SYSTEMS ANALYSIS

ZION/INDIAN POINT PROBABILISTIC RISK ASSESSMENT STUDY REVIEW BOARD MEETING

Prepared for
Commonwealth Edison Company
Chicago, Illinois
June 23, 1980

PICKARD, LOWE AND GARRICK, INC.
CONSULTANTS - NUCLEAR POWER
IRVINE, CALIFORNIA WASHINGTON, D.C.

SYSTEMS ANALYSIS

A. SYSTEM DESCRIPTION

1. SYSTEM FUNCTION (BLOCK DIAGRAM, P&ID)
2. SYSTEM OPERATION
3. INTERFACING SYSTEMS
4. TEST REQUIREMENTS
5. TOP EVENTS

B. LOGIC MODEL

1. FAULT TREE (HARDWARE ONLY)
2. MINIMAL CUT SETS

C. QUANTIFICATION OF SINGLE FAILURES

1. HARDWARE
2. TEST
3. MAINTENANCE
4. HUMAN ERROR
5. OTHER CAUSES

D. <u>QUANTIFICATION OF DOUBLE FAILURES</u>

1. HARDWARE
2. TEST
3. MAINTENANCE
4. HUMAN ERROR
5. OTHER CAUSES
   - I. DESIGN ERROR
   - II. MANUFACTURING ERROR
   - III. ANALYSIS ERROR
   - IV. ENVIRONMENTAL CONDITIONS (TEMPERATURE, MOISTURE, ETC.)

E. <u>QUANTIFICATION OF TRIPLE FAILURES</u>

⋮

ZION LPIS RELIABILITY BLOCK DIAGRAM

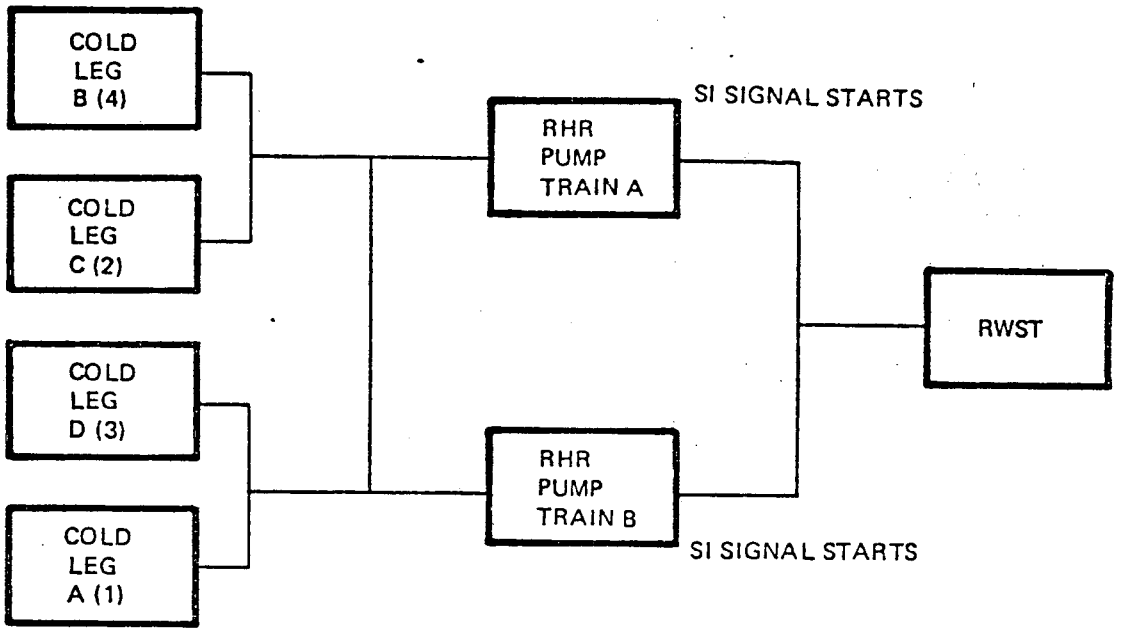

LPIS SIMPLIFIED P&ID

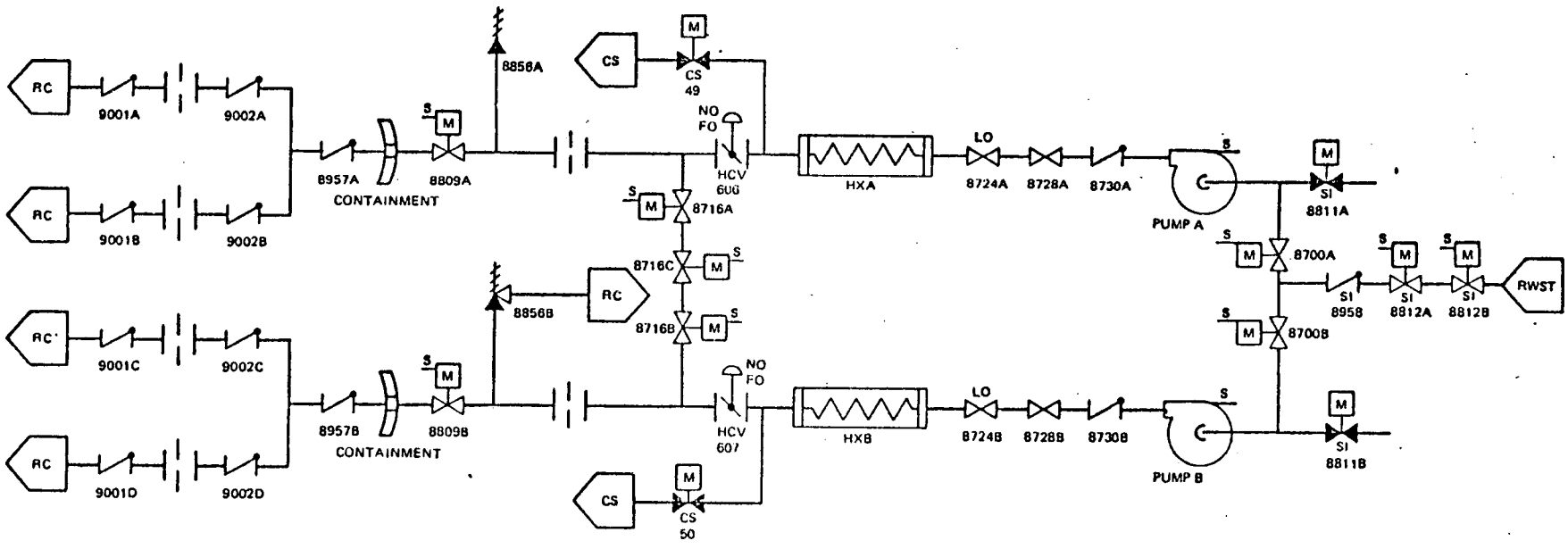

INTERFACING SYSTEMS

SAFEGUARDS ACTUATION SYSTEM

ELECTRIC POWER

LPIS POWER SUPPLIES

COMPONENT	POWER SUPPLY
RHR PUMP A	BUS NUMBER 149
RHR PUMP B	BUS NUMBER 148
MOV 8700A	MCC 1393C
8700B	1383A
8716A	1393A
8716B	1393A
8716C	1383A

TESTING REQUIREMENTS

COMPONENT	TESTING/INSPECTION
RHR PUMP A	STARTED AND STOPPED MONTHLY AND QUARTERLY
RHR PUMP B	STARTED AND STOPPED MONTHLY AND QUARTERLY
MOV CV610, CV611	VERIFY OPEN MONTHLY AND QUARTERLY
MANUAL VALVE 8728A, B	VERIFY LOCKED OPEN DAILY
MANUAL VALVE 8724A, B	VERIFY LOCKED OPEN DAILY
MOV 8809A, B	OPEN AND CLOSE QUARTERLY
MOV 8812A, B	CLOSED AND OPENED QUARTERLY
MOV 8811A, B	CLOSED AND OPENED QUARTERLY
MOV 8700A, B	CLOSED AND OPENED QUARTERLY
MOV 8716A, B, C	CLOSED AND OPENED QUARTERLY

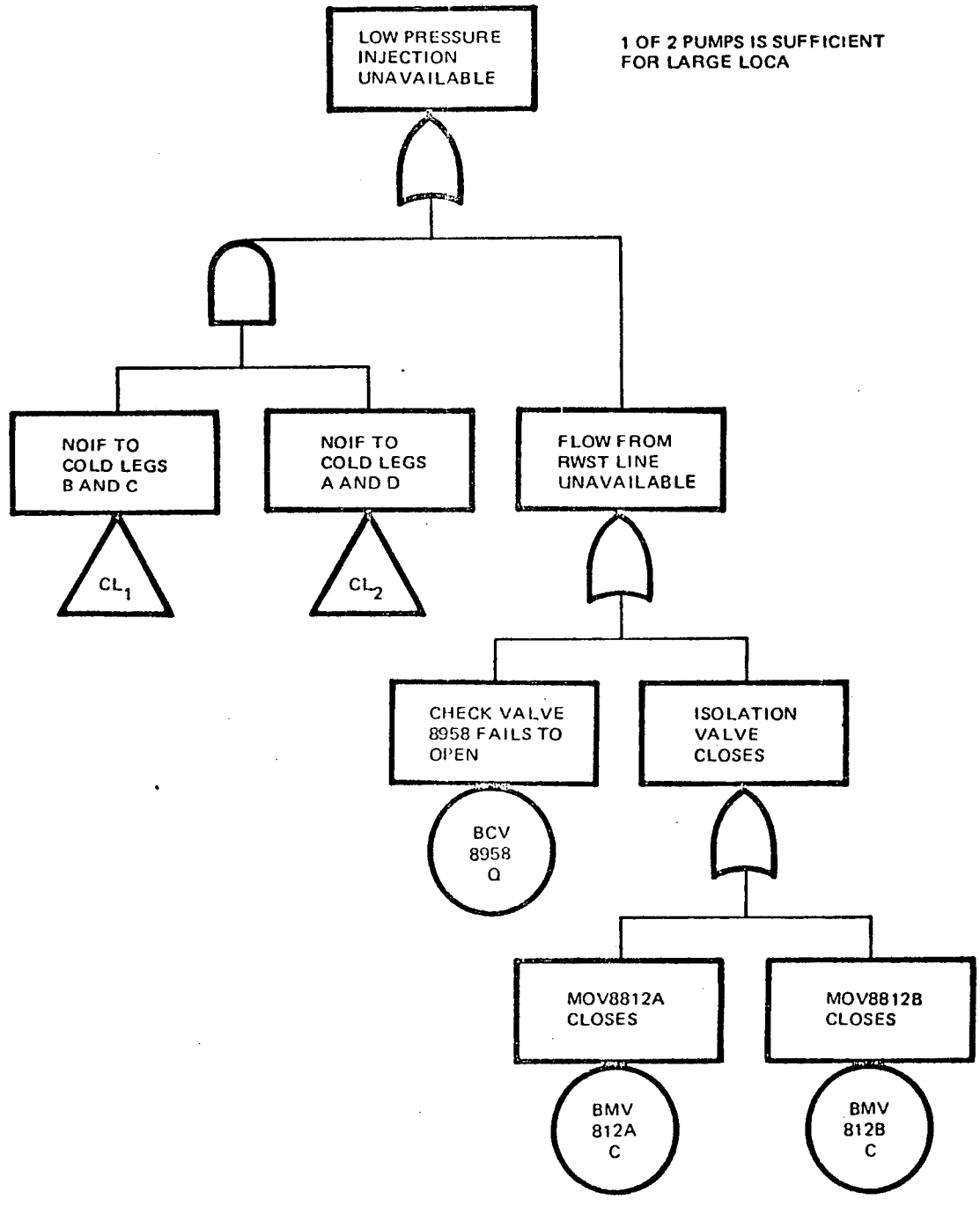
LOW PRESSURE INJECTION UNAVAILABLE
1 OF 2 PUMPS IS SUFFICIENT FOR LARGE LOCA
NOIF TO COLD LEGS B AND C
NOIF TO COLD LEGS A AND D
FLOW FROM RWST LINE UNAVAILABLE
CL1
CL2
CHECK VALVE 8958 FAILS TO OPEN
ISOLATION VALVE CLOSES
BCV 8958 Q
MOV8812A CLOSES
MOV8812B CLOSES
BMV 812A C
BMV 812B C

α	β	γ	$\bar{\gamma}$	Δ	ϵ
1	B,C	A	B	A	B
2	A,D	B	A	C	D

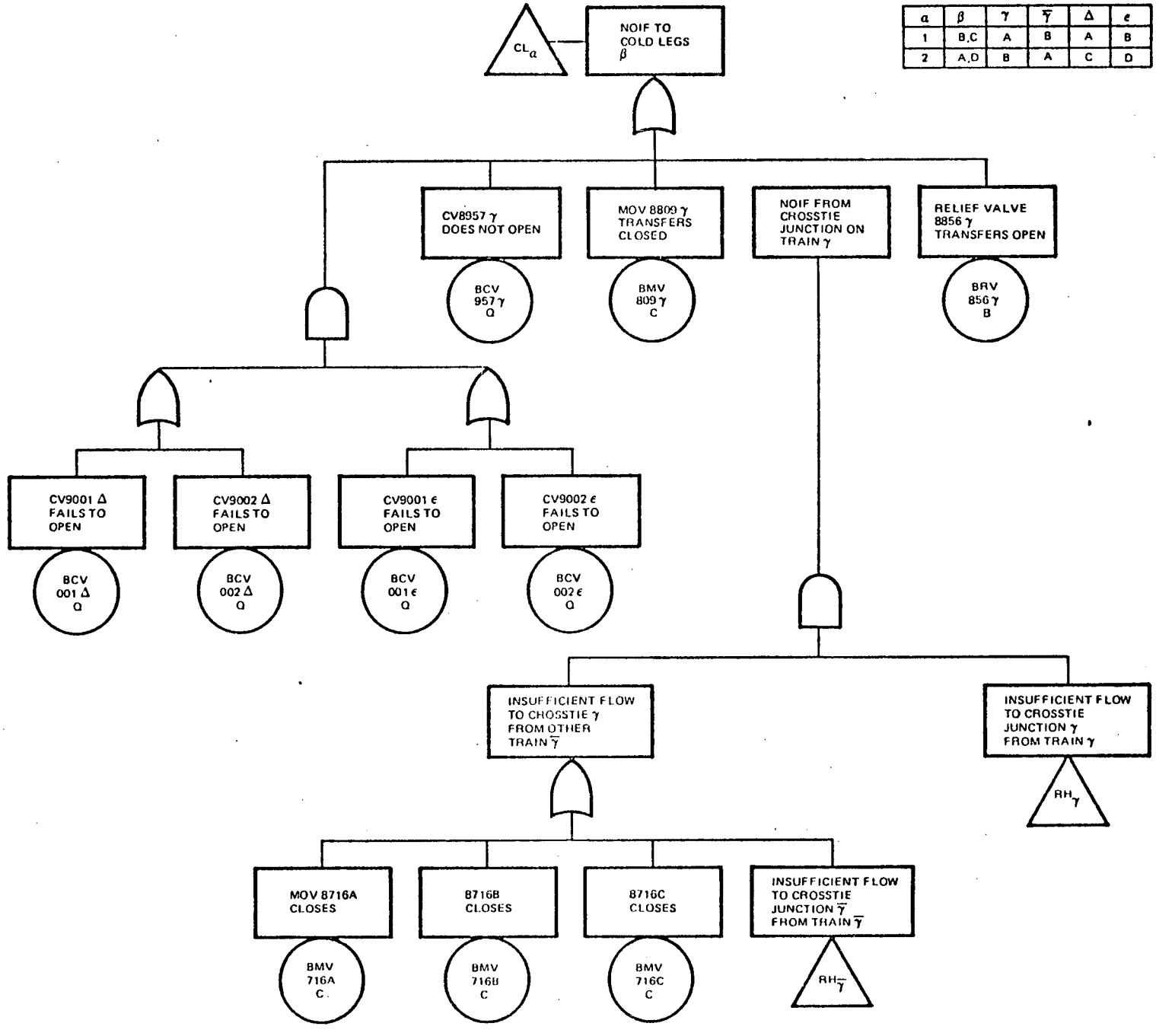

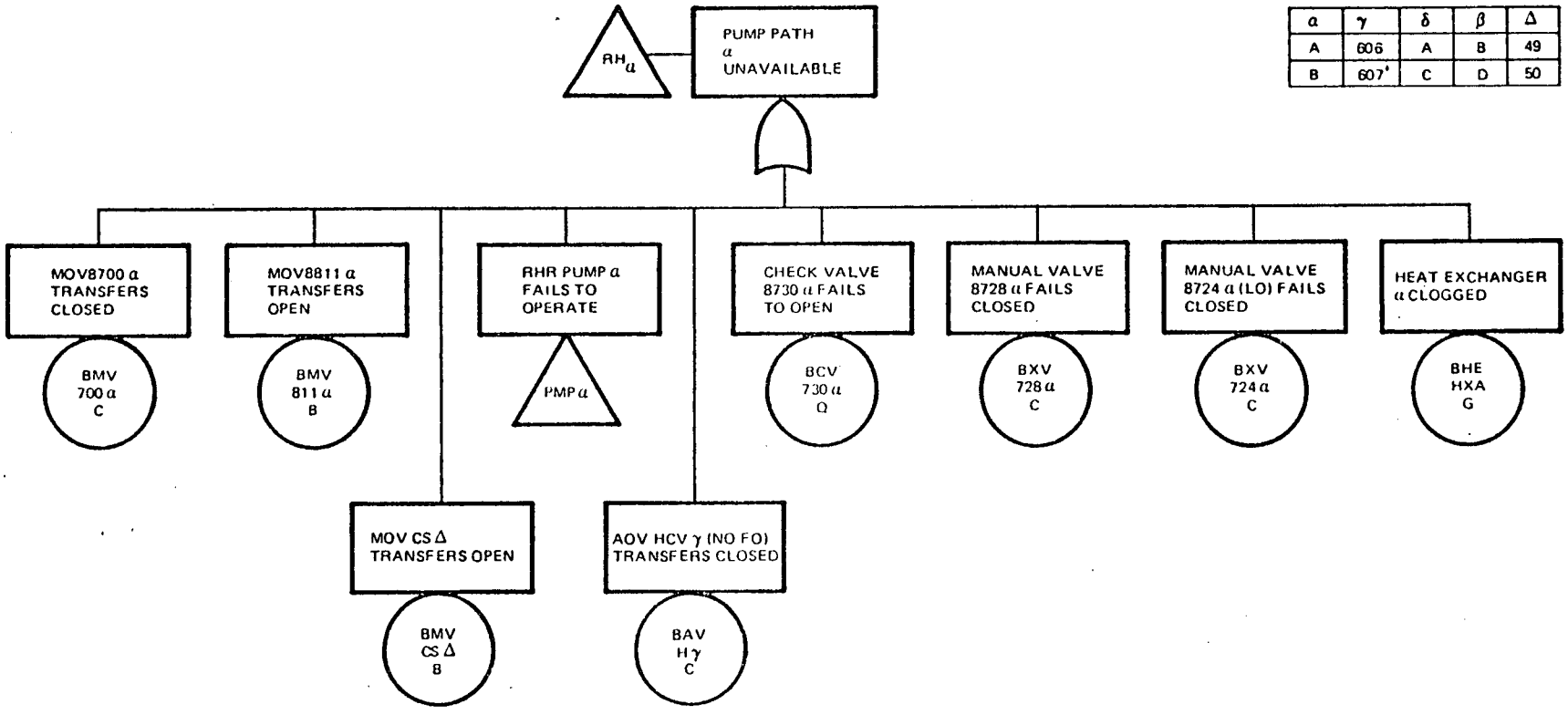

α	γ	δ	β	Δ
A	606	A	B	49
B	607'	C	D	50

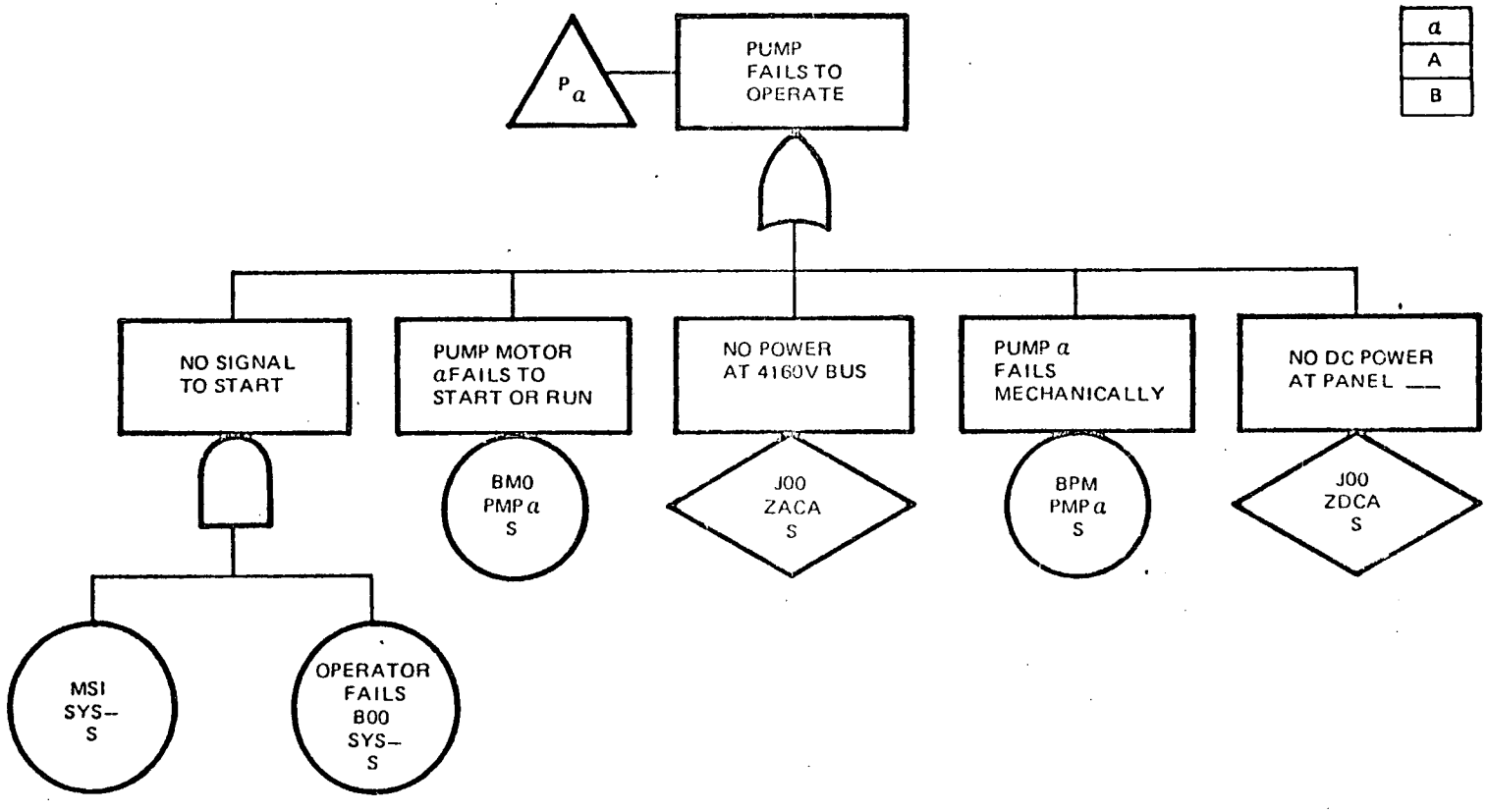
P α
PUMP FAILS TO OPERATE
α
A
B
NO SIGNAL TO START
PUMP MOTOR αFAILS TO START OR RUN
NO POWER AT 4160V BUS
PUMP α FAILS MECHANICALLY
NO DC POWER AT PANEL ___
BM0 PMP α S
J00 ZACA S
BPM PMP α S
J00 ZDCA S
MSI SYS– S
OPERATOR FAILS B00 SYS– S

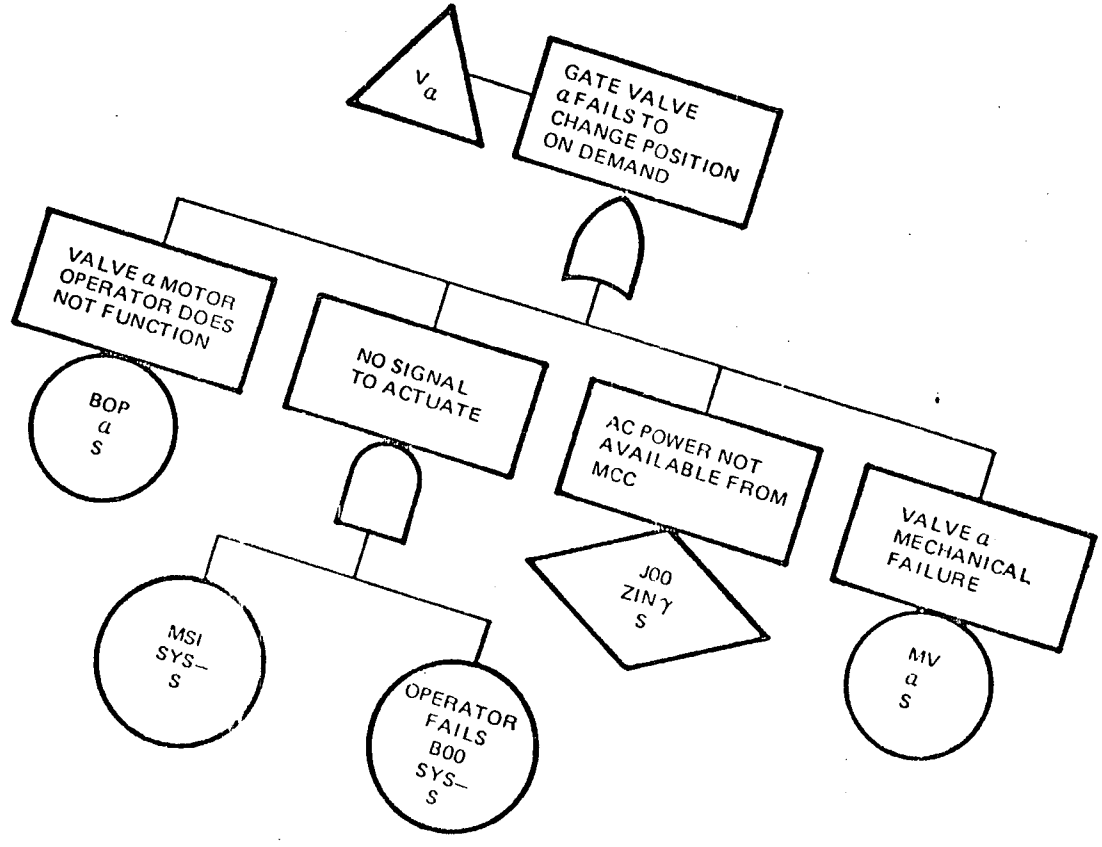
V_a
GATE VALVE α FAILS TO CHANGE POSITION ON DEMAND
VALVE α MOTOR OPERATOR DOES NOT FUNCTION
BOP α S
NO SIGNAL TO ACTUATE
MSI SYS– S
OPERATOR FAILS B00 SYS– S
AC POWER NOT AVAILABLE FROM MCC
J00 ZIN γ S
VALVE α MECHANICAL FAILURE
MV α S

LIST OF COMPONENTS

COMPONENT	FAILURE MODE
CHECK VALVES	
BCV001(A,B,C,D)Q	FAILS TO OPEN
BCV002(A,B,C,D)Q	FAILS TO OPEN
BCV730(A,B)Q	FAILS TO OPEN
BCV957(A,B)Q	FAILS TO OPEN
BCV8958Q	FAILS TO OPEN
MANUAL VALVES	
BXV728(A,B)C	TRANSFERS CLOSED
BXV724(A,B)C	TRANSFERS CLOSED
RELIEF VALVES	
BRV856(A,B)B	TRANSFERS OPEN
MOTOR-OPERATED VALVES	
BMV812(A,B)C	TRANSFERS CLOSED
BMV812(A,B)Q/TEST	DOES NOT OPEN ON DEMAND
BMV700(A,B)C	TRANSFERS CLOSED
BMV716(A,B,C)C	TRANSFERS CLOSED
BMV811(A,B)B	TRANSFERS OPEN
BMVCS49B	TRANSFERS OPEN
BMVCS50B	TRANSFERS OPEN
BMV809(A,B)C	TRANSFERS CLOSED
AIR-OPERATED VALVES	
BAV606AC	TRANSFERS CLOSED
BAV607BC	TRANSFERS CLOSED
HEAT EXCHANGERS	
BHEHXA-G	PLUGGED
BHEHXB-G	PLUGGED

LIST OF COMPONENTS (CONTINUED)

COMPONENT	FAILURE MODE
PUMPS (RHR)	
BPMPMPAS	LOSS OF FUNCTION
BPMPMPBS	LOSS OF FUNCTION
PUMP MOTORS	
BMOPMPAS	LOSS OF FUNCTION
BMOPMPBS	LOSS OF FUNCTION
NONCOMPONENT EVENTS	
SAFETY INJECTION SIGNAL	
MSISYS-S	LOSS OF FUNCTION
POWER TO BUSES	
JOOZACBS	LOSS OF AC ON BUS
OOZDCBS	LOSS OF DC ON BUS
OOZACAS	LOSS OF AC ON BUS
JOOZDCAS	LOSS OF DC ON BUS

PRINTOUT OF MINIMAL CUT SETS FOR PHASE 1

TITLE: [illegible] FOR PRESSURE INJECTION

CUT SETS WITH 1 BASIC EVENTS.

1)	1)	BMV611AC	2)	BMV611BC	3)	BCV09500	

CUT SETS WITH 2 BASIC EVENTS.

1)	2)	BAV606AC	BAV607BC	2)	BAV606AC	BMV55006	3)	BAV606AC	BMV611BB	4)	BAV606AC	BMV700EC	
5)	6)	BAV606AC	BPMPMPB5	6)	BCV73000	BAV606AC	7)	BAV726BC	BAV606AC	8)	BAV724BC	BAV606AC	
9)	10)	BMLHAB-6	BAV606AC	10)	BMV55496	BAV607BC	11)	BMV55496	BMV55503	12)	BMV55496	BMV611CC	
13)	14)	BMV55496	BPV706BC	14)	BMV55496	BPMPMPB5	15)	BCV73000	BMV55496	16)	BXV726BC	BMV55496	
17)	18)	BAV724CC	BPV55496	18)	BMLHAB-6	BMV55496	19)	BMV611AB	BAV607BC	20)	BPV611AB	BMV55CCC	
21)	22)	BMV611AB	BPV611AB	22)	BMV611AB	BMV700CC	23)	BMV611AB	BPMPMPB5	24)	BCV73000	BMV611AB	
25)	26)	BXV726BC	BPV611AB	26)	BAV724BC	BMV611AB	27)	BMLHAB-6	BMV611AB	28)	BPV706AC	BAV607BC	
29)	30)	BMV700EC	BPV706AB	30)	BMV706AC	BMV611BB	31)	BMV706AC	BMV706BC	32)	BPV706AC	BPMPMPB5	
33)	34)	BCV73000	BPV706AC	34)	BXV726BC	BMV706AC	35)	BXV724BC	BMV706AC	36)	BMLHAB-6	BMV706AC	
37)	38)	BPMPMPB5	BAV607BC	38)	BPMPMPB5	BMV55506	39)	BPMPMPB5	BMV611BB	40)	BPMPMPB5	BMV700EC	
41)	42)	BPMPMPB5	BPMPMPB5	42)	BCV73000	BPMPMPB5	43)	BXV726BC	BPMPMPB5	44)	BXV724BC	BPMPMPB5	
45)	46)	BMLHAB-6	BPMPMPB5	46)	BCV73000	BAV607BC	47)	BXV726BC	BAV607BC	48)	BXV724BC	BAV607BC	
49)	50)	BMLHAB-6	BMV55506	50)	BCV73000	BMV55506	51)	BXV726BC	BMV55506	52)	BXV724BC	BMV55CCC	
53)	54)	BMLHAB-6	BPV55506	54)	BCV73000	BMV611BB	55)	BXV726BC	BMV611BB	56)	BXV724BC	BMV611CC	
57)	58)	BMLHAB-6	BPV611AB	58)	BCV73000	BMV706BC	59)	BXV726BC	BMV706BC	60)	BXV724BC	BPV706BC	
61)	62)	BMLHAB-6	BPV706BC	62)	BCV73000	BPMPMPB5	63)	BXV726BC	BPMPMPB5	64)	BXV724BC	BPMPMPB5	
65)	66)	BMLHAB-6	BPMPMPB5	66)	BXV55506	BCV95780	67)	BXV55506	BMV609AC	68)	BXV55CCC	BXV55CAC	
69)	70)	BMV607BC	BCV95780	70)	BMV607BC	BMV609AC	71)	BMV607BC	BXV55CAC	72)	BCV95780	BCV957AC	
73)	74)	BCV95780	BPV607AC	74)	BCV95780	BXV55CAC	75)	BCV73000	BCV730AC	76)	BXV726BC	BCV730AC	
77)	78)	BXV724BC	BCV730AC	78)	BMLHAB-6	BCV730AC	79)	BCV73000	BXV726AC	80)	BXV726BC	BXV726AC	
81)	82)	BXV724BC	BXV726AC	82)	BMLHAB-6	BXV726AC	83)	BCV73000	BXV724AC	84)	BXV726BC	BXV724AC	
85)	86)	BXV724BC	BXV724AC	86)	BMLHAB-6	BXV724AC	87)	BCV73000	BMLHAB-6	88)	BXV726BC	BMLHAB-6	
89)	90)	BXV724BC	BMLHAB-6	90)	BMLHAB-6	BMLHAB-6							

SINGLE FAILURE QUANTIFICATION

1. HARDWARE CONTRIBUTION

CHECK VALVE 8958 FAILS TO OPEN

WASH-1400: $3 \times 10^{-5} - 3 \times 10^{-4}$

$\lambda_{05} = 9.96 \times 10^{-6} - \lambda_{95} = 9.04 \times 10^{-4}$

ZION EVIDENCE

SYSTEMS: RHR, SI, VC, AFW, CS, CC

TESTS:	33/MONTH X 99	=	3,267
	41/QTR X 99/3	=	1,353
	71/YEAR X 99/12	=	568
			5,188 TESTS

FAILURES: 0

DPD: CHECK VALVES

$\lambda_i x10^4$	0.017	0.036	0.076	0.167	0.359	0.777	1.68	3.63	6.99	10.6
p_i	0.005	0.021	0.07	0.165	0.266	0.274	0.158	0.038	0.002	0.001

MEAN $= 0.76 \times 10^{-4}$ (GENERIC $= 2.4 \times 10^{-4}$)

VARIANCE $= 7 \times 10^{-7}$ (GENERIC $= 3.2 \times 10^{-7}$)

- MOV 8812A IS CLOSED

  EVIDENCE: 0 FAILURES IN 8,998 TESTS

  MEAN = 0.58×10^{-4}

  VARIANCE = 0.35×10^{-8}

<u>TOTAL HARDWARE CONTRIBUTION</u>

MEAN = 1.92×10^{-4}

VARIANCE = 7×10^{-9}

2. <u>TEST CALIBRATION</u>

FAILURE MODE: MOV CLOSED FOR TESTING AND FAILS TO OPEN

TEST DURATION: MEAN = 0.863H

VARIANCE = 0.366 H^2

VALVE CLOSED: $\frac{0.863}{3 \times 720} = 4 \times 10^{-4}$

7.84×10^{-14}

VALVE FAILS TO OPEN ON DEMAND.

EVIDENCE: 24 FAILURES IN 9,576 TESTS

MEAN: 2.37×10^{-3}

VARIANCE: 8.7×10^{-7}

<u>TEST CONTRIBUTION</u>: MEAN: 1.9×10^{-6}

VARIANCE: 2.8×10^{-13}

3. <u>HUMAN ERROR CONTRIBUTION</u>

MOVs LEFT CLOSED

HUMAN RELIABILITY HANDBOOK: $10^{-4} - 5 \times 10^{-3}$

MEAN = 1.1×10^{-2}

VARIANCE = 2.6×10^{-2}

POSITION IS DISCOVERED IN 4.075 DAYS (105.8 VAR)

SECOND VALVE LEFT CLOSED

MODERATE DEPENDENCE

$$\frac{1+6 \times 1.1 \times 10^{-2}}{7} = 0.152$$

$$\left(\frac{6}{7}\right)^2 \times 2.6 \times 10^{-2} = 1.9 \times 10^{-2}$$

1. THE FIRST VALVE IS LEFT CLOSED AND THE SECOND IS NOT.

MEAN: $1.1 \times 10^{-2} \times (1 - 0.152) \times \frac{4.075}{90} = 4.19 \times 10^{-4}$

VARIANCE: 2.92×10^{-4}

2. THE FIRST VALVE IS LEFT IN THE RIGHT POSITION BUT THE SECOND IS CLOSED.

MEAN: $(1 - 1.1 \times 10^{-2}) \times 1.1 \times 10^{-2} \times \frac{4.075}{90} = 4.89 \times 10^{-4}$

VARIANCE: 3.93×10^{-4}

3. BOTH VALVES ARE LEFT CLOSED.

MEAN: $1.1 \times 10^{-2} \times 0.152 \times \frac{4.075}{90} = 7.52 \times 10^{-5}$

VARIANCE: 1.65×10^{-5}

<u>TOTAL HUMAN ERROR CONTRIBUTION</u>

MEAN: $4.19 \times 10^{-4} + 4.89 \times 10^{-4} + 7.52 \times 10^{-5} = 9.8 \times 10^{-4}$

VARIANCE: $2.92 \times 10^{-4} + 3.93 \times 10^{-4} + 1.65 \times 10^{-5} = 7 \times 10^{-4}$

TOTAL SINGLE FAILURE CONTRIBUTION

FAILURE MODE	MEAN	VARIANCE
HARDWARE FAILURE	1.92×10^{-4}	7×10^{-9}
TESTING	1.9×10^{-6}	2.8×10^{-13}
HUMAN ERROR	9.8×10^{-4}	7×10^{-4}
TOTAL	1.2×10^{-3}	7×10^{-4}

THE DOMINANT CONTRIBUTOR IS HUMAN ERROR (FAILURE TO OPEN THE VALVES AFTER TESTING), WITH HARDWARE FAILURES RANKED SECOND.

QUANTIFICATION OF DOUBLE FAILURES

1. HARDWARE CONTRIBUTION

   MEAN = 9.1×10^{-6}

   VARIANCE = 4×10^{-11}

   BOTH PUMPS FAIL TO START: 6.8×10^{-6}

   1.6×10^{-11}

2. TEST CONTRIBUTION

   NONE

3. MAINTENANCE CONTRIBUTION

MOV 8700A OR PUMP A UNDER MAINTENANCE.

PUMP: ONCE EVERY 9 TO 18 MONTHS, 24 - 168 HOURS .

UNAVAILABILITY: 8.96×10^{-3}
5.3×10^{-5}

VALVE: ONCE EVERY 2 TO 12 MONTHS, 1 - 168 HOURS

UNAVAILABILITY: 2.1×10^{-2}
1.5×10^{-2}

TRAIN UNAVAILABILITY: 3×10^{-2}
1.5×10^{-2}

HARDWARE FAILURES

BPMPMPBS: PUMP B FAILS TO START

BMV700BC: MOV8700B TRANSFERS CLOSED

BMVCS50B: MOVC550 TRANSFERS CLOSED

BAV607BC: AIR-OPERATED VALVE 607 TRANSFERS CLOSED

BXV724BC: MANUAL VALVE 8724B TRANSFERS CLOSED

BXV728BC: MANUAL VALVE 8728B TRANSFERS CLOSED

BXV730BQ: CHECK VALVE 8730B FAILS TO OPEN

THE HARDWARE CONTRIBUTION FROM THESE MINIMAL CUTSETS IS:

MEAN: 2.97×10^{-3}

VARIANCE: 1.1×10^{-6}

SYSTEM UNAVAILABILITY: 8.9×10^{-5}

1.5×10^{-7}

TOTAL MAINTENANCE CONTRIBUTION

4.3×10^{-4}

9×10^{-7}

4. <u>HUMAN ERROR CONTRIBUTION</u>

MOV 8809A LEFT CLOSED

MEAN TIME BETWEEN MAINTENANCES = 259 DAYS

VALVE LEFT CLOSED AND NOT DETECTED:

$$1.1 \times 10^{-2} \times \frac{4.075}{259} = 1.73 \times 10^{-4}$$

HARDWARE UNAVAILABILITY: 5.2×10^{-7}

TOTAL CONTRIBUTION: $2 \times 5.2 \times 10^{-7} = 10^{-6}$

PARTIAL DOUBLE FAILURE SUMMARY

FAILURE MODE	MEAN	VARIANCE
HARDWARE FAILURE (DOMINATED BY BOTH PUMPS' FAILURES TO START)	9.1×10^{-6}	4×10^{-11}
TESTING	ϵ	ϵ
MAINTENANCE	4.3×10^{-4}	9×10^{-7}
HUMAN ERROR	10^{-6}	----
TOTAL	4.4×10^{-4}	9×10^{-7}

MAINTENANCE DOMINATES.

PARTIAL SYSTEM UNAVAILABILITY

FAILURE MODE	MEAN	VARIANCE
SINGLE FAILURES	1.2×10^{-3}	7×10^{-4}
HARDWARE	1.92×10^{-4}	7×10^{-9}
HUMAN ERROR	9.8×10^{-4}	7×10^{-4}
DOUBLE FAILURES	4.4×10^{-4}	9×10^{-7}
MAINTENANCE	4.3×10^{-4}	9×10^{-7}
TOTAL	1.6×10^{-3}	7×10^{-4}

THE DOMINANT CONTRIBUTOR IS SINGLE FAILURES (HUMAN ERROR).

OTHER CAUSES

SINGLE FAILURES

MOVs 8812A, B CV 8958

DOUBLE FAILURES

MOV 8809A, B: SAME COMPARTMENT

MOV CS49B AND AOV 607B: ADJACENT (VERTICALLY) COMPARTMENTS WITH OPENING

PUMPS A AND B: SEPARATE ROOMS, SOME ELEVATION

TRIPLE FAILURES

NO IDENTIFIED SUSCEPTIBILITIES