SOUTHERN CALIFORNIA
EDISON®
An EDISON INTERNATIONAL® Company

Richard J. St. Onge
Director
Nuclear Regulatory Affairs

May 19, 2010

10CFR50.55a

ATTN: Document Control Desk
U. S. Nuclear Regulatory Commission
Washington, DC 20555-0001

Subject: Docket Nos. 50-361 and 50-362
Third Ten-Year Inservice Inspection (ISI) Interval
Relief Request ISI-3-31, Flaw Evaluation of High-Energy Schedule 10S Emergency Core Cooling System Piping
San Onofre Nuclear Generating Station, Units 2 and 3

Dear Sir or Madam,

Pursuant to 10 CFR 50.55a(a)(3)(ii), Southern California Edison (SCE) requests NRC approval of the following request for the San Onofre Nuclear Generating Station (SONGS) Third Ten-Year Interval Inservice Inspection Program: Use of alternative evaluation criteria for temporary acceptance of flaws in High-Energy Class 2 and 3 Emergency Core Cooling System (ECCS) Schedule 10S piping. The proposed alternative will be identical to the requirements of the American Society of Mechanical Engineers (ASME) Section XI requirements and NRC-approved Code Case N-513-2, "Evaluation Criteria for Temporary Acceptance of Flaws in Moderate Energy Class-2 or 3 Piping ASME Section XI, Division 1," with the exception of the temperature limit of 200°F. In addition, in one case where the operating temperature exceeds 200°F, an exception will also be taken from the limitation to piping of 4 inches or greater nominal pipe size.

SCE has discovered unacceptable flaws in Schedule 10S piping in the ECCS system in both SONGS Units 2 and 3. For the flaws discovered to date, SCE has been able to evaluate flaws in accordance with ASME Code Case N-513-2 or been able to repair the flaws to ASME Code standards during the recently completed Unit 2 Cycle 16 refueling outage.

This proposed alternative is requested as a contingency in case flaws are found in SONGS Units 2 and 3 Schedule 10S ECCS piping in areas where the piping maximum operating temperature limit in Code Case N-513-2 is exceeded or the nominal pipe size is less than 4 inches.

SCE requests expedited review and approval of the Enclosed Relief Request ISI-3-31 in order to avoid a potential unnecessary unit shutdown if a flaw were to

A047
NRR

P.O. Box 128
San Clemente, CA 92674

be discovered in Schedule 10S ECCS piping that could not be evaluated under Code Case N-513-2.

This letter and the enclosure contain no new commitments.

Should you have any questions, please contact Ms. Linda T. Conklin at (949) 368-9443.

Sincerely,

Enclosure: as stated

cc: E. E. Collins, Regional Administrator, NRC Region IV
R. Hall, NRC Project Manager, San Onofre Units 2 and 3
G. G. Warnick, NRC Senior Resident Inspector, San Onofre Units 2 and 3

Enclosure

10 CFR 50.55a Request ISI-3-31
Proposed Alternative in Accordance with 10 CFR 50.55a(a)(3)(ii)
Hardship
Without Compensating Increase in Level of Quality or Safety

10 CFR 50.55a Request ISI-3-31
Proposed Alternative in Accordance with 10 CFR 50.55a(a)(3)(ii)
Hardship
Without Compensating Increase in Level of Quality or Safety

1. ASME Code Component(s) Affected

SONGS Unit 2: Emergency Core Cooling System Class-2 and 3 Schedule 10S Piping and Welds associated with the High Pressure Safety Injection (HPSI) Lines, Low Pressure Safety Injection (LPSI) Lines, and Containment Spray Lines - see Table 1

SONGS Unit 3: Emergency Core Cooling System Class-2 and 3 Schedule 10S Piping and Welds associated with the High Pressure Safety Injection (HPSI) Lines, Low Pressure Safety Injection (LPSI) Lines, and Containment Spray Lines - see Table 1

All piping and welds in each unit that are described below in Table 1 are American Society of Mechanical Engineers (ASME) Boiler and Pressure Vessel Code, Section XI, Class 2, except Rows 12 through 15, Lines 1204ML131, 1204ML151, 1204ML180, and 1204ML080 which are Class 3.

2. Applicable Code Edition and Addenda

Code of Record for Current (Third) Ten-Year In-service Inspection (ISI) Interval, ASME Section XI, 1995 Edition, through the 1996 Addenda

3. Applicable Code Requirement

For Class 2: 1995 Edition through the 1996 Addenda of the ASME Code Section XI, Subparagraph IWC-3122.2 for disposition of flaws found through Volumetric and Surface Examinations and Subparagraph IWC-3132.2 for disposition of flaws found through visual inspections

For Class 3: 1995 Edition through the 1996 Addenda of the ASME Code Section XI, Article IWD-3000.

Note: Article IWD-3000 refers to the rules of IWB-3000. Paragraph IWB-3133 and Subparagraph IWB-3142.3 provide rules for Class 3 components analogous to those in Subparagraphs IWC 3122.2 and IWC-3132.2 for Class 2 components

Table 1
ECCS SCHEDULE 10S PIPING FOR WHICH RELIEF IS REQUESTED
Units 2 and 3

	Line Number	Section Description	Pipe Size (NPS)	Maximum Operating Conditions	
				Temperature (°F)	Pressure (psi)
1	1204ML108/003/ 007/009	Between Valves MU001, MU003, MU007, MU010, and MU062	10	225	110
			16		
			24		
2	1204ML007	Between Valve MU007 & High Pressure Safety Injection Pump P017	8	225	110
3	1204ML009	Between Valves MU010, MU011 & High Pressure Safety Injection Pump P018	8	225	110
4	1204ML003	Between Valves MU003 & HV9303	24	225	110
5	1204ML003	Between Valve HV9303 & Containment Emergency Sump	24	225	110
6	1204ML003	Between Valve MU062 & Containment Spray Pump P012	14*	225	110
			16		
7	1204ML109/004/ 031/008/010	Between Valves MU002, MU004, MU009, MU011, MU005, & MU199	10	225	110
			16		
			24		
8	1204ML008	Between Valve MU009 & High Pressure Safety Injection Pump P019	8	225	110
9	1204ML004	Between Valves MU004 and HV9302	24	225	110
10	1204ML004	Between Valve HV9302 & Containment Emergency Sump	24	225	110
11	1204ML004	Between Valve MU005 & Containment Spray Pump P013	14*	225	110
			16		
12	1204ML131	Between Valve HV9347 & mini flow tie	4	275	50
13	1204ML151	Between Valve HV9306 & mini flow tie	4	275	50
14	1204ML180	Between Valve PSV9308 & mini flow tie	2.5	275	50
15	1204ML080	Between Valves MU060 & MU068	6	275	50

*The 14" sections of these two lines are not Schedule 10S pipe and are excluded from the scope of this relief request.

Note: The scope of the attached calculation M-DSC-445 is broader than that of this relief request. Thus the item numbering of calculation Table 1-1 is different than that listed above because the calculation Table includes additional items.

The maximum operating temperatures listed above were developed during initial plant design and construction. These are not design temperatures and they

contain margin above the maximum operating temperature determined in the analysis of record. See Section 5, "Proposed Alternative and Basis for Use," for more information.

4. Reason for Request

The applicable Code Requirements state that components with relevant conditions must be corrected by repair/replacement activities. Code Case N-513-2, "Evaluation Criteria for Temporary Acceptance of Flaws in Moderate Energy Class 2 or 3 Piping, Section XI, Division 1," has been unconditionally accepted by the NRC for use in evaluating flaws in Regulatory Guide 1.147, Revision 15. Code Case N-513-2 applies to Class 2 or 3 piping whose maximum operating temperature does not exceed 200°F and whose maximum operating pressure does not exceed 275 psig.

SCE has discovered flaws in Schedule 10S piping in ECCS systems in both SONGS Units 2 and 3. For the flaws discovered to date, SCE has been able to evaluate the flaws in accordance with ASME Code Case N-513-2 or was able to repair the flaws to ASME Code standards during the recently completed Unit 2 Cycle 16 refueling outage. All of the affected piping runs meet the definition of moderate energy for maximum operating pressure, 275 psig. However, there are sections of the Schedule 10S ECCS piping where the maximum operating temperature exceeds 200°F, which exceeds the maximum temperature limit specified in Code Case N-513-2. If SCE were to find flaws in these sections of Schedule 10S piping, SCE would not be able to apply Code Case N-513-2 to evaluate flaws.

The ECCS subsystems involved are the High Pressure Safety Injection (HPSI), Low Pressure Safety Injection (LPSI), and Containment Spray. These systems are described in Updated Final Safety Analysis Report (UFSAR) Sections 6.3, 5.4, 7.3, and 7.4 (References 1 through 4) and function to mitigate the effects of Design Basis Accidents, including a Loss of Coolant Accident. Inability to evaluate and accept flaws in these subsystems would result in inoperability of the subsystems such that Technical Specification Required Actions would require initiation of a Unit shutdown in as little as one hour (depending on location of the flaw - in some cases, the applicable TS Required Action would allow 72 hours or 7 days prior to initiation of a plant shutdown).

SCE proposes that the requirements of ASME Code Case N-513-2 may be applied to potential flaws that may be found in Schedule 10S ECCS piping in which the maximum operating temperature exceeds 200°F. By doing so, SCE would likely be able to demonstrate the structural integrity of piping where flaws

are found. Based on the ability to demonstrate structural integrity, a Unit shutdown to repair flaws would result in a hardship without a compensating increase in the level of quality and safety.

ASME Code, Section XI, Article IWD-3000, which applies to ASME Class 3 piping, states that the rules of IWB-3000 may be used because this Article was still in the course of preparation in the Code of Record. This includes IWB-3641(a) which limits the flaw evaluation techniques to piping of NPS 4 inches or greater. In the Emergency Core Cooling System (ECCS) Miniflow line there is a section of pipe that has an NPS of 2.5 inches (see item 14 of Table 1).

SCE proposes that the requirements of ASME Code Case N-513-2 may be conservatively applied to potential flaws that may be found in Schedule 10S ECCS piping with an NPS of 2.5 inches. By doing so, SCE would likely be able to demonstrate the structural integrity of piping where flaws are found. Based on the ability to demonstrate structural integrity, a Unit shutdown to repair flaws would result in a hardship without a compensating increase in the level of quality and safety.

5. Proposed Alternative and Basis for Use

SCE proposes to apply the evaluation methodology, acceptance criteria, and required actions of Code Case N-513-2 to evaluate potential flaws in Schedule 10S ECCS piping to establish pipe integrity, with the exception that the maximum operating temperature for the components in question will be 275°F instead of 200°F, and that in one case the NPS will be 2.5 inches instead of 4 inches or greater.

The allowable through-wall (TW) circumferential flaw lengths for each of the affected piping runs were calculated following the procedures of Code Case N-513-2 and the pipe flaw procedures of ASME Section XI Appendix C for austenitic stainless steel piping (See Calculation M-DSC-445, provided as Attachment 1 of this enclosure). The analytical evaluation methods of Article C-6320 for ductile fracture using elastic-plastic fracture mechanics (EPFM) criteria were used in the determination of allowable TW flaw lengths under upset and faulted loading conditions. The EPFM method is appropriate to account for the possibility of having lower toughness weldments in the austenitic pipe. These welds are classified as flux welds in Appendix C of ASME Section XI, and incorporate either submerged arc weld (SAW) or shielded metal arc weld (SMAW) process. For flaws not associated with butt welds made by SAW or SMAW, such as tungsten inert gas (TIG) welding or wrought pipe, the analytical evaluation methods of Article C-5320 for limit load (LL) failure were used in the determination of allowable TW flaw lengths.

Section IWB-3641(a) limits application of flaw evaluation criteria to austenitic pipe NPS 4 inches or greater. Line 1204ML180 has NPS of 2.5 inches. The flaw evaluation for this line was conservatively performed based on a load multiplier (Z-factor) calculated for a 4-inch NPS pipe. The Z-factor increases with the NPS. Therefore, applying the Z-factor calculated for a 4-inch pipe to a 2.5 inch pipe is conservative.

Specific calculations for allowable TW length, ℓ_{allow}, are based on maximum enveloping stresses obtained from piping stress reviews. For each of the lines listed, the allowable TW lengths were determined and are presented below in Table 2 (circumferential flaws) and Table 3 (axial flaws).

Table 2
Summary of Allowable Circumferential Flaw Length
Results in Schedule 10S ECCS Piping

	Line Number	Section Description	Pipe Size (NPS)	Allowable Flaw Length ℓ_{allow} (inch)	
				SAW and SMAW	TIG and Wrought
1	1204ML108/003/ 007/009	Between Valves MU001, MU003, MU007, MU010 and MU062	10	15.19	18.70
			16	15.97	22.95
			24	24.38	36.47
2	1204ML007	Between Valves MU007 & High Pressure Safety Injection Pump P017	8	12.41	15.53
3	1204ML009	Between Valves MU010, MU011 & High Pressure Safety Injection Pump P018	8	2.94	7.12
4	1204ML003	Between Valves MU003 & HV9303	24	11.17	34.79
5	1204ML003	Between Valves HV9303 & Containment Emergency Sump	24	11.17	34.79
6	1204ML003	Between Valve MU062 & Containment Spray Pump P012	14*	n/a	n/a
			16	15.97	22.95
7	1204ML109/004/ 031/008/010	Between Valves MU002, MU004, MU009, MU011, MU005, & MU199	10	13.03	16.65
			16	19.20	25.53
			24	17.22	33.01
8	1204ML008	Between Valve MU009 & High Pressure Safety Injection Pump P019	8	2.94	7.12
9	1204ML004	Between Valves MU004 and HV9302	24	6.87	21.06
10	1204ML004	Between Valve HV9302 & Containment Emergency Sump	24	6.87	21.06
11	1204ML004	Between Valve MU005 & Containment Spray Pump P013	14*	n/a	n/a
			16	19.20	25.53
12	1204ML131	Between Valve HV9347 & mini flow tie	4	5.88	7.50
13	1204ML151	Between Valve HV9306 & mini flow tie	4	3.68	6.14
14	1204ML180	Between Valve PSV9308 & mini flow tie	2.5	1.65	2.98
15	1204ML080	Between Valves MU060 & MU068	6	2.60	8.49

*The 14" sections of these two lines are not Schedule 10S pipe and are excluded from the scope of this relief request.

Note that the scope of the attached calculation is broader than that of this relief request. Thus the item numbering of calculation Table 2-1 is different than that listed above because the calculation Table includes additional items.

Table 3
Summary of Allowable Axial Through-Wall Lengths
(P_o = 110 psi, T_o = 275°F)

Pipe Size (NPS)	Outside Diameter (inch)	Wall Thickness (inch)	Allowable Flaw Length ℓ_{allow} (inch)
2.5	2.875	0.120	9.16
3	3.5	0.120	8.32
4	4.5	0.120	7.35
6	6.625	0.134	7.14
8	8.625	0.148	7.25
10	10.75	0.165	7.62
14	14.00	0.188	8.08
16	16.00	0.188	7.51
24	24.00	0.250	9.32

Basis for Acceptability of Proposed Alternative

The maximum operating temperatures for the relevant piping lines range from 225°F to 275°F as listed in design documentation. The analysis of record shows that following a Large Break Loss of Coolant Accident (LBLOCA) or Main Steam Line Break, the ECCS piping initially draws water from the Refueling Water Storage Tank (RWST). The maximum RWST temperature is limited to 100°F per Technical Specification SR 3.5.4.1. Prior to depleting the RWST inventory, a Recirculation Actuation Signal (RAS) is generated to initiate ECCS flow from the Containment Emergency Sump (CES) and terminate ECCS flow from the RWST.

The only time that this piping experiences temperatures above 200°F is during post-RAS operation during LBLOCA conditions. The LBLOCA analyses show that the maximum post-RAS temperature in the CES is approximately 215°F with Replacement Steam Generators (RSGs) and approximately 214°F with Original Steam Generators (OSGs). The CES experiences water temperatures above 200°F for approximately 14 hours with RSGs and approximately 11 hours with OSGs. Exposure to CES water provides the basis for the operating temperatures greater than 200°F for the piping in question.

The technical basis for the N-513-2 Code Case is that flaws, once identified, are able to be characterized, the flaw mechanism then understood, and the condition managed during a plant's operating cycle, until repairs are

implemented during the next scheduled outage. SONGS experience to date has been that leaks in Schedule 10S lines have been caused by small flaws. The flaws that have been discovered to date have been as the result of inside diameter and outside diameter stress corrosion cracking or cyclic fatigue failure. These flaws have been smaller than the allowable flaw size evaluated in the technical flaw evaluations for the respective lines, and have not presented a challenge to structural integrity.

The identified piping experiences maximum operating temperatures above 200°F for a very short period of time and only under certain unlikely conditions, and the flaws found to date have been much smaller than the calculated allowable flaw sizes. On that basis, SCE believes that requiring a plant shutdown to effect a Code repair of the affected piping, when compared to the application of Code Case N-513-2, does not provide a compensating increase in the level of quality and safety.

By direct reference, Code Case N-513-2 invokes the analytical evaluation methods of Appendix C for the analysis of planar circumferential flaws. The limit load equations in Appendix C are generally applicable to all pipe sizes. However, the equations for the Z-factors in Appendix C were developed for piping where NPS is greater than or equal to 4 inches, and caution must be used when extrapolating Z-factors to smaller sizes. The Z-factor is a multiplier on applied pipe stress used in the allowable flaw evaluation to account for the possibility of low ductility weldments. The larger the pipe size, the higher the Z-factor becomes; and hence, a lower allowable flaw length will result. The attached calculation applied a Z-factor determined for a 4 inch NPS pipe in the case where the actual NPS was 2.5 inches. This analysis assumption is conservatism in determining the allowable flaw length for the 2.5 inch NPS ECCS piping. Thus, the restriction against using Appendix C methods as referenced by Code Case N-513-2 for flaw evaluation in piping less than 4 inch NPS does not provide a compensating increase in the level of quality and safety under the conditions by which the calculations for allowable flaw length were performed.

Application of the Proposed Alternative

Should SCE discover unacceptable flaws in the sections of Schedule 10S ECCS piping that has maximum operating temperatures greater than 200°F, the application of this proposed alternative will be as follows:

1. Immediate Operability Determination based upon visual characterization of the indication and operating experience with the degradation

mechanisms of this piping (stress corrosion cracking or cyclic fatigue failure).

2. Prompt Operability Determination based on Non-Destructive Examination of flaws and comparison of results to the allowable flaw sizes as described in calculation M-DSC-445.

3. Implementation of follow-up actions as described in Code Case N-513-2.

4. Repair of flaws in accordance with the schedule requirements of Code Case N-513-2.

Long-term corrective action for the degradation of the Schedule 10S ECCS piping is still under development. Possible actions include replacement of Schedule 10S piping, or weld overlay of affected welds or other actions yet to be identified. While specific actions have not yet been determined, it is SCE's intention to actively address the degradation of Schedule 10S piping rather than continuing to evaluate and repair individual flaws on an as-found basis.

6. Duration of Proposed Alternative

The proposed alternative will apply for the duration of the Third 10-year Inspection Interval, which began on August 18, 2003 and will end on August 17, 2013 for both Units 2 and 3.

The duration that SCE would continue to operate Unit 2 or Unit 3 with flaws evaluated and accepted in accordance with this proposed alternative would be in accordance with the requirements of Code Case N-513-2.

7. Precedents

- Letter from G. R. Peterson (McGuire Nuclear Station), to Document Control Desk (NRC), dated July 24, 2007 (ADAMS Accession Number ML072140851); Subject: Duke Power Company LLC d/b/a Duke Energy Carolinas, LLC (Duke), McGuire Nuclear Station, Unit 1, Docket No. 50-369, Relief Request 07-MN-001, Relief Request from Immediate ASME Code Flaw Repair of Charging Pump Discharge Line Valve 1NV-240.

- Letter from Melanie C. Wong (NRC), to Bruce Hamilton (McGuire Nuclear Station) dated March 26, 2008 (ADAMS Accession Number ML080580577); Subject: McGuire Nuclear Station, Unit 1, Request for Relief 06-MN-001, for Third 10-Year Interval Inservice Inspection Program Plan regarding

repair of Chemical Volume and Control System Valve 1NV-240 (TAC No. MD6274)

8. References

1. UFSAR Section 6.3, Emergency Core Cooling System
2. UFSAR Section 5.4, Component and Subsystem Design
3. UFSAR Section 7.3, Engineered Safety Features Systems
4. UFSAR Section 7.4, Systems Required for Safe Shutdown

Attachment 1

Calculation M-DSC-445

Note that the scope of Calculation is broader than that of relief request ISI-3-31. Thus the item numbering of affected lines in the Calculation Tables is different than the numbering in the Relief Request Tables because the Calculation Tables include additional items.

CALCULATION TITLE PAGE

ECN NO./ PRELIM. CCN NO.	PAGE ____ OF ____

Calc. No. M-DSC-445 ECP No. & Rev. N/A

Subject FLAW EVALUATION OF ECCS SCHEDULE 10S PIPING Sheet 1 of 108

System Number/Primary Station System Designator 1204 / BHA & 1219 / BHB SONGS Unit 2 & 3 Q-Class II

Tech. Spec./LCS Affecting? ☒NO ☐ YES, Section No. ____ Equipment Tag No. SEE BELOW

Site Programs/Procedure Impact? ☒ NO ☐ YES, AR No. ____

10CFR50.59/72.48 REVIEW	CONTROLLED COMPUTER PROGRAM / DATABASE		
IS THIS CALCULATION REVISION BEING ISSUED SOLELY TO INCORPORATE CCNs/ECNs? ☒ NO ☐ YES AR No. SEE BELOW*	☐ PROGRAM ☐ DATABASE ACCORDING TO SO123-XXIV-5.1	PROGRAM / DATABASE NAME(S) ☐ ALSO, LISTED BELOW N/A	VERSION / RELEASE NO.(S) N/A

RECORDS OF ISSUES

REV. / DISC.	DESCRIPTION	TOTAL SHTS. / LAST SHT.	PREPARED BY: (Print name/sign/date) Initial PQS Block - Requires PQS T3EN64	APPROVED BY: (Signature/date) Initial PQS Block - Requires PQS T3EN64
0	INITIAL ISSUE	108	ORIG. N. M. EL-AKILY PQS VER. BY: nme Nabil M. El-Akily 5/19/10	FLS RIYAD QASHU PQS VER. BY: RQ 5/19/2010
		108	IRE DAVID ORTIZ PQS VER. BY: DO David Ortiz 5/19/10	Other
			ORIG. PQS VER. BY: ____	FLS PQS VER. BY: ____
			IRE PQS VER. BY: ____	Other
			ORIG. PQS VER. BY: ____	FLS PQS VER. BY: ____
			IRE PQS VER. BY: ____	Other
			ORIG. PQS VER. BY: ____	FLS PQS VER. BY: ____
			IRE PQS VER. BY: ____	Other

Space for RPE Stamp, identify use of an alternate calc., and notes as applicable.

* THIS CALCULATION DOES NOT SUPPORT ANY CHANGE / MODIFICATION TO THE PLANT. NO 10CFR50.59 REVIEW IS REQUIRED.

Equipment tag numbers:

- LINES 1204ML001, 002, 003, 004, 007, 008, 009, 010, 031, 080, 108, 131, 151 and 180
- LINES 1219ML057, 066, 068, 072, 073 and 107

POOR QUALITY DOCUMENT
BEST AVAILABLE COPY

SIGNED: N. El-Akily 5/19/10
DOCUMENT ORIGINATOR DATE

This calc. was prepared for the identified ECP. ECP completion and turnover acceptance to be verified by receipt of ECP Turnover/Closure form directing conversion. Upon receipt, this calc. represents the as-built condition. ECP Turnover/Closure form date ____ by ____.

CALCULATION CROSS-INDEX

ECN NO./ PRELIM. CCN NO.	PAGE _____ OF _____
	CCN CONVERSION: CCN NO. **CCN--**

Calculation No. M-DSC-445

Sheet 2 of 108

Calc. rev. number and responsible FLS initials and date	INPUTS These interfacing calculations and/or documents provide input to the subject calculation, and if revised may require revision of the subject calculation.		OUTPUTS Results and conclusion of the subject calculation are used in these interfacing calculations and/or documents.		Does the output interface calc/document require Change?	Identify output interface calc/document CCN, ECP, TCN/Rev., or tracking number.
	Calc/Document No.	**Rev. No.**	**Calc/Document No.**	**Rev. No.**	**YES / NO**	
0 RY 5/17/10	Calculation M-1204-003-02A, Suction Side of Safety Injection Pumps	8				
	Calculation M-1204-003-03A, Suction Side of Safety Injection Pumps	5				
	Calculation M-1204-003-AA, Penetration 55 Containment Emergency Sump Recirculation	7				
	Calculation M-1204-008-02A, HPSI Pump – Temporary Piping for ISI Testing	0				
	Calculation M-1204-002-02A, Safety Injection Lines from P-13, P-16, P-18 and P-19 to T-6	9				
	Calculation M-1204-002-03A, Suction Side of Safety Injection System	5				

CALCULATION CROSS-INDEX

ECN NO./ PRELIM. CCN NO.	PAGE ____ OF ____
	CCN CONVERSION: CCN NO. **CCN--**

Calculation No. M-DSC-445

Sheet 3 of 108

Calc. rev. number and responsible FLS initials and date	INPUTS These interfacing calculations and/or documents provide input to the subject calculation, and if revised may require revision of the subject calculation.		OUTPUTS Results and conclusion of the subject calculation are used in these interfacing calculations and/or documents.		Does the output interface calc/document require Change?	Identify output interface calc/document CCN, ECP, TCN/Rev., or tracking number.
	Calc/Document No.	**Rev. No.**	**Calc/Document No.**	**Rev. No.**	**YES / NO**	
0 RCY 5/19/10	Calculation M-1204-004-AA, Penetration 54 Containment Emergency Sump Recirculation	9				
	Calculation M-1219-072-AA, Refueling Water Storage Tank T-006 3" Drain 1219-072-3"-C-LL0	3				
	Calculation M-1219-068-AA, Refueling Water Storage Tank Crosstie Tank T-005 and T-006	3				
	Calculation M-1204-151-AA, Mini-flow from & to HPSI LPSI Pumps in SEB	8				
	Calculation M-1204-080-AA, Line 079 to Line 107 and to Refueling Water Storage Tank T-005	5				
	Calculation M-1219-057-02A, Line 057 from Refueling Water Storage Tank T-006 P02449-2453	6				

CALCULATION CROSS-INDEX

ECN NO./ PRELIM. CCN NO.	PAGE _____ OF _____
	CCN CONVERSION: CCN NO. **CCN--**

Calculation No. M-DSC-445

Sheet 4 of 108

Calc. rev. number and responsible FLS initials and date	INPUTS These interfacing calculations and/or documents provide input to the subject calculation, and if revised may require revision of the subject calculation.		OUTPUTS Results and conclusion of the subject calculation are used in these interfacing calculations and/or documents.		Does the output interface calc/document require Change?	Identify output interface calc/document CCN, ECP, TCN/Rev., or tracking number.
	Calc/Document No.	**Rev. No.**	**Calc/Document No.**	**Rev. No.**	**YES / NO**	
0 RU 5/4/10	Calculation M-1219-057-AA, Refueling Water Tank to Charging Pumps Line NO 1219-057	4				
	Calculation M-1219-057-04A, Refuel Water Tank to Charging Pumps – Unit 2	5				
	Calculation M-1208-007-02A, AUX BLDG Acid Pump (Suction)	7				
	Calculation M-1218-037-02A, Boric Acid Make-up Pump Disch to Vol Control Tank Charging Pump+Suction Header -Unit 2	2				
	Calculation M-1219-057-03A, Refueling Water Tank to Charging Pumps	7				
	Calculation M-1208-007-03A, Volume Control Tank TO77 to Charging Pump Suction	5				

CALCULATION CROSS-INDEX

ECN NO./ PRELIM. CCN NO.	PAGE ____ OF ____
	CCN CONVERSION: CCN NO. **CCN--**

Calculation No. M-DSC-445

Sheet 5 of 108

Calc. rev. number and responsible FLS initials and date	INPUTS These interfacing calculations and/or documents provide input to the subject calculation, and if revised may require revision of the subject calculation.		OUTPUTS Results and conclusion of the subject calculation are used in these interfacing calculations and/or documents.		Does the output interface calc/document require Change?	Identify output interface calc/document CCN, ECP, TCN/Rev., or tracking number.
	Calc/Document No.	**Rev. No.**	**Calc/Document No.**	**Rev. No.**	**YES / NO**	
0 RU 5/19/10	Calculation M-1218-037-03A, Boric Acid Make-up Pump Disch to Vol Control Tank Charging Pump+Suction Header	3				
	Calculation M-1219-066-AA, P-011 + Refueling Water Storage Tank T-006 to Spent Fuel Pool Make Pump	3				
	P&ID 40112A, Safety Injection System – System No. 1204 P&ID 40112ASO3, Safety Injection System – System No. 1204	35 38				

CALCULATION CROSS-INDEX

ECN NO./ PRELIM. CCN NO.	PAGE _____ OF _____
	CCN CONVERSION: CCN NO. **CCN--**

Calculation No: M-DSC-445

Sheet 6 of 108

Calc. rev. number and responsible FLS initials and date	INPUTS These interfacing calculations and/or documents provide input to the subject calculation, and if revised may require revision of the subject calculation.		OUTPUTS Results and conclusion of the subject calculation are used in these interfacing calculations and/or documents.		Does the output interface calc/document require Change?	Identify output interface calc/document CCN, ECP, TCN/Rev., or tracking number.
	Calc/Document No.	**Rev. No.**	**Calc/Document No.**	**Rev. No.**	**YES / NO**	
0 RL 5/19/10	P&ID 40122B, Fuel Pool Cooling System – System No. 1219	26				
	P&ID 40122BSO3, Fuel Pool Cooling System – System No. 1219	21				
	P&ID 40112B, Safety Injection System – System No. 1204	36				
	P&ID 40112BSO3, Safety Injection System – System No. 1204	37				
	P&ID 40114A, Containment Spray System – System No. 1206	15				
	P&ID 40114ASO3, Containment Spray System – System No. 1206	15				

CALCULATION CROSS-INDEX

ECN NO./ PRELIM. CCN NO.	PAGE ____ OF ____
	CCN CONVERSION: CCN NO. **CCN--**

Calculation No. M-DSC-445

Sheet 7 of 108

Calc. rev. number and responsible FLS Initials and date	INPUTS These interfacing calculations and/or documents provide input to the subject calculation, and if revised may require revision of the subject calculation.		OUTPUTS Results and conclusion of the subject calculation are used in these interfacing calculations and/or documents.		Does the output interface calc/document require Change?	Identify output interface calc/document CCN, ECP, TCN/Rev., or tracking number.
	Calc/Document No.	**Rev. No.**	**Calc/Document No.**	**Rev. No.**	**YES / NO**	
0 Rel 5/10/10	P&ID 40114D, Containment Spray System – System No. 1206 P&ID 40114DSO3, Containment Spray System – System No. 1206	20 19				

CALCULATION COVER SHEET

Calculation No.: AES-C-7384-2

Client: Southern California Edison

Title: Allowable Through-Wall Flaws in ECCS Schedule 10s Piping at SONGS Units 2 & 3

Project No.: AES-10027384-2Q

APTECH Office: Sunnyvale

Page No. 1 of 101

☐ **Uncontrolled** ☒ **Controlled**

Document Control No.: I-2

Purpose: The purpose of this calculation is to determine the allowable through-wall flaw lengths for the emergency core cooling system (ECCS) piping in a generic evaluation for pipe sizes ranging from 2.5 NPS to 24 NPS. The methods of ASME Section XI Code Case N-513-2 are used in this calculation.

Assumptions: The major assumptions are given in Section 3 of this calculation.

Results: The calculated allowable through-wall flaw lengths for the Schedule 10s piping covered by this calculation are summarized in Section 2. The specific calculations are given in Section 8.0. Results for bounding stresses for the range in pipe sizes in the affected subsystems are given in Appendix A.

Revision No.	Prepared By / Date	Checked By / Date	Verified By / Date	Approved By / Date	Revision Description
0	RCL / 5/17/10	CQL / 5/17/10	CQL / 5/17/10	RCL / 5/17/10	Initial Release

APTECH ENGINEERING ◘ SCIENCE ◘ TECHNOLOGY

APTECH
ENGINEERING ◘ SCIENCE ◘ TECHNOLOGY

Calculation No.: AES-C-7384-2	Made by: RCC	Date: 5/14/10	Client: SCE
Title: Allowable Through-Wall Flaws in ECCS Schedule 10s Piping at SONGS Units 2 & 3	Checked by: CQL	Date: 5/14/10	Project No.: AES-10027384-2Q
	Revision No.: 0	Document Control No.: I-2	Page No.: 2 of 101

TABLE OF CONTENTS

Section	Title	Page
1.0	INTRODUCTION	4
2.0	SUMMARY	6
2.1	Allowable Circumferential Flaw Lengths	6
2.2	Allowable Axial Flaw Lengths	9
3.0	ASSUMPTIONS	10
4.0	DESIGN INPUT	11
4.1	Piping Geometry	11
4.2	Materials of Construction	12
4.3	Design and Operating Conditions	12
4.4	Design Stress Data	14
5.0	ANALYSIS METHOD	15
5.1	Ductile Fracture Evaluation	15
5.1.1	Combined Stress	15
5.1.2	Membrane Stress	18
5.1.3	Acceptance Criteria	19
5.2	Limit Load Evaluation	19
5.3	Piping Stresses	20
5.4	Flow Stress	22
5.5	Consideration for Axial Flaws	22
6.0	REFERENCES	24
7.0	NOMENCLATURE	26
8.0	CALCULATIONS	28
8.1	Evaluation Overview	28
8.2	Allowable Effective Bending Stress	28
8.3	Allowable Circumferential Flaw Lengths	33
8.4	Allowable Axial Flaw Lengths	33

APTECH
ENGINEERING ⊠ SCIENCE ⊠ TECHNOLOGY

Calculation No.: AES-C-7384-2	Made by: RCC	Date: 5/14/10	Client: SCE
Title: Allowable Through-Wall Flaws in ECCS Schedule 10s Piping at SONGS Units 2 & 3	Checked by: CQL	Date: 5/14/10	Project No.: AES-10027384-2Q
	Revision No.: 0	Document Control No.: I-2	Page No.: 3 of 101

TABLE OF CONTENTS (Cont'd)

Section	Title	Page
Appendices		
Appendix A	Evaluation for Allowable Flaw Lengths for ECCS Schedule 10s Piping	34
Appendix B	ECCS Schedule 10s Process and Instrumentation Diagrams	88

1.0 INTRODUCTION

The purpose of this calculation is to determine the stress conditions and through-wall lengths for acceptance of flaws detected in the emergency core cooling system (ECCS) Schedule 10s piping. Calculations for allowable through-wall (TW) flaw lengths for axial and circumferential flaws are provided. The scope of this calculation covers 2.5 nominal pipe size (NPS) through 24 NPS in selected ECCS piping that are either defined as moderate or high energy. This calculation covers both Units 2 and 3.

The flaw evaluation follows the requirements for Code Case N-513-2 (Ref. 1). Temporary acceptance of flaws, including TW leaking flaws, falls within the scope of N-513-2 and covers moderate energy Class 2 and 3 piping systems. Moderate energy piping is defined as pipe having a maximum operating temperature of 200°F and a maximum operating pressure of 275 psi. Therefore, for those portions of the ECCS piping that satisfy the moderate energy definition, meeting N-513-2 satisfies the Code requirements. For portions of the piping that are outside the moderate energy category, N-513-2 is used herein as guidance in establishing pipe integrity subject to the regulatory review and approval. The specific subsystems and lines that have been identified as high energy, and are evaluated herein, are listed in Table 1-1 (Ref. 2). These lines meet the definition of moderate energy for maximum operating pressure, but operate at temperatures higher than 200°F.

The acceptance criteria for TW flaws per the requirements of N-513-2 are those specified in Article C-2620 of ASME Section XI, Appendix C (Ref. 3). The circumferential flaws are evaluated as planar cracks following the flaw evaluation procedures of C-6320 for elastic plastic failure mode, and C-5320 for limit load failure mode, as appropriate. For axial flaws, N-513-2 provides the analytical method for calculating the allowable TW flaw lengths.

APTECH
ENGINEERING ◘ SCIENCE ◘ TECHNOLOGY

Calculation No.: AES-C-7384-2	Made by: RCC	Date: 5/14/10	Client: SCE
Title: Allowable Through-Wall Flaws in ECCS Schedule 10s Piping at SONGS Units 2 & 3	Checked by: CQL	Date: 5/14/10	Project No.: AES-10027384-2Q
	Revision No.: 0	Document Control No.: I-2	Page No.: 5 of 101

Table 1-1
Summary of Schedule 10s Piping

	System	Subsystem	Line	Section Description	Pipe Sizes (NPS)	High Energy Line	Material Spec [Note 1]
1	ECCS	RWST	1204ML001	Between T005 and HV9300	24	No	SA-358
2	ECCS	ALL TRAIN A	1204ML001	Between HV9300 and MU001	24	No	
3	ECCS	ALL TRAIN A	1204ML108/003/ 007/009	Bounded by Valves MU001, MU003, MU007, MU010, and MU062	24/10/16	Yes	
4	ECCS	HPSI TRAIN A	1204ML007	Between MU007 and P017	8	Yes	SA-376
5	ECCS	HPSI COMMON	1204ML009	Between MU010, MU011 and P018	8	Yes	
6	ECCS	ALL TRAIN A	1204ML003	Between MU003 and HV9303	24	Yes	SA-358
7	ECCS	ALL TRAIN A	1204ML003	Between HV9303 and Emergency Sump	24	Yes	
8	ECCS	LPSI TRAIN A	1204ML032	Between "T" of Line ML003 and P015 [Note 2]	14	Yes(2)	SA-358
9	ECCS	CS TRAIN A	1204ML003	Between MU062 and P012	16/14	Yes	SA-358
10	ECCS	RWST	1219ML073	Between T005 and MU075	3	No	SA-376
11	ECCS	RWST	1204ML002	Between T006 and HV9301	24	No	SA-358
12	ECCS	ALL TRAIN B	1204ML002	Between HV9301 and MU002	24	No	
13	ECCS	ALL TRAIN B	1204ML109/004/ 031/008/010	Bounded by Valves MU002, MU004, MU009, MU011, MU005, & MU199	24/10/16	Yes	SA-358 SA-376
14	ECCS	HPSI TRAIN B	1204ML008	Between MU009 and P019	8	Yes	SA-376
15	ECCS	ALL TRAIN B	1204ML004	Between MU004 and HV9302	24	Yes	SA-358 or SA 312
16	ECCS	ALL TRAIN B	1204ML004	Between HV9302 and Emergency Sump	24	Yes	
17	ECCS	LPSI TRAIN B	1204ML033	Between MU199 and P016 [Note 2]	14	Yes(2)	-
18	ECCS	CS TRAIN B	1204ML004	Between MU005 and P013	16/14	Yes	SA-358 or SA-312
19	ECCS	RWST	1219ML072	Between T006 and MU074	3	No	SA-376
20	ECCS	RWST	1219ML068	RWST Crosstie	24	No	SA-358
21	ECCS	MINIFLOW	1204ML131	Between HV9347 and mini flow tie	4	Yes	SA-376
22	ECCS	MINIFLOW	1204ML151	Between HV9306 and mini flow tie	4	Yes	
23	ECCS	MINIFLOW	1204ML180	Between PSV9308 and mini flow tie	2.5	Yes	
24	ECCS	MINIFLOW	1204ML080	Between Valves MU060 & MU068	6	Yes	
25	ECCS	MINIFLOW	1219ML107	Between Valves MU068 and T005	10	No	
26	CVCS	RWST	1219ML057	Between T006 and MU067 (gravity feed to charging)	6	No	
27	SFP	RWST	1219ML066	Between T006 and MU070 (to SFP make up pump)	4/3	No	SA-376 or SA-312

Note 1 - Material specifications are SA-358 T304 Class 1, SA-376 TP304, and SA-312 T304.
Note 2 - These lines are Schedule 20 and are not evaluated.

2.0 SUMMARY

The allowable TW flaw lengths were calculated following the procedures of Code Case N-513-2 and the pipe flaw procedures of ASME Section XI Appendix C for austenitic stainless steel piping. Allowable circumferential flaws were determined from the procedures of Article C-5320 and C-6320 of Appendix C for limit load and elastic plastic failure mechanisms. Allowable axial flaws were determined for limit load failure mode following the procedures of C-5420 as amended by N-513-2. Flaw acceptance criteria of C-2620 were used to establish the allowable TW lengths.

2.1 Allowable Circumferential Flaw Lengths

The analytical evaluation methods of Article C-6320 for ductile fracture using elastic-plastic fracture mechanics (EPFM) criteria were used in the determination of allowable TW flaw lengths under upset and faulted loading conditions. The EPFM method is appropriate to account for the possibility of having lower toughness weldments in the austenitic pipe. These welds are classified as flux welds in Appendix C of ASME Section XI, and incorporate either sub-merged arc weld (SAW) or shielded metal arc weld (SMAW) process. For flaws not associated with butt welds made by SAW or SMAW, such as tungsten inert gas (TIG) welding or wrought pipe, the analytical evaluation methods of Article C-5320 for limit load (LL) failure were used in the determination of allowable TW flaw lengths.

The detailed results from these calculations are given in Section 8. Section 8.2 provides graphical results for allowable stresses as a function of TW flaw length for direct comparison with NDE results from field examinations. These plots are given in Figures 8-1 and 8-2.

Specific calculations for allowable TW length, ℓ_{allow}, are discussed in Section 8.3. These calculations are based on maximum enveloping stresses obtained from piping stress reviews (see appendices). For each of the 27 subsystems listed for the ECCS, the allowable TW lengths were determined. Summary of the allowable length calculations by pipe size is given in Appendix A. Process and instrumentation diagrams are given in Appendix B.

The summary table of allowable sizes is given in Table 2-1.

APTECH
ENGINEERING & SCIENCE & TECHNOLOGY

Calculation No.: AES-C-7384-2	Made by: RCC	Date: 5/14/10	Client: SCE
Title: Allowable Through-Wall Flaws in ECCS Schedule 10s Piping at SONGS Units 2 & 3	Checked by: CQL	Date: 5/14/10	Project No.: AES-10027384-2Q
	Revision No.: 0	Document Control No.: I-2	Page No.: 7 of 101

Table 2-1
Summary of Allowable Circumferential Flaw Length Results

	Subsystem	Line	Section Description	Pipe Size (NPS)	High Energy Line	Allowable Flaw Length ℓ_{allow} (in) SAW and SMAW	TIG and Wrought
1	RWST	1204ML001	Between T005 and HV9300	24	No	8.83	36.9
2	ALL TRAIN A	1204ML001	Between HV9300 and MU001	24	No	8.83	36.9
3	ALL TRAIN A	1204ML108/003 /007/009	Bounded by Valves MU001, MU003, MU007, MU010, and MU062	10	Yes	15.19	18.70
				16	Yes	15.97	22.95
				24	Yes	24.38	36.47
4	HPSI TRAIN A	1204ML007	Between MU007 and P017	8	Yes	12.41	15.53
5	HPSI COMMON	1204ML009	Between MU010, MU011 and P018	8	Yes	2.94	7.12
6	ALL TRAIN A	1204ML003	Between MU003 and HV9303	24	Yes	11.17	34.79
7	ALL TRAIN A	1204ML003	Between HV9303 and Emergency Sump	24	Yes	11.17	34.79
8	LPSI TRAIN A	1204ML032	Between "T" of Line ML003 and P015	14	Yes	Not evaluated [Note 1]	
9	CS TRAIN A	1204ML003	Between MU062 and P012	14	Yes	[Note 2]	[Note 2]
				16	Yes	15.97	22.95
10	RWST	1219ML073	Between T005 and MU075	3	No	7.89	8.36
11	RWST	1204ML002	Between T006 and HV9301	24	No	17.22	33.01
12	ALL TRAIN B	1204ML002	Between HV9301 and MU002	24	No	17.22	33.01
13	ALL TRAIN B	1204ML109/004/ 031/008/010	Bounded by Valves MU002, MU004, MU009, MU011, MU005, and MU199	10	Yes	13.03	16.65
				16	Yes	19.20	25.53
				24	Yes	17.22	33.01
14	HPSI TRAIN B	1204ML008	Between MU009 and P019	8	Yes	2.94	7.12
15	ALL TRAIN B	1204ML004	Between MU004 and HV9302	24	Yes	6.87	21.06
16	ALL TRAIN B	1204ML004	Between HV9302 and Emergency Sump	24	Yes	6.87	21.06
17	LPSI TRAIN B	1204ML033	Between MU199 & P016	14	Yes	Not evaluated [Note 1]	
18	CS TRAIN B	1204ML004	Between MU005 and P013	14	Yes	[Note 2]	[Note 2]
				16	Yes	19.20	25.53
19	RWST	1219ML072	Between T006 and MU074	3	No	7.91	8.37

APTECH
ENGINEERING ⊠ SCIENCE ⊠ TECHNOLOGY

Calculation No.: AES-C-7384-2	Made by: RCC	Date: 5/14/10	Client: SCE
Title: Allowable Through-Wall Flaws in ECCS Schedule 10s Piping at SONGS Units 2 & 3	Checked by: CQL	Date: 5/14/10	Project No.: AES-10027384-2Q
	Revision No.: 0	Document Control No.: I-2	Page No.: 8 of 101

Table 2-1
Summary of Allowable Circumferential Flaw Length Results (Cont'd)

	Subsystem	Line	Section Description	Pipe Size (NPS)	High Energy Line	Allowable Flaw Length ℓ_{allow} (in) SAW and SMAW	Allowable Flaw Length ℓ_{allow} (in) TIG and Wrought	Appendix Section
20	RWST	1219ML068	RWST Crosstie	24	No	41.38	50.79	A.11
21	MINIFLOW	1204ML131	Between HV9347 and mini flow tie	4	Yes	5.88	7.50	A.12
22	MINIFLOW	1204ML151	Between HV9306 and mini flow tie	4	Yes	3.68	6.14	
23	MINIFLOW	1204ML180	Between PSV9308 and mini flow tie	2.5	Yes	1.65	2.98	
24	MINIFLOW	1204ML080	Between Valves MU060 & MU068	6	Yes	2.60	8.49	
25	MINIFLOW	1219ML107	Between Valves MU068 and T005	10	No	10.39	16.0	
26	RWST	1219ML057	Between T006 and MU067 (gravity feed to charging)	6	No	6.97	14.06	A.13
27	RWST	1219ML066	Between T006 and MU070 (to SFP make up pump)	3	No	5.06	5.68	A.14
				4	No	4.89	8.02	

Notes:
1) Items 8 and 17 are high energy lines but were not evaluated because piping is Schedule 20.
2) The 14 NPS piping in CS Trains A and B (Items 9 and 18) are Schedule 20 and therefore were not evaluated.

2.2 Allowable Axial Flaw Lengths

The allowable axial TW flaw lengths were computed for bounding operating pressure and temperature conditions following N-513-2. Specific calculations for allowable axial TW flaw lengths are given in Section 8.4. The results are summarized in Table 2-2.

Table 2-2
Summary of Allowable Axial Through-Wall Lengths
(P_o = 110 psi, T_o = 275°F)

Pipe Size (NPS)	OD (in)	t (in)	ℓ_{allow} (in)
2.5	2.875	0.120	9.16
3	3.5	0.120	8.32
4	4.5	0.120	7.35
6	6.625	0.134	7.14
8	8.625	0.148	7.25
10	10.75	0.165	7.62
14	14.00	0.188	8.08
16	16.00	0.188	7.51
24	24.00	0.250	9.32

3.0 ASSUMPTIONS

The following major analysis assumptions are made:

1. Code Case N-513-2 is used as guidance. Flaw evaluation methods in Appendix C of ASME Section XI are generally applicable for Schedule 10s austenitic stainless steel pipe.
2. ASME Appendix C is applicable to NPS $\geq$ 4 as stated in IWB-3640. For sizes less than 4 NPS, the methods of Appendix C are generally applicable and are used herein for NPS < 4. To be conservative, the Z factor for NPS equal to 4 will be used when the pipe size under evaluation is less than NPS 4. This is conservative since the trend in Z factor is to decrease with NPS. Assuming NPS 4 for sizes less than NPS 4 will cause a higher stress multiplier to be applied in the calculation for allowable flaw length.
3. The failure mode is conservatively assumed to be elastic-plastic ductile fracture for circumferential flaws at pipe butt weld locations. For circumferential flaws not associated with flux welds, e.g., tungsten inert gas (TIG) welds and wrought pipe locations including locations at attachment welds, limit load failure mode is assumed.
4. For circumferentially oriented flaws located at the butt welds the weld properties are conservatively assumed to be those of flux welds, either shielded metal-arc (SMAW) or submerged-arc (SAW) welds. When applicable, a separate analysis for allowable TW length for flaws not associated with flux butt welds, such as TIG welds, attachment welds, or in wrought pipe, was completed for use in flaw acceptance provided the material product form and weld process can be established.
5. For axial oriented flaws, the properties of wrought pipe are assumed in the limit load evaluation.
6. Following the pipe flaw evaluation procedures for austenitic materials in ASME Section XI, Appendix C, weld residual stresses do not need to be included in the evaluation of allowable flaw size and are therefore neglected in the calculation of allowable flaw length.
7. Design basis conditions include sustained and occasional (upset and faulted) loads. Occasional loads control the design of the piping. There are no loading conditions classified as emergency. Therefore, the calculations for allowable flaw length are based on the limiting criteria for upset and faulted loads.

4.0 DESIGN INPUT

4.1 Piping Geometry

The piping geometry was extracted from the piping design calculations and summary listing (Ref. 2). The piping geometry for ECCS is given below:

Table 4-1
Piping Dimensions – Schedule 10s

NPS	OD (in)	t (in)	R (in)	R/t
2.5	2.875	0.12	1.378	11.48
3	3.5	0.12	1.690	14.08
4	4.5	0.12	2.190	18.25
6	6.625	0.134	3.246	24.22
8	8.625	0.148	4.239	28.64
10	10.75	0.165	5.293	32.08
14	14.00	0.188	6.906	36.73
16	16.00	0.188	7.906	42.05
24	24.00	0.25	11.875	47.50

The dimensions for the range in pipe sizes were obtained from Ref. 4.

4.2 Materials of Construction

The ECCS piping is constructed from Type 304 stainless steel in three different material specifications: ASME SA-376 TP 304, ASME SA-358 Grade T304, Class 1, and ASME SA-312, T304. The material specifications are listed in Table 1-1 for each subsystem. The mechanical properties for these specifications are listed under the same material grouping for specified minimum yield, tensile and allowable stress. The specified minimum strength properties for the pipe materials are given in Table 4-2 (Ref. 5):

Table 4-2
Mechanical Strength Properties

Parameter	-20 to 100°F	200°F	300°F	400°F
S_y (ksi)	30.0	25.0	22.5	20.7
S_u (ksi)	75.0	71.0	66.0	64.4
S (ksi)	18.8	17.8	16.6	16.2

4.3 Design and Operating Conditions

The design and operating conditions for the ECCS piping were extracted from Ref. 2. The reported conditions indicated operating pressures were in the range of 15 psig to 110 psig as shown in Table 4-3. The operating temperatures are in the range of ambient to 275°F.

In the calculation of the generic graphs for allowable effective bending stress versus TW flaw length, the bounding operating conditions for all ECCS Schedule 10s pipe were used:

P_o = 110 psig
T_o = 275°F

The bounding operating conditions are also conservatively used in the evaluation of axial flaws.

APTECH
ENGINEERING ◘ SCIENCE ◘ TECHNOLOGY

Calculation No.: AES-C-7384-2	Made by: RCC	Date: 5/14/10	Client: SCE
Title: Allowable Through-Wall Flaws in ECCS Schedule 10s Piping at SONGS Units 2 & 3	Checked by: CQL	Date: 5/14/10	Project No.: AES-10027384-2Q
	Revision No.: 0	Document Control No.: I-2	Page No.: 13 of 101

Table 4-3
Summary of Design and Operating Conditions

	Subsystem	Line	Section Description	Size (NPS)	P_D (psig)	T_D (°F)	P_O (psig)	T_O (°F)
1	RWST	1204ML001	Between T005 and HV9300	24	25	150	15	AMB
2	ALL TRAIN A	1204ML001	Between HV9300 and MU001	24	25	150	15	AMB
3	ALL TRAIN A	1204ML108/003/ 007/009	Bounded by Valves MU001, MU003, MU007, MU010, and MU062	24/10/16	110	250	110	225
4	HPSI TRAIN A	1204ML007	Between MU007 and P017	8	110	250	110	225
5	HPSI COMMON	1204ML009	Between MU010, MU011 and P018	8	110	250	110	225
6	ALL TRAIN A	1204ML003	Between MU003 and HV9303	24	110	250	110	225
7	ALL TRAIN A	1204ML003	Between HV9303 and Emergency Sump	24	110	250	110	225
8	LPSI TRAIN A	1204ML032	Between "T" of Line ML003 and P015 [see Note]	14	435	400	435	350
9	CS TRAIN A	1204ML003	Between MU062 and P012	16/14	110	250	110	225
10	RWST	1219ML073	Between T005 and MU075	3	25	150	15	AMB
11	RWST	1204ML002	Between T006 and HV9301	24	25	150	15	AMB
12	ALL TRAIN B	1204ML002	Between HV9301 and MU002	24	25	150	15	AMB
13	ALL TRAIN B	1204ML109/004/ 031/008/010	Bounded by Valves MU002, MU004, MU009, MU011, MU005, & MU199	24/10/16	110	250	110	225
14	HPSI TRAIN B	1204ML008	Between MU009 and P019	8	110	250	110	225
15	ALL TRAIN B	1204ML004	Between MU004 and HV9302	24	110	250	110	225
16	ALL TRAIN B	1204ML004	Between HV9302 and Emergency Sump	24	110	250	110	225
17	LPSI TRAIN B	1204ML033	Between MU199 and P016 [see Note]	14	-	-	-	-
18	CS TRAIN B	1204ML004	Between MU005 and P013	16/14	110	250	110	225
19	RWST	1219ML072	Between T006 and MU074	3	25	150	15	AMB
20	RWST	1219ML068	RWST Crosstie	24	25	150	15	AMB
21	MINIFLOW	1204ML131	Between HV9347 and mini flow tie	4	175	400	50	275
22	MINIFLOW	1204ML151	Between HV9306 and mini flow tie	4	175	400	50	275
23	MINIFLOW	1204ML180	Between PSV9308 and mini flow tie	2.5	175	400	50	275
24	MINIFLOW	1204ML080	Between Valves MU060 & MU068	6	175	400	50	275
25	MINIFLOW	1219ML107	Between Valves MU068 and T005	10	175	150	15	AMB
26	RWST	1219ML057	Between T006 and MU067 (gravity feed to charging)	6	25	150	15	AMB
27	RWST	1219ML066	Between T006 and MU070 (to SFP make up pump)	4	25	150	15	AMB

Note: Items 8 and 17 are high energy lines but were not evaluated because piping is Schedule 20.

4.4 Design Stress Data

The piping design stresses for use in the flaw evaluation for upset and faulted loading conditions are given in the Appendix A for each ECCS subsystems listed in Table 4-3. A listing of the relevant piping stress calculations and process and instrumentation diagrams (P&ID) was provided in Refs. 2 and 6. The design stress input for this calculation is given in Ref. 7. The P&IDs for the ECCS subsystems are given in Appendix B as provided in Ref. 8.

5.0 ANALYSIS METHOD

Code Case N-513-2 provides evaluation criteria and requirements which were applied in this calculation. N-513-2 refers to the analytical methods of ASME Section XI Appendix C for performing evaluations for planar flaws in piping, including TW (leaking) flaws. Figure 5-1 is a schematic illustration of the flaw models in Appendix C.

The allowable TW flaw lengths were calculated following the procedures of Appendix C for the Schedule 10s austenitic stainless steel piping in the ECCS. Allowable circumferential flaws were determined from the procedures of Article C-5320 and C-6320 of Appendix C for limit load and elastic plastic failure mechanisms. Allowable axial flaws were determined for limit load failure mode following the procedures of C-5420 as provided in N-513-2. Flaw acceptance criteria of C-2620 were used to establish the allowable TW lengths.

The analytical evaluation methods of Article C-6320 for ductile fracture using elastic-plastic fracture mechanics (EPFM) criteria were used in the determination of allowable TW flaw lengths under upset and faulted loading conditions. The EPFM method is appropriate to account for the possibility of having lower toughness weldments in the austenitic pipe. These welds are classified as flux welds in Appendix C of ASME Section XI, and incorporate either SAW or SMAW process. For flaws not associated with butt welds made by SAW or SMAW, such as TIG welding or wrought pipe, the analytical evaluation methods of Article C-5320 for limit load failure were used in the determination of allowable TW flaw lengths.

5.1 Ductile Fracture Evaluation

The allowable TW flaw lengths for EPFM are determined analytically from the evaluation of combined membrane plus bending stress, and membrane stress only. The allowable TW flaw length is the smallest TW flaw length from these evaluations considering each design-basis loading condition.

5.1.1 Combined Stress

The analytical methods of C-6321 of ASME Code, Section XI, Appendix C for circumferential flaws under combined membrane plus bending loads require that

$$S_c = \frac{1}{SF_b}\left[\frac{\sigma_b^c}{Z} - \sigma_e\right] - \sigma_m\left[1 - \frac{1}{ZSF_m}\right] \qquad (5\text{-}1)$$

where

S_c = allowable primary bending stress for circumferentially flawed pipe

σ^c_b = bending stress at incipient plastic collapse from C-5321

σ_m = membrane stress

APTECH
ENGINEERING ◘ SCIENCE ◘ TECHNOLOGY

Calculation No.: AES-C-7384-2	Made by: RCC	Date: 5/14/10	Client: SCE
Title: Allowable Through-Wall Flaws in ECCS Schedule 10s Piping at SONGS Units 2 & 3	Checked by: CQL	Date: 5/14/10	Project No.: AES-10027384-2Q
	Revision No.: 0	Document Control No.: I-2	Page No.: 16 of 101

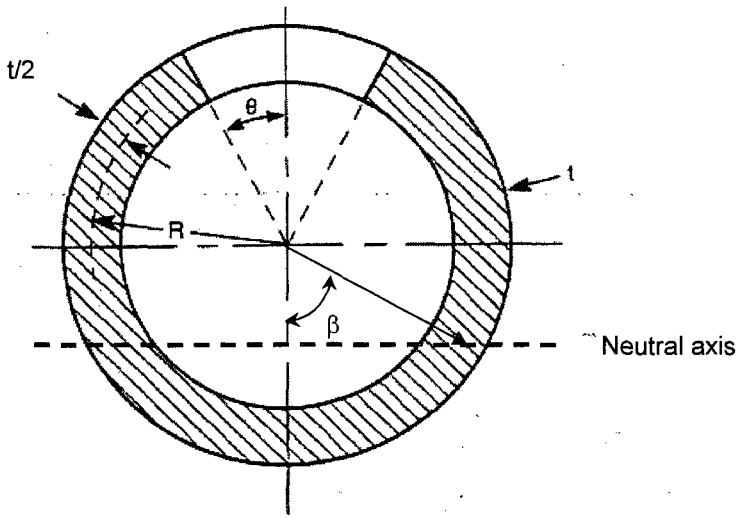

(a) Circumferential Flaw

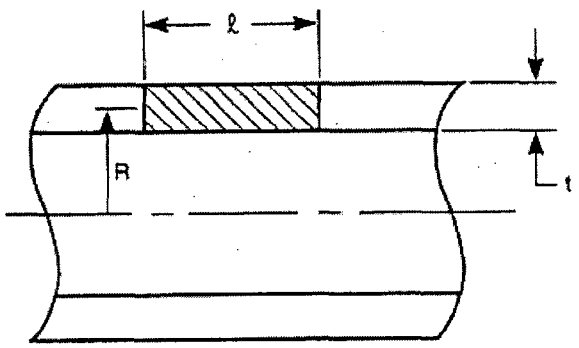

(b) Axial Flaw

Figure 5-1 – Through Wall Flaw Models for Pipe Flaw Evaluation in ASME Section XI

σ_e = thermal expansion stress
SF_m = structural factor for membrane stress (C-2621)
SF_b = structural factor for bending stress (C-2621)
Z = Load multiplier to account for elastic-plastic material behavior (Z factor)

The Z factors for flux welds are given in C-6330 and are computed from the following equation:

$$Z = 1.30\left[1 + 0.010(NPS - 4)\right]$$

where NPS is the nominal pipe size. Note that Z can not be less than unity.
Solving for the bending stress at plastic collapse from the above requirement on primary bending load gives the following when $S_c = \sigma_b$,

$$\sigma_b^c = Z SF_b\left[\sigma_m + \sigma_b + \frac{\sigma_e}{SF_b}\right] - \frac{SF_b}{SF_m}\sigma_m \qquad (5\text{-}2)$$

The TW flaw length as shown in Figure 5-1a, and applied stress level required to cause the remaining weld cross-section to become fully plastic, is given by:

$$\sigma_b^c = \frac{2\sigma_f}{\pi}\left[2\sin\beta - \sin\theta\right]$$

$$\beta = \frac{\pi}{2}\left[1 - (\theta/\pi) - (\sigma_m/\sigma_f)\right] \qquad (5\text{-}3)$$

when $(\theta + \beta) \leq \pi$, and

$$\sigma_b^c = \frac{2\sigma_f}{\pi}\sin\beta$$

$$\beta = -\pi\frac{\sigma_m}{\sigma_f} \qquad (5\text{-}4)$$

when $(\theta + \beta) > \pi$. The angle θ is the crack half-angle where the vertical axis passes through the centerline of the flaw. The angle β is the angle to the neutral axis for bending measured from the vertical

axis. The solution for the allowable TW flaw length is therefore calculated by equating Eq. 5-2 with Eq. 5-3 or Eq. 5-4, as appropriate, and solving for allowable TW flaw half-angle, θ_{allow}, by an iterative method. The allowable TW length is

$$\ell_{allow} = \theta_{allow} D_o \tag{5-5}$$

where D_o is the outside diameter. The determination of σ_m, σ_b, and σ_e is discussed in Section 5.3. The flow stress, σ_f, for the pipe material is defined later in Section 5.4.

5.1.2 Membrane Stress

The analytical methods of C-6322 of ASME Code, Section XI, Appendix C for circumferential flaws under pure membrane loads require that

$$S_t = \left[\frac{\sigma_m^c}{ZSF_m}\right] \tag{5-6}$$

where

S_t = allowable primary membrane stress for circumferentially flawed pipe
σ^c_m = membrane stress at incipient plastic collapse from C-5322
SF_m = structural factor for membrane stress (C-2621)

Solving for the membrane stress at plastic collapse from the above requirement on primary membrane load gives the following when $S_t = \sigma_m$,

$$\sigma_m^c = ZSF_m \sigma_m \tag{5-7}$$

The TW flaw length and applied membrane stress level required to cause the remaining weld cross-section to become fully plastic is given by:

$$\sigma_m^c = \sigma_f \left[1 - \theta/\pi - 2\varphi/\pi\right]$$
$$\varphi = \sin^{-1}(0.5\sin\theta) \tag{5-8}$$

The solution for the allowable TW flaw length is therefore calculated by equating Eq. 5-7 with Eq. 5-8 and solving for allowable TW half-crack angle by an iterative method. The allowable TW flaw length is defined by Eq. 5-5.

5.1.3 Acceptance Criteria

The acceptance criteria for circumferential flaws per the requirements of N-513-2 are those specified in Article C-2620 of ASME Section XI, Appendix C in the form of analysis structural factors. The structural factors for upset (Service Level B) and faulted (Service Level D) for circumferential flaws are given in Table 5-1.

Table 5-1
Analysis Structural Factors for Flaw Acceptance

Loading Condition	Membrane Stress (SF_m)	Bending Stress (SF_b)
Normal	2.7	2.3
Upset	2.4	2.0
Emergency	1.8	1.6
Faulted	1.3	1.4

It should be noted that normal loading condition will not be limiting. Also, the affected piping system does not have emergency classified conditions as part of the design basis.

5.2 Limit Load Evaluation

The allowable TW flaw lengths for limit load failure mode are determined analytically from the evaluation of combined stress and membrane stress. The allowable TW flaw length is the smallest TW flaw length from these evaluations considering each design-basis loading condition.

The analytical methods of C-5320 of ASME Code, Section XI, Appendix C for circumferential flaws under combined membrane and bending stress, and pure membrane stress, for limit load failure mode require:

$$S_c = \frac{\sigma_b^c}{SF_b} - \sigma_m\left[1 - \frac{1}{SF_m}\right] \qquad (5\text{-}9)$$

$$S_t = \left[\frac{\sigma_m^c}{SF_m}\right] \qquad (5\text{-}10)$$

where again S_c is the allowable primary bending stress and S_t is the allowable primary membrane stress, for circumferentially flawed pipe.

It can be seen from Eqs. 5-9 and 5-10 that the requirements for LL are similar to the EPFM method except that expansion stress is not considered ($\sigma_e = 0$) and Z factor is defined as unity (Z = 1.0).

5.3 Piping Stresses

In determining the applied stresses from ASME Section III piping stress data, the membrane and bending stresses are the unconcentrated primary bending stress; that is, with the stress intensification factor (SIF) removed from the appropriate code equation. This is accomplished by dividing the code bending stress by either 0.75i or "i" as appropriate. Note that 0.75i can not be less than unity.

The code stresses were extracted from the base calculations for each ECCS subsystem (see appendices). The code equations from ASME Section III Subsection NC are as follows (Ref. 9):

- Equation 8 Sustain loads for pressure and dead weight (DW)

$$S_{SL} = P_m + 0.75i\frac{M_A}{Z_c}$$

- Equation 9 Occasional load including upset (Eq. 9U) and faulted (Eq. 9F) conditions

$$S_{OL} = P_m + 0.75i\frac{(M_A + M_B)}{Z_c}$$

- Equation 10 Thermal expansion including seismic anchor movement

$$S_{TE} = i\frac{M_C}{Z_c}$$

where M_A is the resultant moment due to DW and other sustained loads, M_B is the resultant moment due to occasional loads such as thrusts, safety valve loads, earthquake, etc., and M_C is the resultant moment due to thermal expansion including moment effects from seismic anchor movements if anchor displacement effects were omitted from Eq. 9.

The stresses for use in the flaw evaluation for upset and faulted loading conditions are determined from the above code equations as follows

1) The primary axial membrane stress is calculated from the minimum value from the two equations below:

$$P_m = \frac{PD_o}{4t}$$

$$P_m = \frac{PD_i^2}{(D_o^2 - D_i^2)}$$

2) DW is equal to Eq. 8 stress minus the membrane stress due to design pressure:

$$DW = Eq.\ 8 - P_m\big|_{Design}$$

3) Seismic DBE was determined by subtracting Eq. 8 from Eq. 9F. Seismic OBE is defined as one-half the DBE.

$$DBE = Eq.9F - Eq.8$$

$$OBE = DBE/2$$

4) The unconcentrated DW stress (DW*) is then the DW divided by 0.75i

$$DW^* = \frac{DW}{0.75i}$$

5) Axial membrane stress, σ_m, is set equal to operating pressure stress, P_m

$$\sigma_m = P_m\big|_{Operating}$$

6) Bending stress σ_b for upset conditions is equal to Eq. 9U stress minus operating pressure stress divided by 0.75i

$$\sigma_b = \frac{Eq.9U - P_m\big|_{Operating}}{0.75i}$$

7) Bending stress, σ_b for accident (faulted) conditions is equal to Eq. 9F stress minus operating pressure stress divided by 0.75i

$$\sigma_b = \frac{Eq.9F - P_m\big|_{Operating}}{0.75i}$$

8) Expansion stress, σ_e is equal to Eq. 10 stress divided by "i".

$$\sigma_e = \frac{\text{Eq.10}}{i}$$

5.4 Flow Stress

For the purpose of calculating the limit load of a pipe component, Article C-8200 of Appendix C to ASME Section XI specifies a definition for flow stress as the average of the specified minimum yield and ultimate strengths:

$$\sigma_f = \frac{S_y + S_u}{2} \qquad (5\text{-}11)$$

For strength calculations performed in this analysis, the minimum specified strength values at 275°F (maximum operating temperature) will be conservatively assumed. Based on Eq. 5-11 and the strength properties for the specified pipe material, the flow stress is:

$$\sigma_f = \frac{(23.1 + 67.3)}{2} = 45.2\,\text{ksi}$$

This value for σ_f will be used in the evaluation of the pipe.

5.5 Consideration for Axial Flaws

For flaws oriented axially along the pipe, the allowable through-wall flaw length is determined from the equations in N-513-2. The flaw model for this case is shown in Figure 5-1b. The governing relationship for allowable flaw length is given below:

$$\ell_{allow} = 1.58(Rt)^{0.5}\left[\left(\frac{\sigma_f}{(SF_m)\sigma_h}\right)^2 - 1\right]^{0.5} \qquad (5\text{-}12)$$

where

R = mean pipe radius
t = wall thickness
σ_f = flow stress

APTECH
ENGINEERING ◘ SCIENCE ◘ TECHNOLOGY

Calculation No.: AES-C-7384-2	Made by: RCC	Date: 5/14/10	Client: SCE
Title: Allowable Through-Wall Flaws in ECCS Schedule 10s Piping at SONGS Units 2 & 3	Checked by: CQL	Date: 5/14/10	Project No.: AES-10027384-2Q
	Revision No.: 0	Document Control No.: I-2	Page No.: 23 of 101

σ_h = hoop stress due to operating pressure = $P_oD_o/2t$
D_o = outside pipe diameter
SF_m = structural factor for membrane stress (C-2622)

Equation 5-12 will be used in this calculation to verify that the allowable flaw length for circumferential flaws will be bounding for axial oriented flaws.

6.0 REFERENCES

1. Code Case N-513-2, Evaluation Criteria for Temporary Acceptance of Flaws in Moderate Energy Class 2 or 3 Piping," ASME Section XI, Division 1, Nuclear Code Cases, Supplement 1, (February 20, 2004).

2. Summary Listing of ECCS Subsystems from SCE, "Walkdown Scope and Resolution Matrix Spreadsheet," Full List 051410.xls, dated May 14, 2010.

3. ASME Boiler and Pressure Vessel Code, Section XI, "Inservice Inspection of Nuclear Power Plant Components," (2001 Edition, 2002 Addenda)

4. ANSI Pipe Schedule and Size Standard, ANSI/ASME B36.10M.

5. ASME Boiler and Pressure Vessel Code, Section II, Part D "Material Properties," (1995 Edition)

6. Relevant calculations and P&ID references, Email from N. El-Akily (SCE) to R. Cipolla (Intertek APTECH) dated May 10, 2010.

   a) Calculation M-1204-003-02A, Rev 8, Suction Side of Safety Injection Pumps
   b) Calculation M-1204-003-03A, Rev 5, Suction Side of Safety Injection Pumps
   c) Calculation M-1204-003-AA, Rev 7, Penetration 55 Containment Emergency Sump Recirculation
   d) Calculation M-1204-008-02A, Rev 0, HPSI Pump – Temporary Piping for ISI Testing
   e) Calculation M-1204-002-02A, Rev 9, Safety Injection Lines from P-13, P-16, P-18 and P-19 to T-6
   f) Calculation M-1204-002-03A, Rev 5, Suction Side of Safety Injection System
   g) Calculation M-1204-004-AA, Rev 9, Penetration 54 Containment Emergency Sump Recirculation
   h) Calculation M-1219-072-AA, Rev 3, Refueling Water Storage Tank T-006 3" Drain 1219-072-3"-C-LL0
   i) Calculation M-1219-068-AA, Rev 3, Refueling Water Storage Tank Crosstie Tank T-005 and T-006
   j) Calculation M-1204-151-AA, Rev 8, Mini-flow from & to HPSI LPSI Pumps in SEB
   k) Calculation M-1204-080-AA, Rev 5, Line 079 to Line 107 and to Refueling Water Storage Tank T-005
   l) Calculation M-1219-057-02A, Rev 6, Line 057 from Refueling Water Storage Tank T-006 P02449-2453
   m) Calculation M-1219-057-AA, Rev 4, Refueling Water Tank to Charging Pumps Line NO 1219-057
   n) Calculation M-1219-057-04A, Rev 5, Refuel Water Tank to Charging Pumps – Unit 2
   o) Calculation M-1208-007-02A, Rev 7, AUX BLDG Acid Pump (Suction)
   p) Calculation M-1218-037-02A, Rev 2, Boric Acid Make-up Pump Disch to Vol Control Tank Charging Pump + Suction Header -Unit 2
   q) Calculation M-1219-057-03A, Rev 7, Refueling Water Tank to Charging Pumps
   r) Calculation M-1208-007-03A, Rev 5, Volume Control Tank TO77 to Charging Pump Suction
   s) Calculation M-1218-037-03A, Rev 3, Boric Acid Make-up Pump Disch to Vol Control Tank Charging Pump + Suction Header

t) Calculation M-1219-066-AA, Rev 3, P-011 + Refueling Water Storage Tank T-006 to Spent Fuel Pool Make Pump

u) P&ID 40112A, Rev 35, Safety Injection System – System No. 1204

v) P&ID 40112ASO3, Rev 38, Safety Injection System – System No. 1204

w) P&ID 40122B, Rev 26, Fuel Pool Cooling System – System No. 1219

x) P&ID 40122BSO3, Rev 21, Fuel Pool Cooling System – System No. 1219

y) P&ID 40112B, Rev 36, Safety Injection System – System No. 1204

z) P&ID 40112BSO3, Rev 37, Safety Injection System – System No. 1204

aa) P&ID 40114A, Rev 15, Containment Spray System – System No. 1206

bb) P&ID 40114ASO3, Rev 15, Containment Spray System – System No. 1206

cc) P&ID 40114D, Rev 20, Containment Spray System – System No. 1206

dd) P&ID 40114DSO3, Rev 19, Containment Spray System – System No. 1206

7. Letter from N. El-Akily (SCE) to R. Cipolla (Intertek APTECH), design inputs and stress summary tables 13 attachments (May 11, 2010)

8. Email from N. El-Akily (SCE) to R. Cipolla (Intertek APTECH) "P&ID Files," (May 11, 2010)

9. ASME Boiler and Pressure Vessel Code, Section III, Subsection NC, "Class III Components," (1977 Edition).

10. Technical discussions with N. El-Akily (SCE) regarding bounding stress values for 24 NPS pipe in Line 1204ML004 for ECCS Train B, meeting at SCE facilities (April 9, 2010).

7.0 NOMENCLATURE

A	Cross-sectional area, in.^{2}
β	Angle to the neutral axis of flawed piped, radians
D_i	Inside diameter, in.
D_o	Outside diameter, in.
i	Stress intensification factor (SIF)
ℓ_{allow}	Allowable through-wall flaw length (also as L_{allow}), in.
M_A	Resultant moment due to DW and other sustained loads, in-lbs
M_B	Resultant moment due to occasional loads such as thrusts, safety valve loads, earthquake, etc., in-lbs
M_C	Resultant moment due to thermal expansion including moment effects from seismic anchor movements if anchor displacement effects were omitted from Eq. 9, in-lbs
P	Pressure, psi
P_D	Design pressure, psi
P_m	Primary Membrane Stress, psi
P_o	Operating pressure, psi
R	Mean radius, in
σ_b	Bending stress (also SIGB), psi
σ_f	Material flow stress (also SIGF), psi
σ_b^c	Critical bending stress, psi
σ_b^{EFF}	Effective bending stress, which includes structural and analysis factors (also $SIGB^{EFF}$), psi
σ_m^c	Critical membrane stress, psi
σ_e	Thermal expansion stress including SAM (also SIGE), psi
σ_m	Membrane stress (also SIGM), psi
S_c	Allowable primary bending stress, psi
SF_b	Structural factor on bending stress
SF_m	Structural factor on membrane stress
S_y	Specified minimum yield stress, psi
S_u	Specified minimum tensile stress, psi
S_t	Allowable primary membrane stress, psi
T_D	Design temperature, (°F)
T_o	Operating temperature, (°F)
t	Wall thickness, in.
θ_{allow}	Allowable flaw half-angle, radians

Z	Load multiplier on stress
Z_c	Section modulus, in.^{3}

Acronyms

CS	Containment spray
CVCS	Chemical and volume control system
DBE	Design basis earthquake
DW	Dead weight (contains SIF)
DW*	Dead weight (with SIF removed)
ECCS	Emergency core cooling system
EPFM	Elastic-plastic fracture mechanics
HPSI	High pressure safety injection
LL	Limit load
LPSI	Low pressure safety injection
NPS	Nominal pipe size
OBE	Operating basis earthquake
OD	Outside diameter
P&ID	Piping and instrumentation diagrams
RWST	Refueling water storage tank
SAM	Seismic anchor movements
SFP	Spent fuel pool
SIF	Stress intensification factor (same as "i")

8.0 CALCULATIONS

8.1 Evaluation Overview

The calculations involve two different evaluations that may be used for accepting flaws detected in the ECCS piping. Either evaluation can be used with bounding stress inputs, or location specific stress inputs, to determine allowable stresses or flaw lengths. The first evaluation establishes generic plots that define the effective bending stress versus OD flaw length for pipe sizes from 2.5 NPS to 24 NPS (Section 8.2). This evaluation permits the assessment of flaws observed at a specific location in graphical format where the stresses at the flaw location can be determined from the piping stress analysis. The second evaluation establishes the allowable flaw length for a given set of stresses by direct calculation (Section 8.3). Again, the stress input can be location-specific stress values or bounding values.

The calculation of allowable lengths is for circumferential flaws. Under most situations, the allowable lengths for circumferential flaws will bound the axial oriented flaws. A separate calculation given in Section 8.4 provides the allowable lengths for axial TW flaws.

The list of ECCS piping covered by this calculation is given in Table 1-1. Appendix A provides the stress summaries and allowable circumferential flaw lengths from the bounding stress evaluation described in Section 8.3. Appendix B provides the P & IDs for the systems.

8.2 Allowable Effective Bending Stress

A calculation was performed for the pipe sizes in the ECCS to develop a graphical solution of effective bending stress versus flaw length for circumferentially oriented flaws. The effective bending stress is computed from Eqs. 5-3 and 5-4 for a bounding internal pressure of 110 psi and a bounding operating temperature of 275 °F. The results in graphical form are shown in Figure 8-1. An alternate set of curves are given in Figure 8.2 which are results normalized in both stress and TW flaw length. The normalized results for 24 NPS can be used to bound all pipe sizes less than 24 NPS.

The effective bending stress is defined by Eq. 5-2 whereby for butt welds fabricated from SAW or SMAW process

$$\sigma_b^{EFF} = Z SF_b \left[\sigma_m + \sigma_b + \frac{\sigma_e}{SF_b} \right] - \frac{SF_b}{SF_m} \sigma_m \qquad (8\text{-}1)$$

and for TIG welds and wrought pipe,

$$\sigma_b^{EFF} = SF_b \left[\sigma_m + \sigma_b \right] - \frac{SF_b}{SF_m} \sigma_m \qquad (8\text{-}2)$$

where,

σ_b^{EFF} is the effective bending stress at the flaw location
σ_m is the axial membrane stress at the flaw location due to actual operating pressure
σ_b is the primary bending stress at the flaw location for upset or faulted conditions
σ_e is the expansion stress at the flaw location for upset or faulted conditions
SF_m and SF_b are the structural factors defined in Table 5-1
Z is the Z factor multiplier defined in Section 5.1.1

When a bounding stress approach is used, the stress values for σ_m, σ_b, and σ_e shall be the bounding stresses for the pipe under evaluation.

To apply either Figure 8-1 or Figure 8-2 to evaluate NDE data, the effective bending stress is computed from either Eq. 8-1 or 8-2 as appropriate. The value of σ_b^{EFF}, or σ_b^{EFF}/σ_f is then plotted with the NDE length, L or $L/\pi D_o$ and compared with the allowable curve. The following procedure can be used:

1) Determine a conservative length of the flaw from the NDE data
2) For the location of the flaw, obtain the stress information from the design report (i.e., Eq. 8, 9U, 9F, and 10 code stresses).
3) If the flaw is associated with the pipe butt weld, determine the weld process used (SAW/SMAW or TIG). If this information is not available, assume the weld is SAW/SMAW.
4) Calculate the stress values for σ_m, σ_b, and σ_e from the equations in Section 5.3. It is acceptable to use the actual operating pressure for the system in calculating σ_m.
5) From the stresses in Item 3), calculate the effective bending stress, σ_b^{EFF} from either Eq. 8-1 or 8-2 depending on weld process.
6) Compare σ_b^{EFF} for the measure flaw length with Figure 8-1. Figure 8-2 can be use if σ_b^{EFF} and lengths are normalized to flow stress.

The detected flaw is acceptable if the plotted results fall below the allowable curve in Figure 8-1 or 8-2 for the given pipe size.

APTECH
ENGINEERING ◘ SCIENCE ◘ TECHNOLOGY

Calculation No.: AES-C-7384-2	Made by: RCC	Date: 5/14/10	Client: SCE
Title: Allowable Through-Wall Flaws in ECCS Schedule 10s Piping at SONGS Units 2 & 3	Checked by: CQL	Date: 5/14/10	Project No.: AES-10027384-2Q
	Revision No.: 0	Document Control No.: I-2	Page No.: 30 of 101

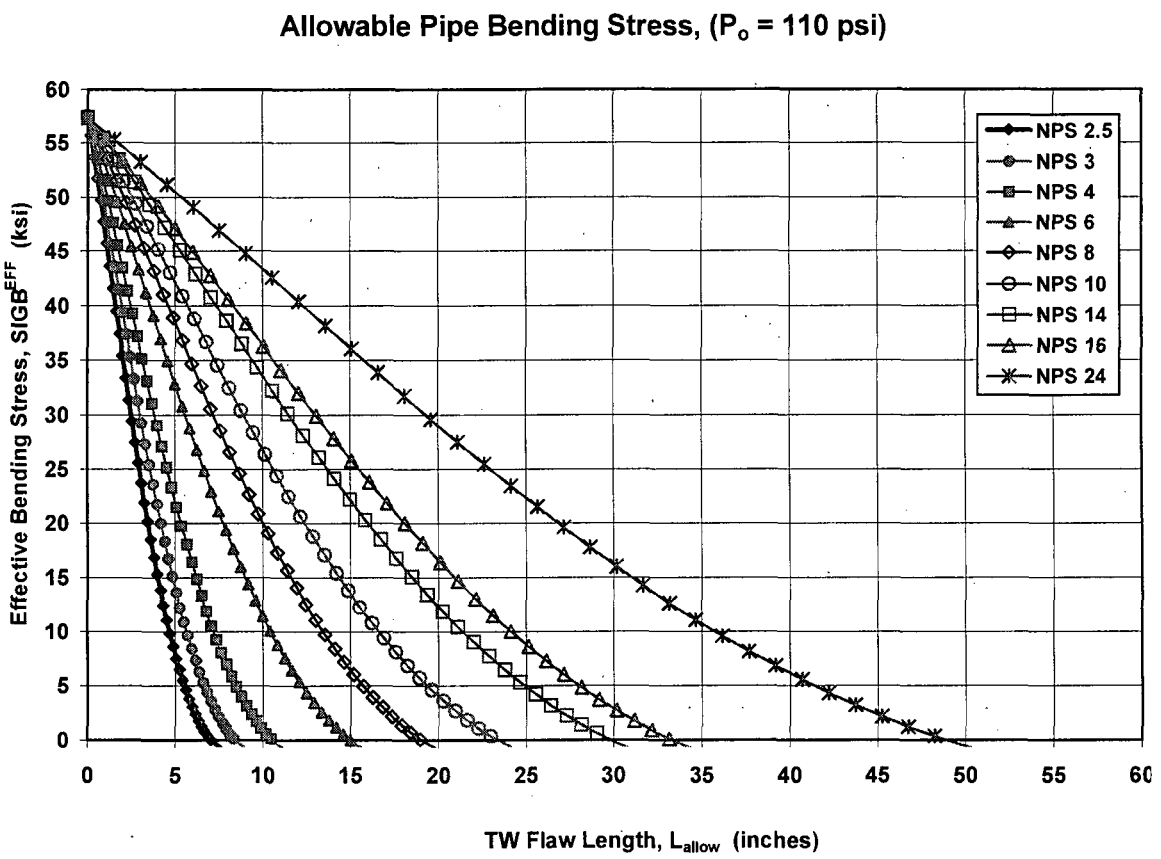

Figure 8-1 – Allowable Effective Bending Stress as a Function of Flaw Length

APTECH
ENGINEERING ◘ SCIENCE ◘ TECHNOLOGY

Calculation No.: AES-C-7384-2	Made by: RCC	Date: 5/14/10	Client: SCE
Title: Allowable Through-Wall Flaws in ECCS Schedule 10s Piping at SONGS Units 2 & 3	Checked by: CQL	Date: 5/14/10	Project No.: AES-10027384-2Q
	Revision No.: 0	Document Control No.: I-2	Page No.: 31 of 101

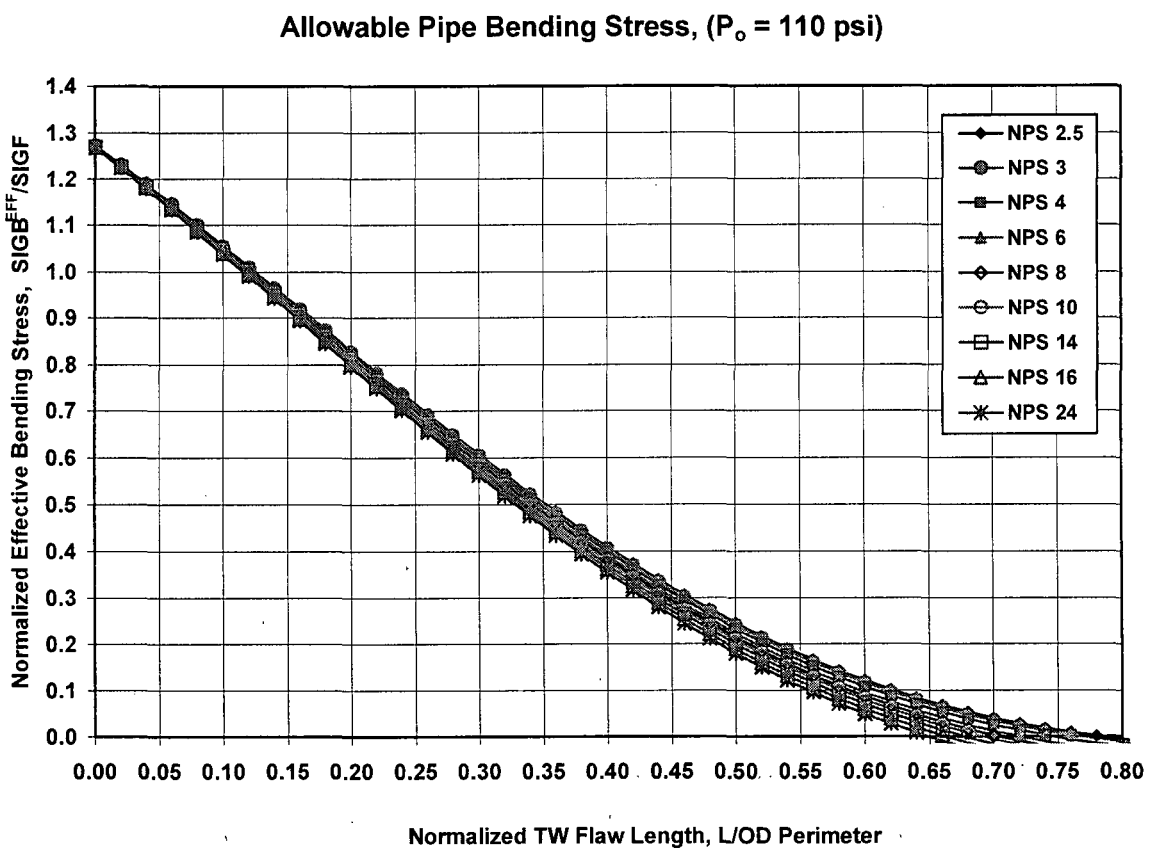

Figure 8-2 – Allowable Normalized Effective Bending Stress as a Function of Normalized Flaw Length

Figures 8-1 and 8-2 are for the combined membrane plus bending stress criteria. The membrane stress criteria were evaluated separately by calculation. Equations 5-7 and 5-8 were solved in an iterative manner to obtain the allowable TW length for the membrane stress requirement:

$$\sigma_m = \frac{\sigma_f}{Z\,SF_m}\left[1-\theta/\pi-2\varphi/\pi\right] = P_m\big|_{Operating}$$

$$\varphi = \sin^{-1}(0.5\sin\theta)$$

The solution of the above equations was performed with "Solver" in an Excel spreadsheet analysis. The results for allowable length for the limiting upset condition are given in Table 8-1.:

Table 8-1
Summary of Allowable Circumferential Through-Wall Lengths
Membrane Stress Criteria

Pipe Size (NPS)	OD (in)	SAW and SMAW [1]		TIG & Wrought [2]	
		ℓ_{allow} (in	% OD Circum	ℓ_{allow} (in)	% OD Circum
2.5	2.875	6.20	68.7%	6.43	71.2%
3	3.5	7.29	66.3%	7.60	69.1%
4	4.5	8.93	63.2%	9.36	66.2%
6	6.625	12.32	59.2%	13.06	62.8%
8	8.625	15.31	56.5%	16.42	60.6%
10	10.75	18.42	54.5%	19.94	59.1%
14	14.00	22.78	51.8%	25.14	57.1%
16	16.00	24.74	49.2%	27.72	55.2%
24	24.00	34.53	45.8%	40.17	53.3%

Notes:
1) Pipe butt welds from submerged arc (SAW) or shielded metal arc (SMAW) process.
2) Pipe butt welds from tungsten inert gas (TIG) or wrought pipe.

In summary, the detected flaw can not exceed the TW lengths determined from Figure 8-1 or 8-2 for combined stress, and the TW lengths in Table 8-1 for membrane stress criteria. When determining the allowable TW length, the smallest calculated length from either the combined stress criteria as applied to upset and faulted loading conditions or membrane stress criteria defines the allowable length.

8.3 Allowable Circumferential Flaw Lengths

A bounding calculation was performed for the pipe sizes in the ECCS. The bounding method uses the highest calculated stresses for each pipe size for a given subsystem or pipe run. The stresses envelop the piping nodal stresses, i.e., the Eqs. 8, 9U, 9F and 10 stress values are taken from the highest stress locations in each stress category and combined for evaluation purposes. Appendix A contains the stress summary and the determination of the bounding (maximum enveloping) stresses for σ_m (operating), σ_b (upset), σ_b (faulted) and expansion (σ_e). The procedure for computing σ_m, σ_b (upset and faulted) and σ_e is provided in Section 5.3. The 27 piping items listed in Table 1-1 were group into 13 calculation packages. These calculations are given in Sections A.2 through A.14 in Appendix A.

The calculations for ℓ_{allow} were performed by spreadsheet analysis using MS Excel. The iterative solutions for Eqs. 5-2, 5-3, and 5-4 for combined loading criteria, and Eqs. 5-7 and 5-8 for membrane criteria, were obtained using the "Solver" feature in Excel. The allowable TW circumferential length is the smallest calculated length from either the combined stress criteria or membrane stress criteria as applied to upset and faulted loading conditions. The results from the analysis are given in the appendices by pipe size for each ECCS subsystem.

8.4 Allowable Axial Flaw Lengths

The allowable axial TW flaw lengths were computed for each pipe size in the ECCS. Equation 5-12 was used to determine the lengths for the maximum operating pressure of 110 psi and the highest operating temperature of 275°F. The results of the calculation are given in Table 8-2.

Table 8-2
Summary of Allowable Axial Through-Wall Lengths
(P_o = 110 psi, T_o = 275°F)

Pipe Size (NPS)	OD (in)	t (in)	ℓ_{allow} (in)
2.5	2.875	0.120	9.16
3	3.5	0.120	8.32
4	4.5	0.120	7.35
6	6.625	0.134	7.14
8	8.625	0.148	7.25
10	10.75	0.165	7.62
14	14.00	0.188	8.08
16	16.00	0.188	7.51
24	24.00	0.250	9.32

Appendix A

Evaluation for Allowable Flaw Lengths for ECCS Schedule 10s Piping

A.1 Introduction

The allowable flaw lengths for the ECCS and related systems are determined in this appendix. The stresses for use in the flaw evaluation for upset and faulted loading conditions are determined from the code equations as discussed in Section 5.0. Stress values were extracted from the design stress reports. The P & IDs and associated calculation numbers are given in Appendix B.

Table A1-1 provides the details for each of the 27 subsystems and includes line numbers, section description as defined in the P & IDs, operating pressure and temperature, nominal pipe size and whether the line is a high or moderate energy. The 27 subsystems are grouped in 13 calculation packages, which are given in Sections A.2 through A.14. The groups were constructed according to common systems, pipe sizes, and design conditions, as determined from the SCE stress summaries. The appendix sections where the calculation results are given are given in the last column of Table A1-1.

Bounding stresses (i.e., maximum envelop values) were used in the calculation for allowable through wall (TW) flaw lengths. The allowable flaw length results are given in tabular format by pipe size for the different systems and subsystems. The stress summaries used in the evaluations to establish the bounding stress values by pipe size and/or subsystem are also tabulated in each appendix section.

Table A1-2 gives the summary of the calculated allowable TW flaw lengths based on the bounding stresses determined from the design stress summaries. In all calculations, a boundary temperature of 275°F was conservatively assumed, regardless of the actual operating temperature, in determining the yield and ultimate strength for the pipe.

A listing of references providing the calculation numbers from which the stresses were extracted is given in Table A1-3.

APTECH
ENGINEERING ◘ SCIENCE ◘ TECHNOLOGY

Calculation No.: AES-C-7384-2	Made by: RCC	Date: 5/14/10	Client: SCE
Title: Allowable Through-Wall Flaws in ECCS Schedule 10s Piping at SONGS Units 2 & 3	Checked by: CQL	Date: 5/14/10	Project No.: AES-10027384-2Q
	Revision No.: 0	Document Control No.: I-2	Page No.: 35 of 101

Table A1-1
Summary of ECCS Subsystem Descriptions and Analysis Index

	Subsystem	Line	Section Description	P_0 (psig)	T_o (°F)	Pipe Sizes (NPS)	High Energy Line	Appendix Section
1	RWST	1204ML001	Between T005 & HV9300	15	AMB	24	No	A.2
2	ALL TRAIN A	1204ML001	Between HV9300 & MU001	15	AMB	24	No	
3	ALL TRAIN A	1204ML108/003/ 007/009	Bounded by Valves MU001, MU003, MU007, MU010, and MU062	110	225	24/10/16	Yes	A.3
4	HPSI TRAIN A	1204ML007	Between MU007 & P017	110	225	8	Yes	A.4
5	HPSI COMMON	1204ML009	Between MU010, MU011 and P018	110	225	8	Yes	A.5
6	ALL TRAIN A	1204ML003	Between MU003 & HV9303	110	225	24	Yes	A.6
7	ALL TRAIN A	1204ML003	Between HV9303 & Emergency Sump	110	225	24	Yes	
8	LPSI TRAIN A	1204ML032	Between "T" of Line ML003 and P015	435	350	14		[Note 1]
9	CS TRAIN A	1204ML003	Between MU062 & P012	110	225	16/14	Yes	A.3
10	RWST	1219ML073	Between T005 & MU075	15	AMB	3	No	A.7
11	RWST	1204ML002	Between T006 & HV9301	15	AMB	24	No	A.8
12	ALL TRAIN B	1204ML002	Between HV9301 & MU002	15	AMB	24	No	
13	ALL TRAIN B	1204ML109/004/ 031/008/010	Bounded by Valves MU002, MU004, MU009, MU011, MU005, and MU199	110	225	24/10/16	Yes	A.9
14	HPSI TRAIN B	1204ML008	Between MU009 and P019	110	225	8	Yes	A.5
15	ALL TRAIN B	1204ML004	Between MU004 & HV9302	110	225	24	Yes	A.10
16	ALL TRAIN B	1204ML004	Between HV9302 and Emergency Sump	110	225	24	Yes	
17	LPSI TRAIN B	1204ML033	Between MU199 and P016	-	-	14	Yes	[Note 1]
18	CS TRAIN B	1204ML004	Between MU005 & P013	110	225	16/14	Yes	A.9
19	RWST	1219ML072	Between T006 & MU074	15	AMB	3	No	A.7
20	RWST	1219ML068	RWST Crosstie	15	AMB	24	No	A.11
21	MINIFLOW	1204ML131	Between HV9347 & mini flow tie	50	275	4	Yes	A.12
22	MINIFLOW	1204ML151	Between HV9306 and miniflow tie	50	275	4	Yes	
23	MINIFLOW	1204ML180	Between PSV9308 and miniflow tie	50	275	2.5	Yes	
24	MINIFLOW	1204ML080	Between Valves MU060 & MU068	50	275	6	Yes	
25	MINIFLOW	1219ML107	Between Valve MU068 and T005	15	AMB	10	No	
26	RWST	1219ML057	Between T006 and MU067 (gravity feed to charging)	15	AMB	6	No	A.13
27	RWST	1219ML066	Between T006 and MU070 (to SFP make up pump)	15	AMB	4/3	No	A-14

Note 1 — Items 8 and 17 are Schedule 20 and are not evaluated

APTECH
ENGINEERING ◘ SCIENCE ◘ TECHNOLOGY

Calculation No.: AES-C-7384-2	Made by: RCC	Date: 5/14/10	Client: SCE
Title: Allowable Through-Wall Flaws in ECCS Schedule 10s Piping at SONGS Units 2 & 3	Checked by: CQL	Date: 5/14/10	Project No.: AES-10027384-2Q
	Revision No.: 0	Document Control No.: I-2	Page No.: 36 of 101

Table A1-2
Summary of Allowable Flaw Length Results

	Subsystem	Line	Section Description	Pipe Size (NPS)	High Energy Line	Allowable Flaw Length ℓ_{allow} (in) SAW and SMAW	Allowable Flaw Length ℓ_{allow} (in) TIG and Wrought	Appendix Section
1	RWST	1204ML001	Between T005 and HV9300	24	No	8.83	36.9	A.2
2	ALL TRAIN A	1204ML001	Between HV9300 and MU001	24	No	8.83	36.9	
3	ALL TRAIN A	1204ML108/003 /007/009	Bounded by Valves MU001, MU003, MU007, MU010, and MU062	10	Yes	15.19	18.70	A.3
				16	Yes	15.97	22.95	
				24	Yes	24.38	36.47	
4	HPSI TRAIN A	1204ML007	Between MU007 and P017	8	Yes	12.41	15.53	A.4
5	HPSI COMMON	1204ML009	Between MU010, MU011 and P018	8	Yes	2.94	7.12	A.5
6	ALL TRAIN A	1204ML003	Between MU003 and HV9303	24	Yes	11.17	34.79	A.6
7	ALL TRAIN A	1204ML003	Between HV9303 and Emergency Sump	24	Yes	11.17	34.79	
8	LPSI TRAIN A	1204ML032	Between "T" of Line ML003 and P015	14	Evaluation not required. [Note 1].			
9	CS TRAIN A	1204ML003	Between MU062 and P012	14	Yes	[Note 2]	[Note 2]	A.3
				16	Yes	15.97	22.95	
10	RWST	1219ML073	Between T005 and MU075	3	No	7.89	8.36	A.7
11	RWST	1204ML002	Between T006 and HV9301	24	No	17.22	33.01	A.8
12	ALL TRAIN B	1204ML002	Between HV9301 and MU002	24	No	17.22	33.01	
13	ALL TRAIN B	1204ML109/004/ 031/008/010	Bounded by Valves MU002, MU004, MU009, MU011, MU005, and MU199	10	Yes	13.03	16.65	A.9
				16	Yes	19.20	25.53	
				24	Yes	17.22	33.01	A.8
14	HPSI TRAIN B	1204ML008	Between MU009 and P019	8	Yes	2.94	7.12	A.5
15	ALL TRAIN B	1204ML004	Between MU004 and HV9302	24	Yes	6.87	21.06	A.10
16	ALL TRAIN B	1204ML004	Between HV9302 and Emergency Sump	24	Yes	6.87	21.06	
17	LPSI TRAIN B	1204ML033	Between MU199 & P016	14	Evaluation not required. [Note 1].			
18	CS TRAIN B	1204ML004	Between MU005 and P013	14	Yes	[Note 2]	[Note 2]	A.9
				16	Yes	19.20	25.53	
19	RWST	1219ML072	Between T006 and MU074	3	No	7.91	8.37	A.7

APTECH
ENGINEERING ◘ SCIENCE ◘ TECHNOLOGY

Calculation No.: AES-C-7384-2	Made by: RCC	Date: 5/14/10	Client: SCE
Title: Allowable Through-Wall Flaws in ECCS Schedule 10s Piping at SONGS Units 2 & 3	Checked by: CQL	Date: 5/14/10	Project No.: AES-10027384-2Q
	Revision No.: 0	Document Control No.: I-2	Page No.: 37 of 101

Table A1-2
Summary of Allowable Flaw Length Results (Cont'd)

	Subsystem	Line	Section Description	Pipe Size (NPS)	High Energy Line	Allowable Flaw Length ℓ_{allow} (in) SAW and SMAW	TIG and Wrought	Appendix Section
20	RWST	1219ML068	RWST Crosstie	24	No	41.38	50.79	A.11
21	MINIFLOW	1204ML131	Between HV9347 and mini flow tie	4	Yes	5.88	7.50	A.12
22	MINIFLOW	1204ML151	Between HV9306 and mini flow tie	4	Yes	3.68	6.14	
23	MINIFLOW	1204ML180	Between PSV9308 and mini flow tie	2.5	Yes	1.65	2.98	
24	MINIFLOW	1204ML080	Between Valves MU060 & MU068	6	Yes	2.60	8.49	
25	MINIFLOW	1219ML107	Between Valves MU068 and T005	10	No	10.39	16.0	
26	RWST	1219ML057	Between T006 and MU067 (gravity feed to charging)	6	No	6.97	14.06	A.13
27	RWST	1219ML066	Between T006 and MU070 (to SFP make up pump)	3	No	5.06	5.68	A.14
				4	No	4.89	8.02	

Notes:
1) Items 8 and 17 are high energy lines but were not evaluated because piping is Schedule 20.
2) The 14 NPS piping in CS Trains A and B (Items 9 and 18) are Schedule 20 and therefore were not evaluated.

Table A1-3
Summary of Stress Calculation References

1) Calculation M-1204-003-02A, Rev 8, Suction Side of Safety Injection Pumps
2) Calculation M-1204-003-03A, Rev 5, Suction Side of Safety Injection Pumps
3) Calculation M-1204-003-AA, Rev 7, Penetration 55 Containment Emergency Sump Recirculation
4) Calculation M-1204-008-02A, Rev 0, HPSI Pump – Temporary Piping for ISI Testing
5) Calculation M-1204-002-02A, Rev 9, Safety Injection Lines from P-13, P-16; P-18 and P-19 to T-6
6) Calculation M-1204-002-03A, Rev 5, Suction Side of Safety Injection System
7) Calculation M-1204-004-AA, Rev 9, Penetration 54 Containment Emergency Sump Recirculation
8) Calculation M-1219-072-AA, Rev 3, Refueling Water Storage Tank T-006 3" Drain 1219-072-3"-C-LL0
9) Calculation M-1219-068-AA, Rev 3, Refueling Water Storage Tank Crosstie Tank T-005 and T-006
10) Calculation M-1204-151-AA, Rev 8, Mini-flow from & to HPSI LPSI Pumps in SEB
11) Calculation M-1204-080-AA, Rev 5, Line 079 to Line 107 and to Refueling Water Storage Tank T-005
12) Calculation M-1219-057-02A, Rev 6, Line 057 from Refueling Water Storage Tank T-006 P02449-2453
13) Calculation M-1219-057-AA, Rev 4, Refueling Water Tank to Charging Pumps Line NO 1219-057
14) Calculation M-1219-057-04A, Rev 5, Refuel Water Tank to Charging Pumps – Unit 2
15) Calculation M-1208-007-02A, Rev 7, AUX BLDG Acid Pump (Suction)
16) Calculation M-1218-037-02A, Rev 2, Boric Acid Make-up Pump Disch to Vol Control Tank Charging Pump + Suction Header -Unit 2
17) Calculation M-1219-057-03A, Rev 7, Refueling Water Tank to Charging Pumps
18) Calculation M-1208-007-03A, Rev 5, Volume Control Tank TO77 to Charging Pump Suction
19) Calculation M-1218-037-03A, Rev 3, Boric Acid Make-up Pump Disch to Vol Control Tank Charging Pump + Suction Header
20) Calculation M-1219-066-AA, Rev 3, P-011 + Refueling Water Storage Tank T-006 to Spent Fuel Pool Make Pump

A.2 ECCS RWST and All Train A (Line 1204ML001)

The allowable flaw lengths for the ECCS RWST between T005 and HV9300 and All Train A between HV9300 and MU001 were calculated in Section A.2. Stress values were extracted from SCE summaries (Ref. 7, Attachment 2). The allowable flaw length results are given in Tables A2-1 and A2-2 for sections between T005 and HV9300 and H9300 and MU001. The stress summaries used in the evaluation are given in Table A2-3 for the 24 NPS Schedule 10s piping.

Two material conditions were evaluated: flux-welded pipe by SAW or SMAW process, and TIG welded and wrought pipe. For pipe butt welds using SAW or SMAW, the following allowable flaw lengths were determined:

Table A2-1
Summary of Allowable Through-Wall Flaw Length Results
RWST between T005 and HV9300 and All Train A between H9300 and MU001
(SAW and SMAW)

Line	Pipe Size	OD (in)	Loading Condition	Combined Stress Criteria (in)	Membrane Stress Criteria (in)	Allowable Length ℓ_{allow} (in)	% OD Circum.	Limiting Condition
1204ML001	24	24.00	Upset	13.08	50.28	**8.83**	11.7%	Faulted
			Faulted	8.83	54.83			

For TIG welds and wrought pipe, the following allowable flaw lengths were determined:

Table A2-2
Summary of Allowable Through-Wall Flaw Length Results
RWST between T005 and HV9300 and All Train A between H9300 and MU001
(TIG and Wrought)

Line	Pipe Size	OD (in)	Loading Condition	Combined Stress Criteria (in)	Membrane Stress Criteria (in)	Allowable Length ℓ_{allow} (in)	% OD Circum.	Limiting Condition
1204ML001	24	24.0	Upset	41.41	53.67	**36.90**	48.9%	Faulted
			Faulted	36.90	57.61			

APTECH
ENGINEERING ◘ SCIENCE ◘ TECHNOLOGY

Calculation No.: AES-C-7384-2	Made by: RCC	Date: 5/14/10	Client: SCE
Title: Allowable Through-Wall Flaws in ECCS Schedule 10s Piping at SONGS Units 2 & 3	Checked by: CQL	Date: 5/14/10	Project No.: AES-10027384-2Q
	Revision No.: 0	Document Control No.: I-2	Page No.: 40 of 101

Table A2-3A
Pipe Design Stress Summary for ECCS Piping - NPS 24
Line 1204ML001 – RWST and Train A

Node	Item	Design P_m (psi)	Operating P_m (psi)	SIF (i)	ASME Section III Code Stresses					
					Eq. 8 (psi)	Eq. 9U (psi)	Eq. 9F (psi)	Eq. 10 (psi)	DW (psi)	DBE (psi)
160	Pipe	581	581	1.0	1378	2115	2700	15459	797	1322
27	Elbow (SR)	581	581	7.384	903	1509	1991	36912	322	1088
160	Pipe	581	581	1.0	1384	2190	2728	17483	803	1344
230	Pipe	581	581	1.0	1492	4295	8866	686	911	7374
27A	Elbow	581	581	5.635	743	1426	1962	33055	162	1219
240	Elbow	581	581	5.635	1194	5104	30584	8111	613	29390

Notes:
1) Operating pressure and temperature are 15 psi and ambient. The design calculations were done for a design pressure of 25 psi.
2) Seismic OBE stresses are 1/2 the faulted DBE stress values.

Table A2-3B
Pipe Design Stress Summary for ECCS Piping - NPS 24
Line 1204ML001 – RWST and Train A

Node	Item	Operating σ_m (psi)	DW* (psi)	Upset σ_b (psi))	Faulted σ_b (psi)	Expansion σ_e (psi)
160	Pipe	581	797	1534	2119	15459
27	Elbow (SR)	581	58	168	255	4999
160	Pipe	581	803	1609	2147	17483
230	Pipe	581	911	3714	8285	686
27A	Elbow	581	38	200	327	5866
240	Elbow	581	145	1070	7099	1439
Max Envelop (psi)		**581**	**911**	**3714**	**8285**	**17483**

A.3 ECCS Train A and CS Train A (Lines 1204ML108/003/007/009)

The allowable flaw lengths for the ECCS Train A and CS Train A piping in sizes NPS 24, 16, and 10 are calculated in Section A.3. Piping that is listed as NPS 14 is not evaluated because it is not Schedule 10s size.

Stress values were extracted from SCE summaries (Ref. 7, Attachment 2). The allowable flaw length results are given in Tables A3-1 and A3-2. The stress summaries used in the evaluation are given in Tables A3-3 through A3-5 for the 24, 16, and 10 NPS Schedule 10s piping.

Two material conditions were evaluated: flux-welded pipe by SAW or SMAW process, and TIG welded and wrought pipe. For the butt welds using SAW or SMAW, the following allowable flaw lengths were determined:

Table A3-1
Summary of Allowable Through-Wall Flaw Length Results
ECCS Train A Bounded by Valves MU001, MU003, MU007, MU010, and MU062
CS Train A between MU003 and HV9303
(SAW and SMAW)

Line	Pipe Size	OD (in)	Loading Condition	Combined Stress Criteria (in)	Membrane Stress Criteria (in)	Allowable Length ℓ_{allow} (in)	% OD Circum.	Limiting Condition
[Note 1]	10	10.75	Upset	15.19	18.41	**15.19**	45.0%	Upset
			Faulted	15.38	21.20			
[Note 1]	16	16.00	Upset	15.97	24.74	**15.97**	31.8%	Upset
			Faulted	16.09	29.41			
[Note 1]	24	24.00	Upset	24.38	34.53	**24.38**	32.3%	Upset
			Faulted	25.40	42.07			

Notes:
1) ECCS Train A and CS Train A, Lines 1204ML108, 003, 007, and 009.

APTECH
ENGINEERING ◘ SCIENCE ◘ TECHNOLOGY

Calculation No.: AES-C-7384-2	Made by: RCC	Date: 5/14/10	Client: SCE
Title: Allowable Through-Wall Flaws in ECCS Schedule 10s Piping at SONGS Units 2 & 3	Checked by: CQL	Date: 5/14/10	Project No.: AES-10027384-2Q
	Revision No.: 0	Document Control No.: I-2	Page No.: 42 of 101

For TIG welds and wrought pipe, the following allowable flaw lengths were determined:

Table A3-2
Summary of Allowable Through-Wall Flaw Length Results
ECCS Train A Bounded by Valves MU001, MU003, MU007, MU010, and MU062
CS Train A between MU003 and HV9303
(TIG and Wrought)

Line	Pipe Size	OD (in)	Loading Condition	Combined Stress Criteria (in)	Membrane Stress Criteria (in)	Allowable Length ℓ_{allow} (in)	% OD Circum.	Limiting Condition
[Note 1]	10	10.75	Upset	18.70	19.94	**18.70**	55.4%	Upset
			Faulted	18.96	22.44			
[Note 1]	16	16.00	Upset	22.95	27.73	**22.95**	45.7%	Upset
			Faulted	23.17	31.81			
[Note 1]	24	24.00	Upset	36.47	40.17	**36.47**	48.4%	Upset
			Faulted	37.60	46.57			

Notes:
1) ECCS Train A and CS Train A, Lines 1204ML108, 003, 007, and 009.

APTECH
ENGINEERING ⊠ SCIENCE ⊠ TECHNOLOGY

Calculation No.: AES-C-7384-2	Made by: RCC	Date: 5/14/10	Client: SCE
Title: Allowable Through-Wall Flaws in ECCS Schedule 10s Piping at SONGS Units 2 & 3	Checked by: CQL	Date: 5/14/10	Project No.: AES-10027384-2Q
	Revision No.: 0	Document Control No.: I-2	Page No.: 43 of 101

Table A3-3A
Pipe Design Stress Summary for ECCS Piping - NPS 10
Various Lines - ECCS Train A and CS Train A

Node	Item	Design P_m (psi)	Operating P_m (psi)	SIF (i)	ASME Section III Code Stresses					
					Eq. 8 (psi)	Eq. 9U (psi)	Eq. 9F (psi)	Eq. 10 (psi)	DW (psi)	DBE (psi)
28B	Pipe	1710	1710	4.646	2362	6886	10433	5981	652	8071
29	Elbow (SR)	1710	1710	5.950	2547	8113	12498	7020	837	9951
39	Elbow	1710	1710	4.550	2132	4518	6382	12549	422	4250
41	Tee (run)	1710	1710	3.386	2076	4246	6054	6766	366	3978
	Tee (run)	1710	1710	3.386	1968	5490	8274	7239	258	6306
	Tee (branch)	1710	1710	3.386	1836	6883	10927	5749	126	9091
28	Tee (branch)	1710	1710	4.646	2457	7634	11948	7245	747	9491
35	Pipe	1710	1710	1.0	1905	2909	3767	3023	195	1862
29	Elbow (SR)	1710	1710	5.950	2653	6906	10468	6461	943	7815
39	Elbow	1710	1710	4.550	2175	3671	4868	12078	465	2693
41	Tee (run)	1710	1710	3.386	2446	4008	5203	9219	736	2757
	Tee (run)	1710	1710	3.386	2270	4794	6865	9676	560	4595
	Tee (branch)	1710	1710	3.386	1887	5596	8569	8077	177	6682
94	Reducer	1710	1710	2.0	2014	3152	4066	4315	304	2052

Notes:
1) Operating pressure and temperature are 110 psi and 225°F. The design calculations were done for a design pressure of 110 psi.
2) Seismic OBE stresses are 1/2 the faulted DBE stress values.

APTECH
ENGINEERING ◘ SCIENCE ◘ TECHNOLOGY

Calculation No.: AES-C-7384-2	Made by: RCC	Date: 5/14/10	Client: SCE
Title: Allowable Through-Wall Flaws in ECCS Schedule 10s Piping at SONGS Units 2 & 3	Checked by: CQL	Date: 5/14/10	Project No.: AES-10027384-2Q
	Revision No.: 0	Document Control No.: I-2	Page No.: 44 of 101

Table A3-3B
Pipe Design Stress Summary for ECCS Piping - NPS 10
Various Lines – ECCS Train A and CS Train A

Node	Item	Operating σ_m (psi)	DW* (psi)	Upset σ_b (psi))	Faulted σ_b (psi)	Expansion σ_e (psi)
28B	Pipe	1710	187	1485	2503	1287
29	Elbow (SR)	1710	188	1435	2417	1180
39	Elbow	1710	124	823	1369	2758
41	Tee (run)	1710	144	999	1711	1998
	Tee (run)	1710	102	1488	2585	2138
	Tee (branch)	1710	50	2037	3629	1698
28	Tee (branch)	1710	214	1700	2938	1559
35	Pipe	1710	195	1199	2057	3023
29	Elbow (SR)	1710	211	1164	1963	1086
39	Elbow	1710	136	575	925	2655
41	Tee (run)	1710	290	905	1375	2723
	Tee (run)	1710	221	1214	2030	2858
	Tee (branch)	1710	70	1530	2701	2385
94	Reducer	1710	203	961	1571	2158
Max Envelop (psi)		**1710**	**290**	**2037**	**3629**	**3023**

APTECH
ENGINEERING ◘ SCIENCE ◘ TECHNOLOGY

Calculation No.: AES-C-7384-2	Made by: RCC	Date: 5/14/10	Client: SCE
Title: Allowable Through-Wall Flaws in ECCS Schedule 10s Piping at SONGS Units 2 & 3	Checked by: CQL	Date: 5/14/10	Project No.: AES-10027384-2Q
	Revision No.: 0	Document Control No.: I-2	Page No.: 45 of 101

Table A3-4A
Pipe Design Stress Summary for ECCS Piping - NPS 16
Various Lines - ECCS Train A and CS Train A

Node	Item	Design P_m (psi)	Operating P_m (psi)	SIF (i)	ASME Section III Code Stresses					
					Eq. 8 (psi)	Eq. 9U (psi)	Eq. 9F (psi)	Eq. 10 (psi)	DW (psi)	DBE (psi)
B10	Pipe	2258	2258	4.646	5001	18156	28896	19099	2743	23895
78	Elbow (SR)	2258	2258	6.810	2846	7811	11845	28313	588	8999
65	Tee (branch)	2258	2258	4.646	3207	9672	14455	9152	949	11248
70	Elbow (SR)	2258	2258	6.810	4253	8147	11111	18411	1995	6858
77	Elbow	2258	2258	5.196	2778	11777	18159	15960	520	15381
74	Taper	2258	2258	1.90	2939	5811	7964	3558	681	5025

Notes:
1) Operating pressure and temperature are 110 psi and 225°F. The design calculations were done for a design pressure of 110 psi.
2) Seismic OBE stresses are 1/2 the faulted DBE stress values.

Table A3-4B
Pipe Design Stress Summary for ECCS Piping - NPS 16
Various Lines – ECCS Train A and CS Train A

Node	Item	Operating σ_m (psi)	DW* (psi)	Upset σ_b (psi))	Faulted σ_b (psi)	Expansion σ_e (psi)
B10	Pipe	2258	787	4562	7645	4111
78	Elbow (SR)	2258	115	1087	1877	4158
65	Tee (branch)	2258	272	2128	3500	1970
70	Elbow (SR)	2258	391	1153	1733	2704
77	Elbow	2258	133	2443	4080	3072
74	Taper	2258	478	2493	4004	1873
Max Envelop (psi)		**2258**	**787**	**4562**	**7645**	**4158**

APTECH
ENGINEERING ◻ SCIENCE ◻ TECHNOLOGY

Calculation No.: AES-C-7384-2	Made by: RCC	Date: 5/14/10	Client: SCE
Title: Allowable Through-Wall Flaws in ECCS Schedule 10s Piping at SONGS Units 2 & 3	Checked by: CQL	Date: 5/14/10	Project No.: AES-10027384-2Q
	Revision No.: 0	Document Control No.: I-2	Page No.: 46 of 101

Table A3-5A
Pipe Design Stress Summary for ECCS Piping - NPS 24
Various Lines - ECCS Train A and CS Train A

Node	Item	Design P_m (psi)	Operating P_m (psi)	SIF (i)	ASME Section III Code Stresses					
					Eq. 8 (psi)	Eq. 9U (psi)	Eq. 9F (psi)	Eq. 10 (psi)	DW (psi)	DBE (psi)
16	Pipe	2558	2558	1.0	3333	5646	7534	3388	775	4201
13	Elbow (SR)	2558	2558	7.384	3032	7002	10233	27335	474	7201
12	Tee (run)	2558	2558	4.396	3247	6680	9486	20263	689	6239
	Tee (run)	2558	2558	4.396	3133	9216	14163	6412	575	11030
	Tee (branch)	2558	2558	4.396	2704	8003	12318	20968	146	9614
28	Tee (run)	2558	2558	4.646	3509	11363	17765	5204	951	14256
	Tee (run)	2558	2558	4.646	3451	10851	16884	5933	893	13433
	Tee (branch)	2558	2558	4.646	2642	3435	4043	1057	84	1401
65	Tee (run)	2558	2558	4.646	3730	13273	20964	6313	1172	17234
	Tee (run)	2558	2558	4.646	4354	13563	20998	4622	1796	16644
	Tee (branch)	2558	2558	4.646	3512	9632	14626	7628	954	11114
16	Pipe	2558	2558	1.0	3379	4536	5378	3315	821	1999
13	Elbow (SR)	2558	2558	7.384	3251	5591	7353	24297	693	4102
12	Tee (run)	2558	2558	4.396	2968	5159	6806	18516	410	3838
	Tee (run)	2558	2558	4.396	2949	6437	9088	5584	391	6139
	Tee (branch)	2558	2558	4.396	2954	5799	7963	17517	396	5009
28	Tee (run)	2558	2558	4.646	3145	7864	11265	5433	587	8120
	Tee (run)	2558	2558	4.646	3158	7630	10940	5681	600	7782
	Tee (branch)	2558	2558	4.646	2642	3435	4043	1057	84	1401
65	Tee (run)	2558	2558	4.646	5107	7695	9683	4189	2549	4576
	Tee (run)	2558	2558	4.646	5108	7131	8737	6963	2550	3629

Notes:
1) Operating pressure and temperature are 110 psi and 225°F. The design calculations were done for a design pressure of 110 psi.
2) Seismic OBE stresses are 1/2 the faulted DBE stress values.

APTECH
ENGINEERING ■ SCIENCE ■ TECHNOLOGY

Calculation No.: AES-C-7384-2	Made by: RCC	Date: 5/14/10	Client: SCE
Title: Allowable Through-Wall Flaws in ECCS Schedule 10s Piping at SONGS Units 2 & 3	Checked by: CQL	Date: 5/14/10	Project No.: AES-10027384-2Q
	Revision No.: 0	Document Control No.: I-2	Page No.: 47 of 101

Table A3-5B
Pipe Design Stress Summary for ECCS Piping - NPS 24
Various Lines – ECCS Train A and CS Train A

Node	Item	Operating σ_m (psi)	DW* (psi)	Upset σ_b (psi))	Faulted σ_b (psi)	Expansion σ_e (psi)
16	Pipe	2558	775	3088	4976	3388
13	Elbow (SR)	2558	86	802	1386	3702
12	Tee (run)	2558	209	1250	2101	4609
	Tee (run)	2558	174	2019	3520	1459
	Tee (branch)	2558	44	1652	2960	4770
28	Tee (run)	2558	273	2527	4364	1120
	Tee (run)	2558	256	2380	4111	1277
	Tee (branch)	2558	24	252	426	228
65	Tee (run)	2558	336	3075	5282	1359
	Tee (run)	2558	515	3158	5292	995
	Tee (branch)	2558	274	2030	3463	1642
16	Pipe	2558	821	1978	2820	3315
13	Elbow (SR)	2558	125	548	866	3290
12	Tee (run)	2558	124	789	1288	4212
	Tee (run)	2558	119	1177	1981	1270
	Tee (branch)	2558	120	983	1639	3985
28	Tee (run)	2558	168	1523	2499	1169
	Tee (run)	2558	172	1456	2406	1223
65	Tee (run)	2558	732	1474	2045	902
	Tee (run)	2558	732	1312	1773	1499
Max Envelop (psi)		**2558**	**821**	**3158**	**5292**	**4770**

A.4 ECCS HPSI Train A between MU007 and P017 (Line 1204ML007)

The allowable flaw lengths for the ECCS HPSI Train A, Line 1204ML007, in size NPS 8, are calculated in Section A.4. Stress values were extracted from SCE summaries (Ref. 7, Attachment 2). The allowable flaw length results are given in Tables A4-1 and A4-2. The stress summaries used in the evaluation are given in Table A4-3 for 8 NPS Schedule 10s piping.

Two material conditions were evaluated: flux-welded pipe by SAW or SMAW process, and TIG welded and wrought pipe. For the butt welds using SAW or SMAW, the following allowable flaw lengths were determined:

Table A4-1
Summary of Allowable Through-Wall Flaw Length Results
ECCS HPSI Train A between MU007 and P017
(SAW and SMAW)

Line	Pipe Size	OD (in)	Loading Condition	Combined Stress Criteria (in)	Membrane Stress Criteria (in)	Allowable Length ℓ_{allow} (in)	% OD Circum.	Limiting Condition
1204ML007	8	8.625	Upset	12.41	15.31	**12.41**	45.8%	Upset
			Faulted	12.47	17.45			

For TIG welds and wrought pipe, the following allowable flaw lengths were determined:

Table A4-2
Summary of Allowable Through-Wall Flaw Length Results
ECCS HPSI Train A between MU007 and P017
(TIG and Wrought)

Line	Pipe Size	OD (in)	Loading Condition	Combined Stress Criteria (in)	Membrane Stress Criteria (in)	Allowable Length ℓ_{allow} (in)	% OD Circum.	Limiting Condition
1204ML007	8	8.625	Upset	15.53	16.42	**15.53**	57.3%	Upset
			Faulted	15.64	18.35			

APTECH
ENGINEERING ◘ SCIENCE ◘ TECHNOLOGY

Calculation No.: AES-C-7384-2	Made by: RCC	Date: 5/14/10	Client: SCE
Title: Allowable Through-Wall Flaws in ECCS Schedule 10s Piping at SONGS Units 2 & 3	Checked by: CQL	Date: 5/14/10	Project No.: AES-10027384-2Q
	Revision No.: 0	Document Control No.: I-2	Page No.: 49 of 101

Table A4-3A
Pipe Design Stress Summary for ECCS Piping - NPS 8
Various Lines - ECCS HPSI Train A

Node	Item	Design P_m (psi)	Operating P_m (psi)	SIF (i)	ASME Section III Code Stresses					
					Eq. 8 (psi)	Eq. 9U (psi)	Eq. 9F (psi)	Eq. 10 (psi)	DW (psi)	DBE (psi)
47	Elbow	1521	1521	4.213	2731	4193	5407	9355	1210	2676
97X	Pipe	1521	1521	1.0	1589	3176	4425	2522	68	2836
94	Reducer	1521	1521	2.000	2050	4028	5617	7500	529	3567
97	Pipe	1521	1521	1.0	1557	3288	4806	3027	36	3249
100	Elbow	1521	1521	4.213	2455	3954	5227	9010	934	2772

Notes:
1) Operating pressure and temperature are 110 psi and 225°F. The design calculations were done for a design pressure of 110 psi.
2) Seismic OBE stresses are 1/2 the faulted DBE stress values.

Table A4-3B
Pipe Design Stress Summary for ECCS Piping - NPS 8
Various Lines – ECCS HPSI Train A

Node	Item	Operating σ_m (psi)	DW* (psi)	Upset σ_b (psi)	Faulted σ_b (psi)	Expansion σ_e (psi)
47	Elbow	1521	383	846	1230	2221
97X	Pipe	1521	68	1655	2904	2522
94	Reducer	1521	353	1671	2731	3750
97	Pipe	1521	36	1767	3285	3027
100	Elbow	1521	296	770	1173	2139
Max Envelop (psi)		**1521**	**383**	**1767**	**3285**	**3750**

APTECH
ENGINEERING ◘ SCIENCE ◘ TECHNOLOGY

Calculation No.: AES-C-7384-2	Made by: RCC	Date: 5/14/10	Client: SCE
Title: Allowable Through-Wall Flaws in ECCS Schedule 10s Piping at SONGS Units 2 & 3	Checked by: CQL	Date: 5/14/10	Project No.: AES-10027384-2Q
	Revision No.: 0	Document Control No.: I-2	Page No.: 50 of 101

A.5 ECCS HPSI Common (Line 1204ML009) and HPSI Train B (Line 1204ML008)

The allowable flaw lengths for the ECCS HPSI common and Train B (NPS 8) piping are calculated in Section A.5. Stress values were extracted from SCE summaries (Ref. 7, Attachments 3 and 4). The allowable flaw length results are given in Tables A5-1 and A5-2. The stress summaries used in the evaluation are given in Table A5-3 for the 8 NPS Schedule 10s piping.

Two material conditions were evaluated: flux-welded pipe by SAW or SMAW process, and TIG welded and wrought pipe. For the butt welds using SAW or SMAW, the following allowable flaw lengths were determined:

Table A5-1
Summary of Allowable Through-Wall Flaw Length Results
ECCS HPSI Common between MU010, MU011 and P018
HPSI Train B between MU009 and P019
(SAW and SMAW)

Line	Pipe Size	OD (in)	Loading Condition	Combined Stress Criteria (in)	Membrane Stress Criteria (in)	Allowable Length ℓ_{allow} (in)	% OD Circum.	Limiting Condition
1204ML009/ 008	8	8.625	Upset	3.26	15.31	**2.94**	10.8%	Faulted
			Faulted	2.94	17.45			

For TIG welds and wrought pipe, the following allowable flaw lengths were determined:

Table A5-2
Summary of Allowable Through-Wall Flaw Length Results
ECCS HPSI Common between MU010, MU011 and P018
HPSI Train B between MU009 and P019
(TIG and Wrought)

Line	Pipe Size	OD (in)	Loading Condition	Combined Stress Criteria (in)	Membrane Stress Criteria (in)	Allowable Length ℓ_{allow} (in)	% OD Circum.	Limiting Condition
1204ML009/ 008	8	8.625	Upset	7.34	16.42	**7.12**	26.3%	Faulted
			Faulted	7.12	18.35			

APTECH
ENGINEERING ⊠ SCIENCE ⊠ TECHNOLOGY

Calculation No.: AES-C-7384-2	Made by: RCC	Date: 5/14/10	Client: SCE
Title: Allowable Through-Wall Flaws in ECCS Schedule 10s Piping at SONGS Units 2 & 3	Checked by: CQL	Date: 5/14/10	Project No.: AES-10027384-2Q
	Revision No.: 0	Document Control No.: I-2	Page No.: 51 of 101

Table A5-3A
Pipe Design Stress Summary for ECCS Piping - NPS 8
Lines 1204ML009/008 - ECCS HPSI Common and Train B

Node	Item	Design P_m (psi)	Operating P_m (psi)	SIF (i)	ASME Section III Code Stresses					
					Eq. 8 (psi)	Eq. 9U (psi)	Eq. 9F (psi)	Eq. 10 (psi)	DW (psi)	DBE (psi)
370	-	1521	1521	4.209	3333	12704	18951	7857	1812	15618
445	-	1521	1521	4.209	3907	14311	21247	13556	2386	17340
451	-	1521	1521	1.0	4185	15351	22795	902	2664	18610
378	Pipe	1521	1521	1.0	1962	3387	4337	2382	441	2375
445	Elbow (LR)	1521	1521	4.209	2994	4837	6066	15595	1473	3072

Notes:
1) Operating pressure and temperature are 110 psi and 225°F. The design calculations were done for a design pressure of 110 psi.
2) Seismic OBE stresses are 3/5 the faulted DBE stress values.

Table A5-3B
Pipe Design Stress Summary for ECCS Piping - NPS 8
Lines 1204ML009/008 - ECCS HPSI Common and Train B

Node	Item	Operating σ_m (psi)	DW* (psi)	Upset σ_b (psi))	Faulted σ_b (psi)	Expansion σ_e (psi)
370	-	1521	574	3543	5522	1867
445	-	1521	756	4052	6249	3221
451	-	1521	2664	13830	21274	902
378	Pipe	1521	441	1866	2816	2382
445	Elbow (LR)	1521	467	1050	1440	3705
Max Envelop (psi)		**1521**	**2664**	**13830**	**21274**	**3705**

A.6 ECCS All Train A (Line 1204ML003)

The allowable flaw lengths for the ECCS Train A piping are calculated in Section A.6. Stress values were extracted from SCE summaries (Ref. 7, Attachment 6). The allowable flaw length results are given in Tables A6-1 and A6-2. The stress summaries used in the evaluation are given in Table A6-3 for the 24 NPS Schedule 10s piping.

Two material conditions were evaluated: flux-welded pipe by SAW or SMAW process, and TIG welded and wrought pipe. For the butt welds using SAW or SMAW, the following allowable flaw lengths were determined:

Table A6-1
Summary of Allowable Through-Wall Flaw Length Results
ECCS Train A between MU003 and HV9303, and HV9303 and Emergency Sump
(SAW and SMAW)

Line	Pipe Size	OD (in)	Loading Condition	Combined Stress Criteria (in)	Membrane Stress Criteria (in)	Allowable Length ℓ_{allow} (in)	% OD Circum.	Limiting Condition
1204ML003	24	24.00	Upset	11.17	34.53	**11.17**	14.8%	Upset
			Faulted	12.12	42.07			

For TIG welds and wrought pipe, the following allowable flaw lengths were determined:

Table A6-2
Summary of Allowable Through-Wall Flaw Length Results
ECCS Train A between MU003 and HV9303, and HV9303 and Emergency Sump
(TIG and Wrought)

Line	Pipe Size	OD (in)	Loading Condition	Combined Stress Criteria (in)	Membrane Stress Criteria (in)	Allowable Length ℓ_{allow} (in)	% OD Circum.	Limiting Condition
1204ML003	24	24.00	Upset	34.79	40.17	**34.79**	46.1%	Upset
			Faulted	35.89	46.57			

APTECH
ENGINEERING ◘ SCIENCE ◘ TECHNOLOGY

Calculation No.: AES-C-7384-2	Made by: RCC	Date: 5/14/10	Client: SCE
Title: Allowable Through-Wall Flaws in ECCS Schedule 10s Piping at SONGS Units 2 & 3	Checked by: CQL	Date: 5/14/10	Project No.: AES-10027384-2Q
	Revision No.: 0	Document Control No.: I-2	Page No.: 53 of 101

Table A6-3A
Pipe Design Stress Summary for ECCS Piping - NPS 24
Line 1204ML003 – ECCS Train A

Node	Item	Design P_m (psi)	Operating P_m (psi)	SIF (i)	ASME Section III Code Stresses					
					Eq. 8 (psi)	Eq. 9U (psi)	Eq. 9F (psi)	Eq. 10 (psi)	DW (psi)	DBE (psi)
10BB	-	2558	2558	5.635	2624	7482	11466	12678	66	8842
15E	-	2558	2558	5.635	4360	8295	11522	10325	1802	7162
20	-	2558	2558	1.0	3545	6548	9011	2887	987	5466
38	-	2558	2558	1.0	3774	4285	4705	1331	1216	931
44BB	-	2558	2558	5.635	3699	6048	7975	9860	1141	4276
45	-	2558	2558	6.211	3411	5838	7829	11324	853	4418
46E	-	2558	2558	5.635	2883	5644	7909	1407	325	5026
70	-	2558	2558	1.0	2871	4362	5585	14990	313	2714

Notes:
1) Operating pressure and temperature are 110 psi and 225°F. The design calculations were done for a design pressure of 110 psi.
2) Seismic OBE stresses are ~1/2 the faulted DBE stress values.

Table A6-3B
Pipe Design Stress Summary for ECCS Piping - NPS 24
Line 1204ML003 – ECCS Train A

Node	Item	Operating σ_m (psi)	DW* (psi)	Upset σ_b (psi))	Faulted σ_b (psi)	Expansion σ_e (psi)
10BB	-	2558	16	1165	2108	2250
15E	-	2558	426	1357	2121	1832
20	-	2558	987	3990	6453	2887
38	-	2558	1216	1727	2147	1331
44BB	-	2558	270	826	1282	1750
45	-	2558	183	704	1132	1823
46E	-	2558	77	730	1266	250
70	-	2558	313	1804	3027	14990
Max Envelop (psi)		**2558**	**1216**	**3990**	**6453**	**14990**

A.7 ECCS RWST (Lines 1219ML073 and 1219ML072)

The allowable flaw lengths for the ECCS RWST lines between T005 and MU075 (Line 1219ML073) and between T006 and MU074 (Line 1219ML072) are calculated in Section A.7. Stress values were extracted from SCE summaries (Ref. 7, Attachments 5 and 11). There was only one stress value reported for each line which was the location of highest code stress. With such a limited sample, this value was taken as the bounding stress for the piping, without the removal of the SIF. This will account for other pipe locations where the SIF could be lower.

The allowable flaw length results are given in Tables A7-1 and A7-2. The stress summaries used in the evaluation are given in Tables A7-3 and A7-4 for the 3 NPS Schedule 10s piping.

Two material conditions were evaluated: flux-welded pipe by SAW or SMAW process, and TIG welded and wrought pipe. For the butt welds using SAW or SMAW, the following allowable flaw lengths were determined:

Table A7-1
Summary of Allowable Through-Wall Flaw Length Results
ECCS RWST between T005 and MU075 and T006 and MU074
(SAW and SMAW)

Line	Pipe Size	OD (in)	Loading Condition	Combined Stress Criteria (in)	Membrane Stress Criteria (in)	Allowable Length ℓ_{allow} (in)	% OD Circum.	Limiting Condition
1204ML073	3	3.50	Upset	7.91	9.06	**7.89**	71.8%	Faulted
			Faulted	7.89	9.42			
1204ML072	3	3.50	Upset	7.91	9.06	**7.91**	71.8%	Faulted
			Faulted	7.91	9.42			

APTECH
ENGINEERING ◘ SCIENCE ◘ TECHNOLOGY

Calculation No.: AES-C-7384-2	Made by: RCC	Date: 5/14/10	Client: SCE
Title: Allowable Through-Wall Flaws in ECCS Schedule 10s Piping at SONGS Units 2 & 3	Checked by: CQL	Date: 5/14/10	Project No.: AES-10027384-2Q
	Revision No.: 0	Document Control No.: I-2	Page No.: 55 of 101

For TIG welds and wrought pipe, the following allowable flaw lengths were determined:

Table A7-2
Summary of Allowable Through-Wall Flaw Length Results
ECCS RWST between T005 and MU075 and T006 and MU074
(TIG and Wrought)

Line	Pipe Size	OD (in)	Loading Condition	Combined Stress Criteria (in)	Membrane Stress Criteria (in)	Allowable Length ℓ_{allow} (in)	% OD Circum.	Limiting Condition
1204ML073	3	3.50	Upset	8.37	9.22	**8.36**	76.0%	Faulted
			Faulted	8.36	9.55			
1204ML072	3	3.50	Upset	8.37	9.22	**8.37**	76.2%	Upset
			Faulted	8.38	9.55			

APTECH
ENGINEERING ◘ SCIENCE ◘ TECHNOLOGY

Calculation No.: AES-C-7384-2	Made by: RCC	Date: 5/14/10	Client: SCE
Title: Allowable Through-Wall Flaws in ECCS Schedule 10s Piping at SONGS Units 2 & 3	Checked by: CQL	Date: 5/14/10	Project No.: AES-10027384-2Q
	Revision No.: 0	Document Control No.: I-2	Page No.: 56 of 101

Table A7-3A
Pipe Design Stress Summary for ECCS Piping - NPS 3
Line 1219ML073 – RWST between T005 and MU075

Node	Item	Design P_m (psi)	Operating P_m (psi)	SIF (i)	ASME Section III Code Stresses					
					Eq. 8 (psi)	Eq. 9U (psi)	Eq. 9F (psi)	Eq. 10 (psi)	DW (psi)	DBE (psi)
-	-	165	99	1.9	361	683	1005	373	196	644

Notes:
1) Operating pressure and temperature are 15 psi and ambient. The design calculations were done for a design pressure of 25 psi.
2) Seismic OBE stresses are 1/2 the faulted DBE stress values.
3) Because of limited data, SIF is conservatively assumed to be 1.0 in all cases.

Table A7-3B
Pipe Design Stress Summary for ECCS Piping - NPS 3
Line 1219ML073 – RWST between T005 and MU075

Node	Item	Operating σ_m (psi)	DW* (psi)	Upset σ_b (psi))	Faulted σ_b (psi)	Expansion σ_e (psi)
-	-	99	196	584	906	373
Max Envelop (psi)		**99**	**196**	**584**	**906**	**373**

APTECH
ENGINEERING ⊠ SCIENCE ⊠ TECHNOLOGY

Calculation No.: AES-C-7384-2	Made by: RCC	Date: 5/14/10	Client: SCE
Title: Allowable Through-Wall Flaws in ECCS Schedule 10s Piping at SONGS Units 2 & 3	Checked by: CQL	Date: 5/14/10	Project No.: AES-10027384-2Q
	Revision No.: 0	Document Control No.: I-2	Page No.: 57 of 101

Table A7-4A
Pipe Design Stress Summary for ECCS Piping - NPS 3
Line 1219ML072 – RWST between T006 and MU074

Node	Item	Design P_m (psi)	Operating P_m (psi)	SIF (i)	ASME Section III Code Stresses					
					Eq. 8 (psi)	Eq. 9U (psi)	Eq. 9F (psi)	Eq. 10 (psi)	DW (psi)	DBE (psi)
7	-	165	99	1.9	373	678	983	373	208	610

Notes:
1) Operating pressure and temperature are 15 psi and ambient. The design calculations were done for a design pressure of 25 psi.
2) Seismic OBE stresses are 1/2 the faulted DBE stress values.
3) Because of limited data, SIF is conservatively assumed to be 1.0 in all cases.

Table A7-4B
Pipe Design Stress Summary for ECCS Piping - NPS 3
Line 1219ML072 – RWST between T006 and MU074

Node	Item	Operating σ_m (psi)	DW* (psi)	Upset σ_b (psi))	Faulted σ_b (psi)	Expansion σ_e (psi)
7	-	99	208	579	884	373
Max Envelop (psi)		**99**	**208**	**579**	**884**	**373**

APTECH
ENGINEERING ◘ SCIENCE ◘ TECHNOLOGY

Calculation No.: AES-C-7384-2	Made by: RCC	Date: 5/14/10	Client: SCE
Title: Allowable Through-Wall Flaws in ECCS Schedule 10s Piping at SONGS Units 2 & 3	Checked by: CQL	Date: 5/14/10	Project No.: AES-10027384-2Q
	Revision No.: 0	Document Control No.: I-2	Page No.: 58 of 101

A.8 ECCS RWST and All Train B (Lines 1204ML002, 004, 008)

The allowable flaw lengths for the RWST piping between T006 and HV9301, and Train B piping between HV9301 and MU002, are calculated in Section A.8. Stress values were extracted from SCE summaries (Ref. 7, Attachments 3 and 4). These data included the 24 NPS pipe from other line sections that were captured in the stress survey (see Table A1-1).

The allowable flaw length results are given in Tables A8-1 and A8-2. The stress summaries used in the evaluation are given in Table A8-3 for the 24 NPS Schedule 10s piping.

Two material conditions were evaluated: flux-welded pipe by SAW or SMAW process, and TIG welded and wrought pipe. For the butt welds using SAW or SMAW, the following allowable flaw lengths were determined:

Table A8-1
Summary of Allowable Through-Wall Flaw Length Results
RWST between T006 and HV9301 and
Train B between HV9301 and MU002
(SAW and SMAW)

Line	Pipe Size	OD (in)	Loading Condition	Combined Stress Criteria (in)	Membrane Stress Criteria (in)	Allowable Length ℓ_{allow} (in)	% OD Circum.	Limiting Condition
[Note 1]	24	24.00	Upset	17.22	34.53	**17.22**	22.8%	Upset
			Faulted	18.61	42.07			

Note 1: Lines 1204ML002, 004, 008

APTECH
ENGINEERING ◘ SCIENCE ◘ TECHNOLOGY

Calculation No.: AES-C-7384-2	Made by: RCC	Date: 5/14/10	Client: SCE
Title: Allowable Through-Wall Flaws in ECCS Schedule 10s Piping at SONGS Units 2 & 3	Checked by: CQL	Date: 5/14/10	Project No.: AES-10027384-2Q
	Revision No.: 0	Document Control No.: I-2	Page No.: 59 of 101

For TIG welds and wrought pipe, the following allowable flaw lengths were determined:

Table A8-2
Summary of Allowable Through-Wall Flaw Length Results
RWST between T006 and HV9301 and
Train B between HV9301 and MU002
(TIG and Wrought)

Line	Pipe Size	OD (in)	Loading Condition	Combined Stress Criteria (in)	Membrane Stress Criteria (in)	Allowable Length ℓ_{allow} (in)	% OD Circum.	Limiting Condition
[Note 1]	24	24.00	Upset	33.01	40.17	**33.01**	43.8%	Upset
			Faulted	34.42	46.57			

Note 1: Lines 1204ML002, 004, 008

APTECH
ENGINEERING ◘ SCIENCE ◘ TECHNOLOGY

Calculation No.: AES-C-7384-2	Made by: RCC	Date: 5/14/10	Client: SCE
Title: Allowable Through-Wall Flaws in ECCS Schedule 10s Piping at SONGS Units 2 & 3	Checked by: CQL	Date: 5/14/10	Project No.: AES-10027384-2Q
	Revision No.: 0	Document Control No.: I-2	Page No.: 60 of 101

Table A8-3A
Pipe Design Stress Summary for ECCS Piping - NPS 24
Various Lines – RWST and Train B

Node	Item	Design P_m (psi)	Operating P_m (psi)	SIF (i)	ASME Section III Code Stresses					
					Eq. 8 (psi)	Eq. 9U (psi)	Eq. 9F (psi)	Eq. 10 (psi)	DW (psi)	DBE (psi)
5	ANC	2558	2558	1.0	2669	4222	5258	3722	111	2589
20	-	2558	2558	1.0	3297	4627	5514	4592	739	2217
30	Elbow	2558	2558	5.635	3741	9395	13165	8797	1183	9424
40	Tee Run	2558	2558	4.396	3430	10103	14552	5704	872	11122
	Tee Branch	2558	2558	4.396	3155	11956	17226	4157	597	14071
85	-	2558	2558	4.396	3742	13559	20103	6837	1184	16361
88	-	2558	2558	1.0	3534	6469	8427	3806	976	4893
94	Tee Run	2558	2558	4.396	4505	12988	18643	17113	1947	14138
96	Reducer	2558	2558	2.0	6893	8854	7698	2131	4335	805
56	-	2558	2558	5.635	3330	8608	12127	5493	772	8797
58	-	2558	2558	7.384	3712	7327	9737	7541	1154	6025
61B	-	2558	2558	1.0	3562	7140	9525	1334	1004	5963
800	-	2558	2558	5.635	3067	5262	6725	7541	509	3658
810	-	2558	2558	1.0	3147	4754	5825	7541	589	2678
85	Tee Run	2558	2558	4.396	3742	13559	20103	6837	1184	16361
40	Tee (run)	2558	2558	4.396	2915	12775	19348	3769	357	16433
	Tee (run)	2558	2558	4.396	3128	10075	14707	1992	570	11579
	Tee (branch)	2558	2558	4.396	2777	10517	15677	4723	219	12900
93	Tee (run)	2558	2558	4.65	3488	9546	13585	8242	930	10097
	Tee (run)	2558	2558	4.65	3748	10258	14598	9323	1190	10850
	Tee (branch)	2558	2558	4.65	2943	10480	15506	6767	385	12563
56	Elbow (LR)	2558	2558	5.635	3727	9972	14135	10715	1169	10408
58	Elbow (SR)	2558	2558	7.38	3864	9013	12446	13299	1306	8582
63	Pipe	2558	2558	1.00	3597	7478	10065	1731	1039	6468
65	Pipe	2558	2558	1.00	3939	6893	8862	2855	1381	4923
67	Pipe	2558	2558	1.00	3003	6077	8126	5698	445	5123
85	Tee (run)	2558	2558	4.65	3029	17190	26631	3151	471	23602
	Tee (run)	2558	2558	4.65	3048	17238	26698	3409	490	23650
	Tee (branch)	2558	2558	4.65	3286	7106	9653	11454	728	6367
816	Elbow (LR)	2558	2558	5.635	3289	6541	8709	14710	731	5420

Notes:
1) Operating pressure and temperature are 15 psi and ambient. The design calculations were conservatively done for a pressure of 110 psi.
2) Seismic OBE stresses are 3/5 the faulted DBE stress values.

APTECH
ENGINEERING ⊠ SCIENCE ⊠ TECHNOLOGY

Calculation No.: AES-C-7384-2	Made by: RCC	Date: 5/14/10	Client: SCE
Title: Allowable Through-Wall Flaws in ECCS Schedule 10s Piping at SONGS Units 2 & 3	Checked by: CQL	Date: 5/14/10	Project No.: AES-10027384-2Q
	Revision No.: 0	Document Control No.: I-2	Page No.: 61 of 101

Table A8-3B
Pipe Design Stress Summary for ECCS Piping - NPS 24
Various Lines – RWST and Train B

Node	Item	Operating σ_m (psi)	DW* (psi)	Upset σ_b (psi))	Faulted σ_b (psi)	Expansion σ_e (psi)
5	ANC	2558	111	1664	2700	3722
20	-	2558	739	2069	2956	4592
30	Elbow	2558	280	1618	2510	1561
40	Tee Run	2558	264	2288	3638	1298
	Tee Branch	2558	181	2850	4449	946
85	-	2558	359	3337	5322	1555
88	-	2558	976	3911	5869	3806
94	Tee Run	2558	591	3163	4879	3893
96	Reducer	2558	2890	4197	3427	1066
56	-	2558	183	1432	2264	975
58	-	2558	208	861	1296	1021
61B	-	2558	1004	4582	6967	1334
800	-	2558	120	640	986	1338
810	-	2558	589	2196	3267	7541
85	Tee Run	2558	359	3337	5322	1555
40	Tee (run)	2558	108	3099	5093	857
	Tee (run)	2558	173	2280	3685	453
	Tee (branch)	2558	66	2414	3979	1074
93	Tee (run)	2558	267	2004	3162	1772
	Tee (run)	2558	341	2208	3452	2005
	Tee (branch)	2558	110	2272	3713	1455
56	Elbow (LR)	2558	277	1754	2739	1902
58	Elbow (SR)	2558	236	1166	1785	1801
63	Pipe	2558	1039	4920	7507	1731
65	Pipe	2558	1381	4335	6304	2855
67	Pipe	2558	445	3519	5568	5698
85	Tee (run)	2558	135	4196	6903	678
	Tee (run)	2558	141	4209	6922	733
	Tee (branch)	2558	209	1304	2034	2463
816	Elbow (LR)	2558	173	942	1455	2610
Max Envelop (psi)		**2558**	**2890**	**4920**	**7507**	**7541**

APTECH
ENGINEERING ◎ SCIENCE ◎ TECHNOLOGY

Calculation No.: AES-C-7384-2	Made by: RCC	Date: 5/14/10	Client: SCE
Title: Allowable Through-Wall Flaws in ECCS Schedule 10s Piping at SONGS Units 2 & 3	Checked by: CQL	Date: 5/14/10	Project No.: AES-10027384-2Q
	Revision No.: 0	Document Control No.: I-2	Page No.: 62 of 101

A.9 ECCS All Train B and CS Train B (Lines 1204ML109/004/031/008/010)

The allowable flaw lengths for the ECCS All Train B and CS Train B piping are calculated in Section A.9. Stress values were extracted from the SCE stress summaries (Ref. 7, Attachments 3 and 4). Piping that is listed as NPS 14 is not evaluated because it is not Schedule 10s size.

The allowable flaw length results are given in Tables A9-1 and A9-2. The stress summaries used in the evaluation are given in Table A9-3 through A9-4 for the 10 and 16 NPS Schedule 10s piping. The allowable flaw length results for the 24 NPS piping were provided in Section A.8.

Two material conditions were evaluated: flux-welded pipe by SAW or SMAW process, and TIG welded and wrought pipe. For the butt welds using SAW or SMAW, the following allowable flaw lengths were determined:

Table A9-1
Summary of Allowable Through-Wall Flaw Length Results
ECCS Train B between MU002, MU004 and MU009 and between MU011, MU005 and MU023
ECCS CS Train B between MU005 and P013
(SAW and SMAW)

Line	Pipe Size	OD (in)	Loading Condition	Combined Stress Criteria (in)	Membrane Stress Criteria (in)	Allowable Length ℓ_{allow} (in)	% OD Circum.	Limiting Condition
[Note 1]	10	10.75	Upset	13.03	18.41	**13.03**	38.6%	Upset
			Faulted	13.53	21.20			
[Note 1 & 2]	16	16.00	Upset	19.20	24.74	**19.20**	38.2%	Upset
			Faulted	20.69	29.41			

Notes:
1) Train B, Lines 1204ML109, 004, 031, 008, and 010.
2) CS Train B Line 1204ML004

APTECH
ENGINEERING ◘ SCIENCE ◘ TECHNOLOGY

Calculation No.: AES-C-7384-2	Made by: RCC	Date: 5/14/10	Client: SCE
Title: Allowable Through-Wall Flaws in ECCS Schedule 10s Piping at SONGS Units 2 & 3	Checked by: CQL	Date: 5/14/10	Project No.: AES-10027384-2Q
	Revision No.: 0	Document Control No.: I-2	Page No.: 63 of 101

For TIG welds and wrought pipe, the following allowable flaw lengths were determined:

Table A9-2
Summary of Allowable Through-Wall Flaw Length Results
ECCS Train B between MU002, MU004 and MU009 and between MU011, MU005 and MU023
ECCS CS Train B between MU005 and P013
(TIG and Wrought)

Line	Pipe Size	OD (in)	Loading Condition	Combined Stress Criteria (in)	Membrane Stress Criteria (in)	Allowable Length ℓ_{allow} (in)	% OD Circum.	Limiting Condition
[Note 1]	10	10.75	Upset	16.65	19.94	**16.65**	49.3%	Upset
			Faulted	17.17	22.44			
[Note 1 & 2]	16	16.00	Upset	25.53	27.73	**25.53**	50.8%	Upset
			Faulted	27.06	31.81			

Notes:
1) Train B, Lines 1204ML109, 004, 031, 008, and 010.
2) CS Train B Line 1204ML004

APTECH
ENGINEERING ⊠ SCIENCE ⊠ TECHNOLOGY

Calculation No.: AES-C-7384-2	Made by: RCC	Date: 5/14/10	Client: SCE
Title: Allowable Through-Wall Flaws in ECCS Schedule 10s Piping at SONGS Units 2 & 3	Checked by: CQL	Date: 5/14/10	Project No.: AES-10027384-2Q
	Revision No.: 0	Document Control No.: I-2	Page No.: 64 of 101

Table A9-3A
Pipe Design Stress Summary for ECCS Piping - NPS 10
Various Lines – Train B

Node	Item	Design P_m (psi)	Operating P_m (psi)	SIF (i)	ASME Section III Code Stresses					
					Eq. 8 (psi)	Eq. 9U (psi)	Eq. 9F (psi)	Eq. 10 (psi)	DW (psi)	DBE (psi)
85	Tee Branch	1710	1710	4.396	2445	8424	12410	10955	735	9965
358	-	1710	1710	1.0	2695	5671	7655	2922	985	4960
360	-	1710	1710	4.537	2827	9259	13547	13254	1117	10720
365	Tee Run	1710	1710	3.384	2958	9226	13405	6143	1248	10447
365	Tee Branch	1710	1710	3.384	2835	11087	16588	5109	1125	13753
358	Pipe	1710	1710	1.0	2398	3992	5055	2546	688	2657
360	Elbow (LR)	1710	1710	4.537	2544	5632	7691	13541	834	5147
365	Tee (run)	1710	1710	3.384	2626	5012	6603	3528	916	3977
-	Tee (run)	1710	1710	3.384	3125	5381	6885	7534	1415	3760
-	Tee Branch	1710	1710	3.384	2755	7145	10072	7663	1045	7317

Notes:
1) Operating pressure and temperature are 110 psi and 225°F. The design calculations were conservatively done for a pressure of 110 psi.
2) Seismic OBE stresses are 3/5 the faulted DBE stress values.

APTECH
ENGINEERING ◘ SCIENCE ◘ TECHNOLOGY

Calculation No.: AES-C-7384-2	Made by: RCC	Date: 5/14/10	Client: SCE
Title: Allowable Through-Wall Flaws in ECCS Schedule 10s Piping at SONGS Units 2 & 3	Checked by: CQL	Date: 5/14/10	Project No.: AES-10027384-2Q
	Revision No.: 0	Document Control No.: I-2	Page No.: 65 of 101

Table A9-3B
Pipe Design Stress Summary for ECCS Piping - NPS 10
Various Lines – Train B

Node	Item	Operating σ_m (psi)	DW* (psi)	Upset σ_b (psi))	Faulted σ_b (psi)	Expansion σ_e (psi)
85	Tee Branch	1710	223	2036	3245	2492
358	-	1710	985	3961	5945	2922
360	-	1710	328	2218	3479	2921
365	Tee Run	1710	492	2961	4608	1815
365	Tee Branch	1710	443	3695	5862	1510
358	Pipe	1710	688	2282	3345	2546
360	Elbow (LR)	1710	245	1153	1758	2985
365	Tee Run	1710	361	1301	1928	1043
	Tee Run	1710	558	1446	2039	2226
	Tee Branch	1710	412	2141	3295	2264
Max Envelop (psi)		**1710**	**985**	**3961**	**5945**	**2985**

APTECH
ENGINEERING ◘ SCIENCE ◘ TECHNOLOGY

Calculation No.: AES-C-7384-2	Made by: RCC	Date: 5/14/10	Client: SCE
Title: Allowable Through-Wall Flaws in ECCS Schedule 10s Piping at SONGS Units 2 & 3	Checked by: CQL	Date: 5/14/10	Project No.: AES-10027384-2Q
	Revision No.: 0	Document Control No.: I-2	Page No.: 66 of 101

Table A9-4A
Pipe Design Stress Summary for ECCS Piping - NPS 16
Various Lines – Train B

Node	Item	Design P_m (psi)	Operating P_m (psi)	SIF (i)	ASME Section III Code Stresses					
					Eq. 8 (psi)	Eq. 9U (psi)	Eq. 9F (psi)	Eq. 10 (psi)	DW (psi)	DBE (psi)
110	Elbow	2258	2258	5.191	6215	12828	17237	19229	3957	11022
112	-	2258	2258	1.0	2727	3448	3929	2299	469	1202
115	Elbow	2258	2258	5.191	4107	8380	11228	11745	1849	7121
115B-116	-	2258	2258	1.000	2733	3831	4562	1968	475	1829
120	Elbow	2258	2258	5.191	3603	7509	10114	8548	1345	6511
121	-	2258	2258	1.0	2608	4131	5146	2060	350	2538
138	Elbow	2258	2258	5.191	2853	5164	6705	8383	595	3852
139	Elbow	2258	2258	6.802	2727	4820	6214	12525	469	3487
139	Run	2258	2258	1.0	2351	2760	3034	1841	93	683
110	Elbow (LR)	2258	2258	5.191	2778	7607	10827	11261	520	8049
133	Pipe	2258	2258	1.0	2889	4206	5085	1869	631	2196
140	Elbow (SR)	2258	2258	6.802	6946	12268	15816	8350	4688	8870
171	Elbow (LR)	2258	2258	4.65	3523	10376	14945	4224	1265	11422

Notes:
1) Operating pressure and temperature are 110 psi and 225°F. The design calculations were conservatively done for a pressure of 110 psi.
2) Seismic OBE stresses are 3/5 the faulted DBE stress values.

APTECH
ENGINEERING ◘ SCIENCE ◘ TECHNOLOGY

Calculation No.: AES-C-7384-2	Made by: RCC	Date: 5/14/10	Client: SCE
Title: Allowable Through-Wall Flaws in ECCS Schedule 10s Piping at SONGS Units 2 & 3	Checked by: CQL	Date: 5/14/10	Project No.: AES-10027384-2Q
	Revision No.: 0	Document Control No.: I-2	Page No.: 67 of 101

Table A9-4B
Pipe Design Stress Summary for ECCS Piping - NPS 16
Various Lines – Train B

Node	Item	Operating σ_m (psi)	DW* (psi)	Upset σ_b (psi))	Faulted σ_b (psi)	Expansion σ_e (psi)
110	Elbow	2258	1016	2715	3847	3704
112	-	2258	469	1190	1671	2299
115	Elbow	2258	475	1572	2304	2263
115B-116	-	2258	475	1573	2304	1968
120	Elbow	2258	345	1349	2018	1647
121	-	2258	350	1873	2888	2060
138	Elbow	2258	153	746	1142	1615
139	Elbow	2258	92	502	775	1841
139	Run	2258	93	502	776	1841
110	Elbow (LR)	2258	134	1374	2201	2169
133	Pipe	2258	631	1948	2827	1869
140	Elbow (SR)	2258	919	1962	2658	1228
171	Elbow (LR)	2258	363	2328	3638	908
Max Envelop (psi)		**2258**	**1016**	**2715**	**3847**	**3704**

APTECH
ENGINEERING ◘ SCIENCE ◘ TECHNOLOGY

Calculation No.: AES-C-7384-2	Made by: RCC	Date: 5/14/10	Client: SCE
Title: Allowable Through-Wall Flaws in ECCS Schedule 10s Piping at SONGS Units 2 & 3	Checked by: CQL	Date: 5/14/10	Project No.: AES-10027384-2Q
	Revision No.: 0	Document Control No.: I-2	Page No.: 68 of 101

A.10 ECCS All Train B (Line 1204ML004)

The allowable flaw lengths for the ECCS Train B, Line 1204ML004 are calculated in Section A.10. Stress values were extracted from the SCE stress summaries (Ref. 7, Attachment 12). The allowable flaw length results are given in Tables A10-1 and A10-2. The stress summaries used in the evaluation are given in Table A10-3 for the 24 NPS Schedule 10s piping.

Two material conditions were evaluated: flux-welded pipe by SAW or SMAW process, and TIG welded and wrought pipe. For the butt welds using SAW or SMAW, the following allowable flaw lengths were determined:

Table A10-1
Summary of Allowable Through-Wall Flaw Length Results
ECCS All Train B Piping between MU004 and HV9302, and HV9302 and Emergency Sump
(SAW and SMAW)

Line	Pipe Size	OD (in)	Loading Condition	Combined Stress Criteria (in)	Membrane Stress Criteria (in)	Allowable Length ℓ_{allow} (in)	% OD Circum.	Limiting Condition
1204ML004	24	24.00	Upset	6.87	34.53	**6.87**	9.1%	Upset
			Faulted	11.50	42.07			

For TIG welds and wrought pipe, the following allowable flaw lengths were determined:

Table A10-2
Summary of Allowable Through-Wall Flaw Length Results
ECCS All Train B Piping between MU004 and HV9302, and HV9302 and Emergency Sump
(TIG and Wrought)

Line	Pipe Size	OD (in)	Loading Condition	Combined Stress Criteria (in)	Membrane Stress Criteria (in)	Allowable Length ℓ_{allow} (in)	% OD Circum.	Limiting Condition
1204ML004	24	24.00	Upset	21.06	40.17	**21.06**	27.9%	Upset
			Faulted	24.43	46.57			

APTECH
ENGINEERING ◘ SCIENCE ◘ TECHNOLOGY

Calculation No.: AES-C-7384-2	Made by: RCC	Date: 5/14/10	Client: SCE
Title: Allowable Through-Wall Flaws in ECCS Schedule 10s Piping at SONGS Units 2 & 3	Checked by: CQL	Date: 5/14/10	Project No.: AES-10027384-2Q
	Revision No.: 0	Document Control No.: I-2	Page No.: 69 of 101

Table A10-3A
Pipe Design Stress Summary for ECCS Piping - NPS 24
Line 1204ML004 – ECCS All Train B

Node	Item	Design P_m (psi)	Operating P_m (psi)	SIF (i)	ASME Section III Code Stresses					
					Eq. 8 (psi)	Eq. 9U (psi)	Eq. 9F (psi)	Eq. 10 (psi)	DW (psi)	DBE (psi)
10BB	-	2558	2558	5.635	4175	7355	10535	10426	1617	6360
15E	-	2558	2558	5.635	3945	6129	8313	7292	1387	4368
20	-	2558	2558	1.0	8277	12387	16497	3085	5719	8220
25	-	2558	2558	1.0	11264	14860	18456	2345	8706	7192
38	-	2558	2558	1.000	7828	9748	11668	2120	5270	3840
44BB	-	2558	2558	5.635	8672	12202	15732	12093	6114	7060
45	-	2558	2558	1.000	3426	4048	4670	2131	868	1244
46E	-	2558	2558	5.635	8965	13504	18043	1699	6407	9078
70	-	2558	2558	1.0	4565	6108	7651	15143	2007	3086

Notes:
1) Operating pressure and temperature are 110 psi and 225°F. The design calculations were conservatively done for a pressure of 110 psi.
2) Seismic OBE stresses are 1/2 the faulted DBE stress values.

APTECH
ENGINEERING ◘ SCIENCE ◘ TECHNOLOGY

Calculation No.: AES-C-7384-2	Made by: RCC	Date: 5/14/10	Client: SCE
Title: Allowable Through-Wall Flaws in ECCS Schedule 10s Piping at SONGS Units 2 & 3	Checked by: CQL	Date: 5/14/10	Project No.: AES-10027384-2Q
	Revision No.: 0	Document Control No.: I-2	Page No.: 70 of 101

Table A10-3B
Pipe Design Stress Summary for ECCS Piping - NPS 24
Line 1204ML004 – ECCS All Train B

Node	Item	Operating σ_m (psi)	DW* (psi)	Upset σ_b (psi))	Faulted σ_b (psi)	Expansion σ_e (psi)
10BB	-	2558	383	1135	1887	1850
15E	-	2558	328	845	1362	1294
20	-	2558	5719	9829	13939	3085
25	-	2558	8706	12302	15898	2345
38	-	2558	5270	7190	9110	2120
44BB	-	2558	1447	2282	3117	2146
45	-	2558	868	1490	2112	2131
46E	-	2558	1516	2590	3664	302
70	-	2558	2007	3550	5093	15143
Max Envelop (psi)		**2558**	**8706**	**12302**	**15898**	**2345 (see note)**

***Note:** The combination of worst case faulted plus expansion stress yielded an unacceptable result. It was determined by SCE that the stress for Node 25 was bounding to the other nodes and was therefore used in the calculation for the 24 NPS pipe (Ref. 10).

A.11 ECCS RWST Crosstie (Line 1219ML068)

The allowable flaw lengths for the ECCS RWST crosstie piping are calculated in Section A.11. Stress values were extracted from the SCE stress summaries (Ref. 7, Attachment 10). The allowable flaw length results are given in Tables A11-1 and A11-2. The stress summaries used in the evaluation are given in Table A11-3 for the 24 NPS Schedule 10s piping.

Two material conditions were evaluated: flux-welded pipe by SAW or SMAW process, and TIG welded and wrought pipe. For the butt welds using SAW or SMAW, the following allowable flaw lengths were determined:

Table A11-1
Summary of Allowable Through-Wall Flaw Length Results
ECCS RWST Crosstie Piping
(SAW and SMAW)

Line	Pipe Size	OD (in)	Loading Condition	Combined Stress Criteria (in)	Membrane Stress Criteria (in)	Allowable Length ℓ_{allow} (in)	% OD Circum.	Limiting Condition
1219ML068	24	24.00	Upset	41.74	54.12	**41.38**	54.9%	Faulted
			Faulted	41.38	57.98			

For TIG welds and wrought pipe, the following allowable flaw lengths were determined:

Table A11-2
Summary of Allowable Through-Wall Flaw Length Results
ECCS RWST Crosstie Piping
(TIG and Wrought)

Line	Pipe Size	OD (in)	Loading Condition	Combined Stress Criteria (in)	Membrane Stress Criteria (in)	Allowable Length ℓ_{allow} (in)	% OD Circum.	Limiting Condition
1219ML068	24	24.00	Upset	51.11	57.00	**50.79**	67.4%	Faulted
			Faulted	50.79	60.35			

APTECH
ENGINEERING ⊠ SCIENCE ⊠ TECHNOLOGY

Calculation No.: AES-C-7384-2	Made by: RCC	Date: 5/14/10	Client: SCE
Title: Allowable Through-Wall Flaws in ECCS Schedule 10s Piping at SONGS Units 2 & 3	Checked by: CQL	Date: 5/14/10	Project No.: AES-10027384-2Q
	Revision No.: 0	Document Control No.: I-2	Page No.: 72 of 101

Table A11-3A
Pipe Design Stress Summary for ECCS Piping - NPS 24
Line 1204ML068 – RWST Crosstie

Node	Item	Design P_m (psi)	Operating P_m (psi)	SIF (i)	ASME Section III Code Stresses					
					Eq. 8 (psi)	Eq. 9U (psi)	Eq. 9F (psi)	Eq. 10 (psi)	DW (psi)	DBE (psi)
30T-E	-	582	349	1.0	685	993	1301	304	103	616
24B-E	-	582	349	7.38	746	1586	2426	798	164	1680
26B-E	-	582	349	5.64	481	1058	1635	2284	-101	1154

Notes:
1) Operating pressure and temperature are 15 psi and ambient.
2) Seismic OBE stresses are 1/2 the faulted DBE stress values.
3) Because of limited data, SIF is conservatively assumed to be 1.0 in all cases.

Table A11-3B
Pipe Design Stress Summary for ECCS Piping - NPS 24
Line 1219ML068 – RWST Crosstie

Node	Item	Operating σ_m (psi)	DW* (psi)	Upset σ_b (psi))	Faulted σ_b (psi)	Expansion σ_e (psi)
30T-E	-	349	103	644	952	304
24B-E	-	349	164	1237	2077	798
26B-E	-	349	-101	709	1286	2284
Max Envelop (psi)		**349**	**164**	**1237**	**2077**	**2284**

A.12 ECCS Mini Flow Piping Downstream of Isolation Valves

The allowable flaw lengths for the ECCS Mini Flow piping downstream of the isolation valves were determined from the calculations described in Section A.12. Stress values were extracted from the SCE stress summaries (Ref. 7, Attachments 9 and 13). The allowable flaw length results are given in Tables A12-1 and A12-2. The stress summaries used in the evaluation are given in Tables A12-3 through A12-7 for the 2.5, 4, 6 and 10 NPS Schedule 10s piping.

Two material conditions were evaluated: flux-welded pipe by SAW or SMAW process, and TIG welded and wrought pipe. For the butt welds using SAW or SMAW, the following allowable flaw lengths were determined:

Table A12-1
Summary of Allowable Through-Wall Flaw Length Results
ECCS Mini Flow Piping Downstream of Isolation Valves
(SAW and SMAW)

Line	Pipe Size	OD (in)	Loading Condition	Combined Stress Criteria (in)	Membrane Stress Criteria (in)	Allowable Length ℓ_{allow} (in)	% OD Circum.	Limiting Condition
1204ML180	2.5	2.875	Upset	2.23	6.55	**1.65**	18.3%	Faulted
			Faulted	1.65	7.00			
1204ML131	4	4.5	Upset	6.16	10.11	**5.88**	41.6%	Faulted
			Faulted	5.88	10.84			
1204ML151	4	4.5	Upset	3.97	10.11	**3.68**	26.0%	Faulted
			Faulted	3.68	10.84			
1204ML080-	6	6.625	Upset	3.14	14.24	**2.60**	12.5%	Faulted
			Faulted	2.60	15.43			
1219ML107	10	10.75	Upset	10.39	21.90	**10.39**	30.8%	Upset
			Faulted	11.02	24.04			

APTECH
ENGINEERING ⊠ SCIENCE ⊠ TECHNOLOGY

Calculation No.: AES-C-7384-2	Made by: RCC	Date: 5/14/10	Client: SCE
Title: Allowable Through-Wall Flaws in ECCS Schedule 10s Piping at SONGS Units 2 & 3	Checked by: CQL	Date: 5/14/10	Project No.: AES-10027384-2Q
	Revision No.: 0	Document Control No.: I-2	Page No.: 74 of 101

For TIG welds and wrought pipe, the following allowable flaw lengths were determined:

Table A12-2
Summary of Allowable Through-Wall Flaw Length Results
ECCS Mini Flow Piping Downstream of Isolation Valves
(TIG and Wrought)

Line	Pipe Size	OD (in)	Loading Condition	Combined Stress Criteria (in)	Membrane Stress Criteria (in)	Allowable Length ℓ_{allow} (in)	% OD Circum.	Limiting Condition
1204ML180	2.5	2.875	Upset	3.48	6.74	**2.98**	33.0%	Faulted
			Faulted	2.98	7.16			
1204ML131	4	4.5	Upset	7.79	10.44	**7.50**	53.0%	Faulted
			Faulted	7.50	11.11			
1204ML151	4	4.5	Upset	6.43	10.44	**6.14**	43.5%	Faulted
			Faulted	6.14	11.11			
1204ML080	6	6.625	Upset	9.01	14.81	**8.49**	40.8%	Faulted
			Faulted	8.49	15.90			
1219ML107	10	10.75	Upset	16.00	23.07	**16.00**	47.4%	Upset
			Faulted	16.66	25.01			

Table A12-3A
Pipe Design Stress Summary for ECCS Piping - NPS 2.5
Line 1204ML180 – Between PSV9308 and Mini Flow Tie

Node	Item	Design P_m (psi)	Operating P_m (psi)	SIF (i)	ASME Section III Code Stresses					
					Eq. 8 (psi)	Eq. 9U (psi)	Eq. 9F (psi)	Eq. 10 (psi)	DW (psi)	DBE (psi)
250	tangent	394	394	2.806	2176	10116	18056	5309	1782	15880
255	elbow	394	394	2.349	1725	6046	10366	4973	1331	8641
260	-	394	394	1.9	809	2034	3258	3397	415	2449

Notes:
1) Operating pressure and temperature for NPS 2.5, 4 and 6 are 50 psi and 275°F, and 15 psi and ambient for NPS 10.
2) Seismic OBE stresses are 1/2 the faulted DBE stress values.
3) Because of limited data, SIF is conservatively assumed to be 1.0 in all cases.

Table A12-3B
Pipe Design Stress Summary for ECCS Piping - NPS 2.5
Line 1204ML180 – Between PSV9308 and Mini Flow Tie

Node	Item	Operating σ_m (psi)	DW* (psi)	Upset σ_b (psi))	Faulted σ_b (psi)	Expansion σ_e (psi)
250	tangent	394	1782	9722	17662	5309
255	elbow	394	1331	5652	9972	4973
260	-	394	415	1640	2864	3397
Max Envelop (psi)		**394**	**1782**	**9722**	**17662**	**5309**

APTECH
ENGINEERING ■ SCIENCE ■ TECHNOLOGY

Calculation No.: AES-C-7384-2	Made by: RCC	Date: 5/14/10	Client: SCE
Title: Allowable Through-Wall Flaws in ECCS Schedule 10s Piping at SONGS Units 2 & 3	Checked by: CQL	Date: 5/14/10	Project No.: AES-10027384-2Q
	Revision No.: 0	Document Control No.: I-2	Page No.: 76 of 101

Table A12-4A
Pipe Design Stress Summary for ECCS Piping - NPS 4
Line 1204ML131 – Between HV9347 and Mini Flow Tie

Node	Item	Design P_m (psi)	Operating P_m (psi)	SIF (i)	ASME Section III Code Stresses					
					Eq. 8 (psi)	Eq. 9U (psi)	Eq. 9F (psi)	Eq. 10 (psi)	DW (psi)	DBE (psi)
146	-	1511	432	2.0	2116	6244	10372	7002	605	8256
150	Elbow	1511	432	3.186	2442	8559	14677	11884	931	12235
160B	-	1511	432	1.0	1768	2970	4172	3128	257	2404
160	Elbow	1511	432	3.186	2229	6534	10839	12220	718	8610
160E	-	1511	432	1.0	1811	3613	5414	3835	300	3603
170B	-	1511	432	1.0	1854	2336	2819	3033	343	965
170	Elbow	1511	432	3.186	2330	3484	4637	9748	819	2307
175B	-	1511	432	1.0	1757	2681	3606	3465	246	1849
175	Elbow	1511	432	3.186	1667	4859	8040	12213	156	6373
176	Valve	1511	432	1.9	2487	5453	8418	6668	976	5931

Notes:
1) Operating pressure and temperature for NPS 2.5, 4 and 6 are 50 psi and 275°F, and 15 psi and ambient for NPS 10.
2) Seismic OBE stresses are 1/2 the faulted DBE stress values.

APTECH
ENGINEERING ◘ SCIENCE ◘ TECHNOLOGY

Calculation No.: AES-C-7384-2	Made by: RCC	Date: 5/14/10	Client: SCE
Title: Allowable Through-Wall Flaws in ECCS Schedule 10s Piping at SONGS Units 2 & 3	Checked by: CQL	Date: 5/14/10	Project No.: AES-10027384-2Q
	Revision No.: 0	Document Control No.: I-2	Page No.: 77 of 101

Table A12-4B
Pipe Design Stress Summary for ECCS Piping - NPS 4
Line 1204ML131 – Between HV9347 and Mini Flow Tie

Node	Item	Operating σ_m (psi)	DW* (psi)	Upset σ_b (psi))	Faulted σ_b (psi)	Expansion σ_e (psi)
146	-	432	403	3875	6627	3501
150	Elbow	432	390	3401	5961	3730
160B	-	432	257	2538	3740	3128
160	Elbow	432	300	2554	4355	3836
160E	-	432	300	3181	4982	3835
170B	-	432	343	1904	2387	3033
170	Elbow	432	343	1277	1760	3060
175B	-	432	246	2249	3174	3465
175	Elbow	432	65	1853	3184	3833
176	Valve	432	685	3524	5604	3509
Max Envelop (psi)		**432**	**685**	**3875**	**6627**	**3836**

APTECH
ENGINEERING ◘ SCIENCE ◘ TECHNOLOGY

Calculation No.: AES-C-7384-2	Made by: RCC	Date: 5/14/10	Client: SCE
Title: Allowable Through-Wall Flaws in ECCS Schedule 10s Piping at SONGS Units 2 & 3	Checked by: CQL	Date: 5/14/10	Project No.: AES-10027384-2Q
	Revision No.: 0	Document Control No.: I-2	Page No.: 78 of 101

Table A12-5A
Pipe Design Stress Summary for ECCS Piping - NPS 4
Line 1204ML151 – Between HV9306 and Mini Flow Tie

Node	Item	Design P_m (psi)	Operating P_m (psi)	SIF (i)	ASME Section III Code Stresses					
					Eq. 8 (psi)	Eq. 9U (psi)	Eq. 9F (psi)	Eq. 10 (psi)	DW (psi)	DBE (psi)
52	-	1511	432	1.8	1588	7732	13876	14722	77	12288
53	-	1511	432	1.8	1687	6384	11081	13064	176	9394
54AA	-	1511	432	1.0	1955	3356	4758	5676	444	2803
58	-	1511	432	1.0	2316	3439	4562	4506	805	2246
60B	-	1511	432	1.0	2016	3154	4291	4046	505	2275
60	Elbow	1511	432	3.186	2718	5437	8156	13942	1207	5438
60E	-	1511	432	1.0	1542	1812	2082	4207	31	540
63	-	1511	432	1.0	3043	7378	11713	2973	1532	8670

Notes:
1) Operating pressure and temperature for NPS 2.5, 4 and 6 are 50 psi and 275°F, and 15 psi and ambient for NPS 10.
2) Seismic OBE stresses are 1/2 the faulted DBE stress values.

Table A12-5B
Pipe Design Stress Summary for ECCS Piping - NPS 4
Line 1204ML151 – Between HV9306 and Mini Flow Tie

Node	Item	Operating σ_m (psi)	DW* (psi)	Upset σ_b (psi))	Faulted σ_b (psi)	Expansion σ_e (psi)
52	-	432	57	5407	9959	8179
53	-	432	130	4409	7888	7258
54AA	-	432	444	2924	4326	5676
58	-	432	805	3007	4130	4506
60B	-	432	505	2722	3859	4046
60	Elbow	432	505	2095	3232	4376
60E	-	432	31	1380	1650	4207
63	-	432	1532	6946	11281	2973
Max Envelop (psi)		**432**	**1532**	**6946**	**11281**	**8179**

APTECH
ENGINEERING ◘ SCIENCE ◘ TECHNOLOGY

Calculation No.: AES-C-7384-2	Made by: RCC	Date: 5/14/10	Client: SCE
Title: Allowable Through-Wall Flaws in ECCS Schedule 10s Piping at SONGS Units 2 & 3	Checked by: CQL	Date: 5/14/10	Project No.: AES-10027384-2Q
	Revision No.: 0	Document Control No.: I-2	Page No.: 79 of 101

Table A12-6A
Pipe Design Stress Summary for ECCS Piping - NPS 6
Line 1204ML080 – Between MU060 and MU068

Node	Item	Design P_m (psi)	Operating P_m (psi)	SIF (i)	ASME Section III Code Stresses					
					Eq. 8 (psi)	Eq. 9U (psi)	Eq. 9F (psi)	Eq. 10 (psi)	DW (psi)	DBE (psi)
20	Elbow	2033	581	3.817	2095	8475	14855	10596	62	12760
100	Elbow	2033	581	3.817	2904	4218	5532	20640	871	2628
46	1" Branch	2033	581	3.4	2459	3108	3757	9504	426	1298
900	Anchor	2033	581	1.0	2715	3513	4311	16083	682	1596
920	Pipe	2033	581	1.0	2378	2867	3356	14001	345	978
60A	Pipe	2033	581	1.0	2265	3448	4632	9061	232	2367
40	3-Way Rest.	2033	581	1.0	3354	7478	11601	5481	1321	8247
5	-	2033	581	1.0	2640	4832	7024	2475	607	4384
10B	-	2033	581	1.0	2175	2778	3381	3246	142	1206
10	Elbow	2033	581	3.817	2440	4167	5894	13217	407	3454
10E	-	2033	581	1.0	2149	2701	3252	3085	116	1103
12	-	2033	581	4.78	2695	6857	11018	13099	662	8323
15B	-	2033	581	1.0	2183	3497	4810	3260	150	2627
15	Elbow	2033	581	3.817	2462	6223	9984	13968	429	7522
15E	-	2033	581	1.0	2155	3188	4221	3476	122	2066
16B	-	2033	581	1.0	2173	2837	3501	2880	140	1328
16	Elbow	2033	581	3.817	2562	5454	8345	10994	529	5783
16E	-	2033	581	1.0	2218	3228	4238	2316	185	2020
18	-	2033	581	1.0	3035	4840	6645	2217	1002	3610
21	-	2033	581	1.0	2359	4997	7635	4449	326	5276
25B	-	2033	581	1.0	2179	3195	4211	685	146	2032
25	Elbow	2033	581	3.817	2499	7715	12931	9004	466	10432
25E	-	2033	581	1.0	2195	4018	5840	2359	162	3645
28	-	2033	581	1.0	3159	8182	13205	4704	1126	10046
35B	-	2033	581	1.0	2166	3051	3935	2694	133	1769
35	Elbow	2033	581	3.817	2476	5373	8271	13878	443	5795
35E	-	2033	581	1.0	2187	3200	4212	3315	154	2025
50	Tee	2033	581	2.806	3046	8964	14882	23362	1013	11836
50A	-	2033	581	1.0	2450	4902	7354	7864	417	4904
140	Tee	2033	581	2.806	2794	7385	11976	23202	761	9182
Special Cases: Away from Butt Weld										
85	Guide	2033	581	1.0	4094	5943	7793	19925	2061	3699

Notes:
1) Operating pressure and temperature for NPS 2.5, 4 and 6 are 50 psi and 275°F, and 15 psi and ambient for NPS 10.
2) Seismic OBE stresses are 1/2 the faulted DBE stress values.

APTECH
ENGINEERING ◘ SCIENCE ◘ TECHNOLOGY

Calculation No.: AES-C-7384-2	Made by: RCC	Date: 5/14/10	Client: SCE
Title: Allowable Through-Wall Flaws in ECCS Schedule 10s Piping at SONGS Units 2 &3	Checked by: CQL	Date: 5/14/10	Project No.: AES-10027384-2Q
	Revision No.: 0	Document Control No.: I-2	Page No.: 80 of 101

Table A12-6B
Pipe Design Stress Summary for ECCS Piping - NPS 6
Line 1204ML080 – Between MU060 and MU068

Node	Item	Operating σ_m (psi)	DW* (psi)	Upset σ_b (psi))	Faulted σ_b (psi)	Expansion σ_e (psi)
20	Elbow	581	22	2757	4986	2776
100	Elbow	581	304	1270	1729	5407
46	1" Branch	581	167	991	1245	2795
900	Anchor	581	682	2932	3730	16083
920	Pipe	581	345	2286	2775	14001
60A	Pipe	581	232	2867	4051	9061
40	3-Way Rest.	581	1321	6897	11020	5481
5	-	581	607	4251	6443	2475
10B	-	581	142	2197	2800	3246
10	Elbow	581	142	1253	1856	3463
10E	-	581	116	2120	2671	3085
12	-	581	185	1751	2911	2740
15B	-	581	150	2916	4229	3260
15	Elbow	581	150	1971	3285	3659
15E	-	581	122	2607	3640	3476
16B	-	581	140	2256	2920	2880
16	Elbow	581	185	1702	2712	2880
16E	-	581	185	2647	3657	2316
18	-	581	1002	4259	6064	2217
21	-	581	326	4416	7054	4449
25B	-	581	146	2614	3630	685
25	Elbow	581	163	2492	4314	2359
25E	-	581	162	3437	5259	2359
28	-	581	1126	7601	12624	4704
35B	-	581	133	2470	3354	2694
35	Elbow	581	155	1674	2686	3636
35E	-	581	154	2619	3631	3315
50	Tee	581	481	3983	6795	8326
50A	-	581	417	4321	6773	7864
140	Tee	581	362	3233	5415	8269
Max Envelop (psi)		**581**	**1321**	**7601**	**12624**	**16083**

APTECH
ENGINEERING ◘ SCIENCE ◘ TECHNOLOGY

Calculation No.: AES-C-7384-2	Made by: RCC	Date: 5/14/10	Client: SCE
Title: Allowable Through-Wall Flaws in ECCS Schedule 10s Piping at SONGS Units 2 & 3	Checked by: CQL	Date: 5/14/10	Project No.: AES-10027384-2Q
	Revision No.: 0	Document Control No.: I-2	Page No.: 81 of 101

Table A12-7A
Pipe Design Stress Summary for ECCS Piping - NPS 10
Line 1219ML107 – Between MU068 and T005

Node	Item	Design P_m (psi)	Operating P_m (psi)	SIF (i)	ASME Section III Code Stresses					
					Eq. 8 (psi)	Eq. 9U (psi)	Eq. 9F (psi)	Eq. 10 (psi)	DW (psi)	DBE (psi)
220	3/4" Branch	2720	777	4.1	8428	14432	20435	5217	5708	12007
230	Elbow	2720	777	4.55	5859	8721	11583	3232	3139	5724
250	Elbow	2720	777	4.55	3910	5709	7507	14205	1190	3597
247	3/4" Branch	2720	777	4.1	4657	6789	8921	11975	1937	4264
213	Taper	2720	777	1.9	5371	8260	11149	1247	2651	5778
210	Taper	2720	777	1.9	3541	5204	6867	885	821	3326
190	Reducer	2720	777	2.0	4303	6580	8857	6545	1583	4554
215	Axial Restr.	2720	777	1.0	4597	6618	8639	805	1877	4042
258	Side Restr.	2720	777	1.0	2888	4011	5134	6496	168	2246

Notes:
1) Operating pressure and temperature for NPS 2.5, 4 and 6 are 50 psi and 275°F, and 15 psi and ambient for NPS 10.
2) Seismic OBE stresses are 1/2 the faulted DBE stress values.

Table A12-7B
Pipe Design Stress Summary for ECCS Piping - NPS 10
Line 1219ML107 – Between MU068 and T005

Node	Item	Operating σ_m (psi)	DW* (psi)	Upset σ_b (psi))	Faulted σ_b (psi)	Expansion σ_e (psi)
220	3/4" Branch	777	1856	4441	6393	1272
230	Elbow	777	920	2328	3167	710
250	Elbow	777	349	1445	1972	3122
247	3/4" Branch	777	630	1955	2648	2921
213	Taper	777	1860	5251	7279	656
210	Taper	777	576	3107	4274	466
190	Reducer	777	1055	3869	5387	3273
215	Axial Restr.	777	1877	5841	7862	805
258	Side Restr.	777	168	3234	4357	6496
Max Envelop (psi)		**777**	**1877**	**5841**	**7862**	**6496**

A.13 CVCS RWST between T006 and MU067 (Line 1219ML057)

The allowable flaw lengths for the CVCS RWST piping are calculated in Section A.13. Stress values were extracted from the SCE stress summaries (Ref. 7, Attachment 8). The allowable flaw length results are given in Tables A13-1 and A13-2. The stress summaries used in the evaluation are given in Table A13-3 for the 6 NPS Schedule 10s piping.

Two material conditions were evaluated: flux-welded pipe by SAW or SMAW process, and TIG welded and wrought pipe. For the butt welds using SAW or SMAW, the following allowable flaw lengths were determined:

Table A13-1
Summary of Allowable Through-Wall Flaw Length Results
CVCS RWST between T006 and MU067
(SAW and SMAW)

Line	Pipe Size	OD (in)	Loading Condition	Combined Stress Criteria (in)	Membrane Stress Criteria (in)	Allowable Length ℓ_{allow} (in)	% OD Circum.	Limiting Condition
1219ML057	6	6.625	Upset	6.97	16.38	**6.97**	33.5%	Upset
			Faulted	7.17	17.19			

For TIG welds and wrought pipe, the following allowable flaw lengths were determined:

Table A13-2
Summary of Allowable Through-Wall Flaw Length Results
CVCS RWST between T006 and MU067
(TIG and Wrought)

Line	Pipe Size	OD (in)	Loading Condition	Combined Stress Criteria (in)	Membrane Stress Criteria (in)	Allowable Length ℓ_{allow} (in)	% OD Circum.	Limiting Condition
1219ML057	6	6.625	Upset	14.06	16.77	**14.06**	67.6%	Upset
			Faulted	14.53	17.51			

APTECH
ENGINEERING ◘ SCIENCE ◘ TECHNOLOGY

Calculation No.: AES-C-7384-2	Made by: RCC	Date: 5/14/10	Client: SCE
Title: Allowable Through-Wall Flaws in ECCS Schedule 10s Piping at SONGS Units 2 & 3	Checked by: CQL	Date: 5/14/10	Project No.: AES-10027384-2Q
	Revision No.: 0	Document Control No.: I-2	Page No.: 83 of 101

Table A13-3A
Pipe Design Stress Summary for ECCS Piping - NPS 6
Line 1219ML057 – CVCS RWST between T006 and MU067

Node	Item	Design P_m (psi)	Operating P_m (psi)	SIF (i)	ASME Section III Code Stresses					
					Eq. 8 (psi)	Eq. 9U (psi)	Eq. 9F (psi)	Eq. 10 (psi)	DW (psi)	DBE (psi)
5	-	174	174	1.0	607	706	805	12179	433	198
10BM	-	174	174	3.82	256	406	556	8152	82	300
55BE	-	174	174	3.82	320	418	516	9184	146	196
60BB	-	174	174	3.82	277	341	405	7533	103	128
110TE	-	174	174	1.0	700	884	1068	15252	526	368
120TE	-	174	174	1.0	795	880	965	13766	621	170
125TE	-	174	174	1.0	730	873	1016	13409	556	286
130TE	-	174	174	1.0	898	1152	1406	14046	724	508
135BM	-	174	174	3.82	362	529	796	14620	188	434
145BB	-	174	174	3.82	1056	1437	1818	14074	882	762
150TE	-	174	174	1.0	1416	1702	1988	7255	1242	572
180BE	-	174	174	3.82	508	1152	1796	833	334	1288

Notes:
1) Operating pressure and temperature are 15 psi and ambient.
2) Seismic OBE stresses are 1/2 the faulted DBE stress values.

APTECH
ENGINEERING ◘ SCIENCE ◘ TECHNOLOGY

Calculation No.: AES-C-7384-2	Made by: RCC	Date: 5/14/10	Client: SCE
Title: Allowable Through-Wall Flaws in ECCS Schedule 10s Piping at SONGS Units 2 & 3	Checked by: CQL	Date: 5/14/10	Project No.: AES-10027384-2Q
	Revision No.: 0	Document Control No.: I-2	Page No.: 84 of 101

Table A13-3B
Pipe Design Stress Summary for ECCS Piping - NPS 6
Line 1219ML057 – CVCS RWST between T006 and MU067

Node	Item	Operating σ_m (psi)	DW* (psi)	Upset σ_b (psi))	Faulted σ_b (psi)	Expansion σ_e (psi)
5	-	174	433	532	631	12179
10BM	-	174	29	81	133	2134
55BE	-	174	51	85	119	2404
60BB	-	174	36	58	81	1972
110TE	-	174	526	710	894	15252
120TE	-	174	621	706	791	13766
125TE	-	174	556	699	842	13409
130TE	-	174	724	978	1232	14046
135BM	-	174	66	124	217	3827
145BB	-	174	308	441	574	3684
150TE	-	174	1242	1528	1814	7255
180BE	-	174	117	341	566	218
Max Envelop (psi)		**174**	**1242**	**1528**	**1814**	**15252**

APTECH
ENGINEERING ◘ SCIENCE ◘ TECHNOLOGY

Calculation No.: AES-C-7384-2	Made by: RCC	Date: 5/14/10	Client: SCE
Title: Allowable Through-Wall Flaws in ECCS Schedule 10s Piping at SONGS Units 2 & 3	Checked by: CQL	Date: 5/14/10	Project No.: AES-10027384-2Q
	Revision No.: 0	Document Control No.: I-2	Page No.: 85 of 101

A.14 SFP RWST between T006 and MU070 (Line 1219ML066)

The allowable flaw lengths for the SFP RWST piping are calculated in Section A.14. Stress values were extracted from the SCE stress summaries (Ref. 7, Attachment 7). The allowable flaw length results are given in Tables A14-1 and A14-2. The stress summaries used in the evaluation are given in Tables A14-3 and A14-4 for the 3 and 4 NPS Schedule 10s piping.

Two material conditions were evaluated: flux-welded pipe by SAW or SMAW process, and TIG welded and wrought pipe. For the butt welds using SAW or SMAW, the following allowable flaw lengths were determined:

Table A14-1
Summary of Allowable Through-Wall Flaw Length Results
SFP RWST between T006 and MU070
(SAW and SMAW)

Line	Pipe Size	OD (in)	Loading Condition	Combined Stress Criteria (in)	Membrane Stress Criteria (in)	Allowable Length ℓ_{allow} (in)	% OD Circum.	Limiting Condition
1219ML066	3	3.50	Upset	5.61	9.07	**5.06**	46.0%	Faulted
			Faulted	5.06	9.42			
1219ML066	4	4.50	Upset	5.13	11.42	**4.89**	34.6%	Faulted
			Faulted	4.89	11.92			

For TIG welds and wrought pipe, the following allowable flaw lengths were determined:

Table A14-2
Summary of Allowable Through-Wall Flaw Length Results
SFP RWST between T006 and MU070
(TIG and Wrought)

Line	Pipe Size	OD (in)	Loading Condition	Combined Stress Criteria (in)	Membrane Stress Criteria (in)	Allowable Length ℓ_{allow} (in)	% OD Circum.	Limiting Condition
1219ML066	3	3.50	Upset	6.18	9.23	**5.68**	51.6%	Faulted
			Faulted	5.68	9.55			
1219ML066	4	4.50	Upset	8.34	11.65	**8.02**	56.7%	Faulted
			Faulted	8.02	12.10			

APTECH
ENGINEERING ◘ SCIENCE ◘ TECHNOLOGY

Calculation No.: AES-C-7384-2	Made by: RCC	Date: 5/14/10	Client: SCE
Title: Allowable Through-Wall Flaws in ECCS Schedule 10s Piping at SONGS Units 2 & 3	Checked by: CQL	Date: 5/14/10	Project No.: AES-10027384-2Q
	Revision No.: 0	Document Control No.: I-2	Page No.: 86 of 101

Table A14-3A
Pipe Design Stress Summary for ECCS Piping - NPS 3
Line 1219ML066 – SFP RWST between T006 and MU070

Node	Item	Design P_m (psi)	Operating P_m (psi)	SIF (i)	ASME Section III Code Stresses					
					Eq. 8 (psi)	Eq. 9U (psi)	Eq. 9F (psi)	Eq. 10 (psi)	DW (psi)	DBE (psi)
53	-	163	98	2.0	505	4132	7759	357	342	7254

Notes:
1) Operating pressure and temperature are 15 psi and ambient.
2) Seismic OBE stresses are 1/2 the faulted DBE stress values.
3) Because of limited data, SIF is conservatively assumed to be 1.0 in all cases.

Table A14-3B
Pipe Design Stress Summary for ECCS Piping - NPS 3
Line 1219ML066 – SFP RWST between T006 and MU070

Node	Item	Operating σ_m (psi)	DW* (psi)	Upset σ_b (psi))	Faulted σ_b (psi)	Expansion σ_e (psi)
53	-	98	342	4034	7661	357
Max Envelop (psi)		**98**	**342**	**4034**	**7661**	**357**

APTECH
ENGINEERING ◘ SCIENCE ◘ TECHNOLOGY

Calculation No.: AES-C-7384-2	Made by: RCC	Date: 5/14/10	Client: SCE
Title: Allowable Through-Wall Flaws in ECCS Schedule 10s Piping at SONGS Units 2 & 3	Checked by: CQL	Date: 5/14/10	Project No.: AES-10027384-2Q
	Revision No.: 0	Document Control No.: I-2	Page No.: 87 of 101

Table A14-4A
Pipe Design Stress Summary for ECCS Piping - NPS 4
Line 1219ML066 – SFP RWST between T006 and MU070

Node	Item	Design P_m (psi)	Operating P_m (psi)	SIF (i)	ASME Section III Code Stresses					
					Eq. 8 (psi)	Eq. 9U (psi)	Eq. 9F (psi)	Eq. 10 (psi)	DW (psi)	DBE (psi)
32	-	215	129	4.048	1190	3414	5692	10316	975	4502
710	-	215	129	1.0	874	2347	3851	3474	659	2977

Notes:
1) Operating pressure and temperature are 15 psi and ambient.
2) Seismic OBE stresses are 1/2 the faulted DBE stress values.
3) Because of limited data, SIF is conservatively assumed to be 1.0 in all cases.

Table A14-4B
Pipe Design Stress Summary for ECCS Piping - NPS 4
Line 1219ML066 – SFP RWST between T006 and MU070

Node	Item	Operating σ_m (psi)	DW* (psi)	Upset σ_b (psi))	Faulted σ_b (psi)	Expansion σ_e (psi)
32	-	129	975	3285	5563	10316
710	-	129	659	2218	3722	3474
Max Envelop (psi)		**129**	**975**	**3285**	**5563**	**10316**

APTECH
ENGINEERING ◘ SCIENCE ◘ TECHNOLOGY

Calculation No.: AES-C-7384-2	Made by: RCC	Date: 5/14/10	Client: SCE
Title: Allowable Through-Wall Flaws in ECCS Schedule 10s Piping at SONGS Units 2 & 3	Checked by: CQL	Date: 5/14/10	Project No.: AES-10027384-2Q
	Revision No.: 0	Document Control No.: I-2	Page No.: 88 of 101

Appendix B

ECCS Schedule 10s Process and Instrumentation Diagrams

The process and instrumentation diagrams (P&IDs) for the ECCS Schedule 10s piping are listed in Table B-1. Also listed are the calculations numbers for some of the subsystems. A summary listing of the P&ID references is given in Table B-2. Copies of the P&IDs (Ref. 8) follow at the end of this appendix.

APTECH
ENGINEERING ◎ SCIENCE ◎ TECHNOLOGY

Calculation No.: AES-C-7384-2	Made by: RCC	Date: 5/14/10	Client: SCE
Title: Allowable Through-Wall Flaws in ECCS Schedule 10s Piping at SONGS Units 2 & 3	Checked by: CQL	Date: 5/14/10	Project No.: AES-10027384-2Q
	Revision No.: 0	Document Control No.: I-2	Page No.: 89 of 101

Table B-1
Summary of ECCS Subsystem Descriptions and P&ID Reference

	Subsystem	Line	Section Description	P&ID	High Energy Line
1	RWST	1204ML001	Between T005 & HV9300	40112A Rev 35 40112ASO3 Rev 38 40122B Rev 26 40122BSO3 Rev 21	No
2	ALL TRAIN A	1204ML001	Between HV9300 & MU001	40112A Rev 35 40112ASO3 Rev 38	No
3	ALL TRAIN A	1204ML108/003/ 007/009	Bounded by Valves MU001, MU003, MU007, MU010, and MU062	40112A Rev 35 40112ASO3 Rev 38 40112B Rev 36 40112BSO3 Rev 37	Yes
4	HPSI TRAIN A	1204ML007	Between MU007 & P017	40112A Rev 35 40112ASO3 Rev 38	Yes
5	HPSI COMMON	1204ML009	Between MU010, MU011& P018	40112A Rev 35 40112ASO3 Rev 38	Yes
6	ALL TRAIN A	1204ML003.	Between MU003 & HV9303	40112A Rev 35 40112ASO3 Rev 38	Yes
7	ALL TRAIN A	1204ML003	Between HV9303 and Emergency Sump	40112A Rev 35 40112ASO3 Rev 38	Yes
8	LPSI TRAIN A	1204ML032	Between "T" of Line ML003 and P015	40112B Rev 36 40112BSO3 Rev 37	Yes
9	CS TRAIN A	1204ML003	Between MU062 & P012	40112A Rev 35 40112ASO3 Rev 38 40114A Rev 15 40114ASO3 Rev 15	Yes
10	RWST	1219ML073	Between T005 & MU075	40122B Rev 26 40122BSO3 Rev 21	No
11	RWST	1204ML002	Between T006 & HV9301	40112A Rev 35 40112ASO3 Rev 38 40122B Rev 26 40122BSO3 Rev 21	No
12	ALL TRAIN B	1204ML002	Between HV9301 & MU002	40112A Rev 35 40112ASO3 Rev 38	No
13	ALL TRAIN B	1204ML109/004/ 031/008/010	Bounded by Valves MU002, MU004, MU009, MU011, MU005, and MU199	40112A Rev 35 40112ASO3 Rev 38 40112B Rev 36 40112BSO3 Rev 37	Yes
14	HPSI TRAIN B	1204ML008	Between MU009 and P019	40112A Rev 35 40112ASO3 Rev 38	Yes
15	ALL TRAIN B	1204ML004	Between MU004 & HV9302	40112A Rev 35 40112ASO3 Rev 38	Yes
16	ALL TRAIN B	1204ML004	Between HV9302 and Emergency Sump	40112A Rev 35 40112ASO3 Rev 38	Yes
17	LPSI TRAIN B	1204ML033	Between MU199 and P016	-	Yes
18	CS TRAIN B	1204ML004	Between MU005 & P013	40112A Rev 35 40112ASO3 Rev 38 40114A Rev 15 40114ASO3 Rev 15	Yes
19	RWST	1219ML072	Between T006 & MU074	40122B Rev 26 40122BSO3 Rev 21	No

Table B-1
Summary of ECCS Subsystem Descriptions and P&ID Reference (Cont'd)

	Subsystem	Line	Section Description	P&ID	High Energy Line
20	RWST	1219ML068	RWST Crosstie	40122B Rev 26 40122BSO3 Rev 21	No
21	MINIFLOW	1204ML131	Between HV9347 & mini flow tie	40114D Rev 20 40114DSO3 Rev 19	Yes
22	MINIFLOW	1204ML151	Between HV9306 & mini flow tie	40114D Rev 20 40114DSO3 Rev 19	Yes
23	MINIFLOW	1204ML180	Between PSV9308 & mini flow tie	40114D Rev 20 40114DSO3 Rev 19	Yes
24	MINIFLOW	1204ML080	Between Valves MU060 & MU068	40114D Rev 20 40114DSO3 Rev 19 40122B Rev 26 40122BSO3 Rev 21	Yes
25	MINIFLOW	1219ML107	Between Valves MU068 and T005	40122B Rev 26 40122BSO3 Rev 21	No
26	RWST	1219ML057	Between T006 & MU067 (gravity feed to charging)	40122B Rev 26 40122BSO3 Rev 21	No
27	RWST	1219ML066	Between T006 & MU070 (to SFP make up pump)	40122B Rev 26 40122BSO3 Rev 21	No

Note: Items 8 and 17 are not evaluated because the piping is Schedule 20

Table B-2
Summary of P&ID References

1. P&ID 40112A, Rev 35, Safety Injection System – System No. 1204
2. P&ID 40112ASO3, Rev 38, Safety Injection System – System No. 1204
3. P&ID 40122B, Rev 26, Fuel Pool Cooling System – System No. 1219
4. P&ID 40122BSO3, Rev 21, Fuel Pool Cooling System – System No. 1219
5. P&ID 40112B, Rev 36, Safety Injection System – System No. 1204
6. P&ID 40112BSO3, Rev 37, Safety Injection System – System No. 1204
7. P&ID 40114A, Rev 15, Containment Spray System – System No. 1206
8. P&ID 40114ASO3, Rev 15, Containment Spray System – System No. 1206
9. P&ID 40114D, Rev 20, Containment Spray System – System No. 1206
10. P&ID 40114DSO3, Rev 19, Containment Spray System – System No. 1206

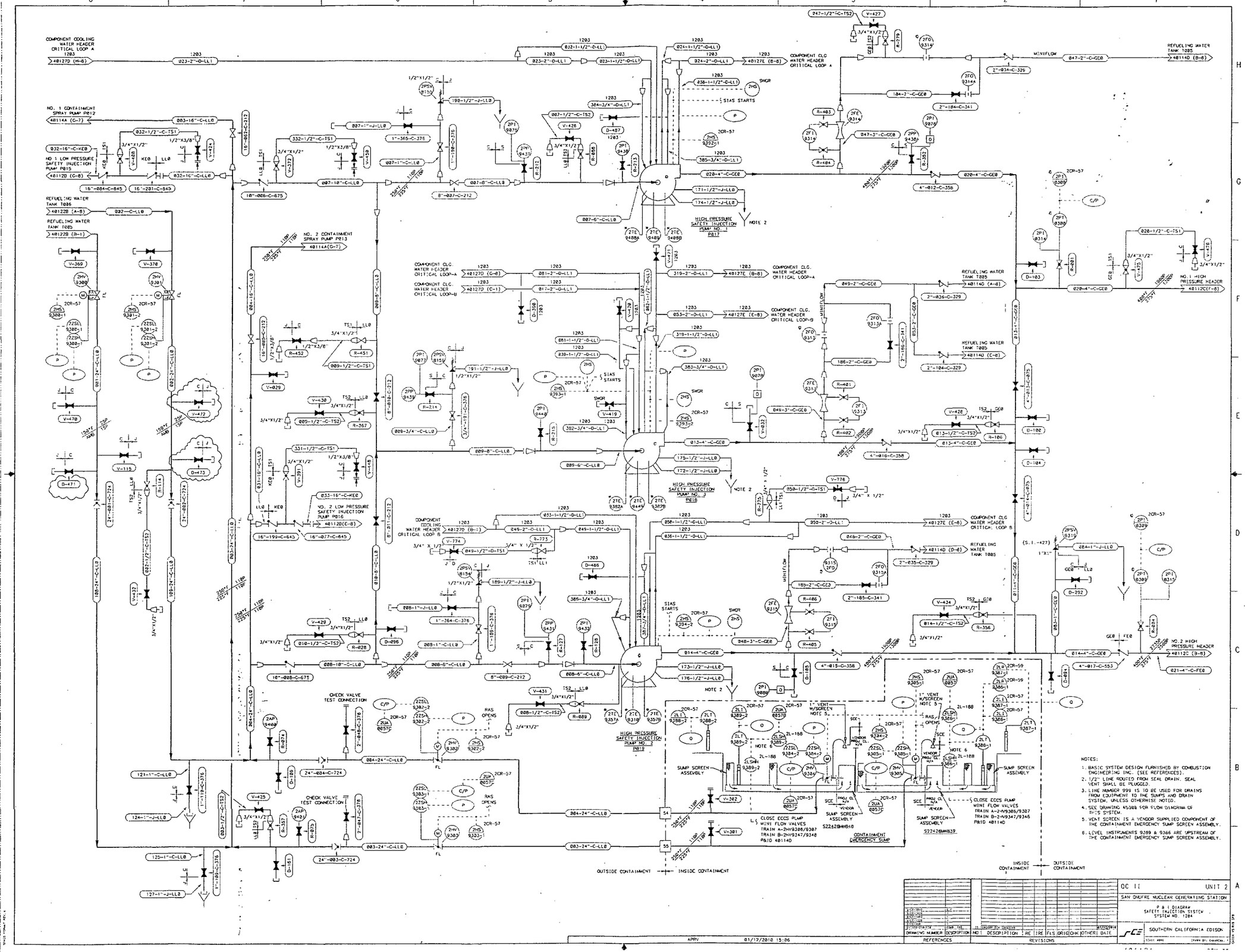

Allowable Through-Wall Flaws in ECCS Schedule 10s Piping at SONGS Units 2 and 3

AES-C-7384-2, Rev 0
Project: AES-10027384-2Q
Made by: RCC 5/14/10
Checked by: CQL 5/14/10

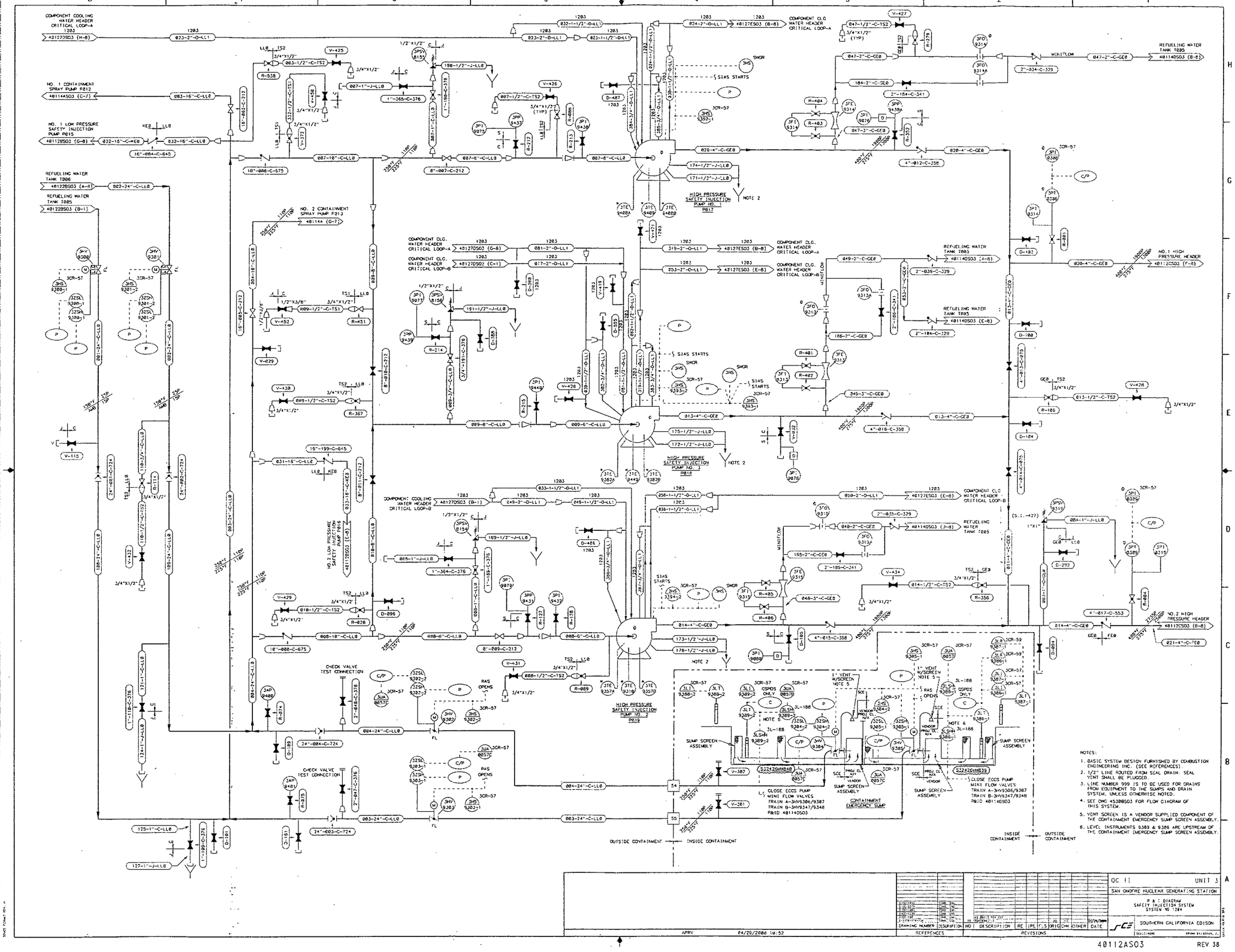

Allowable Through-Wall Flaws in ECCS Schedule 10s Piping at SONGS Units 2 and 3

AES-C-7384-2, Rev 0
Project: AES-10027384-2Q
Made by: RCC 5/14/10
Checked by: CQL 5/14/10

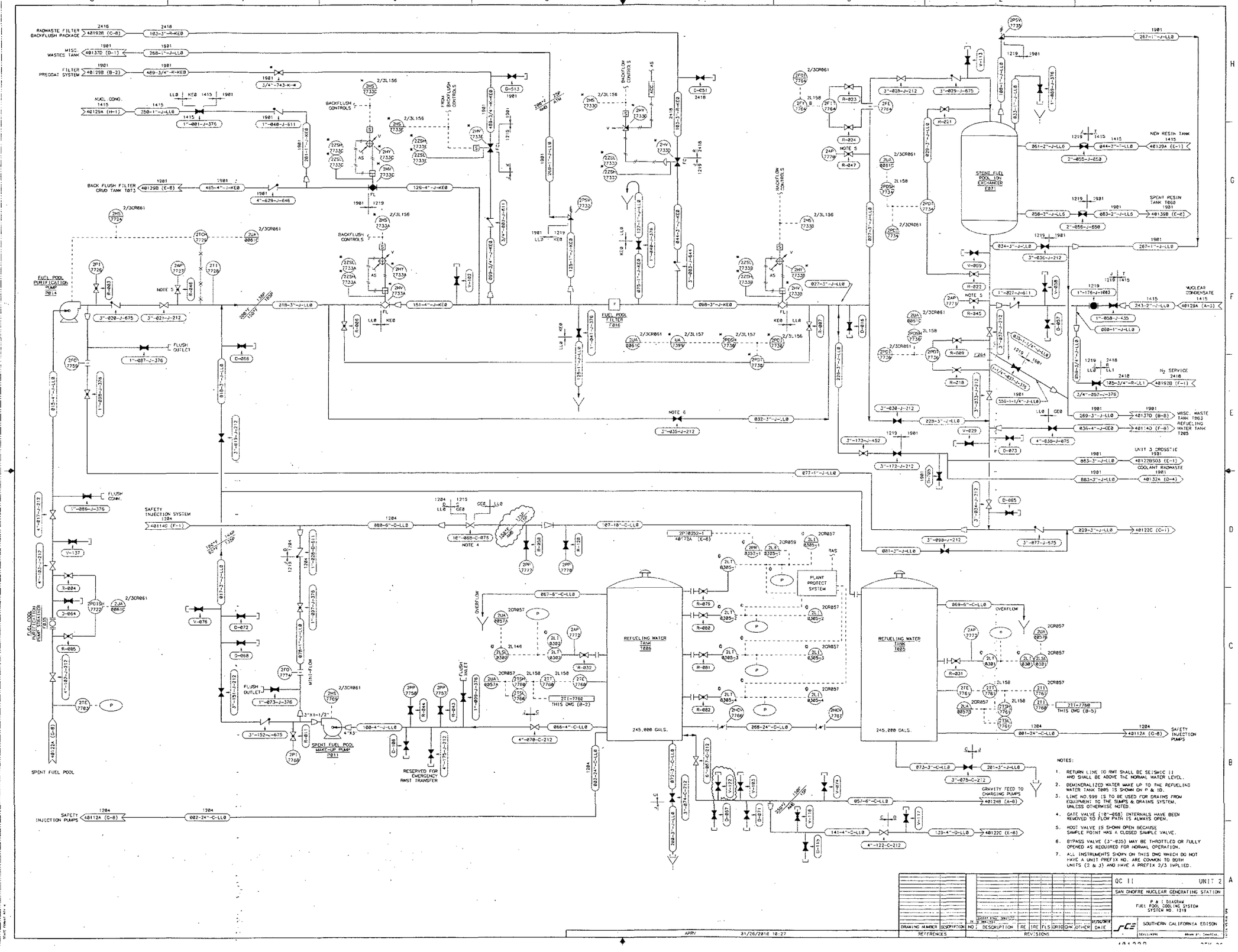

Allowable Through-Wall Flaws in ECCS Schedule 10s Piping at SONGS Units 2 and 3

AES-C-7384-2, Rev 0
Project: AES-10027384-2Q
Made by: RCC 5/14/10
Checked by: CQL 5/14/10

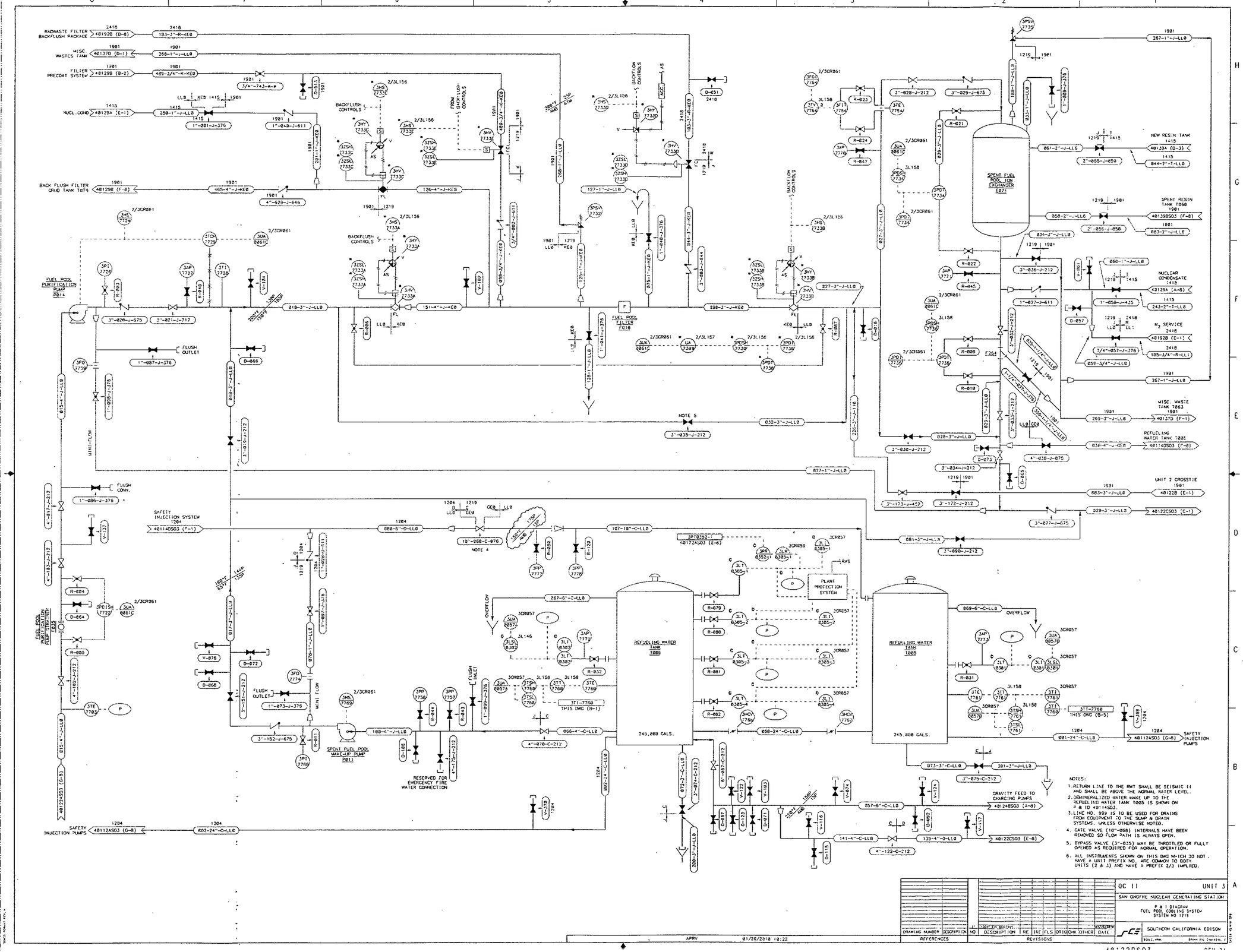

Allowable Through-Wall Flaws in ECCS Schedule 10s Piping at SONGS Units 2 and 3

AES-C-7384-2, Rev 0
Project: AES-10027384-2Q
Made by: RCC 5/14/10
Checked by: CQL 5/14/10

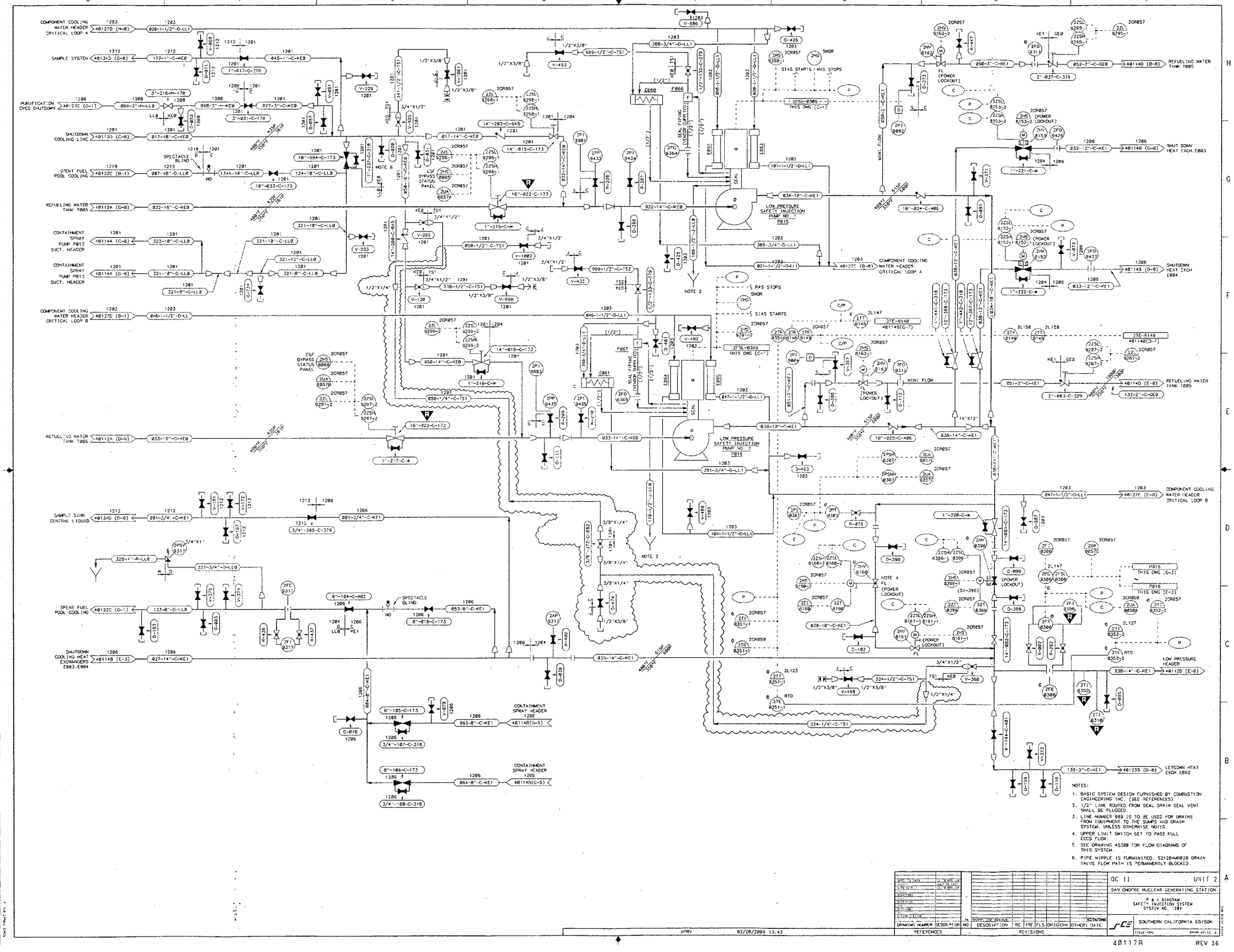

Allowable Through-Wall Flaws in ECCS Schedule 10s Piping at SONGS Units 2 and 3

AES-C-7384-2, Rev 0
Project: AES-10027384-2Q
Made by: RCC 5/14/10
Checked by: CQL 5/14/10

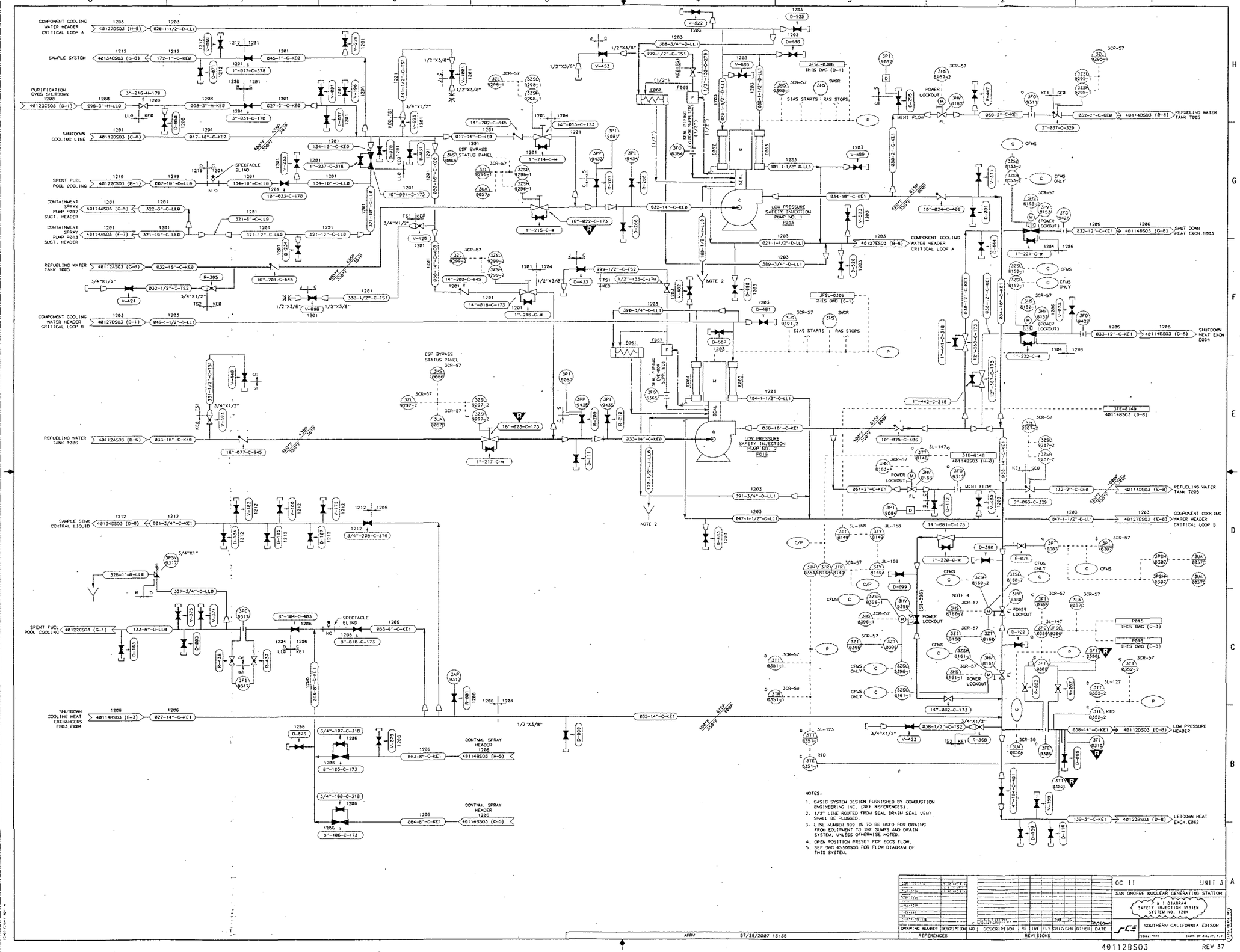

Allowable Through-Wall Flaws in ECCS Schedule 10s Piping at SONGS Units 2 and 3

AES-C-7384-2, Rev 0
Project: AES-10027384-2Q
Made by: RCC 5/14/10
Checked by: CQL 5/14/10

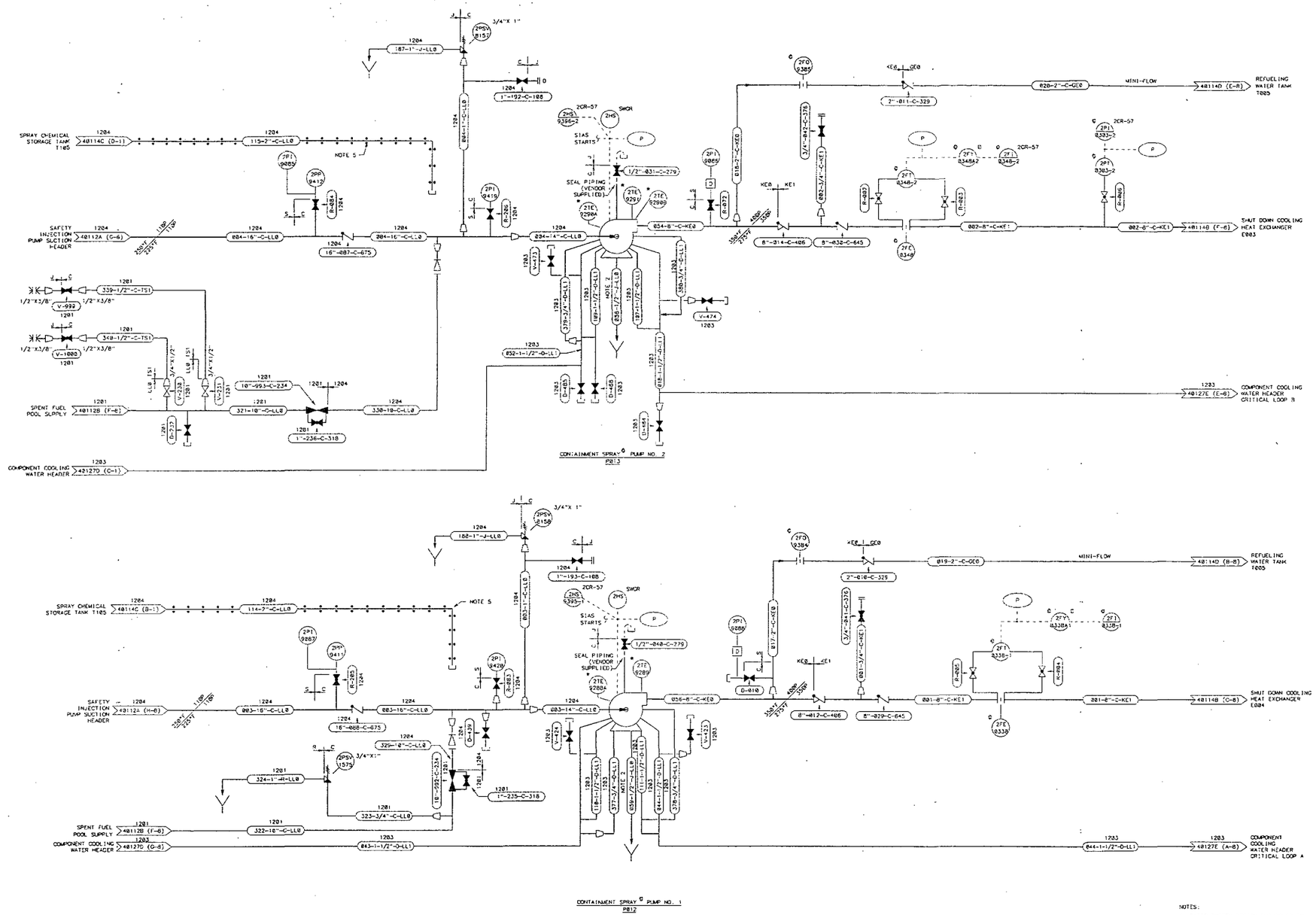

NOTES:

1. BASIC SYSTEM DESIGN FURNISHED BY COMBUSTION ENGINEER INC. (SEE REFERENCES).
2. CONTAINMENT SPRAY PUMPS 1 & 2, 1/2" LINE ROUTED FROM SEAL DRAIN. VENT TO BE PLUGGED.
3. LINE NO. 999 IS TO BE USED FOR DRAINS FROM EQUIPMENT TO SUMP AND DRAIN SYSTEMS. UNLESS OTHERWISE NOTED.
4. SEE DWG 45303 FOR FLOW DIAGRAM OF THIS SYSTEM.
5. HEAT TRACING ON S2-1204-HL-114 & 115 HAS BEEN ELECTRICALLY DISCONNECTED AND ABANDONED IN-PLACE.

OC 1 UNIT 2

SAN ONOFRE NUCLEAR GENERATING STATION

P & I DIAGRAM CONTAINMENT SPRAY SYSTEM SYSTEM NO. 1204

SOUTHERN CALIFORNIA EDISON

REFERENCES | REVISIONS

APRV 12/19/2007 07:48

40114A REV 15

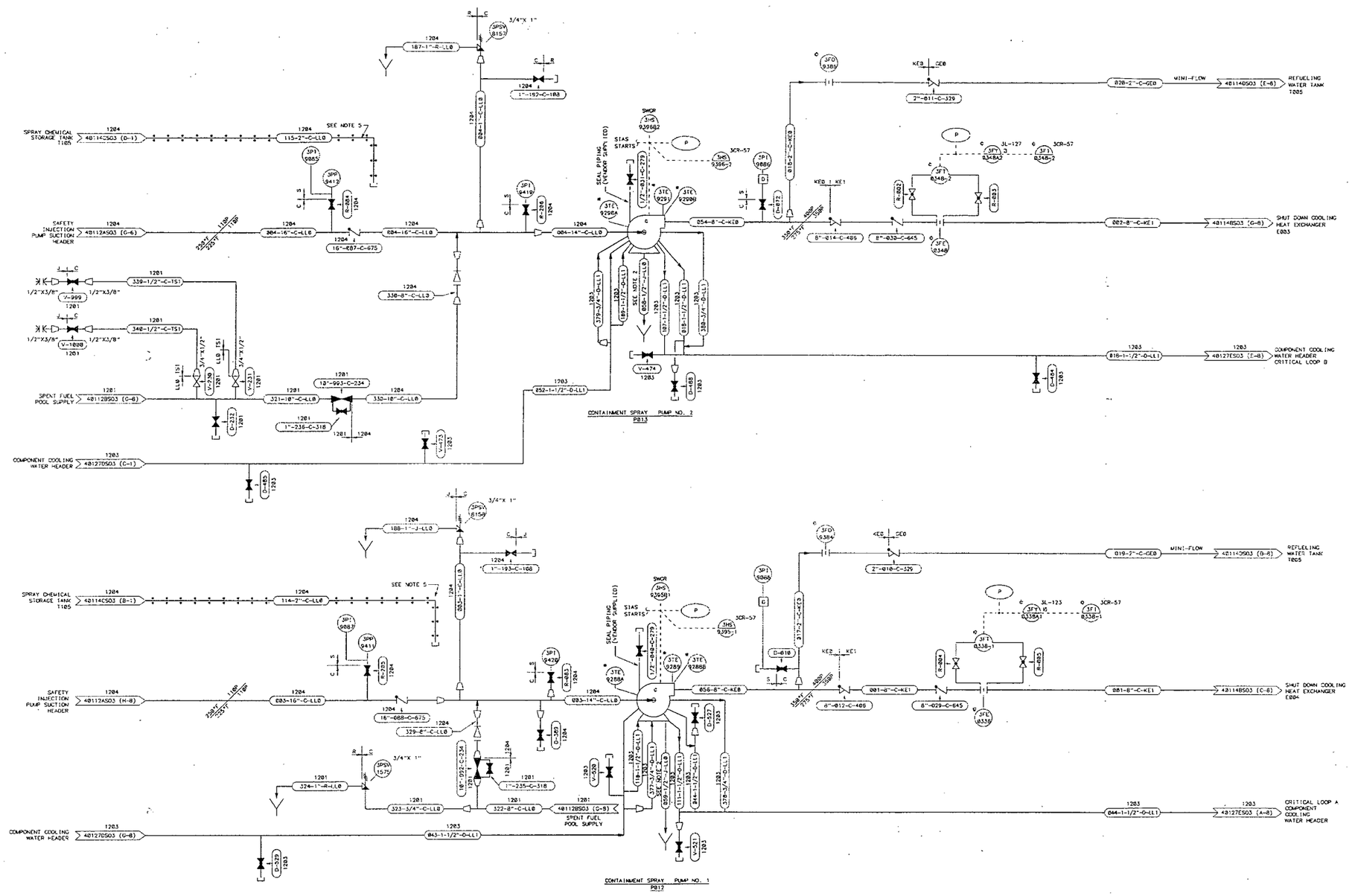

Allowable Through-Wall Flaws in ECCS Schedule 10s Piping at SONGS Units 2 and 3

AES-C-7384-2, Rev 0
Project: AES-10027384-2Q
Made by: RCC 5/14/10
Checked by: CQL 5/14/10

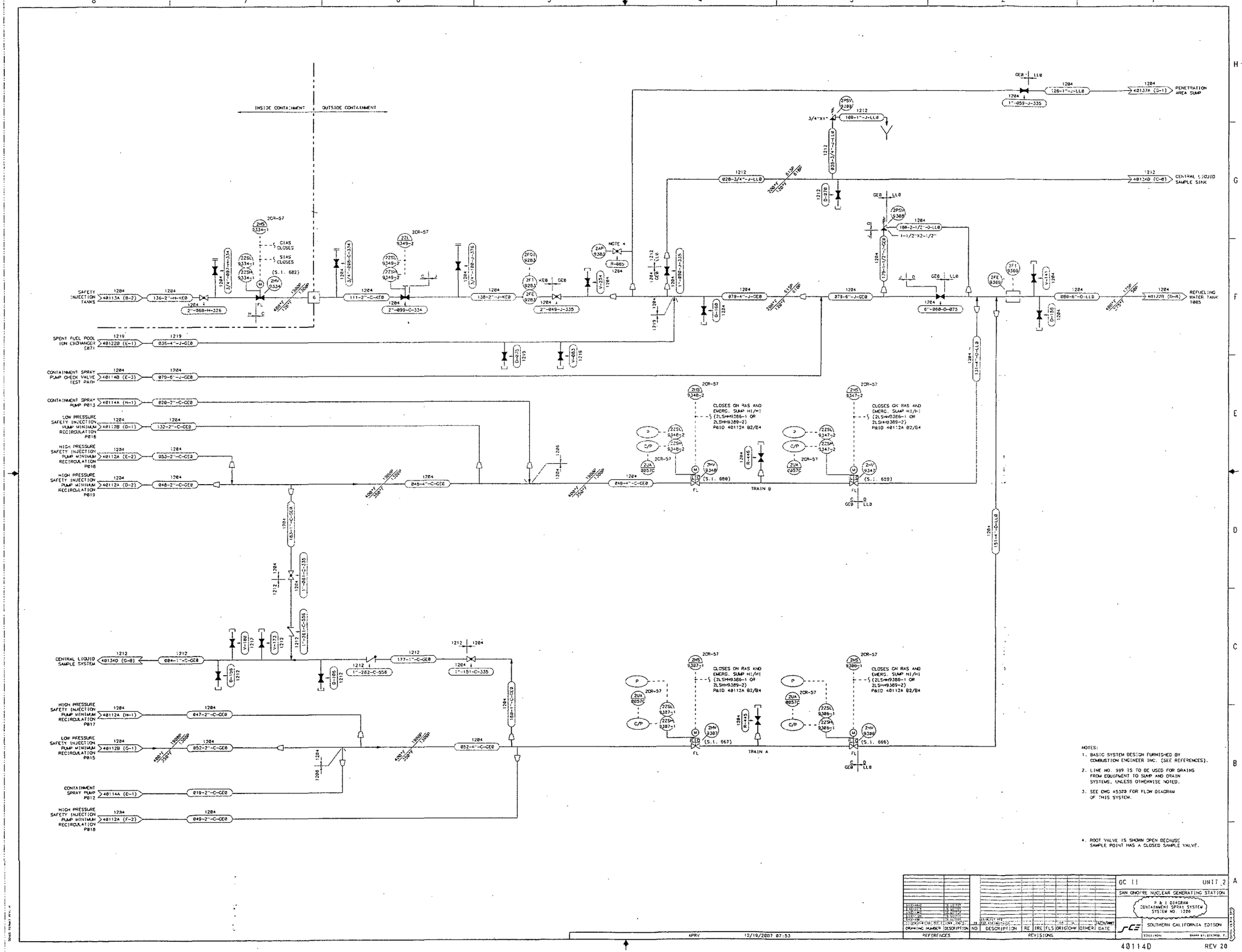

Allowable Through-Wall Flaws in ECCS Schedule 10s Piping at SONGS Units 2 and 3

AES-C-7384-2, Rev 0
Project: AES-10027384-2Q
Made by: RCC 5/14/10
Checked by: CQL 5/14/10

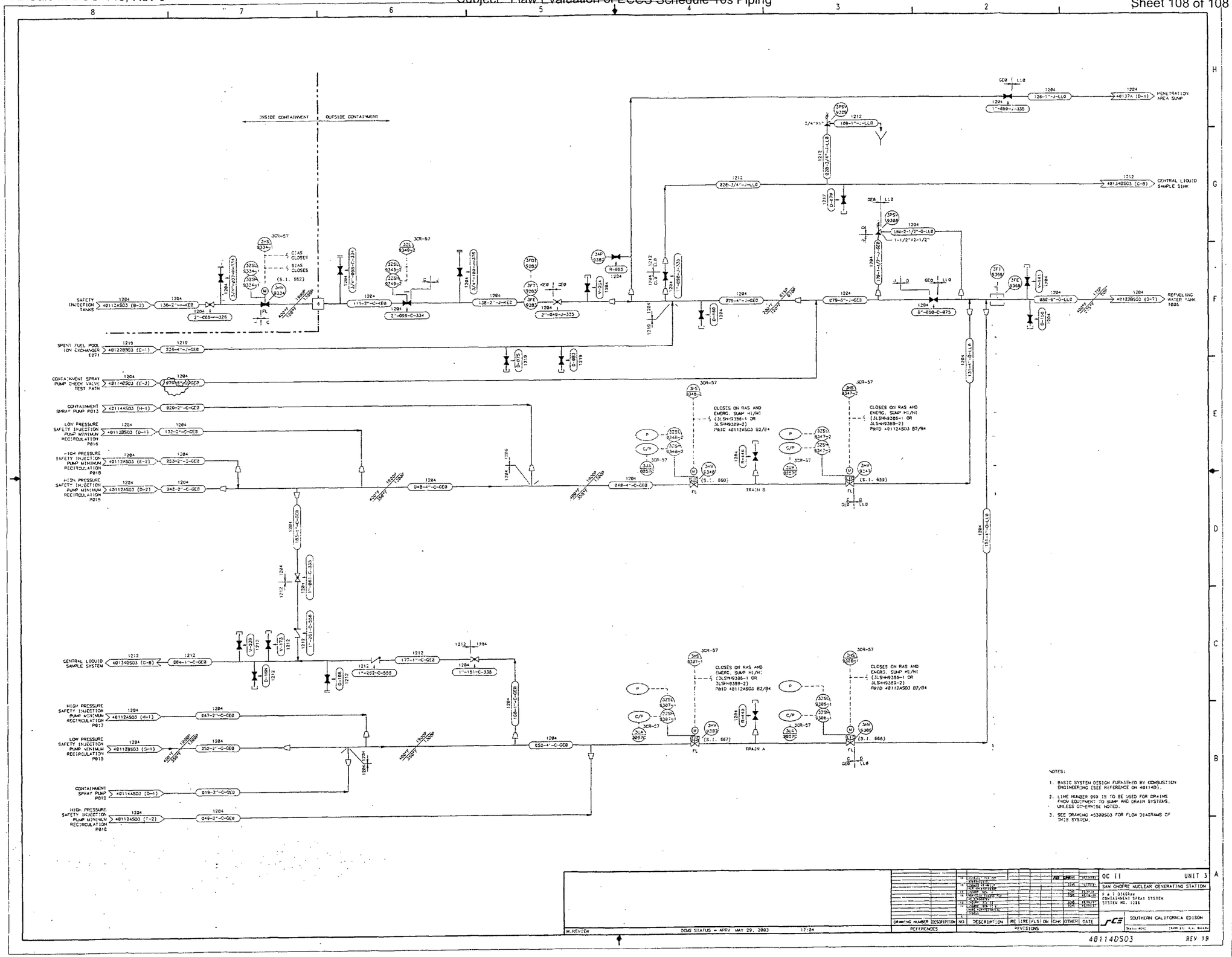

Allowable Through-Wall Flaws in ECCS Schedule 10s Piping at SONGS Units 2 and 3

AES-C-7384-2, Rev 0
Project: AES-10027384-2Q
Made by: RCC 5/14/10
Checked by: CQL 5/14/10