Research Report
LTKK / Nuclear Safety Research Unit

CONDENSATION POOL EXPERIMENTS WITH NON-CONDENSABLE GAS

TOKE-2/2002

Jani Laine

Lappeenranta University of Technology
Department of Energy and Environmental Technology
Nuclear Safety Research Unit
P.O. Box 20, FIN-53851 LAPPEENRANTA, FINLAND
Phone +358 5 621 11, Telefax +358 5 621 2379

Lappeenranta, 4.12.2002

LTKK

Research organisation and address	Customer
Lappeenranta University of Technology Nuclear Safety Research Unit P.O. Box 20 FIN-53851 LAPPEENRANTA, FINLAND	VTT Processes P.O. Box 1604 FIN-02044 VTT
Project manager Markku Puustinen, LTKK	**Contact person** Heikki Sjövall, TVO
Diary code ENE4-59T-2001	**Order reference**

Project title and reference code	Report identification & Pages	Date
FINNUS/TOKE/CONDENSATION POOL	TOKE-2/2002 46 p. + app. 14 p.	4.12.2002

Report title and author(s)

CONDENSATION POOL EXPERIMENTS WITH NON-CONDENSABLE GAS

Jani Laine

Abstract

The formation, size and distribution of the non-condensable gas bubbles in the condensation pools of the Olkiluoto 1 and 2 nuclear power plants (NPPs) in a possible loss-of-coolant accident (LOCA) was studied experimentally with a condensation pool test facility. Also the effect of the non-condensable gas on the performance of an emergency core cooling system (ECCS) pump was examined. Compressed air was blown to the test pool through blowdown pipes or alternatively air was injected directly into the intake pipe of the ECCS pump.

The tests were performed because in a possible LOCA situation there might be a risk that the gas discharging to the condensation pool could push to the ECC systems and undermine their performance.

When the blowdown pipes were initially full of water the first airflow hit to the bottom of the pool and had a contact with the ECCS strainer. As a result of the hit a lot of small air bubbles started to rise from the bottom of the pool. The next couple of large air bubbles forming at the pipe outlet touched the ECCS strainer, too. A lot of air bubbles was on the level of the strainer during the first 30 s because water backflow close to the wall of the pool carried a lot of small air bubbles from the upper part of the pool to the lower part.

In the integral tests, the pump was sucking water through the strainer with a constant flow rate when air was blown to the pool. With volumetric flow rate of 5.5 l/s air bubbles weren't detected inside the transparent intake pipe. With volumetric flow rate of 11 l/s (scaled to the Olkiluoto plant conditions) air bubbles were visible during the first 20 s when air was blown to the pool through two blowdown pipes. During the blows the pump head and water flow didn't decline.

In the pump tests, the pump was working at the nominal speed of 2970 rpm with four different volumetric flow rates when pressurized air was injected directly into the pump intake pipe. With volume flow rates 57 and 75 l/s a 3-4% fraction of air was needed before the head and flow declined considerably. With smaller flows 12.5 and 25 l/s the head and flow started to decline after injection was initiated and they collapsed totally when there was more than 7% air in the intake pipe.

Distribution

Heikki Sjövall, Paulus Smeekes (TVO), Juhani Hyvärinen, Timo Okkonen (STUK), Harri Tuomisto (Fortum NS), Riitta Kyrki-Rajamäki, Eija-Karita Puska, Timo Pättikangas, Ilona Lindholm, Risto Sairanen, Minna Tuomainen (VTT PRO), Arja Saarenheimo, Kim Calonius (VTT TUO), Heikki Purhonen, Markku Puustinen, Juhani Vihavainen, Jani Laine (LTKK), Heikki Kalli

Principal author or Project manager	Reviewed by
Jani Laine, Research Scientist	Markku Puustinen, Senior Research Scientist
Approved by	**Availability statement**
Heikki Purhonen, Senior Research Scientist	As specified in the distribution

LTKK

CONTENTS

1 Introduction ... 3
2 Condensation pool test facility ... 3
2.1 Pool ... 4
2.2 Pressure tanks ... 5
2.3 Blowdown pipes ... 5
2.4 Strainer ... 5
2.5 Pump and piping ... 7
2.6 Pressurized air injection system ... 7
2.7 Instrumentation ... 7
2.8 Visual observation system ... 7
2.9 Test facility vs. Olkiluoto condensation pool ... 8
3 Experiments ... 9
3.1 Experiments with blowdown pipes only ... 9
3.1.1 Tests 1.01-1.08 ... 10
3.1.2 Tests 3.01-3.09 ... 16
3.1.3 Summary of the experiments with blowdown pipes only ... 20
3.2 Experiments with blowdown pipes and an ECCS strainer ... 22
3.2.1 Tests 5.01-5.09 ... 23
3.2.2 Summary of the experiments with blowdown pipes and an ECCS strainer ... 26
3.3 Experiments with blowdown pipes, an ECCS strainer and a pump ... 29
3.3.1 Tests 8.01-8.04 ... 29
3.3.2 Tests 13.01-13.04 ... 32
3.3.3 Summary of the experiments with blowdown pipes, an ECCS strainer and a pump ... 32
3.4 Experiments with a pump and non-condensable gas ... 33
3.4.1 Tests 12.01-12.03 ... 34
3.4.2 Tests 10.03 & 11.01 ... 39
3.4.3 Tests 16.01-16.02 ... 42
3.4.4 Summary of the experiments with a pump and non-condensable gas ... 45
4 Summary ... 45
5 References ... 46
Appendixes:
Appendix 1. Design drawings of the condensation pool test facility
Appendix 2. Performance curves for pump model CPK 100-315
Appendix 3. Water volumetric flow rate and pressure difference over the pump as a function of volume fraction

LTKK

NOMENCLATURE

g	gravitational constant	9.81 m/s^2
H	delivery head lift	m
M	molecular weight	g/mol
m	mass	kg
$\dot{m}$	mass flow rate	kg/s
p	pressure	Pa
q_v	volume flow rate	l/s
R	universal gas constant	8314 J/kmolK
T	temperature	°C
t	time	s
V	volume	m^3
v	velocity	m/s
Δ	difference	-
ε	volume void fraction	-
ρ	density	kg/m^3

Subscripts

G	gas
i	intake pipe
L	liquid
p	pressure pipe

1 INTRODUCTION

In the studies reported here, the effect of non-condensable gas bubbles on performance of core spray system 323 and containment spray system 322 in the containments of Olkiluoto 1 and 2 nuclear power plants (NPPs) have been investigated.

In a possible loss-of-coolant accident (LOCA), steam and nitrogen gas will be discharged from upper drywell to the condensation pool through blowdown pipes. Bubbles of steam and nitrogen will form at the pipe outlets. There may be a risk that the bubbles will surround to some extent the emergency core cooling system (ECCS) strainers in the condensation pool or there will exist a region around the strainers with high void fraction. This could undermine the performance of 322 and 323 systems. There might also be a possibility that cavitation effect could damage the ECCS pumps. The nitrogen gas would flow to wetwell during the first 100 seconds, if large steam line LOCA occurs.

The systems 323 and 322 suck water from the condensation pool through the four 323 strainers. The sides of the strainers are made of screen plate; diameters of holes are 4 mm. The panel area per strainer is 32 m^2 and the total hole area is 8.4 m^2 per strainer. The upper edges of the strainers are on the level +7.1 m and the lower edges on the level +4.1 m. The outlets of the blowdown pipes are on the level +5.5 m. The horizontal distance of the nearest pipe from the strainer is about 1.5 m. The containment spray system 322 (mass flow rate 75 kg/s per one strainer) and the core spray system 323 (mass flow rate 25 kg/s per one strainer) will start at about 20 seconds into the accident. The total mass flow rate per one strainer is therefore 100 kg/s.

In Olkiluoto 1 and 2, the four blowdown pipes, which are located closest to the 323 strainers in the condensation pool, were plugged during refueling outages in 2001 to prevent possible failures of the systems 322 and 323 in LOCA situation.

This gas bubble problem has been analyzed in VTT Energy (nowadays VTT Processes) both with hand calculations and numerically with Fluent CFD-code /1/. In these analyses, no harmful amount of non-condensable gas was detected inside the 323 strainers. There were no problems with pumps, either. The reliability of these analyses has to be verified by experiments. For this reason, the Nuclear Safety Research Unit at Lappeenranta University of Technology constructed a test facility, which simulates blowdown pipes, a condensation pool, an ECCS strainer and an ECCS pump of the Olkiluoto plant.

2 CONDENSATION POOL TEST FACILITY

The condensation pool test facility consists of the following main parts: a condensation pool, two pressure tanks, two blowdown pipes, an ECCS strainer, a pump with piping and a pressurized air injection system. A 3D-figure of the test facility is shown in Figure 1 and all the relevent design drawings in Appendix 1.

Pressurized airflow from the pressure tanks to the condensation pool through the blowdown pipes will simulate non-condensable gas flow in a possible LOCA situation in the containments of Olkiluoto 1 and 2 nuclear power plants.

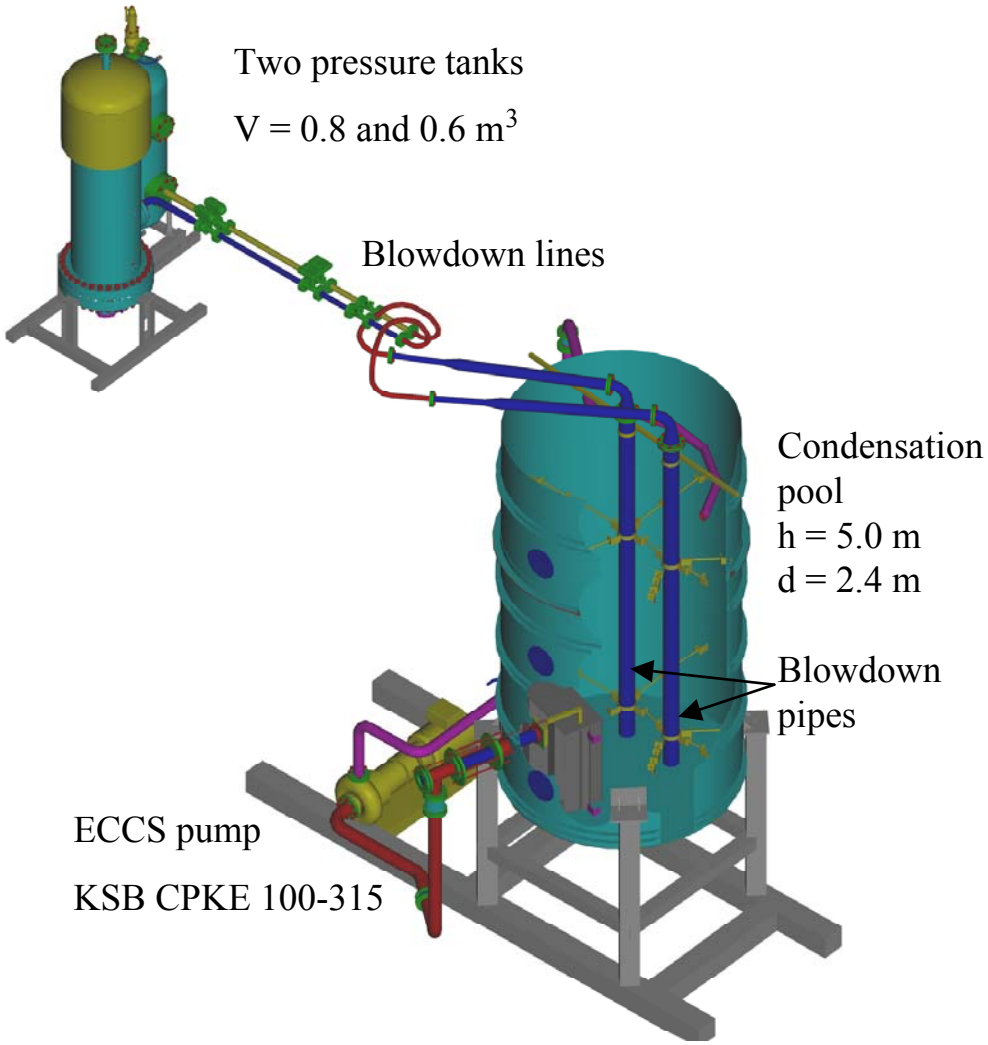

Figure 1. Condensation pool test facility.

2.1 POOL

Test condensation pool is a cylinder shaped pool with open top. The pool has been made of stainless steel. There are five circular windows in the pool wall for visual observation of the interior. The inner diameter of the pool is 2.4 m, the cross-sectional area 4.5 m^2 and the height 5.0 m. The pool has been installed on the base made of steel bars. Disc springs have been installed under the four stands. In addition, the pool has been connected to the walls of the laboratory in two different directions by using five steel bars (not shown in Figure 1).

In Olkiluoto 1 and 2 units, condensation pool is an annular space with the inner diameter 10.86 m and the outer diameter 22.02 m. The cross-sectional area is 287.5 m^2 and the effective cross-sectional area is 279 m^2. The bottom of the pool is on the level +2.5 m and the normal water level is +12 m. Water volume is approx. 2700 m^3. In normal plant conditions water temperature is kept under 20°C. In a possible LOCA situation, the temperature may rise up to 84°C.

2.2 PRESSURE TANKS

Pressure tanks (volumes 0.8 m^3 and 0.6 m^3) are connected to each other with piping to equalize the pressure inside the tanks in every situation. The pressure tanks can be pressurized to an absolute pressure of 7.5 bar with the help of the pneumatic system.

2.3 BLOWDOWN PIPES

From each of the pressure tanks goes a blowdown line (inner diameter 55 mm) towards the condensation pool. The blowdown lines are connected to the upper ends of the vertical blowdown pipes above the pool. The blowdown pipes are made of stainless steel and placed inside the pool in a non-axisymmetric location. Two different diameter blowdown pipes can be used, either DN150 or DN200. The inner diameters are 162.3 mm and 213.1 mm, respectively. The length of both pipes is about 4.0 m. The lower ends of the blowdown pipes are 1.0 m above the bottom of the tank. During the tests the water level inside the pool is approx. 3.2 m. This means that the pipe outlets are submerged approx. 2.2 m and the pressure at the level of the pipe outlets is 122 kPa (air pressure + hydrostatic pressure). The horizontal location of the blowdown pipes depends on the experiments in question. The location of the pipes in horizontal direction during the first stage experiments is shown in Figure 2 and during the second and third stage experiments in Figure 3.

In Olkiluoto 1 and 2, there are 16 blowdown pipes each having an inner diameter of 600 mm. The pipes are submerged 6.5 m below the condensation pool water level. In Olkiluoto, the condensation pool area per strainer is 17.97 m^2. The test pool area (4.5 m^2) is then 25% of the corresponding Olkiluoto condensation pool.

2.4 STRAINER

Inside the pool is the ECCS strainer. The strainer is made of stainless steel. The sides of the strainer are made of similar screen plate (holes 4 mm) as used in 323 strainers in Olkiluoto. The horizontal cross-sectional profiles of the sides are also the same in both cases. The width of the test strainer is 1033 mm (in Olkiluoto 2960 mm) and the height 1000 mm (in Olkiluoto 3005 mm). So the vertical cross-section area of the test strainer is about nine times smaller than in plant conditions. The top of the test strainer is 495 mm above the blowdown pipe outlet and the bottom 505 mm below the pipe outlet. Appendix 1 shows the structure of the strainer.

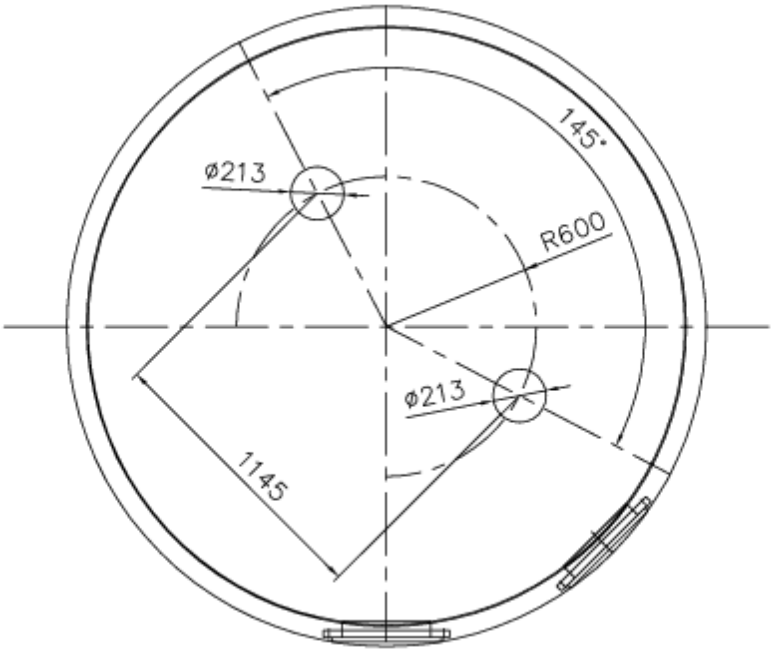

Figure 2. The horizontal location of the blowdown pipes during the experiments in stage 1.

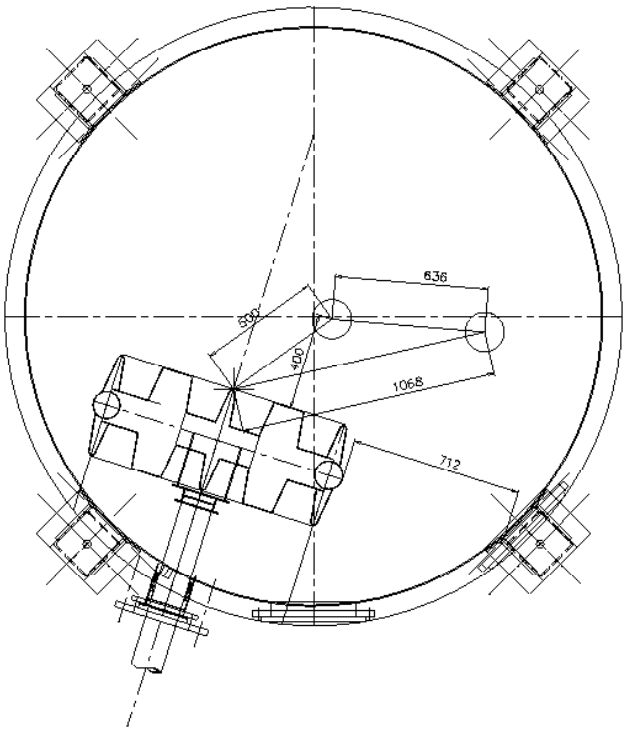

Figure 3. The location of the ECCS strainer and the blowdown pipes in horizontal direction.

The distances between the blowdown pipes and the strainer in horizontal direction were scaled with the ratio of the inner diameters of the test facility and Olkiluoto blowdown pipes. E.g. the distance of the nearest pipe from the strainer is obtained as follows: (162.3 mm / 600 mm) x 1480 mm = 400 mm. Horizontal distances are shown in Figure 3.

2.5 PUMP AND PIPING

The pump is placed outside the pool so that the axis of the impeller is 2.1 m below the suction point. The intake pipe is connected to the ECCS strainer. The pump is a single-stage impeller pump (type KSB CPKE 100-315) in horizontal position equipped with a 264 mm diameter impeller. The maximum delivery head lift is 105 m when volume flow rate is 0 l/s. In the rated operating point the head is 85 m and volume flow rate 60 l/s. During the tests the pump simulated ECCS pumps in plant conditions in two different ways. In the third stage experiments, the pump simulated the combined flow rate of a containment spray system 322 and a core spray system 323 pump. In the fourth stage experiments, the pump simulated only the 322 pump in plant conditions. During the tests the pump sucked water through the strainer and pumped it back to the pool above the pool level. The piping is made of standard stainless steel pipes. The size of the intake and pressure pipe is 139.7x2.0 and 114.3x2.0, respectively. The length of the intake pipe is 5.7 m and of the pressure pipe 11.1 m. The head from the axis of the impeller back to the pool is 5.3 m. Appendix 1 shows the placing of the piping and the pump.

2.6 PRESSURIZED AIR INJECTION SYSTEM

Pressurized air can be blown from the pneumatic system directly to the pump's intake pipe when the pump is sucking water through the strainer. Air is blown through a pressure reduction valve for a better control of volume flow rate. It is possible to inject air approx. 11 l/s in NTP conditions. The injection point is in the intake pipe approx. 0.6 m before the pump.

2.7 INSTRUMENTATION

The test facility has been equipped with several temperature, pressure and volumetric flow measurements. Table 1 lists them all.

2.8 VISUAL OBSERVATION SYSTEM

The visual observation system of the test facility consists of PAL standard devices: five video cameras, VHS videocassette recorder, two digital videocassette recorders, a quad processor and a color TV.

The location and the number (four or five) of installed video cameras depend on the stage of experiments. Four of the cameras are Sony Digital Color Video Cameras (model SSC-DC318P) at 25 fps (frames per second). Three of Sony cameras are equipped with normal-angle Canon lenses (model TV3310D) and one of them with a Computar wide-angle lens (model TG2616FCS-3). The fifth camera is a Color Submergible Camera (model RG-58U) with an integrated lens. The camera views are displayed on Sanyo 28" color TV (model CE28DN5-C). By using Digital Color Quad Processor (model CQ-141P) it is possible to divide the TV screen to four equal size parts and look at the view of four cameras on the same screen. Camera views can be recorded either in DV-format (Sony Digital Videocassette Recorder, models DSR-11 and GV-D1000E) or in VHS-format (JVC HR-J870EU). Both DV-recorders can use mini DV-tapes and GV-D1000E is also equipped with built-in 4" LCD monitor. Afterwards, the experiments can be replayed at normal speed, in slow motion (1/3- or 1/10-speed) or only one frame at a time.

Table 1. Instrumentation of the condesation pool test facility.

Measurement	Location
T1	blowdown line 1 temperature
T2	blowdown line 2 temperature
T3	pressure tank 1 temperature
T4	pressure tank 2 temperature
T10	pool water temperature
T11	water temperature in the pump line before the pump
T12	water temperature in the pump line after the pump
T100	pressurized air injection line temperature
P1	blowdown line 1 pressure
P2	blowdown line 2 pressure
P3	pressure tank 1 pressure
P4	pressure tank 2 pressure
P100	pressurized air injection line pressure
F1	blowdown line 1 volumetric flow rate
F2	blowdown line 2 volumetric flow rate
F4	volumetric flow rate after the pump
F5	volumetric flow rate before the pump
F100	pressurized air injection line volumetric flow rate
DP1	pressure difference over the ECCS strainer
DP2	pressure difference over the intake pipe
DP3	pressure difference over the pump
DP4	pressure difference over the throttle plate
L1	pool water level

2.9 TEST FACILITY VS. OLKILUOTO CONDENSATION POOL

In table 2, comparison of the main design parameters between the test facility and Olkiluoto 1 and 2 units condensation pool is shown. The ratio of the cross-sectional area

of the blowdown pipes and of the pool is given for the test facility and Olkiluoto units on the last row of Table 2.

Table 2. Test facility vs. Olkiluoto condensation pool.

	Test facility	Olkiluoto 1 and 2 units
Number of the blowdown pipes	2	16
Inner diameter of the blowdown pipes	162.3 mm (DN150) 213.1 mm (DN200)	600 mm
Pipes submerged	2.2 m	6.5 m
Pool cross-sectional area	4.5 m^2	287.5 m^2 (effective 279 m^2)
Water level in the pool	3.2 m	9.5 m
Water volume in the pool	17.5 m^3	2700 m^3
A_{pipes}/A_{pool} x 100%	0.9% (DN150) 1.6% (DN200)	1.6%

3 EXPERIMENTS

Experiments were carried out in four different stages:

1. Experiments with blowdown pipes only
2. Experiments with blowdown pipes and an ECCS strainer
3. Experiments with blowdown pipes, an ECCS strainer and a pump (integral tests)
4. Experiments with an ECCS pump and non-condensable gas

3.1 EXPERIMENTS WITH BLOWDOWN PIPES ONLY

In the first stage, experiments were made with pipes only. Two different blowdown pipe diameters were used, DN150 and DN200. About half of the tests were made with one pipe and the rest of the tests with two parallel pipes. There was no ECCS strainer inside the pool.

The idea of the experiments was to find out the size and the shape of the forming air bubbles in relation to the diameters of the blowdown pipes. The velocity of rising bubbles was also a subject of interest.

At first, the condensation test pool was filled with water and the pressure tanks were pressurized to the pressure of the pneumatic system (about 7.5 bar). Then pressurized air was blown down into the condensation pool through the blowdown pipes. The pipes were initially full of air or alternatively filled with water to the pool level. Air was either refilled or not from the pneumatic system to the pressure tanks during the experiments. With air refill even a 50 s blow through one DN150 pipe was possible.

Four video cameras were directed at the pool in the first stage. The first two focused on the blowdown pipe outlets through the poolside windows. The third camera (Color

Submergible Camera) was installed inside the pool below the pool level and the fourth one above the pool.

3.1.1 Tests 1.01-1.08

In the first series of experiments, eight separate tests were made using blowdown pipe size DN200 (Ø219.1x3.0). Tests 1.01-1.04 were made with only pipe 2 and tests 1.05-1.08 in parallel with pipes 1 and 2. The pool level during the tests was 3.2 m and the water temperature 15°C. Test matrix for experiments in series 1 is shown in Table 3.

Table 3. Test matrix for experiments in series 1.

Test	Pressure in tanks (bar)	Air refill during test (Y/N)	Pipe (1/ 2/ 1&2)	Initial water level in pipes (full/empty)
1.01	7.4	N	2	full
1.02	7.8	Y	2	full
1.03	7.4	N	2	empty
1.04	8.0	Y	2	empty
1.05	7.3	N	1&2	full
1.06	8.0	Y	1&2	full
1.07	7.6	N	1&2	empty
1.08	7.9	Y	1&2	empty

The measuring range of the vortex volume flow meters that were installed to the blowdown lines was 0...500 m^3/h. The maximum value was exceeded in every single test. For this reason, the velocity of air inside the pipes was calculated. Since no air refill to the pressure tanks was performed in tests 1.01 and 1.03, the mass of air inside the pressure tanks can be calculated after every measurement time step (0.1 s) with the help of the pressure and temperature measurements in the tanks. Assuming air behaves as an ideal gas and ignoring heat transfer between the tanks and the environment the mass of air inside the tanks can be calculated with the ideal gas equation:

$$m = \frac{pVM}{RT}, \qquad (1)$$

where p is absolute pressure inside the tank,
V is volume of the tank,
M is molecular weight of air (28.97 kg/kmol),
R is universal gas constant (8314 J/kmolK),
T is temperature inside the pressure tank.

Then, the mass flow rate of air in every single measurement time step can be calculated by using the next formula:

$$\dot{m} = \frac{m_{n-3} - m_{n+3}}{t_{n+3} - t_{n-3}}, \qquad (2)$$

where m_{n-3} is mass of air inside the tanks at measuring time step n-3
m_{n+3} is mass of air inside the tanks at measuring time step n+3
t_{n+3} is measuring time step n+3
t_{n-3} is measuring time step n-3

Airflow velocity inside the blowdown pipe is then calculated by using continuity equation. Velocity is normalized to 1 bar pressure:

$$v = \frac{4\dot{m}}{\pi d_s^2 \rho}, \qquad (3)$$

where ρ is density of air (1.2 kg/m^3),
d_s is inner diameter of the blowdown pipe.

Finally, airflow volume flow rate in the pressure of the vortex volume flow meters is calculated to double-check the calculation:

$$q_{v,VORTEX} = \frac{v}{p_{VORTEX}} \cdot 3600 \cdot \frac{\pi}{4} \cdot d_s^2 . \qquad (4)$$

The right hand sides of the measured and calculated volume flow rate curves below the upper limit of the measuring range are quite well equivalent. This can be seen from Figure 4, where measured and calculated airflow volume flow rates during test 1.01 have been plotted to the same figure. Note that the integration time for the vortex flowmeters is 1 second. This can be seen as a slight timing difference between the curves.

TableCurve 2D v.5.0-computer program is then used to create a polynomial curve fit equation for the velocity of air as a function of pipeline's pressure. By using this polynomial curve fit equation airflow velocities are adapted to the other experiments of this series.

Test 1.01

The first test was made with blowdown pipe 2 only. Initilly, the pipe was filled with water to the pool level. Pressure tanks were pressurized to about 7.4 bars (abs.) and air was not refilled from the pneumatic system during the test.

After opening the fast-speed control valve, the jet emerged into the pool (t = 0 s). Next the jet hit strongly to the bottom of the condensation pool. Small air bubbles formed a circular pattern to the bottom of the pool. This pattern expanded quickly towards the

poolside. At t = 0.2 s, the airflow had still a contact with the pool bottom and the maximum width of the jet was approx. 0.9 m.

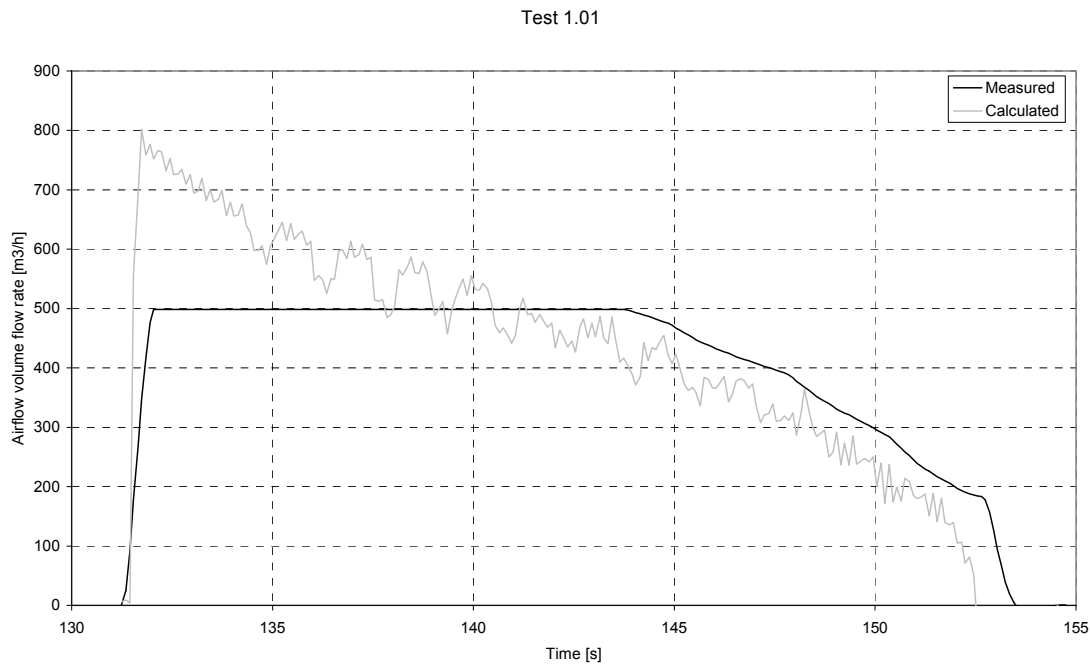

Figure 4. Measured and calculated airflow volume flow rates during test 1.01.

At t = 0.3 s, airflow had no contact with the bottom of the pool anymore. After that, an air bubble started to form at the pipe outlet. This bubble expanded quickly and at t = 0.4 s, its diameter was about 1.2 m. At t = 0.5 s, the diameter was 1.3 m and the bottom of the bubble was on the level of the pipe outlet. The shape of the bubble was quite spherical. The big bubble started to break up forming a cloud of small air bubbles. At t = 0.7 s, the bottom of the cloud had risen to the level of fictional ECCS strainer's top. The diameter of the cloud was then 1.5 m. The difference in altitude between the pipe outlet and the fictional ECCS strainer's top was approx. 0.5 m. The cloud continued to rise towards the pool level and expanded considerably more.

At the moment t = 0.8 s, the first small bubbles that had formed the circular pattern on the pool had risen to the level of the pipe outlet.

The next bubbles, forming at the pipe outlet, were considerably smaller than the first one. Their diameters were 0.45-0.55 m, when their bottoms were on the level of the pipe outlet. When the bottoms of the bubbles passed the level of the pipe outlet they started to break up. On the level of the fictional ECCS strainer's top, the bubbles had expanded to 0.6-0.7 m. These bubbles didn't hit to the bottom of the pool at all. Instead of that they rose immediately towards the pool level.

At a about t = 1.2 s, the first air bubbles reached the water surface, which itself had risen very fast. The rising air entrained a large amount of water that shot up and caused the

surface to splash strongly. Some water even splashed over the poolside although the water level in the pool was 1.8 m below the top of the pool in the beginning of the test.

At t = 1.5 s, small bubbles, which had risen from the bottom of the pool, covered the pipe completely. Some small bubbles also circulated from the upper part to the lower part of the pool. For these two reasons, it was not possible to view airflows from the pool windows for a while.

After t = 15 s, the amount of small bubbles reduced so, that it was possible to observe the airflow again. Now, the diameters of the forming bubbles varied between 0.35-0.55 m. After that moment, all small bubbles had risen from the bottom of the pool above the level of the pipe outlet, but some small bubbles still circulated from the upper part to the lower part of the pool.

In the beginning of the blow, the airflow velocity in the blowdown pipe was about 40 m/s. However, the velocity decreased very fast as the blast continued and was only 20 m/s at t = 3 s. Air was blown to the pool for about 21 s. After that, the pressure inside the tanks was no more than 1.3 bar and the airflow velocity was under 1 m/s. Airflow velocity as a function of time is presented in Figure 5. The time scale in Fig. 5 isn't the same as in this text. The moment t = 0 s in the text corresponds to the moment t = 131.5 s in Fig. 5.

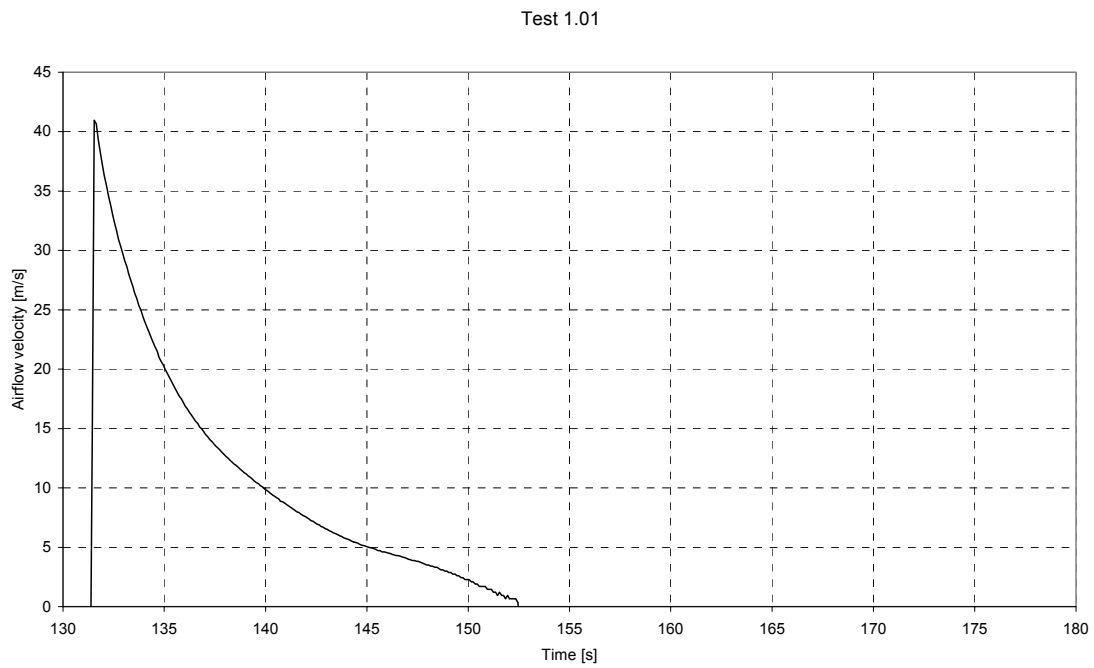

Figure 5. Airflow velocity during test 1.01.

Test 1.02

The second test was also made with pipe 2. The only difference to the previous test was the air refill during the test. Now it took almost 13 s until the velocity of air had decreased to 20 m/s. Air was blown to the pool for almost 40 s. The larger bubbles at the blowdown pipe outlet and the smaller bubbles of the circular pattern on the pool bottom formed the same way as they did in the test 1.01. Now it took approx. 2 s before the pipe was covered with small bubbles. At t = 20 s, the pipe was visible again, but small bubbles still circulated from the upper part of the pool to the lower part and covered the view occasionally. Airflow velocity as a function of time has been plotted in Figure 6. Since, the time scale in Figures 5 and 6 is similar, it is easy to see how the velocity decreased more slowly during the test 1.02 than during the test 1.01.

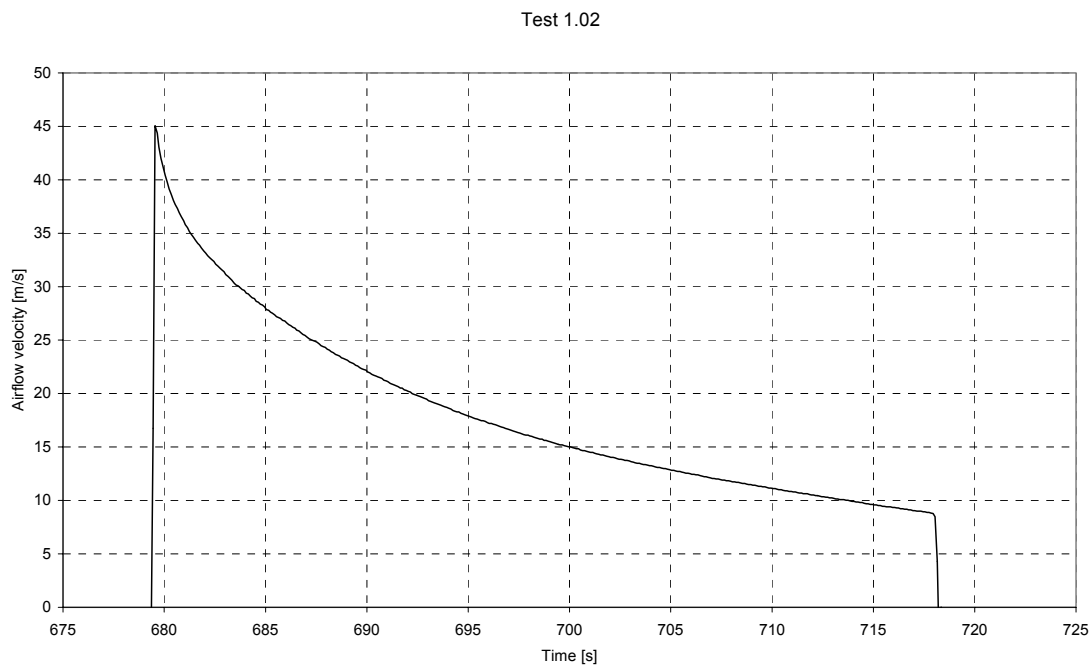

Figure 6. Airflow velocity during test 1.02.

Test 1.03

In the beginning of this test, pipe 2 was full of air to better observe the formation of large bubble. During the test no air refill to the pressure tanks was used. Air was blown to the pool for almost 18 s. During the blast the maximum velocity was 40 m/s.

In this case, the first jet didn't hit to the bottom of the pool. Instead the first bubble formed at the pipe outlet very smoothly. The bubble was rather symmetric in relation to the axis of the pipe during the formation process. At t = 0.2 s airflow had pushed 0.4 m below the level of the pipe outlet and its diameter was 0.9 m. The shape of the bubble wasn't very spherical at any moment.

At t = 0.4 s, the bottom of the bubble was on the level of the pipe outlet. The diameter of the bubble was then 1.1 m. At t = 0.7 s, the diameter was 1.6 m and the bottom of the bubble had risen to the level of the fictional ECCS strainer's top. At t = 1.2 s the first air bubbles reached the water surface.

The diameters of the bubbles forming next at the pipe outlet were about 0.6-0.7 m. These bubbles rose up close to the pipe and the amount of air farther away in the pool was negligible.

Air bubbles coming from the pipe outlet moved water from the lower part of the pool to the upper part. Water circulated back to the lower part close the sides of the pool. This backflow carried a lot of small air bubbles to the lower part of the pool. That's why between t = 4...15 s it was impossible to observe airflows from the pool windows.

Test 1.04

The only difference compared to the previous test was the air refill during this test. The maximum velocity of air was 47 m/s and air was blown to the pool for almost 51 s. The blowdown pipe was not visible from the pool windows between t = 4...20 s s. After 20 s, it was seen from the pool windows how airflows rose upwards close to the pipe.

Test 1.05

The rest of the tests were made with two pipes in parallel. In test 1.05, both pipes were initially filled with water to the pool level. Air wasn't refilled during the test. Air was blown down to the pool for about 14 s and the maximum velocity was 40 m/s. Now it took only 1.6 s until the velocity had decreased to 20 m/s. Airflow emerged from pipe 2 at t = 0 s and from pipe 1 at t = 0.2 s. Both airflows hit to the bottom of the pool.

Bubbles formed the same way as they did in tests 1.01 and 1.02. At t = 0.5 s the bubbles from the two pipes touched each other. At about t = 1.3 s the cloud of bubbles had risen to the pool level. Between 2.5...10 s pipes were not seen from the pool windows. Air was blown to the pool for about 14 s.

Test 1.06

Air was refilled form the pneumatic system during this test. It took 5 s until the velocity had decreased to 20 m/s. Air was blown to the pool for about 36 s. The lower part of the pool was full of small bubbles during the first 20 s.

Test 1.07

Pipes were initially full of air and air wasn't refilled during this test. Airflow emerged from pipe 2 at t = 0 s and from pipe 1 at t = 0.2 s. Airflows didn't hit to the bottom of the pool. Between 3...8 s it was impossible to observe the airflows, because backflow carried a lot of small air bubbles to the lower part of the pool. Air was blown to the pool for about 14 s.

Test 1.08

The only difference to the previous test was the air refill. Due to that air was blown for about 38 s. After t = 3 s, small bubbles covered the pipe and backflow carried small bubbles to the lower part of the pool for the duration of the test. The lower part of the pool was full of small bubbles during the first 20 s.

3.1.2 Tests 3.01-3.09

This experiment series consisted of nine separate tests with the blowdown pipe DN 150 (Ø168.3x3.0). Initially the pool level was 3.2 m and the water temperature approx. 11°C. Test matrix for the experiments is shown in the Table 4.

Table 4. Test matrix for experiments in series 3.

Test	Pressure in tanks (bar)	Air refill during test (Y/N)	Pipe (1/ 2/ 1&2)	Initial water level in pipes (full/empty)
3.01	7.2	N	2	full
3.02	7.7	Y	2	full
3.03	7.4	N	2	empty
3.04	7.9	Y	2	empty
3.05	7.3	N	1&2	full
3.06	7.7	Y	1&2	full
3.07	7.3	N	1&2	empty
3.08	7.3	N	1	empty
3.09	7.7	Y	1&2	empty

The upper limit of the measuring range of the vortex volume flow meters was exceeded also in every single test of this series. Mass flow rates and velocities of air in every measurement time step were calculated afterwards for test 3.01 and 3.08 according to the procedure described in section 3.1.1. Again polynomial curve fits were made to adapt airflow velocities to the other experiments in this series.

Test 3.01

The first test of this series was made with pipe 2 only. The pipe was initially filled with water to the pool level and air wasn't refilled during the test. Pressure tanks were pressurized to 7.2 bar. Because the inner diameter of the blowdown pipe was much smaller than in previous test series, the maximum airflow velocity was correspondingly much higher: 67 m/s. At t = 4.0 s, the velocity had decreased to 30 m/s. After t = 17.5 s, air wasn't blown down to the pool anymore. The airflow velocity was then 3.7 m/s and the absolute pressure in the tanks 1.4 bar.

Jet emerged from the pipe outlet at t = 0 s and hit strongly to the bottom of the pool. At t = 0.3 s, the width of the flow was about 1.1 m and it still had a contact with the bottom. At t = 0.4 s, the airflow had risen from the bottom. At t = 0.5 s, the diameter of the

forming bubble was 1.5 m. A little bit later at t = 0.6 s, the bottom of the bubble was on the level of the pipe outlet and the diameter of the bubble had increased to the value of 1.6 m. When the bottom of the bubble reached the level of the fictional ECCS strainer's top the diameter was already 1.8 m. This happened at the moment t = 0.8 s.

The diameters of the next three forming bubbles were about 0.6-0.7 m and they had no contact with the bottom of the pool.

At t = 1.0 s, the first small air bubbles had risen from the bottom of the pool to the level of the pipe outlet. It was impossible to observe bubbles forming at the pipe outlet from the pool windows after t = 1.8 s, because raising small bubbles covered the pipe.

At t = 1.6 s, the surface of the pool was reached by raising cloud of bubbles. After that, the pool surface splashed strongly.

After t = 12 s, it was again possible to view the airflows from the pool windows. The airflow velocity was then about 8.5 m/s. The diameters of the forming bubbles were no more than 0.5 m. Airflow velocity as a function of time is presented in Figure 7. The moment t = 0 s in the text corresponds to the moment t = 1571.5 s in Fig. 7.

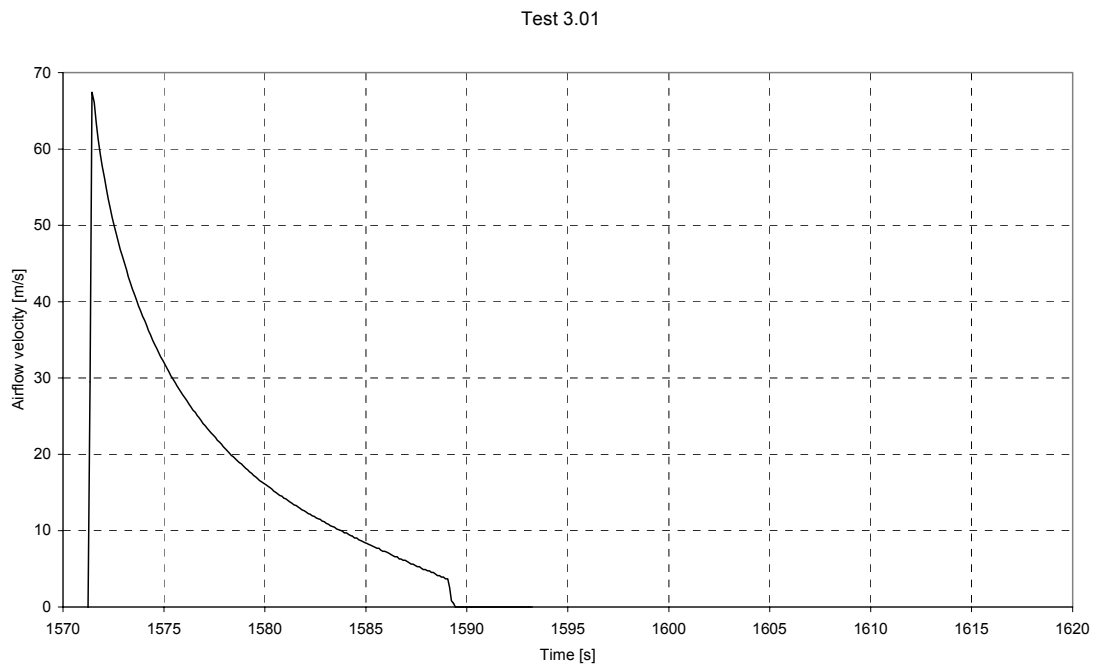

Figure 7. Airflow velocity during test 3.01.

Test 3.02

In this test, air was refilled. The initial pressure was 7.7 bar and the maximum airflow velocity 76 m/s. It took 16 s before the velocity had decreased to 30 m/s. Air was blown to the pool for about 47 s. The pressure was then still more than 2 bar and the velocity about 12 m/s. The bubbles formed the same way as in the previous test. In the period 1.5...23 s, it was impossible to observe the airflows, because the pool was full of small air bubbles. After that, some small bubbles still circulated from the upper part of the pool to the lower part. Airflow velocity as a function of time has been plotted in Fig. 8. The time scale in Figures 7 and 8 is similar.

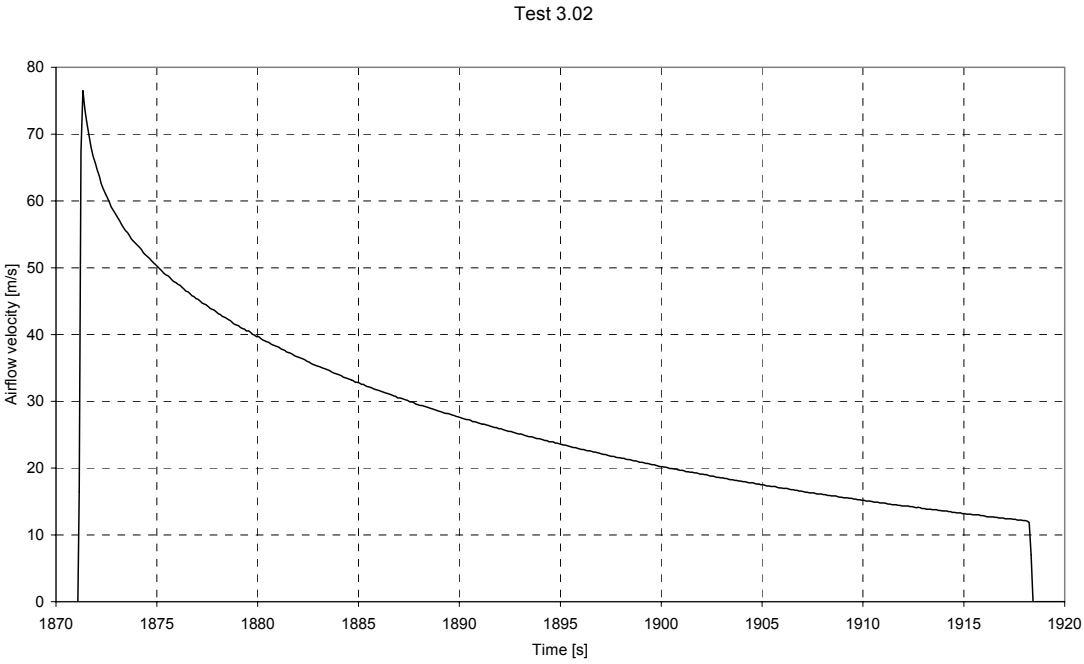

Figure 8. Airflow velocity during test 3.02.

Test 3.03

In the beginning of the test pipe 2 was full of air. Air wasn't refilled. Air was blown to the pool for about 17 s and the maximum airflow velocity was 70 m/s.

At t = 0.2 s, the bottom of the first bubble was 0.5 m below the pipe outlet. The diameter of the bubble was about 0.9 m.

At t = 0.4 s, the diameter of the bubble was 1.3 m and the bottom was on the level of the pipe outlet.

At t = 0.6 s, the bottom of the bubble was on the level of the fictional ECCS strainer's top and the diameter was 1.7 m.

Jets following the formation of the first bubble pushed their way very close to the pool's bottom and had diameters of 0.5-0.7 m. They rose upwards close to pipe. The amount of air was negligible farther away in the pool.

At about t = 1.4 s, the cloud of rising bubbles broke the pool surface. At about t = 4 s, the backflow had carried so much small bubbles to the lower part of the pool that it wasn't possible to observe the airflows. The amount of small bubbles had reduced after the moment t = 14 s so much that it was again possible to observe the airflows from the pool windows. The diameters of the forming bubbles were about 0.5 m and the jets pushed their way no more than 0.1 m below the pipe outlet.

Test 3.04

The only difference to the previous test was the air refill. Air was blown to the pool for more than 30 s and the maximum airflow velocity was as high as 80 m/s.

Bubbles formed the same way as they did in the previous test. It took also about 4 s before the lower part of pool was full of small bubbles. After t = 16 s, the pipe outlet was observed again, though the lower part of the pool was quite full of small bubbles. Last airflow pushed its way to the pool at t = 30 s.

Test 3.05

Air was blown to the pool by using both pipes in parallel. Pipes were initially filled with water to the pool level and air wasn't refilled during the test. The maximum velocity was 69 m/s. It took only 2 s, before the velocity reduced to 30 m/s. Air was blown to the pool for about 11 s and the velocity was then under 1 m/s.

From pipe 2 jet emerged at t = 0 s and from pipe 1 at t = 0.2 s. Both jets hit to the bottom of the pool. At t = 0.3 s, the bubbles touched each other.

The first small bubbles had risen from the bottom to the level of the pipe outlet at t = 1 s. At t = 1.6 s, the pool surface was reached by raising bubbles.

After t = 2.5 s, it wasn't possible to observe the airflows. For the duration of the test (11 s), there were plenty of small bubbles in the pool.

Test 3.06

Air was refilled. It took 6 s, before the velocity was 30 m/s. Air was blown for about 32 s and the velocity was then still more than 6 m/s. Between t = 2.5...20 s, it was impossible to observe airflows from the pool windows.

Test 3.07

The pipes were initially full of air and air was not refilled during the test. Jet emerged from pipe 2 at t = 0 s and from pipe 1 at t = 0.2 s. Both jets pushed their way about 0.5 m below the level of the pipes outlets. Approximately at t = 3 s, the backflow had carried so much small bubbles to the lower part of the pool that the pipes weren't visible. After t = 9.5 s air wasn't blown to the pool anymore, but the pool was still full of small bubbles.

Test 3.08

The test was made using pipe 1 only. The pipe was full of air and the initial pressure was 7.3 bar. Air wasn't refilled during the test and the maximum airflow velocity was 70 m/s. The first bubble formed exactly the same way as in tests 3.03 and 3.04. At t = 4.3 s, the backflow had carried small bubbles to the level of pipe 2 outlet. Pipe 2 was covered completely by little bubbles, but pipe 1 wasn't. It was possible to observe the airflows as long as air was blown, about 15 s. The bubbles rose towards the pool surface close to the pipe. Only the backflow carried little bubbles farther to the pool. The frequency of bubble build-up at the blowdown pipe outlet could be calculated in this test, because the pipes were visible all the time. The frequency varied between 3-5 Hz. The frequency increased as the velocity decreased during the blast.

Test 3.09

The last test of the series was made in parallel with both pipes and air was also refilled. The pipes were full of air before air was blown. Airflows pushed their way to the pool exactly at the same time. The bubbles touched each other at the moment t = 0.25 s. The next airflows didn't touch each other. In period t = 2...15 s the pipes were not visible from the pool windows Air wasn't blown to the pool after the moment t = 33.5 s.

3.1.3 Summary of the experiments with blowdown pipes only

In the first stage, experiments were executed so that compressed air was blown to the pool through the blowdown pipes (DN150 and DN200 pipes). The first airflows hit to the bottom of the pool when the pipes were initially filled with water to the pool level. The diameters of the first forming large bubbles were approx. 1.6 m (DN150 pipes) and 1.3 m (DN200 pipes), when the bottoms of the bubbles were on the level of the pipe outlets. A lot of smaller air bubbles rose from the bottom of the pool as a result of the first hit to the bottom. During the blows the rising air lifted a large amount of water up to the surface, which was splashing strongly. Water circulated back down close to the wall of the pool. This backflow carried down a lot of smaller air bubbles. For these two reasons, the level of the pipe outlets was full of small air bubbles during the first 20 s. After that, the amount of the bubbles reduced so that it could be observed how the airflows rose towards the pool surface close to the pipes.

Figure 9 shows how the airflows penetrated to the pool when the pipes were initially filled with water to the pool level. Still pictures are from test 1.02. Respectively, Fig. 10 shows what happened when the pipes were initially full of air (test 1.04).

The jet emerging from the pipe.

The first airflow hit to the bottom of the pool.

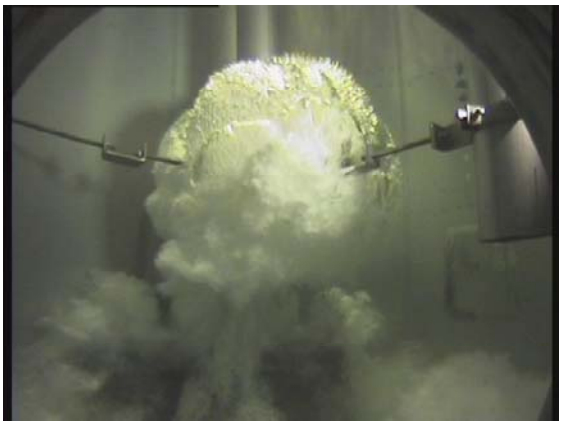

The moment when the bottom of the first bubble was on the level of the pipe outlet.

A lot of air rose from the bottom of the pool.

The lower part of the pool was full of small air bubbles during the first 20 s.

After 20 s, airflows could be seen rising upwards close to the pipe.

Figure 9. Airflows penetrating to the pool during test 1.02, where the blowdown pipe was initially full of water.

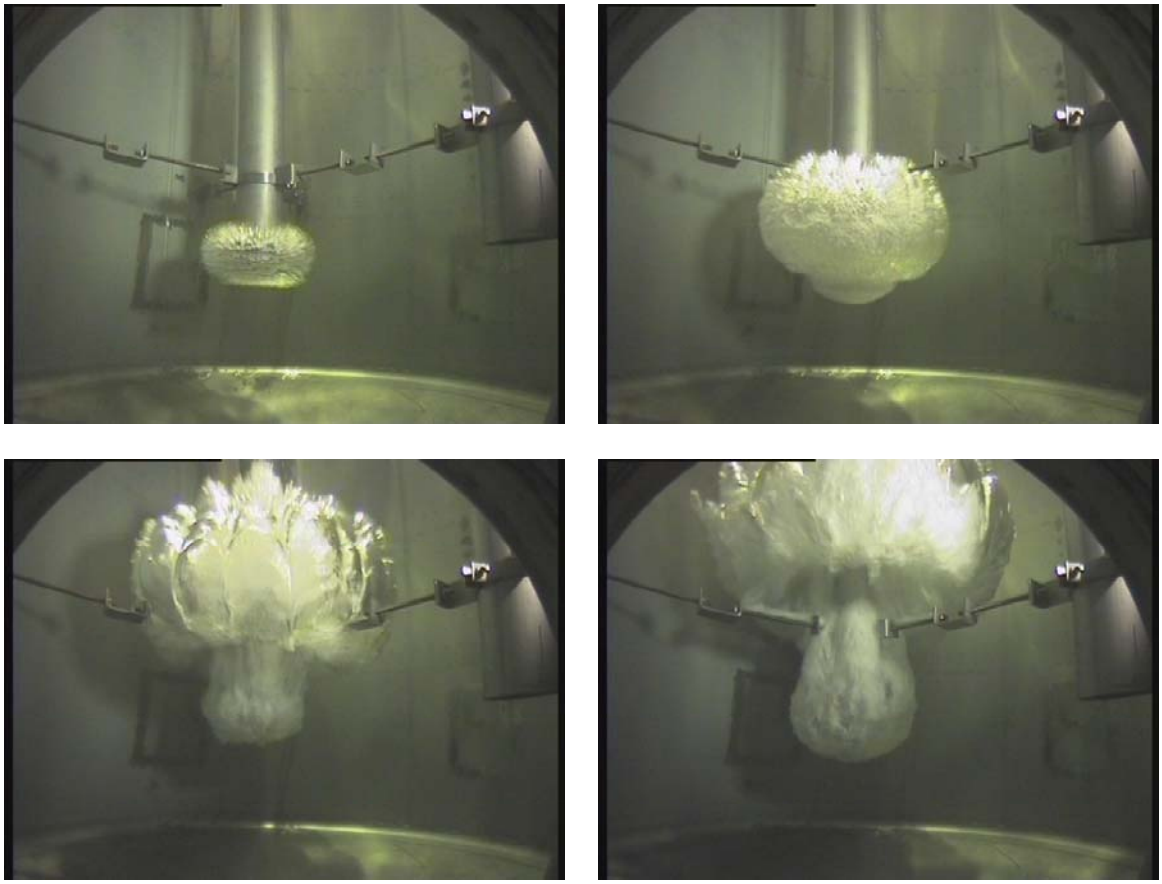

Figure 10. Airflows penetrating to the pool during test 1.04, where the blowdown pipe was initially full of air.

3.2 EXPERIMENTS WITH BLOWDOWN PIPES AND AN ECCS STRAINER

In the second stage, the ECCS strainer was installed inside the condensation pool. Air was blown to the pool exactly the same way as in the experiments in the first stage. The ECCS pump wasn't running. The idea of the experiments was to research the effect of the strainer on bubble behavior and to find out if bubbles flow inside the ECCS strainer or not.

Five video cameras were used in this stage. Color Submergible Camera was installed inside the strainer on the bottom pointing upwards to see if any air bubbles were carried there or not. Four Sony cameras filmed the strainer in different directions through the pool windows.

3.2.1 Tests 5.01-5.09

Nine separate tests were carried out with the pipe diameter DN150. The initial pool level was again 3.2 m. During the first three tests the water temperature was 10°C and during the rest of the tests 14°C. Test matrix for experiments with the ECCS strainer is shown in Table 5. Apart from small differencies in the tank pressures it is similar to the test matrix for tests 3.01-3.09.

Table 5. Test matrix for experiments in series 5.

Test	Pressure in tanks (bar)	Air refill during test (Y/N)	Pipe (1/ 2/ 1&2)	Initial water level in pipes (full/empty)
5.01	7.4	N	2	full
5.02	7.8	Y	2	full
5.03	7.4	N	2	empty
5.04	7.9	Y	2	empty
5.05	7.4	N	1&2	full
5.06	7.8	Y	1&2	full
5.07	7.2	N	1&2	empty
5.08	7.3	N	1	full
5.09	7.8	Y	1&2	empty

Airflow velocities were adapted by polynomial curve fits according to the procedure described in section 3.1.1.

Test 5.01

The first test of this series was made with pipe 2. This pipe is closer to the strainer (Fig. 3). The pipe was initially filled with water to the pool level (3.2 m). Air wasn't refilled and the blast lasted for 22 s.

The first jet hit to the bottom of the pool and the bubble formed the same way as in the previous tests. At about t = 0.2 s, the first forming bubble touched the ECCS strainer for the first time. The first bubble was so big that the upper part of the strainer was inside the bubble for a while. After t = 1.0 s, the bubble had no contact with the strainer anymore. Also the next airflows touched the strainer. In the period 3.5...10 s, it wasn't possible to observe the airflows from the pool windows. At t = 10 s, small bubbles had risen from the bottom of the pool above the strainer. The following airflows were so narrow that only part of them touched the top of the strainer.

The camera view inside the strainer showed how air pushed through the front side of the strainer. As air pushed through the screen plate, it broke into small bubbles. These bubbles didn't build up to bigger bubbles. They rose quickly towards the top of the strainer, and only there they built up to bigger bubbles. These bubbles exited from the strainer through the sides, when air was still blown to the pool. At about t = 5 s, there was no air bubbles inside the strainer anymore.

During the test some air bubbles also flowed to the backside of the strainer. The amount of bubbles that ended inside the strainer through the screen plate on the backside was negligible.

Airflow velocity and pressure difference over the strainer as a function of time have been plotted in Fig. 11. The pressure difference oscillated between positive and negative values with a time period of 0.5...0.8 s. Meanwhile, it took 0.2...0.4 s for one airflow to push its way from the pipe to the pool. So, the frequency of the pressure difference oscillation and of the bubble formation at the pipe outlet is not the same.

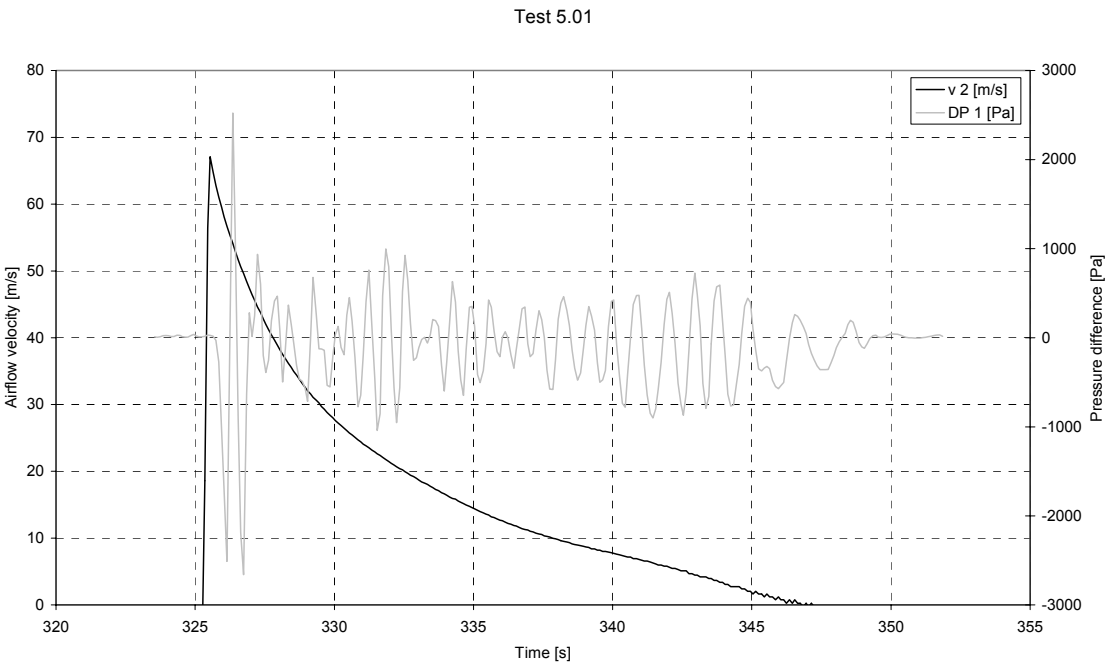

Figure 11. Airflow velocity (v2) and pressure difference over the strainer (DP1) during test 5.01.

Test 5.02

Air was now refilled and the blast lasted for almost 71 s. Again, the first bubble touched the strainer in the period between 0.2...1.0 s. Inside the strainer, there were air bubbles for approx. 6.0 s. In the period 3.5...22 s, it wasn't possible to observe the airflows. After that, the airflows had no contact with the strainer anymore. Airflow velocity and pressure difference over the strainer as a function of time are presented in Fig. 12.

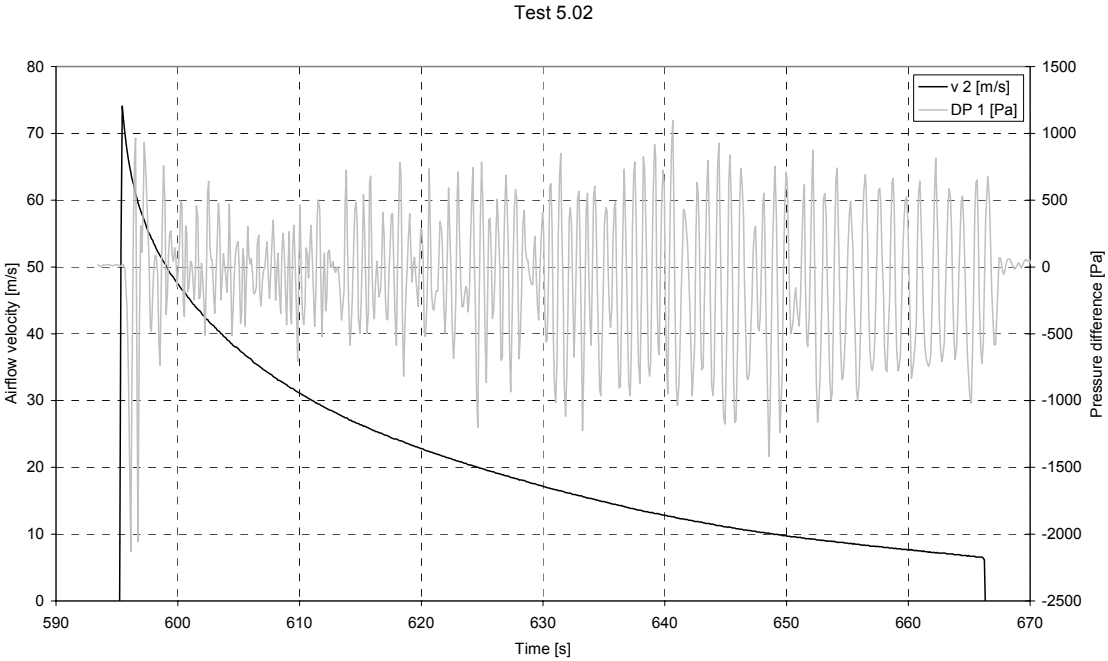

Figure 12. Airflow velocity (v2) and pressure difference over the strainer (DP1) during test 5.02.

Test 5.03

Pipe 2 was initially full of air. The first bubble touched the strainer in the period between 0.2...0.9 s. Also the next bubbles touched the strainer clearly. In the period 4...9, s it was impossible to observe airflows. After that period, only part of the airflows touched the top of the strainer. Inside the strainer, there were air bubbles for about 3 s. Backflow carried some small bubbles to the backside of the strainer, but these bubbles didn't end up inside the strainer. Air was blown to the pool for about 19 s.

Test 5.04

Pipe 2 was initially full of air and air was also refilled. Air was blown to the pool for about 68 s. Between 0.2...0.9 s the first bubble had a contact with the strainer. Air bubbles were observed inside the strainer for about 3 s.

Test 5.05

The test was made in parallel with both pipes initially filled with water to the pool level. During the test air wasn't refilled. The first airflows emerged to the pool almost at the same time. They both also hit to the bottom. Again, the first bubble that formed from pipe 2 touched the strainer at t = 0.2 s. During the blast a lot of small bubbles flowed to the backside of the strainer. At first, air pushed inside the strainer through the front side. About 1 s later, air started to push inside also through the screen plate on the backside. Compared to the previous tests bubbles were inside the strainer in a larger quantity and

for a longer time. Air was blown to the pool for about 13 s. Bubbles were detected inside the strainer for approx. 11 s.

Test 5.06

Air was now refilled and the blast lasted for more than 37 s. Air pushed inside the strainer very similarly as in the previous test. Inside the strainer, there was air for about 30 s.

Test 5.07

Pipes were initially full of air and air wasn't refilled. Airflows didn't hit to the bottom of the pool. Air was carried inside the strainer at first through the front side. A bit later, air pushed inside through the backside. Inside the strainer, there was air for about 11 s. Air was blown for about 16 s.

Test 5.08

This test was made with pipe 1 initially full of air and without the air refill. The distance from the strainer was so long that the airflows had no contact with the strainer. Very little air was detected inside the strainer between 5...14 s. Air was blown for about 20 s.

Test 5.09

The last test was made in parallel with pipes 1 and 2 initially full of air. Air was refilled during the test. Inside the strainer, there was air for about 30 s. Air was blown for about 41 s.

3.2.2 Summary of the experiments with blowdown pipes and an ECCS strainer

In the second stage, the ECCS strainer was installed inside the pool. Compressed air was blown to the pool through DN150 pipes. The purpose of the experiments was to study the distribution of air in the pool and the effect of the strainer on bubble behavior. Particularly, it was important to find out if any bubbles flowed inside the strainer. In the tests, the level of the ECCS strainer was full of air bubbles during the first 30 s. After that, air bubbles were seen rising towards the pool surface close to the pipes. Bubbles were also detected inside the strainer during the first 30 s.

Figure 13 shows how much air bubbles were detected inside the strainer during test 5.06. Figure 14 shows the situation outside the strainer at the same time.

The inside of the strainer before air was blown to the pool. Camera is on the bottom.

5 s.

10 s

15 s

20 s

After 30 s bubbles weren't detected inside the strainer anymore.

Figure 13. Still pictures from inside the strainer during test 5.06. The view is upwards from the bottom of the strainer and the pump intake pipe is on the left hand upper corner.

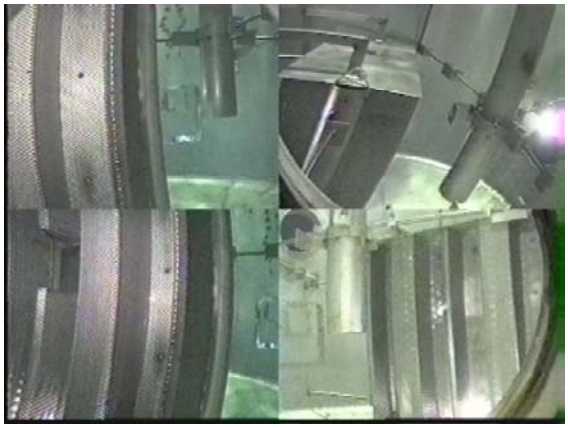

Four camera views from the pool before air was blown.

5 s

10 s

15 s

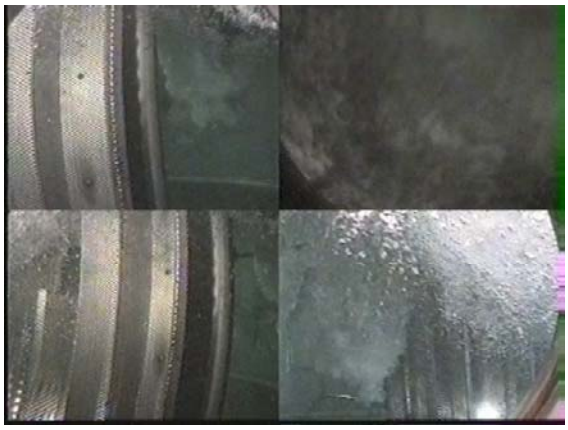

20 s

30 s

Figure 14. Still pictures from outside the strainer during test 5.06.

3.3 EXPERIMENTS WITH BLOWDOWN PIPES, AN ECCS STRAINER AND A PUMP

In the third stage, the pump and the adjoining piping were added to the test facility system with the ECCS strainer. The idea of the experiments was to find out the void fraction in the intake pipe during the blowdown and to study how the pump works in the presence of gas. In the tests, the pump was sucking water through the ECCS strainer with a constant volume flow rate when air was blown to the pool through the DN150 pipes as in the previous stage. Water was pumped back to the pool above the water level. This generated so-called micro bubbles to the pool.

The pump simulated the combined flow rate of a containment spray system 322 (75 kg/s) and a core spray system 323 (25 kg/s) pump. The flow rate through the pump was scaled so, that the metric flow velocity in the condensation pool was the same as in the plant conditions. The vertical cross-sectional areas of the strainers in the Olkiluoto plant and in the test facility are 8.9 m^2 and 1.0 m^2. The mass flow rate in the test facility can be scaled by using the ratio of these vertical cross-sectional areas: 100 kg/s / 8.9 = 11 kg/s. The first test series was made with this flow rate. Experiments were also made with other flow rate than 11 kg/s to find out the effect of the flow rate on the amount of gas bubbles in the intake pipe. Thus in the second test series the flow rate was 5.5 kg/s.

The horizontal part of the intake pipe just behind the strainer was made of transparent PMMA-pipe (Poly Methyl MathAcrylate). The length of the PMMA-pipe was 950 mm and inner/outer diameter 120/130 mm. A 300 mm part of PMMA-pipe was inside the pool and the rest was outside. This PMMA-pipe was filmed by a hand-held digital video camera recorder for visual observation of the void fraction, because the shutter speed of Sony digital video camera wasn't fast enough for fast flowing air bubbles. By using the hand-held camera it was possible to "freeze" bubbles on the TV screen. In this way, a rough estimation for void fraction was made. It has to be said that the accuracy of this estimation is few percentage units.

3.3.1 Tests 8.01-8.04

In the first test series, the initial pool level was 3.2 m and the water temperature 10°C. Water volumetric flow rate was 11 l/s. Test matrix for experiments is shown in Table 6.

Table 6. Test matrix for experiments in series 8.

Test	Pressure in tanks (bar)	Air refill during test (Y/N)	Pipe (1/ 2/ 1&2)	Initial water level in pipes (full/empty)
8.01	7.7	N	1	full
8.02	7.8	N	2	full
8.03	7.9	Y	1 & 2	full
8.04	8.0	Y	1 & 2	empty

Tests 8.01-8.02

First two tests were made so that air was blown to the pool only through one pipe at a time. In these tests, only a very small amount of air bubbles flowed through the intake pipe. The bubbles didn't form any continuous flow region in the pipe. Instead, there were single little bubbles flowing mostly in the upper part of the pipe. During test 8.02 more bubbles were observed than during test 8.01 because pipe 2 was nearer to the strainer. In both tests, it took about 1 s before the first bubbles were visible inside the PMMA-pipe. After 15 s, the amount of bubbles was negligible. In both tests, air was blown to the pool for about 23 s. Because the amount of bubbles was so small the void fraction was estimated to be very close to zero.

Before air was blown to the pool the pressure difference over the pump was 4.7 bar in both tests. Air blowdown had no effect on the pressure difference and on the water flow. Figure 15 shows airflow velocity, pressure difference over the pump and water volumetric flow rate during test 8.02.

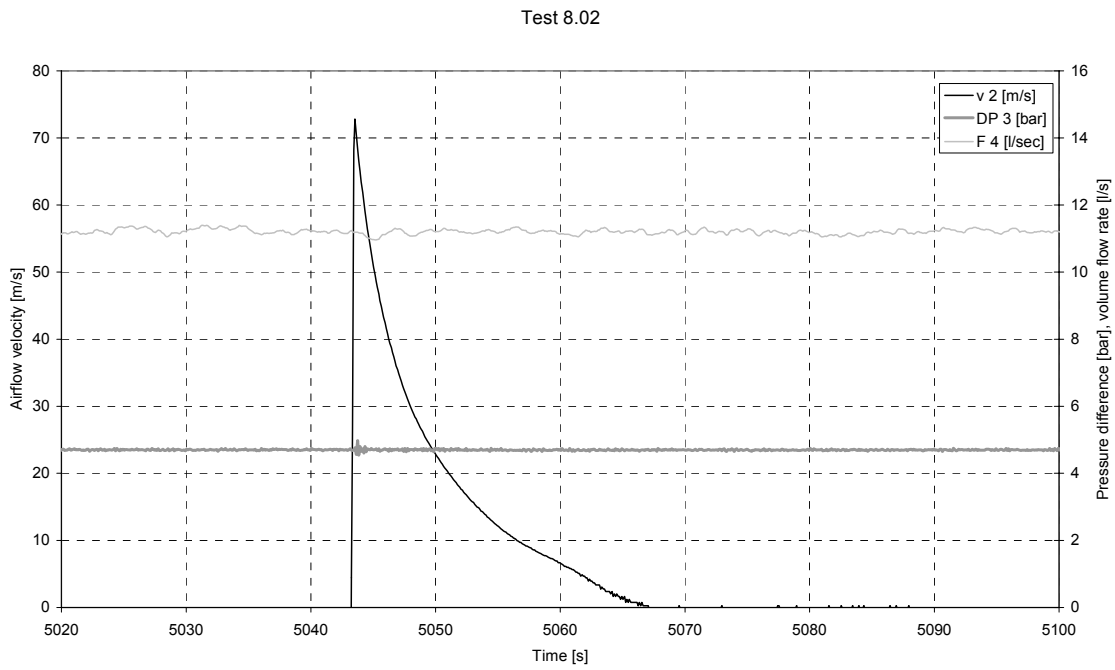

Figure 15. Airflow velocity (v2), pressure difference over the pump (DP3) and water volumetric flow rate (F4) during test 8.02.

Tests 8.03-8.04

The next two tests were made in parallel with two pipes. During these tests significantly more air flowed inside the intake pipe than during tests with one pipe. Again it took about 1 s before the first bubbles were visible inside the PMMA-pipe. After about 20 s, the amount of bubbles was negligible in both cases.

Some kind of approximation for volume void fraction inside the PMMA-pipe was done. Volume void fraction (ε) is defined as:

$$\varepsilon = \frac{V_G}{V_G + V_L}, \tag{5}$$

where V_G is the volume occupied by air and V_L is the volume occupied by water inside the PMMA-pipe. Naturally, the sum of V_G and V_L is equal to the volume of the PMMA-pipe.

The volume occupied by air was estimated by counting the number of the bubbles on the TV screen from freeze-frames. All bubbles were assumed to be spherical and equal in size. The highest value for volume void fraction, which was estimated in this way, was about 5%. However, this maximum value lasted only for a few seconds. Therefore the pressure difference or the flow weren't affected even though they should have been according to the reference 2. The maximum value was estimated during test 8.04. The bubbles also built up an air pocket into the first downward flow elbow which was just after the PMMA-pipe. This was sometimes in sight during test 8.04 but not during test 8.03. During test 8.04 more bubbles flowed in the PMMA-pipe than during test 8.03.

Figure 16 shows airflow velocities, pressure difference over the pump and water volumetric flow rate during test 8.04.

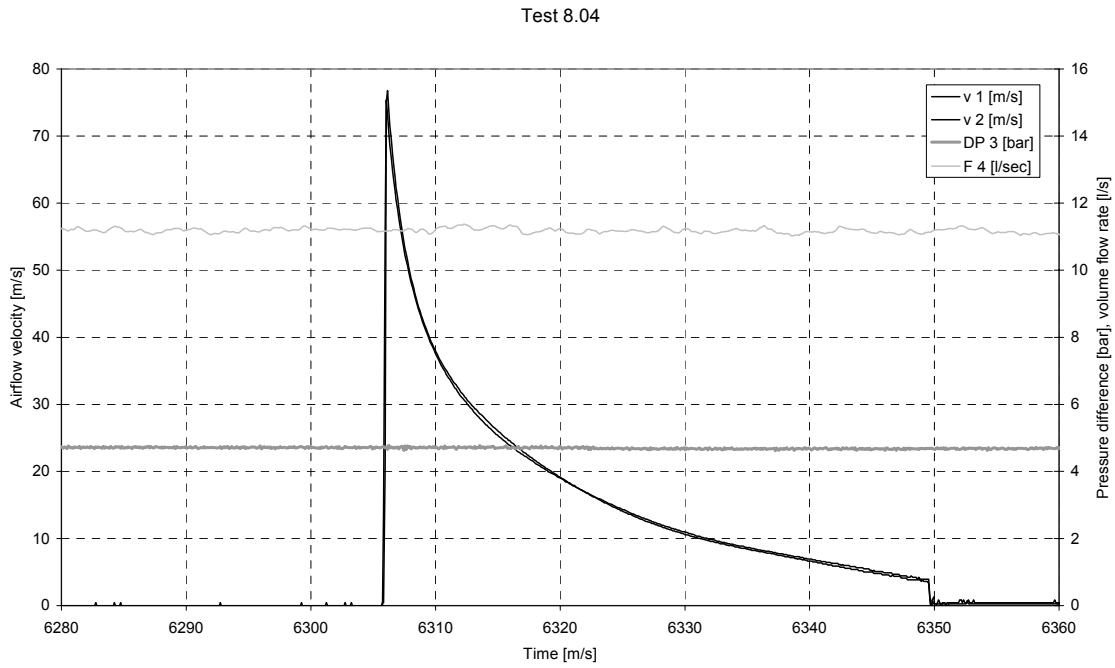

Figure 16. Airflow velocities (v1, v2), pressure difference over the pump (DP3) and water volumetric flow rate (F4) during test 8.04.

3.3.2 Tests 13.01-13.04

In the second integral test series, the initial pool level was 3.2 m and the water temperature 20°C. Volumetric flow rate was only half of what it was in the previous test series: 5.5 l/s. Test matrix for experiments is shown in Table 7.

Table 7. Test matrix for experiments in series 13.

Test	Pressure in tanks (bar)	Air refill during test (Y/N)	Pipe (1/ 2/ 1&2)	Initial water level in pipes (full/empty)
13.01	7.5	N	2	full
13.02	7.5	N	1	full
13.03	7.8	Y	1 & 2	full
13.04	7.9	Y	1 & 2	empty

In the tests, the amount of air bubbles in the PMMA-pipe was so negligible that volume void fraction was estimated to be very close to zero. During the tests the pump pumped water back to the pool above the pool surface. For this reason, very small air bubbles were generated to the pool and were also visible in the PMMA-pipe. When air was blown to the pool the amount of air bubbles didn't seem to increase in the PMMA-pipe.

3.3.3 Summary of the experiments with blowdown pipes, an ECCS strainer and a pump

In the third stage experiments, the pump was pumping water with a constant flow rate when air was blown to the pool. On the level of the ECCS strainer, a lot of air bubbles were detected during the first 30 s. After that, one could see airflows rising upwards close to the pipes. At volumetric flow rate of 5.5 l/s, air bubbles weren't detected inside the transparent intake pipe. At flow rate of 11 l/s (scaled to the Olkiluoto plant conditions) air bubbles were visible for approx. 20 s when air was blown to the pool through two blowdown pipes. A rough estimation for volume void fraction was made from video frames; 5%. This value was observed only for a few seconds. The pump head and flow didn't decline during air blowdown to the pool. Figure 17 shows air bubbles flowing in the intake pipe during test 8.04. During this test the amount of air bubbles was the highest of all tests.

The intake pipe before air was blown to the pool.

After 5.5 s the amount of the bubbles was still negligible.

Between 6-10 s the void fraction was on the highest level.

After 20 s, the amount of the bubbles was negligible again.

Figure 17. Still pictures from the intake pipe during test 8.04.

3.4 EXPERIMENTS WITH A PUMP AND NON-CONDENSABLE GAS

In the fourth stage, the performance of the pump was researched. Now the test facility pump simulated a containment spray system 322 pump in plant conditions (rated flow 75 kg/s at nominal speed 2970 rpm). The idea of the experiments was to find out how much air can be injected into the intake pipe before the pump stops working properly.

Pressurized air was blown from the pneumatic system directly into the pump intake pipe when the pump was sucking water through the ECCS strainer. The flow rate of pressurized air was increased step by step until volume flow rate and delivery head lift collapsed. After that, airflow wasn't increased anymore. Air was blown into the intake pipe through a pressure reduction valve for better control of the volumetric flow rate.

The volumetric flow rate of water in the intake pipe and also the flow rate of injected air were measured. Thus flow rates of both phases to the pump were known. The volume

fraction of air in the pressure of the intake pipe was calculated by using the following equation:

$$Volume\ fraction = \frac{q_{v,air}}{q_{v,water} + q_{v,air}}, \tag{6}$$

where $q_{v,air}$ and $q_{v,water}$ are volumetric flow rates of air and water, respectively.

3.4.1 Tests 12.01-12.03

Three separate tests were made in the test series. During the tests the initial water level was about 4.0 m and the temperature varied between 16-19°C. Because the intake pipe was 5.0 m below the water level, pressure in the pipe was about 1.5 bar (air pressure + hydrostatic pressure). A throttle control in the pressure pipe was used to adjust water flow rate to three different values: 75, 57 and 25 l/s at nominal speed 2970 rpm. Test matrix for experiments is shown in Table 8.

Table 8. Test matrix for experiments in series 12.

Test	q_v pump [l/s]	Water temp. [°C]
12.01	75	18
12.02	57	16
12.03	25	19

The main objective of the test series was to find out the critical value of air volume fraction that declines performance of the pump.

Test 12.01

In the first test, the pump was sucking water at a volumetric flow rate of 75 l/s, before pressurized air was injected into the intake pipe. Before air was injected the pressure difference over the pump was 6.3 bar. Because the pressure difference over the pump and the volumetric flow rate in the piping were measured the delivery head lift can be calculated by using the next equation:

$$H = \frac{\Delta p}{\rho g} + \frac{v_p^2 - v_i^2}{2g}, \tag{7}$$

where Δp is pressure difference over the pump,
ρ is density of water (998.6 kg/m^3 at 18°C),
g is gravitational constant (9.81 m/s^2),
v_p is water velocity in the pressure pipe,
v_i is water velocity in the intake pipe.

By inserting numerical values a 66 m delivery head lift was calculated.

A 2.0 l/s (normalized to the pressure of the intake pipe 1.5 bar) injection of air into the intake pipe had no effect on the pressure difference and on the volumetric flow rate. A volume fraction of air was then approx. 3%. When airflow was increased to 2.2 l/s the water volumetric flow rate suddenly dropped to 63 l/s and the pressure difference to 4.2 bar. The pump worked at this flow rate and pressure difference more than 100 s before air injection was switched off. After that, water volumetric flow rate and pressure difference over the pump normalized back to the original levels in a few seconds.

During the test the pump ran normally and signs of cavitation weren't detected. Before air was blown into the intake pipe the pressure piping after the throttle made quite a lot of noise. After air injection was started, the noise reduced considerably. Volumetric flow rates of airflow and water, pressure difference over the pump and volume fraction of air during test 12.01 are presented in Figures 18 and 19.

Test 12.02

In the second test, the pump was pumping water at a volumetric flow rate of 57 l/s at 2970 rpm before air was blown into the intake pipe. The pressure difference over the pump was 8.6 bar. That corresponded to the head of 89 m. Again, airflow was increased step by step until the pump performance collapsed.

It was possible to increase the airflow to 2.4 l/s (normalized to the pressure of the intake pipe 1.5 bar) with only a minor change in the water volumetric flow rate and in the pressure difference. Volume fraction in the intake pipe was then about 4%. When airflow was increased to 2.5 l/s the pressure difference dropped from 8.2 to 5.3 bar and the water volumetric flow rate to 47 l/s. Due to the fact that the pump operated closer to its efficiency peak at 60 l/s it was possible to inject more air in test 12.02 than in test 12.01. Volumetric flow rates of airflow and water, pressure difference over the pump and volume fraction of air during test 12.02 are presented in Figures 20 and 21.

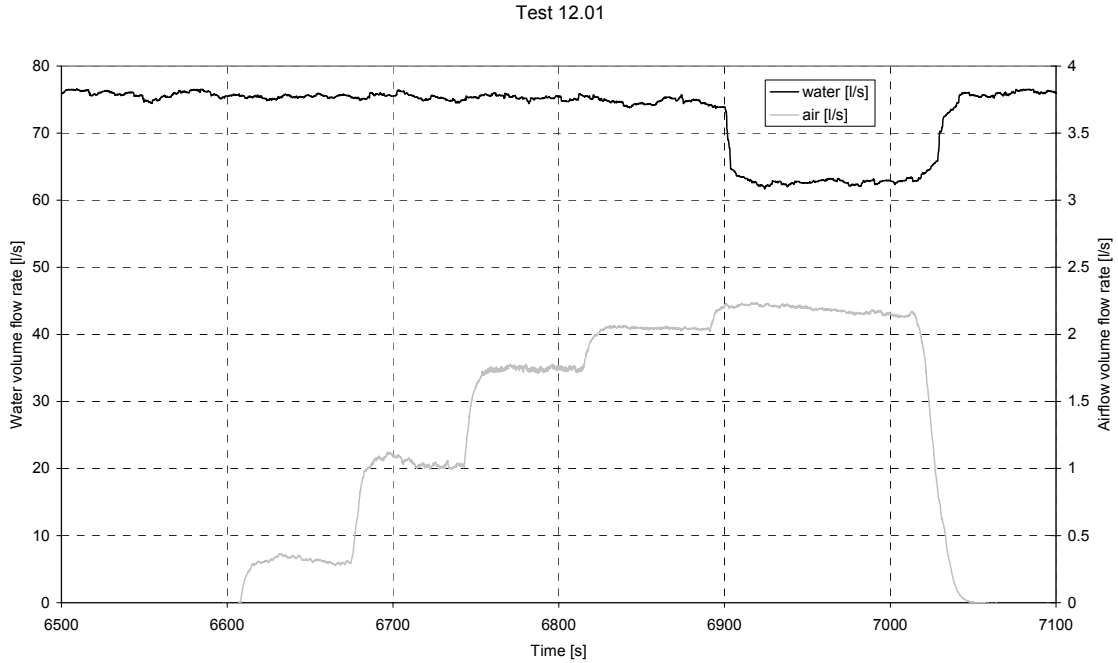

Figure 18. Volumetric flow rates of airflow and water during test 12.01.

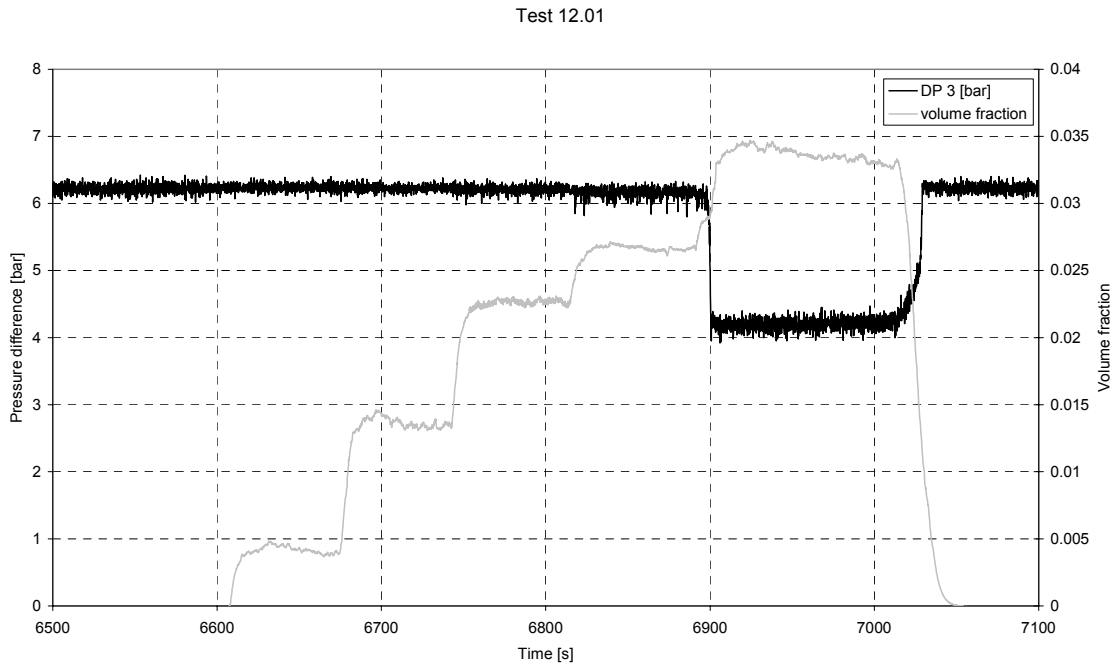

Figure 19. Pressure difference over the pump (DP3) and volume fraction during test 12.01.

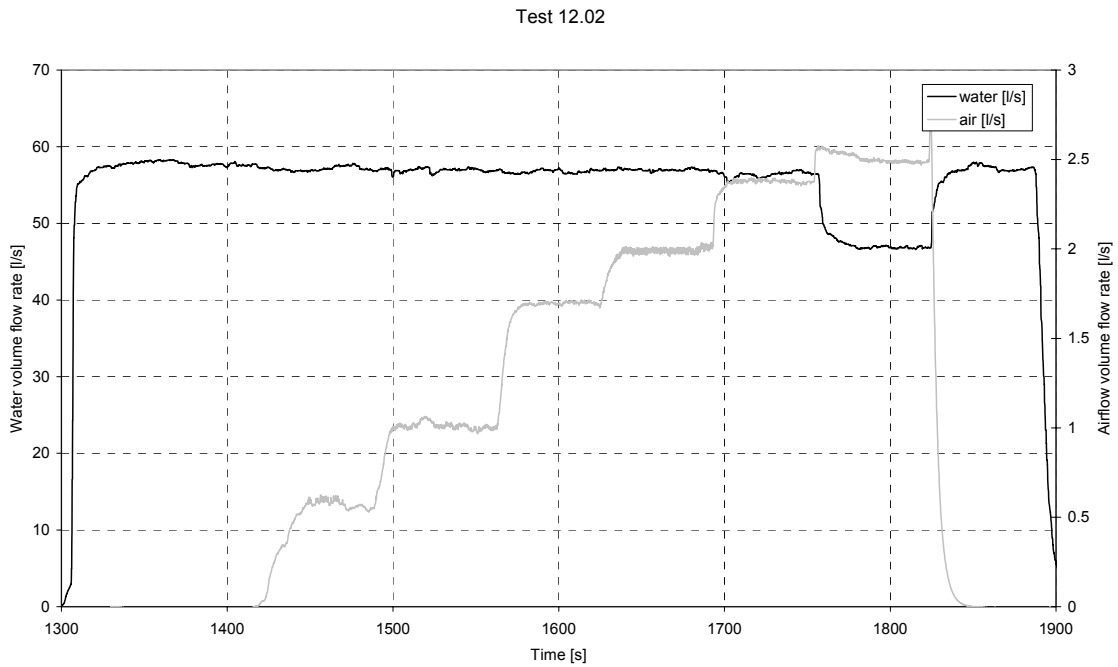

Figure 20. Volumetric flow rates of airflow and water during test 12.02.

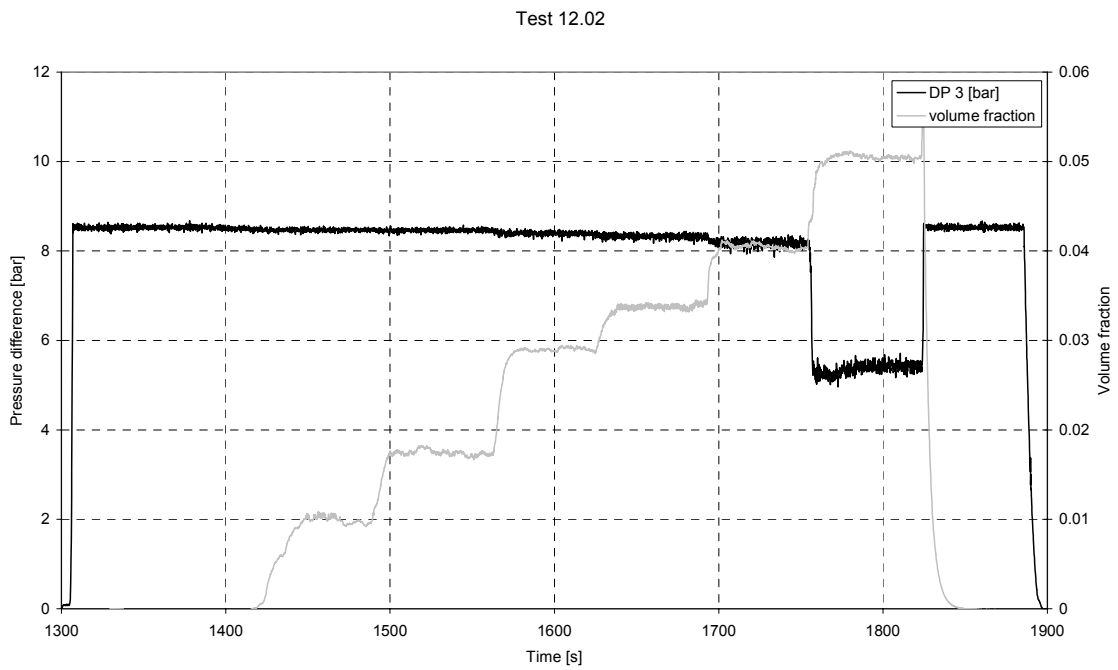

Figure 21. Pressure difference over the pump (DP3) and volume fraction during test 12.02.

Test 12.03

In the third test, the water volumetric flow rate was approx. 25 l/s and the pressure difference over the pump 10.1 bar (corresponding to the head of 103 m) before air was injected. With more than 2.0 l/s (normalized to the pressure of the intake pipe 1.5 bar) injection of air the pressure difference dropped to 0 bar and the pump wasn't able to pump water anymore. The pump chamber was full of air and the pump worked as "a blower". The pump ran smoothly and didn't make any abnormal noises. When 2.0 l/s of air was injected the pressure difference over the pump was 8.5 bar and the volume fraction as high as 7% in the intake pipe. After air injection was stopped, the pressure difference and water volumetric flow rate normalized quickly back to the levels were they were before air wasn't injected into the intake pipe. Figures 22 and 23 show this.

In these tests, the gauged heads at the nominal speed of 2970 rpm corresponding to flow rates 75 l/s, 57 l/s and 25 l/s were 66 m, 89 m and 103 m. These values were compared to the delivery head lifts reported by the pump manufacturer KSB AG. In all three cases, the gauged heads fitted well on the delivery head lift curve. The performance curves for the pump as a function of volume flow rate at the nominal speed of 2970 rpm are presented in appendix 2. The impeller diameter of the test pump was 264 mm. The right curves have been marked with numbers 1.1 and the rated operating point with a triangle symbol.

According to reference 2 (in the case of inlet pressure 2.5 bar abs.) the flow of centrifugal pumps may collapse even at the best effeciency point if air fraction is more than 5 to 7%. So, the findings of this test series correspond fairly well to the results presented in reference 2.

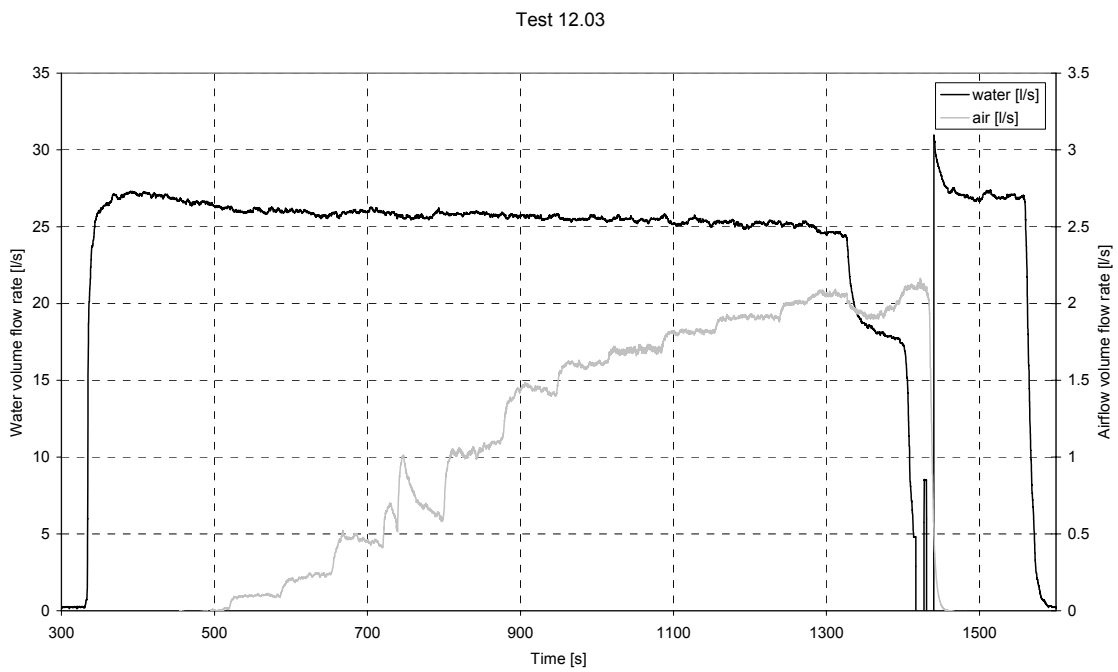

Figure 22. Volumetric flow rates of air and water during test 12.03.

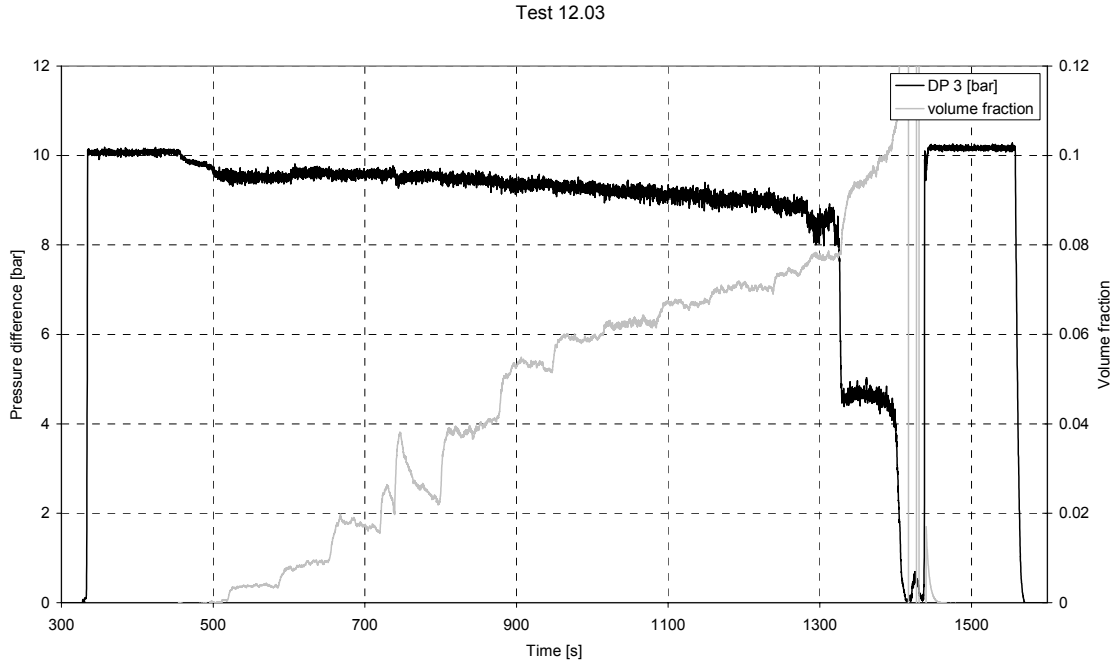

Figure 23. Pressure difference over the pump (DP3) and volume fraction during test 12.03.

3.4.2 Tests 10.03 & 11.01

Two tests were made in the test series. The initial water level in the pool was 4.0 m and the temperature 14-15°C. Again, the throttle control in the pressure pipe was used to adjust the water volumetric flow rate to two different levels: 75 and 57 l/s at nominal speed 2970 rpm. Airflow was increased step by step until the maximum airflow was achieved. The pump was run for approx. 100 s with each airflow value. Test matrix for experiments is shown in Table 9.

Table 9. Test matrix for experiments with pump and non-condensable gas.

Test	q_v pump [l/s]	Water temp. [°C]
10.03	75	14
11.01	57	15

Test 10.03

The pump was sucking water at a volumetric flow rate of 75 l/s at 2970 rpm, when pressurized air was injected to the intake pipe. Before injection the pressure difference over the pump was 6.3 bar (head 66 m). Maximum possible volumetric flow rate of air from pneumatic system was 7.5 l/s (normalized to the pressure of the intake pipe 1.5 bar). The pressure difference over the pump dropped then to 0.2 bar and the water volumetric flow rate to 15 l/s. Volume fraction of air was then 0.33. After air injection was switched off, the pressure difference over the pump and the volumetric flow rate

normalized quickly to the levels where they were before the injection. Figures 24 and 25 show volumetric flow rates of water and airflow, pressure difference over the pump and volume fraction during the test.

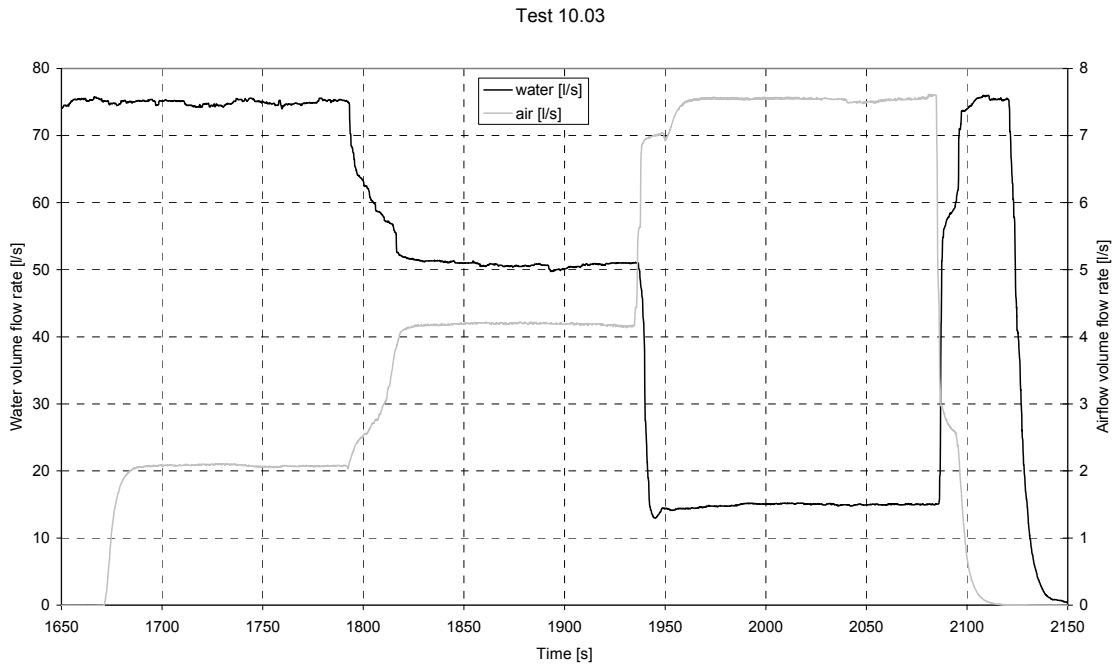

Figure 24. Volumetric flow rates of air and water during test 10.03.

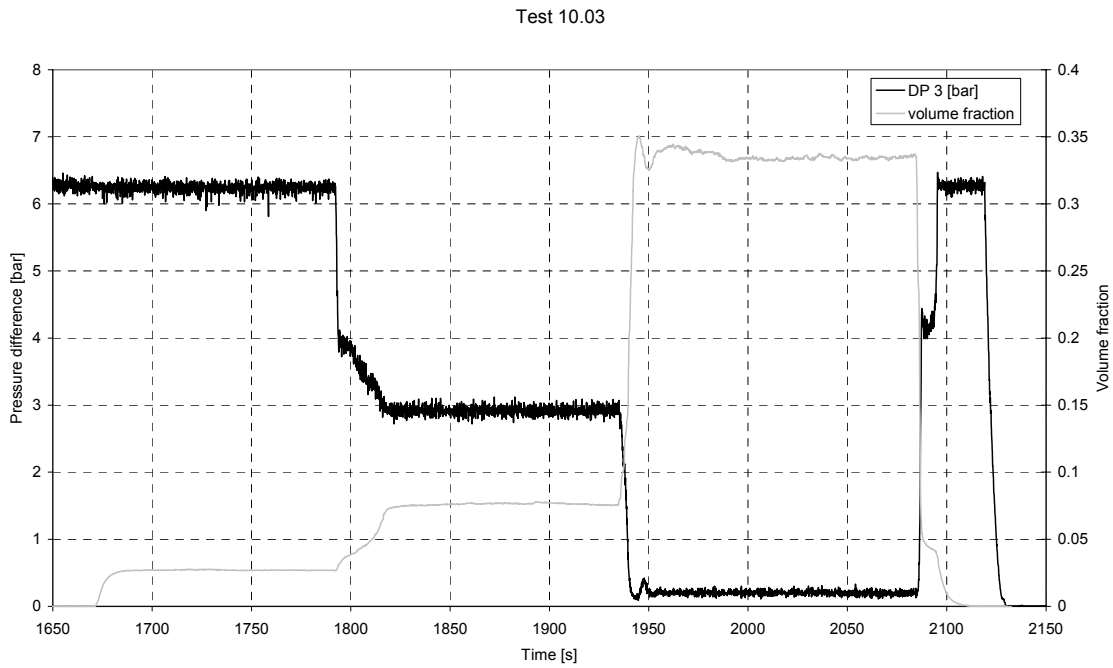

Figure 25. Pressure difference over the pump (DP3) and volume fraction during test 10.03.

Test 11.01

In the second test, the pump was pumping water at a volumetric flow rate of 57 l/s at 2970 rpm before air was blown to the pool. During the test a maximum airflow rate of 7.2 l/s (normalized to the pressure of the intake pipe 1.5 bar) from pneumatic system was reached. With 7.2 l/s the pressure difference over the pump dropped to 0.1 bar but the pump still pumped water back to the pool at a volumetric flow rate of 9 l/s. Volume fraction was then as high as 0.45. When air wasn't blown into the intake pipe anymore the pressure difference over the pump and the water flow rate normalized back to the original levels. Figures 26 and 27 show volumetric flow rates of water and airflow, pressure difference over the pump and volume fraction during the test.

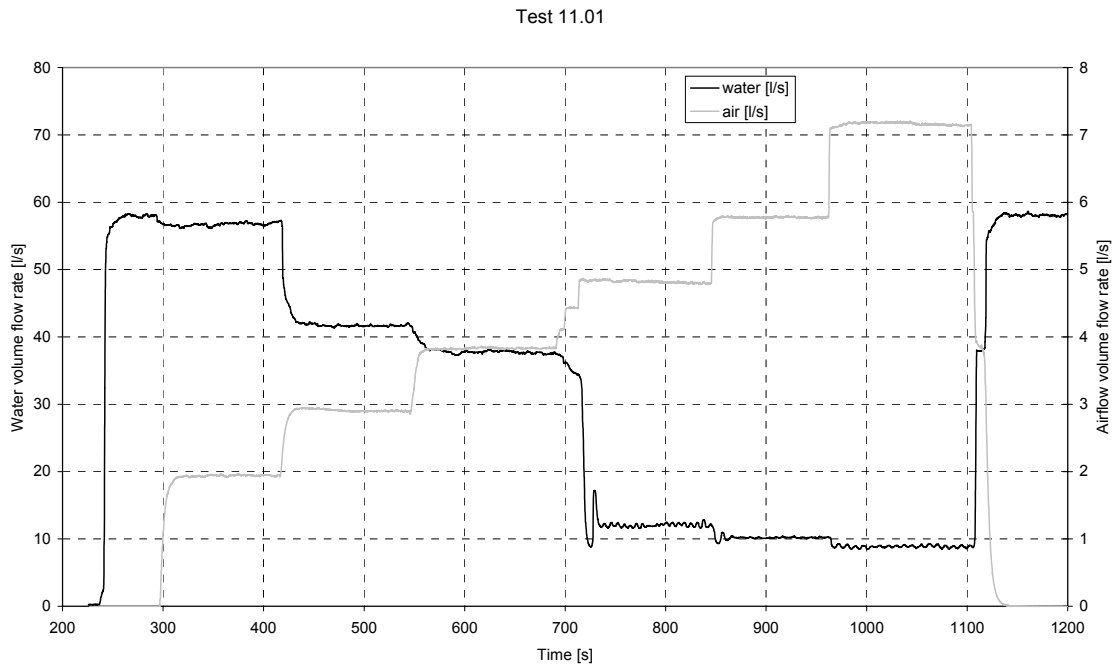

Figure 26. Volumetric flow rates of air and water during test 11.01.

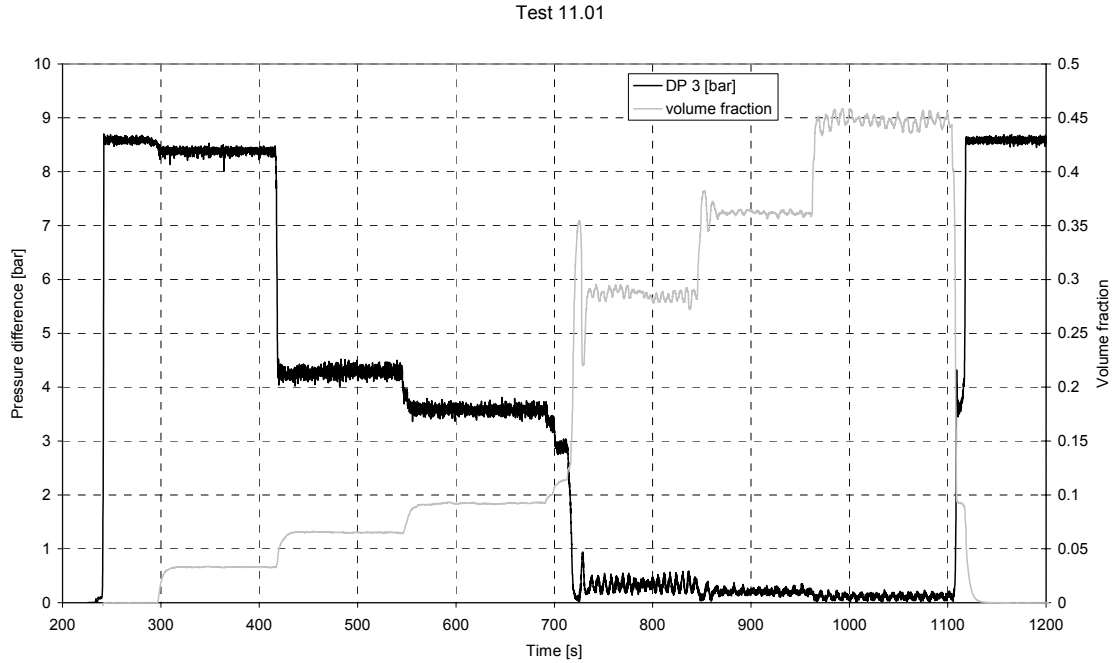

Figure 27. Pressure difference over the pump (DP3) and volume fraction during test 11.01.

3.4.3 Tests 16.01-16.02

Two tests were made in the last test series. The initial water level in the pool was 4.0 m and the temperature 17-18°C. Again the throttle control in the pressure pipe was used to adjust the water volumetric flow rate to two different levels: 25 and 12.5 l/s at the nominal speed of 2970 rpm. Test matrix for experiments is shown in Table 10.

Table 10. Test matrix for experiments in series 16.

Test	q_v pump [l/s]	Water temp. [°C]
16.01	25	17
16.02	12.5	18

Test 16.01

In the first test, the water volumetric flow rate was 25 l/s and the pressure difference over the pump 10.1 bar before air was injected. So much air was injected into the intake pipe that the pump wasn't able to pump water anymore. The pump worked as "a blower" more than 100 s before air injection was switched off. After that, the pressure difference and the flow rate normalized quickly back to the levels where they were before air injection was started. During the test the pump wasn't damaged. Figure 28 shows the volumetric flow rates of air and water and the pressure difference over the pump during the test.

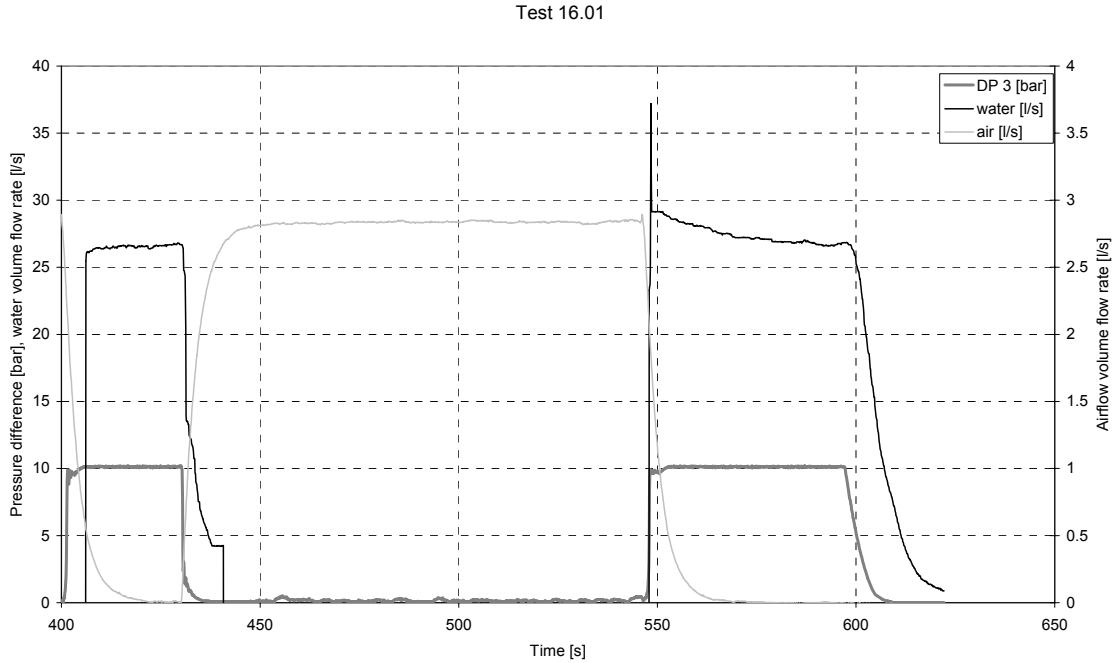

Figure 28. Pressure difference over the pump (DP3) and volumetric flow rates of air and water during test 16.01.

Test 16.02

In the beginning of the test, the pump was pumping water at a volumetric flow rate of about 12.5 l/s at 2970 rpm. This corresponds to the 323-pump flow rate of 25 kg/s in the plant conditions. The pressure difference over the pump was the same as in the previous test; 10.1 bar (head 103 m). A rotameter was used for the measuring of the airflow volumetric flow rate because the amount of air was too low for the vortex flowmeter that was used during previous tests. At first, airflow was increased step by step. When airflow volumetric flow rate reached 1.0 l/s (normalized to the pressure of the intake pipe) the pressure difference over the pump collapsed from 8.5 bar to 6.5 bar. After that, airlow was increased to 1.1 l/s. The pressure difference and water volumetric flow rate collapsed totally. The pump was run for more than 100 s in these circumstances before air injection was switched off. Again the flow and the pressure diffence normalized to the original values but more slowly, than before. Now it took about 30 s to do so. At 4320 s, airflow was set to 1.1 l/s at once and again the pressure difference and water volumetric flow rate collapsed totally. After 100 s, air injection was switched off. Again, it took approx. 30 s before the flow and the pressure diffence reached the original levels. After the test, the pump was undamaged. Figures 29 and 30 show volumetric flow rates of air and water, pressure difference over the pump and volume fraction during the test.

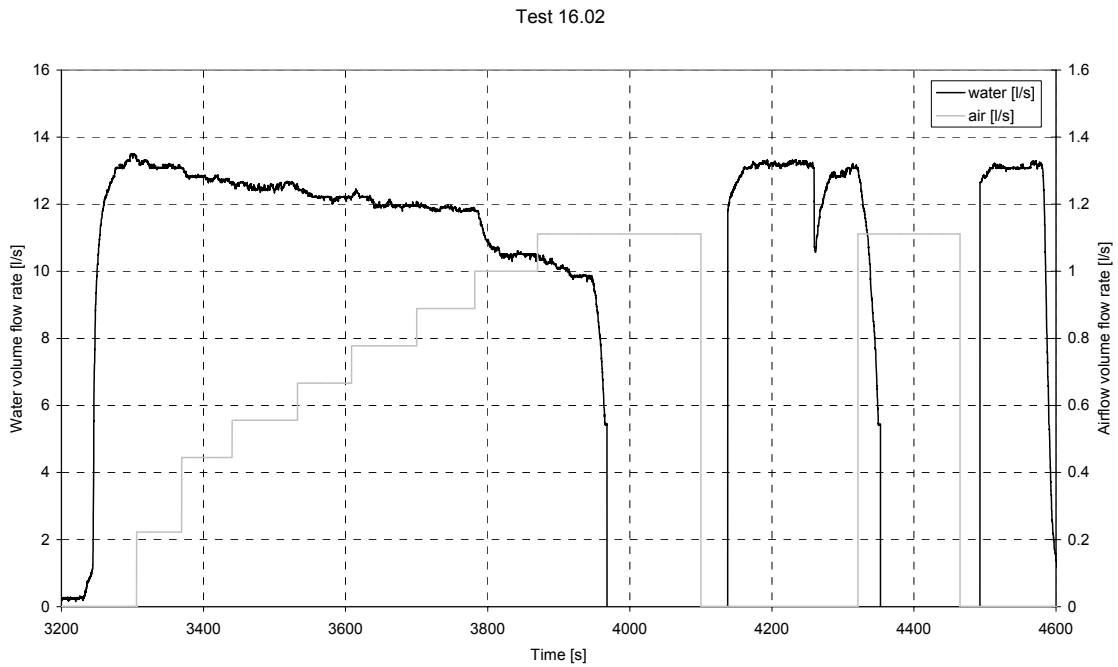

Figure 29. Volumetric flow rates of air and water during test 16.02.

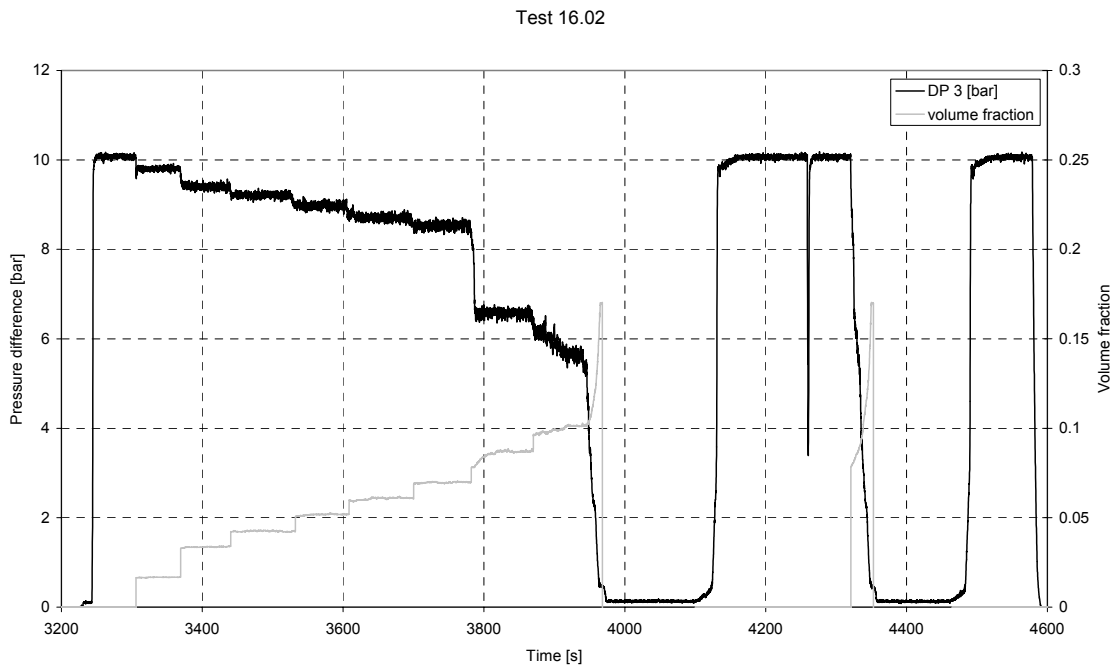

Figure 30. Pressure difference over the pump (DP3) and volume fraction during test 16.02.

3.4.4 Summary of the experiments with a pump and non-condensable gas

In the fourth stage, the performance of the ECCS pump was researched. The test pump simulated containment spray system 322 pump in Olkiluoto plant conditions (rated flow 75 kg/s at the nominal speed of 2970 rpm). The idea of the experiments was to find out how much air can be injected into the pump intake pipe before the pump stops working properly. In the experiments, the pump was running at the nominal speed of 2970 rpm with four different water flow rates (12.5, 25, 57 and 75 l/s) when compressed air was blown directly into the intake pipe. The flow rate of air was increased step by step until the water flow through the pump and the pump head collapsed. With volumetric flow rates 57 and 75 l/s the flow and the head stayed almost constant if air injection was less than 3-4%. When more air was injected the flow and the head collapsed considerably. In these cases the maximum possible airflow from the pneumatic system (7.5 l/s) was not enough to cause a total collapse of the pump flow and head. With flows 12.5 and 25 l/s the flow and the head started to decline after air injection was initiated. In both cases, the flow and the head collapsed totally when there was more than 7% air in the intake pipe. After the air injection was switched off, the head and the flow normalized quickly back to the original values with one exception. With the smallest flow rate (12.5 l/s), it took about 30 seconds for the pump head to normalize. Appendix 3 shows the volumetric flow rate of water and the pressure difference over the pump as a fuction of volume fraction.

4 SUMMARY

In a possible LOCA situation a large amount of non-condensable and condensable gas will be blown from the upper drywell to the condensation pool through the blowdown pipes in Olkiluoto 1 and 2 nuclear power plants. The behavior of air bubbles in the condensation pool and gas effect on the performance of the ECCS pump was studied experimentally with the condensation pool test facility.

When air was blown down to the pool the first airflow hit to the bottom of the pool (when the blowdown pipes were initially filled with water). The diameter of the first forming air bubble was approx. 1.5 m when the bottom of the bubble was on the level of the pipe outlets. The first bubble was so large that the upper part of the ECCS strainer was inside the bubble for a while. The next couple of bubbles forming at the pipe outlet touched the strainer, too. A lot of small air bubbles rose from the bottom of the pool as a result of the hit to the bottom. Also, the backflow of water near the pool walls carried a lot of smaller air bubbles from the surface to the lower part of the pool. For these two reasons, the level of the ECCS strainer was full of small air bubbles during the first 30 s. After 20 s, airflows rising upwards close to the pipes could be seen. Air bubbles were detected inside the pump intake pipe during the first 20 s, when the pump was sucking water through the ECCS strainer with a constant volumetric flow rate of 11 l/s (scaled to Olkiluoto plant conditions). The amount of air bubbles was, however, so small that the pump head and flow didn't decline during the blows. In the pump tests, a 3-4% fraction

of air was needed before the head and the flow declined considerably when water flows were 57 and 75 l/s. With smaller flows of 12.5 and 25 l/s, the head and the flow started to deline after air injection was initiated and the values collapsed totally when there was more than 7% air. With 12.5 l/s water flow rate, it took about 30 seconds before the head and flow reached the original values again after the air injection was switched off. With other flow rates (25-75 l/s), the head and flow normalized in a few seconds after the air injection was switched off.

5 REFERENCES

1. Eerikäinen, L., Pättikangas T.: Tutkimusselostus ENE6/13/01: Kaasun ja höyryn lauhdutusaltaaseen muodostamien kuplien vaikutus 323- ja 322-järjestelmiin ydinvoimalaitosyksiköillä Olkiluoto 1 ja 2. Luottamuksellinen. Espoo, 2001.

2. Sulzer Brothers Ltd: Sulzer Centrifugal Pump Handbook. Elsevier Science Publishers Ltd, 1989. pp. 73-75. ISBN 1-85166-422-4.

3. Data sheet for KSB CPKE 100-315 pump, KSB AG, 2001.

LTKK

APPENDIX 1. DESIGN DRAWINGS OF CONDENSATION POOL TEST FACILITY

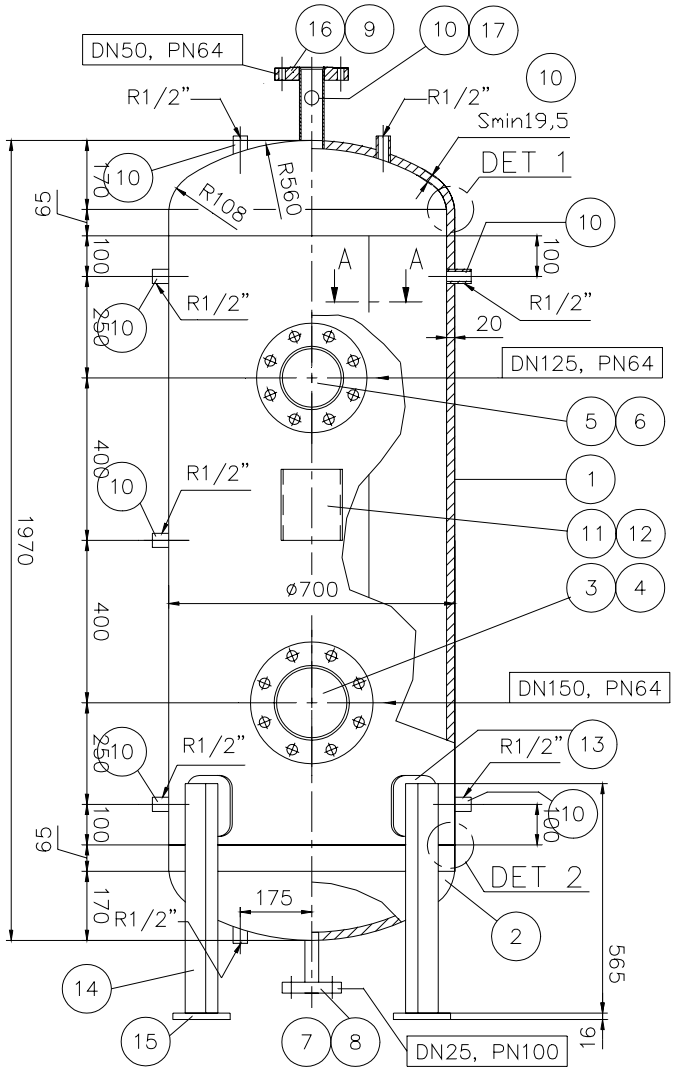

CONTENTS:	WATER+NITROGEN
CAPACITY:	0,6 m^3
HIGHEST OPERATION PRESSURE:	60 bar
HIGHEST OPERATION TEMPERATURE:	225°C
LOWEST OPERATION TEMPERATURE:	0°C
MATERIAL:	AISI 304/316

Osa	Piirustusnumero	Osan tai kokoonpanoryhmän nimitys	Standardi tai luettelo	Muoto, malli, mitat	Lajimerkki	Laatu	Kpl
17		Sleeve		R1/4"		AISI 304	1
16		Flange		PL30xD180		H II	1
15		Stand plate		16x120x80		Fe 360BFN	4
14		Stand		U-80x565		Fe 360BFN	4
13		Saddle plate		10x150x150		WNr1.4306	4
12		Registersingboard		1x100x150		AISI 316	1
11		Singboard shelve		8x175x310		SS2352-28	1
10		Sleeve	DIN2986	R1/2"		W4436	9
9		Pipe		D60,3x3,91x180		AISI 316L	1
8		Flange		PL30xD145		AISI 316L	1
7		Pipe		D33,7x3,25x150		AISI 316L	1
6		Pipe		139,7x3x65		SS2343-23	1
5		Flange		PL70xD300		H II	1
4		Pipe		168,3x4x70		WNr1.4571	1
3		Flange		PL90xD350/170		H II	1
2		Convex head	SMS482	25xD700 (min 19,5)		SA240	2
1		Casing		20x1500x2140		SS2333-28	1

Yleistoleranssit	Mittakaava 1:10	Tuote	Liittyy CONDENSATION POOL	Nimitys PRESSURE TANK 0.6 m^3
Piirt KR 05.05.99	LTKK/ENTE NUCLEAR SAFETY RESEARCH UNIT			Ent / Uusi
Suun HP				Piirustusnumero PA0094_A
Tark	Massa kg			Rev
Hyv				

LTKK

LTKK

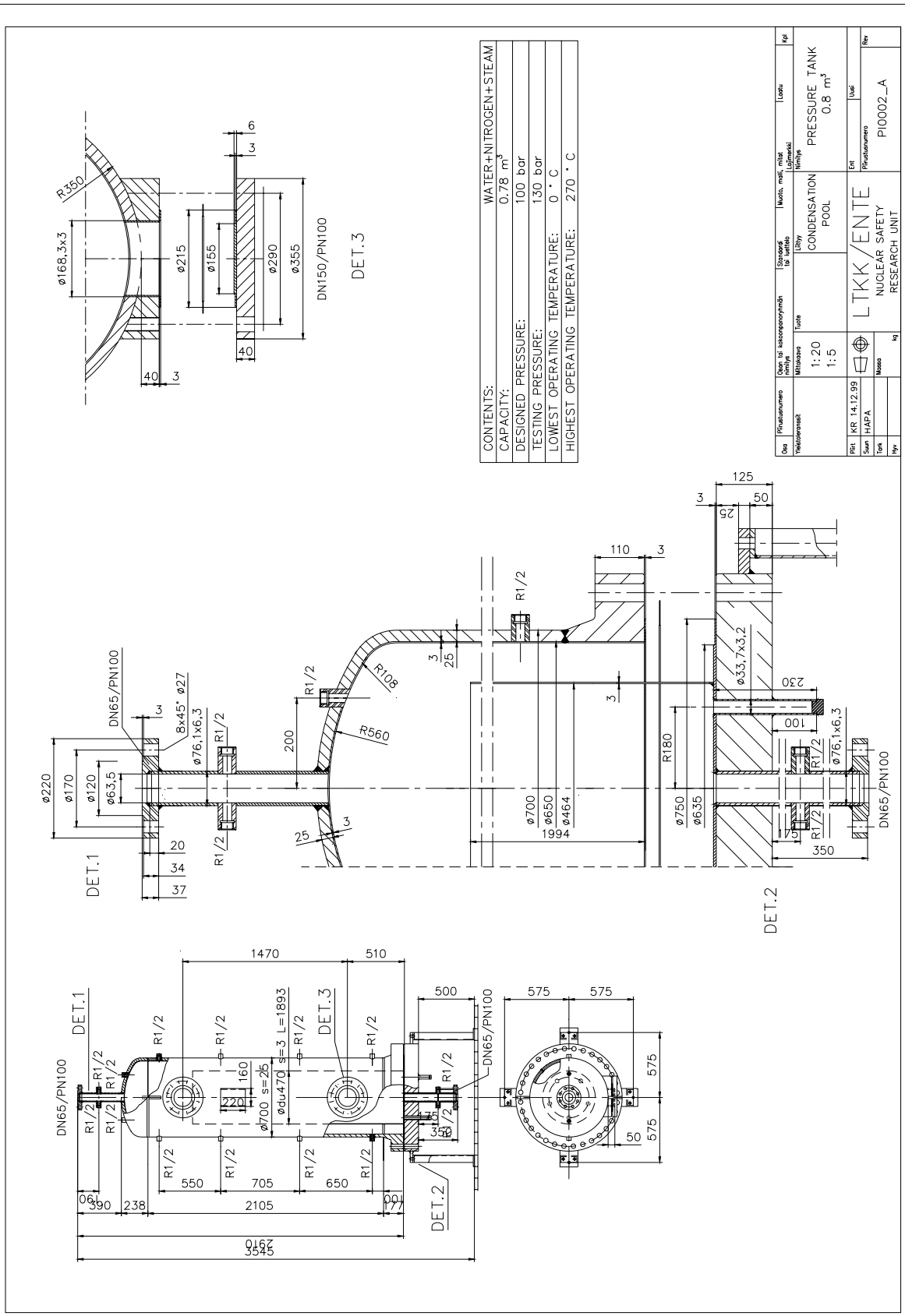
CONTENTS: WATER+NITROGEN+STEAM
CAPACITY: 0.78 m³
DESIGNED PRESSURE: 100 bar
TESTING PRESSURE: 130 bar
LOWEST OPERATING TEMPERATURE: 0 °C
HIGHEST OPERATING TEMPERATURE: 270 °C
PRESSURE TANK 0.8 m³
CONDENSATION POOL
LTKK/ENTE
NUCLEAR SAFETY RESEARCH UNIT
PI0002_A
DET.1
DET.2
DET.3
DN65/PN100
DN150/PN100
1:20
1:5
1994
3545
2105
2910

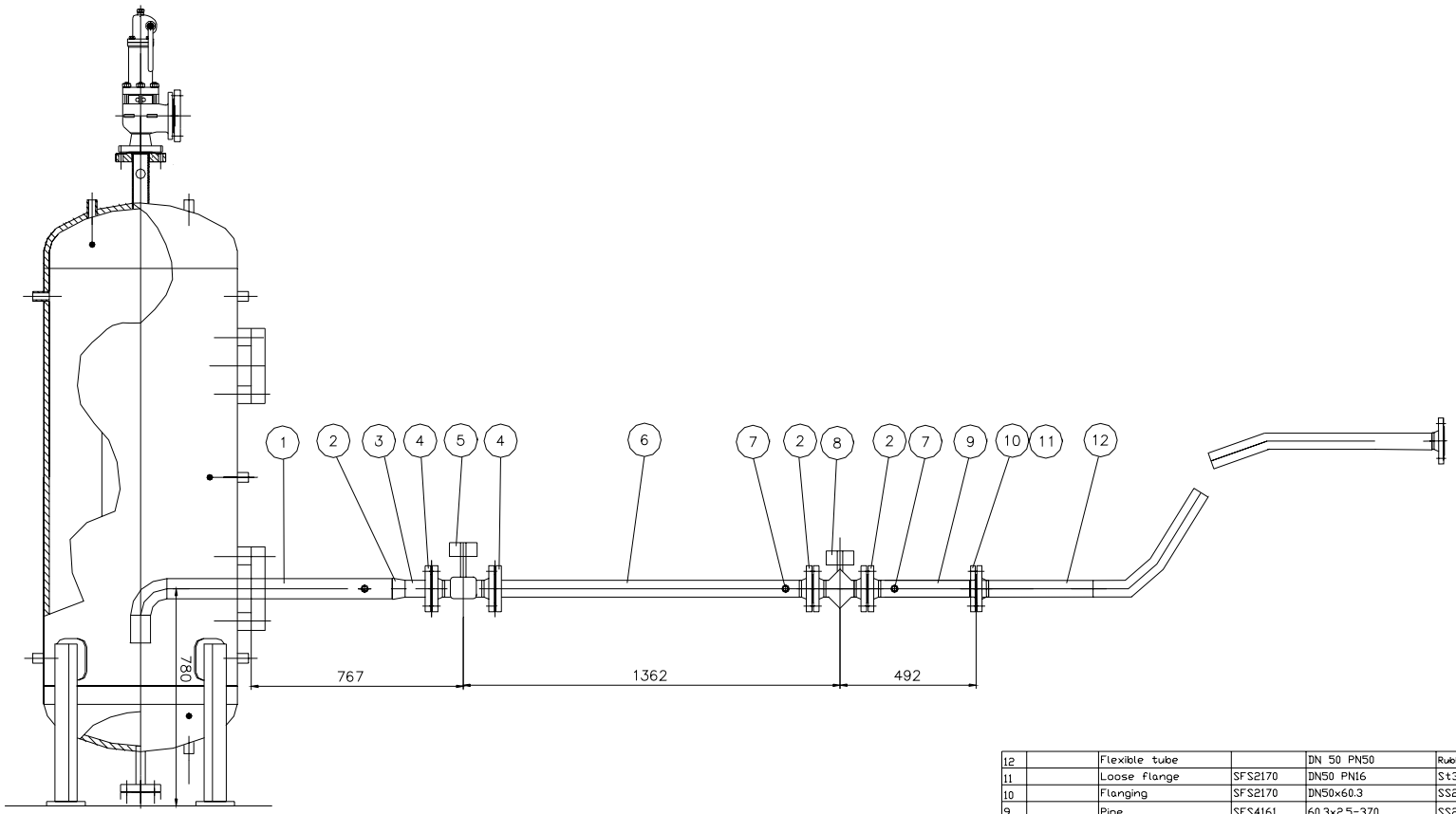

Osa	Piirustusnumero	Osan tai kokoonpanoryhmän nimitys	Standardi tai luettelo	Muoto, mitat lisämerkki	Laatu	Kpl
12		Flexible tube		DN 50 PN50	Rubber/steel	1
11		Loose flange	SFS2170	DN50 PN16	St35.8	1
10		Flanging	SFS2170	DN50x60.3	SS2343	1
9		Pipe	SFS4161	60.3x2.5-370	SS2343	1
8		Vortex flow meter		DN50 PN40	SS2343	1
7		Sleeve	ISO4145	Rp1/2	SS2343	4
6		Pipe	SFS4161	60.3x2.5-1150	SS2343	1
5		Valve		DN50 PN40	SS2343	1
4		Flange	SFS2156	DN50 PN40	SS2333	4
3		Pipe	SFS4161	60.3x2.5-95	SS2343	1
2		Cone	SFS4162	76.1/60.3x3	SS2343	1
1		Pipe	SFS3312	76.1x3.0-815	SS2343	1

Yleistoleranssit	Mittakaava 1:10 A2	Tuote	Liittyy CONDENSATION POOL	Nimitys BLOWDOWN LINE 1
Piirt 23.10.01 hapa	LTKK/ENTE NUCLEAR SAFETY RESEARCH UNIT		Ent	Uusi
Suun 23.10.01 hapa			Piirustusnumero putkilin_ja1.dwg	Rev
Tark	Massa kg			
Hyv				

LTKK

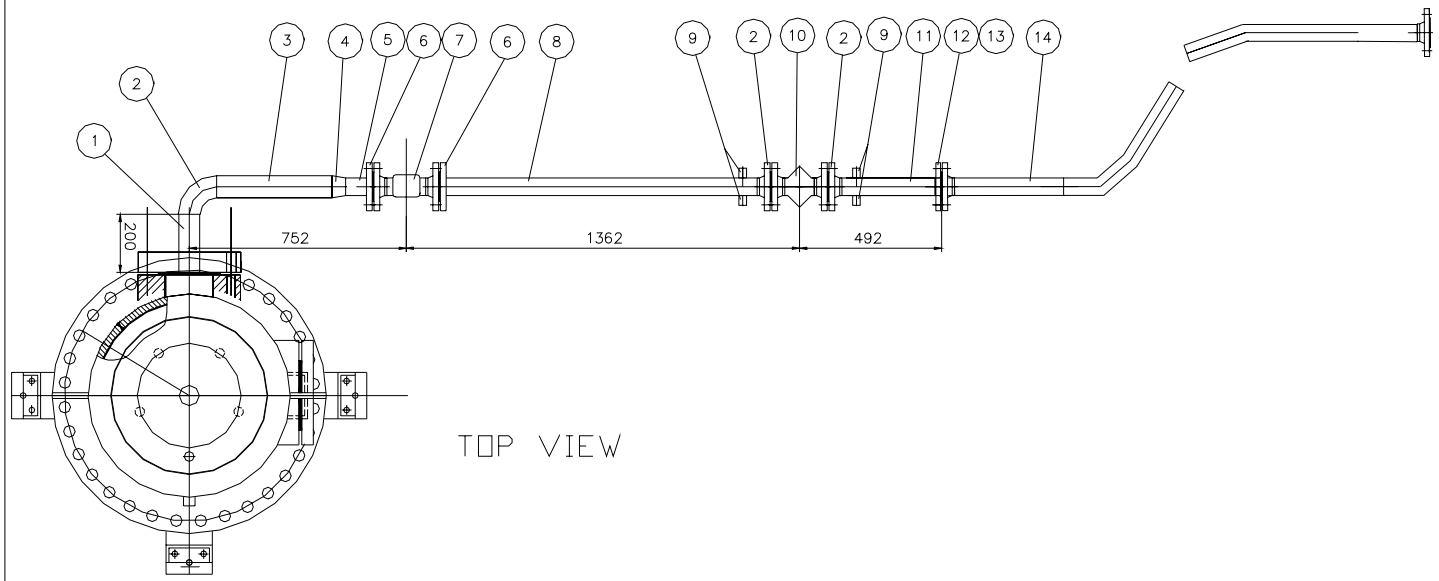

Osa	Piirustusnumero	Osan tai kokoonpanoryhmän nimitys	Standardi tai luettelo	Muoto, malli, mitat	Lajimerkki	Laatu	Kpl
14		Flexible tube		DN 50 PN50		Rubber/steel	1
13		Loose flange	SFS2170	DN50 PN16		St35.8	1
12		Flanging	SFS2170	DN50×60.3		SS2343	1
11		Pipe	SFS4161	60.3x2.5-390		SS2343	1
10		Vortex flow meter		DN50 PN40		SS2343	1
9		Sleeve	ISO4145	Rp1/2		SS2343	4
8		Pipe	SFS4161	60.3x2.5-1150		SS2343	1
7		Valve		DN50 PN40		SS2343	1
6		Flange	SFS2156	DN50 PN40		SS2333	4
5		Pipe	SFS4161	60.3x2.5-95		SS2343	1
4		Cone	SFS4162	76.1/60.3x3		SS2343	1
3		Pipe	SFS3312	76.1x3.0-400		SS2343	1
2		Curve	SFS4163	90/76.1x3.0		SS2343	1
1		Pipe	SFS3312	76.1x3.0-200		SS2343	1

Yleistoleranssit	Mittakaava 1:10 A2	Tuote	Liittyy CONDENSATION POOL	Nimitys BLOWDOWN LINE 2
Piirt 23.10.01 hapa				Ent / Uusi
Suun 23.10.01 hapa	Massa kg	LTKK/ENTE NUCLEAR SAFETY RESEARCH UNIT		Piirustusnumero putkilinja2.dwg / Rev
Tark				
Hyv				

LTKK

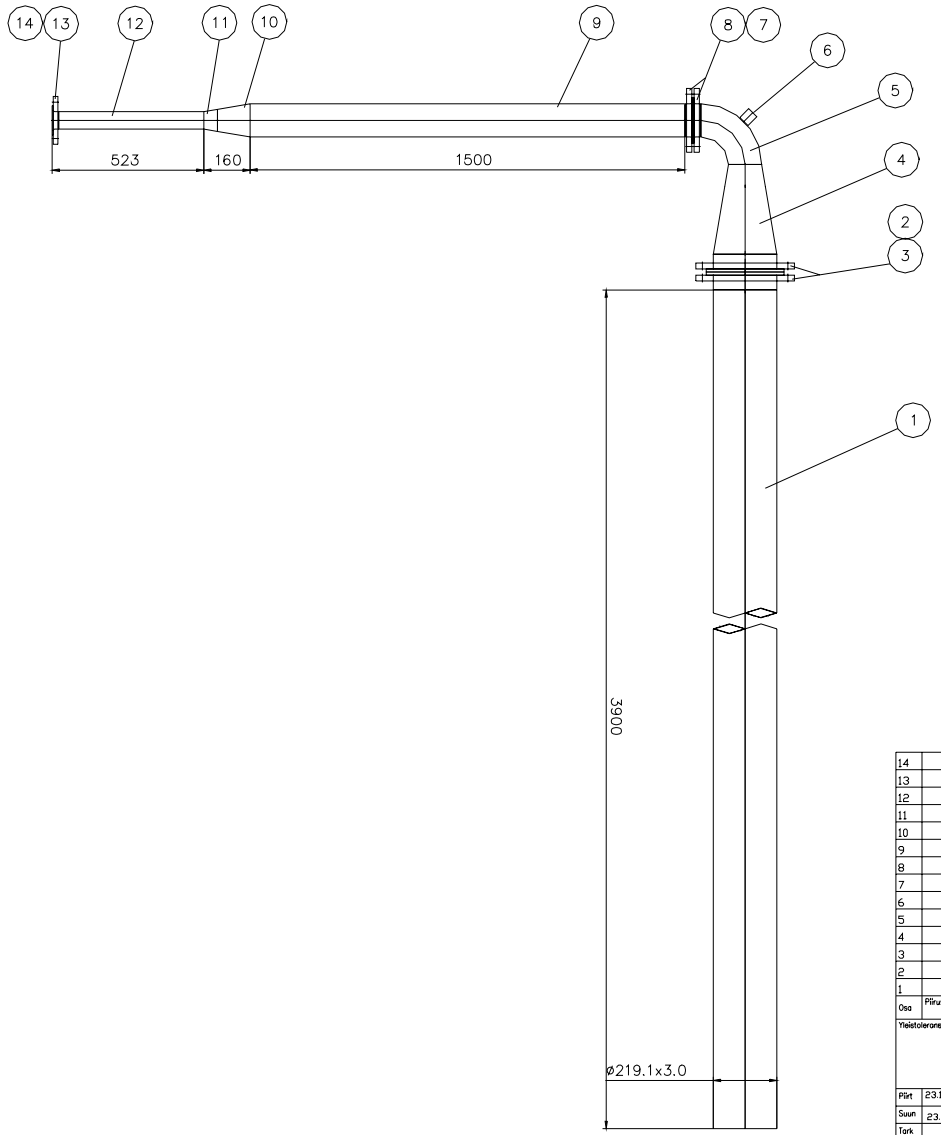

Osa	Piirustusnumero	Osan tai kokoonpanoryhmän nimitys	Standardi tai luettelo	Muoto, malli, mitat	Laatu	Kpl
14		Loose flange	SFS2170	DN50 PN16	St35.8	2
13		Flanging	SFS2170	DN50x60.3	SS2343	2
12		Pipe	SFS4161	60.3x2.5-500	SFS2343	2
11		Cone	SFS4162	76.1/60.3x3	SS2343	2
10		Cone	SFS4162	114.3/76.1x3	SS2343	2
9		Pipe	SFS4161	114.3x2.5-1500	SS2343	2
8		Loose flange	SFS2170	DN100x114.3	St35.8	4
7		Flanging	SFS2170	DN100x114.3	SS2343	4
6		Sleeve	ISO4145	Rp1	SS2343	2
5		Curve	SFS4163	90/114.3x3.0	SS2343	2
4		Cone	SFS4162	219.1/114.3x3	SS2343	2
3		Loose flange	SFS4171	DN200x219.1	St35.8	4
2		Flanging	SFS4168	DN200x219.1	SS2343	4
1		Pipe	SFS4161	219.1x3.0-3900	SS2333	2

Lajimerkki

Yleistoleranssit	Mittakaava 1:10 A2	Tuote	Liittyy CONDENSATION POOL	Nimitys DN200 BLOWDOWN PIPES
Piirt 23.10.01 hapa				Ent / Uusi
Suun 23.10.01 hapa	Massa kg	LTKK/ ENTE NUCLEAR SAFETY RESEARCH UNIT		Piirustusnumero puhalluseputki.dwg / Rev
Tark				
Hyv				

LTKK

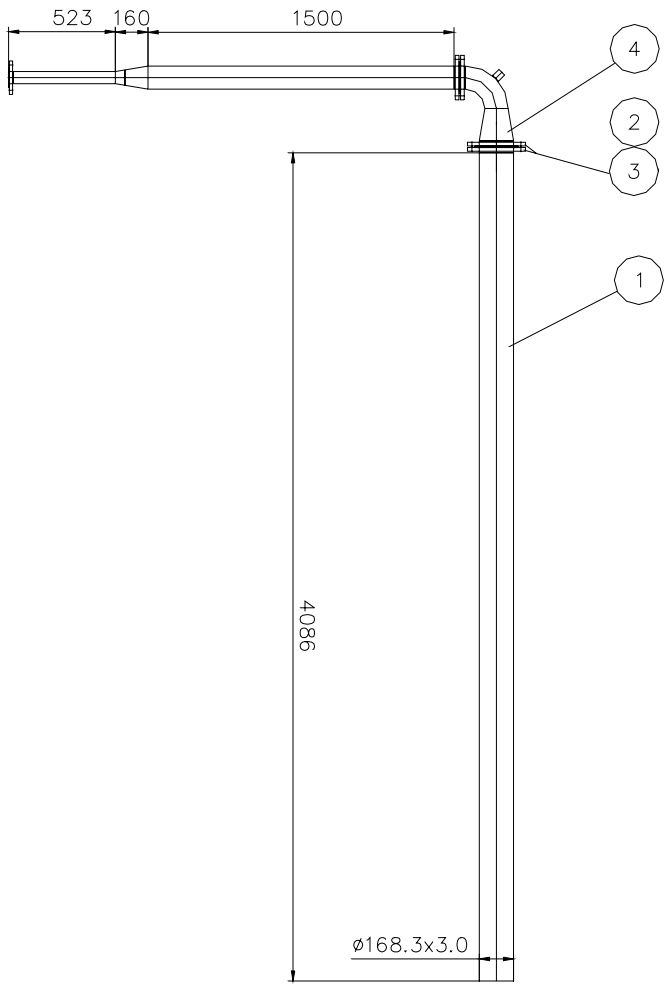

Osa	Piirustusnumero	Osan tai kokoonpanoryhmän nimitys	Standardi tai luettelo	Muoto, malli, mitat	Laatu	Kpl
4		Cone	SFS4162	168.3/114.3x3.0	SS2343	2
3		Pipe	SFS4161	168.3x3.0 L=4086	SS2333	2
2		Loose flange	SFS2170	DN150x168.3	S235JRG2	4
1		Flanging	SFS2170	DN150x168.3	SS2333	4

Lajimerkki

Yleistoleranssit	Mittakaava	Tuote	Liittyy	Nimitys
			CONDENSATION POOL	DN 150 BLOWDOWN PIPES

Piirt	8.1.02 hapa	LTKK/ENTE NUCLEAR SAFETY RESEARCH UNIT	Ent	Uusi
Suun	8.1.02 hapa		Piirustusnumero	Rev
Tark		Massa kg	DN150 PUTKI.dwg	
Hyv				

LTKK

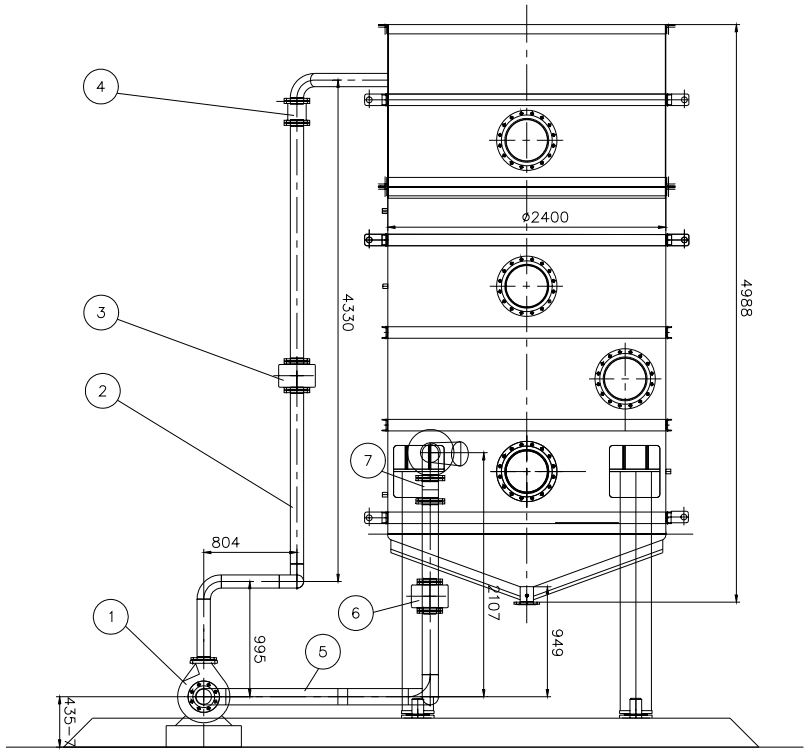

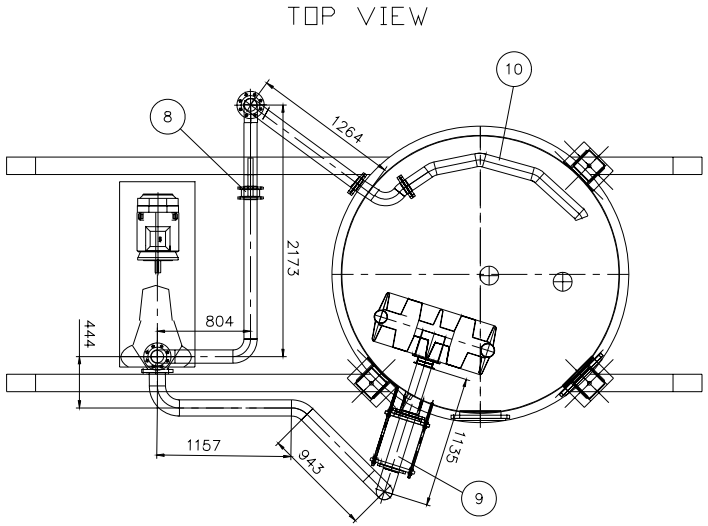

Osa	Piirustusnumero	Osan tai kokoonpanoryhmän nimitys	Standardi tai luettelo	Muoto, malli, mitat / Lajimerkki	Laatu	Kpl
10		Output piping				1
9		PMMA-pipe		130.0x5.0		1
8		Valve DN100 PN1				1
7		Expansion joint DN125				1
6		Ultrasonic flow meter				1
5		Intake piping	SFS3312	139.7x2.0	SS2343	1
4		Expansion joint DN100				1
3		Magnetic flow meter		DN100 PN16		1
2		Pressure piping	SFS4161	114.3x2.0	SS2333	1
1		Impeller pump		KSB CPKE 100-315		1

Yleistoleranssit	Mittakaava 1:10 A2	Tuote	Liittyy CONDENSATION POOL	Nimitys PIPING
Piirt 13.02.02 hapa				Ent / Uusi
Suun 13.02.02 hapa	Massa kg	LTKK/ ENTE NUCLEAR SAFETY RESEARCH UNIT		Piirustusnumero 1MUJAPAINEPUTKET.dwg / Rev
Tark				
Hyv				

LTKK

THE LOCATION OF THE BLOWDOWN PIPES
DURING THE EXPERIMENTS IN STAGE 1

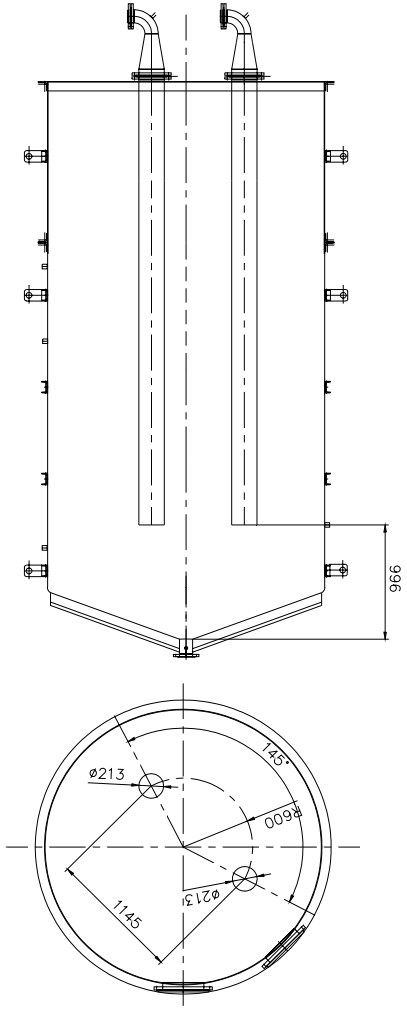

THE LOCATION OF THE BLOWDOWN PIPES AND THE STRAINER
DURING THE EXPERIMENTS IN STAGES 2 AND 3

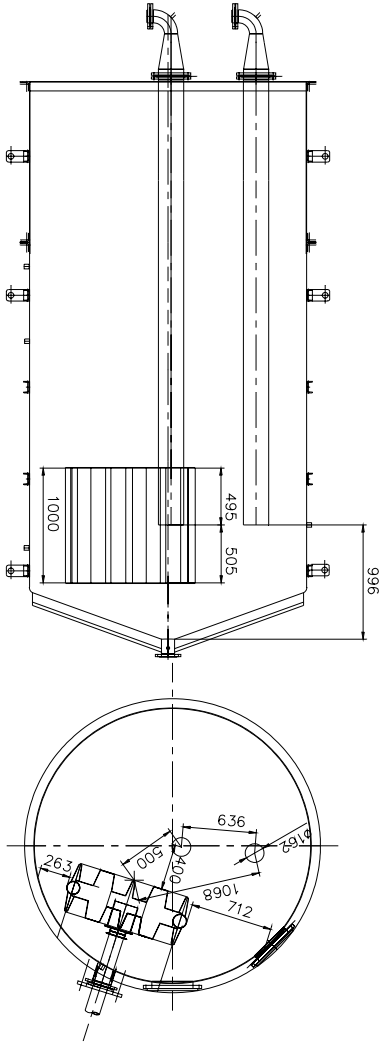

Osa	Piirustusnumero	Osan tai kokoonpanoryhmän nimitys	Standardi tai luettelo	Muoto, malli, mitat	Laatu	Kpl
Yleistoleranssit		Mittakaava 1:20 A2	Tuote	Liittyy CONDENSATION POOL	Lajimerkki	Nimitys The location of the blowdown pipes and the ECCS strainer
Piirt	22.01.02 hapa	LTKK/ENTE NUCLEAR SAFETY RESEARCH UNIT			Ent	Uusi
Suun	22.01.02 hapa				Piirustusnumero	Rev
Tark		Massa kg			inusihdinsijoitus.dwg	
Hyv						

LTKK

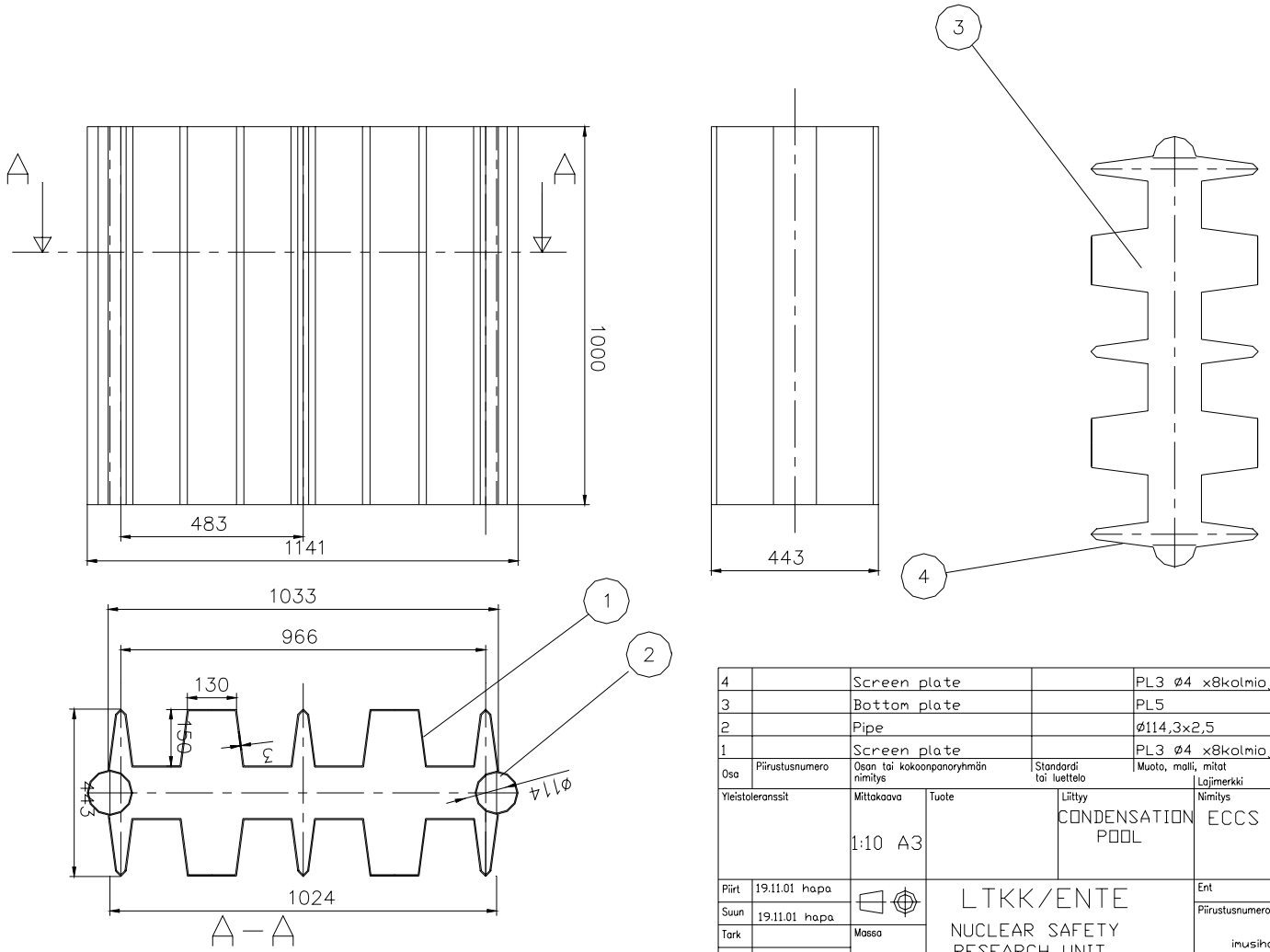

Osa	Piirustusnumero	Osan tai kokoonpanoryhmän nimitys	Standardi tai luettelo	Muoto, malli, mitat	Laatu	Kpl
4		Screen plate		PL3 Ø4 x8kolmioj	SS2333	4
3		Bottom plate		PL5	SS2333	2
2		Pipe		Ø114,3x2,5	SS2333	2
1		Screen plate		PL3 Ø4 x8kolmioj	SS2333	4

Yleistoleranssit	Mittakaava 1:10 A3	Tuote	Liittyy CONDENSATION POOL	Nimitys ECCS STRAINER
Piirt 19.11.01 hapa		LTKK/ENTE NUCLEAR SAFETY RESEARCH UNIT		Ent / Uusi
Suun 19.11.01 hapa				Piirustusnumero imusihdinrakenne.dwg / Rev
Tark	Massa kg			
Hyv				

LTKK

LTKK

APPENDIX 2. PERFORMANCE CURVES FOR PUMP MODEL CPK 100-315 /3/

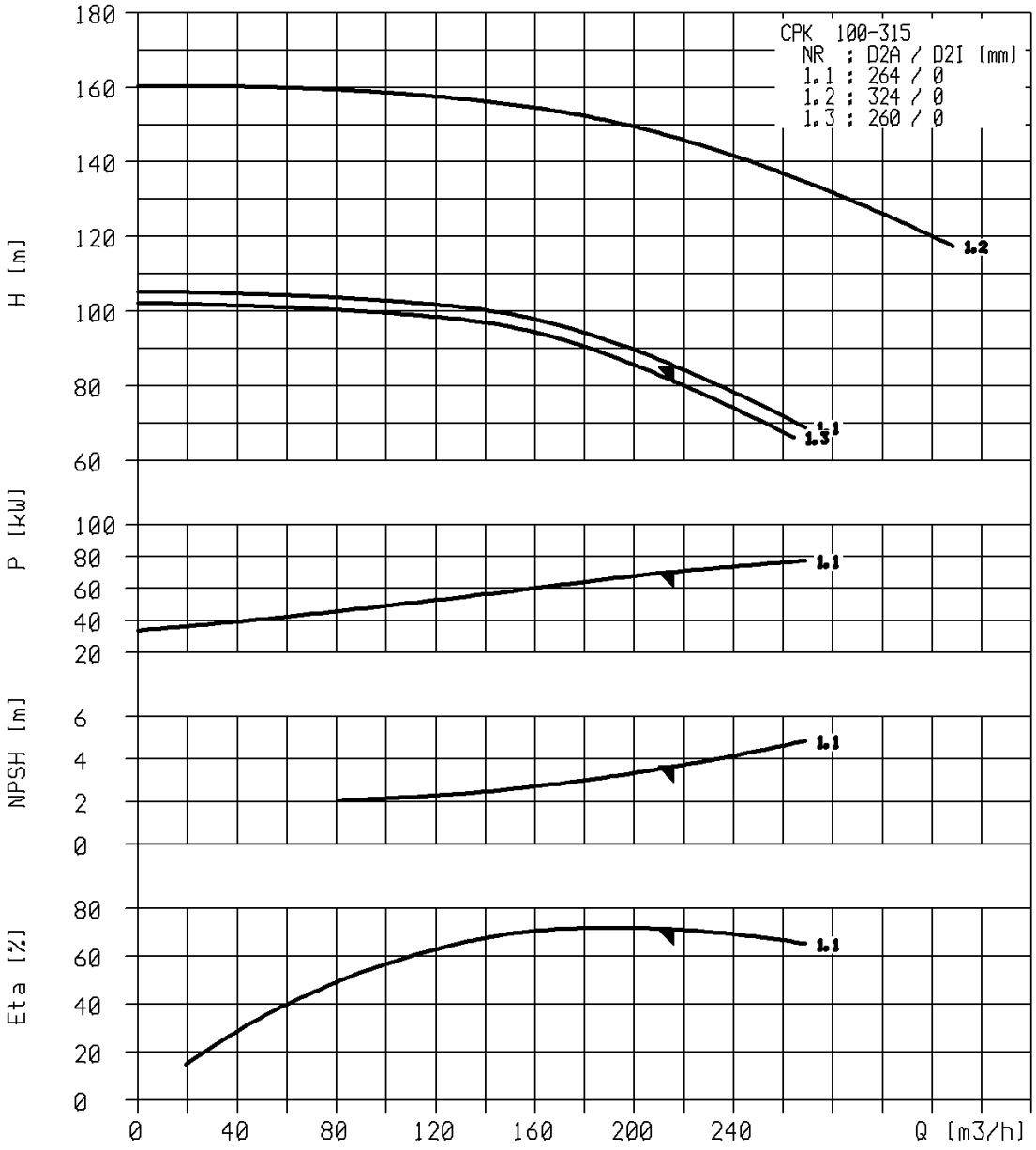

LTKK

APPENDIX 3. WATER VOLUMETRIC FLOW RATE AND PRESSURE DIFFERENCE OVER THE PUMP AS A FUNCTION OF VOLUME FRACTION.

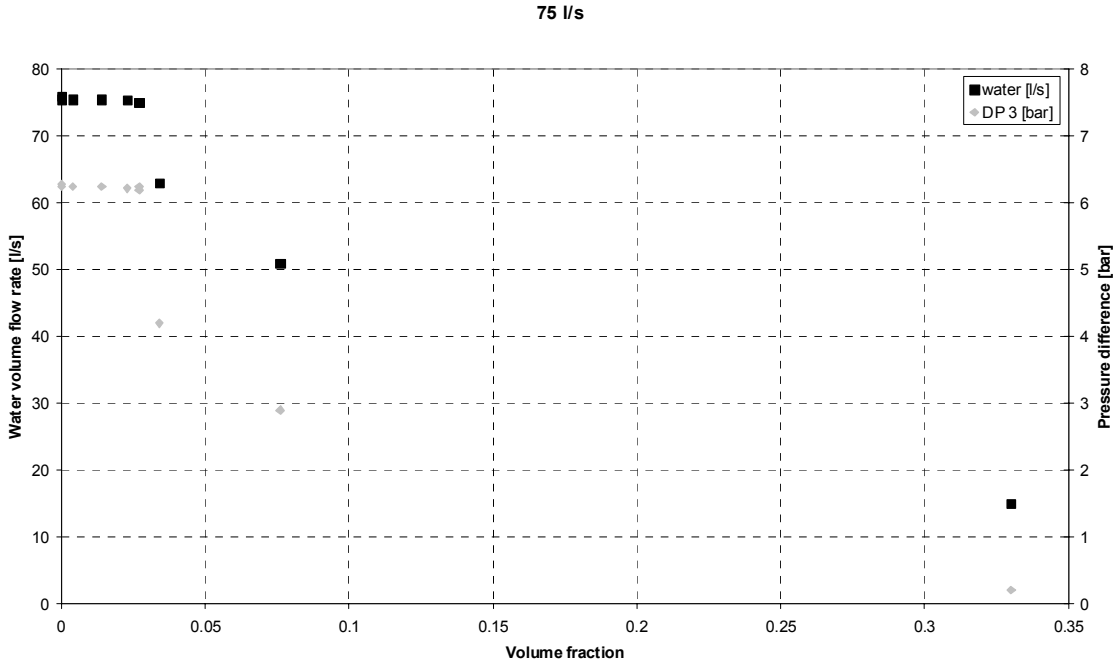

Water volumetric flow rate and pressure difference over the pump as a fuction of volume fraction with initial water volumetric flow rate of 75 l/s.

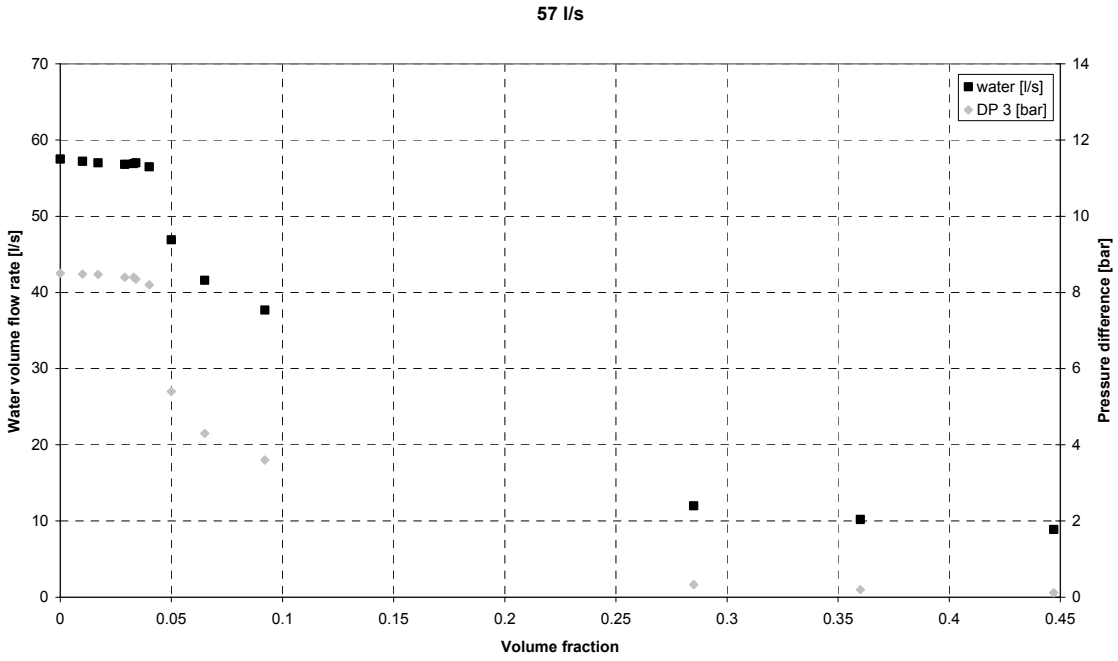

Water volumetric flow rate and pressure difference over the pump as a fuction of volume fraction with initial water volumetric flow rate of 57 l/s.

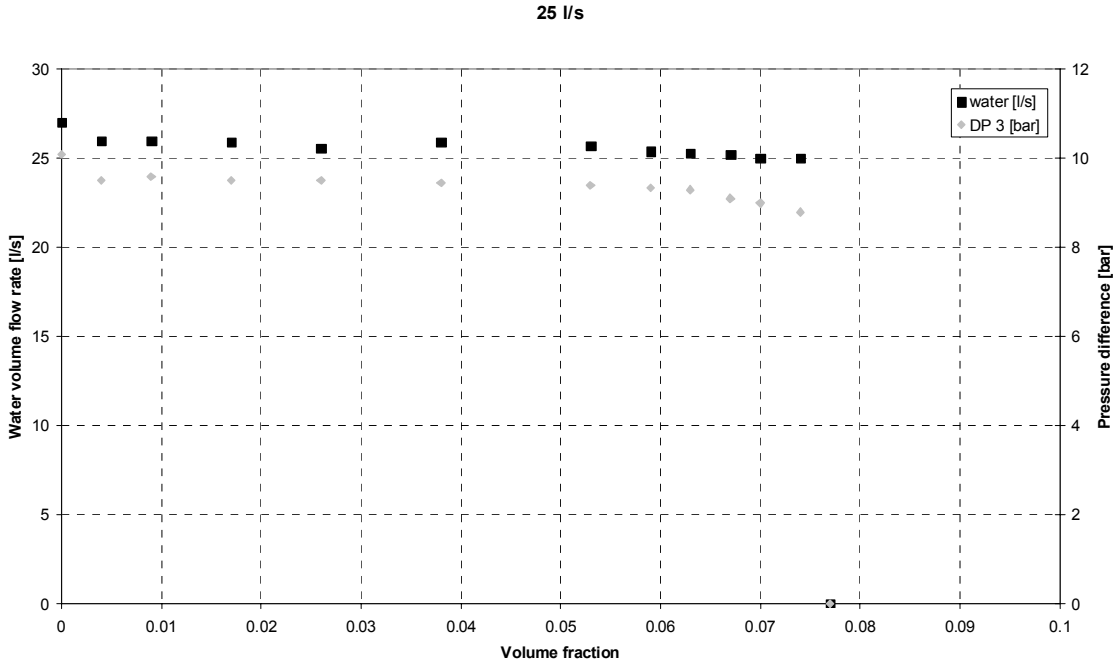

Water volumetric flow rate and pressure difference over the pump as a fuction of volume fraction with initial water volumetric flow rate of 25 l/s.

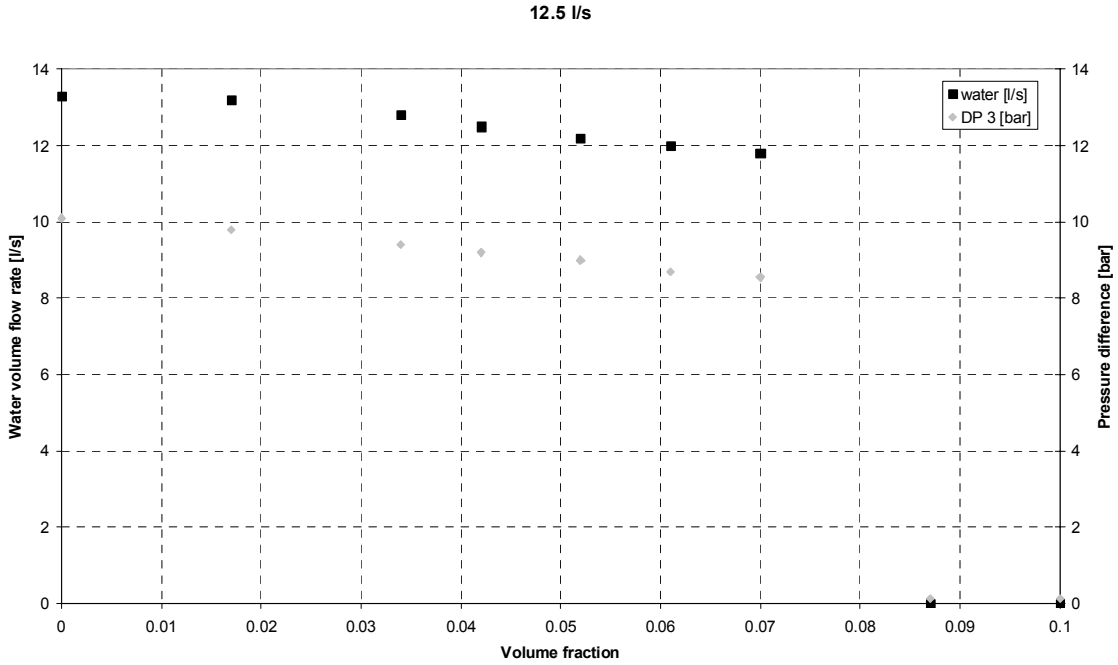

Water volumetric flow rate and pressure difference over the pump as a fuction of volume fraction with initial water volumetric flow rate of 12.5 l/s.