TRANSNUCLEAR
AN AREVA COMPANY

April 20, 2010
E-29128

U. S. Nuclear Regulatory Commission
Attn: Document Control Desk
One White Flint North
11555 Rockville Pike
Rockville, MD 20852

Subject: Revision 2 to Transnuclear, Inc. (TN) Application for Revision 3 to Certificate of Compliance No. 9302 for the Model No. NUHOMS®-MP197 Packaging – Response to Request for Additional Information (Docket No. 71-9302, TAC No. L24336)

Reference: Letter from Eric Benner (NRC) to Donald Shaw (TN), "Request for Additional Information for Review of the Model No. NUHOMS®-MP197 Packaging, Docket No. 71-9302," December 2, 2009

This submittal provides responses to the request for additional information (RAI) forwarded by the referenced letter. Enclosures 2 and 3 herein provide each of the NRC staff RAI followed by a TN response for non-proprietary items and proprietary items, respectively. Enclosures 5 and 7 provide changed safety analysis report (SAR) pages and drawings, for the proprietary and non-proprietary versions, respectively. In the SAR, changed pages are annotated as Revision 7, with changed areas indicated by italicized text and revision bars. Enclosure 36 provides a list of changed SAR pages and drawings with the reasons for changes indicated. Instructions for SAR page and drawing removal and insertion are provided in Enclosures 4 and 6, for the proprietary and non-proprietary versions, respectively.

In addition to changes related to the RAI, Enclosure 31 describes items which also caused changes to the SAR included in this submittal. Additional enclosures listed are referenced from within RAI responses.

This submittal includes proprietary information which may not be used for any purpose other than to support your staff's review of the application. In accordance with 10 CFR 2.390, I am providing an affidavit (Enclosure 1) specifically requesting that you withhold this proprietary information from public disclosure. This submittal also includes security-related information. Accordingly, public versions of TN SAR drawings and pages are provided in Enclosure 7, and public versions of certain TN calculations are provided in Enclosures 30, 37 and 38. Because Enclosure 9 consists of computer files that are entirely proprietary, public versions are not provided. Because Enclosures 10 and 11, 16 through 21, and 24 through 26, consist of entirely-proprietary information not owned by TN, public versions are not provided.

Should the NRC staff require additional information to support review of this application, please do not hesitate to contact Donis Shaw at 410-910-6878 or me at 410-910-6930.

Sincerely,

Jayant Bondre

Jayant Bondre, PhD
Vice President - Engineering

7135 Minstrel Way, Suite 300, Columbia, MD 21045
Phone: 410-910-6900 • Fax: 410-910-6902

NMSS01

NMSS

cc: Christopher Staab (NRC SFST), as follows:

- Six copies of this cover letter and Enclosures 1 through 5, 31 and 36
- One copy of Enclosures 8 through 29, and Enclosures 32 through 35

Enclosures:

1. Affidavit Pursuant to 10 CFR 2.390
2. RAIs and Responses (non-proprietary information)
3. RAIs and Responses (proprietary information)
4. Page and Drawing Change Instructions for the NUHOMS®-MP197 Safety Analysis Report Pages, Revision 7 (Proprietary version)
5. Replacement and New NUHOMS®-MP197 Safety Analysis Report Pages, Revision 7 (for the Proprietary version)
6. Page and Drawing Change Instructions for the NUHOMS®-MP197 Safety Analysis Report Pages, Revision 7 (Non-proprietary version)
7. Replacement and New NUHOMS®-MP197 Safety Analysis Report Pages, Revision 7 (for the Non-proprietary version)
8. Listing of Disk Numbering and Contents for Computer Files
9. Computer Files associated with RAI 3-21, 5-11, 5-20, and P6-1 (Proprietary), as follows:
   a. Part 1 of 3 - Structural Files on a portable hard drive
   b. Part 2 of 3 - Thermal Files on a portable hard drive
   c. Part 3 of 3 - Nuclear Files on DVDs
10. DI/RI-A-5-02, Rev. 1 e (original, in French) associated with RAI 2-12 (Proprietary)
11. DI/RI-A-5-02, Rev. 1 e (unofficial English translation) associated with RAI 2-12 (Proprietary)
12. Tietz, T. E., "Determination of the Mechanical Properties of a High Purity Lead and a 0.058 % Copper-Lead Alloy," WADC Technical Report 57-695, ASTIA Document No. 151165, Stanford Research Institute, Menlo Park, CA, April, 1958, associated with RAIs 2-14 and 2-24
13. Cover Page and Pages 56 and 66 from NUREG/CR-0481, associated with RAI 2-14
14. Cover Page and Page 3-110 from "Handbook of Heat Transfer Fundamentals," Second Edition, Warren M. Rohsenhow, James P. Hartnett, Ejup N. Ganic, McGraw-Hill Book Company, associated with RAI 2-14
15. Blandford, Robert K. and Spencer D. Snow, "Impact Testing of Stainless Steel Material at Cold Temperatures," 2008 ASME Pressure Vessels and Piping Division Conference, Chicago, Illinois (PVP2008-61215), associated with RAI 2-26
16. Pole de Plasturgie de l'Est Test Report, "Tests and Characterization of Aluminum Hydroxide-Based Vinylester Materials", November 1999 (original, in French), associated with RAIs 5-4, 5-5, 5-6, and 8-2 (Proprietary)
17. Pole de Plasturgie de l'Est Test Report, "Tests and Characterization of Aluminum Hydroxide-Based Vinylester Materials", November 1999 (unofficial English translation), associated with RAIs 5-4, 5-5, 5-6, and 8-2 (Proprietary)
18. Pole de Plasturgie de l'Est Test Report, "Characterization of Formulations VYAL A – VYAL B – VYMA 2", June 2001 (original, in French), associated with RAIs 5-4, 5-5, 5-6, and 8-2 (Proprietary)
19. Pole de Plasturgie de l'Est Test Report, "Characterization of Formulations VYAL A – VYAL B – VYMA 2", June 2001 (unofficial English translation), associated with RAIs 5-4, 5-5, 5-6, and 8-2 (Proprietary)

20. SERAM Test Report, "Ageing study of polymer materials for neutron shielding (VYAL B and VYMA 2)", November 2001 (original, in French), associated with RAIs 5-4, 5-5, 5-6, and 8-2 (Proprietary)
21. SERAM Test Report, "Ageing study of polymer materials for neutron shielding (VYAL B and VYMA 2)", November 2001 (unofficial English translation), associated with RAIs 5-4, 5-5, 5-6, and 8-2 (Proprietary)
22. Transnuclear Calculation MP197HB-0503, Revision 1 associated with RAI 5-20 (Proprietary)
23. Cover page and Pages 4-35, 4-36 and 4-37 from Wood Handbook, "Wood as an Engineering Material," Forest Products Laboratory, General Technical Report, FPL-GTR-113, United States Department of Agriculture," 1999, associated with RAI 2-29
24. DI-DRI-A-1-7-04, Rev. 00 (original, in French) associated with RAI 2-29 (Proprietary)
25. DI-DRI-A-1-7-04, Rev. 00 (unofficial English translation) associated with RAI 2-29 (Proprietary)
26. Figure 3.2 and 3.3 from BLK 99-074, rev 2, and Pages 45 to 49 from BTF 01-221, rev 0, associated with RAI 2-16 (Proprietary)
27. B. ROQUE et al., "Experimental Validation of the Code System "DARWIN" for Spent Fuel Isotopic Predictions in Fuel Cycle Applications," Proceedings of the International Conference on the New Frontiers of Nuclear Technology, *PHYSOR 2002*, Seoul, Korea, October 2002, associated with RAI P6-7
28. B. ROQUE et al., "The French Post Irradiation Examination Database for the validation of depletion calculation tools," proceedings of the International Conference on Nuclear Criticality Safety, *ICNC-2003*, Tokai-mura, Japan, October 2003, associated with RAI P6-7
29. NRC Safety Evaluation Report, "Safety Evaluation of Topical Report BAW-10228P, *SCIENCE*," USNRC, October 26, 1999, TAC NO. MA4599, associated with RAI P6-7
30. Public Version of Enclosure 22, Transnuclear Calculation MP197HB-0503, Revision 1
31. Additional Items, Not Related to the RAI, Which Caused SAR Changes
32. Transnuclear Calculation MP197HB-0401, Revision 2 associated with RAI 3-21 (Proprietary)
33. Transnuclear Calculation MP197HB-0402, Revision 2 associated with RAI 3-21
34. Transnuclear Calculation MP197HB-0410, Revision 0 associated with RAI 3-21 (Proprietary)
35. A Survey of Strain-Rate Effects for Some Common Structural Materials Used in Radioactive Material Packaging and Transportation Systems, BMI-1954, associated with RAI 2-14
36. List of Changed SAR Pages and Drawings, with Indication of the Reasons for Changes
37. Public Version of Enclosure 32, Transnuclear Calculation MP197HB-0401, Revision 2
38. Public Version of Enclosure 34, Transnuclear Calculation MP197HB-0410, Revision 0

AFFIDAVIT PURSUANT TO 10 CFR 2.390

Transnuclear, Inc.)
State of Maryland) SS.
County of Howard)

I, Jayant Bondre, depose and say that I am a Vice President of Transnuclear, Inc., duly authorized to execute this affidavit, and have reviewed or caused to have reviewed the information which is identified as proprietary and referenced in the paragraph immediately below. I am submitting this affidavit in conformance with the provisions of 10 CFR 2.390 of the Commission's regulations for withholding this information.

The information for which proprietary treatment is sought is contained in various enclosures, as listed below:

Enclosure 3: Proprietary RAIs and Responses

Enclosure 5:

1) SAR drawings, as follows:
   - MP197HB-71-1001 Rev 1
   - MP197HB-71-1002 Rev 1
   - MP197HB-71-1003 Rev 1
   - MP197HB-71-1004 Rev 1
   - MP197HB-71-1005 Rev 1
   - MP197HB-71-1008 Rev 1
   - MP197HB-71-1009 Rev 1
   - NUH24PTH-71-1003 Rev 1
   - NUH32PTH TYPE 1-71-1001 Rev 1
   - NUH32PTH TYPE 1-71-1003 Rev 1
   - NUH32PTH TYPE 1-71-1004 Rev 1
   - NUH32PTH1-71-1003 Rev 1
   - NUH32PTH-71-1001 Rev 1
   - NUH32PTH-71-1002 Rev 1
   - NUH32PTH-71-1015 Rev 0
   - NUH37PTH-71-1001 Rev 1
   - NUH37PTH-71-1002 Rev 1
   - NUH37PTH-71-1003 Rev 1
   - NUH37PTH-71-1004 Rev 1
   - NUH37PTH-71-1011 Rev 1
   - NUH37PTH-71-1012 Rev 1
   - NUH37PTH-71-1015 Rev 0
   - NUH61BT-71-1001 Rev 1
   - NUH61BTH-71-1100 Rev 1
   - NUH61BTH-71-1102 Rev 1
   - NUH61BTH-71-1106 Rev 1
   - NUH69BTH-71-1001 Rev 1
   - NUH69BTH-71-1002 Rev 1
   - NUH69BTH-71-1003 Rev 1
   - NUH69BTH-71-1004 Rev 1
   - NUH69BTH-71-1011 Rev 1
   - NUH69BTH-71-1012 Rev 1

- NUH69BTH-71-1013 Rev 1
- NUH69BTH-71-1014 Rev 1
- NUH69BTH-71-1015 Rev 1
- NUHRWC-71-1001 Rev 0
- NUHRWC-71-1002 Rev 0
- NUHRWC-71-1003 Rev 0

2) SAR Appendix A.2.13.11
3) Portions of SAR Chapter A.3
4) Portions of SAR Chapter A.5
5) Portions of SAR Chapter A.6
6) Portions of SAR Appendix A.6.5.1
7) Portions of SAR Appendix A.6.5.2
8) Portions of SAR Appendix A.6.5.3
9) Portions of SAR Appendix A.6.5.4
10) Portions of SAR Appendix A.6.5.5
11) Portions of SAR Appendix A.6.5.6
12) Portions of SAR Appendix A.6.5.7
13) Portions of SAR Chapter A.7
14) Portions of SAR Chapter A.8

Enclosure 9 - Computer Files associated with RAI 3-21, 5-11, 5-20, and P6-1

Enclosure 10 - DI/RI-A-5-02, Rev. 1 e (original, in French) associated with RAI 2-12

Enclosure 11 - DI/RI-A-5-02, Rev. 1 e (unofficial English translation) associated with RAI 2-12

Enclosure 16 - Pole de Plasturgie de l'Est Test Report, "Tests and Characterization of Aluminum Hydroxide-Based Vinylester Materials", November 1999 (original, in French), associated with RAIs 5-4, 5-5, 5-6, and 8-2

Enclosure 17 - Pole de Plasturgie de l'Est Test Report, "Tests and Characterization of Aluminum Hydroxide-Based Vinylester Materials", November 1999 (unofficial English translation), associated with RAIs 5-4, 5-5, 5-6, and 8-2

Enclosure 18 - Pole de Plasturgie de l'Est Test Report, "Characterization of Formulations VYAL A – VYAL B – VYMA 2", June 2001 (original, in French), associated with RAIs 5-4, 5-5, 5-6, and 8-2

Enclosure 19 - Pole de Plasturgie de l'Est Test Report, "Characterization of Formulations VYAL A – VYAL B – VYMA 2", June 2001 (unofficial English translation), associated with RAIs 5-4, 5-5, 5-6, and 8-2

Enclosure 20 - SERAM Test Report, "Ageing study of polymer materials for neutron shielding (VYAL B and VYMA 2)", November 2001 (original, in French), associated with RAIs 5-4, 5-5, 5-6, and 8-2

Enclosure 21 - SERAM Test Report, "Ageing study of polymer materials for neutron shielding (VYAL B and VYMA 2)", November 2001 (unofficial English translation), associated with RAIs 5-4, 5-5, 5-6, and 8-2

Enclosure 22 - Transnuclear Calculation MP197HB-0503, Revision 1 associated with RAI 5-20

Enclosure 24 - DI-DRI-A-1-7-04, Rev. 00 (original, in French) associated with RAI 2-29

Enclosure 25 - DI-DRI-A-1-7-04, Rev. 00 (unofficial English translation) associated with RAI 2-29

Enclosure 26 - Figure 3.2 and 3.3 from BLK 99-074, rev 2, and Pages 45 to 49 from BTF 01-221, rev 0, associated with RAI 2-16

Enclosure 32 - Transnuclear Calculation MP197HB-0401, Revision 2 associated with RAI 3-21

Enclosure 34 - Transnuclear Calculation MP197HB-0410, Revision 0 associated with RAI 3-21

Those documents listed which are owned by Transnuclear, Inc. have been appropriately designated as proprietary.

I have personal knowledge of the criteria and procedures utilized by Transnuclear, Inc. in designating information as a proprietary trade secret, privileged or as confidential commercial or financial information.

Pursuant to the provisions of paragraph (b) (4) of Section 2.390 of the Commission's regulations, the following is furnished for consideration by the Commission in determining whether the information sought to be withheld from public disclosure, included in the above referenced documents, should be withheld.

1) The information sought to be withheld from public disclosure involves certain safety analysis report drawings, analyses, calculations, and computer files related to the design of the modified NUHOMS®-MP197 transport cask which are owned and have been held in confidence by Transnuclear, Inc., plus certain reports which were obtained under a proprietary agreement with others, and have been held in confidence by Transnuclear, Inc.

2) The information is of a type customarily held in confidence by Transnuclear, Inc. and not customarily disclosed to the public. Transnuclear, Inc. has a rational basis for determining the types of information customarily held in confidence by it.

3) The information is being transmitted to the Commission in confidence under the provisions of 10 CFR 2.390 with the understanding that it is to be received in confidence by the Commission.

4) The information, to the best of my knowledge and belief, is not available in public sources, and any disclosure to third parties has been made pursuant to regulatory provisions or proprietary agreements which provide for maintenance of the information in confidence.

5) Public disclosure of the information is likely to cause substantial harm to the competitive position of Transnuclear, Inc. and to other owners of the information because:

   a) A similar product is manufactured and sold by competitors of Transnuclear, Inc.

   b) Development of this information by Transnuclear, Inc. and other owners of the information required expenditure of considerable resources. To the best

of my knowledge and belief, a competitor would have to undergo similar expense in generating equivalent information.

c) In order to acquire such information, a competitor would also require considerable time and inconvenience related to the development of a design and analysis of a dry spent fuel transportation system.

d) The information required significant effort and expense to obtain the licensing approvals necessary for application of the information. Avoidance of this expense would decrease a competitor's cost in applying the information and marketing the product to which the information is applicable.

e) The information consists of certain safety analysis report drawings, analyses, calculations, and computer files, plus certain reports, related to the design and analysis of dry spent fuel storage and transportation systems, the application of which provide a competitive economic advantage. The availability of such information to competitors would enable them to modify their product to unfairly get a better competitive position with Transnuclear, Inc., take marketing or other actions to improve their product's position or impair the position of Transnuclear, Inc.'s product, while avoiding the expense of developing similar data and analyses in support of their processes, methods or apparatus.

f) In pricing Transnuclear, Inc.'s products and services, significant research, development, engineering, analytical, licensing, quality assurance and other costs and expenses must be included. The ability of Transnuclear, Inc.'s competitors to utilize such information without similar expenditure of resources may enable them to sell at prices reflecting significantly lower costs.

Further the deponent sayeth not.

Jayant Bondre
Vice President, Transnuclear, Inc.

Subscribed and sworn to me before this 20th day of April, 2010.

Notary Public

My Commission Expires: 3/26/2014.

NOTARY PUBLIC SEAL STATE OF MARYLAND
LEWIS A. PICCOLINO
Notary Public
Montgomery Co., MD
My Comm. Exps. March 26, 2014

General Information

1-1 Provide the NUHOMS-61BT heat load zoning configurations used to perform the thermal evaluation of this Dry Shielded Canister (DSC) type inside the NUHOMS-MP197 transportation package.

The Safety Analysis Report (SAR) provides heat load zoning configurations for all the DSC types allowed for transportation in the NUHOMS-MP197 package except the 61BT DSC.

This information is needed to determine compliance with 10 CFR 71 (71.71 and 71.73).

Response to 1-1

The NUHOMS®-61BT DSC has only a uniform heat load zoning configuration (HLZC). Therefore the HLZC for this DSC type was not reported in the SAR. The uniform heat load configuration for the NUHOMS®-61BT DSC is added to SAR Section A.1.4.7 for consistency.

Structural

2-1 Add the statement to all definitions of damaged fuel, "Any assembly that is in a physical condition where it can not meet initial structural assumptions used to determine if criticality, shielding, or thermal requirements are met under either normal or Hypothetical Accident Conditions (HAC) must be considered damaged."

The definition of damaged fuel, as related to transportation, should be unambiguous.

This information is needed to satisfy 10 CFR 71.55 (b)(1), 10 CFR 71.33(b)(3), or 10 CFR 71.55(e)(1).

Response to 2-1

The damaged fuel definition in this Transport SAR application is consistent with the Storage SAR. In response to NRC Request for Supplemental Information (RSI) questions associated with this application [1], the definition of damaged fuel was also revised to be consistent with the criticality, shielding, and thermal analyses. The definitions of damaged fuel for each DSC are listed in:

NUHOMS®-24PTH DSC – Table A.1.4.3-2
NUHOMS®-32PTH DSC – Table A.1.4.4-2
NUHOMS®-32PTH1 DSC – Table A.1.4.5-2
NUHOMS®-37PTH DSC – Table A.1.4.6-2
NUHOMS®-61BT DSC – Table A.1.4.7-1
NUHOMS®-61BTH DSC – Table A.1.4.8-2
NUHOMS®-69BTH DSC – Table A.1.4.9-1

The criticality, shielding, and thermal analyses assumed that the damaged fuel assemblies do

not retain their integrity under NCT and HAC loads; therefore the analyses are conservatively bounded by the current definition in the SAR.

Reference [1] Letter from Jayant Bondre (TN) to NRC Document Control Desk, "Revision 1 to Transnuclear, Inc. (TN) Application for Revision 3 to Certificate of Compliance No. 9302 for the Model No. NUHOMS®-MP197 Packaging – Response to Requests for Supplemental Information (Docket No. 71-9302, TAC No. L24336)," dated June 22, 2009

2-2 Explain, in SAR Section A1.4.6.3, how the top and bottom caps will be attached to the cells used to contain damaged fuel (drawing NUH69BTH-71-1015). Remove mention of the end caps assuring retrievability.

The end caps will not assure retrievability since the body of the basket itself, which is not retrievable, is designed to perform the function of a damaged fuel can. Retrievability is not a requirement of 10 CFR Part 71. The end caps need to be attached to the basket so they can serve their function of maintaining the fuel in a known volume for the purposes of criticality determination.

This information is needed to satisfy 10 CFR 71.55 (b)(1).

Response to 2-2

For all the baskets with damaged fuel end cap designs, the damaged fuel assemblies are located between the top and bottom end caps. The top and bottom end caps closely fit inside the basket fuel compartment so that their movement is limited to axial sliding within the fuel compartment. After the top shield plug is installed, these end caps are trapped between the DSC top shield plug and the DSC inner bottom plate and cannot slide out of the basket damaged fuel compartment. As an example, relative lengths of the basket compartment, DSC cavity, and the end caps are calculated as follows for the 69BTH DSC.

*As shown on drawing NUH69BTH-71-1001 (sheet 2 of 4), the length of the DSC internal cavity is **179.50 in**.*

As shown on drawing NUH69BTH-71-1011 (sheet 2 of 5), the length of the basket compartment is 164.00 in. For the basket containing damaged fuel, the damaged fuel basket compartment extends another 12 in. (as indicated on drawing NUH69BTH-71-1014, note 2A); therefore the total length of the basket compartment is 176.0 in.

*The loading sequence is to first install the bottom end cap (drawing NUH69BTH-71-1015, bottom end cap, side view, 2.0 in. fits inside the bottom of the fuel compartment), then load the fuel, then install the 6.00 in. top end cap (drawing NUH69BTH-71-1015, top end cap, Section C-C; the bottom 3.50 in. fits inside the top of the fuel compartment and the remaining 2.50 in. aligns and stays on top of the basket fuel compartment). Therefore, the total length of the damaged fuel compartment is **178.50** in. (including the protruding top end cap length of 2.50 in.).*

Based on this, neither top or bottom damaged fuel end caps need to be attached to the fuel compartment used to contain damaged fuel, since their respective lengths (2.00 in. and 3.50 in.)

*are greater than **179.50 – 178.50 = 1.00 in**, which does not allow them to slide out of the damaged fuel compartments.*

Text related to the end caps assuring retrievability is removed from the revised SAR pages.

2-3 Provide drawings for the top and bottom end caps for the damaged fuel basket slots for the 32PTH, 32PTH1, and 37PTH DSC(s).

The drawings were not provided in the SAR.

This information is needed to satisfy 10 CFR 71.33 and 71.35.

Response to 2-3

The following drawings for top and bottom end caps have been added to the SAR:

NUH32PTH-71-1015 Rev. 0 (32PTH DSC).
NUH32PTH1-71-1003 Rev.1 (32PTH1 DSC).
NUH37PTH-71-1015 Rev. 0 (37PTH DSC).

2-4 Replace SAR Section 8.1.7 with the neutron absorber acceptance testing section currently in proposed TransNuclear (TN) Standardized NUHOMS CoC 1004, Amendment 10. Include the acceptance testing by reference to the SAR in the CoC.

The staff does not agree that this section as currently written adequately describes the necessary acceptance testing for neutron absorbers. Replacement with the section from CoC 1004, Amendment 10, makes the acceptance testing requirements for all the DSCs for both storage and transportation consistent.

This information is needed to satisfy 10 CFR 71.33 (a)(5)(ii) and 71.35.

Response to 2-4

Based on discussions with the NRC Staff, SAR Section A.8.1.7 has been revised to include neutron absorber acceptance testing consistent with acceptance testing in Amendment 1 to CoC 1030, which is nearing NRC approval, rather than Amendment 10 of CoC 1004. Two changes are made to the CoC 1030 Amendment 1 information, as follows.

1 *In SAR Section A.8.1.7.2 the average size of the boron carbide particles for metal matrix composites (MMC) is changed to specify a maximum of 40 microns instead of a range of 10-40 microns. Providing a particle size lower limit provides an unnecessary requirement, as neutron attenuation improves and less streaming occurs with smaller and well distributed boron carbide particles.*

2 *The sentence, "The average size of the boron carbide particles in the finished product is approximately 50 microns after rolling," which would have appeared in the first*

paragraph of Section A.8.1.7.3., is not included, for the following reasons. The average boron carbide particle size for BORAL® was taken from AAR publications of 2004 and earlier. Ceradyne recently reported to TN that they could not guarantee this average particle size. Transnuclear's investigation indicates that the specification for the boron carbide sieve analysis has remained consistent throughout the period of ownership by Brooks and Perkins, AAR, and Ceradyne, and the B4C supplier (ESK) has remained the same. The particle size reported in 2004 and earlier may have been correct, but only under specific conditions after rolling, which cannot be generalized. Because the particle size was used in a descriptive fashion only, and because only 75% credit is being used for BORAL® in the criticality calculations, this line is removed from SAR Section A.8.1.7.3.

Section A.8.1.7 is also revised to account for DSCs that have been previously loaded under the requirements of 10 CFR 72 certificates of compliance.

2-5 Specify in the text and on the drawings, the codes under which the 37PTH and 69BTH canisters are constructed.

Codes are specified for the materials of construction, but nowhere in the SAR, either in the text or the drawings for these two new DSCs, are the codes governing the construction of the DSC specified. Alternative codes are listed in the SAR Section A.2.13.13.

This information is needed to meet the requirements of 10 CFR 71.33(a)(5), 10 CFR71.43(f), 10 CFR 71.47(a), 10 CFR 71.55(d)(4), and 10 CFR 71.55(e).

Response to 2-5

The required code of construction is added to each DSC appendix (Appendices A.1.4.1 through A.1.4.9A). The code criteria column provided on the SAR drawing parts list provides additional detail on the application of the specific codes.

2-6 Add to the SAR the following information on the Radioactive Waste Container (RWC): 1) drying, 2) basket (if any) materials and properties, welds and codes, 3) analysis of galvanic interactions/gas generation, and 4) container materials and properties, seals, welds and codes, and drawings.

The SAR proposes that a RWC be added, but other then stating the contents of this canister, does not specify any details of its construction. The SAR must include the information so the staff can evaluate the safety of this canister to transport its contents.

This information is needed to meet the requirements of 10 CFR 71.33 and 71.35.

Response to 2-6

The description given in SAR Section A.1.2.3.2 is largely replaced by SAR Appendix A.1.4.9A.

This new appendix contains a detailed description of the RWC and its contents, including materials and properties, and also addresses galvanic interaction/gas generation. SAR Appendix A.1.4.10.11 is added containing drawings detailing the RWC as well as the materials of construction. Procedures describing the operation of the MP197HB with the RWC as a payload have been added to SAR Chapter A.7 in Appendix A.7.7.10.

2-7 Show that the mechanical properties calculated using the Geelhood and Beyer correlations in SAR Section A2.13.11.1 apply to cladding with radial hydrides.

Most of the DSCs have either been approved for storage of high burnup fuel or are asking for approval to transport high burnup fuel. Therefore, since the cladding will have had to undergo a drying cycle, and most cladding, other than M5, has both hydrogen contents >200 wppm, with hoop stresses increased by the larger increase in fission gases at the high burnup, the presence of radial hydrides is expected.

This information is needed to meet the requirements of 10 CFR 71.55(b)(1).

Response to 2-7

This response is proprietary and is provided in Enclosure 3.

2-8 Provide justification that the data in Addendum 10 f, g, and h (Dealing with Cladding Behavior) are applicable to the conditions of the contents being transported.

Addendums 10 f, g, and h, deal with the behavior of the cladding. Addendum 10g "Fuel Integrity Project, Bend tests on as-irradiated fuel series 11, and 12" provide details of the sample characteristics, test apparatus to do 3 point bend tests, testing parameters and conditions, and results of the testing in the form of stress, displacement curves, and photos of the samples. Samples were fueled, had an approximate burnup of 50 GWd/MTU, Zircaloy-4 and -2 clad fuel rod segments. Tests were conducted at constant temperatures of 25°C and 500°C, and constant pressure.

The value of these tests is minimal since there are no hydrogen levels stated, no decreasing stress to simulate potential hydride reorientation, and no pre-, or post- test metallography to indicate the hydride structure. Testing was only on Zircaloy cladding.

Addendum 10 h provided many unidentified tables, and load deflection curves for the tests. There were also many plots of graphic deflection with no indication of how the curves were generated. The computer simulations are not an issue for the materials review.

Addendum 10 f presented the analysis of the data in the other two addendums in an attempt to develop fracture toughness of high burnup cladding. Results at 50 GWd/MTU from the current tests were compared to fracture toughness measurements at lower burnups obtained from the literature. A linear extrapolation, based on the strain energy density, a concept that the staff does not accept, was made to higher burnups.

Consequently the staff has significant concerns regarding the: 1) validity of a linear extrapolation, 2) data comparisons with no knowledge of the hydrogen levels of the current tests, and 3) applicability of results with no simulated drying affects.

This data is presented as proprietary but touches on a generic issue of high burnup fracture toughness. In order to approve this data for support of the fuel behavior, extensive review will be required of the addendums, and references made in the addendums that the applicant would have to supply.

Use of this data for rods that are already breached (any size) breach) when loaded requires answers to points 1, and 2 above. All three points must be resolved before the data can be applied to rods that may breach after the cask is dried.

In past applications information provided to justify a fracture toughness methodology has been rejected. In the TN TN-68 CoC licensing action the applicant was told that the staff does not accept the methodology and they should remove it from the application since it was not necessary. In the TN Standardized NUHOMS CoC 1004, Amendment 10, the margin between the calculated fracture toughness, and the measured fracture toughness was so great that the applicability of the data was not questioned further. The applicant has provided insufficient justification for the conclusions drawn.

This information is needed to meet the requirements of 10 CFR 71.33(b)(3), 10 CFR 71.55(e)(1), and 10 CFR 71.55(b)(1).

Response to 2-8

Addendums 10f, 10g, and 10h were used as references for damaged fuel cladding structural evaluations in SAR Appendix A.2.13.11, Section A.2.13.11.4 in SAR Revision 5.

The evaluation in Section A.2.13.11.4 was to show that "the fuel can be retrieved and handled by normal means" even after the transportation normal or accident conditions, which is not necessary or required under 10CFR Part 71.

In the response to the NRC Request for Supplemental Information (RSI) associated with this application [1], this section and associated references, tables, and figures were deleted. SAR Revision 6 changed pages to incorporate these deletions were included in the RSI response submittal [1].

TN has updated the criticality analysis of the damaged fuel using the most credible configuration of damaged fuel assemblies consistent with the damaged fuel condition of the package (Please see the response to RAI 6-5).

TN has also updated the shielding analysis, which assumes that there is a possibility of local relocation of broken fuel rod segments of the high burnup damaged fuel assembly (Please see the response to RAI 5-16).

TN has also updated the thermal analysis, which assumes that there is a possibility of local relocation of broken fuel rod segments of the high burnup damaged fuel assembly (described in

SAR Chapter A.3, Section A.3.6.9).

Reference [1] Letter from Jayant Bondre (TN) to NRC Document Control Desk, "Revision 1 to Transnuclear, Inc. (TN) Application for Revision 3 to Certificate of Compliance No. 9302 for the Model No. NUHOMS®-MP197 Packaging – Response to Requests for Supplemental Information (Docket No. 71-9302, TAC No. L24336)," dated June 22, 2009

2-9 Revise the SAR to ensure that for any DSC and contents that have spent an extended time in storage, the DSC and contents meet all the structural requirements of 10 CFR Part 71. The revision should include inspections to obtain data, or analysis to support that: 1) the mechanical and thermal properties of the components of the DSCs related to safety, and 2) contents, have not degraded during the storage period. Provide evidence that removal of the DSC from the storage overpack will not damage the DSC, and alter the design configuration assumed in the application.

All the mechanical and thermal properties of the materials of construction of the DSC used in this Part 71 analysis are for pristine materials. Many of the DSCs were constructed and loaded many years ago, and have been on a storage pad for a considerable number of years. The materials properties used for the evaluation of the safety systems and contents of the DSCs that have already been in storage service must be representative of the conditions at the time of transport, not at the time of the loading of the DSC. The application should present evidence to indicate that the thermal and mechanical properties of the DSCs, or contents have not degraded during storage and are still applicable to the transportation evaluation. The application should discuss the potential damage that may occur to the DSC during its removal from the storage overpack and procedures to identify such damage.

This information is needed to meet the requirements of 10 CFR 71.85.

Response to 2-9

During insertion and extraction of the DSC from storage in the HSM, the pressure on the hydraulic RAM is monitored to ensure that the DSC is not damaged. A requirement is added to the Operating Procedures in SAR Chapter A.7, Section A.7.1.3 for the DSCs that are already in dry storage under the requirements of 10CFR72 to verify that loading records are verified to ensure that the DSC is not damaged during the insertion or extraction process and if necessary appropriate evaluations are performed to verify the integrity of the DSC shell.

Removal of the DSC has been evaluated during its 10CFR72 licensing process. It was shown that DSC shell, basket and its contents remain within their analyzed conditions during the licensed storage period of 20 years. If the CoC for the storage system is extended for additional terms, then appropriate Time Limited Aging Analysis (TLAA) will be performed and appropriate aging management program will be incorporated in the storage license to assure that the storage system including the DSC, basket and its contents will be within the analyzed conditions.

A requirement is added to SAR Chapter A.7, Section A.7.1.3 to verify that if the storage license of a DSC is extended beyond the initial licensed term of 20 years, then appropriate TLAA is performed and aging management program is implemented to assure that the DSC, basket and its contents will be within the analyzed conditions. The TLAA should consider the effect of fatigue, radiation, depletion of neutron absorbing material, effect of environmental conditions including internal temperature and pressures. The aging management program should consider periodic in-service inspections of accessible canister surfaces to monitor for adverse indications along with radiation and contamination monitoring.

2-10 Explain how the densities and thermal conductivities are calculated in Table 20 in SAR Section A.3.2.1. What wood is referred to in this table? What is the direction for the thermal conductivity? Provide a reference for the wood data in SAR Tables A.2.13.12.5 and Table A.2.13.12-6.

The note says that the density is calculated from the thermal diffusivity but no values for the thermal diffusivity are given and are not in the referenced wood handbook. There are a lot of density-to-moisture content tables in the Wood Handbook. The applicant should consider using these tables in conjunction with some conservative assumptions to estimate the density of the woods at different temperatures. The thermal conductivity of wood is anisotropic, by a factor of 2:1. Unfortunately, the Wood Handbook does not specify the measured direction of the thermal conductivity. The maximum thermal conductivity for wood in the SAR does not bound redwood.

This information is needed to satisfy 10 CFR 71.55 (d)(1&2).

Response to 2-10

The maximum thermal conductivity of wood used for HAC evaluations considers the dependency on the grain direction and moisture content and is discussed in NUHOMS®-MP197 Transport Package, Main SAR Section 3.2 (Item 8, Page 3-7) and also noted in SAR Section A.3.2.1, Item 14.

As noted on Main SAR Page 3-7, the lowest wood conductivity of 0.275 Btu-in/hr-ft^2-°F (0.0019 Btu/hr-in-°F) measured perpendicular to wood grains in a wood with 0% moisture content and 0.08 specific gravity is selected to bound the wood conductivity for NCT and post-fire HAC. The wood conductivity parallel to the grain is 2.0 to 2.8 times greater than the value perpendicular to the grains. The highest conductivity perpendicular to wood grains with 30% moisture content and a specific gravity of 0.8 is 1.950 Btu-in/hr-ft^2-°F. Multiplying this value by 2.8 results in the greatest wood conductivity of 5.46 Btu-in/hr-ft^2-°F (0.0378 Btu/hr-in-°F). The maximum wood conductivity is used during the fire for HAC analysis.

The specified density of balsa in the MP197HB Cask impact limiters is in the range of 7-12 lb/ft^3 (0.004-0.007 lb/in^3) and that for the redwood is in the range of 18.7-27.5 lb/ft^3 (0.011-0.016 lb/in^3) and the moisture content for both balsa and redwood is in the range 6 to 10% as noted in SAR Drawing MP197HB-71-1008, listed in SAR Chapter A.1, Appendix A.1.4.10. The wood density values presented in SAR Chapter A.3, Section A.3.2.1, Item 14 generally are lower than the above values. Lower wood densities maximize the component peak temperatures for the

transient analysis and are therefore conservative.

To provide additional justification for the wood densities used in the thermal analysis, the density of wood is re-calculated using the correlations presented on Page 3-12 of [2.10-1]. The equations for calculating the wood density are as follows:

$$\rho = 62.4 * G_m \left(1 + \frac{M}{100}\right) \quad lb/ft^3$$

$$G_m = \frac{G_b}{1 - (0.265 * a * G_b)}$$

where:

G_m = Specific gravity based on volume at moisture content M
G_b = Basic specific gravity (based on green volume)
a = (30 - M)/30, where M < 30

Based on the values for basic specific gravity (G_b) listed in Table 4-3a and Table 4-5a of [2.10-1], the basic specific gravity (G_b) of Redwood is 0.34-0.38 and that of Balsa is 0.16, respectively. For conservatism, the lowest basic specific gravity (G_b) and the lowest allowed moisture content (M) of 6% are selected to determine the wood density. Substituting the G_b and M values in the above equations gives the density of redwood as 24.14 lb/ft^3 (0.014 lb/in^3), and that of Balsa as 10.91 lb/ft^3 (0.006 lb/in^3).

The wood density presented in the SAR Chapter A.3, Section A.3.2.1, Item 14 bounds the density of both the redwood and balsa for all the temperatures above 100 °F. Since the minimum temperature of wood is above 100 °F as shown in SAR Chapter A.3, Figure A.3-30, using the wood density values as presented in the SAR is conservative.

The thermal diffusivity of wood is added to SAR Chapter A.3, Section A.3.2.1, Item 14.

The properties listed in SAR Chapter A.2, Table A.2.13.12-5 originated from [2.10-1] and are adjusted to benchmark against the 1/3 scale impact limiter drop test results. Because of the high variance in wood properties, the procurement of wood will be controlled during fabrication to meet the values used in SAR Table A.2.13.12-5. The material properties for -20 °F in SAR Table A.2.13.12-6 are discussed in the response to RAI 2-29.

Reference for RAI 2-10

2.10-1 Department of Agriculture, Forest Service, Wood Handbook: Wood as an Engineering Material, March 1999.

2-11 Justify why the thermal conductivity table in Section A3.2.1 is only applicable to the 69BTH DCS and not the 37PTH DCS?

This information is needed to satisfy 10 CFR 71.55 (d)(1&2).

Response to 2-11

The property tables listed in SAR Chapter A.3, Section A.3.2.1 are itemized from 1 to 31. Each table is valid for all models and DSC types unless specifically noted in the table title. A note is added at the introduction of this SAR section, the texts are aligned on Pages A.3-9 and 10, and "in 69BTH DSC" is added to the table title on Page A.3-19 to avoid any misinterpretation.

2-12 Provide a copy of Reference No. 17, Report No. DI/RI-A-5-02, Rev. 1, 2006, on the neutron shielding resin.

The document is cited to support the acceptable temperature regime for use for the neutron shield material, and the thermal properties of the material in SAR Section A.3.2.1 Subsection 12.

This information is needed to satisfy 10 CFR 71.43(f), and 10CFR 71.47(a).

Response to 2-12

Two versions of the referenced document DI/RI-A-5-02, Rev. 1, are provided; the original, in French, as Enclosure 10, and an unofficial English translation, Enclosure 11.

2-13 Provide clearer acceptance criteria for the gamma shield acceptance test in the second paragraph of SAR Section A.8.1.6.1.

This is needed to determine the ability of the gamma shield to function properly, and satisfy 10 CFR 71.85.

Response to 2-13

The acceptance criteria for the gamma scan is based on results obtained from measuring the dose rate through a test block constructed to replicate the MP197HB cask through-wall configuration. The test block uses nominal thicknesses of the steel walls, and nominal less 5% thickness of the lead layer. The description of the acceptance criteria is clarified in SAR Chapter A.8, Section A.8.1.6.1.

2-14 Provide a reference (and copies of the relevant pages) for the mechanical properties of Pb in SAR table A.2-5, SAR Section A2.13.7.5, and SAR Table A.2.13.7-3, and both the thermal expansion coefficients and density as a function of temperature in the tables in SAR Section A.3.6.7.1.

The properties of Pb can vary widely depending on the purity of the Pb and the strain rate at which the data is obtained. No reference is provided for these values in the SAR.

This information is needed to satisfy 10 CFR 71.43 (f), and 10 CFR 71.47(a).

Response to 2-14

The static stress properties given in SAR Tables A.2-5 and A.2.13.7-3 are taken from Tietz, Reference 17 of SAR Section A.2.12. The pertinent pages (pp 14, 21, 26) are included as Enclosure 12. The dynamic stress properties given in SAR Tables A.2-5 and A.2.13.7-3 are developed from stress-strain data for strain rate 100 in/in/sec, provided in Reference 19 of SAR Section A.2.12. The pertinent pages are included as Enclosure 35.

The Young's modulus and coefficient of thermal expansion values are taken from NUREG/CR-0481, pages 56 and 66, provided in Enclosure 13. These references are added to SAR Section A.2.12. The bilinear kinematic material properties of lead described in SAR Section A.2.13.7.5 are developed from SAR Table A.2.13.7-3.

The thermal expansion values given in SAR Chapter A.3, Section A.3.6.7.1 are taken from NUREG/CR-0481, page 56, provided in Enclosure 13. The SAR is revised to include this reference. The density values are from Rohsenhow, Reference 24, as stated. Page 3-110 is provided as Enclosure 14.

2-15 Clarify the meaning of the column "H_2O volume fuel volume" in SAR Table A.6.5.2-2.

The column is not the fuel volume, the free volume of the rod, or the ratio. Take for example, the General Electric 8 x 8 GE5 fuel type. Since the cladding does not creep down, the free volume available for H_2O (plenum + gap) is 135.5 cubic-inches/assembly or 2.185 cubic-inches per each of the 62 rods. The fuel volume is ~19.76 cubic-inches per rod. None of these numbers or the ratio agrees with the 1.56 in the column in question.

This information is needed to satisfy 10 CFR 71.33(b)(3), 10 CFR 71.55(e)(1) and for criticality calculations.

Response to 2-15

The parameter "H_2O volume / Fuel Volume" in SAR Chapter A.6, Table A.6.5.2-2 is the water to fuel volume ratio for use in the criticality calculations. It is simply a ratio of the water to fuel cross-sectional area within a fuel pin cell. For the GE 8x8 GE 9 fuel, this parameter is calculated as follows:

Fuel Cross-Sectional Area $= \pi * 0.25 * 0.411^2$ *(fuel pellet OD)*
$= 0.13267\ in^2$
Water Cross-Sectional Area $= 0.640^2$ *(fuel pin pitch)* $- \pi * 0.25 * 0.483^2$ *(clad OD)*
$= 0.22637\ in^2$

The water to fuel volume ratio is 1.71.

This ratio is purely an input to determine the upper subcritical limit and is not related to actual fuel volume or the free volume of the rod.

2-16 Provide the reference pages that support the parameters stated for the ABB fuel in SAR Table A.6.5.2.2.

This information is needed to satisfy 10 CFR 71.33 (b)(3), 71.55(e)(1) and for criticality calculations.

Response to 2-16

The supporting documentation requested for the ABB fuel parameters listed in SAR Table A.6.5.2-2 is provided herein as Enclosure 26. Please note that this information is proprietary.

2-17 Revise the SAR to state a mechanical property and it's relevant temperature.

Most materials properties are temperature dependent. Throughout the document, for example in SAR Section A.2.13.12.3, subtitles B and C, but not exclusive to this section, modulus and yield are given but no relevant temperature is indicated.

This information is needed to meet the requirements of 10 CFR 71.33(a)(5), 71.43(f), 71.47(a), 71.55(d)(4), and 71.55(e).

Response to 2-17

Transnuclear has reviewed all the SAR sections regarding the material properties used in the structural evaluations. All temperatures are specified for the material properties used, except in Section A.2.13.12.3 and Section A.2.7.3. These two sections are modified to describe the relevant temperature at which the material properties are used.

2-18 Provide consistent properties and identification of materials of construction throughout the SAR.

SAR Section A.2.13.12.3, subtitle F, indicates the yield for the bolt steel SA-540 Grade B24 CL 1 as 75 ksi. On the other hand, Table A.2-4 indicates the bolts are SA-540 Grade B23 CL 1 with a yield of 150 ksi at room temperature. SAR Section A 2.13.12.5, subtitle H, once again indicates the bolts are Grade B23 CL 1 but indicates in this instance a yield of 75 ksi.

SAR Section	Material	Yield, ksi
A.2.13.12.3	SA-540 Grade B24 CL 1	75
Table A.2-4	SA-540 Grade B23 CL 1	150
A 2.13.12.5	SA-540 Grade B23 CL 1	75
drawings	SA-540 Grade B23 CL 1	NA

This information is needed to meet the requirements of 10 CFR 71.33(a)(5), 71.43(f),

71.47(a), 71.55(d)(4), and 71.55(e).

Response to 2-18

The mechanical properties for SA-540 Grade B24 CL 1 and SA-540 Grade B23 CL 1 materials are identical and their yield stress is 150 ksi, as indicated in SAR Table A.2-4. The bolt material for the 1/3 scale impact limiter benchmark analyses described in SAR Section A.2.13.12.3 is specified as SA-540 Grade B24 CL 1, to be consistent with the 1/3 scale drop test and benchmark analysis for the MP197 as described in the main SAR text. The bolt material for the MP197HB Cask is specified as SA-540 Grade B23 CL 1, as shown in the SAR Chapter A.1, Appendix A.1.4.10 drawings for the MP197HB Cask. The analyses presented in revised SAR Appendix A.2.13.12 use the yield stress value of 150 ksi and the material specification described above. A footnote is added to SAR Table A.2-4 to clarify the bolt material specification.

2-19 Reduce the maximum allowable assembly burnup for the 69BHT canister to 62.5 GWd/MTU in Table A1.4.9-4, or provide justifications for the use of the temperatures in ISG-11, Revision 3. "Cladding Considerations for Transportation and Storage of Spent Fuel,"

The maximum assembly burnup allowable, if the temperature limits delineated in ISG-11, Revision 3, are invoked is 62.5 GWd/MTU. Table A.1.2.9-4 lists burnups as high as 70 GWd/MTU.

This information is needed to meet the requirements of 10 CFR 71.55(d)(1&2).

Response to 2-19

The maximum fuel assembly burnup where the cladding temperature limits from ISG-11 Revision 3 are derived is 62.5 GWD/MTU. The requested assembly average burnup for the 69BTH DSC is 70 GWD/MTU.

The fuel assemblies with burnups greater than 62.5 GWD/MTU require longer cooling times such that their heat load and/or the radiation source terms are lower. The thermal analysis documented in SAR Chapter A.3 demonstrates that the maximum cladding temperature is below the ISG-11 Revision 3 limit by 90 °F. The effect of burnup on the properties of fuel cladding is mainly as a result of fast neutron fluence during reactor operations. Higher burnups are achieved by improved thermalization of the neutrons and minimizing fast neutron fluence during reactor operations. This involves higher enrichments, improved fuel management and poison control (control rod movement / burnable absorber rods / soluble boron poison). Therefore, no significant change in the fast neutron fluence in the fuel cladding is expected when burnups are increased from 62.5 GWD/MTU to 70 GWD/MTU. Therefore, all the applicable thermal limits derived from ISG-11 Revision 3 are valid.

2-20 Show how the density change upon solidification of the lead pour is taken into account in calculating the shrinkage gap in the gamma shield.

The calculations in SAR Section A.3.6.7.1 appear to account for the thermal expansion after solidification and not the density change due to the phase change as the lead shield solidifies. Failure to take into account this effect would change the shrinkage gap and subsequently the volume available for lead slump during a hypothetical accident condition.

This information is needed to satisfy 10 CFR 71.35.

Response to 2-20

The lead pour and cooldown processes are tightly controlled to ensure that the lead cools from the bottom of the pour to the top at a controlled rate and that the advancing boundary of solidified lead is always covered with molten lead. The vertical standpipes above the lead cavity through which the molten lead flows are the last to cool, so that there is no gap left at the top of the lead cavity after the pour is finished. The volume between the inner and outer shells is thus completely filled with lead at the moment the lead solidifies. All subsequent calculations use solid lead properties at appropriate temperatures.

This procedure assures correct gap estimates for both thermal and slump evaluations.

SAR Chapter A.3, Section A.3.6.7.1 is revised to include a better explanation of the basis for the gap used in the thermal calculations.

2-21 Explain how the top and bottom caps are attached to the basket cells for NUHOMS 37PTH DSC and, the NUHOMS 69BTH. Provide the details of the configuration and structural analysis of these baskets.

As the basket itself is the damaged fuel canister, the end caps need to be attached to the basket. These DSCs, are not yet approved for storage. However, they are proposed to have failed fuel canisters to contain damaged fuel assemblies.

This information is needed to satisfy the 10 CFR 71.55.(b)(1).

Response to 2-21

The damaged fuel end caps are not attached to the basket, but rather are free to slide axially within their fuel compartments. The length of the end caps is sufficient to ensure positive engagement within the fuel compartment such that the contents of the fuel compartment remain isolated. This positive engagement is maintained regardless of basket location relative to the canister cavity as demonstrated below for the 37PTH DSC; for the 69BTH DSC this is described in the response to RAI 2-2.

For the 37PTH, the length of the DSC internal cavity is ***164.38 in.*** *for Option –S and* ***171.63 in.*** *for Option –M (ref. SAR Chapter A.1, Appendix A.1.4.10 Drawing NUH37PTH-71-1001, Sheet 2). The length of the fuel compartments is* ***162.00 in.*** *for Option –S and* ***169.00 in.*** *for Option –M (ref. SAR Drawing NUH37PTH-71-1011, Sheet 5). Therefore, the free axial space between*

*the internal cavity and fuel compartment is **2.38 in**. for Option –S and **2.63 in**. for Option –M. The end cap length is at least **6.00 in.** (ref. SAR Drawing NUH37PTH-71-1015) which is greater than the free axial space such that the end caps remain captured within their respective fuel compartments.*

As the top and bottom damaged fuel end caps are free to slide in the fuel compartments and are not attached to the basket, they are not part of the basket assembly and do not affect the basket analysis.

2-22 Provide the structural material, codes, analysis, etc., and details of construction of the Radioactive Waste Container (RWC).

The applicant has indicated that the RWC will be added to the list of authorized DSCs that will be shipped in MP197HB package under this amendment. RWC was not reviewed and approved by the staff in the past, therefore the adequacy needs to be verified to determine whether it will meet the requirements for the intended function.

This information is needed to satisfy the 10 CFR 71.33.

Response to 2-22

Additional information concerning the RWC is added to the SAR. Please see the response to RAI 2-6.

2-23 Provide defensible and substantiated justification(s), validated by more test data, for using linear extrapolation based on the strain energy density to determine fracture toughness of the cladding material for spent fuel burn-ups beyond the 50 GWd/MTU, up to 70 Gwd/MTU.

The current documentation (addendums 10 h, 10 f) provided for justification of fracture toughness of cladding material for high burn-up fuel is not adequate and applicable.

This information is needed to satisfy the 10 CFR 71. 33(b)(3), 71.55(b)(1), and 71.55(e)(1).

Response to 2-23

Please see the response to RAI 2-8.

2-24 Provide hard copies of the two technical papers shown as References 10, "Mechanical properties of High Purity Lead and a 0.058 Percent Copper-Lead Alloy," by T. E. Tietz; and Reference 11, "OUTCUR: An automated Evaluation of Two-dimensional Finite Element Stresses," shown on page A.2.13.1-27, of Appendix A.2.13.1, "MP197-HB Cask Body Structural Analysis."

This information is needed to satisfy the 10 CFR 71.3, and 71.35.

Response to 2-24

The referenced paper, "Mechanical Properties of a High Purity Lead and a 0.058 Percent Copper-Lead Alloy," by T.E. Tietz is included as Enclosure 12. The other referenced paper, ASME 76-WA/PVP-16, "OUTCUR: An Automated Evaluation of Two-dimensional Finite Element Stresses," cannot be included because of copyright restrictions. The paper is available from the Linda Hall Library Document Services Department (docserv2@lindahall.org).

2-25 Provide reference to the Storage CoC for NUHOMS 32PTH. Also describe NUHOMS Model 32PTH71, and the difference between 32PTH71 and 32PTH Type 1.

In Appendix A.1.4.8, Drawing No. NUH32PTH-71-1001, a general note indicates that information on that drawing applies to all NUH32PTH-71 canister drawings. Staff has no information that this canister was approved for storage. Table A.1.2 lists only NUHOMS PTH, and NUHOMS 32PTH Type 1 as within the scope of this Amendment.

This information is needed to satisfy the 10 CFR 71.33.

Response to 2-25

The reference for the storage CoC for the NUHOMS 32PTH is CoC No. 1030.

The NUHOMS® Model 32PTH71 does not exist; the application includes NUHOMS Models 32PT, 32PTH, 32PTH Type 1 and 32PTH1. All drawings in SAR Chapter A.1, Appendix A.1.4.10 are numbered "NUHXXX-71-YYY", where XXX is the reference of the NUHOMS® Model, for example 32PTH, and YYY is the drawing number, for example 1001.

The general note on drawing NUH32PTH-71-1001 indicating that information on that drawing applies to all NUH32PTH-71 canister drawings is changed to "APPLIES TO ALL 32PTH CANISTER DRAWINGS" to avoid confusion.

2-26 Provide copy of Reference No. 13 on page A.2.13-8.33.

The staff requests a hard copy of a technical paper titled, "Impact testing of Stainless Steel Material at Cold Temperatures," to verify the adequacy of the strain rate used for the HAC elastic-plastic analysis.

This information is needed to satisfy the 10 CFR 71.35.

Response to 2-26

The technical paper is enclosed as Enclosure 15.

2-27 Explain the fact that the actual stress under NCT exceeds the allowable stress for: wrap plates, fuel compartments, and canisters, as shown on Table A.2.133.8-12 on page A.2.13-8.43.

The staff needs detailed explanation why exceeding the allowable stress for these components will not jeopardize their structural integrity.

This information is needed to satisfy the 10 CFR 71.71.

Response to 2-27

The exceedance of the stresses are localized and have characteristics of secondary stresses. Therefore, limit analysis per NG-3228.2 is used to justify these high stresses. The explanation was provided in Section A.2.13.8.6.1.D and a note was provided at the bottom of Table 2.13.8-12 which states "Limit Load analysis is performed for these cases." To further clarify it the note is modified to state, "The exceedances for stresses are localized and have characteristics of secondary stresses. Limit analyses (NG-3228.2) are performed for these cases." Similar modifications are also made to SAR Tables A.2.13.8-5, A.2.13.8-6, A.2.13.8-16, A.2.13.8-21, A.2.13.8-22, A.2.13.8-29, and A.2.13.8-33.

2-28 Explain why the strain failure of 0.4 is considered high for redwood balsa as mentioned on page A.2.13.12-5.

Staff needs this to verify the adequacy of the Impact limiter under the HAC.

This information is needed to satisfy the 10 CFR 71.73.

Response to 2-28

All drop cases have been reanalyzed without setting a strain failure criteria of 0.4 for redwood. Also, elements are not eliminated in the revised solution. The revised results are presented in revised SAR Appendix A.2.13.12. In addition, the revised analyses use the Type 1-Constant Stress Solid Element formulation instead of the selective reduced integrated solid element formulation (Fully Integrated S/R Solid -Type 2 element). Hourglass controls are applied with the underintegrated solid elements used. Energy plots, including total, internal kinetic and hourglass are shown in SAR Figures A.2.13.12-57 through A.2.13.12-66. These plots show that the hourglass energy is small compared with the total energy.

2-29 Provide pertinent pages of the reference 3 on page A.2.13.12-27, for wood properties.

For the Impact Limiter, wood segment properties are increased by 20% per this reference. Provide an explanation that the information excerpted from this reference is applicable for this Amendment.

This information is needed to satisfy the 10 CFR 71.73.

Response to 2-29

Figure 4-14 from [1] shows the variation of wood properties with temperature using data from test samples having 0% and 12% moisture content. The moisture content specified for the MP197HB impact limiters is between 6 and 10%. Adjusting the values shown in Figure 4-14 from [1] for moisture content, the compressive strength at -20 °F is estimated to be approximately 20% higher than the compressive strength at 68 °F. The cover page and Pages 4-35, 4-36 and 4-37 from [1] are provided as Enclosure 23.

TN International has also performed crush tests of wood as shown in the attached proprietary reference [2]. The original French version of [2], and an unofficial English translation, are provided as Enclosures 24 and 25, respectively. The moisture content specified in these tests is between 5 and 10%, similar to the range specified for the MP197HB impact limiters. The plot of relative crush stress as a function of temperature shows that at -29 °C (-20 °F), the crush stress increases by a factor of approximately 1.2. This result is consistent with the 20% used in the MP197HB impact analyses.

References for RAI 2-29:

1. *Wood Handbook, "Wood as an Engineering Material," Forest Products Laboratory, General Technical Report, FPL-GTR-113, United States Department of Agriculture," 1999.*
2. *TN International, "Materials Data Sheet, Shock Absorbing Materials-Redwood", 1/19/2007.*

2-30 Provide justifications for the analysis of Fuel Rods under HAC presented in Appendix A.2.13.11. "MP197HB Evaluation of the Fuel Assemblies under Impact loads".

The applicant's analysis although, in some instance conservative, has yet not elaborated and demonstrated to the staff that the fuel rod buckling limits (in all cases ranging from low to medium to high burn-up fuel) satisfies the regulations. This is, in view of the fact that adequate and accurate test data used to substantiate the arguments presented in the SAR are still not fully endorsed and accepted by the staff.

This information is needed to satisfy the 10 CFR 71.73.

Response to 2-30

A single pin analytical model, developed by Pacific Northwest National Laboratory (PNNL) [1] and used in NUREG-1864 [2], "A Pilot Probabilistic Risk Assessment of a Dry Cask Storage System at a Nuclear Power Plant," was used to determine the strain ductility demand that a typical fuel pin may be subject to during a 30 ft HAC end drop.

The revised analyses is included in SAR Section A.2.13.11.3.

The methodology is identical to the analysis submitted to NRC for review as part of the RAI responses for the TN-40 Transport application [3].

Nine cases are analyzed to evaluate all realistic loadings and bounding fuel assemblies in the MP197HB package. Please see SAR Section A.2.13.11.3 for details of the analyses.

References for RAI 2-30:

1. *H. E. Adkins, Jr., B. J. Koeppel, and D. T. Tang, Spent Nuclear Fuel Structural Response when Subject to an End Impact Accident, PVP2004, San Diego, CA, July 25- 29 2004.*
2. *NUREG 1864, "A Pilot Probabilistic Risk Assessment of a Dry Cask Storage System at a Nuclear Power Plant," USNRC, March 2007.*
3. *Letter from Jayant Bondre (TN) to Document Control Desk (NRC), "Transnuclear, Inc. (TN) Application for the TN-40 Transportation Packaging for Spent Fuel, Revision 5, Docket No. 71-9313, TAC No. L24106," dated March 15, 2010.*

2-31 Provide corrected drop analyses with calculated energy (total, internal, hourglass, etc.) results. Visible hour-glassing occurs in the impact limiters (e.g., 1/3 slapdown LSDYNA analysis).

Selective-reduced integrated elements are not appropriate in the compression-driven drop events. Ensure energy (total, internal, hourglass, etc.) results are included in the revised SAR.

This information is required to assure compliance with 10 CFR 71.73(c)(1).

Response to 2-31

Please see the response to RAI 2-28.

2-32 Explain how setting a low strain erosion factor for the elements in the impact limiters for drop analyses is conservative.

The staff does not agree that this approach is conservative because, the disappearance of the elements and associated loss of rigidity in the structure implies an artificial softening in the impact limiter.

This information is required to assure compliance with 10 CFR 71.73(c)(1).

Response to 2-32

Please see the response to RAI 2-28.

2-33 Explain what is meant by "maximum" indication in dimensions on drawings as well as in

tables for DSCs (e.g., 24 PTH, 37 PTH, etc.).

This information is required to assure compliance with 10 CFR 71.33(a)(5)

Response to 2-33

The "maximum" indication in the dimensions, on drawings as well as on tables, only refers to the length of the canister at ambient temperature.

For consistency, SAR Chapter A.1, Appendix A.1.4.10 drawings NUH32PTH-71-1002, NUH61BTH-71-1100 and NUH69BTH-71-1001 are corrected to show the proper maximum canister length, as well as SAR Appendices A.1.4.1.1, A.1.4.7.1, A.1.4.9.1 and SAR Table A.1.4.2-1.

2-34 Explain inconsistency in length dimension for NUHOMS 61 BT, page. A.1.4.7-1. This dimension is listed as 199.7" versus 199.25" on the drawings.

This information is required to assure compliance with 10 CFR 71.33(a)(5)

Response to 2-34

The approximate 199.7" dimension previously given in SAR Chapter A.1, Appendix A.1.4.7 agrees with the dimensions provided on SAR Chapter A.1, Appendix A.1.4.10 drawing NUH61BT-71-1003 of 196.04" max plus (3.75") totaling 199.79". However, because this dimension includes the length of the grapple ring, which is not consistent with the other appendices describing canisters, Section A.1.4.7.1 of Appendix A.1.4.7 is changed to state a dimension of 196.0" instead of 199.7".

2-35 Explain how arbitrarily increasing g-loads by 20% (page A.2.13.8-3) accounts for cold ambient conditions in HAC analysis for baskets.

This information is required to assure compliance with 10 CFR 71.73(c)(1).

Response to 2-35

Based on this RAI, the 1/3 scale and full scale impact limiter analyses were rerun using the reduced integrated element instead of full integrated element (with no strain failure considered and avoiding hour-glassing).

SAR Table A.2.13.12-8 lists the new results of the full scale impact limiter analyses. In order to calculate the g loads due to the low temperature effect of the wood, three end drop analyses are performed using wood properties at room, -20 °F, and -40 °F temperature. The g load factors due to -20 °F and -40 °F temperature wood properties effects are 1.11 (49.7/44.9) and 1.16 (52/44.9), respectively.

The baseline g loads used for structural component evaluations are calculated in SAR Section A.2.13.12.10 by using the peak rigid body deceleration results from the room temperature times

the g load factors calculated above.

SAR Page A.2.13.8-3 is revised to be consistent with the new results from the impact limiter analyses.

2-36 Explain the comparison between peak g-load from LS-DYNA analysis versus average from all accelerometers on page A.2.13.12-7.

This appears to be neither what was actually compared, nor a valid comparison.

This information is required to assure compliance with 10 CFR 71.73(c)(1).

Response to 2-36

The peak g-load calculated from LS-DYNA analyses corresponds to the average of the nodal accelerations at the cross sections that match the locations of the accelerometers in the 1/3 scale test specimen, as shown in SAR Figure 2.10.9-7 of the NUHOMS®-MP197 main SAR text. The resulting average acceleration, for each analysis case, is compared with the average accelerations obtained from all accelerometers at the particular location. Figure A.2.13.12-56 is added to the SAR Chapter A.2, Appendix A.2.13.12 to show the location of the nodes in the LS-DYNA model used for the averaging.

2-37 Provide the node numbers and locations for the LS-DYNA analysis corresponding to the 1/3 scale 20 degree slapdown test gage locations.

This information is required to assure compliance with 10 CFR 71.73(c)(1).

Response to 2-37

Please see the response to RAI 2-36. Due to the large numbers of nodes in these locations, node numbers are not provided here. However, these nodes can be selected and reviewed from the result files provided in the submittal.

2-38 Provide calculations and pertinent details of cladding integrity of low burn-up fuel under regulatory Hypothetical Accidental Conditions, as applicable for the nine different DSC models that is proposed to be transported in the MP 197-HB cask.

The staff is currently reviewing the TN-40 application, and have encountered issues with the structural integrity of the low burn-up fuel; particularly the fact that under a 30 feet drop the cladding undergoes plastic deformation, as indicated in TN's latest ANSYS/LS-DYNA analyses. Staff is concerned that similar issues may also be applicable to TN MP -197-HB cask. The staff is further concerned regarding cross-cutting issues related to structural integrity adequacy, and as a result the subsequent criticality issues.

This information is needed to satisfy 10 CFR 71.73.

Response to 2-38

New LSDYNA analyses are performed for the fuel cladding in response to RAI 2-30 in which the methodology is identical to the latest analyses performed for the TN-40 Transport application. Low burnup as well as high burnup fuel claddings are evaluated. Please see updated SAR Section A.2.13.11.3 for details. As with the latest TN-40 transport application analyses, the fuel cladding does not undergo plastic deformation; thus criticality analyses are not affected.

Thermal

3-1 Verify that all material property values used in the analysis of the NUHOMS-MP197 transportation package are realistic or bounding.

Note 1 on page A.3-12 of the SAR states that "for Aluminum Type 1100, a thermal conductivity of 11.150 Btu/hr-in-°F (133.8 Btu/hr-ft-°F) is used in the ANSYS analysis since the basket temperature is over 150°F for all analyzed cases, this value does not affect the results in the SAR." By examining the tabulated thermal conductivity of this material, it appears that using this value would underestimate thermal conductivity at normal or accident operating temperatures since thermal conductivity decreases as temperature increases.

This information is needed to determine compliance with 10 CFR Part 71 (71.71 and 71.73).

Response to 3-1

The conductivity value of 11.150 Btu/hr-in-°F is used only at 100 °F for Al-1100 in the input files of the ANSYS models for the baskets. The other values for other temperatures are correctly applied in the input files. The intention of the note on SAR Page A.3-12 was to show that the error in the input file for the aluminum conductivity at 100 °F does not have any effect on the results since all the component temperatures of the baskets are much higher than 100 °F. This is evident from temperature profiles shown in SAR Figures A.3-31, A.3-32, and A.3-34.

Note 1 on SAR Page A.3-12 is revised for clarification.

3-2 Clarify which DSCs proposed for transportation in NUHOMS-MP197 package have been added under 10 CFR 72.48 provisions.

Table A.1-2 of the SAR provides a number of DSC types that can be part of the MP197HB transport configuration. The application refers to several certificates for storage of spent fuel (1030, 1004, 1029) as a technical basis, and the staff needs to determine which calculations may have been audited previously.

This information is needed to determine compliance with 10 CFR Part 71 (71.71 and 71.73).

Response to 3-2

The following table identifies the CoC and amendments under which the calculations for storage applications were reviewed by NRC. Please note that there are no storage applications submitted for DSC types NUHOMS®-37PTH, -69BTH, and 61BTH and 24PTH DSCs with failed fuel (61BTHF and 24PTHF, respectively) at this time.

Record of NRC Review for DSC Types Proposed for Transport in MP197HB Packaging

DSC Type	Sub Type	CoC No.	NRC Review
NUHOMS®-24PT4	—	1029	Amendment 1
NUHOMS®-32PT	-S100	1004	Amendments 5, 8 and 10
	-S125		
	-L100		
	-L125		
NUHOMS®-24PTH	-S	1004	Amendments 8 and 10
	-L		
	-S-LC		
NUHOMS®-32PTH	—	1030	Amendment 0 for NUHOMS®-32PTH NUHOMS®-32PTH Type 1 was added under 10 CFR 72.48 provisions to increase the cavity length.
	Type 1		
NUHOMS®-32PTH1	-S	1004	Amendment 10
	-M		
	-L		
NUHOMS®-61BT	—	1004	Amendments 3, 7 and 9
NUHOMS®-61BTH	Type 1	1004	Amendment 10
	Type 2		
NUHOMS®-37PTH	-S	1004	No Storage Application [1]
	-M		
NUHOMS®-69BTH	—		
NUHOMS®-61BTH with failed fuel (61BTHF)	—		
NUHOMS®-24PTH with failed fuel (24PTHF)	-S		
	-L		
	-S-LC		

[1] *Storage applications for these DSC are planned for Amendment 12 to CoC 1004.*

3-3 Clarify if 69BTH and 37PTH DSCs have been licensed for storage under 10 CFR Part 72 provisions.

Table entitled "Applicable Code Years for Each Canister Design" on page A.3-28 of the

SAR states that storage license No. 1004 is applicable for these canisters.

This information is needed to determine compliance with 10 CFR Part 71.33.

Response to 3-3

The NUHOMS®-69BTH DSC, -37PTH DSC, -24PTH DSC with failed fuel (24PTHF), and -61BTH DSC with failed fuel (61BTHF) are not licensed under 10 CFR Part 72 provisions. The table on SAR page A.3-28 is corrected.

3-4 Demonstrate by analysis that the personnel barrier is not exposed to hot stream air from the cask shield shell.

Page A.3-38 of the SAR states that since the personnel barrier is far apart from the cask shield shell, it is not exposed to the hot air streams from the cask. The applicant should perform a thermal analysis (e.g., CFD analysis) to demonstrate the validity of this assumption.

This information is needed to determine compliance with 10 CFR Part 71 (71.71).

Response to 3-4

SAR Section A.3.3.1.2.1 is added to justify the assumption that the personnel barrier is not exposed to hot stream air from the transport cask shield shell.

3-5 Provide poison material density and specific heat and clarify why it is conservative to assume for poison material heat capacity values are equal to those of aluminum 6061.

Page A.3-58 of the SAR states that for the calculation of 69BTH basket effective thermal properties, poison material heat capacity values are conservatively assumed equal to those for 6061 aluminum. However, poison material heat capacity values are not provided in the SAR for the staff to make a determination on the validity of this assumption.

This information is needed to determine compliance with 10 CFR Part 71.71.

Response to 3-5

As described in SAR Section A.3.2.2, BORAL®, MMC, and Borated Aluminum types of poison materials can be used as neutron absorber in the 69BTH basket.

For the calculation of the 69BTH basket effective density and specific heat in the transient analysis of the MP197HB TC for HAC described in SAR Section A.3.4 and for the sensitivity analysis for HAC using the coupled model described in SAR Appendix A.3.6.10, specific heat (c_p) and density (ρ) of Al 6061 are assumed for the poison plates.

For a composite material such as Boral® or MMC which are made of B_4C and aluminum, if the heat capacity (product of specific heat and density) of Al 6061 is lower than the heat capacity of each component in the composite, then the heat capacity of Al 6061 would be lower than the heat capacity of the composite. Using a lower heat capacity results in a higher peak temperature for a transient analysis, which is conservative for the purpose of the HAC evaluation.

Heat capacities of various types of aluminum (e.g., Al 6061, Al 1100) have negligible differences. The heat capacity of Al 6061 is compared to the heat capacities of the B_4C in Table 3.5-1 below to demonstrate that using the specific heat (c_p) and density (ρ) of Al 6061 is bounding for Boral or MMC in the transient HAC analysis.

Table 3.5-1 Comparison of Al 6061 and B_4C Heat Capacities

	Al 6061 [See SAR Section A.3.2.1, Item 10]		Boron Carbide (B_4C) [Ref. 3.5-1]		
Temp	ρ	Cp	ρ (1)	Cp (2)	$\frac{(\rho \times C_p)_{Al6061}}{(\rho \times C_p)_{B_4C}}$
(°F)	(lbm/in^3)	(Btu/lbm-°F)	(lbm/in^3)	(Btu/lbm-°F)	(---)
70	0.098	0.213	0.090	0.237	0.98
100		0.215		0.242	0.96
150		0.218		0.251	0.94
200		0.221		0.260	0.92
250		0.223		0.269	0.90
300		0.226		0.277	0.88
350		0.228		0.286	0.87
400		0.230		0.294	0.85

(1) *Based on theoretical density at 300K from [Ref. 3.5-1], Section 8.4.3.*
(2) *Based on Eq. (8-3) from [Ref. 3.5-1], Section 8.2.2.*

As shown in Table 3.5-1, the heat capacity of Al 6061 is lower than B_4C. Based on the above discussion, it is conservative to use the specific heat (c_p) and density (ρ) of Al 6061 for the purpose of the HAC evaluation.

Samples of typical borated aluminum, such as those proposed for use in the 69BTH basket, were tested in [Ref. 3.5-2] for thermophysical properties. The results of the test and their comparison to the heat capacity of the Al 6061 are summarized in Table 3.5-2 below.

Table 3.5-2 Comparison of Al 6061 and Borated Aluminum Heat Capacities

	Al 6061 [See SAR Section A.3.2.1, Item 10]		Borated Aluminum [Ref. 3.5-2]		
Temp	ρ	Cp	ρ	Cp	$\frac{(\rho \times C_p)_{Al6061}}{(\rho \times C_p)_{AlB}}$
(°F)	(lbm/in^3)	(Btu/lbm-°F)	(lbm/in^3)	(Btu/lbm-°F)	(---)
70	0.098	0.213	0.097	0.207	1.04
100		0.215		0.212	1.02
150		0.218		0.220	1.00
200		0.221		0.225	0.99
250		0.223		0.229	0.98
300		0.226		0.233	0.98
350		0.228		0.236	0.97
400		0.230		0.239	0.97

As shown in Table 3.5-2, the heat capacity values of Al 6061 are lower than borated aluminum for temperatures above 150°F. Since the 69BTH basket temperatures are above 150°F for all analyzed cases, using the specific heat (c_p) and density (ρ) of Al 6061 for borated aluminum is conservative for the purpose of the HAC evaluation.

References for RAI 3-5

3.5-1. *Idaho National Engineering and Environmental Laboratory, "SCDAP/RELAP5/MOD 3.3 Code Manual, MATPRO – A Library of Materials Properties for Light-Water-Reactor Accident Analysis," by L.J. Siefken, E.W. Coryell and E.A. Harvego, NUREG/CR-6150, Vol. 4, Rev. 2 (INEL-96/0422), January 2001.*

3.5-2. *Taylor, R.E., et al., "Thermal Conductivity of Aluminum-Boron Alloy," Properties Research Laboratory, Purdue University, Document No. PRL-801, May 1989.*

3-6 Perform the thermal evaluation for Normal Conditions of Transportation (NCT) for all DSCs proposed for payload in the NUHOMS-MP197 transportation package using the maximum heat load for transport for each DSC type.

The SAR only includes thermal evaluation during NCT for both 37PTH and 69BTH. Page A.3-67 of the SAR states: "The DSC types 61BTH, 61BT, 32PTH, 32PTH1, 32PT, 24PTH, and 24PT4 are evaluated previously for normal transfer conditions under 10 CFR Part 72 requirements. The DSC shell temperature profiles of these DSCs in MP197HB model are compared with the corresponding profiles from 10 CFR Part 72 SARs in Section A.3.6.3 of the SAR. It is shown that the fuel cladding and the basket component temperatures in 10 CFR Part 72 SARs represent the bounding values for these DSCs under transport conditions. Therefore, no additional analysis is performed for the DSCs previously evaluated under 10 CFR Part 72 conditions. The maximum fuel cladding and the basket component temperatures for these DSCs are taken from 10 CR Part 72 SARs and reported as the bounding values for transport conditions. Section A.3.6.3 of the SAR provides a summary of the justification for using bounding

temperature profiles." The SAR approach may increase uncertainty of predictions since the geometries of MP197HB transport cask and the storage transfer cask are different which may result in different DSC temperature profiles. The staff needs to have assurance the transport configuration for each DSC has been adequately analyzed in the SAR in order to make a determination on the predicted results.

This information is needed to determine compliance with 10 CFR 71.71.

Response to 3-6

Among the DSC types previously evaluated for storage applications and proposed for transport in the MP197HB, DSC type 24PTH-S (without Aluminum inserts) has the smallest margin (19 °F) for the maximum fuel cladding temperature under storage conditions and has the second highest heat load for transportation conditions (26 kW) after the 69BTH DSC. A thermal analysis of this DSC type under NCT was prepared to provide additional assurance that the arguments and evaluations reported in SAR Sections A.3.3.2 and A.3.6.3 are valid and the fuel cladding and the basket component temperatures in 10 CFR Part 72 SARs represent the bounding values for transport conditions.

SAR Section A.3.6.3 is revised to provide the thermal analysis for the DSC type 24PTH-S (without Aluminum inserts) under NCT.

3-7 Perform a sensitivity study of all assumed gaps and explain how the assumed values for these gaps are maintained (within tolerances) at or below the values used for the thermal evaluation of the NUHOMS-MP197 transportation package. Specify how these gaps are maintained within expected tolerances.

The applicant's developed thermal models described in the SAR are based on a number of explicit gaps which, according to the applicant, bound the fabrication uncertainties and are kept within tolerances but en explanation on how these gaps are controlled is not provided in the SAR. A sensitivity study performed by the staff using confirmatory analysis models shows the peak cladding temperature is very sensitive to the gap sizes assumed in the analysis.

This information is needed to determine compliance with 10 CFR Part 71 (71.71 and 71.73).

Response to 3-7

Axial and radial gaps are considered in the MP197HB TC and DSC models. The axial gaps are located toward the ends of the TC and the radial gaps are located between the multiple shells of the TC, between the basket and the DSC shell, and between the sheets and tubes within the basket. The peak cladding temperature is more sensitive to the radial gaps since the TC ends are covered with impact limiters, which act as insulators.

A thermal test is planned to assure that the thermal performance of the as-built TC satisfies or exceeds the performance considered in the TC model in the radial direction. The lead pouring process requires that the lead is cooled from the bottom up, and a molten pool of lead remains

at the top to fill gaps that form as the lead at the bottom solidifies. SAR Chapter A.8, Section A.8.1.8 is revised to address the planned thermal test.

No changes were made to the gaps assumed in the DSC models approved previously under 10 CFR 72 regulations. The validities of these assumptions were reviewed by NRC in 10 CFR 72 applications.

The radial gaps considered in the 69BTH DSC model are described in SAR Section A.3.3.1.4 and are listed below.

Radial gaps in the 69BTH DSC model:

- *69BTH-a) 0.30" diametrical hot gap between the basket outer surface and the canister inner surface.*
- *69BTH-b) 0.01" gap between any two adjacent components (tubes, neutron absorbers, wraps, rails) in the cross section of the basket.*
- *69BTH-c) 0.01" gap between the sections of the paired aluminum and poison plates in axial direction.*
- *69BTH-d) 0.1" gap between the two small aluminum rails at the basket corners.*
- *69BTH-e) 0.1" gap between the two pieces of large aluminum rails at 0° -180° and 90° -270° orientations.*

The diametrical gap between the basket and canister shell assigned as gap 69BTH-a here is controlled by dimensional inspections of the diameters of the basket and canister shell. The size of gap 69BTH-a is justified in SAR Section A.3.6.7.3 and is discussed further in response to RAI 3-11.

The gaps between adjacent basket components assigned here as gap 69BTH-b are shown in SAR Figure A.3-16 and in the figure on SAR Page A.3-136. The thermal model considers a uniform gap of 0.01" between any two adjacent components in the cross section of the basket. The structure of the 69BTH basket is similar to the 61BT and 61BTH baskets approved in accordance with 10 CFR 72 regulations. The same gap sizes were considered between adjacent components in the 61BT and 61BTH designs.

In practical terms, fabrication of the 69BTH basket requires very tightly compressed assembly in order to fit the basket into the shell. Interfaces are formed as components and parts are assembled. The fit between mating components, for example between fuel compartment tubes and adjacent sheets, cannot practically be measured. Fabrication methods provide for the tightest practical assembly of these parts.

The gaps between adjacent components are related only to the flatness and roughness tolerances of the plates. The micro gaps related to these tolerances are non-uniform and provide interference contact at some areas and gaps on the other areas as shown schematically in the figure on SAR Page A.3-131. For the purpose of thermal evaluation, surfaces of intermittent contact between adjacent components are conservatively modeled as a uniform gap of 0.01". As shown in SAR Section A.3.6.7.4, the assumed gap size of 0.01" is approximately two times larger than the contact resistances between the adjacent components. It should be noted that for conservatism no contact pressure was considered between the

components. This assumption implies that no friction exists between the components within the basket, which adds to the conservatism considered in the size of this uniform gap.

The 0.01" axial gaps between the sections of the paired aluminum and poison sheets assigned here as gap 69BTH-c are shown in SAR Figure A.3-17. The 0.1" gaps between the rail segments assigned here as gaps 69BTH-d and 69BTH-e are shown in SAR Figure A.3-15. These gaps are not located in the primary heat flow paths. A sensitivity analysis is performed to determine the effect of these gaps on the thermal performance. The results of this sensitivity analysis summarized in the following table shows that doubling the size of these gaps increases the maximum temperatures by less than 1 °F. Therefore, the effect of these gaps on the thermal performance is insignificant.

Results of the Sensitivity Analysis

	$T_{max, Fuel}$ (°F)	$T_{max,Comp}$ (°F)	$T_{max, Al/Poison}$ (°F)	$T_{max, Rail}$ (°F)
69BTH, 32kW from SAR Table A.3-10	674.3	638.3	621.8	534.3
69BTH, 32kW gaps sizes 69BTH-c, -d, and -e doubled	674.5	638.5	622.0	534.3
Difference	+0.2	+0.2	+0.2	+0.0

The radial gaps considered in the 37PTH DSC model are described in SAR Section A.3.3.1.6 and are listed below.

Radial gaps in 37PTH DSC model:

37PTH-a) *0.45" diametrical hot gap between the basket outer surface and the canister inner surface.*

37PTH-b) *0.01" gap between the basket rails and the compartment plates.*

37PTH-c) *0.0075" gap between the poison/aluminum chevrons and the fuel compartments.*

The size of gap 37PTH-a is larger than the nominal cold gap and is therefore conservative.

The gap between the basket rails and the compartment plates, assigned here as gap 37PTH-b, is shown in SAR Figure A.3-25. The basket rails are bolted to the basket plates. Therefore, very good contact is expected between the basket rails and basket plates. The contact resistance across this gap is related only to the flatness and roughness tolerances of the plates. As described above, the assumed uniform gap size of 0.01" is approximately two times larger than the contact resistances between these components.

The structure of the 37PTH basket is similar to the 32PT basket approved in accordance with 10 CFR 72 regulations. Identical to the 32PT basket, the "L" shaped poison/aluminum plates ("chevrons") are bolted to the compartment plates in the 37PTH basket. Therefore, good contact is expected between the chevrons and the compartment plates. The gap size of 0.0075",

assigned here as gap 37PTH-c, is the same size that was considered between the chevrons and the compartment plates in the 32PT basket design.

SAR, Section A.3.3.1.4 is revised to include a summary of the above discussion.

3-8 Clarify how maximum peak cladding temperatures and DSC internal cavity pressures are kept below allowable limits for reflooding events during DSC unloading.

Page A.3-79 of the SAR states that the storage operating procedures specify that the flow rate of the reflood water should be controlled such that the internal pressure in the canister cavity does not exceed 20 psig. During storage operations the maximum DSC cavity pressure is monitored during the reflood event. However, these controls are not established in Chapter 7 (Package Operations) of the SAR.

This information is needed to determine compliance with 10 CFR Part 71 (71.71).

Response to 3-8

SAR Chapter A.7 of the SAR is revised and Appendices A.7.7.1 through A.7.7.9 are added to describe the operational steps in monitoring the maximum internal cavity pressure for all the DSCs during the reflood events.

During unloading operations described in Appendices A.7.7.1 through A.7.7.9 for all the DSCs, the DSC/TC annulus is filled with water before initiating steps necessary to reflood the DSC. Presence of water in the annulus maintains the DSC shell temperature below the boiling point of 212 °F. Due to the presence of water in the DSC/TC annulus and helium in the DSC cavity, the maximum fuel cladding temperatures before initiation of reflooding are bounded by those calculated for NCT since the DSC shell temperature under NCT is significantly higher than 212 °F for all the DSCs as shown in SAR Table A.3-8 and SAR Table A.3-9. After initiation of reflooding, the evaporation of water at the hot fuel cladding maintains the fuel cladding temperature well below the allowable limits. Monitoring the cavity pressure during reflooding and controlling the reflood rate accordingly assures that the DSC cavity pressures are kept below the allowable limits.

SAR Section A.3.3.4 is revised to include the reference to operations in Appendices A.7.7.1 through A.7.7.9.

3-9 Clarify why for the homogenized basket thermal model used for transient evaluations, the decay heat load is applied as a uniform heat generation rate over the entire basket length instead of applying it only to the active fuel length using the corresponding peaking factor curve.

Page A.3-81 of the SAR states that the decay heat load is applied as a uniform heat generation rate over the homogenized basket for the transient runs. The applicant's approach would underestimate the volumetric heat generation rate and will not preserve the power profile for both BWR and PWR fuel assemblies.

This information is needed to determine compliance with 10 CFR Part 71.71.

Response to 3-9

The uniform heat generation rate applied over the entire basket length is used only in the transient model of the MP197HB TC for HAC presented in SAR Section A.3.4. This model is used only to determine the peak temperatures of the MP197HB TC components during the fire and post-fire conditions. The DSC shell temperature profiles retrieved from the cool-down steady-state analyses of the MP197HB TC HAC model are used in a steady state run to determine the maximum fuel cladding and basket component temperatures.

To demonstrate the applicability of this approach for the purpose of analyzing the MP197HB TC a coupled transient model was prepared as suggested in RAI 3-12. This coupled model includes the MP197HB TC and the bounding DSC (69BTH) and considers the homogenized fuel assemblies within compartments. All the basket components (including back-filled gas and aluminum transition rails) are explicitly modeled in the coupled model considering the same assumption described in SAR Section A.3.3.1.4 for 69BTH basket.

The results of the coupled model and its comparison to the results of the decoupled models are discussed in the response to RAI 3-12.

3-10 Explain why the basket temperatures are the same (547°F) for both HLZC#1 (26 kW) and HLZC#4 (32 kW) for NCT at 100°F ambient temperature.

Page A.3-133 of the SAR states these temperatures are the same regardless of the total heat load.

This information is needed to determine compliance with 10 CFR Part 71.71.

Response to 3-10

The values reported on SAR Page A.3-133 are the average temperatures of the compartments and wrap plates and not the maximum temperatures. The same average basket temperature for both HLZC # 1 (26 kW) and HLZC # 4 (32 kW) of 547 °F is a coincidence. Although the total heat loads are different, the same average basket temperatures for both HLZCs are due to the difference in the placement of the fuel assemblies in the basket. For HLZC # 1 with the maximum heat load of 26 kW, all of the 69 compartments are loaded and the inner core compartments (Zones Z1 to Z4 shown on SAR Page A.3-52) include a maximum heat load of 10.04 kW, whereas for HLZC # 4 with the maximum heat load of 32 kW, only 52 compartments are loaded, in which the inner core compartments (Zones Z1 to Z3 shown on SAR Page A.3-55) include only a maximum heat load of 3.6 kW.

The unloaded core compartments (17 compartments in Zones Z1 and Z3 shown on SAR Page A.3-55) have lower temperatures than the outer compartments in HLZC#4. This results in an average temperature of the basket plates for HLZC#4, which is coincidently the same as the average temperature of the basket plates for HLZC#1.

3-11 Explain why the diametrical hot gap for the 69BTH basket increases with increasing total heat load.

Page A.3-135 of the SAR shows that the diametrical hot gap between the basket and the cask inner shell is larger for 32 kW heat load (0.297") as compared to 26 kW heat load (0.286"). Given the trend in this gap as a function of the total decay heat load, it would be reasonable to use the nominal gap of 0.4 (as described in the SAR) because it would result in bounding temperatures.

This information is needed to determine compliance with 10 CFR 71.71 and 71.73.

Response to 3-11

The hot gap sizes between the DSC shell and the basket calculated in SAR Section A.3.6.7.3 are based on average temperatures of the DSC shell and basket components. These average temperatures are controlled not only by the maximum heat load but also by the heat load zoning configuration (HLZC).

The 69BTH DSC with HLZC # 1 and maximum heat load of 26 kW contains 69 fuel assemblies, which means that all of the compartments are loaded with fuel assemblies. While the 69BTH DSC with HLZC # 4 and maximum heat load of 32 kW contains only 52 assemblies, in which 17 of the core compartments remain unloaded (empty/dummy assemblies). The unloaded core compartments in the 69BTH DSC with HLZC # 4 have lower temperatures than the outer compartments. This results in an average temperature of the basket plates for HLZC # 4 which is coincidently the same as the average temperature of the basket plates for HLZC # 1.

Since the total heat load is ultimately rejected through the DSC shell, the average DSC shell temperature for HLZC # 4 with 32 kW heat load is much higher than the average DSC shell temperature for HLZC # 1 with 26 kW heat load.

Having the same average basket temperature but higher DSC shell temperature for HLZC # 4 (32 kW) in comparison to HLZC # 1 (26 kW) results in a slightly larger radial gap between the basket and the DSC shell for HLZC # 4.

The hot gap sizes calculated for the 69BTH DSC on both ends of the loading spectrum (HLZC # 4 with 32KW and HLZC # 1 with 26 kW) are lower than the assumed hot gap of 0.3". Since both ends of the loading spectrum are covered, the assumed hot gap is bounding and a higher heat load is not allowed for the 69BTH DSC.

3-12 Perform coupled transient calculations of NUHOMS-MP197 transportation package during hypothetical accident conditions (HAC) for the fire and post-fire (cool-down) periods. The coupled calculations should be based on a model which includes the MP197HB Transport Cask (TC) and the bounding DSC (e.g., 69BTH). The bounding DSC model should be based on homogenized fuel compartments and should explicitly model all the basket components (including back-filled gas and aluminum transition rails) as described in SAR Section A.3.3.1.

SAR Section A.3.4 describes the applicant=s approach to analyze the HAC (fire) event

which is based on a combination of transient calculations of the MP197HB TC (including a homogenized basket) and steady state calculations of the MP197HB TC and DSC (including basket components as described in Section A.3.3.1 (Thermal Models) of the SAR) as separate thermal analyses. These models are used to calculate the component maximum temperatures (including cladding temperatures). This approach may underestimate seal and fuel temperatures because it lacks the ability to capture the real transient behavior during the fire and cool-down stages. The approach also involves a number of simplifications and assumptions that may increase thermal model uncertainties. See also RAI 3-8.

This information is needed to determine compliance with 10 CFR Part 71.73.

Response to 3-12

To justify the approach considered in the analysis of the MP197HB Transport Cask (TC) for HAC described in SAR Section A.3.4, a coupled transient model was prepared as suggested in RAI 3-12.

The coupled model was created by introducing the elements and nodes from the 69BTH DSC model described in SAR Section A.3.3.1.4 into the TC model with crushed impact limiters described in SAR Section A.3.4. The 69BTH DSC and the MP197HB TC thermal models have dissimilar meshes at their interfaces since the mesh density of the 69BTH basket model is much finer than the mesh density considered in the TC model. These two dissimilarly meshed models are tied together using constraint equations via the "CEINTF" command in ANSYS.

To ensure the correct application of the constraint equations, the coupled model containing the same fined meshed DSC shell is benchmarked versus the results of the TC model described in SAR Section A.3.3.1.1 for NCT.

The coupled model includes the MP197HB TC and the bounding DSC (69BTH with 32 kW heat load) and considers the homogenized fuel assemblies within compartments. All the basket components (including back-fill gas and aluminum transition rails) are explicitly modeled in the coupled model considering the same assumptions as described in SAR Section A.3.3.1.4 for the 69BTH basket. The ambient boundary conditions and the heat generation boundary conditions in the coupled model are identical to those described in SAR Sections A.3.4 for the TC model and in Section A.3.3.1.4 for the 69BTH DSC model, respectively.

The coupled model and its evaluation are discussed in detail in SAR Section A.3.6.10.

3-13 Clarify why each canister type has different NCT and HAC pressure limit during transport.

Table A.3-23 of the SAR presents the maximum internal pressure in DSC for transport in the NUHOMS-MP197 package. The NCT and HAC pressure limits provided in this table are different for each DSC. The application should discuss how each pressure limit for transportation was derived for the canister.

This information is needed to determine compliance with 10 CFR Part 71 (71.71 and 71.73).

Response to 3-13

The pressure limits presented in SAR Table A.3-23 are the design pressures considered for structural evaluation of each DSC. Based on design features, such as end plate configurations, weld sizes, etc., each DSC type is evaluated structurally for a specific design pressure for NCT and HAC. The evaluation of the DSC internal pressures in SAR Sections A.3.3.3.2 through A.3.3.3.5 for NCT and in Section A.3.4.3 for HAC ensures that the maximum DSC internal pressures calculated based on the thermal conditions of each DSC remain below the design pressure considered in the structural evaluation of the same DSC.

SAR Pages A.3-8, A.3-75, A.3-78, A.3-92, Table A.3-22, and Table A.3-23 are revised to clarify this condition.

3-14 Describe how aluminum sleeve are inserted in the gap between the DSC shell and inner shell of MP197HB transport cask. Explain how the sleeves are kept in place during transport.

Chapter 7 of the SAR states: "If transporting any of the smaller diameter DSC models (NUHOMS®-24PT4, 32PT, 24PTH, 24PTHF, 61BT, 61BTH, or 61BTHF), or a smaller diameter secondary container, verify that the MP197HB cask has been fitted with an internal aluminum sleeve." The staff needs to verify the configuration of the aluminum sleeves during transport.

This information is needed to determine compliance with 10 CFR Part 71 (71.71 and 71.73).

Response to 3-14

The internal aluminum sleeve is described on SAR Chapter A.1, Appendix A.1.4.10 drawing MP197HB-71-1014. It is used with smaller diameter DSCs only (24PT4, 24PTH, 32PT, 61BT and 61BTH canisters).

The internal aluminum sleeve is placed in the MP197HB transport cask (TC) cavity before loading any of the DSCs mentioned above. As shown on drawing MP197HB-71-1014 (sheet 2 of 2), the bottom outer surface of the sleeve features full-length, 0.135 in-deep cutouts to accommodate the MP197HB TC rails, which prevent the sleeve from rotating during transport.

Additionally, item 2 of drawing MP197HB-71-1014 (sleeve ring spacer) is installed after loading the DSC into the MP197HB TC. This spacer, located at the top of the cavity between the internal aluminum sleeve and the MP197HB TC lid, prevents the internal aluminum sleeve to slide axially during transport.

3-15 Update Chapter 8 of the SAR to include adequate acceptance and maintenance thermal

tests to verify the heat transfer characteristics and predicted temperature profiles of the fabricated NUHOMS-MP197 transportation package.

Chapter 8 of the SAR states that "thermal acceptance and maintenance tests are not necessary for the MP197HB cask. Thermal tests are not required because the cask analysis is performed using very conservative and bounding assumptions." The analysis thermal models appear to be based on a set of assumptions that may not always result in conservative results. It also appears the heat transfer characteristics are highly sensitive to the gap sizes assumed in the analysis of the design. Also, no uncertainty or error estimates are provides in the SAR to fully assure the predicted thermal characteristics of the system.

This information is needed to determine compliance with 10 CFR Part 71.73 (71.71 and 71.73).

Response to 3-15

Heat dissipation for the MP197HB TC to ambient occurs three-dimensionally with a significant portion of the design heat load (maximum 32 kW) being radially dissipated through the neutron shield region of the TC body. The TC ends beyond the neutron shield region are covered by the impact limiters. Due to limited contact between the thermal shields and the cask end plates (TC bottom plate and TC lid) and the insulating properties of wood within the impact limiters, the heat dissipation in the axial direction is largely restricted and is insignificant in comparison to the radial heat dissipation.

The radial heat transfer performance is dependent on the degree of physical contact between adjacent TC shell components which is typically controlled by the fabrication process. Thermal testing is performed after fabrication of the MP197HB TC to measure the effective thermal conductivity of the TC in the radial direction over an approximately 10-ft exposed length within the neutron shield region. These measured thermal conductivities will be used as thermal input for the ANSYS model described in SAR Section A.3.3.1.1 for the NCT thermal analysis. The temperature distribution computed with the measured conductivity of the cask is then compared against the corresponding values in SAR Table A.3-8, and A.3-10 to demonstrate that the thermal performance of the fabricated TC is equal to or exceeds the theoretical performance reported in the SAR.

SAR Chapter 8,Section A.8.1.8 is revised to include the thermal test.

3-16 Discuss the reason for specifying design drawings, analyses, and procedures for using "optional" external fins for a canister greater than 26kW.

Some portions of the application indicate the fins are required for adequate heat transfer of DSCs loaded above 26kW, whereas other portions state they are optional.

This information is needed to determine compliance with 10 CFR Part 71.71.

Response to 3-16

As described in SAR Section A.3.1.1.1, the external circular fins are optional for heat loads greater than 26 kW to add more margin in the fuel cladding temperature. As shown in SAR Table A.3-10, the maximum fuel cladding temperature in the 69BTH DSC with 32 kW heat load without external fins is 674 °F. This is significantly below the cladding temperature limit of 752 °F. This temperature decreases to 650 °F when the MP197HB Transport Cask is equipped with the optional external fins and provides an additional 24 °F margin to the maximum allowable fuel cladding temperature.

SAR Chapter A.1 Pages A.1-2, A.1-10, and SAR Chapter A.7 Page A.7-9 are revised to ensure consistency within the SAR chapters.

3-17 Clarify the statements in the Chapter 7 operating procedures that "loading procedures may vary slightly from tasks described below." Discuss the deviations that are expected.

It is not clear what the term "slightly" means and how much deviations from the proposed operating procedures are requested for approval within the transportation certificate.

This information is needed to determine compliance with 10 CFR 71.87.

Response to 3-17

SAR Chapter 7 text is revised from "may vary slightly" to "Site specific conditions and requirements may require the use of different equipment and ordering of steps to accomplish the same objectives or acceptance criteria which must be met to ensure the integrity of the package."

3-18 Clarify in the operating procedures how the cask user verifies that a spacer of appropriate height is placed at the bottom of the cask during loading.

The procedure should provide guidance for spacer heights and respective DSC models.

This information is needed to determine compliance with 10 CFR Part 71 (71.71 and 71.73).

Response to 3-18

SAR Revision 7 adds procedures in Section A.7.1.2 and Section A.7.1.3 to ensure that the cask user verifies that a spacer of appropriate height is placed at the bottom of the cask during wet or dry loading.

3-19 Clarify the statement in DSC fuel loading procedures that "potential for fuel misloading is essentially eliminated through the implementation of procedural and administrative controls."

Fuel misloadings for a variety of physical parameters have occurred in spent fuel storage and transportation canister loadings, as well as power plant operations, which have relied upon procedural and administrative controls.

This information is needed to determine compliance with 10 CFR Part 71 (71.71 and 71.73).

Response to 3-19

The loading procedures and prevention of misloading are discussed in response to Proprietary RAI question P6-2. Please see that response for a detailed discussion of misloading conditions.

3-20 Revise the dry loading procedures to ensure the DSC is appropriately loaded with allowable contents.

The procedures provide a section for DSC Fuel loading, but appear to be limited to wet loading operations. It is the responsibility of the user to verify that all DSCs are appropriately loaded in accordance with the content specifications in the application.

This information is needed to determine compliance with 10 CFR 71.71 and 73.

Response to 3-20

SAR Section A.7.1.3 is revised to add a verification requirement to ensure that the DSC is appropriately loaded with allowable contents.

3-21 Provide any new or updated calculation along with any new or updated input and output files used to provide response to any of the thermal RAIs.

The staffs needs to review any new or updated calculation and input and output files to make a determination of the adequacy of the performed analyses.

This information is needed to determine compliance with 10 CFR Part 71 (71.71 and 71.73).

Response to 3-21

The following thermal calculations are updated or generated in response to thermal RAIs.

Calculation No.	RAI No.	Reason for Change
MP197HB-0401, Rev. 2	3-4	Justification of assumptions in the calculation of the personnel barrier temperature
MP197HB-0402, Rev. 2	2-7	Thermal evaluation of bounding 69BTH DSC for damaged, high burnup fuel assemblies (fuel rubbles) for NCT
	3-5	Justification of poison material density and specific heat
	3-6	Evaluation of DSCs for NCT to provide additional assurance/justification for bounding DSC temperatures
	3-7	Sensitivity analysis for the gaps assumed in the thermal models
MP197HB-0410, Rev. 0	3-9 and 3-12	Evaluation of Coupled TC/DSC and basket model based on 69BTH DSC for HAC

These calculations are provided in Enclosures 32, 33, and 34. The related input and output files listed below are provided in Enclosure 9.

Input / output file name	Calculation No.	RAI No.	Description
69BTH_32U_4F108h	MP197HB-0402, Rev. 2	2-7	Thermal evaluation of bounding 69BTH DSC for damaged, high burnup fuel assemblies (fuel rubbles) for NCT
24PTH_26NCT	MP197HB-0402, Rev. 2	3-6	Evaluation of DSCs for NCT to provide additional assurance/justification for bounding DSC temperatures
69BTH_32U_4G	MP197HB-0402, Rev. 2	3-7	Sensitivity analysis for the gaps assumed in the thermal models
NUH69BTH-F 69BTH_DSC_Model 69BTH_32CS_4_Map TC_69BTH_32CS_Map TC_69BTH_32CS-Coupled-HAC TC_69BTH_32CS-COMB	MP197HB-0410, Rev. 0	3-9 and 3-12	Evaluation of Coupled TC/DSC and basket model based on 69BTH DSC for HAC

Containment

4-1 Provide justification for the use of elastomeric (fluorocarbon) seals.

Previous transportation package designs from TN (i.e., the TN-68) utilize metallic seals,

which have a significantly greater performance envelope for SNF contents than elastomeric seals. Industry experience has also demonstrated challenges with evaluating seal performance (i.e., leak testing) of elastomeric seals for spent fuel packages. Given the thermal and radiological conditions proposed in this amendment request and long-term performance data and testing issues associated with elastomeric seals, the applicant should describe the basis for selecting elastomeric sealing and that it will adequately perform as intended (See RAI 4-2 and RAI 4-3 below).

The information is needed to demonstrate compliance with 10 CFR 71.51.

Response to 4-1

A fluorocarbon elastomeric seal was chosen for use on the MP197HB package because it has acceptable characteristics over a wide range of parameters, as shown in the Parker O-ring Handbook chart below:

Comparison of Properties of Commonly Used Elastomers
(P = Poor – F = Fair – G = Good – E = Excellent)

Elastomer Type (Polymer)	Parker Compound Prefix Letter	Abrasion Resistance	Acid Resistance	Chemical Resistance	Cold Resistance	Dynamic Properties	Electrical Properties	Flame Resistance	Heat Resistance	Impermeability	Oil Resistance	Ozone Resistance	Set Resistance	Tear Resistance	Tensile Strength	Water/Steam Resistance	Weather Resistance
AFLAS (TFE/Prop)	V	GE	E	E	P	G	E	E	E	G	E	E	PF	PF	FG	GE	E
Butadiene		E	FG	FG	G	F	G	P	F	F	P	P	G	GE	E	FG	F
Butyl	B	FG	G	E	G	F	G	P	G	E	P	GE	FG	G	G	G	GE
Chlorinated Polyethylene		G	F	FG	PF	G	G	GE	G	G	FG	E	F	FG	G	F	E
Chlorosulfonated Polyethylene		G	G	E	FG	F	F	G	G	G	F	E	F	G	F	F	E
Epichlorohydrin	Y	G	FG	G	GE	G	F	FG	FG	GE	E	E	PF	G	G	F	E
Ethylene Acrylic	A	F	F	FG	G	F	F	P	E	E	F	E	G	F	G	PF	E
Ethylene Propylene	E	GE	G	E	GE	GE	G	P	G	G	P	E	GE	GE	GE	E	E
Fluorocarbon	V	G	E	E	PF	GE	F	E	E	G	E	E	E	F	GE	F	E
Fluorosilicone	L	P	FG	E	GE	P	E	G	E	P	G	E	G	P	F	F	E
Isoprene		E	FG	FG	G	F	G	P	F	F	P	P	G	GE	E	FG	F
Natural Rubber		E	FG	FG	G	E	G	P	F	F	P	P	G	GE	E	FG	F
Neoprene	C	G	FG	FG	FG	F	F	G	G	G	FG	GE	F	FG	G	F	E
HNBR	N, K	G	E	FG	G	GE	F	P	E	G	E	G	GE	FG	E	E	G
Nitrile or Buna N	N	G	F	FG	G	GE	F	P	G	G	E	P	GE	FG	GE	FG	F
Perfluorinated Fluoroelastomer	V, F	P	E	E	PF	F	E	E	E	G	E	E	G	PF	FG	GE	E
Polyacrylate	A	G	P	P	P	F	F	P	E	E	E	E	F	FG	F	P	E
Polysulfide		P	P	G	G	F	F	P	P	E	E	E	P	P	F	F	E
Polyurethane	P	E	P	FG	G	E	FG	P	F	G	G	E	F	GE	E	P	E
SBR or Buna S		G	F	FG	G	G	G	P	FG	F	P	P	G	FG	GE	FG	F
Silicone	S	P	FG	GE	E	P	E	F	E	P	FG	E	GE	P	P	F	E

Table 2-2: Comparison of Properties of Commonly Used Elastomers

The fluorocarbon compound specified is VM835-75 which meets the military rubber specification MIL-R-83485. (Note that this specification has been superseded by AMS-R-83485). Fluorcarbon O-rings are normally used in applications where temperatures are between -15 °F and 400 °F. The VM835-75 compound as listed on page 8-4 of the Parker O-ring Handbook is specially formulated for use over a temperature range of -40 °F to 400 °F. SAR Section A.4.1.1.3 is revised to add this justification.

Additionally, the seals are to be replaced before every shipment, thus limiting damage due to long term irradiation and high temperatures.

4-2 Clarify statements in the SAR related to the maximum temperature the seals can withstand, as well as the cask cavity helium temperature. Provide a reference or further justification for the temperature limits.

On pages A.4-3 and A.4-4, respectively, the SAR describes the maximum temperature that the seals can withstand in accident conditions (700°F, in Section A.4.1.1.3) as well as stating a cask cavity helium temperature of 339°F (Section (A.4.2.2). Neither temperature provides a reference or further justification. In order to evaluate the validity of the temperatures stated, the staff requires a specific reference or further justification on which to base a finding.

10 CFR 71.33 requires the applicant to provide a description in sufficient detail to identify the package accurately and provide sufficient basis for evaluation of the package.

Response to 4-2

The VM835-75 seal specified for the MP197HB closures is capable of withstanding the maximum temperatures determined in SAR Chapter A.3. SAR Table A.3-16 gives the maximum HAC temperature for all seals as 386 °F and the maximum cavity helium temperature as 387 °F. The NCT temperatures predicted are lower than the HAC temperatures but are compared to the same material limit. As discussed in the response to RAI 4-1 above, the seal material is capable of withstanding temperatures of at least 400 °F. Note that Parker O-ring also gives a short term temperature limit of 482 °F for fluorocarbon seals.

4-3 Provide specific seal information (i.e., seal model number, compound designation) for the inner and outer lid seal. If this seal will be fabricated specifically for this application, the SAR should state that fact.

Drawing MP197HB-71-1002 (for items 24 and 25) provides a dimension and a material specification, but not a specific seal model number or other details to evaluate these characteristics. The application should provide specific seal information (i.e., seal model number, compound designation) for the inner and outer lid seal. The applications should clarify if this seal will be fabricated specifically for this package.

10 CFR 71.33 requires the applicant to provide a description in sufficient detail to identify the package accurately and provide sufficient basis for evaluation of the package.

Response to 4-3

SAR Chapter A.1, Appendix A.1.4.10 drawing MP197HB-71-1002 is revised. The compound designation was added to the specification of the seal material given in Note 12. The mention "custom size" was added to the description of Items 24 and 25 (lid inner and outer seals) in order to clarify the fact that those seals will be fabricated specifically for this cask.

4-4 Provide an example of elastomeric seal that appears to be referenced in the application as a type found in the Parker O-Ring seal catalog.

Page A.4-3 of the SAR indicates a particular fluorocarbon compound (V0835-75) specification that does not appear in the current Parker O-Ring catalog.

10 CFR 71.33 requires the applicant to provide a description in sufficient detail to identify the package accurately and provide sufficient basis for evaluation of the package.

Editorial:
NOTE at top of A.4-1 refers to reference list in Section A.8.3, should reference A.4.5.

Response to 4-4

In regards to the elastomeric seal, please see the responses to RAIs 4-1 and 4-3 above.

The note at the top of SAR Page A.4-1 is corrected.

Shielding

5-1 Provide the actual thickness of the borated resin and the aluminum container wall of the neutron shield building blocks.

The applicant states in page A.1-4 of the SAR that the total thickness of the resin and aluminum walls of the neutron shield block is 6.25 inches. This is not consistent with drawing MP197HB-71-1005, in which the dimension of the neutron shielding block is shown as 6.13 inches (6.63-0.50). From the same drawing, it appears that this thickness includes the inner and outer walls of the neutron poison tubes. According to the drawing, the thickness of the aluminum tube that holds the borated resin is 0.12 inches. Therefore, the thickness of the resin is only 5.89 inches. However, the NTC shielding model input file indicates that the neutron shielding is modeled as 6 inches in thickness. The applicant is requested to provide the exact dimensions of the neutron shielding blocks.

This information is needed for the staff to determine if the package design meets the regulatory requirements of 10 CFR 71.47and 71.51.

Response to 5-1

The actual thickness of the borated resin in 6.00 inches while that of the aluminum container wall is 0.12 inches. The dimensions of the radial neutron shield region are shown in Detail J of SAR drawing MP197HB 71-1005. Accordingly, the total thickness of the neutron shield resin and aluminum box is shown to be 6.25 inches. Excluding the thickness of the aluminum box (0.12 inches, both sides), the resin thickness is 6.00 inches as modeled in the shielding evaluation.

The dimension (6.63 inches) shown in Section H-H of the drawing is for the shear key cutout region of the neutron shield and the 0.50-inch dimension envelopes the thickness of the 0.38-inch neutron shield shell and the 0.12-inch aluminum box.

Note 17 is added to SAR drawing MP197HB-71-1005 to provide this clarification.

5-2 Explain the exact meaning of the term "equivalent steel shielding" and how these values are calculated. Explain how the equivalent steel layer was credited in the shielding evaluation. Explain what was credited in the shielding evaluation for packages in which spacers are not used.

The applicant states in page A.1-7 of the SAR that the secondary container assembly and the appropriate cask cavity spacers provide an equivalent of 1.75 inches minimum steel shielding in the radial direction and a minimum of 5.75 inches equivalent steel shielding and a minimum of 7.00 inches equivalent steel shielding are provided at the bottom and the top of the cask respectively.

However it is not clear what is the exact definition of the "equivalent steel shielding." The applicant is requested to provide the exact definition of the term "equivalent steel" and more importantly how these values are determined. Also, the applicant is requested to provide justification for the approach used in determining the equivalent steel shielding, i.e., why it is valid in terms of shielding capability.

It is not clear how the equivalent steel layer was credited in the shielding evaluation and what was credited in the shielding evaluation for packages in which spacers are not used. The applicant is requested to explain (1) how the equivalent steel layer was credited in the shielding evaluation, and (2) what was credited in the shielding evaluation for packages in which spacers are not used.

This information is needed for the staff to determine if the package design meets the regulatory requirements of 10 CFR 71.47and 71.51.

Response to 5-2

The term "equivalent steel shielding" was intended to provide for a minimum total thickness of steel between the radioactive source and the MP197HB cask. A detailed description of the design of the Radioactive Waste Canister (RWC) is included in a new SAR Appendix A.1.4.9A. Further, the drawings in SAR Chapter A.1, Appendix A.1.4.10 are also updated to include the RWC design. The revised description includes the following requirements:

- *The RWC shall provide for a minimum steel thickness of 1.75 inches in the radial direction beyond the waste payload,*
- *The RWC shall provide for a minimum steel thickness of 5.75 inches below the waste payload, and*
- *The RWC shall provide for a minimum steel thickness of 7.00 inches above the waste payload.*

This ensures that the term "equivalent steel shielding" is no longer needed. The shielding analysis models are based on a waste payload that fills the inner cavity of the RWC. The RWC is modeled as a cylinder with a thickness of 1.75 inches with a top shield plug thickness of 7.00 inches and a bottom shield plug thickness of 5.75 inches.

The shielding thicknesses considered in the radial and axial directions are independent of the presence of spacers and represent the "required" additional shielding for transportation of irradiated/ contaminated solid waste materials.

5-3 Demonstrate via calculation that the MP187HB cask loaded with 69BTH DSC containing DB BWR assemblies is the bounding cask in respect of the shielding design.

The applicant states, on page A.5-2 of the SAR that the MP197HB cask loaded with 69BTH DSC containing DB BWR assemblies results in bounding dose rates. However, a simple calculation indicates that the total weight of heavy materials is 18.204 (0.492x37) metric tons and 13.317 (0.193x69) metric tons for 37 PWR fuel assembly cask and 69 BWR fuel assembly cask respectively. From this result, the 69BTH DSC does not appear to have the bounding payload in terms of total spent fuel. The applicant needs to demonstrate via dose rate calculation that this cask design is indeed the bounding one for all fuel assembly types. The applicant is requested to prove that the MP197HB cask loaded with 69BTH DSC containing DB BWR fuel assemblies results in bounding dose rates.

This information is needed for the staff to determine if the package design meets the regulatory requirements of 10 CFR 71.47, 51.

Response to 5-3

The initial uranium loading (MTU) of the fuel assemblies is only employed to determine the bounding fuel assembly design from a shielding standpoint. The design basis DSC from a shielding standpoint is dependent on the number of fuel assemblies, fuel assembly source terms, geometry and material layout of the basket. The response function and fuel qualification calculations are performed to ensure that all the DSCs are similar from a shielding standpoint.

The DSCs that house the PWR fuel assemblies are constrained by higher minimum cooling times (15 to 30 years) associated with burnup credit. This generally results in lower fuel assembly source terms. The 69BTH DSC contains the maximum number of fuel assemblies with the lowest allowable cooling time of 6 years. This ensures that the source terms for the 69BTH DSC are bounding for shielding.

Based on discussions with the NRC staff, SAR Section A.5.1.1 is modified to provide this clarification.

5-4 Justify that the shielding configuration assumed after HAC is bounding.

On page A.5-2 of the SAR, the applicant states: "HAC shielding evaluation assumes that 75% of the neutron shield is lost. The impact limiters are assumed to be crushed 12" axially and the wood is removed. In addition, the top and bottom 0.375 inches of lead (axial direction) is removed to account for lead slump. Finally, the lead gamma shield radial thickness is reduced by 0.1." These assumptions result in a more severe degradation of the cask shielding properties than the accident conditions shown in Chapter A.2. Tests have shown that the neutron shielding material retains more than 60% of its principal contents (hydrogen, boron) following a design basis fire accident and a 25% credit employed in the shielding calculations is conservative. Shielding calculations for the HAC are also performed using the MCNP code." The applicant is requested to provide data to demonstrate that these assumptions are valid. (Also see RAI 2-12).

This information is needed for the staff to determine if the package design meets the regulatory requirements of 10 CFR 71.47and 71.51.

Response to 5-4

The assumptions employed in the HAC shielding analysis models are based on a more conservative interpretation of the structural analysis calculations.

The structural evaluation of the MP197HB transportation cask documented in SAR Chapter A.2, Appendix A.2.13.3 indicates that the actual calculated lead slump in the axial direction is 0.32 inches. Further, no radial lead slump is indicated, ensuring that the treatment of lead slump in the shielding evaluation is conservative.

The impact limiter calculations documented in SAR Chapter A.2, Appendix A.2.13.12 indicate that the maximum crush depth of the impact limiters in the radial and axial directions are 13.9 inches and 10.2 inches, respectively. The crush depth employed in the shielding evaluations ensures that the package surface perimeter for dose rate calculations is at the outer surface of the cask in both the radial and axial directions without taking any credit for impact limiters. Therefore, this assumption is also conservative.

The shielding analysis models assume that the neutron shielding remains in place under HAC; however, only 25% credit is included in the calculations. The performance testing of the neutron shielding resin is included as Enclosures 16 through 21. The results of the performance testing under fire conditions indicate that the loss of neutron shielding is less than 30% due to charring and out-gassing and that the resin retains its geometry. Further, the results of the structural evaluation of the MP197HB transportation cask documented in Section A.2.13.4 indicates that the neutron shielding skin shell does not detach from the cask under HAC. This ensures that the neutron shielding is held in place between the outer shell and the skin shell. Therefore, this assumption is also conservative.

5-5 Demonstrate via testing data the validity of the assumption that the impact limiters are assumed to be crushed 12" axially and the wood is removed.

On page A.5-2 of the SAR, the applicant states: "HAC shielding evaluation assumes that 75% of the neutron shield is lost. The impact limiters are assumed to be crushed 12" axially and the wood is removed. In addition, the top and bottom 0.375 inches of lead (axial direction) is removed to account for lead slump. Finally, the lead gamma shield radial thickness is reduced by 0.1"." The applicant is requested to demonstrate with testing data that this assumption is valid.

This information is needed for the staff to determine if the package design meets the regulatory requirements of 10 CFR 71.47, and 71.51.

Response to 5-5

Please see the response to RAI 5-4.

The lead slump and impact limiter assumptions are directly obtained from results of the structural analysis calculations documented in SAR Chapter A.2. The integrity of the neutron shield shell is also based on the results of the structural analysis calculations. The credit for the remaining neutron resin is based on performance testing data included in Enclosures 16 through 21.

5-6 Demonstrate that the remaining 25% of the neutron shielding layer will still able to stick to the wall after drop and fire tests.

The applicant states, on page A.5-2 of the SAR that HAC shielding evaluation assumes that 75% of the neutron shield is lost. Tests have shown that the neutron shielding material retains more than 60% of its principal contents (hydrogen, boron) following a design basis fire accident and a 25% credit employed in the shielding calculations is conservative. However, it is not clear how the remaining 25% unburned resin will be able to uniformly stick to the inner wall of the slender aluminum tubes so that a 25% credit of the neutron shield can be claimed.

This information is needed for the staff to determine if the package design meets the regulatory requirements of 10 CFR 71.47 and 71.51.

Response to 5-6

Please see the response to RAI 5-4.

The neutron shielding for the MP197HB cask is comprised of 6-inch blocks (full length) of neutron shielding resin encased in aluminum tubes. The structural analysis calculations documented in SAR Chapter A.2 demonstrate that the neutron shield shell does not detach from the MP197HB cask under HAC. This ensures that the neutron shielding resin is held in place

between the structural and neutron shield shells under HAC.

The credit for remaining neutron resin is based on performance testing data included in Enclosures 16 through 21. The results of the fire tests performed during the testing of the resin indicate that a small layer gets charred under direct fire exposure and this layer is likely to be much smaller when there is no direct exposure to fire. Tests also demonstrate that the charring is localized and does not extend to more than 0.6 inches. Therefore, the resin material essentially retains its geometry under HAC, including direct fire exposure. Hydrogen loss is tested to be less than 20%. The primary effect is a reduction in the density due to outgassing; however, the form and shape of the resin material inside the aluminum box remains essentially unchanged. The credit for neutron shielding resin assumed in the calculations is for the "neutron shielding ability" of the material and not the loss of geometry or integrity. Therefore, the credit employed is conservative and is shown to be conservative based on performance testing data included in Enclosures 16 through 21.

5-7 Pertaining to using source terms calculations for Normal Conditions of Transport and Hypothetical Accident Conditions:

Explain why different spent fuel contents were used for NCT and HAC dose rate calculations. Demonstrate that this assumption is valid and conservative.

On page A.5-2 of the SAR, the applicant states: "The DB FA for Normal Conditions of Transport (NCT) dose rate analysis has an initial enrichment of 3.8 wt% U-235 bundle-average burnup of 55,000 MWD/MTU with a 7 3/4 year decay time. The DB FA with an enrichment of 4.3 wt% U-235 and a bundled-average burnup of 70,000 MWD/MTU and 21.0 year decay time generates radiological sources for the shielding performance evaluation of the cask at HAC." On page A.5-4 of the SAR, the applicant states: "The design basis radiological sources for NCT and HAC are due to DB FA irradiated at a constant specific power of 12.4 and 15.8 MW/assembly to a total bundle average burnup of 55,000 and 70,000 MWD/MTU, respectively." However, it is not clear what the purpose was for doing so. It is not clear what the technical basis was for performing dose rate calculations using different source terms from different contents (i.e., different power densities, different burnups and different initial enrichments) for different cask conditions (NCT and HAC). In general, the dose rates for both NCT and HAC conditions are evaluated with the same source terms but under different packaging conditions. The safety analyses should be performed for the real package designs, including the contents and packaging, rather than with different contents. With changes in both cask physical conditions and source terms, the dose rates will be the results of combination of altering two key parameters at the same time. The meaning of the dose rate results is not understandable. It would be difficult to interpret the results because the results are no longer the same meaning as defined in 10 CFR 71.51. The applicant is requested to:

1. explain the purpose of doing so;
2. provide technical basis and justification for using this approach;
3. provide an interpretation for the results so obtained in terms of 10 CFR 71.51; and
4. demonstrate that this approach produces conservative dose rate calculation results.

This information is needed for the staff to determine if the package design meets the regulatory requirements of 10 CFR 71.47 and 71.51.

Response to 5-7

The purpose of employing different sets of source terms for NCT and HAC is to ensure that the calculated maximum dose rates are appropriate. Further, the differences in the shielding configurations during NCT and HAC require that appropriate source terms are employed that result in maximum calculated dose rates.

The technical basis for performing dose rate calculations using different source terms for NCT and HAC evaluations is described in the first two paragraphs of SAR Section A.5.3.3.1.

The fuel qualification for the various DSCs authorized to be loaded in the MP197HB transport cask is performed to determine the acceptable burnup, enrichment and cooling time (BECT) combinations. Response functions are calculated for each DSC such that the maximum dose rate at 2 meters from the radial surface of the impact limiters is less than 10 mrem/hour. This ensures that some of the entries (those where the resulting dose rates are slightly less than 10 mrem/hour) in the fuel qualification tables (FQT) are approximately equal from a dose rate standpoint. Therefore, for NCT, a representative BECT combination is employed to calculate the dose rates. This NCT calculation also provides an additional validation of the response function based calculation of the FQTs.

The HAC configuration is based on substantial loss of neutron shielding. Therefore, the bounding source terms for HAC are based on BECT combinations that result in a maximum contribution from neutron sources. The source terms employed for HAC result in bounding dose rates.

In summary, some of the BECT combinations (moderate to high burnup) in the FQT will result in approximately the same maximum dose rates at NCT due to the methodology employed for fuel qualification. Therefore, there is no "design basis" or "bounding" set of source terms for NCT. The BECT combination employed for HAC is bounding since it maximizes the contribution from neutron sources.

Regarding 10 CFR 71 dose rate compliance,

- *the NCT source terms are selected such that the resulting NCT dose rates meet the applicable limits under 10 CFR 71.47, and*
- *the HAC source terms are selected such that the resulting HAC dose rates meet the applicable limits under 10 CFR 71.51*

This approach is demonstrated to be conservative for HAC because the selected source terms maximize the neutron dose rates. This approach is also applicable for NCT because the fuel qualification ensures that the resulting dose rates do not exceed those calculated using these source terms. In other words, when the HAC source terms are employed in the NCT calculations, the resulting dose rates will not exceed those calculated using the NCT source terms.

An additional clarification is added to SAR Sections A.5.2 and A.5.4.1.

5-8 Demonstrate via calculation that the source terms calculated using the SAS2H code are conservative given the fact that there are about 11% uncertainties in the SAS2H calculation.

On page A.5-6 of the revised SAR, the applicant states: "Reference [13] documents that SAS2H tends slightly to over predict the concentration of ^{244}Cm when burnup is varied during the sensitivity study. Therefore, as the ^{244}Cm isotope accounts for more than 90% of the total neutron source term, the uncertainty in the neutron source and associated neutron dose rates is expected to be less than $\pm$11%." On the same page, the applicant further states: "The uncertainty value of 10% is an uncertainty in the ability of the SAS2H code to predict the isotopic concentration of nuclides in the fuel. In many cases, this results in SAS2H over-predicting the quantity of certain fission product or actinide isotope, thereby resulting in a conservative prediction of source terms. These benchmarks demonstrate that the neutron spectrum calculated by SAS2H during depletion is appropriate for the purpose of source term calculations. An uncertainty has not been applied in the dose rate calculations." The staff reviewed this assertion and compared it with the results from the relevant publications [Ref. 1, 2, 3] and found the conclusion inaccurate. For some of the isotopes, i.e., the major gamma emitters such as ^{154}Eu, and ^{155}Eu, SAS2H on average actually underestimates the concentrations by about 7.8% and 42.6%. For the dominant neutron emitter ^{244}Cm, SAS2H actually underestimates the concentration by 19.4%. Therefore, the assertion that SAS2H always over-predicts isotopic concentration is not acceptable. The applicant is requested to demonstrate that SAS2H always over-predicts isotopic concentrations for major fission products and actinides. Otherwise adjustments to the source terms must be made and the cask dose rates must be recalculated based on the new source term data.

This information is needed for the staff to determine if the package design meets the regulatory requirements of 10 CFR 71.47 and 71.51.

Response to 5-8

This response is proprietary and is provided in Enclosure 3.

5-9 Pertaining to the axial peaking factors:

1. Explain how the peaking factors in Tables A.5-15 and A.5-16 for neutron and gamma were determined.
2. Provide justification on why these factors are bounding for all fuel assemblies.

The applicant provides the neutron and gamma source axial peaking factor values in Tables A.5-15 and A.5-16 of the SAR for BWR and PWR fuel respectively. However, it is not clear how these values are derived from the values provided in the referenced publication. It is not clear either why these peaking factors provide bounding values for all spent fuel assemblies to be transported by the TN NUHOMS-MP197HB.
This information is needed for the staff to determine if the package design meets the regulatory requirements of 10 CFR 71.47, 51.

Response to 5-9

SAR Section A.5.2.1 is revised to describe the calculation of the peaking factors for neutron and gamma sources. SAR Table A.5-15 and Table A.5-16 are modified to include additional information to be consistent with the description in SAR Section A.5.2.1.

The justification required to show that the applicability of the axial burnup profiles for PWR and BWR fuel assemblies is also included in the revised SAR Section A.5.2.1.

5-10 Pertaining to the gamma source terms at NCT and HAC as provided on page A.5-9 of the SAR:

1. Explain why the energy dependence of the source terms is excluded from the source term definitions.
2. Explain why the gamma source term for HAC conditions is lower than that of the NCT conditions.
3. Redo the dose rate calculations for both Normal Conditions of Transport and Hypothetical Accident Conditions.

The applicant provides total gamma source terms for the packages under Normal Conditions of Transport and Hypothetical Accident Conditions. However, it is not clear how these values are derived. It is not clear either what is the technical basis for being able to use a single energy source term rather than a gamma spectrum in shielding evaluation. In addition, it appears that the gamma source term for package under HAC is lower than that of the package under NCT. The applicant is requested to provide explanations for these questions and redo the shielding analyses, if necessary, based on the energy dependent source terms.

This information is needed for the staff to determine if the package design meets the regulatory requirements of 10 CFR 71.47and 71.51.

Response to 5-10

The MCNP shielding analysis models also require a detailed description of the source that includes the source radial, axial and spectral distribution. The gamma spectral distribution is provided in SAR Table A.5-11 for NCT and Table A.5-12 for HAC. Since MCNP results are based on dose rates per source particle, a scalar multiplier that is based on the total source strength is required to determine the dose rates from the MP197HB package. Therefore, the total source term calculations are performed as shown in SAR Section A.5.2.2.1.

As indicated in the response to RAI 5-7, the source terms for the HAC are calculated to ensure that the neutron dose rates are maximized (due to loss of neutron shielding). The change in the gamma source does not result in an appreciable change in the gamma dose rate under HAC because of substantially similar shielding characteristics. However, a change in the neutron source will result in an exponential change in the dose rate (neutron and secondary gamma) due to loss of neutron shielding. Therefore, the gamma source term for HAC is lower than that for NCT. The results of gamma dose rate calculations at 1 meter using NCT and HAC source

terms is shown in Table A.5-23 (6.1 mrem/hour) and Table A.5-26 (4.3 mrem/hour), respectively. A comparison of the gamma dose rates to the HAC neutron dose rate of approximately 300 mrem/hour indicates that the gamma source terms are rendered insignificant under HAC. Therefore, no new dose rate calculations are required.

5-11 Provide source term calculation results to demonstrate that the source terms presented in the SAR are accurate.

On page A.5-11 of the SAR, the applicant presents the total neutron source terms for both Normal Conditions of Transport and Hypothetical Accident Conditions. However, the staff was unable to reproduce the results with the same fuel assembly parameters but with a newer version of Origen/Arp code, which is part of the SCALE package. The applicant is requested to provide source term calculation results to demonstrate that the source terms presented in the SAR are accurate.

This information is needed for the staff to determine if the package design meets the regulatory requirements of 10 CFR 71.47 and 71.51.

Response to 5-11

The SAS2H/ORIGEN-S source term input and output files for NCT and HAC are provided on the disc included in Enclosure 9.

5-12 Explain what the boron content in Table A.5-8 represents.

On page A.5-112 of the SAR, the applicant presents the Design Basis Fuel assembly characteristics. One of the items is "Channel avg. ^{10}B content" and the unit is atom/b-cm. The value for this item is given as 715 ppm. It is not clear what this item is for because burnable poison contents are typically provided in terms of weight percent, or number density and soluble boron is given in terms of part per million. Since this is not a PWR fuel assembly, soluble boron is not an option. The applicant is requested to explain the meaning of this parameter and provide the source term calculation to demonstrate the source terms were calculated correctly.

This information is needed for the staff to determine if the package design meets the regulatory requirements of 10 CFR 71.47 and 71.51.

Response to 5-12

The boron content in SAR Table A.5-7 represents the spectral effect at the periphery of the fuel assembly to account for the control rod movement during depletion. The soluble boron is modeled as a "channel moderator" that represents the moderator outside the channel between adjacent fuel assemblies. This is a reasonable yet simplified representation of the control rod movement. The use of soluble boron during BWR depletion is included in SAR Chapter A.5 Reference [11].

The channel moderator in the SAS2H models in Chapter A.5 is modeled using a density of 0.669 gm/cm^3 and a low soluble boron concentration. The density multiplier of 7.15 e^{-6}

employed in the material specification input to the SAS2H model represents a boron concentration of 50 ppm. SAR Table A.5-7 is modified to provide this clarification.

Reference [11] is O.W. Hermann, C.V.Parks, and J.P.Renier "Technical Support for Proposed Decay Heat Guide Using SAS2H/ORIGEN-S Data," NUREG/CR-5625, ORNL-6698, July 1994.

5-13 Correct the text "...the gamma and neutron radiation doses for the bounding shielding analysis of the cask" on page A.5-12. It should be "dose rates" rather than "doses." This information is needed for the staff to determine if the package design meets the regulatory requirements of 10 CFR 71.47.

Response to 5-13

The text in SAR Section A.5.3 is corrected to read "dose rates" instead of "doses".

5-14 Explain how the peaking factor was applied in the shielding model.
The applicant provides in Section A.5.2.1 the estimated source term peaking factors in the fuel regions. However, it is not clear how these peaking factors were used in the shielding model given that there is only one fuel region in the model. In particular, the applicant states: "Four SAS2H/ORIGEN-S runs are required for each combination to determine gamma source terms for the four fuel assembly regions (i.e., bottom, in-core, plenum and top)." In addition, the applicant states on page A.5-15 that the sources are uniformly homogenized over the cross section and the appropriate zone length. However, it was not clear how the peaking factors were used in the homogenized fuel region. The applicant is requested to provide explanation for how these peaking factors were used in the shielding calculations, given the fact that the fuel zone is uniformly homogenized over the fuel zone length.
This information is needed for the staff to determine if the package design meets the regulatory requirements of 10 CFR 71.47, 51.

Response to 5-14

The neutron and gamma peaking factors listed in SAR Table A.5-15 and A.5-16 are to be applied only to the active fuel region. These peaking factors are not applied to the end fitting or plenum regions, which use a flat distribution.

The BWR fuel assembly active fuel length is divided into 12 axial zones, as indicated in Table A.5-15. The SAR text that states that the source is homogenized over the "appropriate zone length" is referring to these 12 zones. This distribution is applied in MCNP using the si6 and sp6 cards in the input file. For example, see the gamma input file on page A.5-95. The si6 card provides the axial bin boundaries in MCNP, and the sp6 card provides the probability of the source particle being generated in this zone. Because zones 1, 2, 11, and 12 have half the width of zones 3 through 10, the gamma peaking factors for these zones must be divided by 2 prior to input to MCNP. For example, the axial peaking factor for Zone 1 is input as 0.2256/2 =

0.1128, while the axial peaking factor for Zone 3 is input directly as 1.0854. One could also input the actual number of source particles in each zone on the sp6 card directly, as MCNP automatically normalizes all input distributions. The method of determining the number of source particles in each zone was discussed in the response to RAI 5-9.

5-15 Pertaining to the fuel compartment material density homogenization:

1. Provide justification for neglecting the void in the fuel assemblies in the shielding model.
2. Provide calculations for the fuel compartment material density.
3. Revise the shielding analyses if necessary with actual material density in the fuel regions. A homogenized fuel compartment based the actual fuel density and void fraction is an acceptable approximation if the applicant desires to do so.

On page A.5-13, regarding modeling of the applicant states: "Voids are neglected within the fuel assembly." However, it is not clear why the voids in the fuel assemblies can be neglected. In general, using increased material density in shielding calculations will result in lower dose rates because of denser materials will have higher self shielding. Typically, voids are included in calculating the material density of the homogenized fuel region to preserve the total material in the fuel compartments. Neglecting the voids in the calculation will result in higher material density than it should be. The applicant is requested to provide justification for neglecting the void in the fuel assemblies in the shielding model.

The applicant provides in Table A.5-17 the material densities for the fuel compartment. However, it is not clear how these data were calculated. It is not clear either if these material density data were calculated based on spent fuel composition. The applicant is requested to provide information on these material density data were calculated and what were the assumptions used in these calculations.

The applicant is requested to revise the shielding analyses based on actual fuel assembly geometry and material densities. A homogenized fuel compartment based on the actual fuel density and void fraction may be an acceptable approximation. However, void cannot be neglected in fuel region homogenization process.

This information is needed for the staff to determine if the package design meets the regulatory requirements of 10 CFR 71.47 and 71.51.

Response to 5-15

The statement "Voids are neglected within the fuel assembly" is meant to imply that no mass is assumed to exist in the voids (or gaps) so they can be ignored when determining the total mass in the fuel assembly region. The voids are not neglected in the fuel assemblies when they are homogenized for the shielding model. The densities of the homogenized regions are calculated by summing all of the material in the region and dividing by the volume. The volume of the fuel assembly region is determined solely by the outer dimensions, so void space is accounted for.

SAR Section A.5.3.1.1 is modified to provide this clarification and include an example

calculation.

5-16 Concerning the fuel plastic deformation, the applicant is requested to:

1. Provide justification for the assessment that the fuel rods do not experience any deformation significant to cause a change in the fuel geometry.
2. Provide testing data to demonstrate that the spent fuels (both low burnup and high burnup) in the package will be able to survive a 30 foot end-drop without any breaches in the cladding.
3. Revise the shielding analysis, if necessary, with consideration of source term redistribution caused by fuel assembly plastic deformation.

On page A.6.5.1-9 of the SAR, the applicant state: "The fuel assembly drop analyses documented in Chapter A.2, Section A.2.13.7 also demonstrate that the fuel rods do not experience any deformation significant to cause a change in the fuel geometry. Therefore, for both normal and hypothetical accident conditions the cask geometry is identical except for the neutron shield and skin." In addition, the LS-DYNA drop test analyses for TN-40 transportation package indicate that plastic deformation of fuel assemblies in the cask is a plausible effect of a 30 foot end drop. It is of particular concern for fuel burnup greater than 45 GWd/MTU. The staff requested justification for these assessments in RAI M8 and RAI ST-3. The applicant is requested to provide justification for the assertion that fuel rods do not experience any deformation significant to cause a change in the fuel geometry.

If fuel cladding fracture and/or fuel rod plastic deformation is identified as credible events, the applicant is requested to revise its shielding analysis for the TN MP197HB package with consideration of source concentration caused by fuel cladding breaches and/or fuel plastic deformation resulting from end-drop accident.

This information is needed for the staff to determine if the package design meets the regulatory requirements of 10 CFR 71.47 and 71.51.

Response to 5-16

The fuel assembly structural analyses documented in SAR Chapter A.2, Section A.2.13.7 demonstrate that the fuel cladding integrity is not breached following HAC. Further, these results also demonstrate that there will be no permanent plastic deformation. Therefore, for both the NCT and HAC calculations with intact fuel assemblies, there is no change in the material and geometry models of the fuel assemblies.

Damaged fuel assemblies are those that are essentially intact with additional cladding defects that will result in gross fuel assembly damage during HAC. Shielding evaluations are performed to evaluate the effect due to loading damaged fuel assemblies. SAR Chapter A.5 is revised to include the results of the shielding calculations with damaged fuel assemblies.

5-17 Explain the exact location of the package "perimeter."

In Table A.5-26, the applicant provides the maximum dose rates for the package under the Hypothetical Accident Conditions. One group of the dose rate data is labeled as dose rate at the "Package Perimeter." However, it is not clear what the exact location the term "Package Perimeter" is referring to. The applicant is requested to provide the exact definition for this group of dose rate data. A picture of the cask with the dose rate contour will be very helpful for this purpose.

This information is needed for the staff to determine if the package design meets the regulatory requirements of 10 CFR 71.47 and 71.51.

Response to 5-17

SAR Section A.5.4.1 is revised to provide the terminology for the dose rate locations that includes the "package side perimeter." A new figure (Figure A.5-16) is added to provide the additional clarification of these locations.

5-18 Pertinent to the response function method, provide:

1. Detailed information on the definition of the response function, including the mathematical formulation and analytical derivation of the equations.
2. Technical bases of this method, i.e., how and why this approach works.
3. Validation and verification of the method.
4. Or publications and references to demonstrate the validity of the methodology.

Through the Shielding Evaluation chapter, the applicant mentions in numerous places that "response function" is used in shielding calculation and fuel qualification. However, there is no definition provided for this method which seems to play a vital role in the shielding evaluation of this package design. It is not clear what the technical bases are for this approach and there is no reference provided for the validity of this method.

This information is needed for the staff to determine if the package design meets the regulatory requirements of 10 CFR 71.47.

Response to 5-18

This response is proprietary and is provided in Enclosure 3.

5-19 Provide explanation on how the source terms are calculated for fuel assemblies containing natural uranium blankets.
On page A.5-27, the applicant states: "There is no limit on a number of rods reconstituted with un-irradiated stainless steel or Zircaloy or low enriched (lower than of an original, un-reconstituted, FA), natural uranium, UO_2 or other non-fuel material." On page A.6.5.1-10 of the SAR, the applicant further states: "For intact fuel, the pins are modeled assuming a lattice average uniform enrichment everywhere in the lattice. Natural Uranium blankets, Gadolinia, Integral Fuel Burnable Absorber (IFBA), Erbia or any other burnable absorber rods, and axial or radial enrichment zones are modeled as

enriched Uranium uniform everywhere." However, it is not clear how the natural uranium blankets were treated in the source term calculations. Based on the staff's calculations using TRITON (a three dimensional sub-module of the SCALE 5.1 or newer version), natural uranium blankets may significantly affect the source terms. For fuel assemblies with 12 inches of natural uranium blankets, the source terms can be 10% higher than the source terms calculated based on average enrichment or neglecting the natural uranium blankets. The applicant is requested to recalculate the source terms for the fuel assemblies containing natural uranium and corresponding shielding analyses.
This information is needed for the staff to determine if the package design meets the regulatory requirements of 10 CFR 71.47 and 71.51.

Response to 5-19

A sensitivity calculation that determines the source terms for fuel assemblies with natural Uranium blankets and the effect on the dose rates for the MP197 HB cask is documented in SAR Section A.5.5.6.1. These results demonstrate that the source terms at the axial ends of the active fuel zone will increase significantly; however, the change in the dose rates at NCT is not significant enough to change the fuel qualification requirements.

5-20 Provide data and plots to demonstrate the validity of the decay heat calculation equations.
On pages A.5-29 and A.5-30, the applicant provides equations that are obtained via regression analyses for BWR and PWR fuel decay heat calculations. However, it seems to the staff that the regression plots are necessary to determine if these equations are valid and the validity ranges of these equations. The applicant is requested to provide data and plots to demonstrate the validity of the decay heat calculation equations.

This information is needed for the staff to determine if the package design meets the regulatory requirements of 10 CFR 71.43(g).

References:

1. NUREG/CR-6811, "Strategies for Application of Isotopic Uncertainties in Burnup Credit," Oak Ridge National Laboratory, 2002.
2. B. D. Murphy, "Prediction of the Isotopic Composition of UO_2 Fuel from a BWR: Analysis of the DU1 Sample from the Dodewaard Reactor," ORNL/TM-13687, Oak Ridge National Laboratory, October 1998.
3. O. W. Hermann and M. D. DeHart, "Validation of SCALE (SAS2H) Isotopic Predictions for BWR Spent Fuel," ORNL/TM-133315, Oak Ridge National Laboratory, September 1998.

Response to 5-20

The decay heat calculation is documented in a proprietary Transnuclear Calculation MP197HB-0503, Revision 1. The calculation package and the spreadsheet files are included in Enclosure 22 and Enclosure 9, respectively.

Criticality

6-1 Revise the application to address the transportation of fuel burned to more than 45 GWd/MTU in intact fuel locations within each basket design.

Several canister types to be transported in the NUHOMS® MP-197 are designed to transport high burnup spent fuel, which is considered to be fuel burned to greater than 45 GWd/MTU. It is not clear in the application that such fuel is limited to the damaged fuel positions in each canister design, which have been evaluated for potential fuel reconfiguration. The application should be revised to address materials and structural RAIs related to demonstrating that high burnup fuel remains intact under hypothetical accident conditions, or to evaluate high burnup fuel per the recommendations in Interim Staff Guidance 19 (ISG-19), "Moderator Exclusion under Hypothetical Accident Conditions and Demonstrating Subcriticality of Spent Fuel Under the Requirements of 10 CFR 71.55(e)." This ISG states that, in order to demonstrate subcriticality under §71.55(e), the applicant should either 1) perform a structural review to determine reconfigured fuel geometries, followed by a criticality evaluation of bounding reconfigured fuel geometries, or 2) demonstrate, via physical testing of the water exclusion boundary, that the package will not experience water inleakage during accident conditions. The application should be revised to include either of the two recommended approaches to demonstrating subcriticality of high burnup fuel under hypothetical accident conditions.

This information is required in order to ensure that the package will meet the criticality safety requirements of 10 CFR 71.55.

Response to 6-1

The intact fuel assembly structural analyses documented in SAR Chapter A.2 demonstrate that the fuel assemblies will retain their cladding integrity under HAC configurations. Further, these analyses also predict no plastic deformation of the fuel cladding following HAC in both the high and low burnup intact fuel assemblies.

Therefore, the criticality analyses documented in Appendices A.6.5.1 through A.6.5.7 remain unchanged. For the DSCs where burnup credit is employed in the criticality analyses, new loading curves are determined for intact fuel assemblies in response to RAI 6-7 and Proprietary RAI 6-6.

6-2 Revise the application to provide representative sample computer input files for the 24PT4 canister.

The application does not include a representative input file for the 24PT4 canister in the TN NUHOMS® MP-197 package. The application should include this input file, and the applicant should verify that representative input files are included for all canister designs to be transported in the package.

This information is required in order for the staff to ensure that the package will meet the criticality safety requirements of 10 CFR 71.55 and 71.59.

Response to 6-2

SAR Appendix A.6.5.3, Section A.6.5.3.8 is revised to include the sample computer input files for the 24PT4 canister. Further, representative input files are included for all the canister designs in SAR Appendices A.6.5.1 through A.6.5.7.

6-3 Revise the application to provide the most limiting fuel assembly parameters for the spent fuel assemblies to be transported in the TN NUHOMS® MP-197 package (e.g., max. fuel pellet OD, min. clad thickness, max. pitch - see table A.6-16).

The application includes only nominal values for the spent fuel designs considered in the criticality safety analysis. The application should be revised to identify bounding fuel assembly parameters, that will be listed in the Certificate of Compliance to identify the allowable contents of the package.

This information is required in order for the staff to ensure that the package will meet the criticality safety requirements of 10 CFR 71.55 and 71.59 when loaded with the contents described in the application.

Response to 6-3

The fuel assembly parameters shown in SAR Table A.6-16 include the nominal values for the three fuel assembly designs employed in the PWR burnup credit criticality calculations. In addition, the criticality analyses for both PWR and BWR fuel assemblies is performed using the most reactive fuel assembly design, ensuring that the results are conservatively applied to all fuel assembly designs. The BWR and PWR criticality calculations are performed using limiting rod design parameters, as applicable.

The listing of limiting fuel rod design parameters was discussed with the NRC staff. Currently, SAR Chapter A.1 Appendices include limiting fuel rod design parameters that are generally consistent with the Part 72 Technical Specifications for the DSCs that have been already licensed and loaded with fuel for storage. This also ensures that the certificate of compliance contains fuel assembly parameters that are directly verifiable by the licensee. The rod design parameters such as pitch, pellet diameter, etc., are considered beyond the level of detail of the certificate of compliance and they are difficult and in some cases not practical to verify to assure verbatim compliance to the CoC.

Therefore, only the most important limiting rod design parameters are identified for each fuel assembly design.

6-4 Revise the application to enlarge Figures A.6-2 through A.6-4, or expand them to present the same information on multiple graphs.

As presented in the application, the information presented in Figures A.6-2 through A.6-4 cannot be clearly identified. The applicant should consider enlarging the graphs so that individual lines can be distinguished, or divide up the information in each figure to be shown in multiple figures (e.g., five nuclides per figure).

This information is required in order for the staff to ensure that the package will meet the criticality safety requirements of 10 CFR 71.55 and 71.59.

Response to 6-4

SAR Figures A.6.2 and A.6.3 are expanded to present the same information on multiple graphs. SAR Figure A.6.4 containing the information for CE 14x14 fuel assembly is deleted since it will not be employed to determine loading curves (Please see the response to Proprietary RAI 6-4).

6-5 Revise the criticality evaluation in Section A.6 of the application to consider bounding damaged fuel configurations for canisters which are intended to transport damaged fuel.

Although the structural evaluation in Section A.2 demonstrates that intact fuel subject to the hypothetical accident conditions of 10 CFR 71.73 will not result in significant fuel reconfiguration (pending approval of the staff materials and structural reviewers), it is not clear that this evaluation applies for already damaged fuel. Additionally, it is not clear that the single- and double-ended rod shear configurations used in the damaged fuel evaluations for most canister designs adequately bound the possible reconfiguration of damaged fuel subject to §71.73 conditions. Since it is unclear what condition damaged fuel assemblies will be in prior to transport, the criticality evaluation should consider bounding reconfigurations that may increase reactivity. Bounding conditions may include, but are not limited to, rod pitch expansion, cladding loss, or removal of rods form the fuel lattice.

This information is required in order for the staff to ensure that the package will meet the criticality safety requirements of 10 CFR 71.55 and 71.59.

Response to 6-5

Currently, the application authorizes damaged fuel assemblies for transport in the 61BT / 61BTH / 69BTH / 24PT4 / 32PTH / 32PTH1/ 24PTH and 37PTH DSCs. The 32PT is not authorized for transportation of damaged fuel assemblies. Further, the definition of damaged fuel assemblies (provided in SAR Appendix A.1.4.1 through A.1.4.9, as applicable) is such that these fuel assemblies are essentially intact (handled by normal means).

The criticality analyses documented for the 61BT / 61BTH / 69BTH and 24PT4 DSCs employ the fresh fuel assumption. Further, the damaged fuel criticality evaluation for these DSCs considers the effect of fuel rod failure including single and double ended rod shear, fuel pitch variation that considers the rod pitch expansion including addition and removal of rods (missing rods) and migration of fuel rods beyond the poison. The cladding loss case is bounded by the rod pitch expansion, as documented in SAR Section A.6.5.3.4.2.B and Table A.6.5.3-17 of

Appendix A.6.5.3 for the 24PT4 DSC. The same conclusions are applicable for all other DSC types. Therefore, the damaged fuel evaluations documented for these DSCs in SAR Appendix A.6.5.1, SAR Appendix A.6.5.2 and SAR Appendix A.6.5.3 are adequately bounding.

The criticality analysis for damaged fuel assemblies for the 32PTH / 32PTH1/ 24PTH and 37PTH DSCs is revised to include the effect of modeling damaged fuel assemblies under NCT and HAC.

Bounding models for damaged assemblies include:

- *optimum rod pitch*
- *fuel assemblies with missing rods*

SAR Appendices A.6.5.4 (32PTH / 32PTH1), A.6.5.5 (24PTH) and A.6.5.7 (37PTH) are modified to provide separate loading curves for damaged fuel assemblies.

6-6 Revise the application to ensure that the possibility of active fuel not being covered by the canister basket neutron absorber panels is adequately considered.

For each canister design to be transported in the NUHOMS® MP-197 package, the applicant should provide a dimensional analysis to ensure that the active fuel is always covered by the canister neutron absorber panels, or provide a criticality evaluation of scenarios where the active fuel is uncovered to ensure the package remains adequately subcritical. This evaluation should be performed for any canister design that does not have neutron absorber panel extending the entire length of the canister interior. The evaluation should include the effects of fuel stack expansion resulting from irradiation, end hardware and plenum spring compression due to end drops under hypothetical accident conditions, and movement of the fuel relative to the basket.

This information is required in order for the staff to ensure that the package will meet the criticality safety requirements of 10 CFR 71.55 and 71.59 when loaded with the contents described in the application.

Response to 6-6

The poison plates for all the PWR DSCs (24PT4, 24PTH, 32PT, 32PTH, 32PTH1 and 37PTH) except the 32PTH DSC extend the full length of the basket. The poison plate height of the 32PTH DSC is 148.25" and adequately covers the active fuel height of 144". For the BWR DSCs (61BTH, 61BTH and 69BTH), the poison plates extend to a height of 156" and adequately covers the maximum active fuel height of 150" with at least 6" of natural uranium blankets at the top and bottom of the fuel assemblies.

For the PWR and BWR DSCs, the poison plates start at a height of 3.50" from the bottom of the basket. This non-poison height is covered by the height of the bottom nozzle and the spacer end plug regions at the bottom of the fuel assembly which are approximately 4" for PWR and 7" for BWR fuel assemblies. This ensures that the fixed poison in all the baskets adequately covers the active fuel region of the intact fuel assemblies under all conditions.

The definition of the damaged fuel assemblies described in SAR Appendices A.1.4.1 through A.1.4.9 (as applicable) requires that these fuel assemblies also contain the top and bottom end fittings or nozzles or tie plates (depending on the fuel type). This ensures adequate poison coverage for the damaged fuel assemblies over the active fuel region. The effect of irradiation growth, spring compression or basket-to-fuel relative movement is not expected to result in a configuration where there is no poison coverage on any face of the active fuel region of the intact or damaged fuel assemblies.

A dimensional analysis comparing the position and length of the fixed poison and the position and active fuel length of the PWR fuel assemblies (with burnup credit) is included in SAR Appendices A.6.5.4 through A.6.5.7.

6-7 Revise the application to credit no more than 40 years of cooling time in the burnup credit criticality evaluation.

Table A.1.4.2-7, which gives the minimum required burnup for various average initial enrichments of spent fuel, requires a minimum cooling time of 50 years for some enrichment/minimum burnup combinations. ISG-8 states that the licensing safety analysis for burnup credit criticality calculations should be based on cooling times from 1 to 40 years. The analysis should be revised to credit no more than 40 years of cooling time for all canister design which credit fuel burnup.

This information is required in order for the staff to ensure that the package will meet the criticality safety requirements of 10 CFR 71.55 and 71.59 when loaded with the contents described in the application.

Response to 6-7

Currently, the 50 year cooling time requirement is only employed for the 32PT DSC, whose burnup credit criticality analysis is documented in SAR Appendix A.6.5.6. This analysis is revised to credit no more than 40 years of cooling time. The loading curves in SAR Appendix A.1.4.2 are also revised for this purpose.

6-8 Revise the application to clarify how the assembly independence of the correction factors was confirmed.

Applicant simply states that the factors were within close numeric agreement. No information is provided as to the enrichment, burnup, or continued agreement with other assembly classes. Staff has assumed the applicant made this comparison at identical BE Ratio based on table A.6-11, however the presentation of the isotopic concentration ratios (Figures A.6-2, A.6-3, and A.6-4) is not adequate.

This information is required in order for the staff to ensure that the package will meet the criticality safety requirements of 10 CFR 71.55 and 71.59.

Response to 6-8

This response is proprietary and is provided in Enclosure 3.

6-9 EDITORIAL: Restate the description of the isotopic benchmark availability in section A.6.3.2.1 to accurately reflect the information presented in Table A.6-10.

This information is needed in order to meet the requirement of 10 CFR 71.7.

Response to 6-9

The text in SAR Section A.6.3.2.1 describing the number of isotopes covered by the experimental benchmarks is revised to more accurately reflect the information presented in SAR Table A.6-10.

Operating Procedures, Acceptance Criteria, and Maintenance Tests

7-1 Revise the operating procedures for the MP-197 to be stand-alone instructions for loading the variety of canisters requested for transportation and explain how canisters loaded under 10 CFR Part 72 adequately meet the loading requirements for transporting radioactive material.

The operating procedures refers the package user to apply selected portions of several storage FSARs and associated NRC technical specifications, with a variety of exceptions to some storage FSAR procedural steps. In addition, some of the amendments referenced for the storage FSARs and NRC technical specifications have not been approved or issued by NRC; and the storage FSAR vendor also has authority to change the storage FSARs under the provisions of 10 CFR 72.48. These factors may lead to error or confusion for MP-197 users in adequately preparing the MP-197 package for transport.

This information is needed in order for the staff to determine compliance with 10 CFR Part 71 (71.71 and 71.73).

Response to 7-1

The operating procedures contained in SAR Chapter A.7 are expanded by adding a separate appendix for each canister authorized for transport in the MP197HB (Appendices A.7.7.1 through A.7.7.10). Where possible, the canister-specific operations have been taken from existing Part 72 licensing documents. Procedures used for canisters that have not yet been licensed for storage reflect those contained in current licensing applications or are based on approved procedures for similar canisters.

Appendix A.7.7.10 describing operating procedures for the RWC is also added.

7-2 Include details of the drying and backfill operations in SAR Sec A.7.1.2.3. In SAR Section A.7.1.3.2, step 1, detail how the secondary RWC will be drained to ensure no free standing water remains.

Neither Amendment 11 to Part 72 CoC 1004 nor Amendment 1 to part 72 CoC 1030 has been issued as of the time of this correspondence. The criteria for draining operations must be included in the operating procedures to assure that water is not left in the canister, galvanic interactions do not take place, and there is an approved acceptance plan.

This information is needed to satisfy 10CFR71.43 (f).

Response to 7-2

As described in response to RAI 7-1 above, separate appendices to describe each type of canister operating procedure are added to Chapter A.7. Drying and backfill operations for each type of canister are included in the appendices.

The RWC operations are described in SAR Appendix A.7.7.10 which has been added to Chapter A.7 as discussed in the response to RAI 7-1. This appendix includes the steps necessary to dry and backfill the RWC, including an acceptance plan.

7-3 Add procedure for installing the shear key plug before the cask is installed and before the cask is placed on a horizontal position and secured on the platform. Add a requirement for examining the shear key plug material to ensure that the plug is made with the same neutron shielding material as that on the cask side.

Section A.5.3.1.1 of the SAR states that the shear key cut-out is closed with a steel shear key plug when the cask is on a transportation platform. Before the cask is placed on a horizontal position and secured on the platform, the shear key cut-out is closed with a plug made with the same neutron shielding material as that on the cask side.

Section A.7.1 of the SAR, the applicant lists operating procedures. However, it appears that the requirement for installing the shear key plug is missing from the operating procedures.

This information is needed for the staff to determine if the package design meets the regulatory requirements of 10 CFR 71.85.

Response to 7-3

The shear key plug is not installed before the cask is placed in a horizontal position and secured on the platform (e.g., before transport), and is not used during transport, because of the presence of the transport skid shear key, which serves to resist the longitudinal accelerations of the cask during transport.

To be more specific, in the transport configuration, the shear key, which is part of the transport skid, fills the space shown on section H-H and detail J of SAR drawing MP197HB-71-1005 sheet 1 (please see Figure 7-3.1 below).

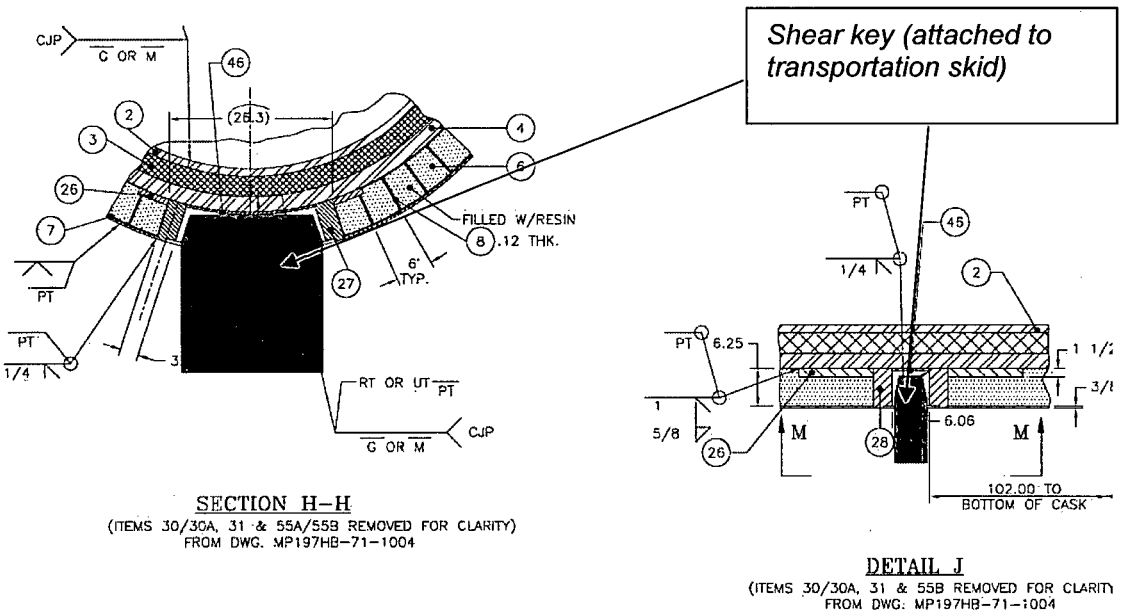

Figure 7-3.1

The shear key plug is only installed after the cask has been lifted from the skid and upended/rotated to a vertical position. Its purpose is to provide neutron shielding in the void that was previously filled by the shear key during transport.

SAR Chapter A.1, Appendix A.1.4.10 drawing MP197HB-71-1002 is revised to specify the same material as the rest of the cask neutron shield (Vyal B, item 6) for the shear key plug material (item 31). Therefore, a requirement for examining the shear key plug material to ensure that the plug is made with the same neutron shielding material as that on the cask side is unnecessary.

SAR Sections A.5.3.1.1, A.7.1.2, and A.7.1.2.1 are also revised to clarify the use of the shear key plug and the operational steps necessary for installation or removal.

7-4 Add dose rate survey requirements to the operating procedures.

Section A.7.1 of the SAR, the applicant lists operating procedures. However, it appears that radiological survey was missing from the procedures. The applicant is requested to review the operating procedures and add requirement for dose rate measurements. The results will also provide data for determining the TI for the placard of the package.

This information is needed for the staff to determine if the package design meets the regulatory requirements of 10 CFR 71.83 and 71.87.

Response to 7-4

SAR Sections A.7.1.2 and A.7.1.3 require final preparation of the cask for transport to be conducted following the procedures contained in Section A.7.1.4. Section A.7.1.4 directs that both surface contamination and external radiation surveys be taken to demonstrate compliance with requirements of 10CFR71.47 and 10CFR71.87.

ACCEPTANCE TESTS AND MAINTENANCE PROGRAM

8-1 Provide justification for why the uniformity of neutron shielding can be assured by installation process control.

10 CFR 71.85(c) states: "...the licensee shall determine that the packaging has been fabricated in accordance with the design approved by the Commission." NUREG-1609 suggests that "appropriate shielding tests are specified for both neutron and gamma radiation. The tests and acceptance criteria should be sufficient to assure that no voids or streaming paths exist in the shielding." Chapter 8 of the SAR describes tests for neutron shielding performance and states: "The shielding performance of the resin can be verified adequately by chemical analysis and verification of density. Uniformity is assured by installation process control." The description of the resin density and composition requirements and quality assurance program does not seem to be adequate for detecting manufacture defects, such as voids or streaming paths, in the neutron shield. The neutron shielding performance test described in Chapter 8 appears not be able to guarantee the neutron shielding compliant with the regulatory requirements. The applicant is requested to provide justification for why the uniformity of neutron shielding can be assured by installation process control. A revision of the acceptance test for neutron shielding may be needed.

This information is needed for the staff to determine if the package design meets the regulatory requirements of 10 CFR 71.85.

Response to 8-1

This response is proprietary and is provided in Enclosure 3.

8-2 Provide test results that can demonstrate that the neutron shield will not degrade over time.

On page A.8-8 of the SAR, the applicant states: "The material composition of the VYAL-B neutron shielding resin employed in the shielding calculations are based on minimum guaranteed values that are determined as a result of extensive tests under various (including extreme) environmental conditions. These tests indicate that the neutron shielding resin does not degrade under normal or off-normal conditions and is durable over extended periods of time." The applicant is requested to provide detailed description of the chemical composition and chemical properties of the neutron absorber materials and test data that can demonstrate that the VYAL-B will not degrade over the

extended period of time. A definition for the term "extended period of time" also will be helpful for the staff to assess the validation of the conclusion that the material will not degrade for the cask design life time.

This information is needed for the staff to determine if the package design meets the regulatory requirements of 10 CFR 71.85.

Response to 8-2

This response is proprietary and is provided in Enclosure 3.

Page and Drawing Change Instructions for the NUHOMS®-MP197 Safety Analysis Report Pages, Revision 7
(Non-Proprietary Version)

Chapter	Replacement Page #	Current Page(s) #
	SAR Cover page Rev. 7	SAR Cover page Rev. 6
7	7-1	7-1
7	7-3	7-3
7	7-16	7-16
	Appendix A Master TOC page 1~16	Appendix A Master TOC page 1~12
A.1	A.1-i	A.1-i
A.1	A.1-1	A.1-1
A.1	A.1-2	A.1-2
A.1	A.1-3	A.1-3
A.1	A.1-4	A.1-4
A.1	A.1-7	A.1-7
A.1	A.1-8	A.1-8
A.1	A.1-9	A.1-9
A.1	A.1-10	A.1-10
A.1	A.1-12	A.1-12
A.1.4.1	A.1.4.1-1	A.1.4.1-1
A.1.4.1	A.1.4.1-6	A.1.4.1-6
A.1.4.1	A.1.4.1-9	A.1.4.1-9
A.1.4.1	A.1.4.1-10	A.1.4.1-10
A.1.4.2	A.1.4.2-1	A.1.4.2-1
A.1.4.2	A.1.4.2-3	A.1.4.2-3
A.1.4.2	A.1.4.2-9	A.1.4.2-9
A.1.4.2	A.1.4.2-10	A.1.4.2-10
A.1.4.2	A.1.4.2-11	A.1.4.2-11
A.1.4.3	A.1.4.3-i	A.1.4.3-i
A.1.4.3	A.1.4.3-1	A.1.4.3-1
A.1.4.3	A.1.4.3-2	A.1.4.3-2
A.1.4.3	A.1.4.3-3	A.1.4.3-3
A.1.4.3	A.1.4.3-4	A.1.4.3-4
A.1.4.3	A.1.4.3-6	A.1.4.3-6
A.1.4.3	A.1.4.3-10	A.1.4.3-10
A.1.4.3	A.1.4.3-13	A.1.4.3-13
A.1.4.3	A.1.4.3-14	A.1.4.3-14
A.1.4.3	A.1.4.3-14A	None
A.1.4.3	A.1.4.3-14B	None
A.1.4.3	A.1.4.3-15	A.1.4.3-15
A.1.4.4	A.1.4.4-i	A.1.4.4-i
A.1.4.4	A.1.4.4-1	A.1.4.4-1
A.1.4.4	A.1.4.4-2	A.1.4.4-2
A.1.4.4	A.1.4.4-4	A.1.4.4-4
A.1.4.4	A.1.4.4-6	A.1.4.4-6
A.1.4.4	A.1.4.4-10	A.1.4.4-10
A.1.4.4	A.1.4.4-12	A.1.4.4-12
A.1.4.4	A.1.4.4-13	A.1.4.4-13
A.1.4.4	A.1.4.4-14	A.1.4.4-14

Page and Drawing Change Instructions for the NUHOMS®-MP197 Safety Analysis Report Pages, Revision 7
(Non-Proprietary Version)

Chapter	Replacement Page #	Current Page(s) #
A.1.4.5	A.1.4.5-i	A.1.4.5-i
A.1.4.5	A.1.4.5-1	A.1.4.5-1
A.1.4.5	A.1.4.5-2	A.1.4.5-2
A.1.4.5	A.1.4.5-4	A.1.4.5-4
A.1.4.5	A.1.4.5-6	A.1.4.5-6
A.1.4.5	A.1.4.5-10	A.1.4.5-10
A.1.4.5	A.1.4.5-13	A.1.4.5-13
A.1.4.5	A.1.4.5-14	A.1.4.5-14
A.1.4.5	A.1.4.5-15	A.1.4.5-15
A.1.4.5	A.1.4.5-15A	None
A.1.4.5	A.1.4.5-16	A.1.4.5-16
A.1.4.6	A.1.4.6-i	A.1.4.6-i
A.1.4.6	A.1.4.6-1	A.1.4.6-1
A.1.4.6	A.1.4.6-2	A.1.4.6-2
A.1.4.6	A.1.4.6-4	A.1.4.6-4
A.1.4.6	A.1.4.6-11	A.1.4.6-11
A.1.4.6	A.1.4.6-12	A.1.4.6-12
A.1.4.6	A.1.4.6-13	A.1.4.6-13
A.1.4.7	A.1.4.7-i	A.1.4.7-i
A.1.4.7	A.1.4.7-1	A.1.4.7-1
A.1.4.7	A.1.4.7-2	A.1.4.7-2
A.1.4.7	A.1.4.7-3	A.1.4.7-3
A.1.4.7	A.1.4.7-6	A.1.4.7-6
A.1.4.7	A.1.4.7-7	A.1.4.7-7
A.1.4.7	A.1.4.7-8	None
A.1.4.8	A.1.4.8-1	A.1.4.8-1
A.1.4.8	A.1.4.8-2	A.1.4.8-2
A.1.4.8	A.1.4.8-3	A.1.4.8-3
A.1.4.8	A.1.4.8-4	A.1.4.8-4
A.1.4.8	A.1.4.8-5	A.1.4.8-5
A.1.4.8	A.1.4.8-6	A.1.4.8-6
A.1.4.8	A.1.4.8-12	A.1.4.8-12
A.1.4.8	A.1.4.8-13	None
A.1.4.9	A.1.4.9-1	A.1.4.9-1
A.1.4.9	A.1.4.9-2	A.1.4.9-2
A.1.4.9	A.1.4.9-3	A.1.4.9-3
A.1.4.9	A.1.4.9-5	A.1.4.9-5
A.1.4.9	A.1.4.9-7	A.1.4.9-7
A.1.4.9	A.1.4.9-8	A.1.4.9-8
A.1.4.9A	A.1.4.9A-i	None
A.1.4.9A	A.1.4.9A-1	None
A.1.4.9A	A.1.4.9A-2	None
A.1.4.9A	A.1.4.9A-3	None
A.1.4.9A	A.1.4.9A-4	None
A.1.4.9A	A.1.4.9A-5	None

Page and Drawing Change Instructions for the NUHOMS®-MP197 Safety Analysis Report Pages, Revision 7
(Non-Proprietary Version)

Chapter	Replacement Page #	Current Page(s) #
A.1.4.10	A.1.4.10-i	A.1.4.10-i
A.1.4.10	A.1.4.10-1	A.1.4.10-1
A.1.4.10	A.1.4.10-2	A.1.4.10-2
A.1.4.10	A.1.4.10-3	A.1.4.10-3
A.1.4.10	A.1.4.10-4	A.1.4.10-4
A.1.4.10	A.1.4.10-5	A.1.4.10-5
A.1.4.10	A.1.4.10-6	A.1.4.10-6
A.1.4.10	MP197HB-71-1001 Rev 1 (sh 1-2)	MP197HB-71-1001 Rev 0 (sh 1-2)
A.1.4.10	MP197HB-71-1002 Rev 1 (sh 1-2)	MP197HB-71-1002 Rev 0 (sh 1-2)
A.1.4.10	MP197HB-71-1003 Rev 1 (sh 1)	MP197HB-71-1003 Rev 0 (sh 1)
A.1.4.10	MP197HB-71-1004 Rev 1 (sh 1)	MP197HB-71-1004 Rev 0 (sh 1)
A.1.4.10	MP197HB-71-1005 Rev 1 (sh 1-3)	MP197HB-71-1005 Rev 0 (sh 1-3)
A.1.4.10	MP197HB-71-1008 Rev 1 (sh 1)	MP197HB-71-1008 Rev 0 (sh 1)
A.1.4.10	MP197HB-71-1009 Rev 1 (sh 1)	MP197HB-71-1009 Rev 0 (sh 1)
A.1.4.10	NUH24PTH-71-1003 Rev 1 (sh 1-8)	NUH24PTH-71-1003 Rev 0 (sh 1-7)
A.1.4.10	A.1.4.10-113	A.1.4.10-112
A.1.4.10	NUH32PTH-71-1001 Rev 1 (sh 1)	NUH32PTH-71-1001 Rev 0 (sh 1)
A.1.4.10	NUH32PTH-71-1002 Rev 1 (sh1)	NUH32PTH-71-1002 Rev 0 (sh1)
A.1.4.10	NUH32PTH-71-1015 Rev 0 (sh 1)	New drawing
A.1.4.10	NUH32PTH TYPE 1-71-1001 Rev 1 (sh 1-4)	NUH32PTH TYPE 1-71-1001 Rev 0 (sh 1-5)
A.1.4.10	NUH32PTH TYPE 1-71-1003 Rev 1 (sh 1-7)	NUH32PTH TYPE 1-71-1003 Rev 0 (sh 1-7)
A.1.4.10	NUH32PTH TYPE 1-71-1004 Rev 1 (sh 1-4)	NUH32PTH TYPE 1-71-1004 Rev 0 (sh 1-7)
A.1.4.10	A.1.4.10-159	A.1.4.10-161
A.1.4.10	NUH32PTH1-71-1003 Rev 1 (sh 1-8)	NUH32PTH1-71-1003 Rev 0 (sh 1-7)
A.1.4.10	A.1.4.10-194	A.1.4.10-195
A.1.4.10	NUH37PTH-71-1001 Rev 1 (sh 1-4)	NUH37PTH-71-1001 Rev 0 (sh 1-4)
A.1.4.10	NUH37PTH-71-1002 Rev 1 (sh 1-5)	NUH37PTH-71-1002 Rev 0 (sh 1-5)
A.1.4.10	NUH37PTH-71-1003 Rev 1 (sh 1-4)	NUH37PTH-71-1003 Rev 0 (sh 1-4)
A.1.4.10	NUH37PTH-71-1004 Rev 1 (sh 1-6)	NUH37PTH-71-1004 Rev 0 (sh 1-6)
A.1.4.10	NUH37PTH-71-1011 Rev 1 (sh 1-7)	NUH37PTH-71-1011 Rev 0 (sh 1-7)
A.1.4.10	NUH37PTH-71-1012 Rev 1 (sh 1-7)	NUH37PTH-71-1012 Rev 0 (sh 1-7)
A.1.4.10	NUH37PTH-71-1015 Rev 0 (sh 1)	New drawing
A.1.4.10	NUH61BT-71-1001 Rev 1 (sh 1)	NUH61BT-71-1001 Rev 0 (sh 1)
A.1.4.10	NUH61BTH-71-1100 Rev 1 (sh 1-7)	NUH61BTH-71-1100 Rev 0 (sh 1-7)
A.1.4.10	NUH61BTH-71-1102 Rev 1 (sh 1-8)	NUH61BTH-71-1102 Rev 0 (sh 1-8)
A.1.4.10	NUH61BTH-71-1106 Rev 1 (sh 1-2)	NUH61BTH-71-1106 Rev 0 (sh 1-2)
A.1.4.10	NUH69BTH-71-1001 Rev 1 (sh 1-4)	NUH69BTH-71-1001 Rev 0 (sh 1-4)
A.1.4.10	NUH69BTH-71-1002 Rev 1 (sh 1-4)	NUH69BTH-71-1002 Rev 0 (sh 1-4)
A.1.4.10	NUH69BTH-71-1003 Rev 1 (sh 1-4)	NUH69BTH-71-1003 Rev 0 (sh 1-4)
A.1.4.10	NUH69BTH-71-1004 Rev 1 (sh 1-6)	NUH69BTH-71-1004 Rev 0 (sh 1-6)
A.1.4.10	NUH69BTH-71-1011 Rev 1 (sh 1-5)	NUH69BTH-71-1011 Rev 0 (sh 1-5)
A.1.4.10	NUH69BTH-71-1012 Rev 1 (sh 1-6)	NUH69BTH-71-1012 Rev 0 (sh 1-6)
A.1.4.10	NUH69BTH-71-1013 Rev 1 (sh 1-2)	NUH69BTH-71-1013 Rev 0 (sh 1-2)
A.1.4.10	NUH69BTH-71-1014 Rev 1 (sh 1)	NUH69BTH-71-1014 Rev 0 (sh 1)
A.1.4.10	NUH69BTH-71-1015 Rev 1 (sh 1)	NUH69BTH-71-1015 Rev 0 (sh 1)
A.1.4.10	A.1.4.10-308	None
A.1.4.10	NUHRWC-71-1001 Rev 0 (sh 1-5)	New drawing
A.1.4.10	NUHRWC-71-1002 Rev 0 (sh 1-3)	New drawing
A.1.4.10	NUHRWC-71-1003 Rev 0 (sh 1-4)	New drawing
A.2	A.2-4	A.2-4
A.2	A.2-5	A.2-5

Page and Drawing Change Instructions for the NUHOMS®-MP197 Safety Analysis Report Pages, Revision 7
(Non-Proprietary Version)

Chapter	Replacement Page #	Current Page(s) #
A.2	A.2-6	A.2-6
A.2	A.2-9	A.2-9
A.2	A.2-28	A.2-28
A.2	A.2-29	A.2-29
A.2	A.2-34	A.2-34
A.2	A.2-36	A.2-36
A.2	A.2-37	A.2-37
A.2	A.2-38	A.2-38
A.2	A.2-42	A.2-42
A.2	A.2-44	A.2-44
A.2.13.1	A.2.13.1-2	A.2.13.1-2
A.2.13.1	A.2.13.1-4	A.2.13.1-4
A.2.13.1	A.2.13.1-27	A.2.13.1-27
A.2.13.2	A.2.13.2-2	A.2.13.2-2
A.2.13.2	A.2.13.2-3	A.2.13.2-3
A.2.13.2	A.2.13.2-14	A.2.13.2-14
A.2.13.2	A.2.13.2-27	A.2.13.2-27
A.2.13.2	A.2.13.2-29	A.2.13.2-29
A.2.13.2	A.2.13.2-32	A.2.13.2-32
A.2.13.2	A.2.13.2-33	A.2.13.2-33
A.2.13.2	A.2.13.2-38	A.2.13.2-38
A.2.13.2	A.2.13.2-39	A.2.13.2-39
A.2.13.7	A.2.13.7-7	A.2.13.7-7
A.2.13.7	A.2.13.7-49	A.2.13.7-49
A.2.13.7	A.2.13.7-52	A.2.13.7-52
A.2.13.8	A.2.13.8-3	A.2.13.8-3
A.2.13.8	A.2.13.8-37	A.2.13.8-37
A.2.13.8	A.2.13.8-38	A.2.13.8-38
A.2.13.8	A.2.13.8-44	A.2.13.8-44
A.2.13.8	A.2.13.8-49	A.2.13.8-49
A.2.13.8	A.2.13.8-54	A.2.13.8-54
A.2.13.8	A.2.13.8-55	A.2.13.8-55
A.2.13.8	A.2.13.8-61	A.2.13.8-61
A.2.13.8	A.2.13.8-65	A.2.13.8-65
A.2.13.9	A.2.13.9-7	A.2.13.9-7
A.2.13.11	A.2.13.11-i	A.2.13.11-i, A.2.13.11-12, A.2.13.11-13
A.2.13.11	A.2.13.11-21	A.2.13.11-21~A.2.13.11-24
A.2.13.11	A.2.13.11-36	None
A.2.13.11	A.2.13.11-37	None
A.2.13.11	A.2.13.11-38	None
A.2.13.11	A.2.13.11-39	None
A.2.13.11	A.2.13.11-40	None
A.2.13.11	A.2.13.11-53	None
A.2.13.11	A.2.13.11-54	None
A.2.13.11	A.2.13.11-55	None
A.2.13.11	A.2.13.11-56	None

Page and Drawing Change Instructions for the NUHOMS®-MP197 Safety Analysis Report Pages, Revision 7
(Non-Proprietary Version)

Chapter	Replacement Page #	Current Page(s) #
A.2.13.11	A.2.13.11-57	None
A.2.13.11	A.2.13.11-58	None
A.2.13.11	A.2.13.11-59	None
A.2.13.11	A.2.13.11-60	None
A.2.13.11	A.2.13.11-61	None
A.2.13.11	A.2.13.11-62	None
A.2.13.11	A.2.13.11-63	None
A.2.13.11	A.2.13.11-64	None
A.2.13.12	A.2.13.12-ii	A.2.13.12-ii
A.2.13.12	A.2.13.12-iii	A.2.13.12-iii
A.2.13.12	A.2.13.12-2	A.2.13.12-2
A.2.13.12	A.2.13.12-3	A.2.13.12-3
A.2.13.12	A.2.13.12-5	A.2.13.12-5
A.2.13.12	A.2.13.12-6	A.2.13.12-6
A.2.13.12	A.2.13.12-7	A.2.13.12-7
A.2.13.12	A.2.13.12-9	A.2.13.12-9
A.2.13.12	A.2.13.12-10	A.2.13.12-10
A.2.13.12	A.2.13.12-11	A.2.13.12-11
A.2.13.12	A.2.13.12-12	A.2.13.12-12
A.2.13.12	A.2.13.12-13	A.2.13.12-13
A.2.13.12	A.2.13.12-14	A.2.13.12-14
A.2.13.12	A.2.13.12-18	A.2.13.12-18
A.2.13.12	A.2.13.12-19	A.2.13.12-19
A.2.13.12	A.2.13.12-29	A.2.13.12-29
A.2.13.12	A.2.13.12-30	A.2.13.12-30
A.2.13.12	A.2.13.12-31	A.2.13.12-31
A.2.13.12	A.2.13.12-32	A.2.13.12-32
A.2.13.12	A.2.13.12-33	A.2.13.12-33
A.2.13.12	A.2.13.12-40	A.2.13.12-40
A.2.13.12	A.2.13.12-41	A.2.13.12-41
A.2.13.12	A.2.13.12-42	A.2.13.12-42
A.2.13.12	A.2.13.12-43	A.2.13.12-43
A.2.13.12	A.2.13.12-44	A.2.13.12-44
A.2.13.12	A.2.13.12-47	A.2.13.12-47
A.2.13.12	A.2.13.12-50	A.2.13.12-50
A.2.13.12	A.2.13.12-51	A.2.13.12-51
A.2.13.12	A.2.13.12-54	A.2.13.12-54
A.2.13.12	A.2.13.12-55	A.2.13.12-55
A.2.13.12	A.2.13.12-56	A.2.13.12-56
A.2.13.12	A.2.13.12-57	A.2.13.12-57
A.2.13.12	A.2.13.12-58	A.2.13.12-58
A.2.13.12	A.2.13.12-59	A.2.13.12-59
A.2.13.12	A.2.13.12-60	A.2.13.12-60
A.2.13.12	A.2.13.12-61	A.2.13.12-61
A.2.13.12	A.2.13.12-62	A.2.13.12-62
A.2.13.12	A.2.13.12-63	A.2.13.12-63
A.2.13.12	A.2.13.12-64	A.2.13.12-64
A.2.13.12	A.2.13.12-65	A.2.13.12-65
A.2.13.12	A.2.13.12-66	A.2.13.12-66
A.2.13.12	A.2.13.12-67	A.2.13.12-67
A.2.13.12	A.2.13.12-68	A.2.13.12-68

Page and Drawing Change Instructions for the NUHOMS®-MP197 Safety Analysis Report Pages, Revision 7
(Non-Proprietary Version)

Chapter	Replacement Page #	Current Page(s) #
A.2.13.12	A.2.13.12-69	A.2.13.12-69
A.2.13.12	A.2.13.12-70	A.2.13.12-70
A.2.13.12	A.2.13.12-71	A.2.13.12-71
A.2.13.12	A.2.13.12-72	A.2.13.12-72
A.2.13.12	A.2.13.12-73	A.2.13.12-73
A.2.13.12	A.2.13.12-74	A.2.13.12-74
A.2.13.12	A.2.13.12-75	A.2.13.12-75
A.2.13.12	A.2.13.12-76	A.2.13.12-76
A.2.13.12	A.2.13.12-77	A.2.13.12-77
A.2.13.12	A.2.13.12-78	A.2.13.12-78
A.2.13.12	A.2.13.12-79	A.2.13.12-79
A.2.13.12	A.2.13.12-80	A.2.13.12-80
A.2.13.12	A.2.13.12-81	A.2.13.12-81
A.2.13.12	A.2.13.12-83	A.2.13.12-83
A.2.13.12	A.2.13.12-84	A.2.13.12-84
A.2.13.12	A.2.13.12-85	A.2.13.12-85
A.2.13.12	A.2.13.12-86	A.2.13.12-86
A.2.13.12	A.2.13.12-87	A.2.13.12-87
A.2.13.12	A.2.13.12-88	A.2.13.12-88
A.2.13.12	A.2.13.12-91	None
A.2.13.12	A.2.13.12-92	None
A.2.13.12	A.2.13.12-93	None
A.2.13.12	A.2.13.12-94	None
A.2.13.12	A.2.13.12-95	None
A.2.13.12	A.2.13.12-96	None
A.2.13.12	A.2.13.12-97	None
A.2.13.12	A.2.13.12-98	None
A.2.13.12	A.2.13.12-99	None
A.2.13.12	A.2.13.12-100	None
A.2.13.12	A.2.13.12-101	None
A.2.13.13	A.2.13.13-2	A.2.13.13-2
A.2.13.13	A.2.13.13-3	A.2.13.13-3
A.2.13.13	A.2.13.13-3A	None
A.3	A.3-i	A.3-i
A.3	A.3-iv	A.3-iv
A.3	A.3-4	A.3-4
A.3	A.3-8	A.3-8
A.3	A.3-9	A.3-9
A.3	A.3-10	A.3-10
A.3	A.3-12	A.3-12
A.3	A.3-13	A.3-13
A.3	A.3-19	A.3-19
A.3	A.3-28	A.3-28
A.3	A.3-38	A.3-38
A.3	A.3-40	A.3-40
A.3	A.3-40a	None
A.3	A.3-40b	None
A.3	A.3-40c	None
A.3	A.3-40d	None
A.3	A.3-40e	None

Page and Drawing Change Instructions for the NUHOMS®-MP197 Safety Analysis Report Pages, Revision 7
(Non-Proprietary Version)

Chapter	Replacement Page #	Current Page(s) #
A.3	A.3-47	A.3-47
A.3	A.3-48	A.3-48
A.3	A.3-48a	None
A.3	A.3-68	A.3-68
A.3	A.3-75	A.3-75
A.3	A.3-78	A.3-78
A.3	A.3-79	A.3-79
A.3	A.3-80	A.3-80
A.3	A.3-82	A.3-82
A.3	A.3-92	A.3-92
A.3	A.3-93	A.3-93
A.3	A.3-95	A.3-95
A.3	A.3-97	A.3-97~A.3-102
A.3	A.3-104a	None
A.3	A.3-105	A.3-105
A.3	A.3-120	A.3-120
A.3	A.3-127	A.3-127
A.3	A.3-128	A.3-128
A.3	A.3-139c	None
A.3	A.3-139d	None
A.3	A.3-139e	None
A.3	A.3-139f	None
A.3	A.3-140	A.3-140
A.3	A.3-149	A.3-149
A.3	A.3-150	A.3-150
A.3	A.3-157	A.3-157
A.3	A.3-161	A.3-161
A.3	A.3-162	A.3-162
A.3	A.3-216	None
A.3	A.3-217	None
A.3	A.3-218	None
A.4	A.4-1	A.4-1
A.4	A.4-3	A.4-3
A.4	A.4-5	A.4-5
A.4	A.4-6	A.4-6
A.5	A.5-i	A.5-i
A.5	A.5-ii	A.5-ii
A.5	A.5-iii	A.5-iii
A.5	A.5-1	A.5-1
A.5	A.5-3	A.5-3
A.5	A.5-4	A.5-3a
A.5	A.5-4a	A.5-3b
A.5	A.5-4b	A.5-4
A.5	A.5-4c	None
A.5	A.5-6	A.5-6
A.5	A.5-7	A.5-7
A.5	A.5-7a	None
A.5	A.5-9	A.5-9
A.5	A.5-10	A.5-10
A.5	A.5-11	A.5-11

Page and Drawing Change Instructions for the NUHOMS®-MP197 Safety Analysis Report Pages, Revision 7
(Non-Proprietary Version)

Chapter	Replacement Page #	Current Page(s) #
A.5	A.5-12	A.5-12
A.5	A.5-13	A.5-13
A.5	A.5-14	A.5-14
A.5	A.5-14a	None
A.5	A.5-16	A.5-16
A.5	A.5-19	A.5-19
A.5	A.5-20	A.5-20
A.5	A.5-21	A.5-21
A.5	A.5-21a	None
A.5	A.5-23	A.5-23
A.5	A.5-33	A.5-33, A.5-34
A.5	A.5-34b	None
A.5	A.5-34c	None
A.5	A.5-36	A.5-36
A.5	A.5-106	A.5-106
A.5	A.5-106a	None
A.5	A.5-106b	None
A.5	A.5-108	A.5-108
A.5	A.5-111	A.5-111
A.5	A.5-115a	None
A.5	A.5-119	A.5-119
A.5	A.5-120	A.5-120
A.5	A.5-128	A.5-128
A.5	A.5-131	A.5-131
A.5	A.5-133	A.5-133
A.5	A.5-133a	None
A.5	A.5-139a	None
A.5	A.5-139b	None
A.5	A.5-139c	None
A.5	A.5-149	None
A.6	A.6-i	A.6-i
A.6	A.6-ii	A.6-ii
A.6	A.6-1	A.6-1
A.6	A.6-2	A.6-2
A.6	A.6-4	A.6-4~A.6-12
A.6	A.6-14	A.6-14~A.6-20, A.6-20a, A.6-21~A.6-29
A.6	A.6-30	A.6-30
A.6	A.6-31	A.6-31
A.6	A.6-32	A.6-32~A.6-38
A.6	A.6-42	A.6-42
A.6	A.6-44	A.6-44~A.6-61
A.6	A.6-65	A.6-65
A.6	A.6-66	A.6-66
A.6	A.6-67	A.6-67, A.6-68
A.6	A.6-69	A.6-69
A.6	A.6-70	A.6-70~A.6-94
A.6	A.6-95	A.6-95
A.6	A.6-96	None
A.6.5.1	A.6.5.1-i	A.6.5.1-i
A.6.5.1	A.6.5.1-1	A.6.5.1-1

Page and Drawing Change Instructions for the NUHOMS®-MP197 Safety Analysis Report Pages, Revision 7
(Non-Proprietary Version)

Chapter	Replacement Page #	Current Page(s) #
A.6.5.1	A.6.5.1-7	A.6.5.1-7
A.6.5.1	A.6.5.1-28	A.6.5.1-28
A.6.5.1	A.6.5.1-30	A.6.5.1-30~A.6.5.1-57
A.6.5.2	A.6.5.2-ii	A.6.5.2-ii
A.6.5.2	A.6.5.2-3	A.6.5.2-3
A.6.5.2	A.6.5.2-4	A.6.5.2-4
A.6.5.2	A.6.5.2-5	A.6.5.2-5
A.6.5.2	A.6.5.2-6	A.6.5.2-6
A.6.5.2	A.6.5.2-7	A.6.5.2-7
A.6.5.2	A.6.5.2-8	A.6.5.2-8
A.6.5.2	A.6.5.2-11	A.6.5.2-11
A.6.5.2	A.6.5.2-12	A.6.5.2-12
A.6.5.2	A.6.5.2-14	A.6.5.2-14
A.6.5.2	A.6.5.2-15	A.6.5.2-15
A.6.5.2	A.6.5.2-16	A.6.5.2-16
A.6.5.2	A.6.5.2-17	A.6.5.2-17
A.6.5.2	A.6.5.2-18	A.6.5.2-18
A.6.5.2	A.6.5.2-19	A.6.5.2-19
A.6.5.2	A.6.5.2-20	A.6.5.2-20
A.6.5.2	A.6.5.2-21	A.6.5.2-21
A.6.5.2	A.6.5.2-22	A.6.5.2-22~A.6.5.2-63
A.6.5.2	A.6.5.2-64	A.6.5.2-64
A.6.5.2	A.6.5.2-70	A.6.5.2-70
A.6.5.2	A.6.5.2-72	A.6.5.2-72
A.6.5.2	A.6.5.2-76	A.6.5.2-76
A.6.5.2	A.6.5.2-77	A.6.5.2-77
A.6.5.2	A.6.5.2-78	A.6.5.2-78
A.6.5.2	A.6.5.2-79	A.6.5.2-79
A.6.5.2	A.6.5.2-80	A.6.5.2-80
A.6.5.2	A.6.5.2-81	A.6.5.2-81
A.6.5.2	A.6.5.2-82	A.6.5.2-82
A.6.5.2	A.6.5.2-83	A.6.5.2-83
A.6.5.2	A.6.5.2-84	A.6.5.2-84
A.6.5.2	A.6.5.2-85	A.6.5.2-85
A.6.5.2	A.6.5.2-90	A.6.5.2-90
A.6.5.2	A.6.5.2-96	A.6.5.2-96
A.6.5.2	A.6.5.2-97	A.6.5.2-97
A.6.5.2	A.6.5.2-98	A.6.5.2-98
A.6.5.2	A.6.5.2-99	A.6.5.2-99
A.6.5.2	A.6.5.2-103	A.6.5.2-103
A.6.5.2	A.6.5.2-105	A.6.5.2-105
A.6.5.2	A.6.5.2-108	A.6.5.2-108
A.6.5.2	A.6.5.2-109	A.6.5.2-109
A.6.5.2	A.6.5.2-113	A.6.5.2-113
A.6.5.2	A.6.5.2-114	A.6.5.2-114
A.6.5.2	A.6.5.2-115	A.6.5.2-115
A.6.5.2	A.6.5.2-124	A.6.5.2-124
A.6.5.2	A.6.5.2-125	A.6.5.2-125
A.6.5.2	A.6.5.2-126	A.6.5.2-126
A.6.5.3	A.6.5.3-i	A.6.5.3-i

Page and Drawing Change Instructions for the NUHOMS®-MP197 Safety Analysis Report Pages, Revision 7
(Non-Proprietary Version)

Chapter	Replacement Page #	Current Page(s) #
A.6.5.3	A.6.5.3-9	A.6.5.3-9
A.6.5.3	A.6.5.3-24	A.6.5.3-24
A.6.5.4	A.6.5.4-i	A.6.5.4-i
A.6.5.4	A.6.5.4-ii	A.6.5.4-ii
A.6.5.4	A.6.5.4-2	A.6.5.4-2
A.6.5.4	A.6.5.4-4	A.6.5.4-4~A.6.5.4-16
A.6.5.4	A.6.5.4.17	A.6.5.4-17
A.6.5.4	A.6.5.4-18	A.6.5.4-18~A.6.5.4-32
A.6.5.4	A.6.5.4-39	A.6.5.4-39~40
A.6.5.4	A.6.5.4-42	A.6.5.4-42~A.6.5.4-65
A.6.5.4	A.6.5.4-68	A.6.5.4-68
A.6.5.4	A.6.5.4-69	A.6.5.4-69
A.6.5.4	A.6.5.4-71	A.6.5.4-71
A.6.5.4	A.6.5.4-73	A.6.5.4-73
A.6.5.4	A.6.5.4-74	A.6.5.4-74
A.6.5.5	A.6.5.5-i	A.6.5.5-i
A.6.5.5	A.6.5.5-ii	A.6.5.5-ii
A.6.5.5	A.6.5.5-1	A.6.5.5-1
A.6.5.5	A.6.5.5-2	A.6.5.5-2
A.6.5.5	A.6.5.5-4	A.6.5.5-4~A.6.5.5-16
A.6.5.5	A.6.5.5-17	A.6.5.5-17
A.6.5.5	A.6.5.5-18	A.6.5.5-18~34
A.6.5.5	A.6.5.5-35	A.6.5.5-35
A.6.5.5	A.6.5.5-37	A.6.5.5-37~A.6.5.5-39
A.6.5.5	A.6.5.5-41	A.6.5.5-41~A.6.5.5-52
A.6.5.5	A.6.5.5-56	A.6.5.5-56
A.6.5.5	A.6.5.5-57	A.6.5.5-57
A.6.5.5	A.6.5.5-60	A.6.5.5-60
A.6.5.5	A.6.5.5-62	A.6.5.5-62
A.6.5.5	A.6.5.5-63	A.6.5.5-63
A.6.5.6	A.6.5.6-i	A.6.5.6-i
A.6.5.6	A.6.5.6-ii	A.6.5.6-ii
A.6.5.6	A.6.5.6-2	A.6.5.6-2
A.6.5.6	A.6.5.6-5	A.6.5.6-5~A.6.5.6-13
A.6.5.6	A.6.5.6-14	A.6.5.6-14
A.6.5.6	A.6.5.6-15	A.6.5.6-15~A.6.5.6-24
A.6.5.6	A.6.5.6-27	A.6.5.6-27, A.6.5.6-28
A.6.5.6	A.6.5.6-30	A.6.5.6-30~A.6.5.6-45
A.6.5.6	A.6.5.6-46	A.6.5.6-46~A.6.5.6-56
A.6.5.6	A.6.5.6-62	A.6.5.6-62
A.6.5.6	A.6.5.6-63	A.6.5.6-63
A.6.5.6	A.6.5.6-67	A.6.5.6-67
A.6.5.6	A.6.5.6-70	A.6.5.6-70
A.6.5.6	A.6.5.6-71	A.6.5.6-71
A.6.5.7	A.6.5.7-i	A.6.5.7-i
A.6.5.7	A.6.5.7-ii	A.6.5.7-ii
A.6.5.7	A.6.5.7-iii	A.6.5.7-iii
A.6.5.7	A.6.5.7-2	A.6.5.7-2

Page and Drawing Change Instructions for the NUHOMS®-MP197 Safety Analysis Report Pages, Revision 7
(Non-Proprietary Version)

Chapter	Replacement Page #	Current Page(s) #
A.6.5.7	A.6.5.7-4	A.6.5.7-4~A.6.5.7-15
A.6.5.7	A.6.5.7-16	A.6.5.7-16
A.6.5.7	A.6.5.7-17	A.6.5.7-17~A.6.5.7-28
A.6.5.7	A.6.5.7-30	A.6.5.7-30
A.6.5.7	A.6.5.7-31	A.6.5.7-31, A.6.5.7-32
A.6.5.7	A.6.5.7-34	A.6.5.7-34~A.6.5.7-38
A.6.5.7	A.6.5.7-40	A.6.5.7-40~A.6.5.7-44
A.6.5.7	A.6.5.7-47	A.6.5.7-47
A.6.5.7	A.6.5.7-48	A.6.5.7-48
A.6.5.7	A.6.5.7-53	A.6.5.7-53
A.6.5.7	A.6.5.7-54	A.6.5.7-54
	A.7-i	A.7-i
	A.7-1 ~ A.7-21	A.7-1 ~ A.7-28
	A.7-22	A.7-29
	A.7-23	A.7-30
A.7.7.1	A.7.7.1-i	None
A.7.7.1	A.7.7.1-1~A.7.7.1-8	None
A.7.7.2	A.7.7.2-i	None
A.7.7.2	A.7.7.2-1~A.7.7.2-8	None
A.7.7.3	A.7.7.3-i	None
A.7.7.3	A.7.7.3-1~A.7.7.3-9	None
A.7.7.4	A.7.7.4-i	None
A.7.7.4	A.7.7.4-1~A.7.7.4-9	None
A.7.7.5	A.7.7.5-i	None
A.7.7.5	A.7.7.5-1~A.7.7.5-9	None
A.7.7.6	A.7.7.6-i	None
A.7.7.6	A.7.7.6-1~A.7.7.6-9	None
A.7.7.7	A.7.7.7-i	None
A.7.7.7	A.7.7.7-1~A.7.7.7-8	None
A.7.7.8	A.7.7.8-i	None
A.7.7.8	A.7.7.8-1~A.7.7.8-9	None
A.7.7.9	A.7.7.9-i	None
A.7.7.9	A.7.7.9-1~A.7.7.9-8	None
A.7.7.10	A.7.7.10-i	None
A.7.7.10	A.7.7.10-1~A.7.7.10-3	None
A.8	A.8-i	A.8-i
A.8	A.8-2~A.8-18	A.8-2~A.8-10