Westinghouse

Westinghouse Electric Company
Nuclear Power Plants
P.O. Box 355
Pittsburgh, Pennsylvania 15230-0355
USA

U.S. Nuclear Regulatory Commission
ATTENTION: Document Control Desk
Washington, D.C. 20555

Direct tel: 412-374-6206
Direct fax: 724-940-8505
e-mail: sisk1rb@westinghouse.com

Your ref: Docket Number 52-006
Our ref: DCP_NRC_002863

May 10, 2010

References:

1. DCP_NRC_002744, Re-submittal of Proposed Changes for AP1000 Design Control Document Rev.18, January 20, 2010
2. DCP_NRC_002818, Supplementary Information to DCP_NRC_002744 – Re-Submittal of Proposed Changes for AP1000 Design Control Document Rev.18, March 12, 2010
3. DCP_NRC_002850, Final Information on Proposed Changes for the AP1000 Design Control Document Rev. 18, April 26, 2010

Subject: Information on Proposed Changes for the AP1000 Design Control Document Rev. 18

This letter is submitted in support of the AP1000 Design Certification Amendment Application (Docket No. 52-006). The information provided is generic and is expected to apply to all Combined License (COL) applicants referencing the AP1000 Design Certification and the AP1000 Design Certification Amendment Application.

This submittal contains proprietary information of Westinghouse Electric Company, LLC. In conformance with the requirements of 10 CFR Section 2.390, as amended, of the Commission's regulations, we are enclosing with this submittal one copy of the Application for Withholding, AW-10-2811 (non-proprietary, Enclosure 1), and one copy of the associated Affidavit (non-proprietary, Enclosure 2) with Proprietary Information and Copyright Notices. The affidavit sets forth the basis on which the information identified as proprietary may be withheld from public disclosure by the Commission. Pursuant to 10 CFR 50.30(b), "Description of Proposed Changes for AP1000 DCD Rev. 18 – Proprietary" and "Description of Proposed Changes for AP1000 DCD Rev. 18 – Non-Proprietary" are submitted as Enclosures 3 and 4. Correspondence with respect to the affidavit or Application for Withholding should include our reference number AW-10-2811 and should be addressed to James A. Gresham, Manager, Regulatory Compliance and Plant Licensing, Westinghouse Electric Company, LLC, P. 0. Box 355, Pittsburgh, Pennsylvania 15230-0355.

Westinghouse provided preliminary information on changes which it proposed to include in Revision 18 of the AP1000 Design Control Document (DCD-18) in a January 20, 2010 letter (Reference 1). Supplementary information on some of those changes requested by the NRC was provided in a March 12, 2010 letter (Reference 2). Final information was provided in an April 26, 2010 letter (Reference 3) for seven of the changes identified in the January 20, 2010 that were determined to meet one or more of the Interim Staff Guidance-11 (ISG-11) criteria for reporting to the NRC staff. It is expected that none of the remaining changes in the January 20, 2010 letter meet the ISG-11 criteria. However, if it is determined

D063
NRO

that any of them meet the ISG-11 criteria, the NRC will be notified promptly. The purpose of this letter is to provide information on seven additional design changes that are necessary to support the AP1000 Licensing Finalization (ALF) schedule, should be included in DCD-18 and which have been determined to meet one or more of the ISG-11 criteria.

These seven new design changes are identified as Change Notices (CNs) 58, 59, 60, 61, 62, 63, and 65. Information on CN64 will be provided in a future letter. These CNs are described in Enclosure 3, including the reasons for the changes and the sections of the DCD which are impacted. For some of the CNs there may be editorial changes made to the affected DCD pages which do not impact the conclusion of the ISG-11 evaluation and are, therefore, not specifically discussed. Enclosure 4 provides a non-proprietary version of the information in Enclosure 3. Enclosure 5 provides a copy of the revised DCD pages for all CNs except 59. In some cases, the affected DCD pages contain changes not related to the specific CN. In these cases, the changes resulting from the CN are noted with a bubble marking.

Enclosure 6 contains the DCD pages for CN59 which contain sensitive unclassified non-safeguards information relative to the physical protection of an AP1000 Nuclear Power Plant that should be withheld from public disclosure pursuant to 10 CFR 2.390(d). Enclosure 7 provides the redacted version (public version).

As noted previously, the changes described in this and the referenced letters do not constitute all of the changes which Westinghouse proposes to include in DCD-18. Rather, the changes in this letter are in addition to those which Westinghouse either has submitted or will submit to the NRC as responses to Requests for Additional Information or Safety Evaluation Report Open Items.

Westinghouse will work with the NRC staff to disposition the changes described in this letter as expeditiously as possible. Questions related to the content of this letter should be directed to Westinghouse. Please send copies of such questions to the prospective COL applicants referencing the AP1000 Design Certification. A representative for each applicant is included on the cc: list of this letter.

Very truly yours,

Robert Sisk, Manager
Licensing and Customer Interface
Regulatory Affairs and Strategy

/Enclosures

1. AW-10-2811, Application for Withholding Proprietary Information from Disclosure, dated May 10, 2010
2. AW-10-2811, Affidavit, Proprietary Information Notice, Copyright Notice dated May 10, 2010
3. Description of Proposed Changes for AP1000 DCD Rev. 18, Proprietary
4. Description of Proposed Changes for AP1000 DCD Rev. 18, Non-Proprietary
5. DCD Pages for all CNs Except 59
6. DCD Pages for CN59 - Security Related Information Withheld from Public
7. DCD Pages for CN59 – Public Redacted Version

cc:	D. Jaffe	-	U.S. NRC	5E
	E. McKenna	-	U.S. NRC	5E
	T. Spink	-	TVA	5E
	P. Hastings	-	Duke Power	5E
	R. Kitchen	-	Progress Energy	5E
	A. Monroe	-	SCANA	5E
	P. Jacobs	-	Florida Power & Light	5E
	C. Pierce	-	Southern Company	5E
	E. Schmiech	-	Westinghouse	5E
	G. Zinke	-	NuStart/Entergy	5E
	R. Grumbir	-	NuStart	5E
	M. Melton	-	Westinghouse	5E

ENCLOSURE 1

AW-10-2811

APPLICATION FOR WITHHOLDING
PROPRIETARY INFORMATION FROM DISCLOSURE

Westinghouse

Westinghouse Electric Company
Nuclear Services
P.O. Box 355
Pittsburgh, Pennsylvania 15230-0355
USA

U.S. Nuclear Regulatory Commission
ATTENTION: Document Control Desk
Washington, D.C. 20555

Direct tel: 412-374-6206
Direct fax: 412-374-5005
e-mail: sisk1rb@westinghouse.com

Your ref: Docket Number 52-006
Our ref: AW-10-2811

May 10, 2010

APPLICATION FOR WITHHOLDING PROPRIETARY
INFORMATION FROM PUBLIC DISCLOSURE

Subject: Information on Proposed Changes for the AP1000 Design Control Document Rev. 18

The Application for Withholding is submitted by Westinghouse Electric Company, LLC (Westinghouse), pursuant to the provisions of Paragraph (b) (1) of Section 2.390 of the Commission's regulations. It contains commercial strategic information proprietary to Westinghouse and customarily held in confidence.

The proprietary material for which withholding is being requested is identified in the proprietary version of the subject report. In conformance with 10 CFR Section 2.390, Affidavit AW-10-2811 accompanies this Application for Withholding, setting forth the basis on which the identified proprietary information may be withheld from public disclosure.

Accordingly, it is respectively requested that the subject information which is proprietary to Westinghouse be withheld from public disclosure in accordance with 10 CFR Section 2.390 of the Commission's regulations.

Correspondence with respect to this Application for Withholding or the accompanying affidavit should reference AW-10-2811 and should be addressed to James A. Gresham, Manager, Regulatory Compliance and Plant Licensing, Westinghouse Electric Company, LLC, P.O. Box 355, Pittsburgh, Pennsylvania, 15230-0355.

Very truly yours,

Robert B. Sisk
Manager
Licensing and Customer Interface

cc: G. Bacuta - U.S. NRC

0516ljb.doc

ENCLOSURE 2

Affidavit

AW-10-2811
May 10, 2010

AFFIDAVIT

COMMONWEALTH OF PENNSYLVANIA:

ss

COUNTY OF BUTLER:

Before me, the undersigned authority, personally appeared Robert B. Sisk, who, being by me duly sworn according to law, deposes and says that he is authorized to execute this Affidavit on behalf of Westinghouse Electric Company LLC (Westinghouse), and that the averments of fact set forth in this Affidavit are true and correct to the best of his knowledge, information, and belief:

Robert B. Sisk
Manager
Licensing and Customer Interface

Sworn to and subscribed
before me this 10th day
of May 2010.

COMMONWEALTH OF PENNSYLVANIA
Notarial Seal
Linda J. Bugle, Notary Public
City of Pittsburgh, Allegheny County
My Commission Expires June 18, 2013
Member, Pennsylvania Association of Notaries

Notary Public

0516ljb.doc

(1) I am Manager, Licensing and Customer Interface, Westinghouse Electric Company, LLC (Westinghouse), and as such, I have been specifically delegated the function of reviewing the proprietary information sought to be withheld from public disclosure in connection with nuclear power plant licensing and rule making proceedings, and am authorized to apply for its withholding on behalf of Westinghouse.

(2) I am making this Affidavit in conformance with the provisions of 10 CFR Section 2.390 of the Commission's regulations and in conjunction with the Westinghouse "Application for Withholding" accompanying this Affidavit.

(3) I have personal knowledge of the criteria and procedures utilized by Westinghouse in designating information as a trade secret, privileged or as confidential commercial or financial information.

(4) Pursuant to the provisions of paragraph (b)(4) of Section 2.390 of the Commission's regulations, the following is furnished for consideration by the Commission in determining whether the information sought to be withheld from public disclosure should be withheld.

(i) The information sought to be withheld from public disclosure is owned and has been held in confidence by Westinghouse.

(ii) The information is of a type customarily held in confidence by Westinghouse and not customarily disclosed to the public. Westinghouse has a rational basis for determining the types of information customarily held in confidence by it and, in that connection, utilizes a system to determine when and whether to hold certain types of information in confidence. The application of that system and the substance of that system constitutes Westinghouse policy and provides the rational basis required.

Under that system, information is held in confidence if it falls in one or more of several types, the release of which might result in the loss of an existing or potential competitive advantage, as follows:

(a) The information reveals the distinguishing aspects of a process (or component, structure, tool, method, etc.) where prevention of its use by any of Westinghouse's competitors without license from Westinghouse constitutes a competitive economic advantage over other companies.

(b) It consists of supporting data, including test data, relative to a process (or component, structure, tool, method, etc.), the application of which data secures a competitive economic advantage, e.g., by optimization or improved marketability.

(c) Its use by a competitor would reduce his expenditure of resources or improve his competitive position in the design, manufacture, shipment, installation, assurance of quality, or licensing a similar product.

(d) It reveals cost or price information, production capacities, budget levels, or commercial strategies of Westinghouse, its customers or suppliers.

(e) It reveals aspects of past, present, or future Westinghouse or customer funded development plans and programs of potential commercial value to Westinghouse.

(f) It contains patentable ideas, for which patent protection may be desirable.

There are sound policy reasons behind the Westinghouse system which include the following:

(a) The use of such information by Westinghouse gives Westinghouse a competitive advantage over its competitors. It is, therefore, withheld from disclosure to protect the Westinghouse competitive position.

(b) It is information that is marketable in many ways. The extent to which such information is available to competitors diminishes the Westinghouse ability to sell products and services involving the use of the information.

(c) Use by our competitor would put Westinghouse at a competitive disadvantage by reducing his expenditure of resources at our expense.

(d) Each component of proprietary information pertinent to a particular competitive advantage is potentially as valuable as the total competitive advantage. If competitors acquire components of proprietary information, any one component

may be the key to the entire puzzle, thereby depriving Westinghouse of a competitive advantage.

(e) Unrestricted disclosure would jeopardize the position of prominence of Westinghouse in the world market, and thereby give a market advantage to the competition of those countries.

(f) The Westinghouse capacity to invest corporate assets in research and development depends upon the success in obtaining and maintaining a competitive advantage.

(iii) The information is being transmitted to the Commission in confidence and, under the provisions of 10 CFR Section 2.390, it is to be received in confidence by the Commission.

(iv) The information sought to be protected is not available in public sources or available information has not been previously employed in the same original manner or method to the best of our knowledge and belief.

(v) The proprietary information sought to be withheld in this submittal is that which is appropriately marked in "Information on Proposed Changes for the AP1000 Design Control Document Rev. 18" in support of the AP1000 Design Certification Amendment Application, being transmitted by Westinghouse letter (DCP_NRC_002863) and Application for Withholding Proprietary Information from Public Disclosure, to the Document Control Desk. The proprietary information as submitted by Westinghouse for the AP1000 Design Certification Amendment application is expected to be applicable in all licensee submittals referencing the AP1000 Design Certification and the AP1000 Design Certification Amendment Application in response to certain NRC requirements for justification of compliance of the safety system to regulations.

This information is part of that which will enable Westinghouse to:

(a) Manufacture and deliver products to utilities based on proprietary designs.

(b) Advance the AP1000 Design and reduce the licensing risk for the application of the AP1000 Design Certification

(c) Determine compliance with regulations and standards

(d) Establish design requirements and specifications for the system.

Further this information has substantial commercial value as follows:

(a) Westinghouse plans to sell the use of similar information to its customers for purposes of plant construction and operation.

(b) Westinghouse can sell support and defense of safety systems based on the technology in the reports.

(c) The information requested to be withheld reveals the distinguishing aspects of an approach and schedule which was developed by Westinghouse.

Public disclosure of this proprietary information is likely to cause substantial harm to the competitive position of Westinghouse because it would enhance the ability of competitors to provide similar digital technology safety systems and licensing defense services for commercial power reactors without commensurate expenses. Also, public disclosure of the information would enable others to use the information to meet NRC requirements for licensing documentation without purchasing the right to use the information.

The development of the technology described in part by the information is the result of applying the results of many years of experience in an intensive Westinghouse effort and the expenditure of a considerable sum of money.

In order for competitors of Westinghouse to duplicate this information, similar technical programs would have to be performed and a significant manpower effort, having the requisite talent and experience, would have to be expended.

Further the deponent sayeth not.

PROPRIETARY INFORMATION NOTICE

Transmitted herewith are proprietary and/or non-proprietary versions of documents furnished to the NRC in connection with requests for generic and/or plant-specific review and approval.

In order to conform to the requirements of 10 CFR 2.390 of the Commission's regulations concerning the protection of proprietary information so submitted to the NRC, the information which is proprietary in the proprietary versions is contained within brackets, and where the proprietary information has been deleted in the non-proprietary versions, only the brackets remain (the information that was contained within the brackets in the proprietary versions having been deleted). The justification for claiming the information so designated as proprietary is indicated in both versions by means of lower case letters (a) through (f) located as a superscript immediately following the brackets enclosing each item of information being identified as proprietary or in the margin opposite such information. These lower case letters refer to the types of information Westinghouse customarily holds in confidence identified in Sections (4)(ii)(a) through (4)(ii)(f) of the affidavit accompanying this transmittal pursuant to 10 CFR 2.390(b)(1).

COPYRIGHT NOTICE

The reports transmitted herewith each bear a Westinghouse copyright notice. The NRC is permitted to make the number of copies of the information contained in these reports which are necessary for its internal use in connection with generic and plant-specific reviews and approvals as well as the issuance, denial, amendment, transfer, renewal, modification, suspension, revocation, or violation of a license, permit, order, or regulation subject to the requirements of 10 CFR 2.390 regarding restrictions on public disclosure to the extent such information has been identified as proprietary by Westinghouse, copyright protection notwithstanding. With respect to the non-proprietary versions of these reports, the NRC is permitted to make the number of copies beyond those necessary for its internal use which are necessary in order to have one copy available for public viewing in the appropriate docket files in the public document room in Washington, DC and in local public document rooms as may be required by NRC regulations if the number of copies submitted is insufficient for this purpose. Copies made by the NRC must include the copyright notice in all instances and the proprietary notice if the original was identified as proprietary.

ENCLOSURE 4

Description of Proposed Changes for AP1000 DCD Rev. 18, Non-Proprietary

Change No. 58

Subject

Revision of AP1000 Steam Generator Thermal-Hydraulic Data Report

DCD Sections Impacted

Tier 2: Section 5.4.4.3, Table 5.4-5, Table 10.3.2-2, Chapter 16 -Table 3.7.1-2

Description of change to DCD/Reason for change to DCD

Description of DCD Change:

1) Change the steam pressure drop through the restrictor from 15 to 20 psig.
   Change the design fouling factor from 1.1E-4 to 9.0E-5hr-F-ft^2/BTU

   Change the Main Steam safety valve lift settings (psig):

	From	To
V031A/B	1196	1197
V032A/B	1208	1209
V033A/B	1219	1221
V034A/B	1231	1232
V035A/B	1242	1232

   Change the Main Steam safety valve capacity (lb/hr):

	From	To
V030A/B	1,310,000	1,320,000
V031A/B	1,320,000	1,340,000
V032A/B	1,346,000	1,350,000
V033A/B	1,356,000	1,360,000
V034A/B	1,368,000	1,370,000

2) The change to the pressure loss calculations for the primary nozzle pressure loss only affects the thermal hydraulic data report – not the DCD.

Description of Design Change:

1) An alternative calculation of the steam nozzle loss factor (K) is proposed, which results in an increase in the value from approximately 0.11 to 0.17. This is projected to result in a loss of 4-6 psi steam pressure and an increase in moisture content of 0.03%.
2) Revise values in the thermal-hydraulic data report.

Reason for Design Change:

[ ]a,c

ISG-11 Review Results

Must the change be included in the next DCD Revision?	☒ Yes ☐ No

Change No. 59

Subject

Resizing Ancillary Diesel Generator (DG) for Starting Motor Current and Ancillary Diesel Fuel Oil Storage Tank Room Ventilation

DCD Sections Impacted

Tier 2: Figure 1.2-18, Table 3.2-3 (sh 4/68), Figure 3.7.2-19 (sh 1/10), Section 8.3.1.1.3, Figure 8.3.1-3, Figure 8.3.2-2, Section 9.4.2.2.1.5, Figure 9A-3 (sh 1/3), Fig 12.3-1 (sh 11/16), Figure 12.3-2 (sh 11/15), Figure 12.3-3 (sh 11/16)

Description of change to DCD/Reason for change to DCD

Description of DCD Change:
Update the Annex building General Arrangement, Key Structural Dimensions, Fire Area, Radiation Zone, and Radiological Access Control drawings to show increased DG size and revised room layout. Place required larger fuel tank one floor lower (at grade), using open floor grating to extend same fire zone.

Revise principal construction code for ancillary DG fuel tank.

State that the ancillary DG and associated SSCs are designed to preclude spatial interaction with any other non-seismic SSC that could adversely interact to prevent the functioning of the post- 72 SSCs following an SSE.

Update Post 72 hour electrical one line diagrams to show increased generator kW and revised breaker markings and to remove reference to notes.

Update Class 1E 208y/120V UPS One Line Diagram to change "Transportable" AC Generator to "Ancillary" AC Generator and to remove references to notes.

Update Mechanical Equipment Areas HVAC Subsystem to show the modification to the ventilation description for the ancillary diesel fuel oil storage tank room.

Description of Design Change:
Upgrade the 35 kW Ancillary Diesel Generator to 80 kW. Revise the Temporary Electric Power Supply Room floor for grating. Place fuel tank one level down beneath grating.

Extend exhaust ductwork to new fuel tank location. Duct the radiator exhaust to the outside through hurricane louvers, and provide recirculation bypass to control the room temperature.

Reason for Design Change:

[ ] a,c

ISG-11 Review Results

Must the change be included in the next DCD Revision?	☒ Yes ☐ No

Change No. 60

Subject

Addition of Reactor Trip to Mitigate the Inadvertent PRHR Transient

DCD Sections Impacted

Tier 1: Table 2.5.2-2,
Tier 2: Table 3.9-16 (sh 10/24), Table 3.9-16 (note 30), Section 6.3.7.6.1, Section 7.2.1.1, Section 7.2.1.1.9 to Section 7.2.1.1.13, Section 7.2.1.2.2, Table 7.2-1 (sh 3/3), Table 7.2-2 (sh 2/2), Figure 7.2-1 (sh 2, 4/20), Table 15.0-2 (sh 1/5), Table 15.0-4a (sh 1/2), Table 15.0-6 (sh 1/5), Sections 15.1.6.1, 15.1.6.2, 15.1.6.3, Table 15.1.2-1 (sh 1/2), Figures 15.1.6-1 through 15.1.6-8, Chapter 16 – B 3.1.1, Table 3.3.1-1 (page 4/4), B 3.3.1

Description of change to DCD/Reason for change to DCD

Description of DCD Change:
Add the reactor trip to Tier 1 Table 2.5.2-2. This table is referenced in ITAAC 6a for the reactor trips.

Change the frequency of the inservice testing of the PRHR HX discharge valves, PXS-V108s. Currently they are to be cycled once a quarter. The change extends this frequency to every Cold Shutdown.

Add the responsibility of reactor trip to the valve position indicator in section 6.3.7.6.1.

Add the reactor trip description to the reactor trip section of the DCD (Chapter 7). Also, change two reactor trip logic diagrams. The remaining changes are formatting changes to the bulleting.

The changes to Chapter 15 add the reactor trip to two tables. The changes also amend the current DCD section regarding the Inadvertent Operation of the PRHR Heat Exchanger event. Finally, the figures that show various parameters of this event as a function of time at the end of Chapter 15.1 are now deleted.

The first change to Chapter 16 is to delete the Inadvertent PRHR event from the list in section B.3.1.1. This list has events that must be protected by the SDM. With the addition of the reactor trip, there is no need for this event to be protected by the SDM.

The second change to Chapter 16 is to add the trip to the Reactor Trip System Instrumentation portion of the Technical Specifications, section 3.3.1. In this section there is Table 3.3.1-1 that lists the trips and other applicable information regarding them.

The third set of changes to Chapter 16 is located in the B 3.3.1. This section discusses the Reactor Trip System Instrumentation. There are three additions to this section: 1) add the wording of the PRHR trip; 2) add the trip to a list of other trip functions; 3) add the trip to the Surveillance Requirement 3.3.1.11 of which the PRHR trip is now a part.

Description of Design Change:
The Inadvertent PRHR actuation at power is caused by the inadvertent opening of one of the two PRHR HX discharge valves, V108A/B. A reactor trip will be generated when either one of these two valves come off of its closed seat. There is one set of existing 1E magnetic Topworx® VPIs and one continuous VPI currently attached to each of these valves: one for the open position indication, one for the closed position indication, and the continuous is for position indication while the valve is being throttled for core cooling/DHR. The design change will use the existing close position indicator and add three more 1E magnetic Topworx® VPIs to give a total of four closed signals per valve. This configuration is necessary for the "two of four" logic required for a reactor trip signal.

When the V108s are in the close position, the VPIs will give a positive signal to the reactor trip logic indicating that the valves are closed and no trip will be generated. When one or both of the V108s start to open, the magnetic slugs on the valve stem will move away from the magnetic sensor VPIs, opening their contacts, and interrupting

the positive signal to the reactor trip logic. This negative signal will be read by the reactor trip logic configuration and generate a reactor trip signal fast enough to prevent exceeding the reactor fuel design limits.

There is one other situation where reactor protection must be accounted for regarding the inadvertent PRHR event. This situation is during the inservice testing of the V108s. Currently this test is slated to be performed once every quarter. Due to the increased risk of performing this test, this design change proposal is changing the frequency of this test from once every quarter to every cold shutdown. By adopting this change, the inadvertent PRHR event will not occur due to the increased risk of operating the V108s at power. A preliminary evaluation indicates that there is a positive impact on the PRA by not performing this test every quarter. This is due to the unavailability of the equipment due to test and maintenance being reduced, and the decrease of spurious PRHR actuation frequency due to errors while in a maintenance mode being reduced significantly.

Reason for Design Change:

a,c

ISG-11 Review Results	
Must the change be included in the next DCD Revision?	☒ Yes ☐ No

Change No. 61

Subject

Implementation of P-17 for Rod Withdrawal Prohibit

DCD Sections Impacted

Section 15.4.3.2.1.2; Table 15.4-1 (sh 1/3); Figures 15.4.3-1 through 4

Description of change to DCD/Reason for change to DCD

Description of DCD Change:
The change to DCD Section 15.4.3.2.1.2 is made to indicate that the sequence of events depicted in Table 15.4-1 is a representative case and not a limiting case.

Table 15.4-1 is also changed to reflect Peak nuclear power occurring at time 21.7 seconds and Peak Core heat flux occurring at 24.2 seconds.

Figures 15.4.3-1 through 4 have been revised to reflect these inputs.

Description of Design Change:
The current design requires the P-17 signal coincident with the Beacon Unavailable Signal to generate the automatic rod withdrawal prohibit. This change would remove the Beacon Unavailable Signal and the associated AND gate to enable an automatic rod withdrawal prohibit solely on the rate of change in nuclear power (P-17).

Reason for Design Change:

[ ]a,c

ISG-11 Review Results

Must the change be included in the next DCD Revision?	☒ Yes ☐ No

Change No. 62

Subject

Redesign of Reactor Vessel Support System

DCD Sections Impacted

Tier 2 Sections 3.8.3.1.1.1, 3.8.3.5.1.1, 5.4.10.2.1; Figure 3.8.3-4

Description of change to DCD/Reason for change to DCD

Description of DCD Change:

Section 3.8.3.1.1.1 is modified to reflect the new RV support design. Mention of the CA04 module is removed as the embedded steel plates on the module no longer take the load from the RV and RV supports with the new design.

Section 3.8.3.5.1.1 is modified to clarify that the embedment anchor bolts in the new RV support design are within the ASME jurisdictional boundary, as opposed to the embedments themselves. Also, to remove the statement that Figure 3.8.3-4 shows the jurisdictional boundaries of the RV support system.

Section 5.4.10.2.1 is modified to classify the box structure of the RV support as having an integrally recessed "pocket" at the top of the structure where the RV cold leg nozzle sits, rather than referring to this section as a "shoe."

Figure 3.8.3-4 is modified to reflect the new RV support design. The embedded portions of the supports are no longer shown as bolting into plates on the CA04 module, but rather having dedicated concrete anchorage. Notes 6 and 7 and additional details were added to the figure.

Description of Design Change:

The reactor vessel support system has been redesigned. The four RV support legs, which support the vessel underneath the cold leg nozzles, are no longer bolted into embedded plates of the CA04 structural module. The supports are anchored directly to concrete via steel embedment plates, increasing the stiffness of the design.

Reason for Design Change:

[ ]a,c

ISG-11 Review Results

Must the change be included in the next DCD Revision?	☒ Yes ☐ No

Change No. 63

Subject
DAS PRHR Logic Change
DCD Sections Impacted
Tier 1: Section 2.5.1, Table 2.5.1-1, Table 2.5.1-3, Table 2.5.1-4 Tier 2: Section 7.7.1.11, Figure 7.2-1 (Sheet 19/20), Table 14.3-3, Table 14.3-6 (sh 7/10), Table 16.3-2
Description of change to DCD/Reason for change to DCD
Description of DCD Change: Add trip of turbine and of rods (via MG sets) to the high hot leg temperature actuation functional logic of the DAS. Description of Design Change: A reactor trip and turbine trip are being added to the functional logic of the DAS high hot leg temperature automatic actuations. The trip will be initiated by 2 of 2 sensor output from the hot legs. Reason for Design Change: [ ]a,c
ISG-11 Review Results
Must the change be included in the next DCD Revision? ☒ Yes ☐ No

Change No. 65

Subject

FWS/CVS Isolation on SGS High Alarm

DCD Sections Impacted

Tier 2:
Sections 7.3.1.2.13, 7.3.1.2.15, 15.6.3.1.1, 15.6.3.1.3, 15.6.3.2.1.2, 15.6.3.2.1.3
Tables 7.3-1 (sh 5, 7/9), 15.0-4a (sh 1/2), 15.0-6 (sh 5/5)
Figures 7.2-1 (sh 6, 10/20)
Chapter 16 (Technical Specifications) - Table 3.3.2-1 pages 5, 9/13, B 3.3.2, B 3.4.17

Description of change to DCD/Reason for change to DCD

Description of DCD Change:
An AND logic is added to the PMS software logic (Figure 7.2-1) that combines the existing SG narrow range level High alarm and Reactor Trip to isolate FWS and CVS. The SG Narrow Range Level High coincident with Reactor Trip limiting setpoint is changed to 85% and the Actuation Signal added to the Table 7.3-1 and Table 15.0-6 and Tech Specs Table 3.3.2-1 and its Bases.

Description of Design Change:
An AND logic is being added to the PMS software to isolate the FWS and CVS earlier in the SGTR transient sequence in order to maintain the margin to SG overfill. The SG Narrow Range Level High coincident with Reactor Trip limiting setpoint is changed to 85% of narrow range level span.

Reason for Design Change:

a,c

ISG-11 Review Results

Must the change be included in the next DCD Revision?	☒ Yes ☐ No

ENCLOSURE 5

DCD Pages for All CNs Except 59

Change Number 58

- Limits pressure differentials on internal steam generator components, particularly the tube support plates

The restrictor is configured to minimize the unrecovered pressure loss across the restrictor during normal operation.

5.4.4.2 Design Description

The flow restrictor consists of seven nickel-chromium-iron Alloy 690 (ASME SB-564) venturi inserts which are installed in holes in an integral steam outlet nozzle forging. The inserts are arranged with one venturi at the centerline of the outlet nozzle, and the other six are equally spaced around it. After insertion into the nozzle forging holes, the venturi inserts are welded to the nickel-chromium-iron alloy butteringcladding on the inner surface of the forging.

5.4.4.3 Design Evaluation

The flow restrictor design has been analyzed to determine its structural adequacy. The equivalent throat area of the steam generator outlet is 1.4 square feet. The resultant pressure drop through the restrictor at 100 percent steam flow is approximately 1520 psig. This is based on a design flow rate of 7.49 x 10^6 pounds per hour. Materials of construction of the flow restrictor are in accordance with Code Class 1 Section III of the ASME Code. The material of the inserts is not an ASME Code pressure boundary, nor is it welded to an ASME Code pressure boundary. The method for seismic analysis is dynamic.

5.4.4.4 Inspections

Since the restrictor is not part of the steam system pressure boundary, inservice inspections are not required.

5.4.5 Pressurizer

The pressurizer provides a point in the reactor coolant system where liquid and vapor are maintained in equilibrium under saturated conditions for pressure control of the reactor coolant system during steady-state operations and transients. The pressurizer provides a controlled volume from which level can be measured.

The pressurizer contains the water inventory used to maintain reactor coolant system volume in the event of a minor system leak for a reasonable period without replenishment. The pressurizer surge line connects the pressurizer to one reactor coolant hot leg. This allows continuous coolant volume and pressure adjustments between the reactor coolant system and the pressurizer.

5.4.5.1 Design Bases

The pressurizer is sized to meet following requirements:

- The combined saturated water volume and steam expansion volume is sufficient to provide the desired pressure response to system volume changes.

Table 5.4-5

STEAM GENERATOR DESIGN PARAMETERS (NOMINAL VALUES)

Tube pitch, inches	0.980 (triangular)
Overall length, inches	884.26*
Upper shell I.D., inches	210
Lower shell I.D., inches	165
Tubesheet thickness, inches	31.13**
Primary water volume, ft^3	2077
Water volume in tubes, ft^3	1489
Water volume in plenums, ft^3	588
Secondary water volume, ft^3	3646
Secondary steam volume, ft^3	5222
Secondary water mass, lbm	175,758
Design fouling factor, hr-°F-ft^2/BTU	~~1.1x10-4~~9.0 x 10-5

Notes:

* Measured from steam nozzle to the flat, exterior portion of the channel head.

** Base metal thickness.

Table 10.3.2-2

DESIGN DATA FOR MAIN STEAM SAFETY VALVES

Number per main steam line		6
Total number of valves required per steam line for full power operation		6
Relieving capacity per valve at 110% of design pressure		1,370,000 lb/hr
Relieving capacity per steam line at 110% of design pressure		8,240,000 lb/hr
Total relieving capacity, 2 lines at 110% of design pressure		16,480,000 lb/hr
Valve size		8 x 10 (Dual Discharge)
Design code		ASME Code, Section III, Class 2, seismic Category I
Valve Number	**Set Pressure (psig)**	**Relieving Capacity[a] (lb/hr)**
SGS PL V030A(B)	1185	≥ 1,3~~1~~20,000
SGS PL V031A(B)	119~~6~~7	≥ 1,3~~2~~40,000
SGS PL V032A(B)	120~~8~~9	≥ 1,34~~5~~0,000
SGS PL V033A(B)	12~~19~~21	≥ 1,3~~5~~60,000
SGS PL V034A(B)	123~~1~~2	≥ 1,3~~6~~70,000
SGS PL V035A(B)	1243~~2~~	≥ 1,370,000
Total capacity, at 103% valve setpoint pressures, 2 lines		≥ 16,~~10~~220,000

Note:

a. Based on system accumulation pressure of 3%, per Subsection NC-7512 of ASME Code, Section III, Division 1, 1989 Edition, Subsection NC, Class 2 components.

Table 3.7.1-2 (page 1 of 1)
Main Steam Safety Valve Lift Settings

VALVE NUMBER		LIFT SETTING (psig ± 1~~3~~%)
STEAM GENERATOR		
#1	#2	
V030A	V030B	1185
V031A	V031B	11~~9~~67
V032A	V032B	120~~8~~9
V033A	V033B	12~~19~~21
V034A	V034B	123~~1~~2
V035A	V035B	124~~3~~2

Change Number 60

Table 2.5.2-2
PMS Automatic Reactor Trips

Source Range High Neutron Flux Reactor Trip
Intermediate Range High Neutron Flux Reactor Trip
Power Range High Neutron Flux (Low Setpoint) Trip
Power Range High Neutron Flux (High Setpoint) Trip
Power Range High Positive Flux Rate Trip
Reactor Coolant Pump High Bearing Water Temperature Trip
Overtemperature Delta-T Trip
Overpower Delta-T Trip
Pressurizer Low Pressure Trip
Pressurizer High Pressure Trip
Pressurizer High Water Level Trip
Low Reactor Coolant Flow Trip
Low Reactor Coolant Pump Speed Trip
Low Steam Generator Water Level Trip
High-2 Steam Generator Water Level Trip
Automatic or Manual Safeguards Actuation Trip
Automatic or Manual Depressurization System Actuation Trip
Automatic or Manual Core Makeup Tank (CMT) Injection Trip
Passive Residual Heat Removal (PRHR) Actuation Reactor Trip

Table 3.9-16 (Sheet 10 of 2~~3~~4)

VALVE INSERVICE TEST REQUIREMENTS

Valve Tag Number	Description[1]	Valve/Actuator Type	Safety-Related Missions	Safety Functions[2]	ASME Class/ IST Category	Inservice Testing Type and Frequency	IST Notes
PXS-PL-V043	Nitrogen Supply Containment Isolation IRC	Check	Maintain Close Transfer Close	Active Containment Isolation Safety Seat Leakage Remote Position	Class 2 Category AC	Remote Position Indication, Exercise/2 Years Containment Isolation Leak Test Check Exercise/Quarterly	27
PXS-PL-V101	PRHR HX Inlet Isolation	Remote MO GATE	Maintain Open	Remote Position	Class 1 Category B	Remote Position Indication, Exercise/2 Years	
PXS-PL-V108A	PRHR HX Control	Remote AO ~~GLOBE~~Ball	Maintain Open Transfer Open	Active-to-Failed Remote Position	Class 1 Category B	Remote Position Indication, Exercise/2 Years Exercise Full Stroke/~~Quarterly~~ Cold Shutdown Operability Test	30, 31
PXS-PL-V108B	PRHR HX Control	Remote AO ~~GLOBE~~Ball	Maintain Open Transfer Open	Active-to-Failed Remote Position	Class 1 Category B	Remote Position Indication, Exercise/2 Years Exercise Full Stroke/~~Quarterly~~ Cold Shutdown Operability Test	30, 31
PXS-PL-V117A	Containment Recirculation A Isolation	Remote MO GATE	Maintain Open	Remote Position	Class 3 Category B	Remote Position Indication, Exercise/2 Years	31
PXS-PL-V117B	Containment Recirculation B Isolation	Remote MO GATE	Maintain Open	Remote Position	Class 3 Category B	Remote Position Indication, Exercise/2 Years	
PXS-PL-V118A	Containment Recirculation A Isolation	Squib	Maintain Open Maintain Close Transfer Open	Active Remote Position	Class 3 Category D	Remote Position Indication, Alternate/2 Years Charge Test Fire/20% in 2 Years	5
PXS-PL-V118B	Containment Recirculation B Isolation	Squib	Maintain Open Maintain Close Transfer Open	Active Remote Position	Class 3 Category D	Remote Position Indication, Alternate/2 Years Charge Test Fire/20% in 2 Years	5
PXS-PL-V119A	Containment Recirculation A Check	Check	Maintain Open Maintain Close Transfer Open Transfer Close	Active Remote Position	Class 3 Category BC	Remote Position Indication, Exercise/2 Years Check-Initial Open Differential Pressure/Refueling~~2 Years~~ Check Exercise/Refueling Shutdown	11
PXS-PL-V119B	Containment Recirculation B Check	Check	Maintain Open Maintain Close Transfer Open Transfer Close	Active Remote Position	Class 3 Category BC	Remote Position Indication, Exercise/2 Years Check-Initial Open Differential Pressure/Refueling~~2 Years~~ Check Exercise/Refueling Shutdown	11
PXS-PL-V120A	Containment Recirculation A Isolation	Squib	Maintain Open Maintain Close Transfer Open	Active Remote Position	Class 3 Category D	Remote Position Indication, Alternate/2 Years Charge Test Fire/20% in 2 Years	5
PXS-PL-V120B	Containment Recirculation B Isolation	Squib	Maintain Open Maintain Close Transfer Open	Active Remote Position	Class 3 Category D	Remote Position Indication, Alternate/2 Years Charge Test Fire/20% in 2 Years	5

30. ~~Deleted.~~This note applies to the passive residual heat removal heat exchanger discharge valves (PXS-V108A and V108B). Exercise and fail safe testing these valves on a 3-month frequency is not in the interest of plant safety due to the cooler water in the system line possibly creating a reactor transient. Opening these valves to the suction of the reactor coolant pumps aligns cold water to direct injection into the reactor core. Also, the thermal transient expected during this testing, on the discharge line, is expected to be severe due to the large temperature difference across the discharge valves. Quarterly IST will aggravate the thermal transient due to the operating temperature during the valve exercise testing and the number of times this thermal transient takes place. These valves will be full stroke exercise and fail safe tested during cold shutdown periods.

31. These valves are subject to operability testing per the requirements of 10 CFR 50.55a. The test frequencies are to be established in accordance with the results of the Joint Owners Group (JOG) program for periodic verification of design-basis capability of safety-related motor-operated valves (MOVs). Based on the composition of power-operated valves (POVs) in this table, the JOG approach shall be applied to all actuator types. POV risk ranking and functional margin are used to establish the recommended maximum periodic verification test (Operability) interval.

    These POVs (motor-operated, air-operated, solenoid-operated, and hydraulically-operated) shall be addressed in the owner's POV respective program-specific documents. Attributes of these programs shall include lessons learned as delineated in the NRC's Regulatory Issue Summary (RIS) 2000-3, "Performance of Safety-Related Power-Operated Valves Under Design Basis Conditions." See subsection 3.9.6.2.2 for the factors to be considered in the evaluation of operability testing and subsection 3.9.8.4 for the Combined License information item. ~~The test frequency is the longer of every 3 refueling cycles or 5 years until sufficient data exists to determine a longer test frequency is appropriate in accordance with Generic Letter 96-05. Some of the valves will be tested the first time after a shorter period to provide for trending information. The specified frequency for operability testing is a maximum of once every 10 years provided there is sufficient experience to justify the longer interval.~~

32. These valves are subject to leak testing to support the non-safety-related classification of the CVS purification subsystem inside containment. These valves are not included in the PIV integrity Technical Specification 3.4.16. The leakage through valves CVS-V001, CVS-V002, and CVS-V080 will be tested separately with a leakage limit of 1.5 gpm for each valve. The leakage through valves CVS-V081, V082, V084, and V085 will be tested at the same time as a group with a leakage limit of 1 gpm for the group. The leak tests will be performed at reduced RCS pressures. The observed leakage at lower pressures can be assumed to be the leakage at the maximum pressure as long as the valve leakage is verified to diminish with increasing pressure differential. Verification that the valves have the characteristic of decreasing leakage with pressure may be provided with two tests at different test pressures. The test requirements including the minimum test pressure and the difference between the test pressures will be defined by the Combined License applicant in the inservice test program as discussed in subsection 3.9.8.

33. This note applies to valve FHS-V001. This valve closes one end of the fuel transfer tube. The fuel transfer tube is normally closed by a flange except during refuelings. This valve has an active safety function to close when the fuel transfer tube flange is removed and normal shutdown cooling is lost. Closing this valve, along with other actions, provides containment closure which allows long term core cooling to be provided by the PXS. As a result this valve is only required to be operable during refueling operations.

34. This note applies to the moisture separator reheater 2nd stage steam isolation valve (MSS-V015A/B), turbine control valves (MTS-V002A/B, V004A/B), main turbine stop valves (MTS-V001A/B, V003A/B), the turbine bypass control valves (MSS-V001, V002, V003, V004, V005, V006). These valves are not ASME Code Class 1, 2, or 3, and the ASME 1ST Category is indicated based on the valve functions listed. These valves are relied on in the safety analyses for those cases in which the rupture of the main steam or feedwater piping inside containment is the postulated initiating event. These valves are credited in single failure analysis to mitigate the event.

35. This note applies to the turbine stop valves (MTS-V001A/B, V003A/B). The valves are not quarterly stroke tested since full stroke testing would result in a plant transient during power operation. The valves will be full stroke tested during cold shutdowns. See Note 34 above.

36. In each of the four turbine inlet lines, there is a turbine stop valve and turbine control valve. Only one of the valves in each of the four lines is required by Technical Specification 3.7.2 to be operable.

37. This note applies to inside containment isolation valves CAS-V205, DWS-V245, and FPS-V052. It is not practical to exercise these valves during power operation or cold shutdowns since the valves are located inside containment and are locked closed. These valves are exercised during refueling conditions when system and plant conditions allow entry into containment.

38. The exercise stroke test for the VES pressure regulating valves will consist of a pressure drop test across the valve using the downstream test connection. This method ensures adequate testing of the valves.

6.3.7.6 Valve Position Indication and Control

6.3.7.6.1 Valve Position Indication

Individual valve position is provided for the safety-related, remotely actuated valves listed in Table 6.3-1. In addition, valve position is provided for certain manually operated valves, as described in subsection 6.3.2.2.8.2, that can isolate redundant passive core cooling equipment, if mispositioned. The incontainment refueling water injection check valves~~,~~ and containment recirculation check valves~~, accumulator check valves, and the core makeup tank check valves~~ have nonintrusive position indication.

For passive core cooling system valves with position indication, alarms in the main control room are provided to alert the operators to valve mispositioning. For the passive residual heat removal heat exchanger discharge valves, valve position indication is used to initiate a reactor trip upon opening of these valves while the reactor is at power.

6.3.7.6.2 Valve Position Control

Valve controls are provided for remotely operated passive core cooling system valves. Table 6.3-1 provides a list of the passive core cooling system remotely operated valves. These remotely operated valves have controls in the main control room. This table also provides references to specific sections in DCD Chapter 7 that provide additional descriptions of the valve controls.

6.3.7.6.2.1 Accumulator Motor-Operated Valve Controls

As part of the plant shutdown procedures, the operator is required to close the accumulator motor-operated valves. This prevents a loss of accumulator water inventory to the reactor coolant system when the reactor coolant system is depressurized. The valves are closed after the reactor coolant system has been depressurized to below the setpoint to block the safeguards actuation signal. The redundant pressure and level alarms on each accumulator function to alert the operator to close these valves, if any are inadvertently left open. Power is locked out after the valves are closed. During plant startup, the operator is directed by plant procedures to energize and open these valves prior to reaching the reactor coolant system pressure setpoint that unblocks the safeguards actuation signal. Redundant indication and alarms are available to alert the operator if a valve is inadvertently left closed once the reactor coolant system pressure increases beyond the setpoint. Power is also locked out after these valves are opened.

The accumulator isolation valves are not required to move during power operation. For a description of limiting conditions for operation and surveillance requirements of these valves, refer to the technical specifications. The accumulator isolation valves receive a safeguards actuation signal to confirm that they are open in the event of an accident. As a result of the power lock out, technical specifications, and the redundant position indication and alarms, the valve controls are non-safety-related.

Each of the four reactor trip actuation divisions consists of two reactor trip circuit breakers. The reactor is tripped when two or more actuation divisions output a reactor trip signal. This automatic trip demand initiates the following two actions. It deenergizes the under-voltage trip attachments on the reactor trip breakers, and it energizes the shunt trip devices on the reactor trip breakers. Either action causes the breakers to trip. Opening the appropriate trip breakers removes power to the rod drive mechanism coils, allowing the rods to fall into the core. This rapid negative reactivity insertion causes the reactor to shutdown.

Bypasses of parameter channels used to generate reactor trip signals and of reactor trip actuation divisions are permitted as described in subsection 7.2.1.1.12. Single failure criterion is met even when one channel or division is bypassed. Bypassing two or more redundant channels or divisions is not allowed.

Subsection 7.2.1.1 provides a description of each of the reactor trip functions. Figure 7.2-1 shows the functional diagrams for reactor trips, as well as functional diagrams for other related plant functions. Figure 7.2-1 sheets are derived from the APP-PMS-J1 drawings and the references shown on Figure 7.2-1 sheets are tied to these parent drawings and not the sheets. Table 7.2-5 provides a cross reference to match the APP-PMS-J1 drawing to its corresponding Figure 7.2-1 sheet.

7.2.1.1 Functional Description

The following subsections describe the specific reactor trip functions and are grouped according to the following ~~nine~~ 11 conditions:

- Subsection 7.2.1.1.1 Nuclear Startup Trips
- Subsection 7.2.1.1.2 Nuclear Overpower Trips
- Subsection 7.2.1.1.3 Core Heat Removal Trips
- Subsection 7.2.1.1.4 Primary Overpressure Trips
- Subsection 7.2.1.1.5 Loss of Heat Sink Trips
- Subsection 7.2.1.1.6 Feedwater Isolation Trip
- Subsection 7.2.1.1.7 Automatic Depressurization Systems Actuation Reactor Trip
- Subsection 7.2.1.1.8 Core Makeup Tank Injection Trip
- Subsection 7.2.1.1.9 Reactor Trip on Passive Residual Heat Removal Actuation
- Subsection 7.2.1.1.~~9~~10 Reactor Trip on Safeguards Actuation
- Subsection 7.2.1.1.1~~0~~1 Manual Reactor Trip

Table 7.2-2 lists the reactor trips and summarizes the coincidence logic to trip. Table 7.2-3 provides the interlocks for each trip. Table 7.2-4, lists system level manual inputs to reactor trip functions.

7.2.1.1.1 Nuclear Startup Trips

Source Range High Neutron Flux Trip

Source range high neutron flux trips the reactor when two of the four source range channels exceed the trip setpoint. This trip provides protection during reactor startup and plant shutdown.

Figure 7.2-1, sheet 10, shows the logic for this trip function.

7.2.1.1.7 Automatic Depressurization Systems Actuation Reactor Trip

A reactor trip is initiated if an automatic depressurization system actuation occurs either automatically or manually. This provides a reactor trip if the system is depressurized and a trip is not initiated from another source. The automatic depressurization system actuation function is discussed in subsection 7.3.1.2.4.

Manual automatic depressurization system actuation is initiated from either of two sets of controls in the main control room. Operating either of the two sets of controls also sends a reactor trip signal to the reactor trip switchgear breakers. Outputs on the control sets, physically and electrically separated, send their position status to the protection and safety monitoring system. These inputs de-energize the undervoltage trip attachments on the reactor trip breakers, causing them to trip open. Additional outputs interrupt power to the shunt trip interposing relays, actuating the shunt trip attachments on each reactor trip circuit breaker. These provide a backup to the undervoltage trip of the breakers.

Figure 7.2-1, sheet 15 shows the logic for this trip function. There are no interlocks or bypasses associated with this trip.

7.2.1.1.8 Core Makeup Tank Injection Trip

A reactor trip is initiated if core makeup injection occurs either automatically or manually. Since core makeup tank injection results in a trip of the reactor coolant pumps, providing a reactor trip upon core makeup tank injection maximizes the margin to DNB at all power levels. The core makeup tank injection function is discussed in subsection 7.3.1.2.3.

Manual core makeup tank injection is initiated from either of two controls in the main control room. Operating either of the two controls also sends a reactor trip signal to the reactor trip switchgear breakers. Outputs on each control, physically and electrically separated, send their position status to the protection and safety monitoring system. These inputs de-energize the undervoltage trip attachments on the reactor trip breakers, causing them to trip open. Additional outputs on each control interrupt power to the shunt trip interposing relays, actuating the shunt trip attachments on each reactor trip circuit breaker. These provide a backup to the undervoltage trip of the breakers.

Figure 7.2-1, sheets 2 and 12 show the logic for this trip function. There are no interlocks or bypasses associated with this trip.

7.2.1.1.9 Reactor Trip on Passive Residual Heat Removal System Actuation

A reactor trip is initiated when the passive residual heat removal (PRHR) system's discharge valves come off their fully shut seat, allowing flow through the PRHR heat exchanger (PRHR HX). This reactor trip will prevent the fuel design limits from being exceeded in the event the PRHR HX is inadvertently aligned to allow flow when the reactor is being operated at power conditions. The PRHR HX alignment is discussed in subsection 7.3.1.2.7.

Figure 7.2-1, sheets 2 and 4 show the logic for this trip function. There are no interlocks or bypasses associated with this trip.

7.2.1.1.~~9~~10 Reactor Trip on Safeguards Actuation

A reactor trip is initiated with any signal that causes a safeguards actuation. This reactor trip occurs whether the safeguards actuation is commanded automatically or manually. The means for actuating safeguards automatically are described in Section 7.3. This trip protects the core against a loss of reactor coolant or a steam line rupture.

Manual safeguards actuation is initiated from either of two controls in the main control room. Operating either of the two controls also sends a reactor trip signal to the reactor trip switchgear breakers. Outputs on each control, physically and electrically separated, send their position status to the protection and safety monitoring system. These inputs de-energize the undervoltage trip attachments on the reactor trip breakers, causing them to trip open. Additional outputs on each control interrupt power to the shunt trip interposing relays, actuating the shunt trip attachments on each reactor trip circuit breaker. These provide a backup to the undervoltage trip of the breakers.

Figure 7.2-1, sheets 2 and 11, show the logic for this trip function. There are no interlocks or bypasses associated with this trip.

7.2.1.1.1~~0~~1 Manual Reactor Trip

The manual reactor trip consists of 2 controls in the main control room, either of which trip all 8 of the reactor trip switchgear breakers. The reactor trip circuit breakers contain both undervoltage and shunt trip attachments. The shunt trip acts as a diverse backup to the undervoltage trip in the breakers. Contacts on each control, physically and electrically separated, are in series with the undervoltage trip attachment on the reactor trip breakers, the shunt trip attachment interposing relays, and the power outputs at the protection and safety monitoring system cabinet. Actuating either control interrupts power from the voting logic to the undervoltage trip attachments, releasing them. It also interrupts power to shunt trip interposing relays, actuating the shunt trip attachments. The breakers trip when either the shunt trip attachments are energized or the undervoltage trip attachments are de-energized. Actuating either manual trip control causes each breaker to trip by initiating both of these actions.

Figure 7.2-1, sheets 2 and 13, show the logic for the manual trip. There are no interlocks or bypasses associated with this trip.

7.2.1.1.1~~1~~2 Reactor Trip System Interlocks

The interlocks used in the reactor trip functions are designated as P-xx permissives. Table 7.2-3 provides a listing of these interlocks. These permissives are implemented at the channel level rather than at the logic level because plant availability has been determined to be improved using this technique of integrating permissives into each channel.

Manual blocks to reactor trip are listed on Table 7.2-4 and are described in the following subsections. The source, intermediate, power (low setpoint), and steam generator water level

manual blocks, when used in conjunction with the applicable permissives, are implemented during startup.

Source Range Block (One Control for each Division)

The source range reactor trip may be manually blocked upon the occurrence of the P-6 permissive and is automatically reset when the permissive condition is not met. The channel is automatically blocked upon the occurrence of the P-10 permissive with the block automatically removed when the P-10 condition is not met. Figure 7.2-1, sheet 3, shows these blocks.

Intermediate Range Block (One Control for each Division)

The intermediate range reactor trip may be manually blocked upon the occurrence of the P-10 permissive and is automatically reset when the permissive condition is not met. Figure 7.2-1, sheet 3, shows this block.

Power Range (Low Setpoint) Block (One Control for each Division)

The power range low setpoint reactor trip may be manually blocked upon the occurrence of the P-10 permissive and is automatically reset when the permissive condition is not met. Figure 7.2-1, sheet 3, shows this block.

Steam Generator High-2 Water Level Block (One Control for each Division)

The steam generator High-2 reactor trip may be manually blocked upon the occurrence of the P-11 permissive. This trip function is automatically reset when the permissive condition is not met. Figure 7.2-1, sheets 9, 10, and 11, illustrates the functional logic relating to this function.

7.2.1.1.1~~2~~3 Bypasses of Reactor Trip Functions

Each channel used in reactor trip can be bypassed, as discussed in subsection 7.1.2.9, except for reactor trips resulting from manual initiations. One channel can be bypassed for an indefinite period of time with the normal two-out-of-four trip logic automatically reverting to a two-out-of-three trip logic. Bypassing two or more channels is not allowed.

7.2.1.2 Design Basis for Reactor Trips

This section provides the design bases information on the reactor trip function, including the information required by Section 4 of IEEE-603-1991. Reactor trip is a protective function generated as part of the protection and safety monitoring system. Those design bases relating to the equipment that initiates and accomplishes reactor trips are contained in WCAP-15776 (Reference 2). The design bases presented here concern the variables monitored for reactor trips, the minimum performance requirements in generating the trips, and the requirements placed on reactor trips during various reactor operating modes.

7.2.1.2.1 Design Basis: Generating Station Conditions Requiring Reactor Trip (Paragraph 4.1 of IEEE-603-1991)

The generating station conditions requiring protective actions are analyzed in Chapter 15. Conditions that result in a reactor trip are listed in Table 15.0-6. This table correlates the accident conditions (II, III, or IV events) to each reactor trip.

7.2.1.2.2 Design Basis: Variables, Levels, Ranges, and Accuracies Used in Reactor Trip Functions (Paragraphs 4.1, 4.2, and 4.4 of IEEE-603-1991)

The variables monitored for reactor trips are:

- Neutron flux
- Reactor coolant pump bearing water temperature
- Pressurizer pressure
- Water level in the pressurizer
- Reactor coolant flow in each loop
- Speed of each reactor coolant pump
- Water level in each steam generator
- Cold leg temperature (T_{cold}) in each loop
- Hot leg temperature (T_{hot}) in each loop
- Status of each manual reactor trip control
- Status of PRHR HX discharge valves

The ranges, accuracies, and response times for each variable are listed on Table 7.2-1.

A discussion on levels that require reactor trip is contained in subsection 7.2.1.1.

The reactor trip setpoints are maintained by the setpoint program which is described~~allowable values for the limiting safety-related system settings and the trip setpoint for reactor trips are~~ in the technical specifications (Chapter 16).

7.2.1.2.3 Design Basis: Spatially Dependent Parameters Used in Reactor Trip (Paragraph 4.6 of IEEE-603-1991)

The hot and cold leg temperature signals required for input to the protection and control functions are obtained using thermowell-mounted RTDs installed in each reactor coolant loop. The hot leg temperature measurement in each loop is accomplished using six fast-response, narrow-range RTDs each in its own thermowell; three thermowells are RTDs for each of the two divisions monitoring that hot leg. The three thermowells for each division are mounted approximately 120 degrees apart in the cross-sectional plane of the piping, to obtain a representative temperature sample. The temperatures measured by the three RTDs are different due to hot leg temperature streaming and vary as a function of thermal power. Therefore, these signals are averaged using electronic weighting to generate a hot leg average temperature. Provisions are incorporated into the process electronics to allow for operation with only two RTDs in service. The two RTD measurements can be biased to compensate for the loss of the third RTD.

Table 7.2-1 (Sheet 3 of 3)

REACTOR TRIP VARIABLES, LIMITS, RANGES, AND ACCURACIES (DESIGN BASIS FOR REACTOR TRIP) (NOMINAL)

Protective Functions	Variable	Range of Variables	Typical Accuracy[1]	Typical Response Time (Sec)[2]
Automatic or Manual Safeguards Actuation	See Table 7.3-4	See Table 7.3-4	See Table 7.3-4	See Table 7.3-4
Manual Reactor Trip	Control status	N/A	N/A	N/A
Automatic or Manual Depressurization System Actuation	See Table 7.3-4	See Table 7.3-4	See Table 7.3-4	See Table 7.3-4
Automatic or Manual Core Makeup Tank Injection	See Table 7.3-4	See Table 7.3-4	See Table 7.3-4	See Table 7.3-4
Automatic or Manual PRHR Actuation	PRHR discharge valve position	Valve closed/valve not-closed	N/A	1.25

Notes:

1. Measurement uncertainty typical of actual applications. Harsh environment allowances have been included where applicable.
2. Delay from the time that the process variable exceeds the setpoint until the time that the control rods are free to fall into the core (includes reactor trip breaker opening delay and control rod drive mechanism gripper release delay).

Table 7.2-2 (Sheet 2 of 2)

REACTOR TRIPS

Reactor Trip[1]	No. of Channels	Division Trip Logic	Bypass Logic	Permissives and Interlocks (See Table 7.2-3)
Automatic Safeguards Actuation	4	2/4	Yes[2]	----
Automatic Depressurization System Actuation	4	2/4	Yes[2]	----
Automatic Core Makeup Tank Injection	4	2/4	Yes[2]	----
PRHR Actuation	4	2/4	Yes[2]	----
Manual Safeguards Actuation	2 controls	1/2 controls	No	----
Manual Depressurization System Actuation	4 controls	2/4 controls	No	----
Manual Core Makeup Tank Injection	2 controls	1/2 controls	No	----
Manual Reactor Trip	2 controls	1/2 controls	No	----

Notes:

1. Reactor Trip divisions are also bypassed with the logic as defined in note 2 below.
2. Bypass Logic = 2/4 with no bypasses; 2/3 with 1 bypass; more than one bypass is not allowed.

---- No permissive or interlock.

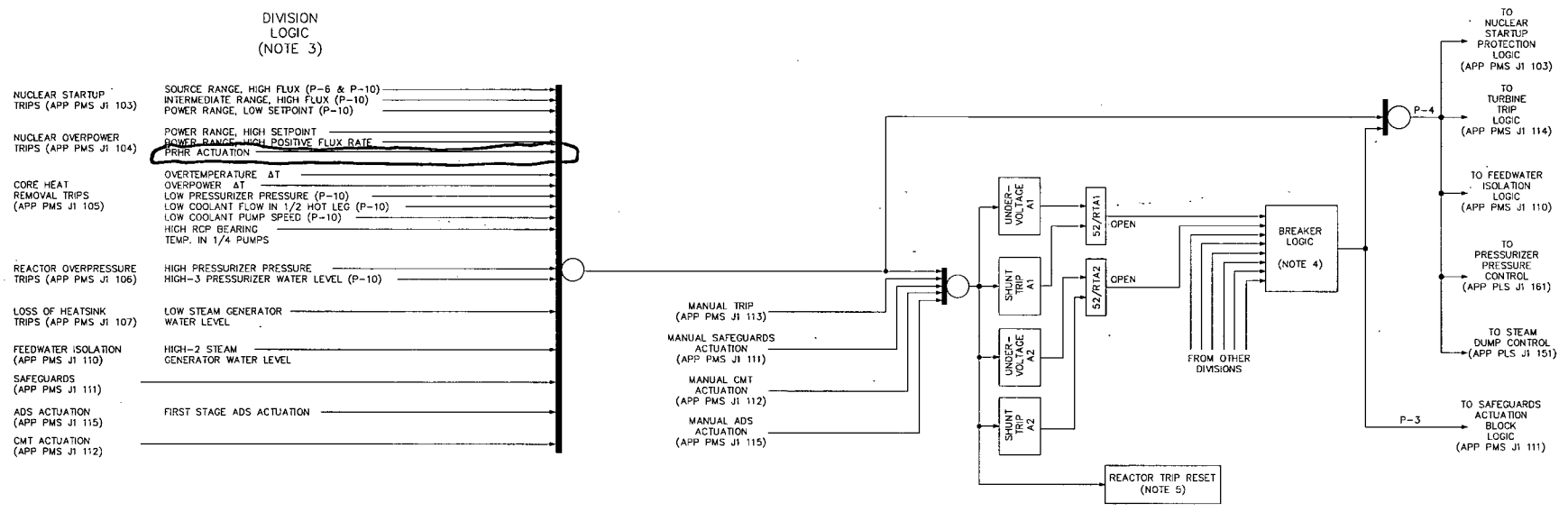

Figure 7.2-1 (Sheet 2 of 20)

Functional Diagram
Reactor Trip Functions

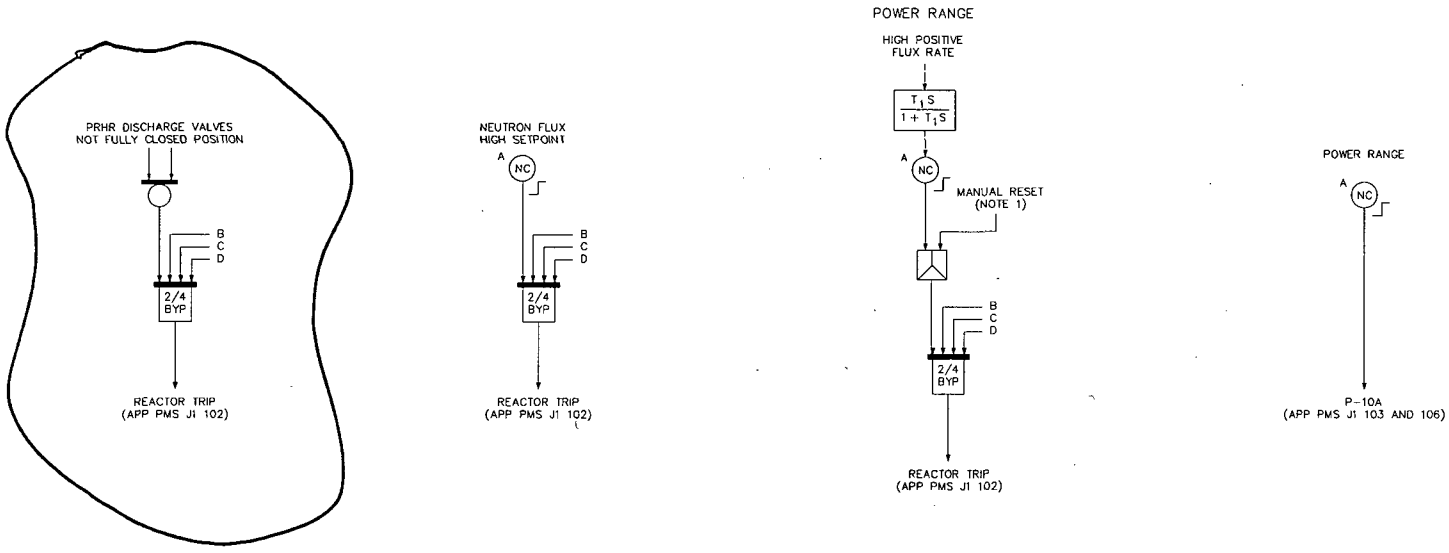

NOTES:

1. FOUR MOMENTARY CONTROLS, ONE FOR EACH DIVISION.
2. DELETED.

Figure 7.2-1 (Sheet 4 of 20)

Functional Diagram
Nuclear Overpower Protection

Table 15.0-2 (Sheet 1 of 5)

SUMMARY OF INITIAL CONDITIONS AND COMPUTER CODES USED

Section	Faults	Computer Codes Used	Reactivity Coefficients Assumed			Initial Thermal Power Output Assumed (MWt)
			Moderator Density ($\Delta k/gm/cm^3$)	Moderator Temperature (pcm/°F)	Doppler	
15.1	Increase in heat removal from the primary system					
	Feedwater system malfunctions causing a reduction in feedwater temperature	Bounded by excessive increase in secondary steam flow	–	–	–	–
	Feedwater system malfunctions that result in an increase in feedwater flow	LOFTRAN, FACTRAN, VIPRE-01	0.470	–	Upper curve of Figure 15.0.4-1	0 and 3415
	Excessive increase in secondary steam flow	LOFTRAN, FACTRAN, VIPRE-01	0.0 and 0.470	–	Upper and lower curves of Figure 15.0.4-1	3415
	Inadvertent opening of a steam generator relief or safety valve	LOFTRAN, VIPRE-01	Function of moderator density (see Figure 15.1.4-1)	–	See subsection 15.1.4.	0 (subcritical)
	Steam system piping failure	LOFTRAN, VIPRE-01	Function of moderator density (see Figure 15.1.4-1)	–	See subsection 15.1.5	0 (subcritical)
	Inadvertent operation of the PRHR heat exchanger	~~LOFTRAN, FACTRAN, VIPRE-01~~N/A	~~See subsection 15.1.6.2.1~~N/A	–	~~Upper curve of Figure 15.0.4-1~~N/A	3415

Table 15.0-4a (Sheet 1 of 2)

PROTECTION AND SAFETY MONITORING SYSTEM SETPOINTS AND TIME DELAY ASSUMED IN ACCIDENT ANALYSES

Function	Limiting Setpoint Assumed in Analyses	Time Delays (seconds)
Reactor trip on power range high neutron flux, high setting	118%	0.9
Reactor trip on power range high neutron flux, low setting	35%	0.9
Reactor trip on source range neutron flux reactor trip	Not applicable	0.9
Overtemperature ΔT	Variable (see Figure 15.0.3-1)	2.0
Overpower ΔT	Variable (see Figure 15.0.3-1)	2.0
Reactor trip on high pressurizer pressure	2460 psia	2.0
Reactor trip on low pressurizer pressure	1800 psia	2.0
Reactor trip on low reactor coolant flow in either hot leg	87% loop flow	1.45
Reactor trip on reactor coolant pump under speed	90%	0.767
Reactor trip on low steam generator narrow range level	95,000 lbm	2.0
High-2 steam generator level	95% of narrow range level span	2.0 (reactor trip) 0.0 (turbine trip) 2.0 (feedwater isolation)
Reactor trip on high-3 pressurizer water level	76% of span	2.0
PRHR actuation on low steam generator wide range level	55,000 lbm	2.0
"S" signal and steam line isolation on low T_{cold}	500°F	2.0
"S" signal and steam line isolation on low steam line pressure	405 psia (with an adverse environment assumed) 535 psia (without an adverse environment assumed)	2.0
"S" signal on low pressurizer pressure	1700 psia	2.0
Reactor trip on PRHR discharge valves not closed	Valve not closed	1.25

Table 15.0-6 (Sheet 1 of 5)

PLANT SYSTEMS AND EQUIPMENT AVAILABLE FOR TRANSIENT AND ACCIDENT CONDITIONS

Incident	Reactor Trip Functions	ESF Actuation Functions	ESF and Other Equipment
Section 15.1			
Increase in heat removal from the primary system			
Feedwater system malfunctions that result in an increase in feedwater flow	High-2 Steam Generator Level, Power range high flux, overtemperature	High-2 steam generator level produced feedwater isolation and turbine trip	Feedwater isolation valves
Excessive increase in secondary steam flow	Power range high flux, overtemperature ΔT, overpower ΔT, manual	–	–
Inadvertent opening of a steam generator safety valve	Power range high flux, overtemperature ΔT, overpower ΔT, Low pressurizer pressure, "S", manual	Low pressurizer pressure, low compensated steam line pressure, low T_{cold}, low-2 pressurizer level	Core makeup tank, feedwater isolation valves, main steam isolation valves (MSIVs), startup feedwater isolation, accumulators
Steam system piping failure	Power range high flux, overtemperature ΔT, overpower ΔT, Low pressurizer pressure, "S", manual	Low pressurizer pressure, low compensated steam line pressure, high-2 containment pressure, low T_{cold}, manual	Core makeup tank, feedwater isolation valves, main steam line isolation valves (MSIVs), accumulators, startup feedwater isolation
Inadvertent operation of the PRHR	~~Power range high flux, overtemperature ΔT, overpower ΔT, Low pressurizer pressure, "S", manual~~ PRHR discharge valve position	Low pressurizer pressure, low T_{cold}, low-2 pressurizer level	Core makeup tank

15.1.5.4.6 Doses

Using the assumptions from Table 15.1.5-1, the calculated total effective dose equivalent (TEDE) doses for the case with accident-initiated iodine spike are determined to be less than 1.1 rem at the site boundary for the limiting 2-hour interval (0 to 2 hours) and 2.0 rem at the low population zone outer boundary. These doses are small fractions of the dose guideline of 25 rem TEDE identified in 10 CFR Part 50.34. A "small fraction" is defined, consistent with the Standard Review Plan, as being 10 percent or less. The TEDE doses for the case with pre-existing iodine spike are determined to be less than 1.0 rem at the site boundary for the limiting 2-hour interval (0 to 2 hours) and 0.8 rem at the low population zone outer boundary. These doses are within the dose guidelines of 10 CFR Part 50.34.

At the time the main steam line break occurs, the potential exists for a coincident loss of spent fuel pool cooling with the result that the pool could reach boiling and a portion of the radioactive iodine in the spent fuel pool could be released to the environment. The loss of spent fuel pool cooling has been evaluated for a duration of 30 days. There is no contribution to the 2-hour site boundary dose because the pool boiling would not occur until after the first 2 hours. The 30-day contribution to the dose at the low population zone boundary is less than 0.01 rem TEDE. When this is added to the dose calculated for the main steam line break, the resulting total dose remains less than the values reported above.

15.1.6 Inadvertent Operation of the PRHR Heat Exchanger

15.1.6.1 Identification of Causes and Accident Description

The inadvertent actuation of the PRHR heat exchanger causes an injection of relatively cold water into the reactor coolant system. This produces a reactivity insertion in the presence of a negative moderator temperature coefficient. ~~The overpower/overtemperature protection functions (neutron overpower, overtemperature, and overpower ΔT trips) are intended to prevent a power increase which could lead to a DNBR less than the safety analysis limit. In addition, because the cold leg temperature is reduced which depressurizes the reactor coolant system during this event, the low cold leg temperature or low pressurizer pressure protection functions could generate a reactor trip. These protection functions do not terminate operation of the PRHR heat exchanger.~~To prevent this reactivity increase from causing reactor power increase, a reactor trip is initiated when either PRHR discharge valve comes off of its fully shut seat.

The inadvertent actuation of the PRHR heat exchanger could be caused by operator error or a false actuation signal, or by malfunction of a discharge valve. Actuation of the PRHR heat exchanger involves opening one of the isolation valves, which establishes a flow path from one reactor coolant system hot leg, through the PRHR heat exchanger, and back into its associated steam generator cold leg plenum.

The PRHR heat exchanger is located above the core to promote natural circulation flow when the reactor coolant pumps are not operating. With the reactor coolant pumps in operation, flow through the PRHR heat exchanger is enhanced. The heat sink for the PRHR heat exchanger is provided by the IRWST, in which the PRHR heat exchanger is submerged. Because the fluid in the heat exchanger is in thermal equilibrium with water in the tank, the initial flow out of the

PRHR heat exchanger is significantly colder than the reactor coolant system fluid. Following this initial insurge, the reduction in cold leg temperature is limited by the cooling capability of the PRHR heat exchanger. Because the PRHR heat exchanger is connected to only one reactor coolant system loop, the cooldown resulting from its actuation is asymmetric with respect to the core.

The response of the plant to an inadvertent PRHR heat exchanger actuation with the plant at no-load conditions is bounded by the analyses performed for the inadvertent opening of a steam generator relief or safety valve event (subsection 15.1.4) and the steam system piping failure event (subsection 15.1.5). Both of these events are conservatively analyzed assuming PRHR heat exchanger actuation coincident with the steam line depressurization. Therefore, only the response of the plant to an inadvertent PRHR initiation with the core at power is considered.

In meeting the requirements of GDC 17 of 10 CFR Part 50, Appendix A, ~~an analysis has been performed to evaluate~~ the effects ~~produced by~~ of a possible consequential loss of ~~offsite~~ ac power during ~~the~~ an inadvertent PRHR heat exchanger actuation event have been evaluated to not adversely impact the analysis results. ~~For the limiting case presented, reactor and turbine trips have been conservatively ignored. However, to address the loss of offsite power issue, an analysis has also been performed that assumes a reactor trip and an associated turbine trip occur at the time of peak power. This is conservative with respect to assessing the flow coastdown. Consistent with the discussion in subsection 15.0.14, the analysis then models a loss of offsite power occurring 3.0 seconds after the turbine trip. The primary effect of the loss of offsite power is to cause the reactor coolant pumps to coast down.~~ This conclusion is based on a review of the time sequence associated with a consequential loss of ac power in comparison to the reactor shutdown time for an inadvertent PRHR heat exchanger actuation event. The primary effect of the loss of ac power is to cause the reactor coolant pumps (RCPs) to coast down. The PMS includes a 5-second minimum delay between the reactor trip and the turbine trip. In addition, a 3-second delay between the turbine trip and the loss of offsite ac power is assumed, consistent with Section 15.1.3 of NUREG-1793. Considering these delays between the time of the reactor trip and RCP coastdown due to the loss of ac power, it is clear that the plant shutdown sequence will have passed the critical point and the control rods will have been completely inserted before the RCPs begin to coast down. Therefore, the consequential loss of ac power does not adversely impact this inadvertent PRHR heat exchanger actuation analysis because the plant will be shut down well before the RCPs begin to coast down.

The inadvertent actuation of the PRHR heat exchanger event is a Condition II event, a fault of moderate frequency. Plant systems and equipment available to mitigate the effects of the accident are discussed in subsection 15.0.8 and listed in Table 15.0.6. The following reactor protection system functions are available to provide protection in the event of an inadvertent PRHR heat exchanger actuation:

- PRHR discharge valve not closed
- ~~The o~~Overpower/overtemperature reactor trips (neutron flux and ΔT)
- Two out of four low pressurizer pressure signals

~~• Two out of four low T_{cold} signals in any one loop~~
~~• Two out of four low pressurizer level signals~~

Due to the potential consequences as a result of the reactivity excursion, a reactor trip has been designed so that upon an inadvertent PRHR actuation, a reactor trip will occur. This reactor trip is generated when either of the discharge valves is not closed. This ensures that the reactor will be tripped prior to a power increase due to the cold water injection.

15.1.6.2 Analysis of Effects and Consequences

Since a reactor trip is initiated as soon as the PRHR discharge valves are not fully closed, this event is essentially a reactor trip from the initial condition and requires no separate transient analysis.

~~15.1.6.2.1 Method of Analysis~~

~~The excessive heat removal due to an inadvertent PRHR heat exchanger actuation is primarily analyzed by using the digital computer code LOFTRAN (References 1 and 6). This code simulates a multiloop system, neutron kinetics, pressurizer, pressurizer safety valves, pressurizer spray, steam generator, and steam generator safety valves. The code computes pertinent plant variables including temperatures, pressures, and power level.~~

~~Analysis performed for inadvertent PRHR heat exchanger actuation including a primary coolant flow coastdown caused by the consequential loss of offsite power uses a combination of three computer codes for the DNBR analysis. First the LOFTRAN code is used to predict the nuclear power transient, the flow coastdown, the primary system pressure transient, and the primary coolant temperature transient. The FACTRAN code (Reference 5) is then used to calculate heat flux based on the nuclear power and flow from LOFTRAN. Finally, the VIPRE-01 code (see Section 4.4) is used to calculate DNBR during the transient, using the heat flux from FACTRAN and the flow from LOFTRAN.~~

~~The system is analyzed to demonstrate plant behavior for an inadvertent PRHR heat exchanger actuation due to an operator error or a false actuation signal that opens the valves that normally isolate the PRHR heat exchanger from the remainder of the reactor coolant system. Both full-power and zero-load conditions are considered. The analyses for the inadvertent opening of a steam generator relief or safety valve event (subsection 15.1.4) and the steam system piping failure event (subsection 15.1.5) bound the results for the zero-power inadvertent PRHR heat exchanger actuation transient.~~

~~The case considered in this section is the response of the plant to an inadvertent PRHR heat exchanger initiation with the core initially operating at full power. The reactivity insertion transient arising from the inadvertent actuation of the PRHR heat exchanger is calculated, including the following assumptions:~~

- ~~With the core at full power, the inadvertent PRHR heat exchanger actuation occurs at 10 seconds. The LOFTRAN code explicitly models the performance of the PRHR heat exchanger and the resulting cooldown transient experienced by the reactor coolant system.~~
- ~~A conservative model is used to predict the power excursion experienced by the core.~~

~~This includes the use of a negative moderator coefficient corresponding to the end-of-life rodded core. The variation of the coefficient with temperature and pressure is included in conjunction with a low-level of power feedback.~~

~~The core properties used in the LOFTRAN code for feedback calculations are generated by combining those in the sector nearest the loop with the PRHR system with those associated with the remaining sector. The resultant properties reflect a combination process that accounts for inlet plenum fluid mixing and a conservative weighing of the fluid properties from the coldest core sector.~~

~~To verify the conservatism of this method, the power predictions of the LOFTRAN point kinetics modeling are confirmed by comparison with detailed core analysis for the limiting conditions of the cases considered. This core analysis explicitly models the hypothetical core configuration (that is, nonuniform inlet temperatures, pressure, flow, and boron) and directly evaluates the total reactivity feedback including power, boron, and density redistribution in an integral fashion.~~

~~Comparison of the results from the detailed core analysis with the LOFTRAN predictions verify the overall conservatism of the methodology. The specific power, temperature, and flow conditions used to perform the DNB analysis are conservative.~~

- ~~The reactor trips on high neutron flux, overtemperature, and overpower ΔT trips are conservatively ignored for the case presented in Figures 15.1.6-1 through 15.1.6-8. The analysis demonstrates that the applicable safety analysis limits are met without a reactor trip being generated.~~

- ~~No credit is taken for the heat capacity of the reactor coolant system and steam generator thick metal in attenuating the resulting plant cooldown.~~

- ~~Control systems are assumed to function only if their operation results in more severe accident results. For the inadvertent PRHR heat exchanger actuation event, both cases with and without automatic rod control are considered.~~

~~In addressing the consequential loss of offsite power, a limiting case is analyzed that models a reactor trip and an associated turbine trip occurring at the time of peak power. Consistent with the discussion in subsection 15.0.14, the loss of offsite power then occurs 3.0 seconds after the turbine trip. The primary effect of the loss of offsite power is to cause the reactor coolant pumps to coast down.~~

~~Plant characteristics and initial conditions are further discussed in subsection 15.0.3. No single active failure prevents operation of the reactor protection system functions assumed in the analysis. A discussion of anticipated transients without scram considerations is presented in Section 15.8.~~

~~15.1.6.2.2 Results~~

~~The system responses to an inadvertent PRHR heat exchanger actuation at power event, with manual rod control and no reactor trip, are shown in Figures 15.1.6-1 through 15.1.6-8. The full power case with manual rod control results in the greatest power increase.~~

~~The inadvertent operation of the PRHR heat exchanger incident is an overpower transient for which the fuel temperature rises. Assuming a reactor trip does not occur, the plant reaches a new equilibrium condition at a higher power level corresponding to the increase in power demanded by the system. In the limiting case analyzed, the plant power stabilizes at about 108 percent of its nominal value.~~

~~Assuming the rod control system to be in automatic control results in a slightly less limiting transient because the control rods are inserted in response to a primary to secondary power mismatch. The results show the increase in nuclear power and ΔT associated with the inadvertent PRHR system actuation at full power. The DNBR does not drop below the design limit value (see Section 4.4).~~

~~Because the power level rises during the inadvertent PRHR heat exchanger initiation, the fuel temperatures will also rise until after reactor trip. The core heat flux lags behind the neutron flux response because of the fuel rod thermal time constant. The peak fuel temperature remains below the fuel melting temperature.~~

~~The transient results show that DNB does not occur at any time during the inadvertent PRHR heat exchanger actuation event. The ability of the primary coolant to remove heat from the fuel rods is therefore not reduced. The calculated sequence of events for this accident is shown in Table 15.1.2-1.~~

~~For the analysis performed modeling a loss of offsite power and the subsequent reactor coolant pump coastdown, the results show that the minimum DBNR is predicted to occur during the time period of the inadvertent PRHR heat exchanger actuation event prior to the time the flow coastdown begins. Therefore, the DNBR results provided in Figure 15.1.6-6 are bounding and the minimum DNBR during the flow coastdown remains well above the design limit defined in Section 4.4. Because the loss of offsite power is delayed for 3.0 seconds after the turbine trip signal, the RCCAs are inserted well into the core before the reactor coolant system flow coastdown begins. The resulting power reduction compensates for the reduced flow encountered once ac power to the reactor coolant pumps is lost.~~

~~Inadvertent operation of the PRHR heat exchanger is not included among the design overpower transients considered in subsection 4.3. The conservative safety analysis assumptions applied to this event do not credit a reactor trip to preclude the core power from rising above 118 percent of rated thermal power. The nature of this excessive cooldown transient dictates that the predicted power excursion is associated with very low core inlet temperatures, which partially offsets the penalties associated with the high power.~~

15.1.6.3 Conclusions

~~The results of the analysis show that the DNBRs encountered for an inadvertent actuation of the PRHR heat exchanger at power are above the design limit values. (The DNB design basis is described in Section 4.4.) The results for an inadvertent PRHR heat exchanger actuation initiated from zero load conditions are bounded by the inadvertent opening of a steam generator relief or safety valve event (subsection 15.1.4) and the steam system piping failure event (subsection 15.1.5).~~

Inadvertent actuation of the PRHR does not result in violation of the core thermal design limits (DNB and linear power generation) or RCS overpressure.

15.1.7 Combined License Information

This section has no requirement for additional information to be provided in support of the Combined License application.

15.1.8 References

1. Burnett, T. W. T., et al., "LOFTRAN Code Description," WCAP-7907-P-A (Proprietary), and WCAP-7907-A (Nonproprietary), April 1984.

2. Friedland, A. J., and Ray, S., "Revised Thermal Design Procedure," WCAP-11397-P-A (Proprietary) and WCAP-11397-A (Nonproprietary), April 1989.

3. Moody, F. S., "Transactions of the ASME, Journal of Heat Transfer," Figure 3, page 134, February 1965.

4. Wood, D. C., and Hollingsworth, S. D., "Reactor Core Response to Excessive Secondary Steam Releases," WCAP-9226 (Proprietary) and WCAP-9227 (Nonproprietary), January 1978.

5. Hargrove, H. G., "FACTRAN - A FORTRAN-IV Code for Thermal Transients in a UO_2 Fuel Rod," WCAP-7908-A, December 1989.

6. "AP1000 Code Applicability Report," WCAP-15644-P (Proprietary) and WCAP-15644-NP (Nonproprietary), Revision 2, March 2004.

Table 15.1.2-1 (Sheet 1 of 2)

TIME SEQUENCE OF EVENTS FOR INCIDENTS THAT RESULT IN AN INCREASE IN HEAT REMOVAL FROM THE PRIMARY SYSTEM

Accident	Event	Time (seconds)
Excessive increase in secondary steam flow		
– Manual reactor control (minimum moderator feedback)	10-percent step load increase	0.0
	Equilibrium conditions reached (approximate time only)	250.0
– Manual reactor control (maximum moderator feedback)	10-percent step load increase	0.0
	Equilibrium conditions reached (approximate time only)	70.0
– Automatic reactor control (minimum moderator feedback)	10-percent step load increase	0.0
	Equilibrium conditions reached (approximate time only)	125.0
– Automatic reactor control (maximum moderator feedback)	10-percent step load increase	0.0
	Equilibrium conditions reached (approximate time only)	50.0
Feedwater system malfunctions that result in an increase in feedwater flow	One main feedwater control valve fails fully open	0.0
	Turbine trip/feedwater isolation and reactor trip on high steam generator level	201.9
	Rod motion begins	203.9
	Loss of offsite power occurs	204.9
	Minimum DNBR occurs	205.8
Inadvertent operation of the PRHR	~~Inadvertent actuation of PRHR~~	~~10.0~~
	~~Minimum DNBR occurs~~	~~22.0~~
	~~Equilibrium conditions reached (approximate time only)~~PRHR discharge valves go fully open	~~100.0~~0.0
	Reactor trip setpoint reached	0.0
	Rod motion begins	1.25
	Rods fully inserted	3.95

~~PRHR Heat Transfer Transient~~

~~Inadvertent Operation of the PRHR~~Figures 15.1.6-1 through 15.1.6-8 deleted.

BASES

APPLICABLE SAFETY ANALYSES (continued)

c. Rod ejection~~;~~.

~~d. Inadvertent operation of Passive Residual Heat Removal Heat Exchanger (PRHR HX).~~

Each of these events is discussed below.

In the boron dilution analysis, the required SDM defines the reactivity difference between an initial subcritical boron concentration and the corresponding critical boron concentration. These values, in conjunction with the configuration of the RCS and the assumed dilution flow rate, directly affect the results of the analysis. This event is most limiting when critical boron concentrations are highest.

The uncontrolled rod withdrawal transient is terminated by a high neutron flux trip. Power level, RCS pressure, linear heat rate, and the DNBR do not exceed allowable limits.

The ejection of a control rod rapidly adds reactivity to the reactor core, causing both the core power level and heat flux to increase with corresponding increases in reactor coolant temperatures and pressure. The ejection of a rod also produces a time-dependent redistribution of core power.

~~The inadvertent actuation of the PRHR HX causes an RCS temperature reduction from an initial injection of relatively cold water and the continued cooling of the RCS by PRHR. In the presence of a negative moderator temperature coefficient, the RCS temperature reduction causes an increase in core reactivity. Safety injection on the low cold leg temperature or low pressurizer pressure signals actuate the core makeup tank (CMT) and bring the plant to a stable condition.~~

SDM satisfies Criterion 2 of 10 CFR 50.36(c)(2)(ii). Even though it is not directly observed from the main control room, SDM is considered an initial condition process variable because it is periodically monitored to provide assurance that the unit is operating within the bounds of accident analysis assumptions.

LCO

SDM is a core design condition that can be ensured during operation through calculations by the Online Power Distribution Monitoring System (OPDMS) and RCCA positioning and through the soluble boron concentration.

Table 3.3.1-1 (page 4 of ~~4~~5)
Reactor Trip System Instrumentation

FUNCTION	APPLICABLE MODES OR OTHER SPECIFIED CONDITIONS	REQUIRED CHANNELS	CONDITIONS	SURVEILLANCE REQUIREMENTS
21. Core Makeup Tank Actuation input from engineered safety feature actuation system				
a. Manual	1,2	2 switch sets	B	SR 3.3.1.12~~1~~
	3[(j)],4[(j)],5[(j)]	2 switch sets	B	SR 3.3.1.12~~1~~
b. Automatic	1,2	4	L	SR 3.3.1.7
	3[(j)],4[(j)],5[(j)]	4	P	SR 3.3.1.7
22. Passive Residual Heat Removal Actuation	1,2	4 per valve	E	SR 3.3.1.10 SR 3.3.1.11 SR 3.3.1.12

(j) With Reactor Trip Breakers closed and Plant Control System capable of rod withdrawal.

~~Table 3.3.1-1 (page 5 of 5)~~
~~Reactor Trip System Instrumentation~~

~~Note 1: Overtemperature ΔT~~

~~The ΔT power signal, $q_{\Delta T}$, shall not be less than the measured reactor thermal power by more than 1% of RTP, where the ΔT power signal, $q_{\Delta T}$, is computed as~~

$$q_{\Delta T} = \rho(T_C, P_{PZR})\,[h(T_H, P_{PZR}) - h(T_C, P_{PZR})]/\Delta T^{\circ}$$

~~where:~~

~~T_C = $[(1 + T_1 s)/(1 + T_2 s)]\,T_{COLD}$, where T_{COLD} is the measured cold leg temperature, °F, with lead/lag compensation applied to compensate for cold leg-to-core transit time~~

~~T_H = $[(1 + T_3 s)/(1 + T_4 s)]\,T_{HOT}$, where T_{HOT} is the measured hot leg temperature, °F, with lead/lag compensation applied to compensate for core-to-hot leg transit time~~

~~$T_1 \geq$ [*] sec $T_2 \leq$ [*] sec~~
~~$T_4 \geq$ [*] sec $T_5 \leq$ [*] sec~~

~~$\rho(T_C, P_{PZR})$ = density of water at the measured cold leg temperature in the cold leg (T_C), °F, and measured pressurizer pressure, P_{PZR}, psia~~

~~$h(T, P_{PZR})$ = enthalpy of water at the specified measured temperature (T_H or T_C) and measured pressurizer pressure, P_{PZR}, psia~~

~~ΔT° = a conversion factor, such that the value of $q_{\Delta T}$ is 100 percent at normal rated thermal power~~

~~s = Laplace transform operator~~

~~And the Overtemperature ΔT setpoint shall not exceed the following nominal Trip Setpoint by more than 0.2% of RTP for T_{HOT}; 0.2% of RTP for T_{COLD}; 0.06% of RTP for pressure; and 0.14% of RTP for ΔI.~~

$$OT\Delta T_{SP} = OT\Delta T^{\circ}_{SP} - f_1(\Delta I)$$

~~where:~~

BASES

APPLICABLE SAFETY ANALYSES, LCOs, and APPLICABILITY (continued)

The LCO requires four divisions of RTS Automatic Trip Logic to be OPERABLE. Four OPERABLE divisions are provided to ensure that a random failure of a single logic channel will not prevent reactor trip.

These trip Functions must be OPERABLE in MODE 1 or 2 when the reactor is critical. In MODE 3, 4, or 5, these RTS trip Functions must be OPERABLE when the RTBs are closed and the PLS is capable of rod withdrawal.

20. ADS Stages 1, 2 and 3 Actuation Input from Engineered Safety Feature Actuation System

The LCO requirement for this Function provides a reactor trip for any event that may initiate depressurization of the reactor.

The LCO requires four divisions of RTS Automatic Trip Logic to be OPERABLE. Four OPERABLE divisions are provided to ensure that a random failure of a single logic channel will not prevent reactor trip.

These trip Functions must be OPERABLE in MODE 1 or 2 when the reactor is critical. In MODE 3, 4, or 5, these RTS trip Functions must be OPERABLE when the RTBs are closed and the PLS is capable of rod withdrawal.

21. Core Makeup Tank (CMT) Actuation Input from Engineered Safety Feature Actuation System

The LCO requirement for this Function provides a reactor trip for any event that may initiate CMT injection.

The LCO requires four divisions of RTS Automatic Trip Logic to be OPERABLE. Four OPERABLE divisions are provided to ensure that random failure of a single logic channel will not prevent reactor trip.

These trip Functions must be OPERABLE in MODES 1 and 2 when the reactor is critical. In MODE 3, 4, and 5 these RTS trip Functions must be OPERABLE when the RTBs are closed and the PLS is capable of rod withdrawal.

22. Passive Residual Heat Removal Actuation

The Passive Residual Heat Removal (PRHR) Actuation reactor trip ensures that a reactivity excursion due to cold water injection will be minimized upon an inadvertent operation of the PRHR discharge valves. The two discharge valves for the PRHR HX are monitored by PMS using valve position indicators as inputs into PMS.

BASES

APPLICABLE SAFETY ANALYSES, LCOs, and APPLICABILITY (continued)

The LCO requires four channels of PRHR discharge valve position indication per valve to be OPERABLE in MODES 1 and 2. Four channels are provided to permit one channel in trip or bypass indefinitely and still ensure no single random failure will disable this trip Function.

In MODES 1 and 2, the Passive Heat Removal Actuation reactor trip must be OPERABLE. In MODES 3, 4, 5, and 6, the Passive Heat Removal Initiation reactor trip Function does not have to be OPERATIONAL because the reactor is not operating or critical.

The RTS instrumentation satisfies Criterion 3 of 10 CFR 50.36(c)(2)(ii).

~~A Note has been added in the ACTIONS to clarify the application of Completion Time rules. The Conditions of this Specification may be entered independently for each Function listed on Table 3.3.1-1.~~

ACTIONS

A Note has been added in the ACTIONS to clarify the application of Completion Time rules. The Conditions of this Specification may be entered independently for each Function listed on Table 3.3.1-1.

In the event a channel's as-found condition is outside the as-found tolerance described in the SP, or the channel is not functioning as required, or the transmitter, instrument loop, signal processing electronics, or trip output is found inoperable, then all affected Functions provided by that channel must be declared inoperable and the LCO Condition(s) entered for the protection Function(s) affected.

When the number of inoperable channels in a trip Function exceeds those specified in one or other related Conditions associated with a trip Function, then the plant is outside the safety analysis. Therefore, LCO 3.0.3 must be immediately entered if applicable in the current MODE of operation.

A.1

Condition A applies to all RTS protection Functions. Condition A addresses the situation where one or more required channels for one or more Functions are inoperable at the same time. The Required Action is to refer to Table 3.3.1-1 and to take the Required Actions for the protection Functions affected. The Completion Times are those from the referenced Conditions and Required Actions.

B.1, B.2.1, and B.2.2

Condition B applies to the Manual Reactor Trip, Manual Safeguards Actuation, Manual ADS Stages 1, 2, and 3 Actuation and Manual Core

BASES

ACTIONS (continued)

E.1.1, E.1.2, and E.2

Condition E applies to the following reactor trip Functions:

- Power Range Neutron Flux – Low;
- Overtemperature ΔT;
- Overpower ΔT;
- Power Range Neutron Flux – High Positive Rate;
- Pressurizer Pressure – High;
- RCP Bearing Water Temperature – High;
- SG Water Level – Low; ~~and~~
- SG Water Level – High 2~~.~~; and
- Passive Residual Heat Removal Actuation.

With one or two channels inoperable, one affected channel must be placed in a bypass or trip condition within 6 hours. If one channel is bypassed, the logic becomes two-out-of-three, while still meeting the single failure criterion. (A failure in one of the three remaining channels will not prevent the protective function.) If one channel is tripped, the logic becomes one-out-of-three, while still meeting the single failure criterion. (A failure in one of the three remaining channels will not prevent the protective function.) If one channel is bypassed and one channel is tripped, the logic becomes one-out-of-two, while still meeting the single failure criterion. The 6 hours allowed to place the inoperable channel(s) in the bypassed or tripped condition is justified in Reference 7.

If the Required Actions described above cannot be met within the specified Completion Times, the unit must be placed in a MODE where this Function is no longer required to be OPERABLE. An additional 6 hours is allowed to place the unit in MODE 3. Six hours is a reasonable time, based on operating experience, to reach MODE 3 from full power in an orderly manner and without challenging plant systems.

BASES

SURVEILLANCE REQUIREMENTS (continued)

where applicable.

SR 3.3.1.1~~10~~

SR 3.3.1.1~~10~~ is the performance of a CHANNEL CALIBRATION every 24 months. This SR is modified by a Note stating that neutron detectors are excluded from the CHANNEL CALIBRATION. The test is performed in accordance with the SP. If the actual setting of the channel is found to be outside the as-found tolerance, the channel is considered inoperable.

This condition of the channel will be further evaluated during performance of the SR. This evaluation will consist of resetting the channel setpoint to the NTS (within the allowed tolerance), and evaluating the channel's response. If the channel is functioning as required and is expected to pass the next surveillance, then the channel is OPERABLE and can be restored to service at the completion of the surveillance. After the surveillance is completed, the channel as-found condition will be entered into the Corrective Action Program for further evaluation.

The CHANNEL CALIBRATION for the power range neutron detectors consists of a normalization of the detectors based on a power calorimetric and flux map performed above 20% RTP. Below 20% RTP, the design of the incore detector system, low core power density, and detector accuracy make use of the incore detectors inadequate for use as a reference standard for comparison to the excore channels. The CHANNEL CALIBRATION for the source range and intermediate range neutron detectors consists of obtaining the detector plateau or preamp discriminator curves, evaluating those curves, and comparing the curves to the manufacturer's data. This Surveillance is not required for the power range detectors for entry into MODES 2 and 1, and is not required for the intermediate range detectors for entry into MODE 2, because the plant must be in at least MODE 2 to perform the test for the intermediate range detectors and MODE 1 for the power range detectors.

The 24 month Frequency is based on the need to perform this Surveillance under the conditions that apply during a plant outage and the potential for an unplanned transient if the Surveillance were performed with the reactor at power. Operating experience has shown these components usually pass the Surveillance when performed on the 24 month Frequency.

SR 3.3.1.1~~21~~

SR 3.3.1.1~~21~~ is the performance of a TADOT of the Manual Reactor Trip, and the SI, ADS Actuation, ~~and~~ CMT Injection inputs from the ESF logic, and Passive Residual Heat Removal Actuation. This TADOT is performed

Change Number 61

15.4.3.2.1.2 Results

- One or more dropped RCCAs

  Figures 15.4.3-1 through 15.4.3-4 show the transient response of the reactor to a dropped rod (or rods) in automatic control. The nuclear power and heat flux drop to a minimum value and recover under the influence of both rod withdrawal and thermal feedback. The prompt decrease in power is governed by the dropped rod worth because the plant control system does not respond during the short rod drop time period. The plant control system detects the reduction in core power and initiates control bank withdrawal to restore the primary side power. Power overshoot occurs after which the core power is restored to the initial power level.

  The primary system conditions are combined with the hot channel factors from the nuclear analysis for the DNB evaluation. Uncertainties in the initial conditions are included in the DNB evaluation as discussed in subsection 15.0.3.2. The calculated minimum DNBR for the limiting case for any single or multiple rod drop from the same group is greater than the design limit value described in Section 4.4. The sequence of events for ~~this limiting~~ a representative case is shown in Table 15.4-1.

  The analysis described previously includes consideration of drops of the RCCA groups which can be selected for insertion as part of the rapid power reduction system. This system is provided to allow the reactor to ride out a complete loss of load from full power without a reactor trip and is described in subsection 7.7.1.10. If these RCCAs are inadvertently dropped (in the absence of a loss-of-load signal), the transient behavior is the same as for the RCCA drop described. The evaluation showed that the DNBR remains above the design limit value as a result of the inadvertent actuation of the rapid power reduction system.

  The consequential loss of offsite power described in subsection 15.0.14 is not limiting for the dropped RCCA event. Due to the delay from reactor trip until turbine trip and the rapid power reduction produced by the reactor trip, the minimum DNBR occurs before the reactor coolant pumps begin to coast down.

- Statically misaligned RCCA

  The most severe misalignment situations with respect to DNBR arise from cases in which one RCCA is fully inserted, or where the mechanical shim or axial offset rod banks are inserted up to their insertion limit with one RCCA fully withdrawn while the reactor is at full power. Multiple independent alarms, including a bank insertion limit or rod deviation alarm, alert the operator well before the postulated conditions are approached.

  For RCCA misalignments in which the mechanical shim or axial offset banks are inserted to their respective insertion limits, with any one RCCA fully withdrawn, the DNBR remains above the safety analysis limit value. This case is analyzed assuming the initial reactor power, pressure, and reactor coolant system temperature are at their nominal values, but with the increased radial peaking factor associated with the misaligned RCCA. Uncertainties in the initial conditions are included in the DNB evaluation as described in subsection 15.0.3.2.

Table 15.4-1 (Sheet 1 of 3)

TIME SEQUENCE OF EVENTS FOR INCIDENTS WHICH RESULT IN REACTIVITY AND POWER DISTRIBUTION ANOMALIES

Accident	Event	Time (seconds)
Uncontrolled RCCA bank withdrawal from a subcritical or low-power startup condition	Initiation of uncontrolled rod withdrawal from 10^{-9} of nominal power	0.0
	Power range high neutron flux (low setting) setpoint reached	10.4
	Peak nuclear power occurs	10.6
	Rods begin to fall into core	11.3
	Peak heat flux occurs	12.7
	Minimum DNBR occurs	12.7
	Peak average clad temperature occurs	13.3
	Peak average fuel temperature occurs	13.4
One or more dropped RCCAs	Rods drop	0.0
	Control system initiates control bank withdrawal	0.4
	Peak nuclear power occurs	~~274.9~~21.7
	~~Minimum DNBR~~ Peak core heat flux occurs	~~277.9~~24.2
Uncontrolled RCCA bank withdrawal at power		
1. Case A	Initiation of uncontrolled RCCA withdrawal at a high-reactivity insertion rate (75 pcm/s)	0.0
	Power range high neutron flux high trip point reached	6.6
	Rods begin to fall into core	7.5
	Minimum DNBR occurs	7.7
	Loss of ac power occurs	10.2
2. Case B	Initiation of uncontrolled RCCA withdrawal at a small reactivity insertion rate (3 pcm/s)	0.0
	Overtemperature ΔT setpoint reached	508.1
	Rods begin to fall into core	510.1
	Minimum DNBR occurs	510.4
	Loss of ac power occurs	512.8

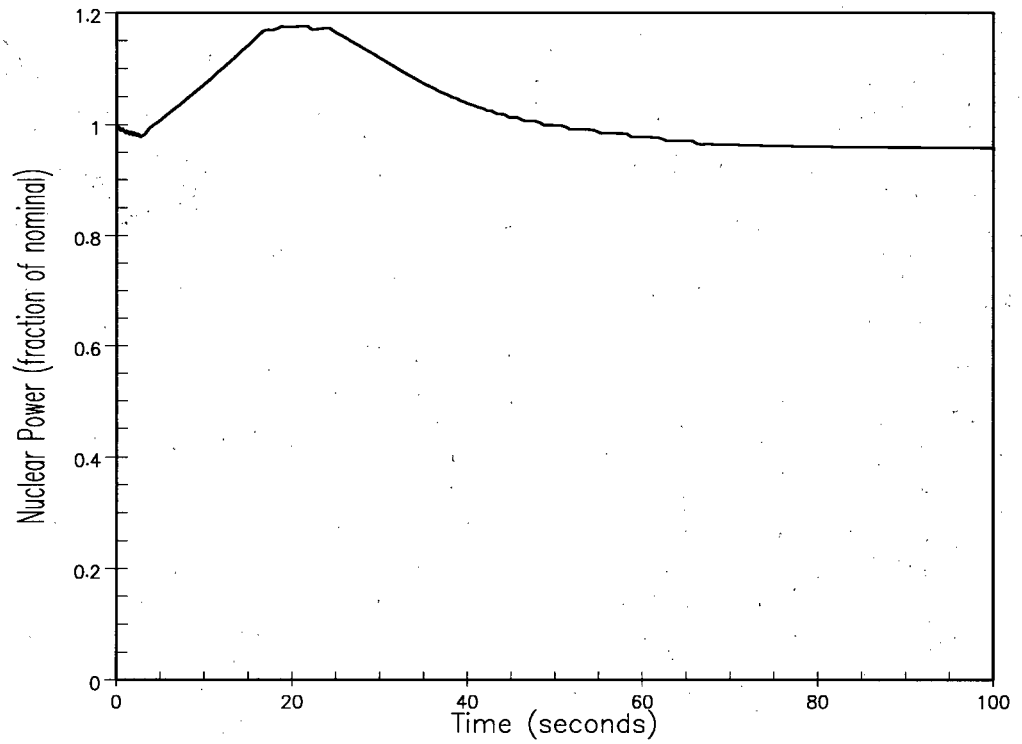

Figure 15.4.3-1

Nuclear Power Transient for Dropped RCCA

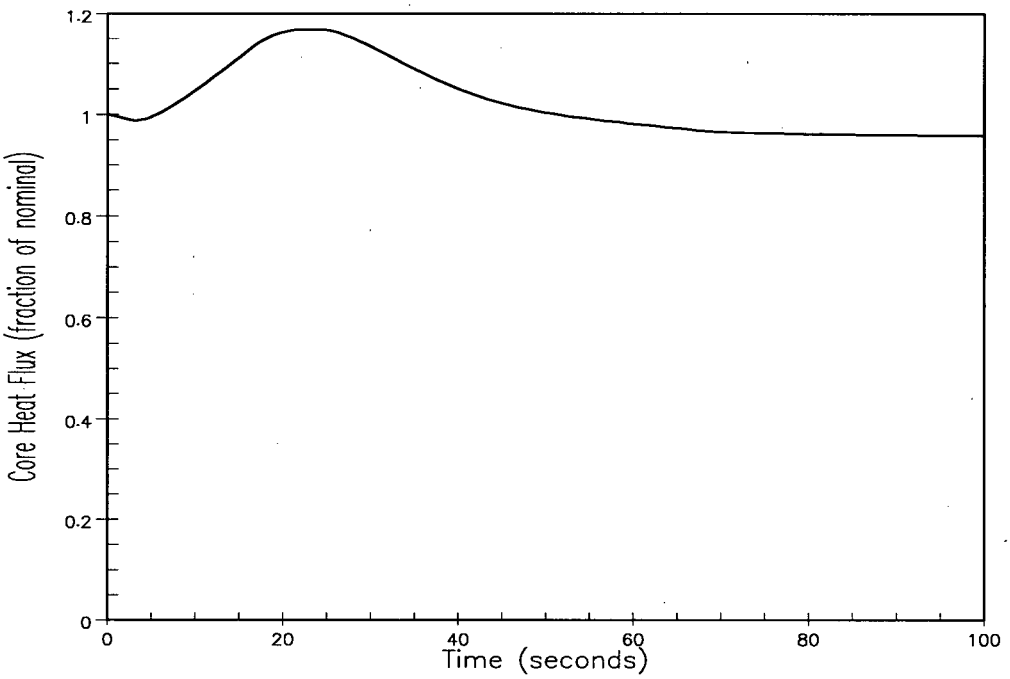

Figure 15.4.3-2

Core Heat Flux Transient for Dropped RCCA

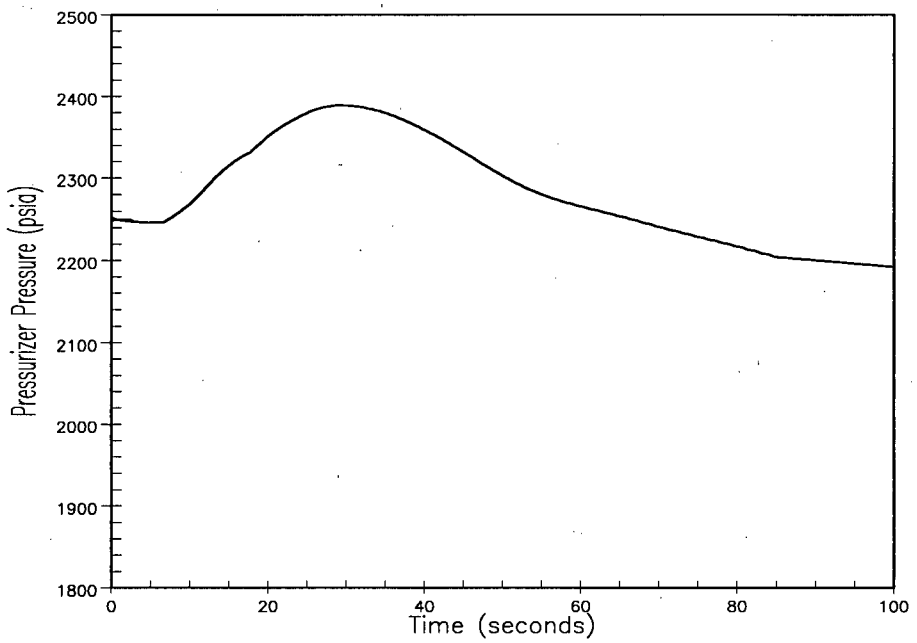

Figure 15.4.3-3

~~Reactor Coolant System~~ Pressurizer Pressure Transient for Dropped RCCA

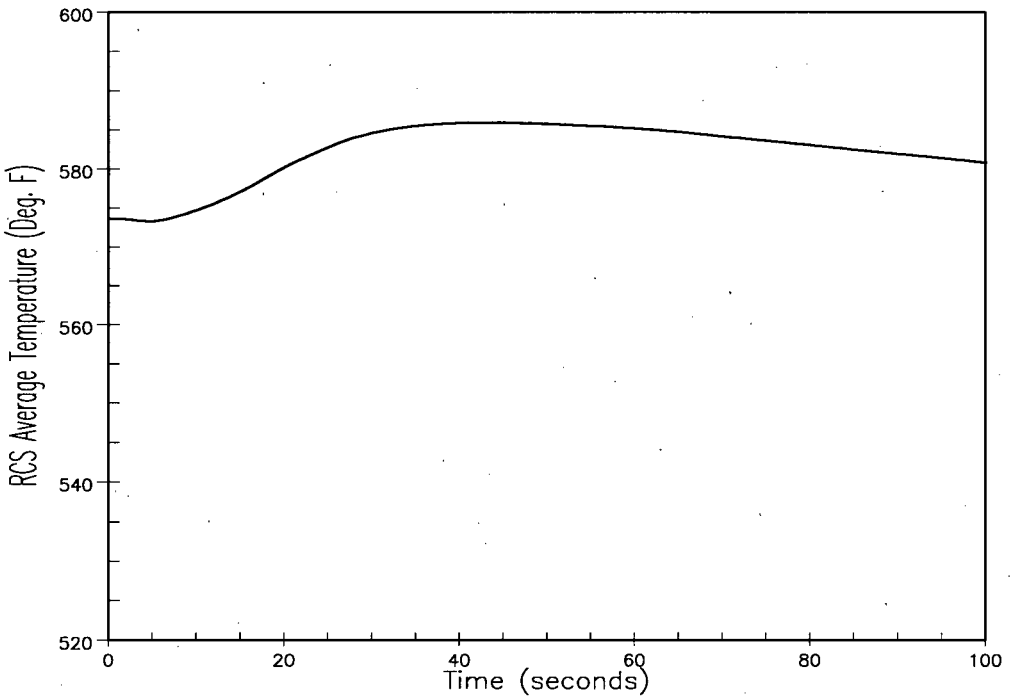

Figure 15.4.3-4

RCS Average Temperature Transient for Dropped RCCA

Change Number 62

The containment internal structures are designed using reinforced concrete and structural steel. At the lower elevations conventional concrete and reinforcing steel are used, except that permanent steel forms are used in some areas in lieu of removable forms based on constructibility considerations. These steel form modules (liners) consist of plate reinforced with angle stiffeners and tee sections, as shown in Figure 3.8.3-16. The angles and the tee sections are on the concrete side of the plate. Welded studs, or similar embedded steel elements, are attached on the concrete face of the permanent steel form where surface attachments transfer loads into the concrete. Where these surface attachments are seismic Category I, the portion of the steel form module transferring the load into the concrete is classified as seismic Category I.

Walls and floors are concrete filled steel plate structural modules. The walls are supported on the mass concrete containment internal structures basemat with the steel surface plate extending down to the concrete floor on each side of the wall. The steel surface plates of the structural modules provide reinforcement in the concrete. The structural modules are anchored to the base concrete by mechanical connections welded to the steel plate or by lap splices where the reinforcement overlaps shear studs on the steel plate as shown in Figure 3.8.3-8. Figure 3.8.3-1 shows the location of the structural modules. Figures 3.8.3-2 and 3.8.3-15 show the typical structural configuration of the wall modules. A typical floor module is shown in Figure 3.8.3-3 and also in Figure 3.8.3-16 combined with the liner module. These structural modules are structural elements built up with welded steel structural shapes and plates. Concrete is used where required for shielding, but reinforcing steel is not normally used.

Walls and floors exposed to water during normal operation or refueling are constructed using stainless steel plates.

3.8.3.1.1 Reactor Coolant Loop Supports

3.8.3.1.1.1 Reactor Vessel Support System

The reactor vessel is supported by four supports located under the cold legs, which are spaced 90 degrees apart in the primary shield wall. The supports are designed to provide for radial thermal growth of the reactor coolant system, including the reactor vessel, but they prevent the vessel from lateral and torsional movement. The loads are carried by the reactor vessel supports to embedded steel ~~plates of the CA-04 structural module which forms the inside face of the primary shield concrete~~ structures and anchor bolts. Figure 3.8.3-4 shows the reactor vessel supports. ~~Sheet 4 of Figure 3.8.3-14 shows the CA-04 structural module.~~

3.8.3.1.1.2 Steam Generator Support System

The steam generator vertical support consists of a single vertical column extending from the steam generator compartment floor to the bottom of the steam generator channel head. The column is constructed of heavy plate sections and is pinned at both ends to permit unrestricted radial displacement of the steam generator during plant heatup and cooldown. The location of this column is such that it will allow full access to the steam generator for routine maintenance activities. It is located a sufficient distance away from the reactor coolant pump motors to permit pump maintenance and in-service inspection.

The internal steel framing is designed according to the AISC Specification for the Design, Fabrication and Erection of Steel Safety Related Structures for Nuclear Facilities, AISC-N690, supplemented by the requirements given in subsection 3.8.4.5.

The secondary shield walls, in-containment refueling water storage tank, refueling cavity, and operating floor above the in-containment refueling water storage tank are designed using structural modules. Concrete-filled structural wall modules are designed as reinforced concrete structures in accordance with the requirements of ACI-349, as supplemented in the following paragraphs. Structural floor modules are designed as composite structures in accordance with AISC-N690.

Methods of analysis used are based on accepted principles of structural mechanics and are consistent with the geometry and boundary conditions of the structures.

The methods described in subsection 3.7.2 are employed to obtain the safe shutdown earthquake loads at various locations in the containment internal structures. The safe shutdown earthquake loads are derived from the equivalent static analysis of a three-dimensional, finite element model representing the entire containment internal structures.

The determination of pressure and temperature loads due to pipe breaks is described in subsections 3.6.1 and 6.2.1.2. Subcompartments inside containment containing high energy piping are designed for a pressurization load of 5 psi. The pipe tunnel in the CVS room (room 11209, Figure 1.2-6) is designed for a pressurization load of 7.5 psi. These subcompartment design pressures bound the pressurization effects due to postulated breaks in high energy pipe. The design for the effects of postulated pipe breaks is performed as described in subsection 3.6.2. Determination of pressure loads resulting from actuation of the automatic depressurization system is described in subsection 3.8.3.3.1.

Determination of reactor coolant loop support loads is described in subsection 3.9.3. Design of the reactor coolant loop supports within the jurisdiction of ASME Code, Section III, Division 1, Subsection NF is described in subsections 3.9.3 and 5.4.10.

Computer codes used are general purpose codes. The code development, verification, validation, configuration control, and error reporting and resolution are according to the Quality Assurance requirements of Chapter 17.

3.8.3.5.1 Reactor Coolant Loop Supports

3.8.3.5.1.1 Reactor Vessel Support System

The embedded portions of the reactor vessel supports, which are outside the ASME jurisdictional boundary, are designed by elastic methods of analysis. Note the embedded anchor bolts are within the ASME jurisdictional boundary. They are analyzed and designed to resist the applicable loads and load combinations given in subsection 3.8.4.3. The design is according to AISC-N690 and ACI-349. ~~Figure 3.8.3-4 shows the jurisdictional boundaries.~~

The supports-to-concrete attachments are either brackets welded to heavy embedded plates or anchor bolts or are embedded fabricated assemblies.

The supports permit thermal growth of the supported systems but restrain vertical and lateral movement resulting from seismic and pipe-break loadings. This is accomplished by using pinned ends in the vertical support columns, girders, bumper pedestals, and hydraulic snubbers, and lateral struts.

Because of manufacturing and construction tolerances, ample adjustment for the support structures provides proper erection alignment and fit-up. This is accomplished by shimming or grouting at the supports-to-concrete interface and by shimming at the supports-to-equipment interface.

The supports for the various components are described in the following paragraphs.

5.4.10.2.1 Reactor Pressure Vessel

The reactor vessel supports consist of four individual, air-cooled steel box structures located beneath the inlet nozzles (See Figure 3.8.3-4). The boxes are air-cooled to achieve a concrete design temperature of 200°F. To reduce heat transfer from the nozzle to the concrete, cooled air is baffled vertically through the support, and the heated air is vented at the top.

Vertical and horizontal loads are transmitted from the reactor vessel nozzle pad to the box structure through an integral ~~"shoe" machined into~~ recessed "pocket" at the top of the box. The nozzle pad bears on permanently lubricated wear plates that allow radial thermal movements of the nozzle with minimal friction resistance to the movement. The vessel support boxes transfer loads from the reactor pressure vessel to vertical and horizontal embedments in the primary shield wall concrete.

5.4.10.2.2 Steam Generator

As shown in Figure 3.8.3-5, each steam generator support consists of the following:

Vertical Support

The vertical support consists of a single vertical column extending from the steam generator compartment floor to the bottom of each steam generator channel head. The column is constructed of a heavy wide flange section, and is pinned at both ends to permit thermal movement of each steam generator during plant heatup and cooldown. The column is located so that it allows full access to the steam generator for routine maintenance activities. It is located far enough from the reactor coolant pump motors to permit pump maintenance and inservice inspection.

Lower Lateral Support

The lower horizontal support is located at the bottom of the channel head. It consists of a tension/compression strut oriented nearly perpendicular to the hot leg. The strut is pinned at both the wall bracket and the steam generator channel head to permit movement of the steam generator during plant heatup and cooldown.

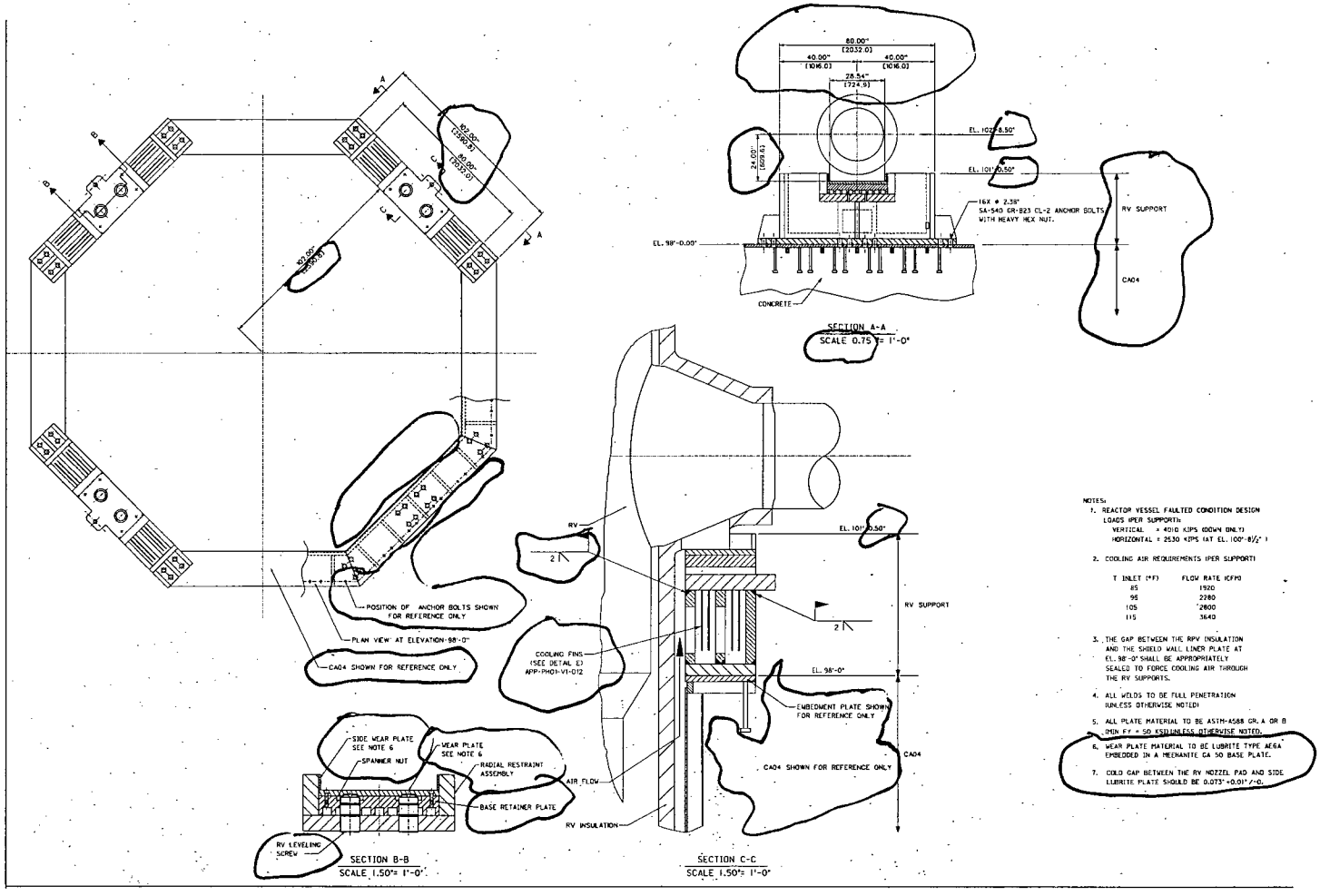

Figure 3.8.3-4

Reactor Vessel Supports

Change Number 63

2.5 Instrumentation and Control Systems

2.5.1 Diverse Actuation System

Design Description

The diverse actuation system (DAS) initiates reactor trip, actuates selected functions, and provides plant information to the operator.

The component locations of the DAS are as shown in Table 2.5.1-5.

1. The functional arrangement of the DAS is as described in the Design Description of this Section 2.5.1.

2. The DAS provides the following non-safety-related functions:

   a) The DAS provides an automatic reactor trip on low wide-range steam generator water level, or on low pressurizer water level, or on high hot leg temperature, separate from the PMS.

   b) The DAS provides automatic actuation of selected functions, as identified in Table 2.5.1-1, separate from the PMS.

   c) The DAS provides manual initiation of reactor trip and selected functions, as identified in Table 2.5.1-2, separate from the PMS. These manual initiation functions are implemented in a manner that bypasses the control room multiplexers, if any; the PMS cabinets; and the signal processing equipment of the DAS.

   d) The DAS provides main control room (MCR) displays of selected plant parameters, as identified in Table 2.5.1-3, separate from the PMS.

3. The DAS has the following features:

   a) The signal processing hardware of the DAS uses input modules, output modules, and microprocessor or special purpose logic processor boards that are different than those used in the PMS.

   b) The display hardware of the DAS uses a different display device than that used in the PMS.

   c) Any operating systems or programming languages used by DAS are different than those used in the PMS.

   d) The DAS has electrical surge withstand capability (SWC), and can withstand the electromagnetic interference (EMI), radio frequency (RFI), and electrostatic discharge (ESD) conditions that exist where the DAS equipment is located in the plant.

   e) The sensors identified on Table 2.5.1-3 are used for DAS input and are separate from those being used by the PMS and plant control system.

Table 2.5.1-1
Functions Automatically Actuated by the DAS

1. Reactor and Turbine Trip on Low Wide-range Steam Generator Water Level or Low Pressurizer Water Level or High Hot Leg Temperature
2. Passive Residual Heat Removal (PRHR) Actuation and In-containment Refueling Water Storage Tank (IRWST) Gutter Isolation on Low Wide-range Steam Generator Water Level or on High Hot Leg Temperature
3. Core Makeup Tank (CMT) Actuation and Trip All Reactor Coolant Pumps on Low Wide-Range Steam Generator Water Level or Low Pressurizer Water Level
4. Isolation of Selected Containment Penetrations and Initiation of Passive Containment Cooling System (PCS) on High Containment Temperature

Table 2.5.1-2
Functions Manually Actuated by the DAS

1. Reactor and Turbine Trip
2. PRHR Actuation and IRWST Gutter Isolation
3. CMT Actuation and Trip All Reactor Coolant Pumps
4. First-stage Automatic Depressurization System (ADS) Valve Actuation
5. Second-stage ADS Valve Actuation
6. Third-stage ADS Valve Actuation
7. Fourth-stage ADS Valve Actuation
8. PCS Actuation
9. Isolation of Selected Containment Penetrations
10. Containment Hydrogen Ignitor Actuation
11. IRWST Injection Actuation
12. Containment Recirculation Actuation
13. Actuate IRWST Drain to Containment

Table 2.5.1-3
DAS Sensors and Displays

Equipment Name	Tag Number
Reactor Coolant System (RCS) Hot Leg Temperature	RCS-300A
RCS Hot Leg Temperature	RCS-300B
Steam Generator 1 Wide-range Level	SGS-044
Steam Generator 1 Wide-range Level	SGS-045
Steam Generator 2 Wide-range Level	SGS-046
Steam Generator 2 Wide-range Level	SGS-047
Pressurizer Water Level	RCS-305A
Pressurizer Water Level	RCS-305B
Containment Temperature	VCS-053A
Containment Temperature	VCS-053B
Core Exit Temperature	IIS-009
Core Exit Temperature	IIS-013
Core Exit Temperature	IIS-030
Core Exit Temperature	IIS-034
Rod Control Motor Generator Voltage	PLS-ET001
Rod Control Motor Generator Voltage	PLS-ET002

Table 2.5.1-4
Inspections, Tests, Analyses, and Acceptance Criteria

Design Commitment	Inspections, Tests, Analyses	Acceptance Criteria
1. The functional arrangement of the DAS is as described in the Design Description of this Section 2.5.1.	Inspection of the as-built system will be performed.	The as-built DAS conforms with the functional arrangement as described in the Design Description of this Section 2.5.1.
2.a) The DAS provides an automatic reactor trip on low wide-range steam generator water level, or on low pressurizer water level, or on high hot leg temperature, separate from the PMS.	Electrical power to the PMS equipment will be disconnected and an operational test of the as-built DAS will be performed using real or simulated test signals.	The field breakers of the control rod motor-generator sets open after the test signal reaches the specified limit.
2.b) The DAS provides automatic actuation of selected functions, as identified in Table 2.5.1-1, separate from the PMS.	Electrical power to the PMS equipment will be disconnected and an operational test of the as-built DAS will be performed using real or simulated test signals.	Appropriate DAS output signals are generated after the test signal reaches the specified limit.
2.c) The DAS provides manual initiation of reactor trip, and selected functions, as identified in Table 2.5.1-2, separate from the PMS. These manual initiation functions are implemented in a manner that bypasses the control room multiplexers, if any; the PMS cabinets; and the signal processing equipment of the DAS.	Electrical power to the control room multiplexers, if any, and PMS equipment will be disconnected and the outputs from the DAS signal processing equipment will be disabled. While in this configuration, an operational test of the as-built system will be performed using the DAS manual actuation controls.	i) The field breakers of the control rod motor-generator sets open after reactor and turbine trip manual initiation controls are actuated. ii) DAS output signals are generated for the selected functions, as identified in Table 2.5.1-2, after manual initiation controls are actuated.
2.d) The DAS provides MCR displays of selected plant parameters, as identified in Table 2.5.1-3, separate from the PMS.	Electrical power to the PMS equipment will be disconnected and inspection will be performed for retrievability of the selected plant parameters in the MCR.	The selected plant parameters can be retrieved in the MCR.

The diverse automatic actuations are:

- Trip rods via the motor generator set, trip turbine, initiate the passive residual heat removal, actuate core makeup tanks, and trip the reactor coolant pumps on low wide-range steam generator water level
- Trip rods via the motor generator set, trip turbine, o~~O~~pen the passive heat removal discharge isolation valves and close the in-containment refueling water storage tank gutter isolation valves on high hot leg temperature
- Trip rods via the motor generator set, trip turbine, actuate the core makeup tanks, and trip the reactor coolant pumps on low pressurizer water level
- Isolate selected containment penetrations and start passive containment cooling water flow on high containment temperature

The selection of setpoints and time responses determine that the automatic functions do not actuate unless the protection and safety monitoring system has failed to actuate to control plant conditions. Capability is provided for testing and calibrating the channels of the diverse actuation system.

Manual Actuation Function

[*The manual actuation function of the diverse actuation system is implemented by hard-wiring the controls located in the main control room directly to the final loads in a way that completely bypasses the normal path through the protection and safety monitoring system cabinets, and the diverse actuation system automatic logic.*]*

The diverse manual functions are:

- Reactor and turbine trip
- Passive containment cooling actuation
- Core makeup tank actuation and reactor coolant pump trip
- Open stage 1 automatic depressurization system valves
- Open stage 2 automatic depressurization system valves
- Open stage 3 automatic depressurization system valves
- Open stage 4 automatic depressurization system valves
- Open the passive residual heat removal discharge isolation valves and close the in-containment refueling water storage tank gutter isolation valves

*NRC Staff approval is required prior to implementing a change in this information; see DCD Introduction Section 3.5.

- Selected containment penetration isolation
- Containment hydrogen igniter actuation
- Initiate in-containment refueling water storage tank injection
- Initiate containment recirculation
- Initiate in-containment refueling water storage tank drain to containment

In addition to the above functions, a redundant method of actuating the following components is provided at the DAS squib valve control cabinet:

- Open stage 4 automatic depressurization system valves
- Initiate in-containment refueling water storage tank injection
- Initiate containment recirculation
- Initiate in-containment refueling water storage tank drain to containment

Actuation Logic Function

There are two actuation logic modes, automatic and manual. The automatic actuation logic mode functions to logically combine the automatic signals from the two redundant automatic subsystems in a two-out-of-two basis. The combined signal operates a power switch with an output drive capability that is compatible, in voltage and current capacity, with the requirements of the final actuation devices. The two-out-of-two logic is implemented by connecting the outputs in series. The manual actuation mode operates in parallel to independently actuate the final devices.

Actuation signals are output to the loads in the form of normally de-energized, energize-to-actuate signals. The normally de-energized output state, along with the dual, two out of two redundancy reduces the probability of inadvertent actuation.

The diverse actuation system is designed so that, once actuated, each mitigation action goes to completion. Any subsequent return to operation requires deliberate operator action.

Indication

To support the diverse manual actuations, sensor outputs are displayed in the main control room in a manner that is diverse from the protection system display functions. The instrument sensor output displayed in the main control room is repeated at the DAS instrumentation cabinet. The indications that are provided from at least two sensors per function are:

- Steam generator water level – for reactor trip and passive residual heat removal actuations, and for overfill prevention by manual actuation of the automatic depressurization system valves
- Hot leg temperature – for passive residual heat removal actuation and reactor trip

- Core exit temperature – for automatic depressurization system actuation and subsequent initiation of in-containment refueling water storage tank injection and also containment hydrogen igniter actuation
- Pressurizer level – for core makeup tank actuation and reactor coolant pump trip
- Containment temperature – for containment isolation and passive containment cooling system actuation
- Rod control motor generator voltage – for confirmation of reactor ~~and turbine~~ trip

Isolation

The diverse actuation system uses sensors that are separate from those being used by the protection and safety monitoring system and the plant control system. This prohibits failures from propagating to the other plant systems through the use of shared sensors.

There is signal isolation between the two subsystems within the diverse actuation system, one for each input and output path. These isolators are characterized by a high common mode voltage withstand capability to provide the necessary isolation against faults. The configuration is set up such that the isolation devices are capable of protecting against fault propagation between the diverse actuation system subsystems.

Actuation interfaces are shared between the diverse actuation system and the protection and safety monitoring system. The diverse actuation system actuation devices are isolated from the protection and safety monitoring system actuation devices, so as to avoid adverse interactions between the two systems. The actuation devices of each system are capable of independent operation that is not affected by the operation of the other. The diverse actuation system is designed to actuate components only in a manner that initiates the safety function. This type of interface also prevents the failure of an actuation device in one system from propagating a failure into the other system.

The diverse actuation system and the protection and safety monitoring system use independent and separate uninterruptible power supplies.

Operability, Availability, and Testing

The diverse actuation system is designed to provide protection under all plant operating conditions in which the reactor vessel head is in place and non-Class 1E UPS power is available. The automatic actuation processors, in each of the two redundant automatic subsystems of the diverse actuation system, are provided with the capability for channel calibration and testing while the plant is operating. To prevent inadvertent DAS actuations during online calibration, testing activities or maintenance, the normal activation function is bypassed. Testing of the diverse actuation system is performed on a periodic basis.

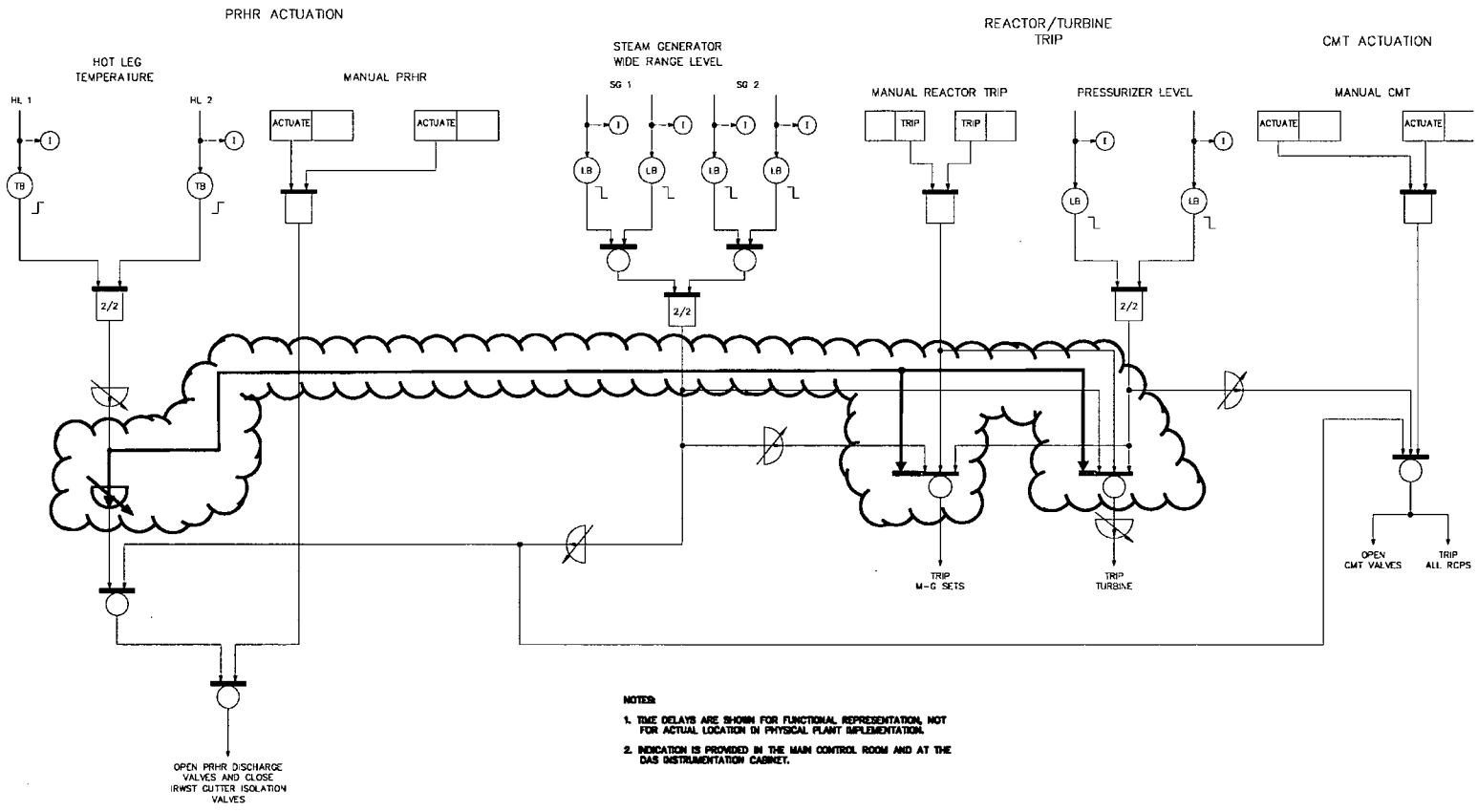

Figure 7.2-1 (Sheet 19 of 20)

Functional Diagram
Diverse Actuation System Logic Automatic Actuations

Table 14.3-3

ANTICIPATED TRANSIENT WITHOUT SCRAM

Reference	Design Feature	Value
Section 7.7.1.11	The diverse actuation system is a non-safety-related system that provides a diverse backup to the protection and safety monitoring system.	
Section 7.7.1.11	The diverse actuation system trips the reactor control rods and the turbine on low wide range steam generator water level, or ~~and~~ on low pressurizer water level, or on high hot leg temperature.	
Section 7.7.1.11	The diverse actuation system initiates passive residual heat removal on low wide range steam generator water level or high hot leg temperature; actuates core makeup tanks and trips the reactor coolant pumps on low pressurizer water level; and isolates selected containment penetrations and starts passive containment cooling on high containment temperature.	
Section 7.7.1.11	The manual actuation function of the diverse actuation system is implemented by wiring the controls located in the main control room directly to the final loads in a way that bypasses the normal path through the control room multiplexers, the protection and safety monitoring system cabinets, and the diverse actuation system logic.	
Section 7.7.1.11	The diverse actuation system uses microprocessor or special purpose logic processor boards different from those used in the protection and safety monitoring system.	
Section 7.7.1.11	The diverse actuation system hardware implementation is different from that of the protection and safety monitoring system.	
Section 7.7.1.11	The operating system and programming language of the diverse actuation system is different from that of the protection and safety monitoring system.	

Table 14.3-6 (Sheet 7 of 10)

PROBABILISTIC RISK ASSESSMENT

Reference		Design Feature	Value
Figure	7.2-1 (Sheets 16 and 20)	The squib valves and MOVs for reactor cavity flooding are manually actuated via PMS and DAS from the control room.	
Section	7.3.1.2.7 7.7.1.11	The PRHR air-operated valves are automatically actuated and manually actuated from the control room by either PMS or DAS.	
Section	7.3.1.2.20	The RNS containment isolation MOVs are actuated via PMS.	
Section	7.5.4	PMS has two divisions of safety-related post-accident parameter display.	
Section	7.6.1.1	An interlock is provided for the normally closed motor-operated normal residual heat removal system inner and outer suction isolation valves. Each valve is interlocked so that it cannot be opened unless the reactor coolant system pressure is below a preset pressure.	
Section	7.7.1.11	The diverse actuation system is a non-safety-related system that provides a diverse backup to the protection and safety monitoring system.	
Section	7.7.1.11	The diverse actuation system trips the reactor control rods and the turbine on low wide range steam generator water level, or ~~and~~ on low pressurizer water level, or on high hot leg temperature.	
Section	7.7.1.11	DAS manual initiation functions are implemented in a manner that bypasses the signal processing equipment of the DAS.	
Section	7.7.1.11	The DAS automatic actuation signals are generated in a functionally diverse manner from the PMS signals. Diversity between DAS and PMS is achieved by the use of different architectures, different hardware implementations, and different software, if any.	
Section	8.3.1.1.1	On loss of power to a 6900V diesel-backed bus, the associated diesel generator automatically starts and produces ac power. The source circuit breakers and bus load circuit breakers are opened, and the generator is connected to the bus. Each generator has an automatic load sequencer to enable controlled loading on the associated buses.	

Table 16.3-2 (Cont.)

INVESTMENT PROTECTION SHORT-TERM AVAILABILITY CONTROLS

SURVEILLANCE REQUIREMENTS

SURVEILLANCE			FREQUENCY
SR	1.1.1	Perform CHANNEL CHECK on each required channel.	30 hours
SR	1.1.2	Perform CHANNEL OPERATIONAL TEST on each required channel.	92 days
SR	1.1.3	Perform CHANNEL CALIBRATION on each required channel.	24 months
SR	1.1.4	Verify that the MG set field breakers open on demand.	24 months

Table 1.1-1, DAS ATWS Functions

DAS Function	Initiating Signal	Number Installed	Channels Required	Setpoint
Rod Drive MG Set Trip, Turbine Trip and PRHR HX Actuation	SG Wide Range Level - Low	2 per SG	1 per SG	> 27%
	HL Temperature - High	1 per HL	1 per HL	< 650°F

Table 16.3-2 (Cont.)

INVESTMENT PROTECTION SHORT-TERM AVAILABILITY CONTROLS

SURVEILLANCE REQUIREMENTS

SURVEILLANCE			FREQUENCY
SR	1.2.1	Perform CHANNEL CHECK on each required CHANNEL.	30 hours
SR	1.2.2	Perform CHANNEL OPERATIONAL TEST on each required CHANNEL.	92 days
SR	1.2.3	Perform CHANNEL CALIBRATION on each required CHANNEL.	24 months

Table 1.2-1, DAS ESFA Functions

DAS Function	Initiating Signal	Number Installed	Channels Required	Setpoint
PRHR HX Actuation	SG Wide Level - Low or	2 per SG	1 per SG	> 27%
	HL Temp - High	1 per HL	1 per HL	< 6~~36~~50°F
CMT Actuation and RCP trip	Pzr Level - Low or	2	2	> 7%
	SG Wide Level - Low	2 per SG	1 per SG	> 27%
Passive Cont. Cooling and Selected Cont. Isolation Actuation	Cont. Temp - High	2	2	< 200°F

Change Number 65

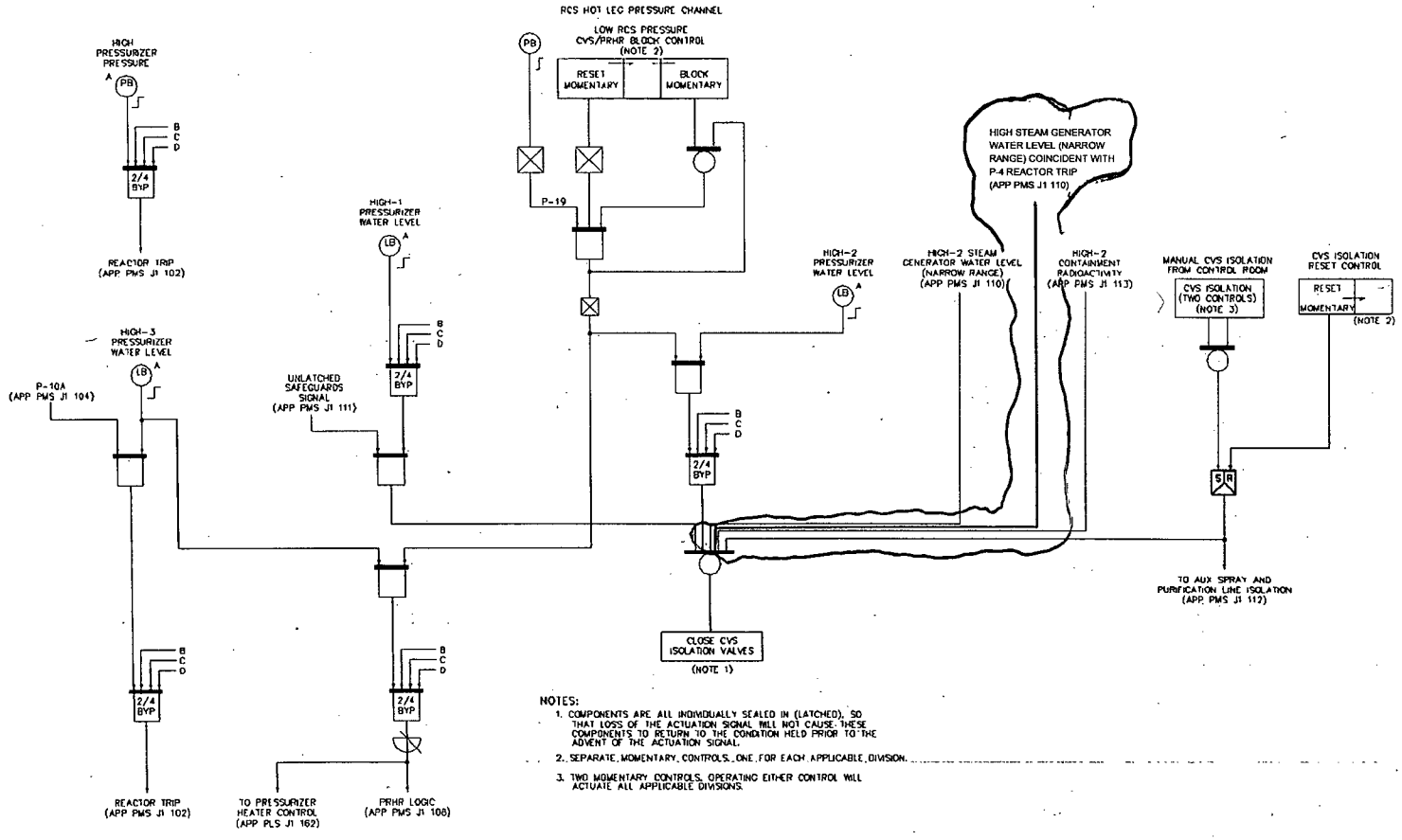

Figure 7.2-1 (Sheet 6 of 20)

Functional Diagram
Primary Overpressure & Loss of Heat Sink Protection

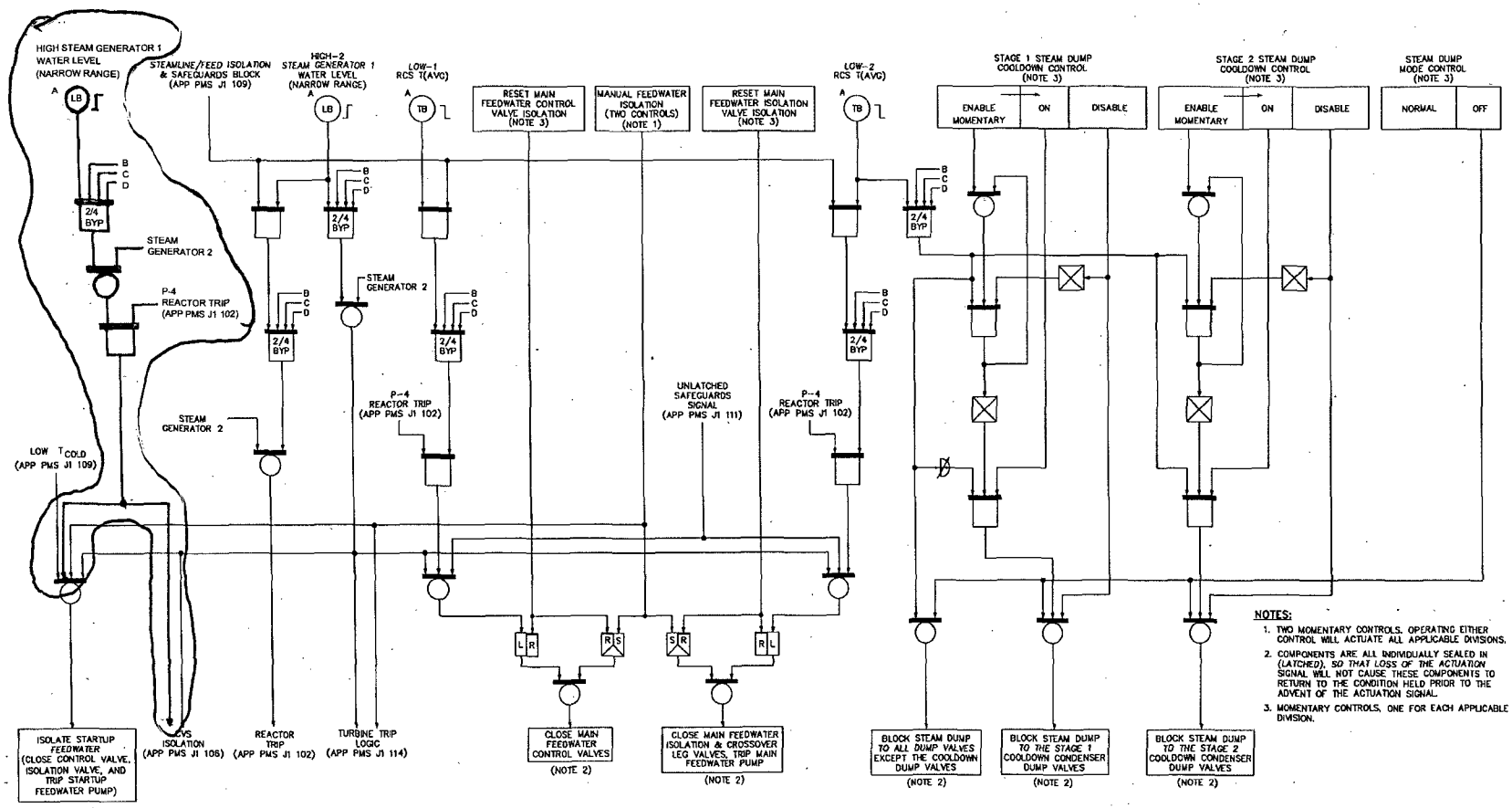

Figure 7.2-1 (Sheet 10 of 20)

Functional Diagram
Feedwater Isolation

7.3.1.2.12 Passive Containment Cooling Actuation

A signal to actuate the passive containment cooling system is generated from either of the following conditions:

1. Manual initiation
2. High-2 containment pressure

The passive containment cooling actuation signal opens valves that initiate gravity flow of cooling water from the passive containment cooling system water storage tank to the top of the containment shell. The evaporation of the water on the containment shell provides the passive cooling.

Condition 1 consists of two momentary controls. Manual actuation of either of the two controls results in manual actuation of the passive containment cooling system. This action also initiates containment isolation (subsection 7.3.1.2.1) and isolation of the containment air filtration system (subsection 7.3.1.2.19).

Condition 2 results from a coincidence of two of the four divisions of containment pressure above the High-2 setpoint. Manual reset is provided to block this actuation signal for passive containment cooling. Separate momentary controls are provided for resetting each division.

The functional logic relating to actuation of the passive containment cooling system is illustrated in Figure 7.2-1, sheet 13.

7.3.1.2.13 Startup Feedwater Isolation

Signals to isolate the startup feedwater supply to the steam generators are generated from either of the following conditions:

1. Low cold leg temperature
2. High-2 steam generator narrow range water level
3. Manual actuation of main feedwater isolation (subsection 7.3.1.2.6)
4. High steam generator narrow range water level (coincident with P-4 permissive)

Any of these conditions isolates the startup feedwater supply by tripping the startup feedwater pumps and closing the startup feedwater isolation and control valves.

Condition 1 results from the coincidence of reactor coolant system cold leg temperature below the Low T_{cold} setpoint in any loop. Startup feedwater isolation on this condition may be manually blocked when the pressurizer pressure is below the P-11 setpoint. This function is automatically unblocked when the pressurizer pressure is above the P-11 setpoint.

Condition 2 results from a coincidence of two of the four divisions of narrow range steam generator water level above the High-2 setpoint for either steam generator.

Condition 3 is discussed in other subsections as noted.

Condition 4 results from a coincidence of two of the four divisions of narrow range steam generator water level above the High setpoint for either steam generator coincident with the P-4 permissive (reactor trip).

The functional logic relating to the isolation of the startup feedwater is illustrated in Figure 7.2-1, sheets 9 and 10.

7.3.1.2.14 Boron Dilution Block

Signals to block boron dilution are generated from any of the following conditions:

1. Excessive increasing rate of source range flux doubling signal
2. Loss of ac power sources (low Class 1E battery charger input voltage)
3. Reactor trip (Table 7.3-2, interlock P-4)

In the event of an excessive increasing rate of source range flux doubling signal, the block of boron dilution is accomplished by closing the chemical and volume control system makeup isolation valves and closing the makeup pump suction valves to the demineralized water storage tanks. This signal also provides a non-safety trip of the makeup pumps. These actions terminate the supply of potentially unborated water to the reactor coolant system as quickly as possible.

In the event of a loss of ac power sources or a reactor trip (as indicated by P-4), the block of boron dilution is accomplished by closing the makeup pump suction valves to the demineralized water storage tanks and aligning the boric acid tank to the suction of the makeup pumps. This permits makeup as needed but ensures that it will be from a borated source that will not reduce the available shutdown margin in the reactor core.

Condition 1 is an average of the source range count rate, sampled at least N times over the most recent time period T_1, compared to a similar average taken at time period T_2 earlier. If the ratio of the current average count rate to the earlier average count rate is greater than a preset value, a partial trip is generated in the division. On a coincidence of excessively increasing source range neutron flux in two of the four divisions, boron dilution is blocked. The Flux Doubling function is also delayed from actuating each time the source range detector's high voltage power is energized to prevent a spurious dilution block due to the short term instability of the processed source range values. This source range flux doubling signal may be manually blocked to permit plant startup and normal power operation. It is automatically reinstated when reactor power is decreased below the P-6 power level during shutdown.

Condition 2 results from the loss of ac power. A short, preset time delay is provided to prevent actuation upon momentary power fluctuations; however, actuation occurs before ac power is restored by the onsite diesel generators. The loss of all ac power is detected by undervoltage sensors that are connected to the input of each of the four Class 1E battery chargers. Two sensors are connected to each of the four battery charger inputs. The loss of ac power signal is based on the detection of an undervoltage condition by each of the two sensors connected to two of the four battery chargers. The two-out-of-four logic is based on

an undervoltage to the battery chargers for divisions A or C coincident with an undervoltage to the battery chargers for divisions B or D.

Condition 3 results from a reactor trip as indicated by the P-4 interlock.

The functional logic relating to the boron dilution block is illustrated in Figure 7.2-1, sheets 3 and 15.

7.3.1.2.15 Chemical and Volume Control System Isolation

A signal to close the isolation valves of the chemical and volume control system is generated from any of the following conditions:

1. High-2 pressurizer level
2. High-2 steam generator narrow range water level
3. Automatic or manual safeguards actuation signal (subsection 7.3.1.1) coincident with High-1 pressurizer level
4. High-2 containment radioactivity
5. Manual initiation
6. High steam generator narrow range water level (coincident with P-4 permissive)

Condition 1 results from the coincidence of pressurizer level above the High-2 setpoint in any two of the four divisions. This function can be manually blocked when the reactor coolant system pressure is below the P-19 permissive setpoint to permit pressurizer water solid conditions with the plant cold and to permit pressurizer level makeup during plant cooldowns. This function is automatically unblocked when reactor coolant system pressure is above the P-19 setpoint.

Condition 2 results from a coincidence of two of the four divisions of narrow range steam generator water level above the High-2 setpoint for either steam generator.

Condition 3 results from the coincidence of two of the four divisions of pressurizer level above the High-1 setpoint, coincident with an automatic or manual safeguards actuation.

Condition 4 results from the coincidence of containment radioactivity above the High-2 setpoint in any two of the four divisions.

Condition 5 consists of two momentary controls. This action also initiates auxiliary spray and letdown purification line isolation (subsection 7.3.1.2.18).

Condition 6 results from a coincidence of two of the four divisions of narrow range steam generator water level above the High setpoint for either steam generator coincident with the P-4 permissive (reactor trip).

Table 7.3-1 (Sheet 5 of 9)

ENGINEERED SAFETY FEATURES ACTUATION SIGNALS

Actuation Signal	No. of Divisions/ Controls	Actuation Logic	Permissives and Interlocks
b. High-2 containment pressure	4	2/4-BYP[1]	None
c. Low lead-lag compensated steam line pressure[4]	4/steam line	2/4-BYP[1] in either steam line	Manual block permitted below P-11 Automatically unblocked above P-11
d. High steam line negative pressure rate	4/steam line	2/4-BYP[1] in either steam line[7]	Manual unblock permitted below P-11 Automatically blocked above P-11
e. Low cold leg temperature (Low T_{cold})	4/loop	2/4-BYP[1] either loop[6]	Manual block permitted below P-11 Automatically unblocked above P-11
9. Steam Generator Blowdown System Isolation (Figure 7.2-1 Sheets 7 and 8)			
a. Passive residual heat removal heat exchanger actuation	(See items 12a through 12f)		
b. Low narrow range steam generator water level	4/steam generator	2/4 BYP[1] in either steam generator	None
10. Passive Containment Cooling Actuation (Figure 7.2-1, Sheet 13)			
a. Manual initiation	2 controls	1/2 controls	None
b. High-2 containment pressure	4	2/4-BYP[1]	None
11. Startup Feedwater Isolation (Figure 7.2-1, Sheets 9 and 10)			
a. Low cold leg temperature (Low T_{cold})	4/loop	2/4-BYP[1] either loop[6]	Manual block permitted below P-11 Automatically unblocked above P-11
b. High-2 steam generator narrow range water level	4/steam generator	2/4-BYP[1] in either steam generator	None
c. Manual initiation of main feedwater isolation		(See item 4b)	
d. High steam generator narrow range level coincident with	4/steam generator	2/4-BYP[1] in either steam generator	None
Reactor trip (P-4)	1/division	2/4	None

Table 7.3-1 (Sheet 7 of 9)

ENGINEERED SAFETY FEATURES ACTUATION SIGNALS

Actuation Signal	No. of Divisions/ Controls	Actuation Logic	Permissives and Interlocks
c. Automatic or manual safeguards actuation signal coincident with	(See items 1a through 1e)		
High-1 pressurizer water level	4	2/4-BYP[1]	None
d. High-2 containment radioactivity	4	2/4-BYP[1]	None
e. Manual initiation	2 controls	1/2 controls	None
f. Flux doubling calculation	4	2/4-BYP[1]	Manual block permitted when critical or intentionally approaching criticality Automatically unblocked below P-6
g. High steam generator narrow range level coincident with	4/steam generator	2/4-BYP[1] in either steam generator	None
Reactor trip (P-4)	1/division	2/4	None
15. Steam Dump Block (Figure 7.2-1, Sheet 10)[8]			
a. Low reactor coolant temperature (Low-2 T_{avg})	2/loop	2/4-BYP[1]	None
b. Mode control	2 controls	1/division	None
c. Manual stage 1 cooldown control	2 controls	1/division	None
d. Manual stage 2 cooldown control	2 controls	1/division	None
16. Main Control Room Isolation and Air Supply Initiation (Figure 7.2-1, Sheet 13)			
a. High-2 control room supply air radiation	2	1/2	None
~~b. Low pressurizer pressure~~	~~4~~	~~2/4 BYP[1]~~	~~Manual block permitted below P-11 Automatically unblocked above P-11~~
be. Undervoltage to Class 1E battery chargers[8]	2/charger	2/2 per charger and 2/4 chargers[5]	None
cd. Manual initiation[8]	2 controls	1/2 controls	None
17. Auxiliary Spray and Purification Line Isolation (Figure 7.2-1, Sheet 12)			

Table 15.0-4a (Sheet 1 of 2)

PROTECTION AND SAFETY MONITORING SYSTEM SETPOINTS AND TIME DELAY ASSUMED IN ACCIDENT ANALYSES

Function	Limiting Setpoint Assumed in Analyses	Time Delays (seconds)
Reactor trip on power range high neutron flux, high setting	118%	0.9
Reactor trip on power range high neutron flux, low setting	35%	0.9
Reactor trip on source range neutron flux reactor trip	Not applicable	0.9
Overtemperature ΔT	Variable (see Figure 15.0.3-1)	2.0
Overpower ΔT	Variable (see Figure 15.0.3-1)	2.0
Reactor trip on high pressurizer pressure	2460 psia	2.0
Reactor trip on low pressurizer pressure	1800 psia	2.0
Reactor trip on low reactor coolant flow in either hot leg	87% loop flow	1.45
Reactor trip on reactor coolant pump under speed	90%	0.767
Reactor trip on low steam generator narrow range level	95,000 lbm	2.0
High steam generator narrow range level coincident with reactor trip (P-4)	85% of narrow range level span	2.0 (startup feedwater isolation) 2.0 (chemical and volume control system makeup isolation)
High-2 steam generator level	95% of narrow range level span	2.0 (reactor trip) 0.0 (turbine trip) 2.0 (feedwater isolation)
Reactor trip on high-3 pressurizer water level	76% of span	2.0
PRHR actuation on low steam generator wide range level	55,000 lbm	2.0
"S" signal and steam line isolation on low T_{cold}	500°F	2.0

Table 15.0-6 (Sheet 5 of 5)

PLANT SYSTEMS AND EQUIPMENT AVAILABLE FOR TRANSIENT AND ACCIDENT CONDITIONS

Incident	Reactor Trip Functions	ESF Actuation Functions	ESF and Other Equipment
Section 15.6 (Cont.)			
Steam generator tube rupture	Low pressurizer pressure, overtemperature ΔT, safeguards ("S"), manual	Low pressurizer pressure, high-2 steam generator water level, high steam generator level coincident with Reactor Trip (P-4), low steam line pressure, low pressurizer level	Core makeup tank, PRHR, steam generator safety and/or relief valves, MSIVs, radiation monitors (air removal, steam line, and steam generator blowdown), startup feedwater isolation, chemical and volume control system pump isolation, pressurizer heater isolation, steam generator power-operated relief valve isolation
LOCAs resulting from the spectrum of postulated piping breaks within the reactor coolant pressure boundary	Low pressurizer pressure, safeguards ("S"), manual	High-2 containment pressure, low pressurizer pressure	Core makeup tank, accumulator, ADS, steam generator safety and/or relief valves, PRHR, in-containment water storage tank (IRWST)

At the time the accident occurs, there is the potential for a coincident loss of spent fuel pool cooling with the result that the pool could reach boiling and a portion of the radioactive iodine in the spent fuel pool could be released to the environment. The loss of spent fuel pool cooling has been evaluated for a duration of 30 days. There is no contribution to the 2-hour site boundary dose because pool boiling would not occur until after 2 hours. The 30-day contribution to the dose at the low population zone boundary is less than 0.01 rem TEDE and, when this is added to the dose calculated for the small line break outside containment, the resulting total dose remains less than the value reported above.

15.6.3 Steam Generator Tube Rupture

15.6.3.1 Identification of Cause and Accident Description

15.6.3.1.1 Introduction

The accident examined is the complete severance of a single steam generator tube. The accident is assumed to take place at power with the reactor coolant contaminated with fission products corresponding to continuous operation with a limited number of defective fuel rods within the allowance of the Technical Specifications. The accident leads to an increase in contamination of the secondary system due to leakage of radioactive coolant from the reactor coolant system. In the event of a coincident loss of offsite power, or a failure of the condenser steam dump, discharge of radioactivity to the atmosphere takes place via the steam generator power-operated relief valves or the safety valves.

The assumption of a complete tube severance is conservative because the steam generator tube material (Alloy 690) is a corrosion-resistant and ductile material. The more probable mode of tube failure is one or more smaller leaks of undetermined origin. Activity in the secondary side is subject to continual surveillance, and an accumulation of such leaks, which exceeds the limits established in the Technical Specifications, is not permitted during operation.

The AP1000 design provides automatic protective actions to mitigate the consequences of an SGTR. The automatic actions include reactor trip, actuation of the passive residual heat removal (PRHR) heat exchanger, initiation of core makeup tank flow, termination of pressurizer heater operation, and isolation of chemical and volume control system flow and startup feedwater flow on high-2 steam generator level or high steam generator level coincident with reactor trip (P-4). These protective actions result in automatic cooldown and depressurization of the reactor coolant system, termination of the break flow and release of steam to the atmosphere, and long-term maintenance of stable conditions in the reactor coolant system. These protection systems serve to prevent steam generator overfill (see discussion in subsections 15.6.3.1.2 and 15.6.3.1.3) and to maintain offsite radiation doses within the allowable guideline values for a design basis SGTR. The operator may take actions that would provide a more rapid mitigation of the consequences of an SGTR.

Because of the series of alarms described next, the operator can readily determine when an SGTR occurs, identify and isolate the ruptured steam generator, and complete the required recovery actions to stabilize the plant and terminate the primary-to-secondary break flow. The recovery procedures are completed on a time scale that terminates break flow to the secondary system

15.6.3.1.3 Steam Generator Tube Rupture Automatic Recovery Actions

The AP1000 incorporates several protection system and passive design features that automatically terminate a steam generator tube leak and stabilize the reactor coolant system, in the highly unlikely event that the operators do not perform recovery actions. Following an SGTR, the injecting chemical and volume control system flow (and pressurizer heater heat addition if the pressure control system is operating) maintains the primary-to-secondary break flow and the ruptured steam generator secondary level increases as break flow accumulates in the steam generator. Eventually, the ruptured steam generator secondary level reaches the high and high-2 steam generator narrow range level setpoint, which is near the top of the narrow range level span.

The AP1000 protection system automatically provides several safety-related actions to cool down and depressurize the reactor coolant system, terminate the break flow and steam release to the atmosphere, and stabilize the reactor coolant system in a safe condition. The safety-related actions include initiation of the PRHR system heat exchanger, isolation of the chemical and volume control system pumps and pressurizer heaters, and isolation of the startup feedwater pumps. In addition, the protection and safety monitoring system provides a safety-related signal to trip the redundant, non-safety related pressurizer heater breakers.

Actuating the PRHR heat exchanger transfers core decay heat to the in-containment reactor water storage tank (IRWST) and initiates a cooldown (and a consequential depressurization) of the reactor coolant system.

Isolation of the chemical and volume control system pumps and pressurizer heaters minimizes the repressurization of the primary system. This allows primary pressure to equilibrate with the secondary pressure, which effectively terminates the primary-to-secondary break flow. Because the core makeup tank continues to inject when needed to provide boration following isolation of the chemical and volume control system pumps, isolating the chemical and volume control system pumps does not present a safety concern.

Isolation of the startup feedwater provides protection against a failure of the startup feedwater control system, which could potentially result in the ruptured steam generator being overfilled.

With decay heat removal by the PRHR heat exchanger, steam generator steaming through the power-operated relief valves ceases and steam generator secondary level is maintained.

15.6.3.1.4 Steam Generator Tube Rupture Assuming Operator Recovery Actions

In the event of an SGTR, the operators can diagnose the accident and perform recovery actions to stabilize the plant, terminate the primary-to-secondary leakage, and proceed with orderly shutdown of the reactor before actuation of the automatic protection systems. The operator actions for SGTR recovery are provided in the plant emergency operating procedures. The major operator actions include the following:

- Identify the ruptured steam generator – The ruptured steam generator can be identified by an unexpected increase in steam generator narrow range level or a high radiation indication from any main steam line monitor, steam generator blowdown line monitor, or steam generator sample.

The reactor is assumed to be operating at full power at the time of the accident, and the initial secondary mass is assumed to correspond to operation at nominal steam generator mass minus an allowance for uncertainties. Offsite power is assumed to be lost and the rods are assumed to be inserted at the start of the event because continued operation of the reactor coolant pumps has been determined to reduce flashing of primary-to-secondary break flow and, consequently, lower offsite radiological doses. Maximum chemical and volume control system flows and pressurizer heater heat addition are assumed immediately (even though offsite power is not available) to conservatively maximize primary-to-secondary leakage. The steam dump system is assumed to be inoperable, consistent with the loss of offsite power assumption, because this results in steam release from the steam generator power-operated relief valves to the atmosphere following reactor trip. The chemical and volume control system and pressurizer heater modeling is conservatively chosen to delay the low pressurizer pressure "S" and the low-2 pressurizer level signal and associated protection system actions.

The limiting single failure is assumed to be the failure of the ruptured steam generator power-operated relief valve. Failure of this valve in the open position causes an uncontrolled depressurization of the ruptured steam generator, which increases primary-to-secondary leakage and the mass release to the atmosphere.

It is assumed that the ruptured steam generator power-operated relief valve fails open when the low-2 pressurizer level signal is generated. This results in the maximum integrated flashed primary-to-secondary break flow.

The valve is subsequently isolated when the associated block valve is automatically closed on a low steam line pressure protection system signal.

No operator actions are modeled in this limiting analysis, and the plant protection system provides the protection for the plant. Not modeling operator actions is conservative because the operators are expected to have sufficient time to recover from the accident and supplement the automatic protection system. In particular, the operator would take action to reduce the primary pressure before the high~~-2~~ steam generator level coincident with reactor trip (P-4) chemical and volume control and startup feedwater system shutoff signals ~~is~~ are generated. It is also expected that the operator can close the block valve to the ruptured steam generator power-operated relief valve in much shorter time than the automatic protection signal. The operators can quickly diagnose a power-operated relief valve failure based on the rapid depressurization of the steam generator and increase in steam flow. They can then close the block valve from the control panel.

Consistent with the assumed loss of offsite power, the main feedwater pumps coast down and no startup feedwater is assumed to conservatively minimize steam generator secondary inventory and thus maximize secondary activity concentration and steam release.

15.6.3.2.1.3 Results

The sequence of events for this transient is presented in Table 15.6.3-1. The system responses to the SGTR accident are shown in Figures 15.6.3-1 to 15.6.3-10.

Offsite power is lost concurrent with the rupture of the tube. The reactor trips due to the loss of offsite power. The main feedwater pumps are assumed to coast down following reactor trip. The

startup feedwater pumps are conservatively assumed not to start. Following the tube rupture, reactor coolant flows from the primary into the secondary side of the ruptured steam generator. In response to this loss of reactor coolant, pressurizer level and reactor coolant system pressure decreases as shown in Figures 15.6.3-1 and 15.6.3-2. As a result of the decreasing pressurizer level and pressure, two chemical and volume control system pumps are automatically initiated to provide makeup flow and the pressurizer heaters turn on.

After reactor trip, core power rapidly decreases to decay heat levels and the core inlet to outlet temperature differential decreases. The turbine stop valves close, and steam flow to the turbine is terminated. The steam dump system is conservatively assumed to be inoperable. The secondary side pressure increases rapidly after reactor trip until the steam generator power-operated relief valves (and safety valves, if their setpoints are reached) lift to dissipate the energy, as shown in Figure 15.6.3-3.

Maximum heat addition to the pressurizer from the pressurizer heaters increases the primary pressure.

As the leak flow continues to deplete primary inventory, low pressurizer level "S" and core makeup tank and PRHR actuation signals are reached. Power to the pressurizer heaters is shut off so that they will not provide additional heat to the primary should the pressurizer level return. The ruptured steam generator power-operated relief valve is assumed to fail open at this time.

The failure causes the intact and ruptured steam generators to rapidly depressurize (Figure 15.6.3-3). This results in an initial increase in primary-to-secondary leakage and a decrease in the reactor coolant system temperatures. Both the intact and ruptured steam generators depressurize because the steam generators communicate through the open steam line isolation valves.

The decrease in the reactor coolant system temperature results in a decrease in the pressurizer level and reactor coolant system pressure (Figures 15.6.3-1 and 15.6.3-2). Depressurization of the primary and secondary systems continues until the low steam line pressure setpoint is reached. As a result, the steam line isolation valves and intact and ruptured steam generator power-operated relief block valves are closed.

Following closure of the block valves, the primary and secondary pressures and the ruptured steam generator secondary water volume and mass increase as break flow accumulates. This increase continues until the steam generator secondary level reaches the high~~-2~~ narrow range level when the chemical and volume control and startup feedwater systems ~~pumps~~ are isolated.

With continued reactor coolant system cooldown, depressurization provided by the PRHR heat exchanger, and with the chemical and volume control system isolated, primary system pressure eventually falls to match the secondary pressure. The break flow terminates as shown in Figure 15.6.3-5, and the system is stabilized in a safe condition. As shown in Figure 15.6.3-8, steam release through the intact loop, unfaulted power-operated relief valve does not occur following PRHR initiation because the PRHR is capable of removing the core decay heat.

As shown in Figure 15.6.3-9, the core makeup tank flow trends toward zero because the gravity head diminishes as the core makeup tank temperature approaches the reactor coolant system

Table 3.3.2-1 (page 5 of 13)
Engineered Safeguards Actuation System Instrumentation

FUNCTION	APPLICABLE MODES OR OTHER SPECIFIED CONDITIONS	REQUIRED CHANNELS	CONDITIONS	SURVEILLANCE REQUIREMENTS	ALLOWABLE VALUE	TRIP SETPOINT
8. Startup Feedwater Isolation						
a. SG Narrow Range Water Level – High 2	1,2,3,4[o]	4 per SG	B,S	SR 3.3.2.1 SR 3.3.2.4 SR 3.3.2.5 SR 3.3.2.6	≤ 82.05% span	82% span
b. T_{cold} – Low	1,2,3[a]	4 per loop	B,M	SR 3.3.2.1 SR 3.3.2.4 SR 3.3.2.5 SR 3.3.2.6	≥ 504.9°F ≤ 505.1°F	50~~5°F~~
c. Manual Initiation	Refer to Function 6.a (Manual Main Feedwater Control Valve Isolation) for requirements.					
d. SG Narrow Range Water Level High	1,2,3,4[o]	4 per SG	B,S	SR 3.3.2.1 SR 3.3.2.4 SR 3.3.2.5 SR 3.3.2.6	≤ 72.85% span	72.8%
Coincident with Reactor Trip (P-4)	Refer to Function 18.a (ESFAS Interlocks, Reactor Trip, P-4) for all requirements.					
9. ADS Stages 1, 2 & 3 Actuation						
a. Manual Initiation	1,2,3,4	2 switch sets	E,O	SR 3.3.2.3	NA	NA
	5[k],6[g,k]	2 switch sets	G,X	SR 3.3.2.3	NA	NA
b. Core Makeup Tank (CMT) Level – Low 1	1,2,3,4	4 per tank	B,O	SR 3.3.2.1 SR 3.3.2.4 SR 3.3.2.5 SR 3.3.2.6	≥ 56.9% span	61.9~~% span~~
	5[c,k]	4 per OPERABLE tank	B,V	SR 3.3.2.1 SR 3.3.2.4 SR 3.3.2.5 SR 3.3.2.6	≥ 56.9% span	61.9% span
Coincident with CMT Actuation	Refer to Function 2 (CMT Actuation) for all initiating functions and requirements.					

(a) Above the P-11 (Pressurizer Pressure) interlock, when the RCS boron concentration is below that necessary to meet the SDM requirements at an RCS temperature of 200°F.

(c) With pressurizer level ≥ 20%.

(g) With upper internals in place.

(o) Not applicable when the startup feedwater flow paths are isolated.

(k) Not applicable when the required ADS valves are open. See LCO 3.4.12 and LCO 3.4.13 for ADS valve and equivalent relief area requirements.

Table 3.3.2-1 (page 9 of 13)
Engineered Safeguards Actuation System Instrumentation

	FUNCTION	APPLICABLE MODES OR OTHER SPECIFIED CONDITIONS	REQUIRED CHANNELS	CONDITIONS	SURVEILLANCE REQUIREMENTS	ALLOWABLE VALUE	TRIP SETPOINT
15.	Boron Dilution Block						
	a. Source Range Neutron Flux Doubling	2[f],3[f],4[m]	4	B,T	SR 3.3.2.1 SR 3.3.2.4 SR 3.3.2.5 SR 3.3.2.6	≤ ~~Source Range Flux X 2.201 in 50 minutes~~	Source Range Flux X ~~2.2 in 50 minutes~~
		5[m]	4	B,P	SR 3.3.2.1 SR 3.3.2.4 SR 3.3.2.5 SR 3.3.2.6	≤ ~~Source Range Flux X 2.201 in 50 minutes~~	Source Range Flux X ~~2.2 in 50 minutes~~
	b. Reactor Trip	Refer to Function 18.b~~a~~ (ESFAS Interlocks, Reactor Trip, P-4) for all requirements.					
16.	Chemical Volume and Control System Makeup Isolation						
	a. SG Narrow Range Water Level – High 2	1,2,3[m],4[j,m]	4 per SG	B,R	SR 3.3.2.1 SR 3.3.2.4 SR 3.3.2.5 SR 3.3.2.6	≤ ~~82.05% span~~	82~~% span~~
	b. Pressurizer Water Level – High 1	1,2,3[m]	4	B,Q	SR 3.3.2.1 SR 3.3.2.4 SR 3.3.2.5 SR 3.3.2.6	≤ ~~23.05% span~~	23% span
	Coincident with Safeguards Actuation	1,2,3[m]	Refer to Function 1 (Safeguards Actuation) for initiating functions and requirements.				
	c. Pressurizer Water Level – High 2	1,2,3,4[j,m,p]	4	B,T	SR 3.3.2.1 SR 3.3.2.4 SR 3.3.2.5 SR 3.3.2.6	≤ ~~59.05% span~~	59% span
	d. Containment Radioactivity – High 2	1,2,3[m]	4	B,Q	SR 3.3.2.1 SR 3.3.2.4 SR 3.3.2.5 SR 3.3.2.6	≤ ~~150 R/hr~~	100 R/hr
	e. Manual Initiation	1,2,3[m],4[j,m]	2 switches	E,R	SR 3.3.2.3	NA	NA
	f. Source Range Neutron Flux Doubling	Refer to Function 15.a (Boron Dilution Block, Source Range Neutron Flux Doubling) for all requirements.					
	g. SG Narrow Range Water Level High	1,2,3[m],4[j,m]	4 per SG	B,R	SR 3.3.2.1 SR 3.3.2.4 SR 3.3.2.5 SR 3.3.2.6	≤ 72.85% span	72.8% span
	Coincident with Reactor Trip (P-4)	Refer to Function 18.a (ESFAS Interlocks, Reactor Trip, P-4) for all requirements.					

(f) ~~Not applicable when critical or during intentional approach to criticality.~~

(j) With the RCS not being cooled by the Normal Residual Heat Removal System (RNS).

(m) Not applicable for valve isolation Functions whose associated flow path is isolated.

(p) Above the P-19 (RCS Pressure) interlock.

BASES

APPLICABLE SAFETY ANALYSES, LCOs, and APPLICABILITY (continued)

8.c. Manual Main Feedwater Control Valve Isolation (Function 6.a)

The Startup Feedwater Isolation is also initiated by the Manual Main Feedwater Control Valve Isolation Function. The requirements for this Function are the same as the requirements for the Manual Main Feedwater Control Valve Isolation (Function 6.a). Therefore, the requirements are not repeated in Table 3.3.2-1, and Function 6.a is referenced for all requirements.

8.d. Steam Generator Narrow Range Level – High Coincident with Reactor Trip (P-4)

If steam generator narrow range level reaches the High setpoint in either steam generator coincident with a Reactor Trip (P-4), then all startup feedwater control and isolation valves are closed and the startup feedwater pumps are tripped. Four channels are provided in each steam generator to permit one channel to be in trip or bypass indefinitely and still ensure no single random failure will disable this function.

9. ADS Stages 1, 2, & 3 Actuation

The Automatic Depressurization System (ADS) provides a sequenced depressurization of the reactor coolant system to allow passive injection from the CMTs, accumulators, and the in-containment refueling water storage tank (IRWST) to mitigate the effects of a LOCA. The depressurization is accomplished in four stages, with the first three stages discharging into the IRWST and the last stage discharging into containment. Each of the first three stages consists of two parallel paths with each path containing an isolation valve and a depressurization valve.

The first stage isolation valves open on any ADS Stages 1, 2, and 3 actuation. The first stage depressurization valves are opened following a preset time delay after the actuation of the isolation valves. The second stage isolation valves are opened following a preset time delay after actuation of the first stage depressurization valves open. The second stage depressurization valves are opened following a preset time delay after the second stage isolation valves are actuated, similar to stage one. Similar to the second stage, the third stage isolation valves are opened following a preset time delay after the actuation of the second stage depressurization valves. The third stage depressurization valves are opened following a preset time delay after the third stage isolation valves are actuated.

BASES

APPLICABLE SAFETY ANALYSES, LCOs, and APPLICABILITY (continued)

Function is not required to be OPERABLE in MODE 3 if the associated flow path is isolated. This signal results from the coincidence of containment radioactivity above the High 2 Setpoint in any two of the four divisions. These Functions are not required to be OPERABLE in MODES 4, 5, and 6 because there is no credible release of radioactivity into the containment in these MODES that would result in a High 2 actuation.

16.e Manual Initiation

Manual Chemical Volume Control System Makeup Isolation is actuated by either of two switches in the main control room. Either switch closes Chemical Volume Control System Makeup valves. The LCO requires two switches to be OPERABLE.

16.f. Source Range Neutron Flux Doubling (Function 15.a)

Chemical Volume Control System Makeup Isolation is actuated by the Source Range Neutron Flux Doubling Function. The Source Range Neutron Flux Doubling Function requirements are the same as the requirements for Boron Dilution Block Function 15.a, Source Range Neutron Flux Doubling. Therefore, the requirements are not repeated in Table 3.3.2-1, and Function 15.a is referenced for all requirements.

16.g. Steam Generator Narrow Range Water Level – High Coincident with Reactor Trip (P-4)

Four channels of steam generator level are provided for each steam generator. Two-out-of-four channels on either steam generator indicating level greater than the setpoint will close the isolation valves for the CVS. This Function prevents adding makeup water to the RCS during an SGTR. This Function is required to be OPERABLE in MODES 1, 2, 3, and 4 with the RCS not being cooled by the RNS. This Function is not applicable in MODES 3 and 4 if the CVS makeup flow path is isolated. This Function is not required to be OPERABLE in MODES 5 and 6 because the RCS pressure and temperature are reduced and a steam generator tube rupture event is not credible.

BASES

APPLICABILITY (continued)

because a pressurizer overfill event or steam generator tube rupture accident is considered possible in these MODES, and the automatic closure of these valves is assumed in the safety analysis.

In the applicable MODES, the need to isolate the CVS makeup to the RCS is detected by the pressurizer level instruments (high 1 setpoint coincident with safeguards actuation or high 2 setpoint) or the steam generator narrow range level instruments (high setpoint coincident with reactor trip (P-4) or high 2 setpoint).

This isolation function is not required in MODE 4 with the RNS suction open to the RCS or in lower MODES. In such MODES, pressurizer or steam generator overfill is prevented by the RNS suction relief valve.

ACTIONS

A.1

If only one CVS makeup isolation valve is OPERABLE, the second valve must be restored to OPERABLE status in 72 hours. The allowed Completion Time assures expeditious action will be taken, and is acceptable because the safety function of automatically isolating RCS makeup can be accomplished by the redundant isolation valve.

B.1

If the Required Actions and associated Completion Time of Condition A are not met, or if both CVS makeup isolation valves are not OPERABLE (i.e., not able to be closed automatically), then the makeup flow path to the RCS must be isolated. Isolation can be accomplished by manually closing the CVS makeup isolation MOVs or alternatively, manual valve(s) in the makeup line between the makeup pumps and the RCS.

The Action is modified by a Note allowing the flow path to be unisolated intermittently under administrative controls. These administrative controls consist of stationing a dedicated operator at the valve controls, who is in continuous communication with the main control room. In this way, the flow path can be rapidly isolated when a need for isolation is indicated.

SURVEILLANCE REQUIREMENTS

SR 3.4.17.1

Verification that the RCS makeup isolation valves are OPERABLE, by stroking each valve closed, demonstrates that the valves can perform their safety related function. The Frequency is in accordance with the Inservice Testing Program.

ENCLOSURE 7

DCD Pages for CN59

(Public Redacted Version)

Change Number 59

Security-Related Information Withheld Under 10 CFR 2.390d

SRI

Figure 1.2-18

Annex Building General Arrangement Plan at Elevation 100′-0″ & 107′-2″

Table 3.2-3 (Sheet 4 of ~~65~~68)

AP1000 CLASSIFICATION OF MECHANICAL AND FLUID SYSTEMS, COMPONENTS, AND EQUIPMENT

Tag Number	Description	AP1000 Class	Seismic Category	Principal Construction Code	Comments
Chemical and Volume Control System (Continued)					
CVS-PL-V091	Makeup Line Containment Isolation	B	I	ASME III-2	
CVS-PL-V092	Hydrogen Add Containment Isolation	B	I	ASME III-2	
CVS-PL-V094	Hydrogen Add IRC Isolation	B	I	ASME III-2	
CVS-PL-V096	Hydrogen Add Containment Isolation Test Connection	B	I	ASME III-2	
CVS-PL-V100	Makeup Line Containment Isolation Relief	B	I	ASME III-2	
CVS-PL-V136A	Demineralized Water System Isolation	C	I	ASME III-3	
CVS-PL-V136B	Demineralized Water System Isolation	C	I	ASME III-3	
CVS-PY-C01	Demineralizer Resin Flush Line Containment Penetration	B	I	ASME III, MC	
CVS-PY-C02	Letdown Line Containment Penetration	B	I	ASME III, 2	
CVS-PY-C03	Makeup Line Containment Penetration	B	I	ASME III, MC	
CVS-PY-C04	Hydrogen Add Line Containment Penetration	B	I	ASME III, 2	
Balance of system components are Class D or E					
Circulating Water System (CWS)		Location: Turbine Building and pump intake structure			
System components are Class E					
Standby Diesel Fuel Oil System (DOS)		Location: Diesel Generator Building and yard			
n/a	Fuel Oil Transfer Package	D	NS	Manufacturer Std.	
n/a	Fuel Oil Storage Tanks	D	NS	API 650	
n/a	Fuel Oil Day Tanks	D	NS	ASME VIII	
n/a	Valves Providing DOS AP1000 Equipment Class D Function	D	NS	ANSI 16.34	
n/a	Ancillary Diesel Generator Fuel Tank	D	II	ASME VIII~~UL 142~~	Located in Annex Building
Balance of system components are Class E					

Security-Related Information Withheld Under 10 CFR 2.390d

SRI

Figure 3.7.2-19 (Sheet 1 of 10)

Annex Building Key Structural Dimensions Plan at Elevation 100'-0"

Both the diesel engine and the associated generator are rated based on 104°F ambient temperature at 1000 ft elevation as standard site conditions. The selected unit rating has a design margin to accommodate possible derating resulting from other site conditions.

The diesel generator unit is able to reach the rated speed and voltage and be ready to accept electrical loads within 120 seconds after a start signal.

Each generator has an automatic load sequencer to enable controlled loading on the generator. The automatic load sequencer connects selected loads at predetermined intervals. This feature allows recuperation of generator voltage and frequency to rated values prior to the connection of the next load.

For sequential and manual loading of the onsite standby diesel generator, see Tables 8.3.1-1 and 8.3.1-2.

To enable periodic testing, each generator has synchronizing equipment at a local panel as well as in the main control room.

The logic diagram for diesel generator initiating circuit is shown in Figure 8.3.1-2.

8.3.1.1.3 Ancillary ac Diesel Generators

Power for Class 1E post-accident monitoring, MCR lighting, MCR and divisions B and C I&C room ventilation and for refilling the PCS water storage tank and the spent fuel pool when no other sources of power are available is provided by two ancillary ac diesel generators located in the annex building. The ancillary generators are not needed for refilling the PCS water storage tank, spent fuel pool makeup, post-accident monitoring or lighting for the first 72 hours following a loss of all other ac sources.

The generators are classified as AP1000 Class D. The generators are commercial, skid-mounted, packaged units and can be easily replaced in the event of a failure. Generator control is manual from a control integral with the diesel skid package. These generators are located in the portion of the Annex Building that is a seismic Category II structure.

For these systems and components, the design of equipment anchorages is consistent with the SSE design of equipment anchorages of seismic Category I items and there should be no spatial interaction with any other non-seismic SSC that could adversely interact to prevent the functioning of the post-72 hour SSCs following an SSE; no dynamic qualification of the active equipment is necessary. Features of this structure which protect the function of the ancillary generators are analyzed ~~and designed for Category 5 hurricanes, including the effects of~~ sustained winds, maximum gusts, and associated wind-borne missiles.

The fuel for the ancillary generators is stored in a tank located in the same room as the generators. The fuel tank, piping, and valves are analyzed to show that they withstand an SSE. The tank includes provisions for venting to the outside atmosphere and for refilling from a truck or other mobile source of fuel. The tank is seismic Category II and holds sufficient fuel for 4 days of operation.

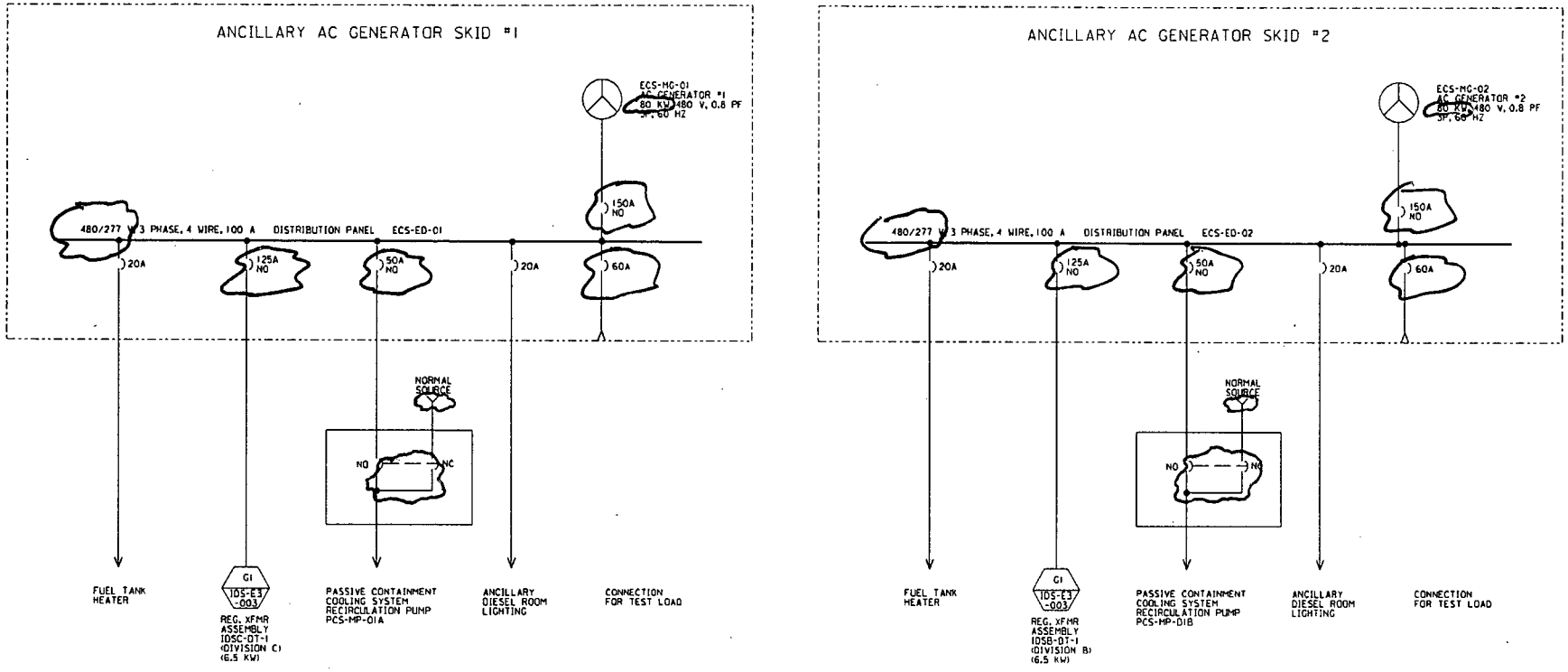

Figure 8.3.1-3

Post-72-Hour Temporary Electric Power One Line Diagram

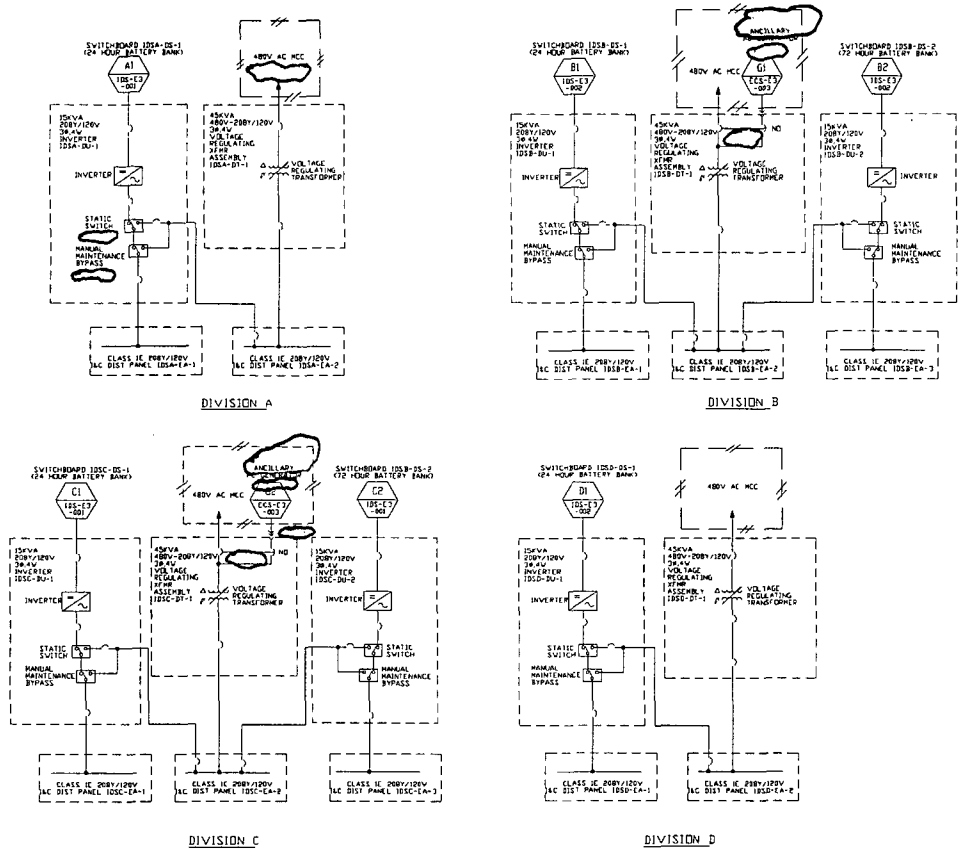

Figure 8.3.2-2

Class 1E 208y/120V UPS One Line Diagram

units can be connected to the standby power system, for investment protection, in the event of loss of the plant ac electrical system.

9.4.2.2.1.5 Mechanical Equipment Areas HVAC Subsystem

The mechanical equipment areas HVAC subsystem serves the ancillary diesel generator room, demineralized water deoxygenating room, boric acid batching room, upper south air handling equipment room, and lower south air handling equipment room in the annex building.

The mechanical equipment areas HVAC subsystem consists of two 50-percent capacity air handling units (VXS-MS-07A and B) with supply fans and return/exhaust fans of about 2,200 scfm each, a ducted supply and return air system, automatic controls, and accessories.

The air handling units are located in the lower south air handling unit equipment room on elevation 135′-3″ of the annex building. They are supplied from the air intake plenum #2 located at the extreme south end of the annex building between elevation 135′-3″ and 158′. This plenum also supplies air for the radiologically controlled area ventilation system, the health physics and hot machine shop HVAC system and the containment air filtration system. The intake is not protected from tornado missiles.

The ancillary diesel generator room is supplied air from the air handling units to maintain normal design temperatures. Air supplied to the room is exhausted direct to outdoors by means of a separate exhaust fan. Ventilation and cooling for the room when the ancillary diesel generators operate is provided by means of manually operated dampers and opening doors to allow ~~radiator discharge air to be exhausted direct to outdoors~~ airflow through the radiator, which is discharged outdoors.

9.4.2.2.1.6 Valve/Piping Penetration Room HVAC System

The valve/piping penetration room HVAC subsystem serves the valve/piping penetration room on elevation 100′-0″ of the auxiliary building. The valve/piping penetration room HVAC subsystem consists of two 100-percent-capacity air handling units (VXS-MS-08A and B) with supply fans of about 1,800 scfm each, a return air duct system, automatic controls, and accessories.

The air handling units are located directly within the space served.

9.4.2.2.2 Component Description

The annex/auxiliary buildings HVAC system is comprised of the following major components. These components are located in buildings on the Seismic Category I Nuclear Island or in the annex building. The seismic design classification, safety classification and principal construction code for Class A, B, C, or D components are listed in Section 3.2. Tables 9.4.2-1 and 9.4.2-2 provide the design parameters for major defense-in-depth components of the system.

Air Handling Units

Air handling units with integral supply and return/exhaust fans are utilized in the equipment room HVAC subsystem, switchgear room HVAC subsystem, and the mechanical equipment areas

Security-Related Information Withheld Under 10 CFR 2.390d

SRI

Figure 9A-3 (Sheet 1 of 3)

*[Annex I & II Building Fire Areas Plan at Elevation 100'-0" & 107'-2"]**

*NRC Staff approval is required prior to implementing a change in this information; see DCD Introduction Section 3.5.

Security-Related Information Withheld Under 10 CFR 2.390d

SRI

Figure 12.3-1 (Sheet 11 of 16)

Radiation Zones, Normal Operations/Shutdown
Annex Building, Elevation 100'-0" & 107'-2"

Security-Related Information Withheld Under 10 CFR 2.390d

SRI

Figure 12.3-2 (Sheet 11 of 15)

Radiation Zones, Post-Accident
Annex Building, Elevation 100'-0" & 107'-2"

Security-Related Information Withheld Under 10 CFR 2.390d

SRI

Figure 12.3-3 (Sheet 11 of 16)

Radiological Access Controls, Normal Operations/Shutdown
Annex Building, Elevation 100'-0" & 107'-2"