TABLE OF CONTENTS

Section	Title	Page
10.0	**MAIN STEAM AND POWER CONVERSION SYSTEMS**	
10.1	**SUMMARY DESCRIPTION**	**10.1-1**
10.2	**TURBINE-GENERATOR**	**10.2-1**
10.2.1	DESIGN BASES	10.2-1
10.2.2	DESCRIPTION	10.2-1
10.2.3	TURBINE ROTOR AND DISC INTEGRITY	10.2-5
10.2.3.1	MATERIALS SELECTION	10.2-5
10.2.3.2	FRACTURE TOUGHNESS	10.2-8
10.2.3.3	HIGH TEMPERATURE PROPERTIES	10.2-9
10.2.3.4	TURBINE DISC DESIGN	10.2-10
10.2.3.5	PRESERVICE INSPECTION	10.2-10
10.2.3.6	INSERVICE INSPECTION	10.2-12
10.2.4	EVALUATION	10.2-14
10.3	**MAIN STEAM SUPPLY SYSTEM**	**10.3-1**
10.3.1	DESIGN BASES	10.3-1
10.3.2	SYSTEM DESCRIPTION	10.3-1
10.3.2.1	SYSTEM DESIGN	10.3-1
10.3.2.2	MATERIAL COMPATIBILITY, CODES, AND STANDARDS	10.3-2
10.3.3	DESIGN EVALUATION	10.3-2
10.3.4	INSPECTION AND TESTING REQUIREMENTS	10.3-3
10.3.5	WATER CHEMISTRY	10.3-4
10.3.5.1	PURPOSE	10.3-4
10.3.5.2	FEEDWATER CHEMISTRY SPECIFICATIONS	10.3-4
10.3.5.3	OPERATING MODES	10.3-4
10.3.5.4	EFFECT OF WATER CHEMISTRY ON THE RADIOACTIVE IODINE PARTITION COEFFICIENT	10.3-5
10.3.6	STEAM AND FEEDWATER SYSTEM MATERIALS	10.3-6
10.3.6.1	FRACTURE TOUGHNESS	10.3-6
10.3.6.2	MATERIALS SELECTION AND FABRICATION	10.3-6
10.4	**OTHER FEATURES OF STEAM AND POWER CONVERSION SYSTEM**	**10.4-1**
10.4.1	MAIN CONDENSER	10.4-1
10.4.1.1	DESIGN BASES	10.4-1
10.4.1.2	SYSTEM DESCRIPTION	10.4-1
10.4.1.3	SAFETY EVALUATION	10.4-4
10.4.1.4	INSPECTION AND TESTING	10.4-5
10.4.1.5	INSTRUMENTATION	10.4-5
10.4.2	MAIN CONDENSER EVACUATION SYSTEM	10.4-5
10.4.2.1	DESIGN BASES	10.4-5
10.4.2.2	SYSTEM DESCRIPTION	10.4-5
10.4.2.3	SAFETY EVALUATION	10.4-6

TABLE OF CONTENTS

Section	Title	Page
10.4.2.4	INSPECTION AND TESTING	10.4-6
10.4.2.5	INSTRUMENTATION	10.4-6
10.4.3	TURBINE GLAND SEALING SYSTEM	10.4-7
10.4.3.1	DESIGN BASES	10.4-7
10.4.3.2	SYSTEM DESCRIPTION	10.4-7
10.4.3.3	SAFETY EVALUATION	10.4-7
10.4.3.4	INSPECTION AND TESTING	10.4-8
10.4.3.5	INSTRUMENTATION	10.4-8
10.4.4	TURBINE BYPASS SYSTEM	10.4-8
10.4.4.1	DESIGN BASES	10.4-8
10.4.4.2	SYSTEM DESCRIPTION	10.4-9
10.4.4.3	SAFETY EVALUATION	10.4-9
10.4.4.4	INSPECTION AND TESTING	10.4-10
10.4.4.5	INSTRUMENTATION	10.4-11
10.4.5	CONDENSER CIRCULATING WATER SYSTEM	10.4-11
10.4.5.1	DESIGN BASIS	10.4-11
10.4.5.2	SYSTEM DESCRIPTION	10.4-11
10.4.5.3	SAFETY EVALUATION	10.4-14
10.4.5.4	INSPECTION AND TESTING	10.4-14
10.4.5.5	INSTRUMENTATION APPLICATION	10.4-14
10.4.6	CONDENSATE POLISHING DEMINERALIZER SYSTEM	10.4-15
10.4.6.1	DESIGN BASES - POWER CONVERSION	10.4-15
10.4.6.2	SYSTEM DESCRIPTION	10.4-16
10.4.6.3	SAFETY EVALUATION	10.4-17
10.4.6.4	INSPECTION AND TESTING	10.4-18
10.4.6.5	INSTRUMENTATION	10.4-18
10.4.7	CONDENSATE AND FEEDWATER SYSTEMS	10.4-19
10.4.7.1	DESIGN BASES	10.4-19
10.4.7.2	SYSTEM DESCRIPTION	10.4-19
10.4.7.3	SAFETY EVALUATION	10.4-27
10.4.7.4	INSPECTION AND TESTING	10.4-29
10.4.7.5	INSTRUMENTATION	10.4-29
10.4.8	STEAM GENERATOR BLOWDOWN SYSTEM	10.4-29
10.4.8.1	DESIGN BASES	10.4-29
10.4.8.2	SYSTEM DESCRIPTION AND OPERATION	10.4-30
10.4.8.3	SAFETY EVALUATION	10.4-31
10.4.8.4	INSPECTIONS AND TESTING	10.4-32
10.4.9	AUXILIARY FEEDWATER SYSTEM	10.4-32
10.4.9.1	DESIGN BASES	10.4-32
10.4.9.2	SYSTEM DESCRIPTION	10.4-33
10.4.9.3	SAFETY EVALUATION	10.4-34
10.4.9.4	INSPECTION AND TESTING REQUIREMENTS	10.4-37
10.4.9.5	INSTRUMENTATION REQUIREMENTS	10.4-38

LIST OF TABLES

Section	Title
TABLE 10.1-1	(SHEET 1 OF 5) SUMMARY OF IMPORTANT COMPONENT DESIGN PARAMETERS VERTICAL STEAM GENERATORS
TABLE 10.1-1	(SHEET 2 OF 5) SUMMARY OF IMPORTANT COMPONENT DESIGN PARAMETERS (CONTINUED) MOISTURE SEPARATOR AND REHEATERS
TABLE 10.1-1	(SHEET 3 OF 5) SUMMARY OF IMPORTANT COMPONENT DESIGN PARAMETERS (CONTINUED) NO. 7 HEATER DRAIN PUMPS
TABLE 10.1-1	(SHEET 4 OF 5) SUMMARY OF IMPORTANT COMPONENT DESIGN PARAMETERS (CONTINUED) CONDENSER
TABLE 10.1-1	(SHEET 5 OF 5) SUMMARY OF IMPORTANT DESIGN PARAMETERS (CONTINUED)
TABLE 10.3-1	MAIN STEAM SUPPLY SYSTEM APPLICABLE CODES, STANDARDS, AND DESIGN CONDITION
TABLE 10.3-2	DELETED BY AMENDMENT 95
TABLE 10.3-3	DELETED BY AMENDMENT 43
TABLE 10.3-4	DELETED BY AMENDMENT 43
TABLE 10.4-1	AUXILIARY FEEDWATER PUMP PARAMETERS
TABLE 10.4-2	FAILURE ANALYSIS, STEAM GENERATOR BLOWDOWN SYSTEM
TABLE 10.4-3	FAILURE MODE & EFFECTS ANALYSIS STEAM SUPPLY SUBSYSTEM
TABLE 10.4-4	FAILURE MODE & EFFECTS ANALYSIS TURBINE-DRIVEN (TD) PUMP SUBSYSTEM (STEAM GENERATOR (SG) - LOOP NO. 4 TYPICAL
TABLE 10.4-5	FAILURE MODE & EFFECTS ANALYSIS MOTOR DRIVEN (MD) PUMP SUBSYSTEM (STEAM GENERATOR (SG) LOOP NO. 4 - TYPICAL)
TABLE 10.4-6	AUXILIARY FEEDWATER FLOW TO STEAM GENERATORS FOLLOWING AN ACCIDENT/TRANSIENT - GPM

LIST OF TABLES

Section	Title

THIS PAGE INTENTIONALLY BLANK

LIST OF FIGURES

Section	Title
FIGURE 10.1-1	POWERHOUSE UNITS 1 & 2 FLOW DIAGRAM GENERAL PLANT SYSTEMS
FIGURE 10.1-2	POWERHOUSE UNIT 2 MAXIMUM GUARANTEED HEAT BALANCE 100% MW THEMAL
FIGURE 10.1-3	DELETED BY AMENDMENT 95
FIGURE 10.2-1	POWERHOUSE UNIT 1 WIRING DIAGRAM TURBO-GENERATOR AUXILIARIES SCHEMATIC DIAGRAMS
FIGURE 10.2-2	POWERHOUSE UNIT 1 ELECTRICAL CONTROL DIAGRAM TURBO-GENERATOR CONT SYSTEM
FIGURE 10.2-2	POWERHOUSE UNIT 2 ELECTRICAL CONTROL DIAGRAM TURBO-GENERATOR CONT SYSTEM (SHEET A)
FIGURE 10.2-3	POWERHOUSE UNIT 1 ELECTRICAL CONTROL DIAGRAM TURBO-GENERATOR CONT SYSTEM
FIGURE 10.2-3	POWERHOUSE UNIT 2 ELECTRICAL CONTROL DIAGRAM TURBO-GENERATOR CONT SYS (SHEET A)
FIGURE 10.2-4	POWERHOUSE UNIT 1 ELECTRICAL CONTROL DIAGRAM TURBO-GENERATOR CONT SYSTEM
FIGURE 10.2-4	POWERHOUSE UNIT 2 ELECTRICAL CONTROL DIAGRAM TURBO-GENERATOR CONT SYSTEM (SHEET A)
FIGURE 10.3-1	POWERHOUSE UNIT 1 FLOW DIAGRAM - MAIN AND REHEAT STEAM
FIGURE 10.3-2	POWERHOUSE UNIT 1 ELECTRICAL CONTROL DIAGRAM - MAIN STEAM SYSTEM
FIGURE 10.3-3	POWERHOUSE UNIT 1 ELECTRICAL CONTROL DIAGRAM - MAIN STEAM SYSTEM
FIGURE 10.3-3 SH A	POWERHOUSE UNIT 1 ELECTRICAL CONTROL DIAGRAM MAIN STEAM SYSTEM
FIGURE 10.3-4	POWERHOUSE UNIT 1 ELECTRICAL CONTROL DIAGRAM MAIN STEAM SYSTEM
FIGURE 10.3-4 SH A	POWERHOUSE UNIT 1 ELECTRICAL CONTROL DIAGRAM MAIN STEAM SYSTEM
FIGURE 10.3-5	POWERHOUSE UNIT 1 ELECTRICAL LOGIC DIAGRAM MAIN AND REHEAT STEAM
FIGURE 10.3-6	POWERHOUSE UNIT 1 ELECTRICAL LOGIC DIAGRAM MAIN AND REHEAT STEAM
FIGURE 10.3-7	POWERHOUSE UNITS 1& 2 ELECTRICAL LOGIC DIAGRAM MAIN AND REHEAT STEAM

LIST OF FIGURES

Section	Title
FIGURE 10.3-8	DELETED BY AMENDMENT 95
FIGURE 10.3-9	POWERHOUSE UNITS 1 & 2 FLOW DIAGRAM FEEDWATER TREATMENT SECONDARY CHEMICAL FEED
FIGURE 10.4-1	POWERHOUSE UNIT 1 FLOW DIAGRAM TURBINE DRAINS AND MISCELLANEOUS PIPING
FIGURE 10.4-2	GENERAL UNITS 1 & 2 FLOW DIAGRAM CONDENSER CIRCULATING WATER
FIGURE 10.4-3	GENERAL UNIT 1 FLOW DIAGRAM CONDENSER CIRCULATING WATER
FIGURE 10.4-4	POWERHOUSE UNITS 1 & 2 ELECTRICAL CONTROL DIAGRAM CONDENSER CIRCULATING WATER SYSTEM
FIGURE 10.4-5	POWERHOUSE UNITS 1 & 2 ELECTRICAL CONTROL DIAGRAM CONDENSER CIRCULATING WATER SYSTEM
FIGURE 10.4-6	POWERHOUSE UNITS 1 & 2 ELECTRICAL LOGIC DIAGRAM CONDENSER CIRCULATING WATER SYSTEM
FIGURE 10.4-7	POWERHOUSE UNITS 1 & 2 FLOW DIAGRAM CONDENSATE
FIGURE 10.4-8	POWERHOUSE UNIT 1 FLOW DIAGRAM FEEDWATER
FIGURE 10.4-9	POWERHOUSE UNIT 1 ELECTRICAL CONTROL DIAGRAM CONDENSATE SYSTEM
FIGURE 10.4-10	POWERHOUSE UNIT 1 ELECTRICAL CONTROL DIAGRAM CONDENSATE SYSTEM
FIGURE 10.4-11	POWERHOUSE UNITS 1 & 2 ELECTRICAL CONTROL DIAGRAM CONDENSATE SYSTEM
FIGURE 10.4-11A	POWERHOUSE UNITS 1 & 2 ELECTRICAL CONTROL DIAGRAM CONDENSATE SYSTEM
FIGURE 10.4-12	POWERHOUSE UNITS 1 & 2 ELECTRICAL LOGIC DIAGRAM CONDENSATE SYSTEM
FIGURE 10.4-13	POWERHOUSE UNIT 1 ELECTRICAL LOGIC CONTROL DIAGRAM CONDENSATE SYSTEM
FIGURE 10.4-13A	POWERHOUSE UNIT 1 ELECTRICAL LOGIC DIAGRAM CONDENSATE SYSTEM
FIGURE 10.4-14	POWERHOUSE UNITS 1 & 2 ELECTRICAL CONTROL DIAGRAM MAIN AUXILIARY FEEDWATER SYSTEM
FIGURE 10.4-14	POWERHOUSE UNIT 1 ELECTRICAL CONTROL DIAGRAM MAIN AUXILIARY FEEDWATER SYSTEM (SHEET A)
FIGURE 10.4-14	POWERHOUSE UNIT 1 ELECTRICAL CONTROL DIAGRAM MAIN AUXILIARY FEEDWATER SYSTEM (SHEET B)

LIST OF FIGURES

Section	Title
FIGURE 10.4-14	POWERHOUSE UNIT 1 ELECTRICAL CONTROL DIAGRAM MAIN AUXILIARY FEEDWATER SYSTEM (SHEET C)
FIGURE 10.4-14	POWERHOUSE UNIT 1 ELECTRICAL CONTROL DIAGRAM MAIN AUXILIARY FEEDWATER SYSTEM (SHEET D)
FIGURE 10.4-15	POWERHOUSE UNIT 1 ELECTRICAL CONTROL DIAGRAM MAIN & AUX FEEDWATER SYSTEM
FIGURE 10.4-15	POWERHOUSE UNIT 1 ELECTRICAL CONTROL DIAGRAM MAIN & AUX FEEDWATER SYSTEM (SHEET A)
FIGURE 10.4-15	POWERHOUSE UNIT 1 ELECTRICAL CONTROL DIAGRAM MAIN & AUX FEEDWATER SYSTEM (SHEET B)
FIGURE 10.4-15	POWERHOUSE UNIT 1 ELECTRICAL CONTROL DIAGRAM MAIN & AUX FEEDWATER SYSTEM (SHEET C)
FIGURE 10.4-16	POWERHOUSE UNIT 1 AUXILIARY FEEDWATER SYSTEM CONTROL DIAGRAM
FIGURE 10.4-16A	POWERHOUSE UNIT 1 AUXILIARY FEEDWATER SYSTEM CONTROL DIAGRAM
FIGURE 10.4-17	POWERHOUSE UNITS 1 & 2 ELECTRICAL LOGIC DIAGRAM FEEDWATER PUMP TURBINE AUX
FIGURE 10.4-18	POWERHOUSE UNITS 1 & 2 ELECTRICAL LOGIC DIAGRAM FEEDWATER SYSTEM
FIGURE 10.4-19	POWERHOUSE UNIT 1 ELECTRICAL LOGIC DIAGRAM AUXILIARY FEEDWATER SYSTEM
FIGURE 10.4-20	POWERHOUSE UNITS 1 & 2 AUXILIARY FEEDWATER SYSTEM LOGIC DIAGRAM
FIGURE 10.4-21	POWERHOUSE UNITS 1 & 2 FLOW DIAGRAM AUXILIARY FEEDWATER
FIGURE 10.4-21A	POWERHOUSE UNITS 1 & 2 FLOW DIAGRAM MAIN & AUXILIARY FEEDWATER
FIGURE 10.4-22	DELETED BY AMENDMENT 82
FIGURE 10.4-23	DELETED BY AMENDMENT 82
FIGURE 10.4-24	POWERHOUSE UNITS 1 & 2 FLOW DIAGRAM STEAM GENERATOR BLOWDOWN SYSTEM
FIGURE 10.4-25	DELETED BY AMENDMENT 82
FIGURE 10.4-26	DELETED BY AMENDMENT 82
FIGURE 10.4-27	DELETED BY AMENDMENT 94
FIGURE 10.4-28	DELETED BY AMENDMENT 94
FIGURE 10.4-29	DELETED BY AMENDMENT 94

LIST OF FIGURES

Section	Title
FIGURE 10.4-30	DELETED BY AMENDMENT 94
FIGURE 10.4-31	DELETED BY AMENDMENT 94
FIGURE 10.4-32	DELETED BY AMENDMENT 94
FIGURE 10.4-33	DELETED BY AMENDMENT 94
FIGURE 10.4-34	DELETED BY AMENDMENT 94
FIGURE 10.4-35	DELETED BY AMENDMENT 94
FIGURE 10.4-36A	TURBINE BUILDING UNITS 1 & 2 FLOW DIAGRAM CONDENSATE DEMINERALIZER SYSTEM
FIGURE 10.4-36B	TURBINE BUILDING UNITS 1 & 2 FLOW DIAGRAM CONDENSATE DEMINERALIZER SYSTEM
FIGURE 10.4-36C	TURBINE BUILDING UNITS 1 & 2 FLOW DIAGRAM CONDENSATE DEMINERALIZER SYSTEM
FIGURE 10.4-37	DELETED BY AMENDMENT 94.

LIST OF FIGURES

Section **Title**

THIS PAGE INTENTIONALLY BLANK

LIST OF FIGURES

Section	Title

10.0 MAIN STEAM AND POWER CONVERSION SYSTEMS

10.1 SUMMARY DESCRIPTION

The steam and power conversion system is designed to convert the heat produced in the reactor to electrical energy through conversion of a portion of the energy contained in the steam supplied from the steam generators, to condense the turbine exhaust steam into water, and to return the water to the steam generator as heated feedwater.

The major components of the steam and power conversion system are: turbine-generator, main condenser, vacuum pumps, turbine seal system, turbine bypass system, hotwell pumps, demineralized condensate pumps, condensate booster pumps, steam-turbine-driven and electric-motor-driven main feed pumps, main feed pump turbines (MFPT), MFPT condenser-feedwater heaters, feedwater heaters, heater drain pumps, demineralizers, and condensate storage system. Component arrangement is shown in Figure 10.1-1. The heat rejected in the main condenser is removed by the circulating water system.

The saturated steam produced by the steam generators is expanded through the high pressure turbine and then exhausted to the moisture separator/reheaters. The moisture separator section removes the moisture from the steam and the two stage reheaters superheat the steam before it enters the low pressure turbines. The steam then expands through the low pressure turbines and exhausts into the main condenser where it is condensed and deaerated and then returned to the cycle as condensate.

The first stage reheater is supplied with steam from the No. 1 extraction point; the condensed steam is cascaded to the No. 2 heaters. The second stage reheater is supplied with main steam.The condensed steam cascades to the No. 1 heaters.

Condensate is withdrawn from the condenser hotwells by motor-driven hotwell pumps. The pumps discharge into a common header which normally carries the condensate through the gland steam condenser steam generator blowdown 2nd stage heat exchanger, the main feed pump turbine condensers, and then through three parallel strings of low-pressure heaters. This flow path can also split off to the steam generator blowdown 1st stage heat exchangers. Each string consists of three stages (Nos. 7 through 5, with No. 5 the highest pressure) of low-pressure extraction feedwater heaters to the condensate booster pumps. Whenever condensate demineralization is required, the common header for the hotwell pumps carries the condensate through the demineralizers to the gland steam condenser, steam generator blowdown 2nd stage heat exchanger, the main feed pump turbine condensers, and then to the demineralized condensate pumps. These pumps discharge to a common header which then carries the condensate through three parallel strings of low pressure heaters and to the suction of the condensate booster pumps. The condensate booster pumps discharge to a common header which divides the flow back into three parallel strings of intermediate pressure heaters, each string consisting of three stages (Nos. 4 through 2) of extraction feedwater heaters.

The condensate from the intermediate pressure heater strings is then routed to the main feed pumps. These pumps discharge to a common header which divides and passes through three parallel strings of single-stage high pressure heaters and returns to a common line before dividing into four streams to the four steam generators.

Heat for the feedwater heating cycle is supplied by the moisture separator reheater drains and by steam from the turbine extraction points. A summary description of the important components and design parameters of the steam and power conversion system is contained in Table 10.1-1. Heat balances for the steam and power conversion cycle are shown in Figure 10.1-2.

References

1. Westinghouse letter WAT-D-7489, “Watts Bar Nuclear Plant Numbers 1 and 2 - Main Steam Safety Valves Excess Blowdown Analysis - Phase 2,” August 28, 1987

Table 10.1-1 (Sheet 1 of 5)
Summary of Important Component Design Parameters
Vertical Steam Generators
(All Values Nominal)

Number	-	4 per unit
Length	-	812.0, in. (overall)
Diameter	-	176.28 in. (maximum) 0D
Heating surface	-	48,000 sq ft.
Tubes	-	4674 U-tubes - 0.75 in. 0D x 0.043 nom. wall, Inconel (ASME-SB-163) material

Operating conditions at 100 Percent Load

Steam flow rate	- 3.78 x E6 lb/hr
Steam temperature	- 542.9 deg F
Steam pressure	- 986 psia
Steam quality	- 99.75 percent minimum

TURBOGENERATOR

Manufacturer - Siemens Energy, Inc.
Turbo generator nameplate rating - 1,241.2 MW
Turbine type - Horizontal, reaction, tandem-compound,
two stage reheat, extraction, condensing
1800-rpm single shaft - 1 HP and 3 LP turbines
with 6-flow exhaust and 46 in. last-stage blades
Generator type and
maximum nameplate rating - One direct connected, hydrogen cooled
rotor, water-cooled stator,
1,411,000 kVA, 0.9 PF, 75 pisg
hydrogen, 3 phase, 60 Hz, 24,000 V,
33,943 Amp, 0.6 scr, Y-connected
Exciter type and capacity - One shaft-driven, brushless -
6000 kW, 550 volt DC, 1800 rpm

Heat Rate

Guaranteed performance based on extraction for feedwater heating, including all losses in the unit, also exciter and rheostat losses, rated throttle steam conditions, and 2.0 in. of Hg absolute exhaust pressure with zero makeup:

kW	Btu/kWh
1,218,225	9593

Table 10.1-1 (Sheet 2 of 5)
Summary of Important Component Design Parameters (continued)
Moisture Separator and Reheaters
(All Values Nominal)

Number - 6 per unit
Type - Moisture removal separator and 2-stage reheat (HP and LP)
Size - 51 ft - 8.25 inches length, 11 ft - 8.5 inches diameter

MAIN FEEDWATER PUMP TURBINE

See Section 10.4.7.2.

MAIN FEEDWATER PUMPS

See Section 10.4.7.2.

CONDENSATE BOOSTER PUMPS

See Section 10.4.7.2.

NO. 3 HEATER DRAIN PUMPS

Number - 3
Manufacturer - Borg-Warner Corporation, Byron-Jackson PumpDivision
Type - DSJH, sinqle stage, double suction, double volute, centrifugal
Size - 8 x 10 x 18H
Design point - 3600 gpm, 1200 ft head
Motor manufacturer - Parsons-Peebles, Ltd.
Motor design - 1250 HP, 3580 rpm, 6600 V, 3 ph, 60 Hz, horizontal, constant speed

Table 10.1-1 (Sheet 3 of 5)
Summary of Important Component Design Parameters (continued)
No. 7 Heater Drain Pumps
(All Values Nominal)

Number -	2
Manufacturer -	Borg-Warner Corporation, Byron-Jackson Pump Division
Type -	DSJH, sinqle stage, double suction, double volute, centrifugal
Size -	8 x 10 x 15L
Design point -	2000 gpm, 730 ft
Motor manufacturer -	Parsons-Peebles, Ltd.
Motor design -	450 HP, 3565 rpm, 6600 V, 3 ph, 60 Hz, horizontal, constant speed

CONDENSATE HOTWELL PUMPS

See Section 10.4.7.2.

DEMINERALIZED CONDENSATE PUMPS

See Section 10.4.7.2.

Table 10.1-1 (Sheet 4 of 5)
Summary of Important Component Design Parameters (Continued)
Condenser
(All Values Nominal)

Number -	1
Manufacturer -	Ingersoll-Rand Company
Type -	Horizontal, single shell, triple pressure, single pass, surface, deaerating
Total surface area, sq ft -	824,000
Tube data -	27,410 Tubes, 114 ft 8-1/2 in. effective length, welded, 1.0 in. outside diameter, Tubes are SEA-CURE, 104 tubes are 18 BWG (in the top row), the remaining 27,306 tubes are 22 BWG
Tube sheets -	Cooper bearing steel
Waterboxes -	Divided, two inlet (102 in. dia) and two outlets (102 in. dia) bottom connections per shell
Hotwell data -	Deaerating type, storage capacity of hotwell at normal operating level, 56,000 gal
Circulating water flow, gpm -	410,000
Cleanliness, percent -	95
Duty, 10^9 Btu/hr -	7.789
Design pressures:	Shell, psig - 25 and vacuum Hotwell, psig - 30 Waterboxes, psig - 72

Air Removal Equipment

Number -	3
Manufacturer -	Nash Engineering Company
Size -	AT2004E
Type -	Mechanical, vacuum (2 stage liquid ring)
Design point -	Suction pressure in. of Hg absolute - 1.0, Rated capacity, each - 15 SCFM
Motor Manufacturer -	General Electric Company
Motor design -	100 HP, 514 rpm, 460 V, 3 ph, 60 HZ horizontal, constant speed

FEEDWATER HEATER

See Section 10.4.7.2.

Table 10.1-1 (Sheet 5 of 5)
Summary of Important Design Parameters (continued)
Safety Valves
(All Values Nominal)

Number - 5 per steam generator
Minimum flow capacity, lb/hr steam generator - 4,160,597

Valve Mark No.	Set Press. (psig)	Accumu-lation Press. to fully Open Valve %	Max. Expected Accumu-lation Press at max Flow %	Press. in Steam Header at Rated Relieving Flow (psig)	Rated Flow at Set Pressure + 3% Accumu-lation (lb/hr)	Blowdown Press. Below Set Pressure to Close (%)[1]	Press. In. Steam Header at Valve Closing (psig)
47W400-101	1185	3	8.4	1284	791,563	10	1066.5
47W400-102	1195	3	7.4	1284	798,163	10	1075.5
47W400-103	1205	3	6.6	1284	804,764	10	1084.5
47W400-104	1215	3	5.7	1284	811,364	10	1093.5
47W400-105	1224	3	4.9	1284	817,304	10	1101.6

Note 1 - The licensing basis for the WBN plant is 10% maximum blowdown (See Reference [1]). This is more conservative than the 5% maximum blowdown specified by the ASME Section III requirements.

Atmospheric Relief Valves

Number 1 - per steam generator
Minimum capacity, lb/hr/inlet pressure, psig - 64,000/85
Maximum capacity, lb/hr/inlet pressure, psig - 970,000/1185
outlet pressure, psig - 0

Turbine Bypass Valves

Number of valves - 12
Flow per valve, lb/hr - 532,170
Main steam pressure at valve inlet (for above flow), psig - 900
Maximum flow per valve at 1185 psig inlet pressure, lb/hr - 970,000
Time to open (full stroke), $\leq$3 seconds (design)
Full stoke modulation, seconds 20
Failure position - Closed

THIS PAGE INTENTIONALLY LEFT BLANK

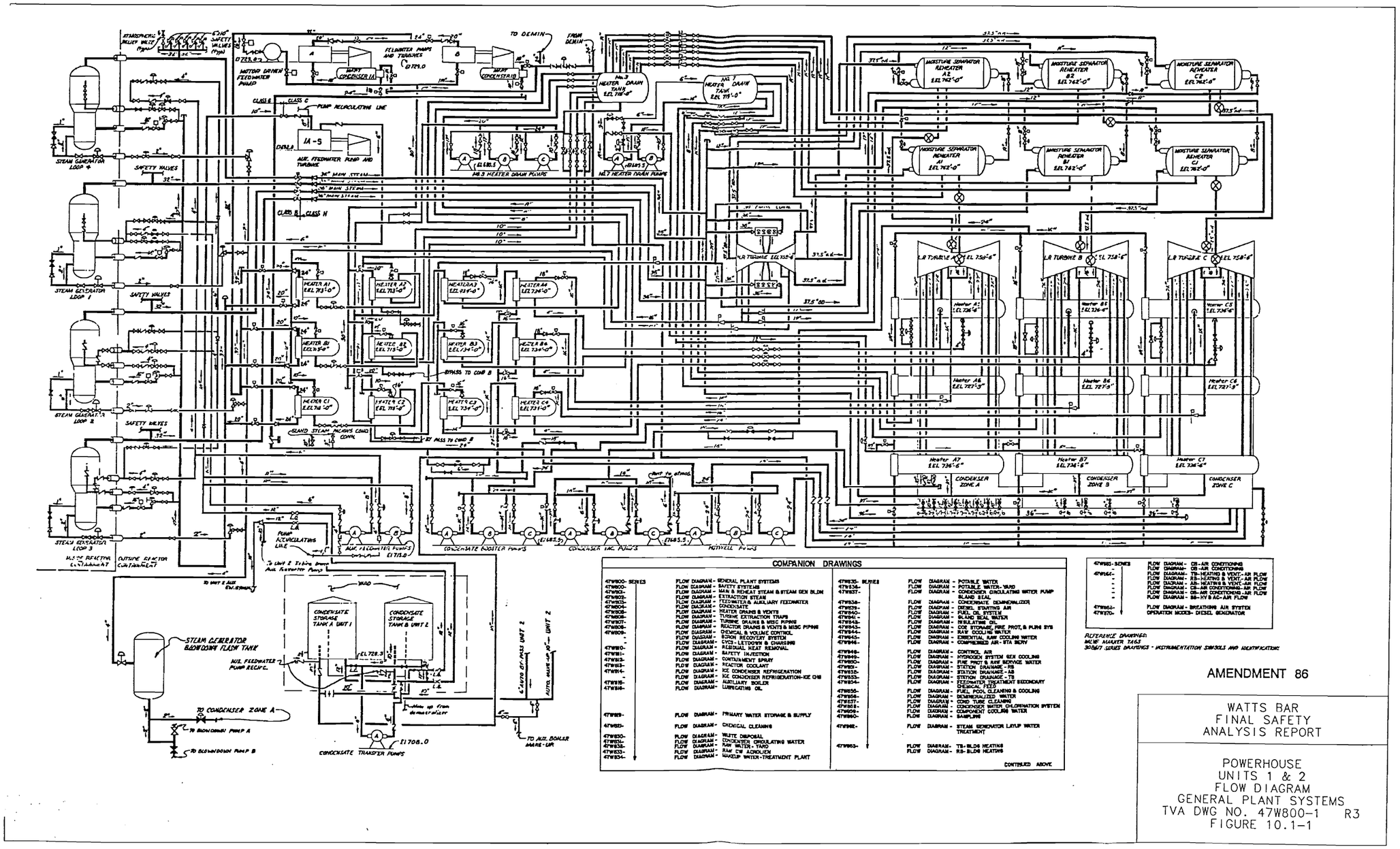

Figure 10.1-1 Powerhouse Units 1 & 2 Flow Diagram General Plant Systems

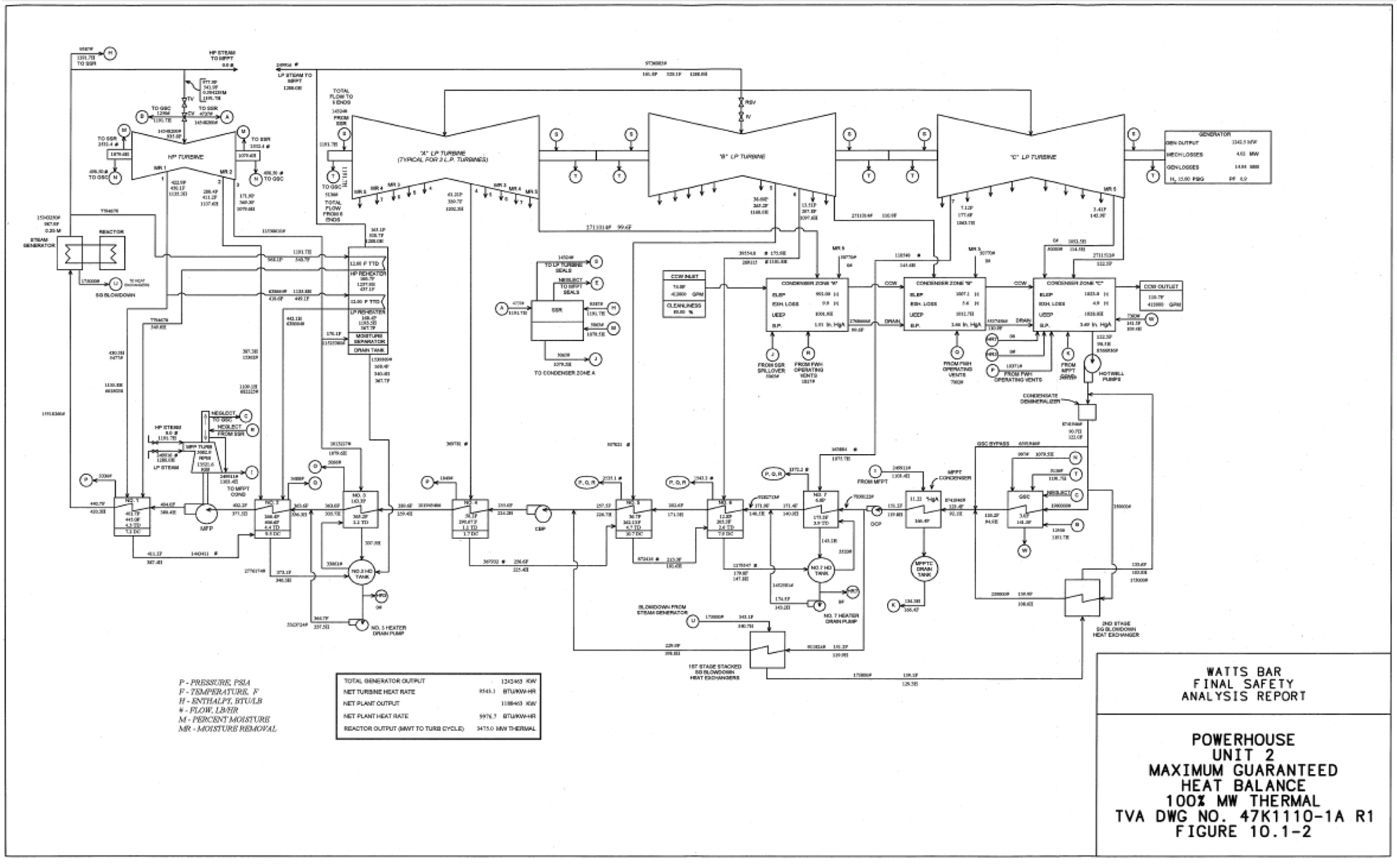

Figure 10.1-2 Powerhouse Unit 2 Maximum Guaranteed Heat Balance 100% MW Themal

Figure 10.1-3 Deleted by Amendment 95

THIS PAGE INTENTIONALLY BLANK

10.2 TURBINE-GENERATOR

10.2.1 Design Bases

The purpose of the turbine generator is to use steam supplied by the pressurized water reactor (PWR) in the conversion of thermal energy to electrical energy, and to provide extraction steam for feedwater heating. The turbine generator together with its associated systems and their control characteristics are integrated with the features of the reactor and its associated systems to obtain an efficient and safe energy conversion and power generation unit.

The turbogenerator unit receives steam from the four steam generators and converts the thermal energy to electric energy. The Siemens (formerly Westinghouse) turbine generator data is 1,241,200 kW when the steam flow is 14,565,293 lb/hr steam conditions of 985 psia, 0.25% (0.39% at turbine) moisture, and at a zonal back pressure of 1.92/2.70/3.75-inches of Hg absolute, with 0% makeup under normal conditions. At the valves wide open or stretch condition the generator is rated at 1,268,900 kW with a steam flow of 14,855,223 lb/hr at 985 psia, 0.31% moisture, at a back pressure of 2-inches of Hg absolute, and 0% makeup. Actual plant operating conditions and design will differ slightly from the rated parameters given above.

Under emergency conditions the turbine protection system provides the necessary protection for the turbine-generator equipment.

The intended mode of operation for the unit is to be utilized primarily as a base loaded unit.

10.2.2 Description

The turbine generator unit consists of the following components: turbine, generator, exciter, controls, and required support subsystems. The turbine is a tandem compound double-stage reheat unit with 46 inch last-stage blades. The turbine consists of a double-flow, high pressure turbine and three double-flow, low pressure turbines with extraction nozzles arranged for seven stages of feedwater heating. Exhaust steam from the unit passes through six moisture separator/reheaters before entering the low pressure turbines. The moisture separator/reheaters are shell and tube-type heat exchangers containing a section of chevron vanes for moisture separation. The chevron-type vanes alter the steam flow direction to reduce the moisture content of the steam through centrifugal separation of the moisture particles. Heating steam enters the reheater U-tube bundles to provide two stages of reheat for the steam flowing from the chevron section.

The generator is a direct-connected, hydrogen-cooled, 3 phase, 60 Hz, 24,000 volt, 1800 rpm synchronous generator rated at 1,411,000 kVA, 0.90 power factor (PF), with a short circuit ratio (scr) of 0.60. It is designed with conductor cooling of the armature winding. Hydrogen gas pressure is 75 psig and conductor coolant is demineralized water. The excitation system is rated at 6,000 kW and 550 volts.

The turbogenerator and its associated systems and controls are integrated with the reactor and its associated systems and controls at all times to obtain an efficient and safe energy conversion and power generator unit. The reactor controls enable the NSSS to follow plant (turbogenerator) load changes automatically, including the acceptance of step load increases or decreases of 10% and ramp increases or decreases of 5% per minute within the load range of 15% to 100% without reactor trip or steam dump. Manual control is required below 15% load. The difference between the highest measured average reactor coolant loop temperature and the programmed reference temperature (based on turbine impulse pressure) which is processed through a lead-lag compensation unit, constitutes the primary control signal for the reactor control system. An additional control input signal to the reactor is derived from the reactor power versus turbine load mismatch signal. These signals provide input to the rod control system to control the reactor coolant temperature by regulation of the control rod bank position.

The turbine control system is electrohydraulic and consists of several different control subsystems that are used to control turbine speed, plant load, speed and load rates, and other turbine features during plant startup, plant operation at rated conditions, and plant shutdown. Also, normal, pre-emergency, and emergency governing devices are incorporated into the control system to prevent turbine overspeed conditions.

The control system consists of five major components as follows:

(1) A solid-state electronic controller cabinet.

(2) An operator's panel.

(3) Steam valve servo-actuators.

(4) A high pressure fluid control system.

(5) A lube oil and associated mechanical-hydraulic emergency trip system.

The electronic controller cabinet contains circuits for the system such as logic, reference, signal input channels with solid-state operational amplifiers, and automatic and manual controllers. It performs basic analog computations on reference and turbine feedback signals and generates an output signal to the steam valve actuators.

The operator's panel is in the unit control center. Through various push buttons the operator can change the reference input to the electronic controller to vary the speed or load at different rates.

Operator settings made at the panel are used by the electronic controller to position the steam valves. The position of each steam valve is controlled by an actuator which consists of a hydraulic cylinder using fluid pressure to open and spring action to close. The cylinder is connected to a control block upon which are mounted isolation, dump, and check valves. (see Figures 10.2-2, 10.2-3, and 10.2-4 for steam, actuator, and other valve numbers and system arrangements).

The main stop (throttle) valve, reheat stop valve, and interceptor valve actuators position these steam valves (see FCV-1-61, -64, -67, -70, -87, -88, -94, -95 , -101, -102, -123, -124, -128, -129, -133, and -134 on Figure 10.2-3) only in the fully open or fully closed position (except for a brief period during startup when the main stop throttle valves (FCV-1-61, -64, -67, and 70) are used for initial speed control). High pressure fluid is supplied through an orifice to the area below the hydraulic cylinder piston. Fluid pressure in this area is controlled by a pilot-operated dump valve for the reheat stop and interceptor valves and by a servo- and/or pilot-operated dump valves for the main stop valves. With the turbine autostop mechanism latched, the pilot-operated dump valves close to build up fluid pressure under the cylinder piston, opening the reheat stop and interceptor valves. Solenoid valves provided for testing of the reheat stop and interceptor valves also open the dump valves, releasing the fluid to drain thus testing the valves capability to close.

The control (governor) valve actuators position these steam valves (FCV-1-62, -65, -68, and -71) in any intermediate position to proportionally regulate the steam flow to the required amount. The control (governor) and stop (throttle) valve actuators are provided with a servo-valve and a linear variable differential transformer (LVDT). High pressure fluid is supplied to the servo-valve which controls the actuator position in response to a position signal from the servoamplifiers. The LVDT develops an analog signal proportional to the valve position, which is fed back to the controller to complete the control loop. A signal can be introduced to the controller to test the main stop and control valves.

Isolation valves permit on-line maintenance of the actuator components, including the hydraulic cylinder. Check valves prevent fluid backflow from the drain or emergency trip circuits.

The function of the high pressure fluid control system is to provide a motive force which positions the turbine steam valves in response to electronic commands from the controller, acting through the servo-actuators. The fluid is stored in a reservoir assembly on which is mounted a duplicate system of fluid pumps, controls, filters, and heat exchangers. The system is so arranged that one pump and one set of the various control components function while the duplicate set serves as a standby system.

The turbine protection system has as its basis two serially connected fluid systems: the autostop oil system, and two parallel stop valve and control valve emergency trip fluid systems in the high pressure fluid control system (See Figures 10.2-2 and 10.2-3). Tripping of the control valve emergency trip fluid system causes trip closure of all control and intercept valves and also the extraction non-return valves (See XDV-47-27 on Figure 10.2-3). Tripping of the stop valve emergency trip fluid system causes tripping of all stop and reheat stop valves and also tripping of the control valve emergency trip fluid. Tripping of the autostop oil system causes tripping of the stop valve emergency trip fluid system. Two solenoid-operated valves (shown as FSV-47-26A and FSV-47-26B on Figure 10.2-1) are energized when turbine speed exceeds 103% of rated turbine speed releasing to drain the control valve emergency trip fluid and causing immediate closing of the control and interceptor valves. A check valve between the control valve emergency trip fluid circuit and the stop valve

emergency trip fluid circuit retains the fluid pressure in the latter line, and the reheat stop and main stop valves remain open. With a reduction in speed, the solenoid valves close and the control, interceptor, and extraction non-return valves reopen.

The stop valve emergency trip fluid system contains an interface emergency trip valve (FCV-47-27) and a solenoid valve (FSV-47-27) serving as a backup to the interface emergency trip valve which when activated, trips the turbine. The interface emergency trip valve uses lubricating oil from the mechanical-hydraulic trip system as its control medium. This trip valve, which is diaphragm operated, is the link between the high pressure fluid system and the mechanical-hydraulic lube oil trip system. Lube oil supplied to the interface trip valve acts to overcome a spring force to hold the valve closed. A decay in the lube oil pressure allows the spring to open the valve, dumping the high pressure operating fluid in the stop valve emergency trip fluid system to drain. High pressure operating fluid and lube oil are not in contact with each other.

The solenoid valve (FSV-47-27) may be activated by a pressure switch in the autostop lube oil header, a control room handswitch, or reactor or turbine trip signals (see Figure 10.2-1). When this valve is activated, the fluid in the stop valve fluid system is dumped to drain with all steam admission valves being tripped closed. The autostop oil system automatically trips (depressurizes) on evidence of low condenser vacuum, abnormal thrust bearing wear, or low bearing oil pressure. The autostop oil system is also equipped with a solenoid-operated trip device (FSV-47-24) which provides a means to dump the autostop oil to drain, and initiate direct tripping of the turbine upon receipt of appropriate electrical signals as shown on Figure 10.2-1. The autostop oil system and thus the turbine may be tripped manually on detection of high temperature differences between condenser shells, high exhaust hood temperature, high back pressure on the main condenser, high journal or thrust bearing metal temperature, excessive shaft vibration, high bearing oil discharge temperatures, or high differential expansion. When a turbine trip is initiated, the extraction system nonreturn valves are also tripped closed by means of a pilot dump valve (XDV-47-27) connected to the turbine trip system as shown on Figure 10.2-1.

Three types of overspeed protection mechanisms are provided to isolate main steam to the turbogenerator when the rated operating speed of 1800 rpm is exceeded. During normal speed-load control, the overspeed protection controller (OPC) which is set at 1854 rpm (103% of rated speed) will rapidly close the governor and interceptor valves in case of an overspeed condition. Rotational speed is then maintained below this setpoint by oscillating the interceptor valves between the closed and open position until the reheater steam (steam between the high pressure turbine exhaust and the low pressure turbines) is dissipated. If the control system is in speed control mode, the governor valves will take over speed control.

If for some reason the OPC control system does not function and the turbine speed increases to 1980 rpm (110% of rated speed), the mechanical overspeed mechanism will trip closed all steam valves (throttle, governor, reheat stop, and interceptor valves) and prevent the turbine speed from exceeding 120% of rated speed. The unit will then coast down to turning gear operation.

In addition to the two control systems described above, an independent electrical overspeed trip is provided in the Analog Electro Hydraulic (AEH) control system. If the turbine generator speed increases to 1998 rpm (approximately 111% of rated speed), all steam valves (as specified in the previous paragraph) trip closed. This trip actuates by a contact output from the AEH controller which energizes a trip solenoid in the auto stop oil line and a trip solenoid in the stop valve emergency trip fluid circuit. Again, during the overspeed condition, turbine speed remains below 120% of rated speed. The unit will then coast down to turning gear operation.

The turbine trip system is also equipped with solenoid-operated trip devices, which provide means to initiate direct tripping of the turbine upon receipt of appropriate electrical signals, as shown in Figure 10.2-1. Turbine governor functions and turbine control are discussed more fully in Section 7.7.

For over pressure protection of the turbine exhaust hoods and the condenser, four rupture diaphragms which rupture at approximately 5 psig are provided on each turbine exhaust hood. Additional protective devices include exhaust hood high temperature alarm and manual trip.

A discussion of turbine missiles is found in Section 3.5.

10.2.3 Turbine Rotor and Disc Integrity

The failure of a turbine disc or rotor might produce a high energy missile that could damage a safety-related component (see Section 3.5 for turbine missile analysis). The risk from missiles from a hypothetical turbine-generator failure on safety-related systems or components is discussed in Sections 3.5.1.3.3 through 3.5.1.3.6. Integrity of the turbine discs and rotors is demonstrated by information provided in this section.

10.2.3.1 Materials Selection

The detailed materials specifications, fabrication history, and chemical analysis of the disc and rotor forgings are considered proprietary information of the turbine manufacturer, Siemens (formerly Westinghouse Electric Corporation). The high pressure rotor is made of NiCrMoV alloy steel. The specified minimum mechanical properties are as follows:

Tensile Strength, psi	118,900
Yield Strength, psi (0.2% offset)	84,100 - 98,600
Elongation in 2-inches, percent	16
Reduction of Area, percent	50
Impact Strength, Charpy V-Notch, ft-lb (min. at room temperature)	66
50% Fracture Appearance Transition Temperature, degrees F, max.	-22

The HP inner casing and guide blade carriers are made of stainless steel castings. The HP outer casing cover and base are made of carbon-steel castings. The specified minimum mechanical properties are as follows:

Property	Guide Blade Carriers and Inner Casing	Outer Casing Base & Cover
Material	Modified ASTM A487 Grade CA15	ASTM A216 Grade WCB
Tensile Strength, psi	78,500 - 100,000	70,000
Yield Strength, psi	51,500	36,000
Elongation in 2-inches, percent	18	22
Reduction of Area, percent	45	35

The casing cover and base are tied together by means of more than 100 studs. For most of the horizontal joint, the stud material is an alloy steel; while in the blade ring fit and gland areas, the studs are upgraded to 12 Cr stainless steel. The bolting has the following minimum properties:

Property	**Low Alloy Steel Studs and Bolts**			**12 Cr Studs and Bolts**
	2-1/2 inch and less	**Over 2-1/2 to 4 inch**	**Over 4 to 7 inch**	**No Size Constraint**
	ASTM A193 Grade B7			Modified AISI 616
Tensile Strength, psi	125,000	115,000	110,000	135,000
Yield Strength, (0.2% offset), psi	105,000	95,000	85,000	110,000
Elongation in 2-inches, percent	16	16	16	14
Reduction of area, percent	50	50	45	32

The low pressure rotors are made of NiCrMoV alloy steel. The specified minimum mechanical properties are as follows:

Property	Rotor Shaft
Tensile Strength, psi	149,390
Yield Strength, psi (0.2% offset)	107,300 - 121,800
Elongation in 2-inches, percent	15
Reduction of Area, percent	45
Impact Strength, Charpy V-Notch, ft-lb (at room temperature)	74
50% Fracture Appearance Transition Temperature °F, (max.)	-58

The LP outer cylinder and inner casing are fabricated mainly of carbon steel plate material. The minimum specified properties are as follows:

Property	Outer Cylinder	Inner Casing
	ASTM A515 - GR65	ASTM A515- GR60, GR65, GR70*
Tensile Strength, psi	65,000	56,500 - 76,900
Yield Strength, psi	35,000	26,800 - 38,400
Elongation in 8 ft, percent	19	22
Elongation in 2 ft, percent	23	22

*Note: Grade of material depends upon location within LP inner casing fabrication and plate thickness.

The shrunk-on discs are made of NiCrMoV alloy steel. There are six discs shrunk on the shaft with three per flow. The minimum specified mechanical properties for the discs are as follows:

	Disc 1	**Discs 2 and 3**
Tensile Strength, psi	146,500	153,700
Yield Strength, psi	113,100 - 123,300	118,900 - 129,100
Elongation in 2 ft (disc hub) percent	15	15
Elongation in 2 ft (disc rim) percent	15	15
Reduction of area (disc hub) percent	50	50
Reduction of area (disc rim) percent	50	50

	Disc 1	Discs 2 and 3
Impact strength (hub and rim) Charpy V-Notch, ft-lb (at room temp)	96	96
50% Fracture Appearance Transition Temp. (disc hub and rim) °F (max)	-112	-112

10.2.3.2 Fracture Toughness

Fracture mechanics analysis by the Siemens Methodology is described in the missile report. A brief description of the analytical method employed is given in the following paragraphs.

First, the critical flaw size is determined using the equation for a semi-elliptical surface flaw with the major axis of the crack normal to the applied stress:

$$a_{CR} = \frac{Q}{1.21\pi}\left(\frac{K_{IC}}{\sigma_{eff}}\right)^2$$

where

a_{CR} = Critical flaw size

K_{IC} = Fracture toughness

σ_{eff} = Effective tangential bore stress

Q = Flaw shape parameter

Stress corrosion cracking (SCC) rate is assumed to be independent of the stress intensity level. The main parameters influencing the SCC rate are temperature, material yield strength and water chemistry. Based on field measurements and laboratory test data, empirical equations for SCC rates were developed. For the probabilistic analysis, the following SCC rate is used:

$$\frac{da}{dt} = \exp\left(-4.968 - \frac{7302}{T + 460} + 0.0278 \cdot \sigma_y\right)$$

Where:

(da/dt) = SCC rate given in inches/hour

T = Temperature in °F

σ_y = Yield strenth in ksi

For probabilistic computations, Siemens has developed a numerical Monte-Carlo simulation code, PDBURST. As a failure condition, the brittle fracture mode is assumed:

$$a_{cr}(K_{Ic}, \sigma_y, \sigma, \zeta, k) \leq a_i + \int_o^t a(\sigma_y, T)dt$$

Where:

a_{cr} = Critical crack size,
a = Current crack size,
a_i = Initial crack size,
t = Operating time duration,
ζ = Crack shape factor (crack depth to crack length ratio),
K_{Ic} = Fracture toughness,
k = Branching factor,
σ = Applied load due to tangential stress at bore,
σ_y = Yield strength,
T = Temperature.

For probabilistic analysis the critical crack size is defined as that given by the equation shown or 100 mm whichever is smaller. The 100 mm limit is purely based on the applicability limitation of linear-elastic fracture mechanics concept and does not necessarily represent an imminent burst condition.

In the Monte-Carlo simulation, disc property inputs include disc metal temperature, disc tangential bore stress, fracture toughness, disc yield strength, disc crack initiation probability based on historical data and standard deviation values. Typically, one million simulations are run to determine how many failures occur as a result of crack initiation and growth to critical crack size.

10.2.3.3 High Temperature Properties

The stress-rupture properties of the high pressure rotor material are considered to be proprietary information of the turbine manufacturer, Siemens.

10.2.3.4 Turbine Disc Design

Information on the tangential and radial stresses in the low pressure discs and low pressure rotors is considered proprietary information of the turbine manufacturer, Siemens.

10.2.3.5 Preservice Inspection

10.2.3.5.1 Low Pressure Turbine Rotor

The low pressure turbine rotor and discs are heat treated nickel-chromium-molydenum-vanadium alloy steel procured to specifications that define the manufacturing method, heat treating process, and the test and inspection methods. Specific tests and test documentation, in addition to dimensional requirements, are specified for the forging manufacturer.

The low pressure turbine rotor has the following inspections and tests conducted at the forging manufacturer's plant:

(1) A ladle analysis of each heat of steel for chemical composition is to be within the limits defined by the specification.

(2) Following preliminary machining and heat treatment for mechanical properties but prior to stress relief, all rotor diameters and faces are subjected to ultrasonic tests defined in detail by a Siemens specification which is similar to the requirements of ASTM A-418.

(3) After all heat treatment has been completed, the rotor forging is subjected to a thermal stability test defined by a Siemens specification which is more restrictive than the requirements of ASTM A-472.

(4) The end faces of the main body and the fillet areas joining the body to the shaft ends of the machined forging are subjected to a magnetic particle surface inspection as defined by ASTM A-275.

(5) Utilizing specimens removed from the rotor forging at specified locations, tensile, Charpy V Notch impact and FATT properties are determined following the test methods defined by ASTM A-370.

The low pressure turbine rotor discs have the following inspections and tests conducted at the forging manufacturer's plant:

(1) The ladle analysis of each heat of steel is to be within the composition limits defined by the specification.

(2) After all heat treatment, rough machining and stress relief operations, the hub and rim areas of the completed disc forging are subjected to ultrasonic examinations. These ultrasonic tests are defined by a Siemens specification which exceeds the requirements of ASTM A-418.

(3) The tensile, Charpy V Notch impact and FATT properties are determined from specimens removed from the discs at specific locations. The test methods used for determining these mechanical properties are defined by ASTM A-370.

(4) If ultrasonic examination shows indications in the near surface area of the disc bore, a magnetic particle inspection is required.

(5) During heat treatment of the disc, special requirements are applied to ensure that compressive residual stresses shall be induced in the bore by intensive cooling.

After the preheated discs are assembled to the rotor body to obtain the specified interference fit, Disc 1 holes are drilled and reamed for axial locking pins at the rotor and disc interface. Discs 2 and 3 rely upon shrink fit only. Prior to shipping, each fully bladed rotor is balanced and tested to 120% of rated speed in a shop heater box.

10.2.3.5.2 High Pressure Turbine Rotor

The high pressure turbine rotor for low temperature light water reactor applications has the same basic material composition as the low pressure rotors. This nickel-chromium-molybdenum-vanadium alloy steel forging is procured, processed, and subjected to test and inspection requirements the same as the low pressure rotor, which include:

(1) Ladle analysis

(2) Ultrasonic tests

(3) Magnetic particle inspection

(4) Thermal stability test

(5) Tensile and impact mechanical properties

(6) Heater box and 120% speed test

10.2.3.5.3 Preoperational and Initial Startup Testing

These tests are documented in Chapter 14.0.

10.2.3.6 Inservice Inspection

10.2.3.6.1 Turbine Rotors

To help guard against possible failure of low pressure nuclear steam turbine discs, Siemens has developed an ultrasonic inservice inspection method for these discs. The program includes methods and hardware for field inspection of LP turbine discs for incipient cracking located at the bore surface and particularly at the keyways.

The inspection intervals recommended by Siemens and based on NRC criterion are 100,000 operating hours. In addition, if there is evidence of significant corrosion found during any of the low pressure turbine rotor inspections, Siemens will be consulted and the inspection intervals adjusted accordingly. If measurable cracks are detected, the inspection intervals will be adjusted after considering Siemens recommendations. The disc inspection will be performed by personnel that are expert and highly skilled in their field.

10.2.3.6.2 Turbine Overspeed Protection

In order to assure that the Turbine Overspeed Protection System (TOPS) continues to carry out its design function in a highly reliable manner, a rigorous program of inspecting, testing, maintaining, and calibrating the various parts of the TOPS has been developed. The development of this program has considered the recommendations of Siemens. Various aspects of the TOPS inspection program such as scope and frequency of test, inspections, and other pertinent items are described in the following paragraphs.

The TOPS include the following major component groups:

(a) Turbine valves which control or prevent steam admission into either the high pressure or low pressure turbines.

(b) The control valve emergency trip, stop valve emergency trip, and autostop oil trip systems which include the mechanical overspeed trip, electrical overspeed trip, and the overspeed protection controllers (See Section 10.2.2 for additional details).

The throttle valves, governor valves, reheat stop valves and reheat intercept valves will be tested and visually checked after each turbine startup and at intervals of approximately 6 months to verify complete freedom of valve stem travel. The interval of valve testing may be changed based on plant conditions or overall TVA power system conditions. For example, if equipment necessary to shut the unit down is inoperable, the valve testing would be postponed to avoid the potential for tripping the unit. Also, if the demand for power on the TVA system is large enough that the loss of a unit would create a shortage of power to the system, the testing would wait until more favorable conditions exist. The interval for testing turbine valves shall not exceed 1.25 times the required test interval without prior approval of the plant manager, and no more than two consecutive tests shall be deferred without the prior review and approval by the Plant Operations Review Committee (PORC). Extraction and moisture

separator reheater (MSR) drain non-return valves will be tested monthly. Additionally, one or more of each valve type will be disassembled and inspected during outages with all throttle and governor valves being disassembled and inspected initially at least once every 39 operating months with the interval being reevaluated later if there are no significant valve problems or defects. All of the remaining valves (reheat stop, reheat intercept, and above non-return valves) will be disassembled and inspected at least once every 60 operating months (once every three refueling cycles). If during the inspection of one type of valve a problem or defect is noted, all similar valves will be disassembled and inspected. These inspections will consist of detailed dimensional and related checks to assure that critical clearances and fits are maintained with the manufacturer's recommendations.

The overspeed trip oil device which provides an interface between the autostop oil trip system and the mechanical overspeed trip is tested at approximately monthly (Unit 2) / quarterly (Unit 1) intervals. This device utilizes high pressure oil to force the overspeed trip weight outward against spring force until it strikes the trigger and actuates an overspeed trip. The above test simulates an actual overspeed trip by comparing the oil pressure at which the mechanism operates with previous test readings. No steam admission or control valves are actuated which allows on-line testing of this feature. This testing is also repeated following repair or adjustment to the turbine electrohydraulic control system.

Additionally, during unit startup prior to synchronizing the unit, if the turbine remote and overspeed trips have not been tested during the previous six months of operation, the remote solenoid, the overspeed protection controller, the mechanical overspeed, and the backup electrical overspeed trips will each be actuated to verify proper turbine and valve action. If the unit operates continuously for periods longer than six months and there have been no significant problems with the overspeed trip weight mechanism, the above remote and overspeed tests will be deferred until the unit is shutdown and performed during the subsequent startup. The remote solenoid and overspeed trip tests will trip the turbine and close all throttle, governor, reheat intercept, and reheat stop valves. The overspeed protection controller trip test includes verification of closure of the turbine governor and reheat intercept valves.

The monthly (Unit 2) / quarterly (Unit 1) on-line test of the mechanical overspeed trip device and the six month off-line test of the turbine remote and overspeed trips will not be deferred for longer than 1.25 times the required test interval without the performance of an engineering evaluation and the review and approval of the PORC.

Calibration and checks of TOPS overspeed protection circuits overspeed controller and components (speed sensors, including OPC and electrical trip sensors, pressure sensors, load sensors, reference signals, comparators, relays, solenoid valves, etc.) is performed during each refueling outage (approximately once every 18 months) or following major modifications or adjustments to this system. These calibrations and checks can only be performed safely with the unit off-line.

10.2.3.6.3 Other Turbine Protection Features

There are other turbine protection features which serve to trip the turbine during abnormal operation (see Section 10.2.4 for a list of mechanical and electrical turbine trips). Inspections, tests, maintenance, and calibrations of these components will be based on Siemens recommendations.

10.2.4 Evaluation

The following operational occurrences can be caused by operation of turbine, generator, or distribution system protection equipment:

(1) Turbine trip due to turbine abnormalities.

(2) Turbine trip due to generator abnormalities.

(3) Transients due to rapid load changes or system abnormalities.

Turbogenerator protective trips that will automatically trip the turbine due to turbine (mechanical) and generator (electrical) abnormalities are tabulated below. Reactor trip and AMSAC signals will also automatically trip the turbine.

(I) Automatic Turbine Trips Due To Turbine (Mechanical) Abnormalities

(1) Low Bearing Oil Pressure Trip

(2) Low Vacuum Trip

(3) High Thrust Bearing Wear Trip

(4) Low Differential Water Pressure Across Generator Stator Coils Trip (Alarm only below 15% power)

(5) High Stator Coil Outlet Water Temperature Trip (Alarm only below 15% power)

(6) Low Auto Stop Oil Pressure Trip

(7) 111% Rated Speed Electrical Overspeed Trip

(8) 110% Rated Speed Mechanical Overspeed Trip

(9) EHC dc Power Failure Trip

(10) Loss of Both Main Feedwater Turbines Trip

(11) Steam Generator High-High Level Trip

(II) Automatic Turbine Trips Due To Generator (Electrical) Abnormalities

(1) Generator Differential Current Trip

(2) Generator System Ground Fault Trip

(3) Generator Time Overcurrent (Voltage Supervised) Trip

(4) Generator Negative Sequence Trip

(5) Generator Backup and Main Transformer Feeder Differential Trip

(6) Generator Loss of Field Trip

(7) Generator Over-volts per hertz trip

(8) Generator Reverse Power Trip

(9) Unit Station Service Transformer A Overcurrent Trip

(10) Unit Station Service Transformer B Overcurrent Trip

(11) Main Transformer Sudden Pressure Trip

(12) Main and Unit Station Service Transformers Differential Trip

(13) Unit 1, 500 kV Breaker Failure Trip

(14) Unit 1, 500 kV Bus 2 Differential Trip (trips both units if Bus 1 is de–energized)

(15) Unit 2, 500 kV Breaker Failure Trip

(16) Unit 2, 500 kV Bus 1 Differential Trip (trips both units if Bus 2 is de–energized)

(17) 1 and/or 2 Generator Breaker Open

The analyses of the consequences of the most severe of these events with respect to reactor safety are discussed in Chapter 15.

There can be any number of component or system operational abnormalities that can be postulated to produce a turbogenerator load transient. However, since the effects of such abnormalities can be no worse than a turbine or generator trip, these occurrences are not formally listed.

Any noble gas activity in the secondary system as well as the particulate activity present due to moisture carryover from the steam generators enters the high pressure turbine.

The subsequent activity entering the low pressure turbine is reduced due to the moisture separation that occurs between the exit of the high pressure turbine and the entrance to the low pressure turbines. Radiation monitors are installed to monitor steam generator blowdown and condenser vacuum pump exhaust flows for particulate

and airborne radioactivity. Details of the radiological evaluation of the condenser evacuation system are contained in Chapter 11.

Activity levels in the turbine are expected to be very low and all necessary shielding is provided by the piping, turbine casing, and other components. If any additional shielding is required in local areas, it will be provided so that unlimited access to the turbine area is possible. Shielding design is discussed further in Section 12.3.2.

The main steam stop (throttle) and control (governor) and reheat stop and interceptor valves are capable of fast closure upon receipt of a closure signal. Each of the four throttle valves is arranged with a paired governor valve and each of the six reheat stop valves is arranged in series with an interceptor valve.

If the turbine unit should overspeed, the overspeed protection controller (OPC) will open two solenoid valves (FSV-47-26A and FSV-47-26B) and dump the control fluid from the control and interceptor valves (causing the valves to rapidly close) at 103% of rated turbine speed. If the turbine speed should continue to increase to 110%, the mechanical overspeed trip mechanism will actuate a hydraulic dump valve which dumps autostop oil to drain. Depressurization of the autostop oil system then causes FCV-47-27 to open and depressurize both the stop and control valve emergency trip fluid systems which causes all control, stop, reheat stop, and interceptor valves to trip close (see Figure 10.2-3). Concurrently with the above trip fluid action, an independent, redundant electrical trip signal is also generated when the autostop oil system is depressurized which energizes FSV-47-24 and FSV-47-27 to independently depressurize both the stop and control valve emergency trip fluid systems and thus cause all of the above steam valves to trip closed (See Figure 10.2-1). In addition to the above mechanical overspeed trip, an independent electrical overspeed trip will also energize both of the above solenoid valves (FSV-47-24 and FSV-47-27) at 111% of rated speed to depressurize the autostop oil, and the stop valve emergency trip fluid, and thus trip all of the above steam valves closed.

Redundancy in the overspeed protection system is assured by independent mechanical and electrical overspeed trips, a separate overspeed controller, redundant electrical trip circuitry, serial and parallel trip fluid systems, and double isolation in the steam systems. A single failure will not prevent the overspeed protection system from tripping the turbine. Since the electrical and mechanical overspeed trips are independent, only one of these trips needs to function to trip the turbine. The electrical trip circuitry and the trip fluid systems are designed such that if the single failure occurred in these systems, the overspeed protection system will still perform its intended function. Isolation of either the stop valves or control valves upstream of the high pressure turbine and of either the reheat stop valves or intercept valves upstream of the low pressure turbines will prevent steam from entering the turbine and, consequently, limit the overspeed to within the acceptable range. Therefore, the single failure of a steam valve or any other component in the overspeed protection system will have no effect on the overspeed protection system performing its intended protection function.

A turbine trip signal also generates an electrical trip signal which deenergizes the solenoid dump valves on the power assist non-return valves in the Number 1, 2, 3, and 4 extraction lines and the MSR drain lines. When the above solenoid dump valves are deenergized, a quick exhauster vents the air from the power assist non-return valve cylinder allowing a spring loaded piston to provide positive force to close the above non-return valves. Concurrently, the above turbine trip signal also activates a fluid operated air pilot valve, XDV-47-27 (see Figure 10.2-3). If the above solenoid dump valves fail to deenergize, this valve (XDV-47-27) will vent the air from the non-return valve cylinders causing the non-return valves to close. In either of the above cases, the non-return valves will close prior to flow reversal occurring in these extraction and MSR drain lines. Consequently, the above heaters and MSR drains cannot 'flash back' and cause or significantly contribute to a turbine overspeed situation.

Since heaters 5, 6, and 7 are located in the condenser neck, physical piping arrangements and economic considerations prohibit the use of non-return valves in these extraction lines. However, anti-flash baffles in the heater shells (sized in accordance with the turbine manufacturer's recommendations) restrict the reverse flow from these heaters to a sufficiently low flow so that it cannot adversely affect turbine overspeed or thermally shock the LP turbine.

REFERENCES

(1) None

THIS PAGE INTENTIONALLY BLANK

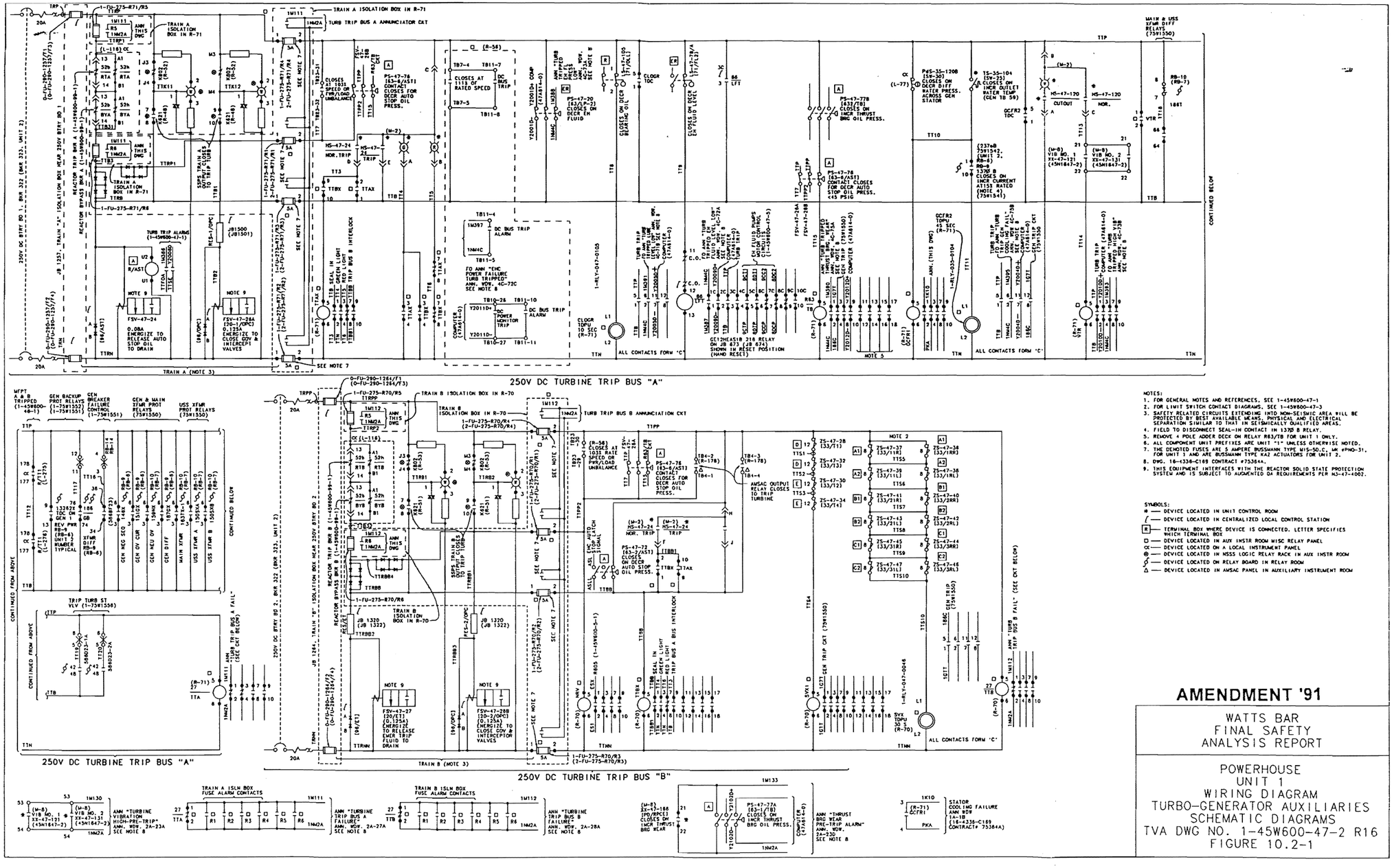

Figure 10.2-1 Powerhouse Unit 1 Wiring Diagram Turbo-Generator Auxiliaries Schematic Diagrams

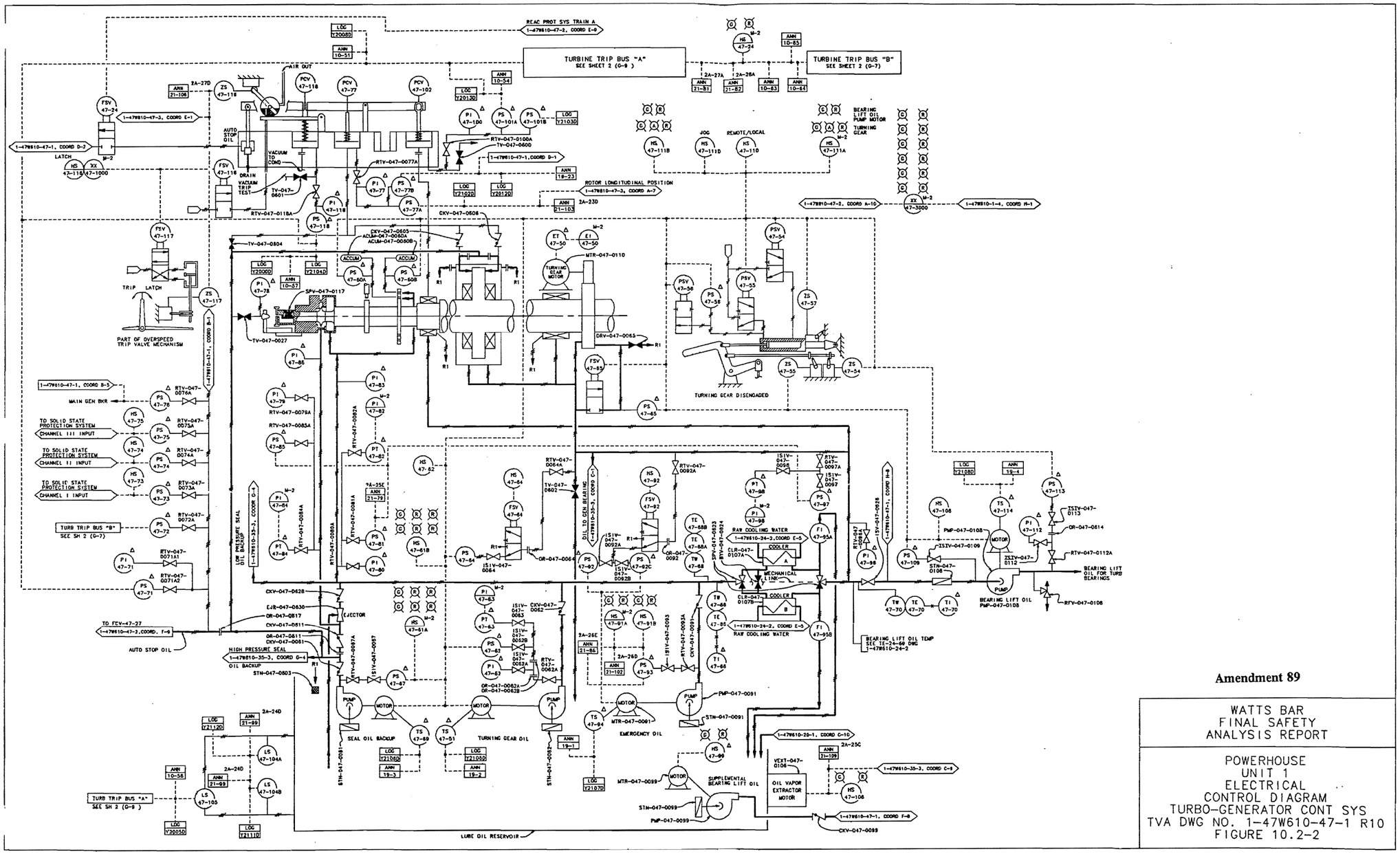

Figure 10.2-2 Powerhouse Unit 1 Electrical Control Diagram Turbo-Generator Cont System

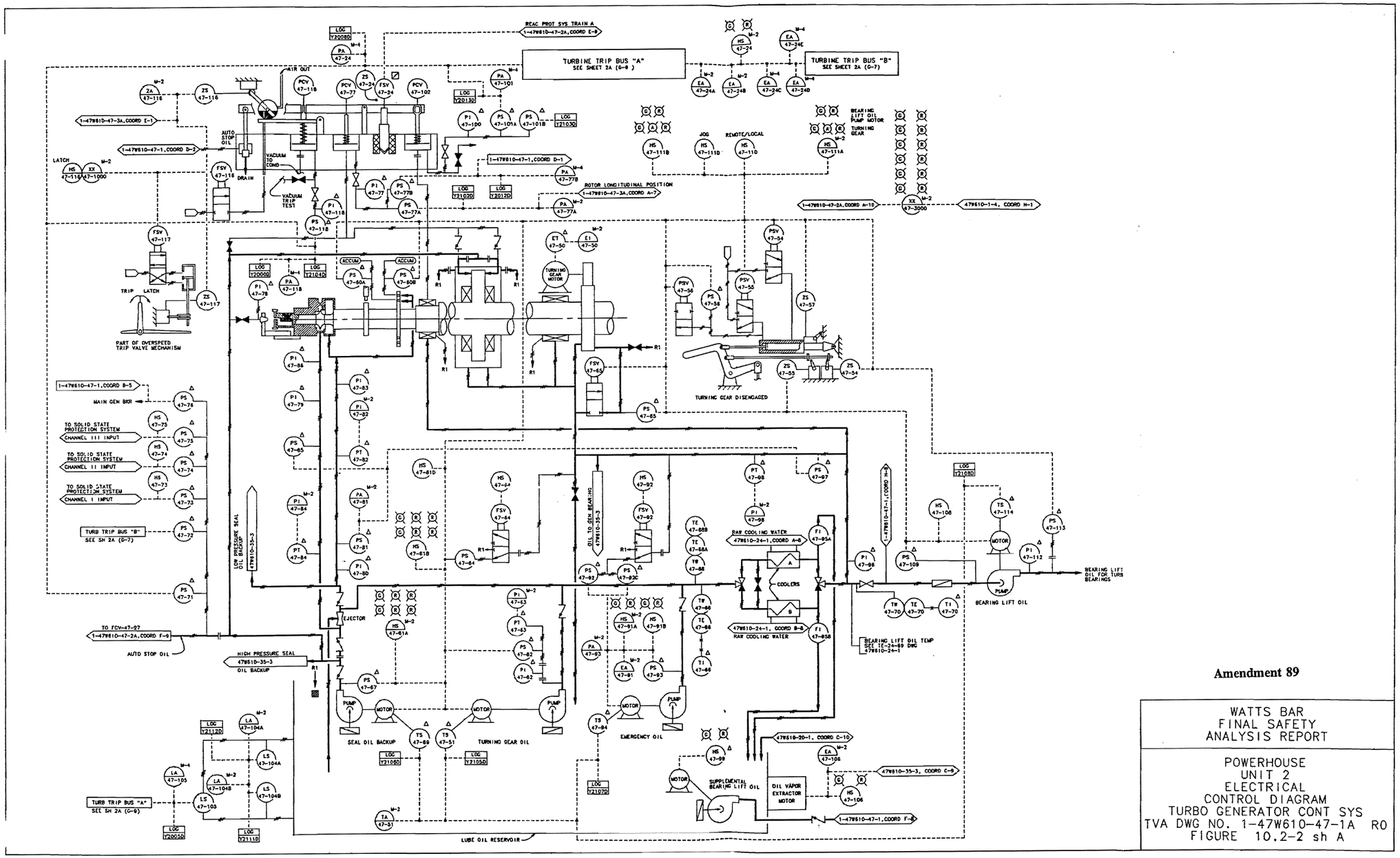

Amendment 89

WATTS BAR
FINAL SAFETY
ANALYSIS REPORT

POWERHOUSE
UNIT 2
ELECTRICAL
CONTROL DIAGRAM
TURBO GENERATOR CONT SYS
TVA DWG NO. 1-47W610-47-1A R0
FIGURE 10.2-2 sh A

Figure 10.2-2 Powerhouse Unit 2 Electrical Control Diagram Turbo-Generator Cont System (Sheet A)

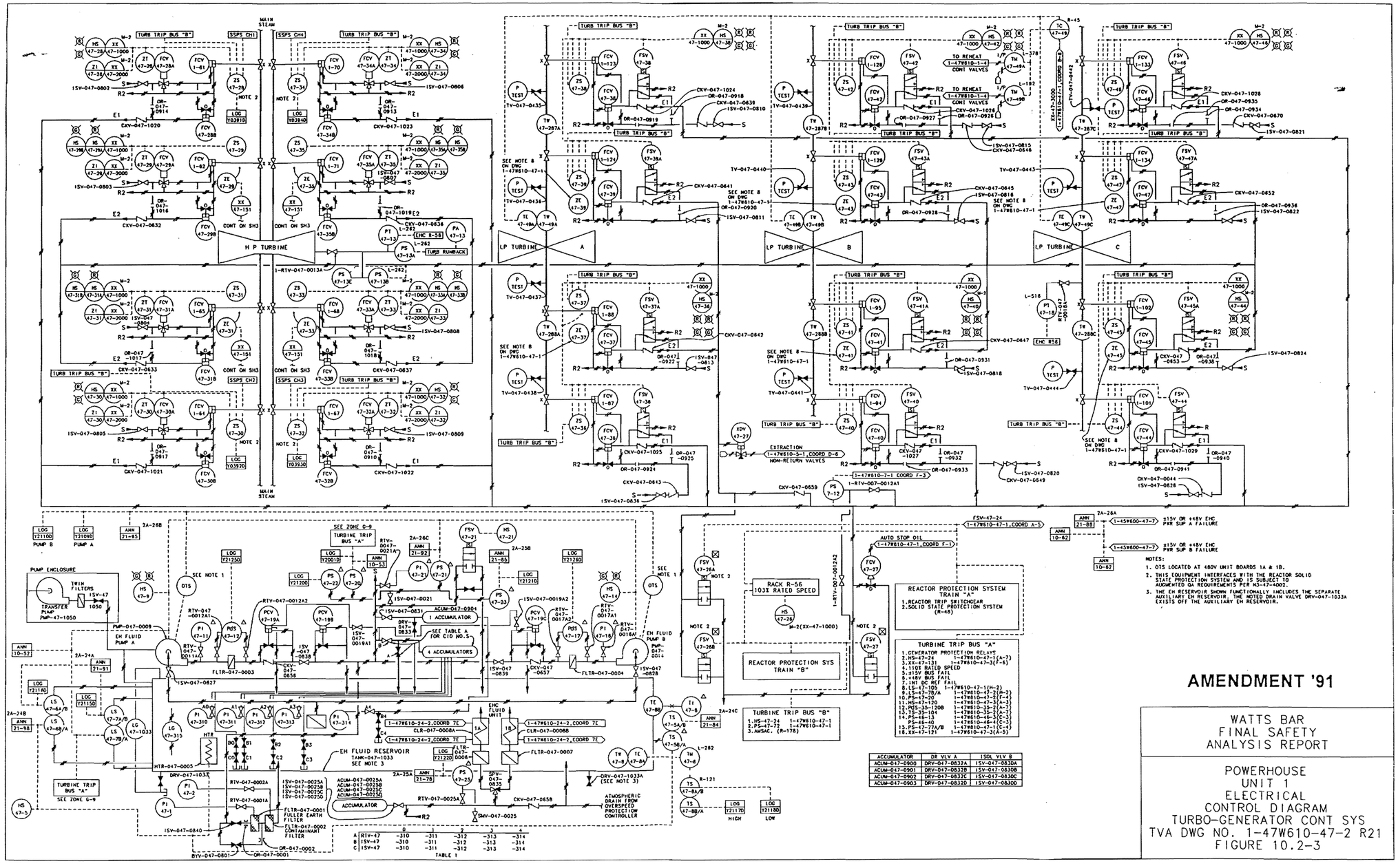

Figure 10.2-3 Powerhouse Unit 1 Electrical Control Diagram Turbo-Generator Cont System

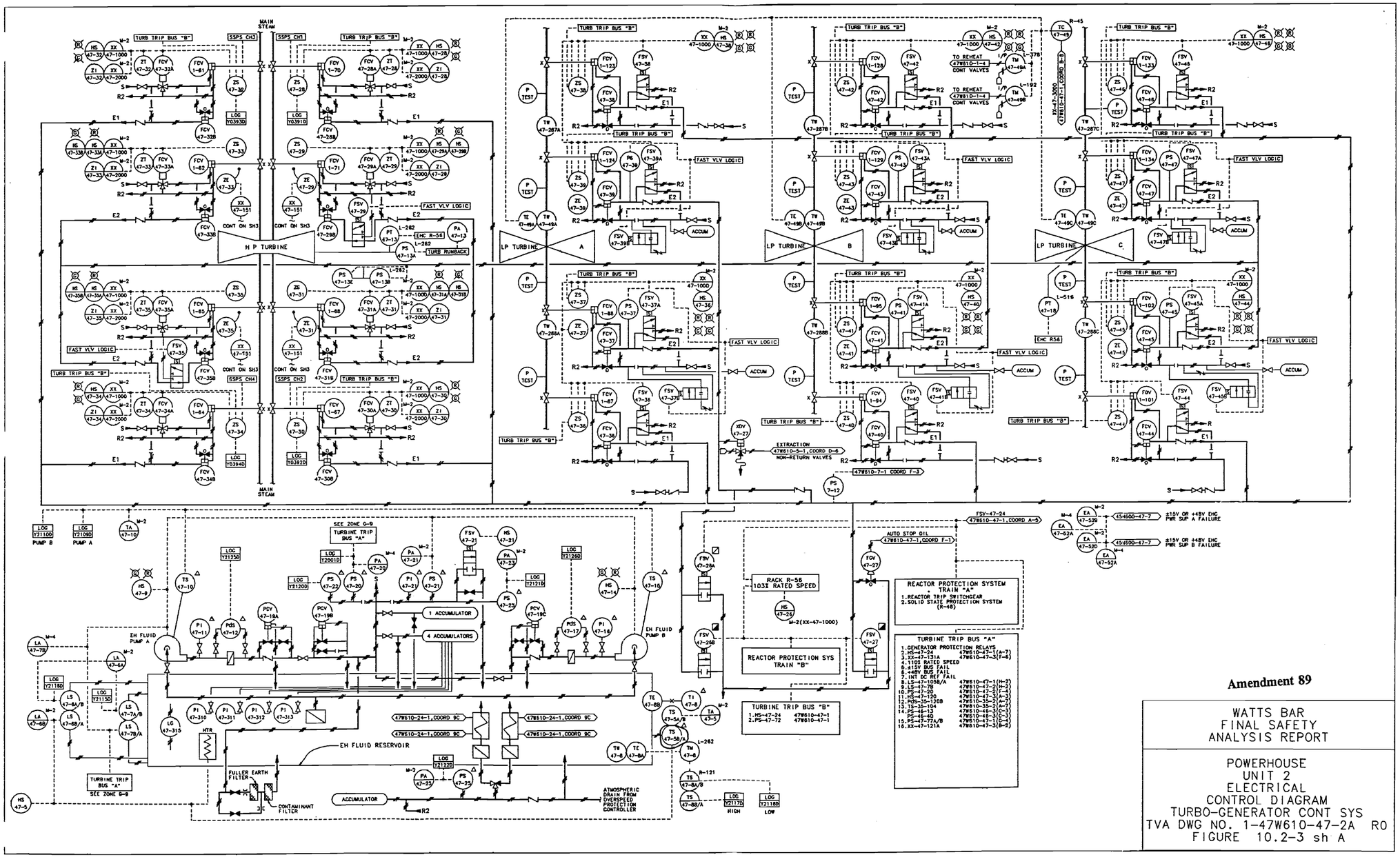

Figure 10.2-3 Powerhouse Unit 2 Electrical Control Diagram Turbo-Generator Cont Sys (Sheet A)

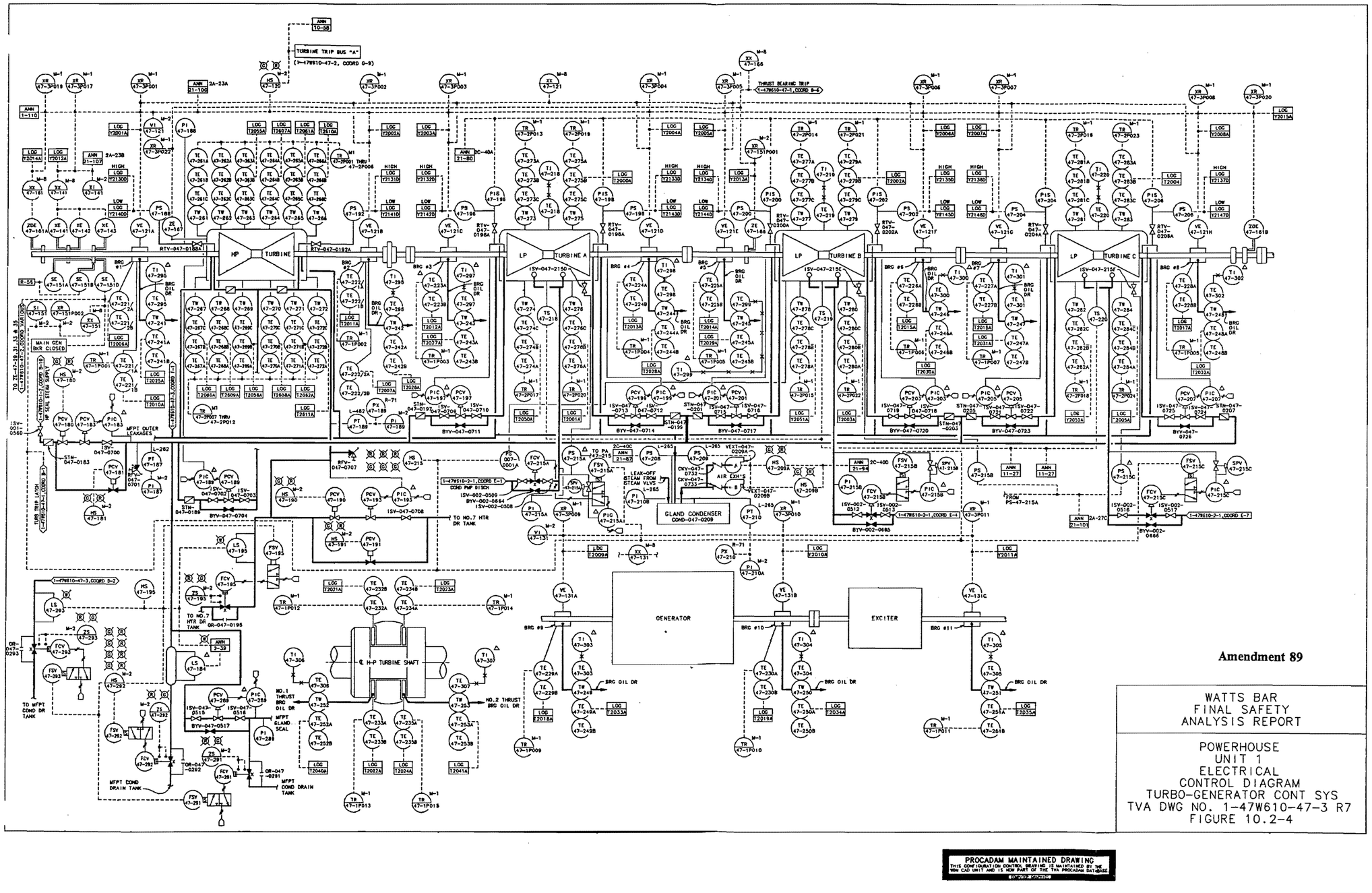

Figure 10.2-4 Powerhouse Unit 1 Electrical Control Diagram Turbo-Generator Cont System

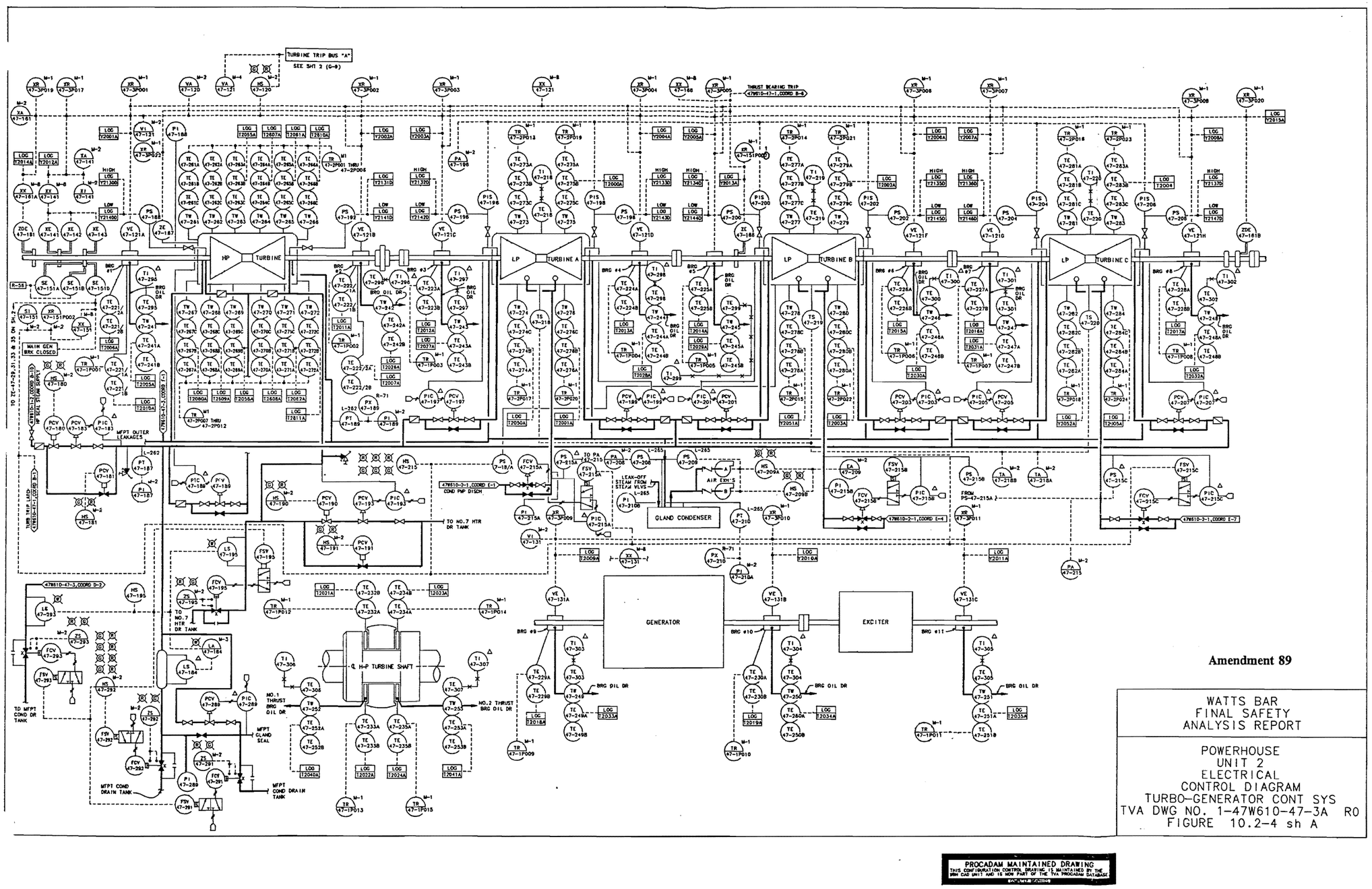

Figure 10.2-4 Powerhouse Unit 2 Electrical Control Diagram Turbo-Generator Cont System (Sheet A)

THIS PAGE INTENTIONALLY BLANK

10.3 MAIN STEAM SUPPLY SYSTEM

10.3.1 Design Bases

The main steam supply system is designed to conduct steam from the steam generator outlets to the high pressure turbine and to the condenser steam dump system. This system also supplies steam to the feedwater pump turbines, an auxiliary feedwater pump turbine, moisture-separator reheaters, and the turbine seals.

The main steam supply system includes self-actuating safety valves to provide emergency pressure relief for the steam generators and atmospheric relief valves to provide the means for plant cooldown by steam discharge to atmosphere if the turbine bypass (condenser steam dump) system is not available.

The main steam supply system is designed to the classifications indicated on flow diagram Figure 10.3-1 and specified in Section 3.2.2.

Pipe failures or malfunctions of any portion of the system have been considered and protection provided. System design assures that a postulated main steam line break coincident with a single active failure will not develop consequences outside the current plant design bases.

10.3.2 System Description

10.3.2.1 System Design

The main steam supply system is shown schematically in Figure 10.3-1. The control and logic diagrams for this system are presented in Figures 10.3-2 through 10.3-7. The steam is conducted from each of four steam generators through the containment and out through the main steam line isolation valves. Each steam generator outlet nozzle contains an internal multiple venturi type flow restrictor which, in the event of a steam line break, will act to limit the maximum flow and the resulting thrust.

The steam generator safety valves and atmospheric relief valves are located upstream of the main steam line isolation valve. There are five safety valves per steam generator. The steam generator safety valves provide emergency pressure relief in the event that steam generation exceeds steam consumption. The safety valve settings are provided in Table 10.1-1.

There is one atmospheric relief valve per steam generator. Each valve has a minimum capacity and a maximum capacity based upon steam generator pressure.

These atmospheric relief valves provide the means for plant cooldown by steam discharge to the atmosphere if the condenser steam dump is not available. The valves will also provide a means of steam generator pressure control if the condenser steam dump is not available, and will thus preclude unnecessary lifting of steam generator safety valves. Pressure setting of these valves is based on a slow and rapid rate of steam generator pressure increase.

The maximum actual capacity at a steam pressure of 1185 psig of any single safety or atmospheric relief valve does not exceed a flow of 970,000 lb/hr. This limits steam release if any one valve is inadvertently stuck open.

Steam supply for the auxiliary feedwater pump turbine is provided by one connection each on two of the main steam lines upstream of the main steam line isolation valves. This arrangement provides both redundancy and dependability of supply.

Each of the two main steam chests includes two turbine stop valves and two turbine control valves. The steam lines are cross-connected upstream of the turbine stop valves. The cross connections provide both an entrance to the condenser steam dump system and a distribution manifold for the turbine stop valves. The turbine is described in Section 10.2 and the turbine bypass system is described in Section 10.4.

10.3.2.2 Material Compatibility, Codes, and Standards

All pressure containing components in the main steam supply system are in accordance with applicable codes or standards. Applicable codes, standards, and design conditions (pressure and temperature) are shown in Table 10.3-1.

The materials for piping and fittings in the TVA Class B Portion of the system are impact tested as required by ASME Section III for Class 2 components.

10.3.3 Design Evaluation

The portion of the main steam supply system designed to TVA Class B requirements is Category I seismically qualified (see Table 3.2-2a). This portion of the system is protected from internal missiles as discussed in Section 3.5.1. Redundant electrical power and air supplies to critical components assure reliable system operation and safe shutdown capability. Redundant steam supply connections are provided for the turbine-driven auxiliary feedwater pump.

The safety valves provide 100% relieving capacity to protect the system from overpressure. The capacity provided by the atmospheric relief valves is over and above the safety valve capacity. The atmospheric relief valves, which have a set pressure slightly lower than the safety valves, prevent unnecessary opening of the safety valves.

Four atmospheric relief valves have been provided per unit (one per steam generator).

Bidirectional steam line isolation valves are installed to protect the plant during the following accident situations:

(1) Break in the steam line piping either inside or outside the containment.

(2) Break in the feedwater piping downstream of the last check valve before the steam generator.

(3) Steam generator tube rupture.

The main steam line isolation valves are 32-inch wye type bidirectional globe, straight through flow, air to open, spring to close. These valves are capable of closing within 6 seconds after receipt of a closure signal on a 'high-high' containment pressure signal, low steamline pressure in any steamline, or high steamline negative pressure rate in any steamline as shown in Figures 7.3-3, Sheet 3, and 10.3-5.

For accident situation No. (1), inside containment, the steam generator associated with the damaged line discharges completely into the Containment. The other steam generators would act to feed steam through the interconnecting header to reverse flow into the damaged line and then release into the Containment. The approximate 6-second closing time for the isolation valves in the other three lines will limit containment pressure rise below design pressure. If any of these three valves fail to close, protection is provided by closure of the valve in the broken line. Hence, redundancy is provided to allow for a single failure of any one isolation valve.

For accident situation No. (1), outside containment, the four main steam isolation valves act similarly to prevent the uncontrolled blowdown of more than one steam generator, even after the failure of any one main steam isolation valve. This prevents any of the system transients from exceeding those described in Chapter 15.

For accident situation No. (2), the isolation valve closure time requirement is not as critical as it is for situation No. 1. Hence, the isolation valve arrangement is satisfactory for requirements resulting from this situation. Valve redundancy to shut off flow in the forward direction is not required.

For accident situation No. (3), valve closure time is not limiting. A fast acting valve is not required nor is valve redundancy. The isolation valve serves to limit the total amount of primary coolant leakage during the shutdown period by isolating the damaged steam generator after pressure is reduced below steam generator shell side design pressure.

See Section 3.11 for Environmental Design of the main steam supply system.

10.3.4 Inspection and Testing Requirements

Performance tests of individual and periodic performance tests of the actuation circuitry and mechanical components assures reliable performance.

Surveillance test requirements are given in Chapter 16.

The main steam supply system complies with ASME Section XI.

Inservice inspection requirements are given in Chapter 3.

Preoperational test requirements are given in Chapter 14.

10.3.5 Water Chemistry

10.3.5.1 Purpose

Water chemistry control in the secondary systems such as the steam generator steam side, feedwater, and condensate for various operating modes and conditions has been established to minimize corrosion and damage to the steam generators and to minimize fouling of steam generator heat transfer surfaces.

10.3.5.2 Feedwater Chemistry Specifications

The plant chemistry program establishes the steam generator steam side and feedwater chemistry specifications for normal power operations. This program is based on the latest EPRI and Westinghouse PWR secondary water chemistry guidelines.

Experience with steam generators using an ammonia and/or ethanolamine all volatile treatment (AVT) method has indicated that corrosion and fouling have been effectively controlled.

10.3.5.3 Operating Modes

(1) Power Operation:

During normal power operation the feedwater and secondary side steam generator chemistry is maintained in accordance with the plant chemistry program. Prompt action is taken to correct any problem indicated by transient excursion outside these guidelines. Feedwater chemistry is maintained within the specified guidelines by providing make-up water of adequate purity and continuously supplying hydrazine, ethanolamine (ETA) and ammonia to the condensate system. Independent hydrazine, ammonia, ETA, ammonium chloride and boric acid systems inject their respective solutions into the condensate system downstream of the condensate demineralizer. These chemical addition systems are shown in Figure 10.3-9.

Steam generator steam side chemistry during power operations is controlled by steam generator blowdown (Section 10.4.8) and the presence of residual ammonia, ETA and hydrazine from the feedwater.

(a) Blowdown. The blowdown system removes contaminants (particulates and dissolved solids) introduced into the steam generators by the feedwater system or fission products that may leak into the steam generators via steam generator tube leak. The quality of water in the steam generators is controlled by maintaining a minimum blowdown rate of 5 gpm per steam generator. At full power the maximum flow rate is approximately 87.5 gpm per steam generator. In the event of primary to secondary leakage or condenser in-leakage, higher blowdown rates may be employed to help keep the steam generator chemistry within

limits. Blowdown may help to control radioactive iodine present in the event of primary to secondary leakage.

(b) Ammonia, ETA, ammonium chloride, boric acid and hydrazine. The ammonia, ETA and ammonium chloride* supplied by the secondary chemical feed system are transported through the main feedwater lines to the steam generator and are carried along with steam through the piping, feedwater heaters, and turbines. Hydrazine is supplied by the secondary chemical feed system and reacts with any oxygen in the feedwater. Consequently, corrosion is inhibited in these components due to the pH control afforded by ammonia. Boric acid* is supplied by the secondary chemical feed system to the condensate system to buffer the solution within the steam generator. These additional systems are shown in Figure 10.3-9.

(Unit 1 only)
*Plant Chemistry controls the supply of ammonium chloride and boric acid to the Replacement Steam Generators (RSGs) in accordance with EPRI and Westinghouse guidelines.

(2) Cold Shutdown/Wet Layup:

Hydrazine and ammonia hydroxide are used during wet layup of the steam generators. The layup chemicals are injected into the steam generators during cold shutdown, sampled using existing steam generator sample line(s), and completely mixed by bubbling nitrogen through the bottom of the steam generator.

(3) Auxiliary System Support:

The hydrazine and ammonia additions are capable of being fed to the auxiliary boiler feedwater pump suction. Thus, corrosion inhibitors are available to the auxiliary boiler system.

10.3.5.4 Effect of Water Chemistry on the Radioactive Iodine Partition Coefficient

As a result of the basicity of the secondary side water, the radioiodine partition coefficients for both the steam generator and the air ejector system are increased (i.e., a greater portion of radioiodine remains in the liquid phase). However, the lack of data on the exact iodine species and concentrations present prevents a quantitative determination of the coefficient increase for these systems. The partition coefficients used for site boundary dose calculations due to secondary side releases are those given in NUREG-0800, Revision 2. For the steam generators, a partition coefficient of 0.01 was used.

10.3.6 Steam and Feedwater System Materials

10.3.6.1 Fracture Toughness

Requirements of the ASME Boiler and Pressure Vessel Code, Section III, Articles NC-2310 and ND-2310 of the summer of 1973 Addenda for fracture toughness for ferritic materials are met in all Class 2 and 3 components. Impact testing is not specified for the auxiliary feedwater piping because the pipe wall thicknesses do not exceed 5/8-inch.

10.3.6.2 Materials Selection and Fabrication

Code class pressure boundary materials in this system are included in Appendix I to ASME Code Section III.

Austenitic stainless steel pressure boundary components may be used in these systems. Therefore, this system conforms to Regulatory Guides 1.31, 1.36, and 1.44.

Topical Report TVA-NQA-PLN89 contains TVA's position for the cleaning and handling of Class 2 and 3 components in accordance with Regulatory Guide 1.37. Cleaning and cleanness of fluid systems and components are in accordance with ANSI N45-2-1-1973, or later.

With the exception of Regulatory Position C-1(b), C-2, and C-4, this system complies with Regulatory Guide 1.50, "Control of Preheat Temperature for Welding of Low-Alloy Steels."

With the exception of Regulatory Position C-1 and C-2.a, this system complies with Regulatory Guide 1.71, "Welder Qualification for Areas of Limited Accessibility."

REFERENCES

None

Table 10.3-1 Main Steam Supply System Applicable Codes, Standards, and Design Condition

Steam Generator Shell
a. Design pressure, 1185 psig
b. Design temperature, 600°F
c. Code, ASME BOILER AND PRESSURE VESSEL Code, Section III, Division 1, Class 1
Main Steam Piping
a. Design pressure, 1185 psig
b. Design temperature, 600°F
c. TVA Class B - Code, ASME Boiler and Pressure Vessel Code, Section III, Class 2
TVA Class H - Code, ANSI B31.1, Code for Pressure Piping
Main Steam Isolation Valves
a. Design pressure, 1185 psig
b. Design temperature, 600°F
c. Code, ASME Boiler and Pressure Vessel Code, Section III, Class 2
Main Steam Safety Valves
a. Design pressure, 1185 psig
b. Design temperature, 600°F
c. Code, ASME Boiler and Pressure Vessel Code, Section III, Class 2
Main Steam Atmospheric Relief Valves
a. Design pressure, 1185 psig
b. Design temperature, 600°F
c. Code, Boiler and Pressure Vessel Code, section III, Class 2

Table 10.3-2 Deleted by Amendment 95

Table 10.3-3 Deleted by Amendment 43

Table 10.3-4 Deleted by Amendment 43

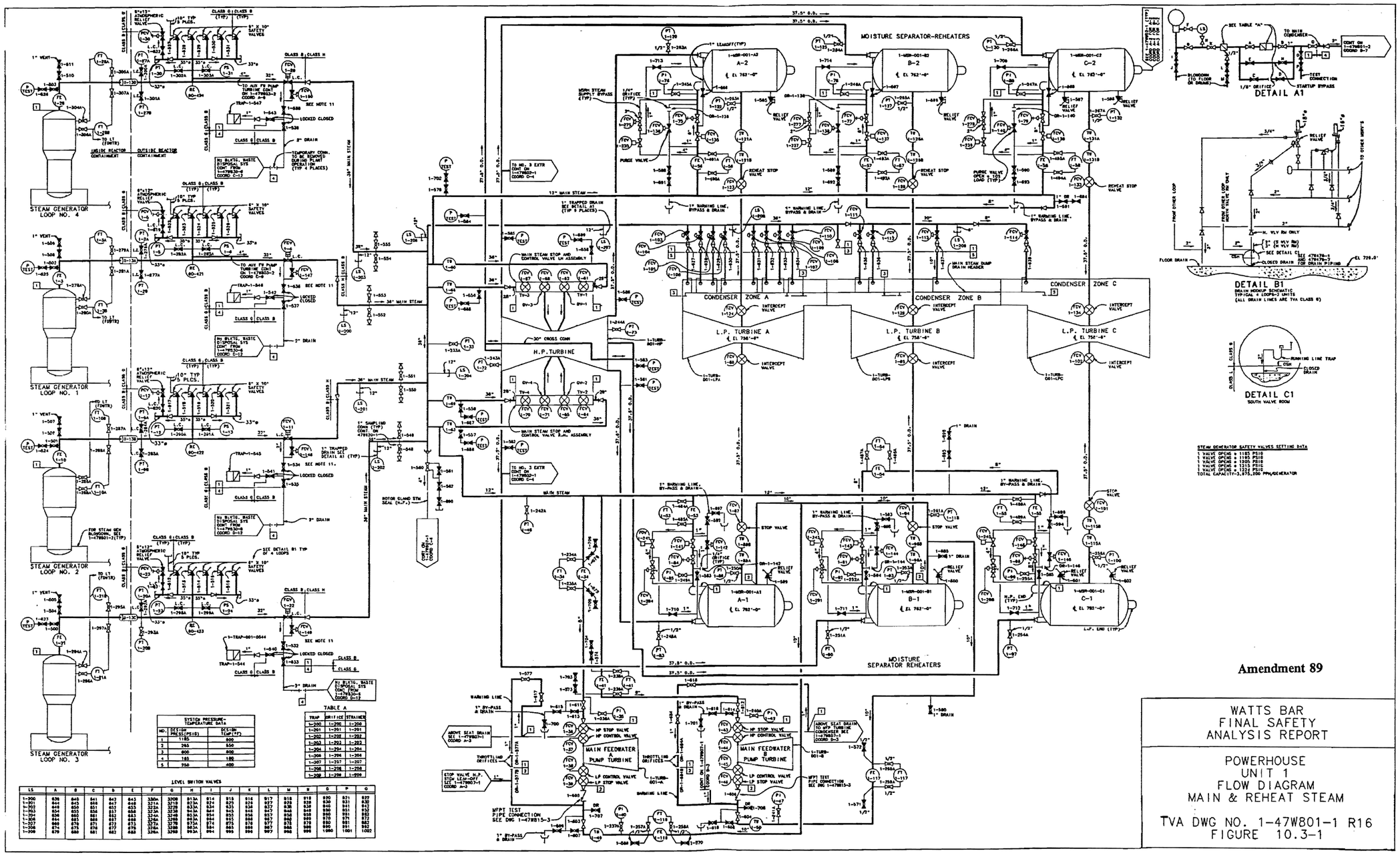

Figure 10.3-1 Powerhouse Unit 1 Flow Diagram - Main and Reheat Steam

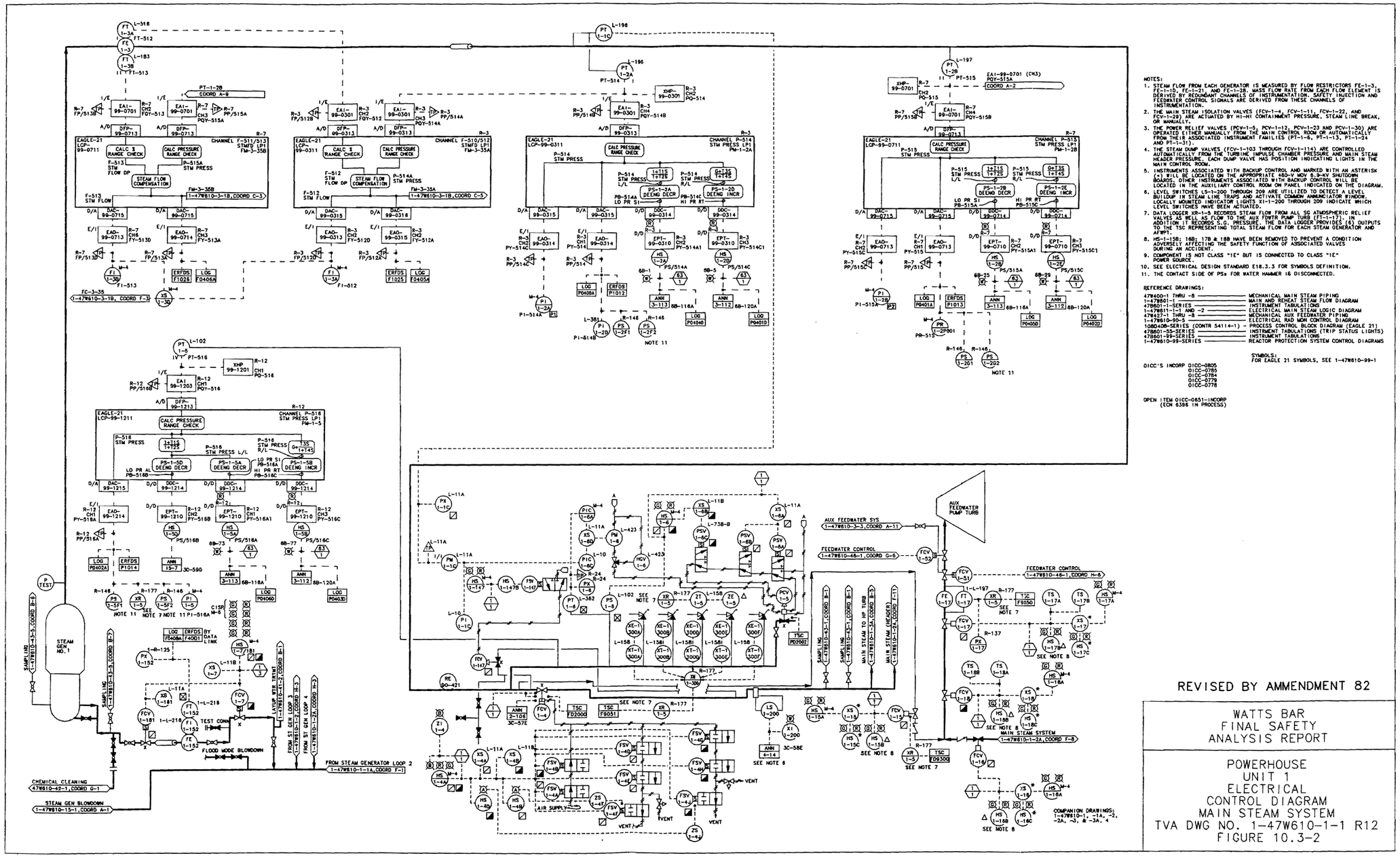

Figure 10.3-2 Powerhouse Unit 1 Electrical Control Diagram - Main Steam System

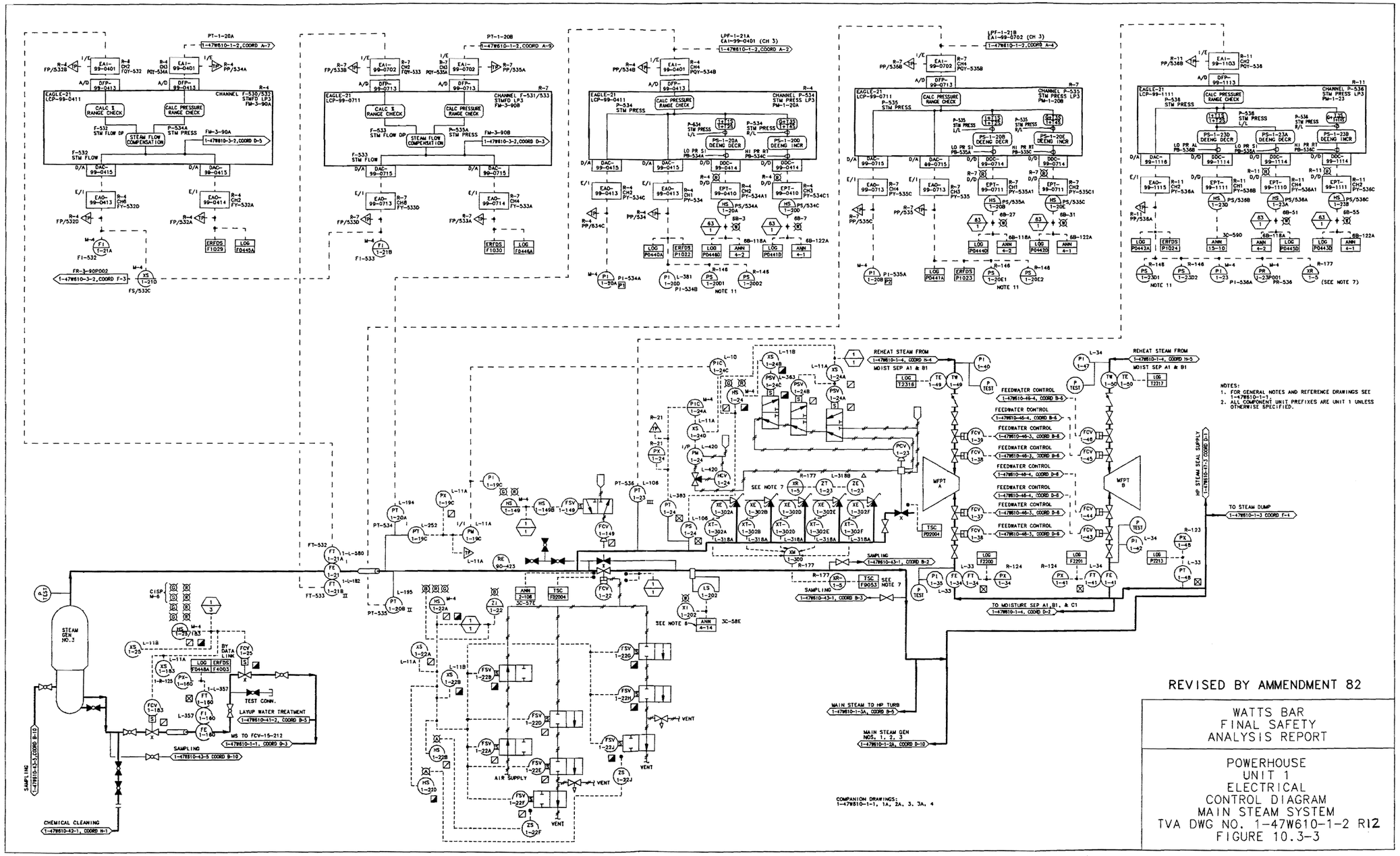

Figure 10.3-3 Powerhouse Unit 1 Electrical Control Diagram - Main Steam System

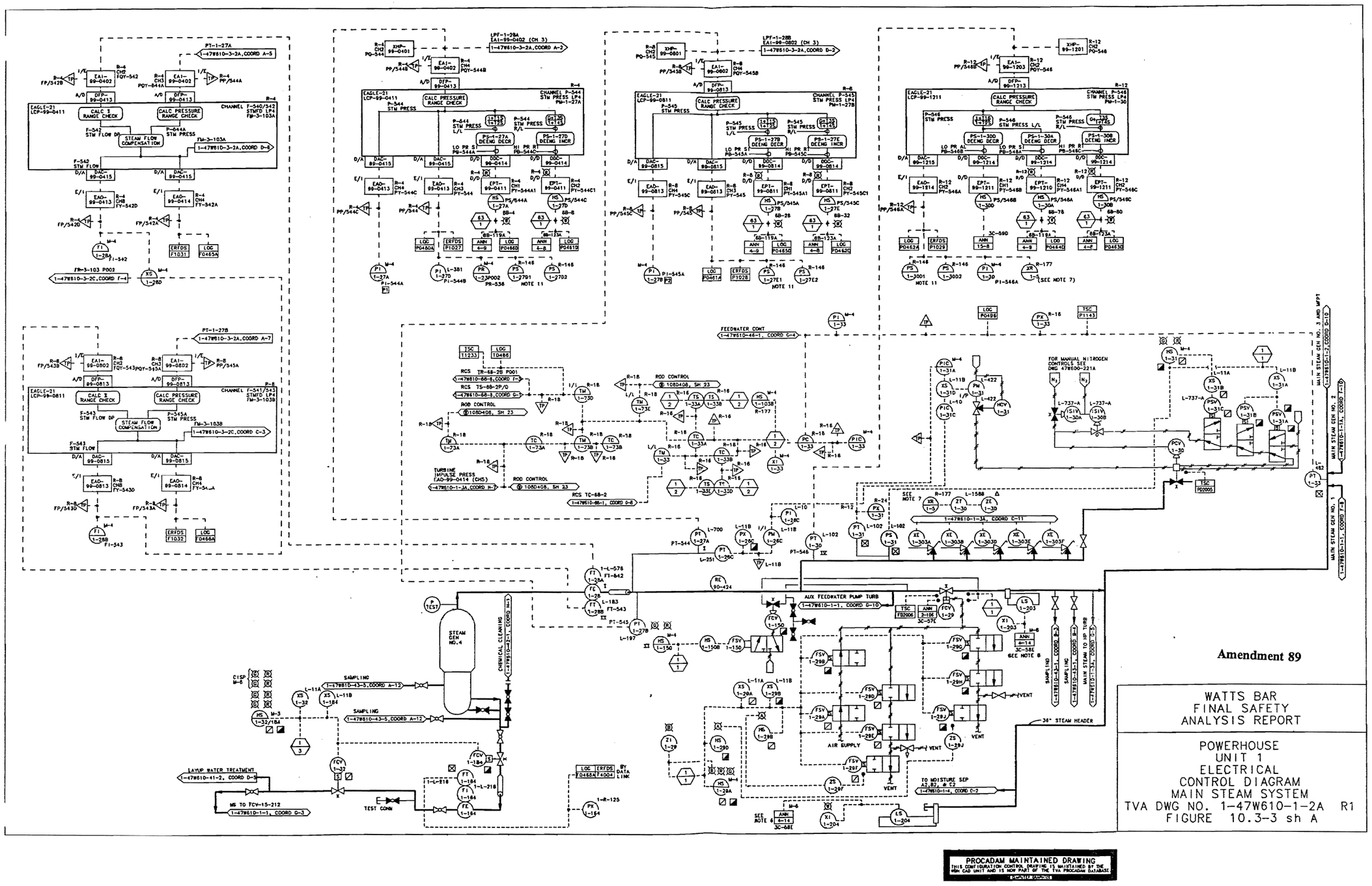

Figure 10.3-3 Sh A Powerhouse Unit 1 Electrical Control Diagram Main Steam System

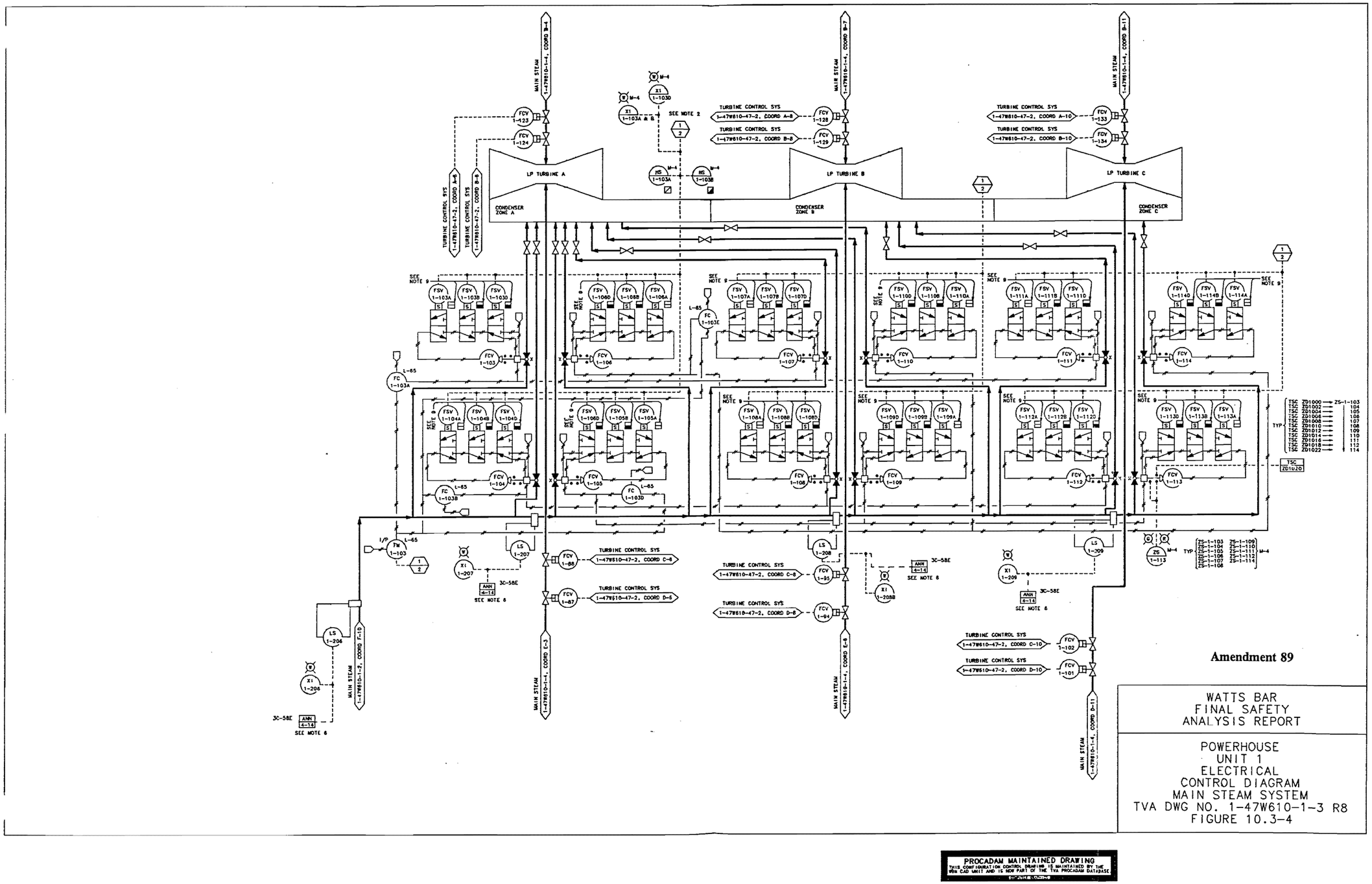

Figure 10.3-4 Powerhouse Unit 1 Electrical Control Diagram Main Steam System

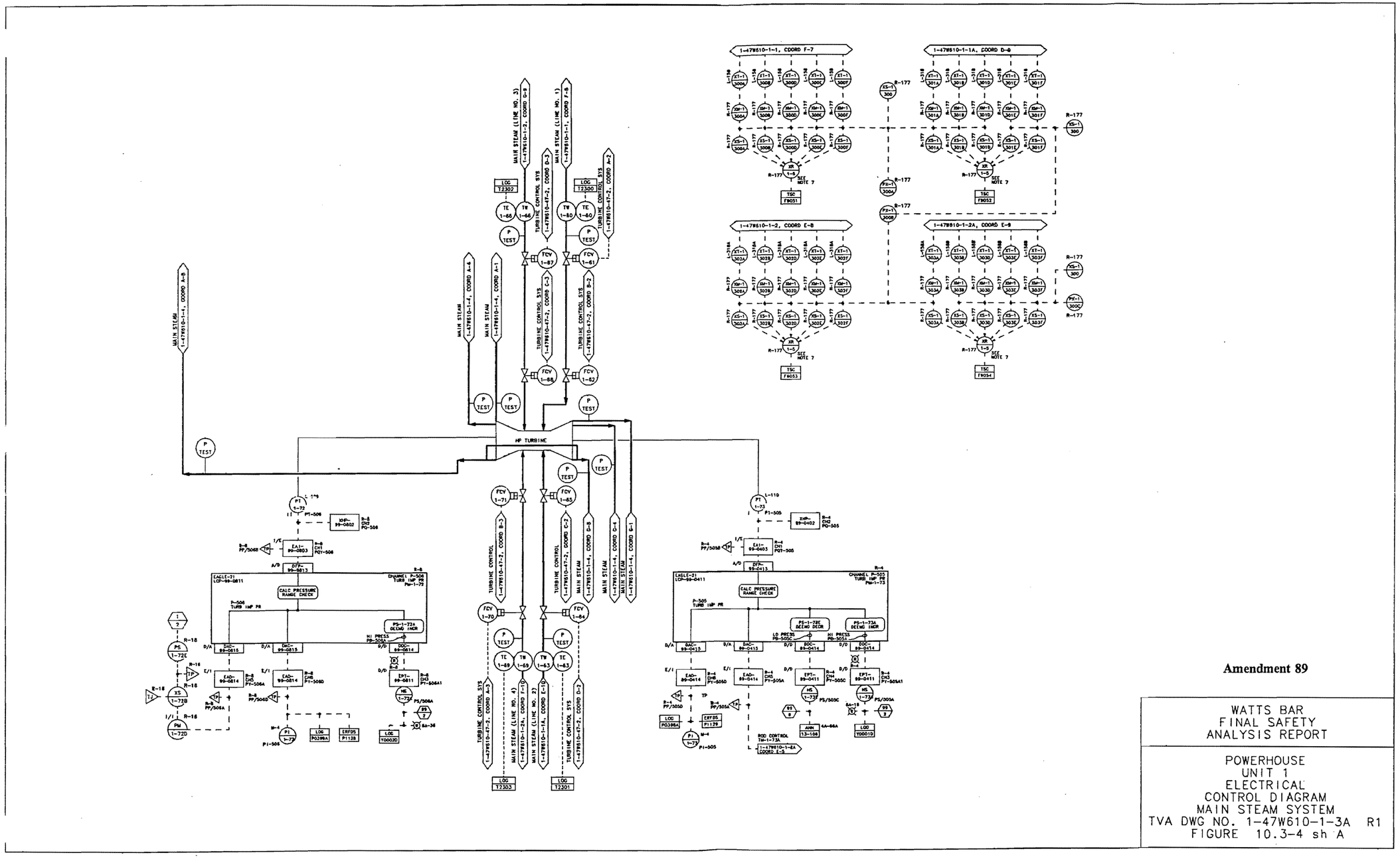

Figure 10.3-4 Sh A Powerhouse Unit 1 Electrical Control Diagram Main Steam System

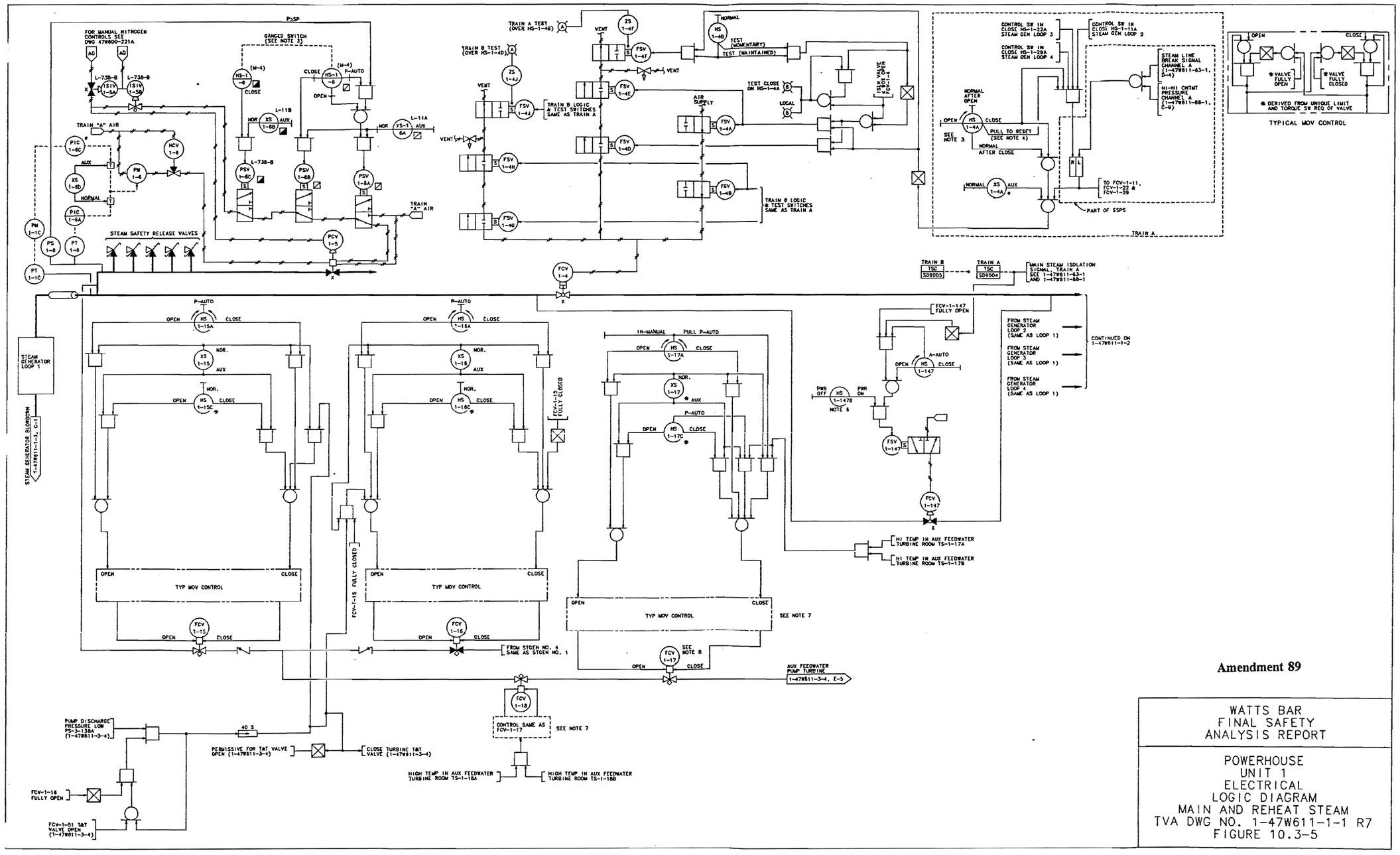

Figure 10.3-5 Powerhouse Unit 1 Electrical Logic Diagram Main and Reheat Steam

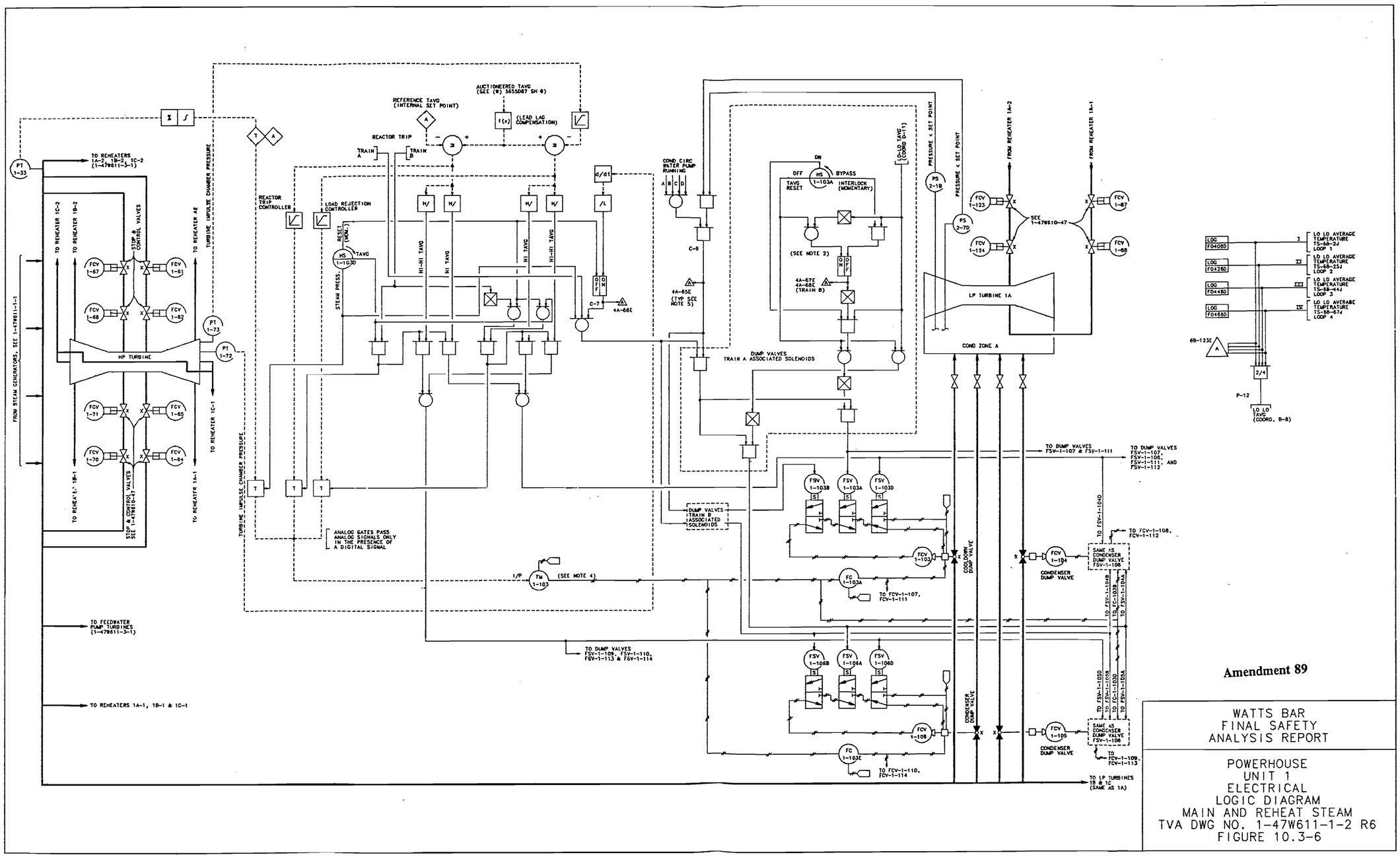

Figure 10.3-6 Powerhouse Unit 1 Electrical Logic Diagram Main and Reheat Steam

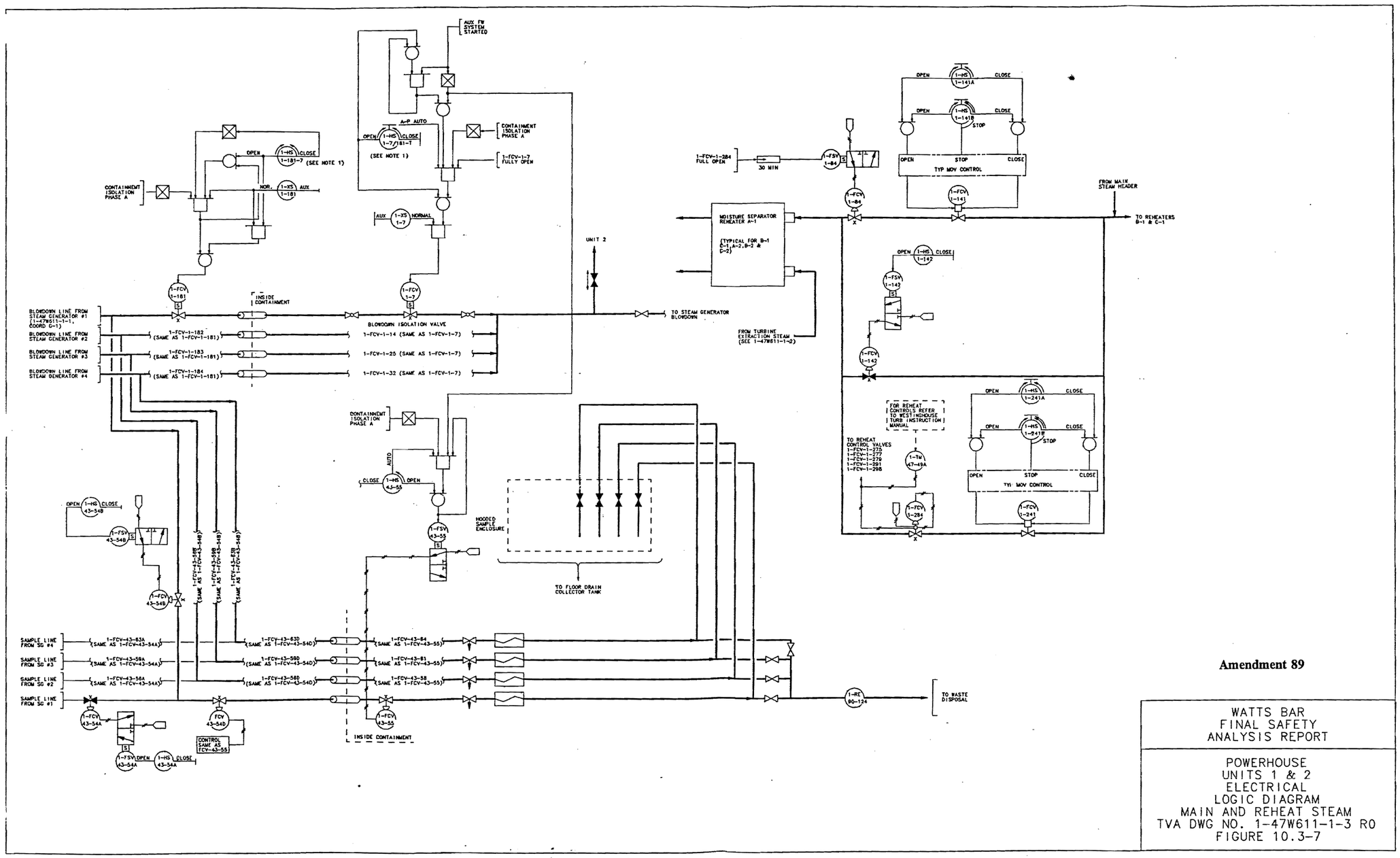

Figure 10.3-7 Powerhouse Units 1& 2 Electrical Logic Diagram Main and Reheat Steam

Figure 10.3-8 Deleted by Amendment 95

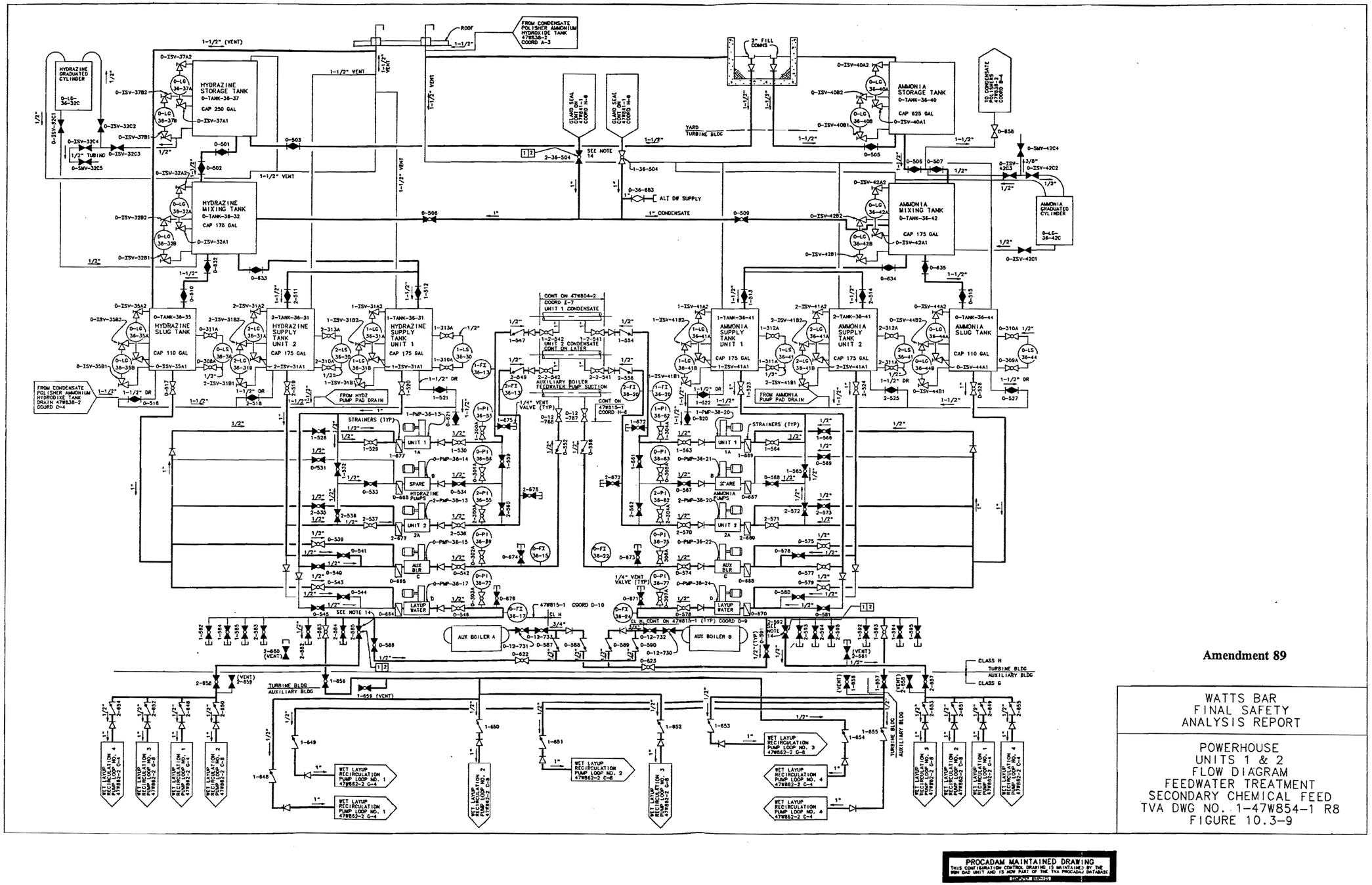

Figure 10.3-9 Powerhouse Units 1 & 2 Flow Diagram Feedwater Treatment Secondary Chemical Feed

THIS PAGE INTENTIONALLY BLANK

10.4 OTHER FEATURES OF STEAM AND POWER CONVERSION SYSTEM

10.4.1 Main Condenser

10.4.1.1 Design Bases

The design basis for the main condenser is to provide a heat removal rate of at least 7.789 x 10^9 Btu/hr per unit for the steam system by condensing the steam from the turbine exhaust. There are three pressure zones with back pressures of 1.92 (Low Pressure, LP), 2.70 (Intermediate Pressure, IP), and 3.75 (High Pressure, HP) inches of mercury, absolute when operating at rated turbine output with 70° F cooling water and 95% clean tubes. A tube cleaning system is provided to keep the condenser operating at peak performance. For purposes of guarantees and calculations, the steam flow is considered to be equally divided between these three zones. During a cold startup, the condenser must also deaerate the initial inventory of water contained within the condensate and feedwater system (some data listed below represents one set of variables and may vary based on ambient temperature and cleanliness and required maintenance tube plugging).

10.4.1.2 System Description

To provide sufficient capability to meet the functional requirements stated in Section 10.4.1.1, the main condenser has the following specifications:

Total surface area, sq. ft.	824,000
Circulating water quantity, gpm	410,000
Circulating water temperature (yearly average), °F	70.5
Circulating water temperature rise, °F	38
Number of shells	1
Number of passes	1

Tubes:

Overall length, ft.	115
Size, inches OD	1
Birmingham Wire Gauge (BWG)	18 and 22
Material	Sea-Cure
Number (18 BWG, top-row)	104 tubes
Number (22 BWG, balance of tubes)	27,306 tubes
Cleanliness, %	95

Duty, 10^9 Btu/hr	7.789
Overall dimensions:	
Length, ft.	137.5
Height, ft	62.5
Width, ft.	27.0
Design pressure:	
Shell, psig	25 and vacuum
Hotwell, psig	30
Waterboxes, psig	72
Hotwell storage (normal), gallons	56,000
Oxygen content of condensate, cc/liter	0.005
Steam Flowrate to condenser, lb/hr	
Maximum guaranteed condition	8,100,000
Valves-wide-open condition	8,500,000
Bypass system:	
Flow, lb/hr	6,057,000
Pressure (at nozzle), psig	250
Enthalpy, Btu/lb	1191.3
Air inleakage, scfm	24

The Main condenser has a rubber belt type expansion joint in the neck and the required impingement baffles to protect the tubes from incoming drains and steam dumps. A condenser seal trough arrangement maintains the rubber belt expansion joints flooded with seal water for minimizing any air inleakage through the expansion joint. The hotwell of the condenser has a water storage capacity equivalent to approximately 3-1/2 minutes of full-load operation. Provisions have been made for mounting three, 1/3 capacity, low pressure extraction feedwater heaters in the neck of each condenser pressure zone.

The condenser is designed to remove dissolved gases from the condensate, limiting oxygen content to 0.005 cc per liter at any load during normal operation. During startup, the initial inventory of water contained within the condensate and feedwater system may be deaerated using steam piped from the auxiliary steam system along with that steam flowing through the turbine exhaust from the shaft sealing system. A recirculation line is run from immediately upstream of the feedwater isolation valves to a perforated pipe running across the condenser hotwell (see Section 10.4.7). Recirculated condensate is sprayed across the condenser hotwell level below the low water level and can be deaerated with auxiliary steam sprayed up through it from steam sparger nozzles located in a header arrangement in the hotwell, if necessary (also below the low water level).

The condenser can accept a bypass steam flow of approximately 40% of maximum guaranteed steam generator flow, without exceeding the turbine high back pressure trip point or exceeding the exhaust hood temperature limits when starting from design circulating water inlet temperature and condenser back pressure conditions. This bypass steam dump to the condenser is in addition to the normal duty expected with a throttle flow of 60% of maximum guaranteed steam generator flow. The flow is distributed to the three pressure zones of the condenser by twelve, 10-inch perforated pipes which are designed to ensure that no high velocity steam jet can impinge on the tubes. Supports for these perforated pipes were designed for the dynamic loading which the bypass flow will impose.

The correct secondary cycle water inventory is maintained by the automatic dumpback-makeup condensate system. The level controller, which is sensitive to the hotwell level, positions the dumpback valve or makeup valve (to or from condensate storage) as required to maintain the hotwell water level within normal limits.

Separate makeup and return lines further provide the capability to clean up or maintain the condensate storage tank water quality during startup by continuously recirculating through this piping and the condensate system demineralizers, if required.

Each condenser is equipped with a sampling system that monitors the cation conductivity. A given increase in cation conductivity at one or more of the nine sampling points after unit startup or during steady-state operation may indicate condenser cooling water inleakage. The nine sampling points were located in such a manner that the operator could determine (1) which tube bundle is leaking, (2) where

the leak is located within the three condenser pressure zones, and (3) whether the leak is in the area of the tube-to-tube sheet joint, and if so, which of the four tube sheets is leaking.

The condenser is divided into two sections; and one section can be isolated during unit operation if is found to be leaking. Each unit has the capability of operating at a reduced power level while one-half of its condenser waterboxes are isolated. By isolating one-half of the condenser waterboxes at a time, repairs and/or plugging of defective tubes can be accomplished within the action times specified for each action level in the Secondary Water Chemistry Program.

The condenser polishing demineralizer system (CPDS) is designed to be capable of producing feedwater in accordance with EPRI and Westinghouse Guidelines for PWR Secondary Water Chemistry. The system has sufficient ion exchange capacity to maintain condensate/feedwater quality within specified limits during periods of condenser inleakage. How long the unit can operate after the condenser inleakage starts is a direct function of the quality of the raw water leaking into the condenser and the required secondary chemistry limits.

The condenser tubes are SEA-CURE (UNS S44660), which is a ferritic stainless steel highly alloyed with chromium and molybdenum. The alloy additions are used to provide a high level of resistance where chloride induced pitting, crevice, and stress corrosion cracking may be encountered. The high modulus of elasticity of SEA-CURE results in tubing highly resistant to steam-induced vibration. The high strength of SEA-CURE also gives a very high fatigue endurance limit as added insurance against vibration induced failure.

Also, the condenser tube cleaning system (AMERTAP) will provide additional protection against pitting attack by keeping sediment and other particulate matter cleaned from the inside tube surfaces.

10.4.1.3 Safety Evaluation

The inventory of radioactive contaminants in the main condensers is a function of the percentage of defective fuel rods, the escape rate coefficients, the steam generator primary-to-secondary leak rate, and considers the steam generator and condenser partitioning coefficents. Primary-to-secondary leakage has the potential for supplying measurable quantities of hydrogen to the condensate system. However, for large primary-to-secondary leakage rates (1.0 gpm), the rate of hydrogen release would be less than 0.01 scfm. This rate is small when compared to the normal two pump condenser evacuation capacity of 24 scfm with vacuum pump operation. Thus, hydrogen entering the condenser is effectively exhausted via the condenser evacuation system and the potential for hydrogen buildup is negligible.

The condenser could become ineffective because of the loss of some or all of its cooling water and/or excessive air inleakage. Either of the above conditions will cause the condenser pressure to increase, and upon reaching the Westinghouse recommended limits the units would be manually or automatically tripped, in accordance with operations instructions.

The residual heat during the above conditions is removed by dumping steam to the condenser through the turbine bypass valves when the condenser pressure is below approximately 6.5-inches Hg absolute and at least one circulating water pump is operating. At a condenser pressure of 6.5-inches Hg absolute or higher or when no circulating water pumps are operating, the turbine bypass valve will automatically trip closed if open (and be prevented from opening if closed). The residual heat will then be removed by dumping steam to the atmosphere through the power operated atmospheric relief valves and/or the ASME code safety valves.

There is no interface between the loss of main condenser vacuum and the MSIVs because the turbine bypass valves provide isolation of the steam source.

The Turbine Building does not contain any Engineered Safety Features (ESF); hence, no ESF would be affected by failure of a condenser shell, or hotwell, or by loss of condenser vacuum. The condenser is in its own pit, with a free volume much greater than the hotwell/condensate water volume. The effects of the failure of a condenser waterbox or circulating water piping are discussed in Section 10.4.5.

10.4.1.4 Inspection and Testing

The condenser is tested for leaks by completely filling the shell with condensate. The waterboxes are leak tested by filling them with raw water. Manways provide access to water boxes, tube sheets, lower steam inlet section, shell, and hotwell for purposes of inspection, repair or tube plugging.

10.4.1.5 Instrumentation

Sufficient level controllers, level switches, pressure switches, temperature switches, etc., are provided to permit personnel to conveniently and safely operate the condenser system. The condenser instrumentation is included in the control diagrams for the condensate system, Figures 10.4-9 through 10.4-11A.

10.4.2 Main Condenser Evacuation System

10.4.2.1 Design Bases

The design basis for the main condenser evacuation system is the capability to create and maintain condenser back pressure at 1.0-inch mercury, absolute by removing noncondensable gas and air inleakage. The design evacuation rate is 24 scfm. The condenser evacuation system piping is designed in accordance with ANSI B31.1 1973 Edition through Summer 1973 Addenda.

10.4.2.2 System Description

The main condenser evacuation system is shown in Figures 10.4-7, 10.4-9, 10.4-10, and 10.4-12. These figures show the flow, control, and logic diagrams, respectively, for the condensate system. To provide sufficient capability to meet the functional requirements as stated in Section 10.4.2.1, the main condenser evacuation system

has been designed with the following specifications which meet the requirements of the Heat Exchange Institute for steam surface condensers:

Type of evacuating equipment	Mechanical vacuum pump
Number of vacuum pumps, per unit	3
Air capacity at suction pressure of 1-inch Hg absolute, per pump at normal operation,scfm	15
Air capacity at suction pressure of 15-inch Hg absolute, per pump at startup, scfm	800

The vacuum pumps are two stage, liquid ring type pumps. Two pumps, operating in parallel, are adequate for the removal of the maximum expected air inleakage of 24 scfm. The third vacuum pump is arranged to start automatically on increasing condenser back pressure.

10.4.2.3 Safety Evaluation

One of the three vacuum pumps is a backup unit. This unit automatically starts when the condenser back pressure increases to approximately 4.6-inches Hg absolute. Should the back pressure continue to increase (because of inadequate air removal capability), the turbine would trip and, consequently, cause a reactor trip. The turbine trip would automatically occur at approximately 6 to 12 inches Hg absolute.

Details of the radiological evaluation of the condenser evacuation system are contained in Chapter 11.

10.4.2.4 Inspection and Testing

A flowmeter is provided with each vacuum pump for condenser in leakage measurement. Periodic readings of these flowmeters will indicate whether or not the air inleakage to the condenser is within acceptable limits. These readings will also indicate the effectiveness of the operating vacuum pumps.

Preoperational test requirements are given in Chapter 14.

10.4.2.5 Instrumentation

Pressure switches are provided to automatically start the standby vacuum pump.

Unit 2 Only

The vacuum pump exhaust to atmosphere has three types of radiation monitors. The normal range monitor, sampling vacuum pump exhausts, gives early indication of primary-to-secondary steam tube leakage and annunciates in the Main Control Room

when radiation level reaches limits specified in the WBN Offsite Dose Calculation Manual (ODCM). Two accident range monitors are employed to monitor this flow path subsequent to a design bases accident. Each is an area radiation monitor mounted directly on the exterior of the Condenser Vacuum Exhaust pipe. The mid-range, mounted area radiation monitor includes a Gieger-Mueller tube detector. The high range, mounted area radiation monitor includes a gas-filled gamma ionization chamber detector. Additional information regarding these three radiation monitors is provided in Section 11.4.2.2.2.

The instrumentation for this system is shown on the electrical control diagram for the condensate system, Figure 10.4-10.

10.4.3 Turbine Gland Sealing System

10.4.3.1 Design Bases

The turbine gland sealing system is designed to seal the main turbine shafts and valve stems and the main feed pump turbine shafts using steam from upstream of the turbine stop valves. The sealing can be accomplished automatically with steam supply of pressure 185 psia or more, and manually with steam supply pressure between 108 psia and 185 psia. Steam from the auxiliary boiler is supplied to the seals during startup. The turbine gland sealing system is designed in accordance with ANSI B31.1 1973 Edition through Summer 1973 Addenda.

10.4.3.2 System Description

The turbine gland sealing system is shown on Figure 10.4-1.

The purpose of the gland steam sealing system is to prevent leakage of air into the turbine casing, and conversely, prevent the leakage of steam into the turbine room when the turbine casing is pressurized.

The system utilizes metallic labyrinth type shaft seals. Each seal is equipped with two annular chambers which are located among the packing rings. The inner chamber nearest the turbine casing is maintained at a pressure of approximately 16 psia by the admission of sealing steam or the controlled leak-off of higher pressure steam. The outer chamber is maintained at a slight vacuum (approximately 3- to 5-inches water) by the gland steam exhauster system. The vacuum causes the sealing steam to leak outward and mix with any inward leaking air. This mixture flows to the gland steam condenser where most of the steam is condensed and returned to the secondary cycle. The noncondensibles are forced by the exhauster through piping to the outside of the Turbine Building.

10.4.3.3 Safety Evaluation

Since this is a PWR, radioactive steam in the steam seal system is of very small consequence. The exhauster discharge is piped outside of the building to prevent the possible accumulation of radioactive particles in a stagnant building area.

In the event one exhauster is lost, the ineffective exhauster is isolated and the spare one started. Should both exhausters fail, seal steam will leak into the turbine room. If the steam seal supply fails, excess air leakage will probably trip the turbine because of high condenser back pressure. A number of safety valves and rupture diaphragms are installed on this system to protect the various components against high pressure. The radiological effects of this system are negligible during normal operation. A radiological evaluation of the loss of the system is presented in Chapter 11.

10.4.3.4 Inspection and Testing

This equipment will be tested by the vendor in accordance with the various applicable code requirements.

10.4.3.5 Instrumentation

Sufficient instrumentation has been provided to satisfy all system functional requirements and to permit safe, convenient operation by plant personnel. System performance is constantly monitored by measuring gland steam exhauster vacuum and supply header pressure.

10.4.4 Turbine Bypass System

10.4.4.1 Design Bases

The turbine bypass system is designed to reduce the magnitude of nuclear system transients following large turbine load reductions by dumping throttle steam directly to the main condenser, thereby creating an artificial load on the reactor.

The turbine bypass system has the following functional requirements:

(1) Permit a direct bypass flow to the main condenser of 40% of rated turbine flow, thereby allowing a turbine step load reduction of 50% without a resultant reactor trip or actuating the steam generator safety valves (MSSVs).

(2) Permit turbine trip (accompanied by reactor trip) from full load without opening steam generator safety valves.

(3) Provide plant flexibility during operation by allowing turbine load changes in excess of the base NSSS design, without reactor trip.

(4) Provide controlled cooldown of the NSSS.

(5) Assist in achieving stable startup and cooldown of the plant.

The turbine bypass system piping is designed in accordance with ANSI B31.1 1973 Edition through Summer 1973 Addenda.

10.4.4.2 System Description

The turbine bypass system and its instrumentation and controls are shown on Figures 10.3-1 through 10.3-7, which are the flow, control and logic diagrams for the main and reheat steam.

The capability for meeting the functional requirements of Section 10.4.4.1 has been provided by designing the equipment to the following specifications:

Number of valves - 12

Flow per valve - 532,170 lb/hr

Main steam pressure at valve inlet (for above flow) - 900 psig

Maximum flow per valve at 1185 psig inlet pressure - 970,000 lb/hr

Time to open (full stroke) - 3 seconds

Full stroke modulation - 20 seconds

Failure position - Closed

The steam leads from the four steam generators are cross-connected immediately upstream of the turbine stop valves. Piping is run from this header to the 12 turbine bypass valves and then to the condenser. Eight valves discharge into the low pressure zone of the condenser, three valves discharge into the intermediate pressure zone, and one valve discharges into the high pressure zone. This arrangement helps to prevent exceeding of the differential backpressure/temperature limits between low pressure turbines during steam dump operation.

The turbine bypass valves are operated in one of the two control modes: (1) T_{AVG} Mode, (2) steam pressure mode. The T_{AVG} Mode is normally used during plant operation. The Steam Pressure Mode is normally used during plant startup and shutdown. Refer to Section 7.7.1.8 for detailed description of the turbine bypass valve control.

The bypass valves are built in accordance with ASME Section III, Class 2, which invokes ANSI Standard B16.5. All piping in the steam bypass system is in accordance with ANSI Standard B31.1.

10.4.4.3 Safety Evaluation

The turbine bypass valves are blocked from operating if any of the following abnormal process conditions exists: 1) condenser is unavailable (hight absolute pressure), 2) no condenser circulating water pumps operating, or 3) low-low reactor coolant average temperature. If the above process conditions are normal, the following conditons will arm the control system and allow turbine bypass valve operation: 1) reactor trip signal, 2) turbine load rate change greater than setpoint, or 3) control

mode hand switch placed in the Steam Pressure mode. A manual hand switch is used to block the low-low reactor coolant average temperature signal (P-12) to allow operation of the three turbine bypass “cooldown” valves.

An alternate method of RCS cooldown, below 350°F (i.e., delay RHR cut-in), is provided via the turbine bypass valves. The alternate method provides for disabling the P-12 Interlock during cooldown after entering Mode 4. The temporary disablement can be performed procedurally with no permanent hardware modifications to the unit. Permanent control board indication of the bypassed condition is not provided nor is the bypass automatically removed when the permissive conditions are no longer met. The use of all twelve turbine bypass valves is optional for the Operator. The turbine bypass valves are controlled using the Steam Pressure Controller before and after the protective interlock is disabled. The interlock disablement procedure for utilization of all twelve valves is performed only after shutdown (and subsequent cooldown) has been initiated and therefore, does not present a reactor trip hazard. An analysis has been performed to assess the cooldown potential following failure of the steam dump controller after placing turbine bypass valves in service. It was determined that the three turbine bypass “cooldown” valves spuriously opening at the protective interlock setpoint of 550°F can produce a cooldown rate that far exceeds that of all twelve turbine bypass valves opening at 350°F (temperature below which additional valve use is permitted).

Loss of the control air supply to the diaphragms of the bypass valves will prevent the valves from opening, or, if the valves are open, will trip them closed. In the event of loss of the turbine bypass valves, the steam generators will still be protected during all transients by the ASME code safety valves. Steam generator cooldown capability will be available through use of the power operated relief valves (atmospheric dump).

Inadvertent or accidental opening of any one bypass valve during power operation will not subject the reactor coolant system to an uncontrolled cooldown. Cooldown consequences may be minimized by operation of the rod control system and/or the overpower ΔT runback function.

Failure of the turbine bypass system can result in discharge of steam to the atmosphere through the steam generator safety valves. If tube leaks are present prior to the incident, some radioactivity accumulated in the steam generator shell side water would be discharged through the safety valves. This radioactivity will be well within limits established by 10 CFR 100. Failure of the turbine bypass system will not affect, directly or indirectly, any engineered safety feature system.

10.4.4.4 Inspection and Testing

This equipment will be tested in accordance with the various code requirements. Periodic tests will be performed to assure that the system remains capable of its functional requirements. Inservice inspection in accordance with ASME Section XI is not required.

Preoperational test requirements are given in Chapter 14.

10.4.4.5 Instrumentation

Sufficient instrumentation has been provided to permit this system to:

(1) Satisfy all its functional requirements,

(2) Protect the reactor (from low-low T-average),

(3) Protect the turbine (from high condenser pressure).

The instrumentation for this system is shown on Figures 10.3-5 and 10.3-7, the logic diagrams for the main and reheat steam.

10.4.5 Condenser Circulating Water System

This section covers the design and operating aspects of the condenser circulating water (CCW) system, including the circulating water pumps, the circulating water conduits, the main condenser, the hyperbolic natural draft cooling towers, the yard holding pond, the desilting basin and the supplemental CCW (SCCW). The primary function of the CCW system is to provide cooling water to the condensers for the main steam turbines. The system provides an efficient means of dissipating waste heat from the power generation cycle into the ambient surroundings while meeting all applicable chemical and thermal effluent criteria. Because of the capacity and convenience, the blowdown from the CCW system is used to dilute and dispense the low-level radioactive liquid wastes from the radwaste, steam generator blowdown and condensate polishing demineralizer systems (CPDS).

10.4.5.1 Design Basis

(1) The CCW system provides a design flow of approximately 410,000 gpm to the main condenser. The main condenser flows result in a temperature rise of 38°F for the circulation water through the condensers in the process of receiving 7.8×10^9 Btu/hr of waste heat per unit. This water flow is a sufficient quantity to condense the steam at an optimum main condenser back pressure and to dissipate all rejected heat.

(2) The CCW system provides a means of meeting all applicable water thermal criteria by dissipating the waste heat directly to the atmosphere by means of a single hyperbolic natural draft cooling tower for each unit and to the river via SCCW.

(3) The CCW system provides for dilution and dispersion of low-level radioactive liquid wastes. The upper limits on the activity levels are discussed in Section 11.2.

10.4.5.2 System Description

The flow diagram for the CCW system is shown in Figures 10.4-2 and 10.4-3. The system control and logic diagrams are shown in Figures 10.4-4 through 10.4-6. A single loop CCW system is employed for each of the two units. The system is designed

so that the cooling tower, conduits, circulating water pumps, and main condenser constitute a cooling loop. The CCW pumping station is an independent structure located in the yard between the Turbine Building and the cooling towers. Four pumps for each unit are provided in this pumping station to operate in parallel and circulate water from the cooling tower cold water basin, through the condenser, and back to the heat exchanger section of the cooling tower.

The eight condenser circulating water pumps are of the electric-motor-driven, vertical, dry pit, single-stage, double-suction, centrifugal, volute type. Each pump has a capacity of 102,500 gpm at a design head of 103 feet such that each group of four pumps supplies the full flow requirements of one generating unit. System required head is 98 feet. Adequate positive pressure is maintained on the pump suction by the available static head between the normal water level in the cooling tower basin, elevation 730.0, and the centerline elevation of the pump suction, elevation 715.25. Normal water level can be maintained by operation of the raw cooling water (RCW) bypass strainer, and low level is alarmed in the main control room.

The main condenser is of the single shell, triple pressure type with a divided water box, as described in Section 10.4.1. An Amertap condenser tube cleaning system is provided for automatic continuous cleaning of the condenser tubes during normal operation.

Tandem, metal expansion joints are provided on both inlets and both outlets of the main condenser to accommodate the thermal expansion of the condenser shell and tubes resulting from the differing temperatures encountered during various modes of operation. A motor-operated butterfly valve is located in each inlet and outlet line to the condenser. These valves provide for isolation of either half of the condenser and the related expansion joint or tube cleaning system.

Each of the two hyperbolic natural draft, counterflow cooling towers is designed to reject the full-load waste heat of a single unit main condenser to the atmosphere by evaporation as the CCW passes through the film-type heat exchange section. The cooling towers are designed to cool the circulating water to 73.5°F based on a mean annual design wet bulb temperature of 52.3°F and a mean annual design dry bulb temperature of 57.0°F.

Cooling tower blowdown (CTB) water is extracted from the discharge flume of each cooling tower and can be returned directly to the reservoir through a system of multiport diffusers. The blowdown rate is determined by the height of the water level in the flume over the crest of a blowdown weir; therefore, it is directly related to the control of the makeup flow. Blowdown can be continuously discharged to the reservoir during normal operation of the circulating water system as long as the river flow rate is not below 3500 cfs. The river flow past the plant is determined by the measurement of flow release through the hydro units of Watts Bar Dam. The flow rate through a single hydro unit at minimum operating lake level is 3500 cfs, which is the minimum flow that can be accurately determined. Whenever river flow drops below 3500 cfs, it becomes necessary to withhold blowdown to avoid violation of thermal or chemical discharge standards. Under this situation the blowdown will continue to be discharged

from the cooling towers; however, the diffusers will be isolated and the blowdown will be diverted to the yard holding pond. This pond will serve as a storage area for the blowdown until such time as the river flow again becomes sufficient to accept the discharge. The duration of low river flow generally does not exceed 12 hours during which time less than half the 190 acre-feet volume of the pond would be required for storage of blowdown. Upon resumption of sufficient river flow, the blowdown from the two towers and the water stored in the holding pond will be discharged into the river through the diffuser. The diffuser system has been designed to provide the proper dilution of the discharge into the river for the various combinations of two unit operation and draw down of the holding pond, while remaining within the limits of all applicable effluent standards.

Whenever blowdown water is being discharged to the river, the blowdown serves as the source of dilution flow for the discharge from the plant radioactive waste disposal system and for radioactively contaminated regenerative waste (if it is within the discharge specification described in Section 10.4.6). Refer to Section 11.2 for a detailed description of the liquid waste management systems.

The cooling tower blowdown system will also serve as an alternate source for disposal of blowdown from the steam generators as described in Section 10.4.8.

Discharge of low level radioactive waste into the cooling tower blowdown to the reservoir or yard holding pond is discontinued when either the blowdown flow rate is not sufficient for proper dilution or upon high radiation signal.

Evaporation, drift, and blowdown losses from the system are replaced by the ERCW discharge, and raw cooling water (RCW) discharge, as required. To enable the raw cooling water system to be utilized to the fullest extent, a bypass line with modulating valve is provided from the RCW supply to RCW discharge headers. This line will permit that portion of RCW system flow in excess of the RCW component requirements to bypass the Turbine Building and serve as additional makeup to the CCW system. Refer to Sections 9.2.1.2, and 9.2.8.2, for additional discussion of the cooling tower makeup.

Chemical additives including biocide injection and corrosion inhibitors are added as required for biological and corrosion control. Chemicals may also periodically be injected into the CCW system as necessary to prevent organic fouling. When chemicals are introduced into the CCW system, the chemicals may be injected into the CCW conduits on the suction side of the CCW pumps, the hot water return to the cooling tower, or the cooling tower basin. Provisions are made to comply with the requirements of the National Pollutant Discharge Elimination System (NPDES) permit.

Water discharged into the CCW system, including initial filling and makeup, comes from the river via the ERCW, RCW, and SCCW systems. Provisions made in the ERCW and RCW to control the introduction of Asiatic clams will also prevent their introduction into the CCW loop. Refer to Sections 9.2.1.6 and 9.2.8.2 for a description of these provisions.

10.4.5.3 Safety Evaluation

The Cooling Towers, Condenser Cooling Water Pumping Station, pumps and motors, associated conduits and the SCCW are not required to be designed to Seismic Category I, tornadic wind, or maximum flood requirements, since they are not required for safe shutdown of plant. The Cooling Towers are located such that the towers' structural failure due to a seismic event, a tornado, or any other natural phenomenon could not damage any safety-related structure, system, or component.

The operator will be alerted via MCR annunciation to a rising water level in the Turbine Building condenser pit area (due to one or more flood level instruments located in the atmospheric condensate drain tank pump area of each unit mounted at Elevation 673.5) due to a rupture of the CCW piping inside the Turbine Building. The power supply to the CCW pumps and valves are provided with diverse remote trip and isolation capabilities to allow the operator to trip the pumps upon rising water in the Turbine Building.

All penetrations and passageways from the Turbine or Service Buildings to the Auxiliary or Control Buildings are sealed for flooding up to a minimum Elevation 711.0 in the Service and Turbine Buildings. This requirement applies to all doorways, electrical penetrations, and mechanical piping penetrations. The 711.0 foot elevation is the maximum expected flood level resulting from a condenser circulating water system rupture in the Turbine Building (See Section 3.8.4.4.1). Also, there is no equipment essential to plant safety located either in the Turbine or Service Buildings. Consequently, water from a CCW system rupture cannot endanger any safety-related equipment, including essential electrical systems. Figure 1.2-5 shows the personnel passageways below elevation 729.0 that connect the Turbine and Service Buildings to the Control and Auxiliary Buildings.

Piping of any system which conveys flow (makeup) to the heat rejection system has provisions to prevent back flow of the condenser circulating water into any area where flooding of safety-related components would result from a failure of the system providing the flow.

10.4.5.4 Inspection and Testing

Although not required from a safety standpoint, for each of the WBN plant units, the CCW sub-systems for that unit undergo hydrostatic and performance tests prior to operation of those sub-systems to ensure the adequacy of the system to meet operational requirements. For each unit, once the unit becomes operational, routine visual inspection of the system components and instrumentation should be sufficient to verify continued operability.

10.4.5.5 Instrumentation Application

Since low level radioactive liquid waste from the waste disposal system, the CPDS, and, at times, the steam generator blowdown are discharged into the CTB, provisions are made to isolate these discharges when adequate dilution does not exist or upon high radiation signal. Specifically, a flow element is provided in the CCW blowdown line upstream of the diffusers. If there is not at least 20,000 gpm passing through the

blowdown line or if the waste source exceeds a predetermined high radiation level setpoint, based on dilution, valves in the discharge lines from the three waste sources are automatically closed. (See Sections 10.4.6, 10.4.8, and 11.2). The CPDS and SGB may be released with the CTB dilution < 20,000 gpm provided the requirements of Section 11.2.4 are satisfied.

As described in Section 10.4.5.2, a signal of less than 3500 cfs is flowing through the hydro units of the upstream dam will result in cessation of blowdown discharge to the river by closing the valving in the diffuser flowpath to the river. If the diffuser flowpath is isolated, then the diffuser flow element will drop below 20,000 gpm causing the valves in the waste disposal system, steam generator blowdown system, and the CPDS discharge lines to close in order to preclude the possibility of discharging radioactive waste in the yard holding pond. See above for conditions permitting discharge when flow is less than 20,000 gpm.

10.4.6 Condensate Polishing Demineralizer System

10.4.6.1 Design Bases - Power Conversion

The function of the CPDS of each unit is to remove dissolved and suspended impurities from the secondary system. The CPDS removes corrosion products which are carried over from the turbine, condenser, feedwater heaters (after startup), and piping. The removal of impurities and corrosion products in the secondary system reduces corrosion damage to the secondary system equipment. The CPDS also removes impurities which might enter the system in the makeup water, and removes radioisotopes which are then carried over to the secondary cycle in the event of a primary-to-secondary steam generator tube leak. The CPDS will also be used to remove impurities which enter the secondary system due to condenser circulating water tube leaks. The continuous steam generator blowdown flow may be processed through the CPDS in normal operation, or it may be discharged when the radioactivity level is low. The blowdown will be treated by the CPDS when radioactivity levels exceeding release limits determined in accordance with ODCM are detected in this stream.

The CPDS will polish condensate before startup, during restarts and power generation as required. Prior to the startup mode, the steam generators are isolated from the feedwater. This will assure that the feedwater chemistry quality is acceptable before steam generation begins. Before feedwater is introduced into the steam generator, the CPDS demineralizer service vessel (CDSV) effluent quality will be such that the Feedwater Chemistry Specification can be met.

The CPDS has the capability of polishing the full flow of condensate. The CPDS CDSV design temperature is 140°F and the design pressure is 300 psig. The pressure drop across the CPDS demineralizer service vessels does not normally exceed 60 psi. When this pressure differential across the vessels is exceeded, the major part of the condensate flow will automatically bypass the demineralizer.

10.4.6.2 System Description

The CPDS for each unit consists of six mixed-bed CDSVs; the number of polishers in service varies with system conditions. The system also includes an external regeneration facility, and equipment to handle regenerate wastes.

The regeneration subsystem consists of a resin separation/cation regeneration tank, anion regeneration tank, and resin storage tank. The concentrated chemicals used in regeneration are supplied from the makeup water treatment plant acid and caustic storage tanks.

Additional equipment is provided in the regeneration system to promote efficiency in the process. A hot water tank supplies hot dilution water at the caustic mixing tee. An ammonium hydroxide tank and a pump are provided to inject ammonium hydroxide into the resin separation/cation regeneration tank and anion regeneration tank prior to and during regeneration.

The regenerant chemicals and the high conductivity rinse water containing regenerant chemicals flow to the batch neutralization tank or, alternatively, to the nonreclaimable waste tank. Both the neutralization tank and nonreclaimable waste tank are provided with the capability of adjusting the Ph of the regenerant chemical waste. If the inventory of these tanks is radioactive, it may be discharged to the cooling tower blowdown (CTB) if the radioactivity level is within ODCM limits. When ODCM limits are exceeded, the inventory is processed by a vendor (See Section 11.2). If the inventory of these tanks contains no gamma emitting radionuclides, it is pumped to the turbine building sump and subsequently discharged through the holding pond or, alternately, it is discharged to the CTB. The wash, rinse, and resin sluicing waters of low conductivity are collected in two high crud tanks. If the inventory of the high crud tanks contains no gamma emitting radionuclides, it is pumped to the Turbine Building sump and subsequently discharged through the holding pond or, alternately, it is discharged to the CTB if radioactivity levels are within ODCM limits. When ODCM limits are exceeded, the inventory may be processed by a mobile demineralizer (See Seciton 11.2). Flow diagrams for the demineralizer service vessels, regeneration equipment and waste handling equipment are shown in Figures 10.4-36A, 10.4-36B and 10.4-36C, respectively.

For each unit the CPDS CDSVs and regeneration equipment are located within the Turbine Building. The six CDSVs are arranged in three shielded compartments (two to a compartment). All regeneration vessels and chemical reclaim tanks are arranged in individual compartments. The hot water tank is also in the Turbine Building. The acid and caustic storage tanks are located in a separate structure near the Turbine Building.

The tanks in the CPDS are rubber-lined to prevent corrosion except the hot water tank (Keysite lined), the acid storage tank (unlined), and ammonium hydroxide tank (unlined). CPDS tanks are closed and are designed and fabricated in accordance with the ASME Code for Unfired Pressure Vessels Section VIII, 1974 edition.

The CPDS is not a safety-related system and is not required for the orderly shutdown of the reactor. The Turbine Building housing the CPDS equipment is a nonseismic structure; piping, piping hangers, and equipment in the CPDS are nonseismic. The system piping is in accordance with ANSI B31.1.

The CPDS CDSVs for each unit are arranged in parallel and are supplied by the condenser hotwell pumps via the inlet header. An outlet header collects the effluent from the demineralizer service vessels and supplies suction flow to either the condensate booster pumps or demineralized condensate pumps (see Section 10.4.7.1). The bypass valve is located across the influent and effluent headers in parallel with the CDSVs. Outlet piping from each service vessel is equipped with a resin trap.

The CPDS operates in either of three modes as determined by the water quality and the pressure differential accross the condensate demineralizer service vessels (CDSVs):

(1) Mode 1 - Full flow polishing (bypass valve closed), is the operating mode during which the unit's demineralizer service vessel bypass valve is manually selected for the close position.

(2) Mode 2 - Modulating bypass (bypass valve partially open), is the operating mode during automatic control when the pressure differential across the CDSVs influent and effluent headers is less than setpoint. In this mode, the major part of the condensate flow will be bypassed around the CDSVs. Only a minimum flow will be processed through the CDSVs which is enough to maintain the resin beds in a compact, standby condition.

(3) Mode 3 -Full bypass (bypass valve fully open), is the operating mode in the event the CPDS experiences loss of control air and/or electrical failure, or when the pressure differential across the CDSV influent and effluent headers exceeds the setpoint.

The CPDS bypass valve may be operated under automatic control. Override is provided for manually positioning the bypass valve in the 'open,' and 'close' positions. Modulating bypass protects the demineralizer service vessels from excessive pressure drop. The bypass valve may be manually placed in the full bypass position (and the CDSV inlet valves closed) when the inlet condensate temperature exceeds operational limits in order to protect the functional characteristics of the ion exchange resins. Continued operation in the bypass mode is dependent upon influent condensate water quality.

10.4.6.3 Safety Evaluation

Radionuclides are released to the secondary system when there is a steam generator tube leak. The radionuclides have essentially no effect on the resin ion exchange capacity. Also, filtered suspended solids do not affect ion exchange capacity. Although the radionuclide concentrations have no effect on resin capacity, potential

activity levels in the CDSVs and associated regeneration equipment make it necessary to shield the CPDS equipment.

Liquid radwaste is processed by the waste disposal system. Chapter 11 describes the radioactivity level and removal of radioactive material from the CPDS.

10.4.6.4 Inspection and Testing

For each unit the CPDS undergoes a preoperational test prior to startup (refer to Chapter 14). After startup and during shutdowns, each vessel in the system can be separately isolated for testing and visual inspection.

The CPDS is designed so that CDSVs, regeneration equipment, and most valves can be isolated from the system if testing or inspection is required, with no curtailment or interruption of power generation. Isolation valves on inlet and outlet of CDSVs and system bypass valves can be tested and inspected during shutdown if required.

10.4.6.5 Instrumentation

Instrumentation and controls are provided to perform the following functions:

(1) Measure, indicate, and record condensate conductivity in the effluent line of each CDSV.

High conductivity downstream of a particular CDSV indicates resin exhaustion.

All conductivity values are annunciated at the CPDS local control panel.

(2) Measure differential pressure between the CDSV battery influent and effluent headers, and open the valve bypassing the CDSVs on high differential pressure signal when the bypass valve is under automatic control.

(3) High differential pressure across the CDSVs is annunciated on the CPDS local control panel. Opening of the CDSV battery bypass valve is indicated on the CPDS local control panel and in the MCR.

(4) Measure and indicate condensate temperature at the influent header. High influent condensate temperature is alarmed at the CPDS local control panel.

(5) Measure, record, and indicate flow rates through individual CDSVs. The difference in flow rates through each CDSV indicates the extent of crud loading on each CDSV resin bed.

(6) Annunciate at the CPDS local control panel high pressure differential across each resin trap strainer.

(7) Measure, indicate, and record the dissolved sodium content in the effluent of the selected CDSV and in the effluent condensate header. High level sodium content is annunciated at the CPDS local control panel.

10.4.7 Condensate and Feedwater Systems

10.4.7.1 Design Bases

The condensate and feedwater systems are designed to supply a sufficient quantity of feedwater to the steam generator secondary side inlet during all normal operating conditions and to guarantee that feedwater will not be delivered to the steam generators when feedwater isolation is required. A complete discussion of feedwater isolation is included in Chapter 15.

The condensate and feedwater systems pumps take condensate from the main condenser hotwells and deliver water to the steam generators at an elevated temperature and pressure. These systems are capable of delivering water to the steam generators at the rated thermal power.

10.4.7.2 System Description

The flow diagrams for the condensate and feedwater systems are presented in Figures 10.4-7 and 10.4-8. Figures-10.4-9 through 10.4-15 and 10.4-17 and 10.4-18 provide the control and logic diagrams for this system.

The ability to meet the design requirements of Section 10.4.7.1 is provided by the following equipment (per unit):

(1) Hotwell Pumps

Number - 3
Manufacturer - Borg-Warner Corporation, Byron Jackson Pump Division
Type - VMT, four stages, single suction, vertical process
Size - 28KXFH
Design Point - 6700 gpm, 600 feet head
Motor Manufacturer - Parsons-Peebles, Ltd.
Motor Design - 1250 hp, 1180 rpm, 6600 V, 3 phase, 60 Hz, vertical, constant speed

(2) Condensate Booster Pumps

Number - 3
Manufacturer - Borg-Warner Corporation, Byron Jackson Pump Division
Type - DVDSR, single stage, double suction, double volute centrifugal
Size - 14x14x15H
Design Point - 9000 gpm, 680 feet head
Motor Design - 1750 hp, 3584 rpm, 6600 V, 3 phase, 60 Hz, horizontal, constant speed
Motor Manufacturer - Parsons-Peebles, Ltd.

(3) Main Feedwater Pumps

Number - 2
Manufacturer - Borg-Warner Corporation, Byron Jackson Pump Division
Type - HDR, single stage, double suction, double volute centrifugal
Size - 20x20x18B
Design Point - 23,600 gpm, 1890 feet head
Service Conditions - Pump suitable for continuous service to deliver up to 17,630 gpm at 402.3°F against a total head of approximately 2012 feet at 5012 rpm, while operating with a minimum net positive suction head of 200 feet.

(4) Standby Main Feedwater Pumps

Number - 1
Manufacturer - Borg-Warner Corporation, Byron Jackson Pump Division
Type - DVS, single stage, double suction, double volute, centrifugal
Size - 12X12X16
Design Point - 6100 gpm, 1890 feet head
Motor Design - 3700 hp, 3584 rpm, 6600 V, 3 phase, 60 Hz horizontal constant speed
Motor Manufacturer - Parsons-Peebles, Ltd.
Speed Increaser - Lufkin Model N1400C. 1.5:1 ratio

(5) Demineralized Condensate Pumps

Number - 3
Manufacturer - Ingersoll-Rand Company
Type - A, single stage, single suction, end suction process
Size - 10x18A9
Design Point - 6700 gpm, 150 feet head
Motor Manufacturer - Westinghouse
Motor Design - 350 hp, 1770 rpm, 460 V, 3 phase, 60 Hz, horizontal, constant speed

(6) Main Feedwater Pump Turbine

Number - 2
Manufacturer - Westinghouse Electric Corporation
Type and Speed - EMM-32AIN, Multi-stage, dual inlet, 5460 rpm
Throttle Pressure - LP steam, 146 psig
HP steam, 995 psig
Throttle Temperature - LP steam, 513°F

HP steam, 546°F
Back Pressure - 6.9 in of Hg absolute
Number of Stages - 6
Extraction Points - None
Rated Horsepower - 12,200 hp

(7) Main Feedwater Pump Turbine Condenser

Number - 2
Manufacturer - Westinghouse Electric Corporation
Tube Material - ASME SA688, 304 SST
Channel Design pressure - 350 psi
Channel Design temperature - 259°F
Shell Design Pressure - 20 psig and 30 in. mercury vacuum
Shell Design temperature - 160° F

(8) Gland Steam Condenser

Number - 1
Manufacturer - Westinghouse Electric Corporation
Tube Material - ASTM A249, TP316 Stainless Steel
Channel Design pressure - 400 psig
Channel Design temperature - 125°F
Shell Design Pressure - 400 psig
Shell Design temperature - 125° F

(9) Feedwater Heaters

Number - 21 (3 strings of 7 heaters)
Manufacturers - Nos. 1 and 2: Yuba Heat Transfer Corp.
Nos. 3 and 4: Foster Wheeler Energy Corp.
Nos. 5, 6, and 7: McQuay-Perfex Incorp.
Type - Closed, horizontal, U-tube
Tube Material - 304 SST

Heater No.	Channel Design Pressure (psi)	Shell Design Pressure (psig)	Channel Design Temp (°F)	Shell Design Temp (° F)
1	2000	545	480	480
2	2000	355	440	440
3	725	232	380	380

Heater No.	Channel Design Pressure (psi)	Shell Design Pressure (psig)	Channel Design Temp (°F)	Shell Design Temp (° F)
4	725	75	300	380
5	350	75	300	285
6	350	75	300	220
7	350	75	300	180

Feedwater heaters are designed in accordance with HEI standards for closed feedwater heaters and the ASME Boiler and Pressure Vessel Code, Section VIII. All piping and valves from the condenser hotwell to the feedwater isolation valve are designed in accordance with ANSI B31.1, while the remainder of the feedwater system is designed in accordance with the ASME Boiler and Pressure Vessel Code, Section III, Class 2.

The system boundaries extend from the condenser hotwell to the inlet of the steam generator. Condensate is taken from the main condenser hotwells by three vertical, centrifugal, motor-driven hotwell pumps. The head imparted by these pumps is sufficient to provide adequate NPSH to the main feedwater pumps during unit startup and low load operation.

A signal that NPSH to the main feedwater pumps is approaching a preset minimum level (signal provided by differential pressure between main feed pump suction and No. 2 feedwater heater shell at approximately 50% unit guaranteed load) alarms in the main control room. The three horizontal, centrifugal, motor-driven condensate booster pumps are started manually. These pumps, when operating in series with the hotwell pumps, are capable of delivering required flow with sufficient NPSH to the main feedwater pumps under all normal operating conditions as long as the condensate demineralizers are being by-passed.

However, when the condensate demineralizers are in service at higher loads, additional pumps are needed to provide sufficient NPSH to the main feedwater pumps. The demineralizer condensate pumps provide this capability.

The condensate demineralizers will act to keep condensate water quality within the limits of Section 10.3.5 for the steam generator feedwater. During normal operation, all flow except for 1100 gpm per service vessel in operation is bypassed around the demineralizer. See Section 10.4.6 for details of condensate polisher operation.

This small flow acts to keep the resin beds compacted so that their filtration capability is not momentarily unavailable in the event of a condenser tube leak and the subsequent switch from the bypass mode to full flow condensate demineralization. Conductivity recorders in the hotwell detect the tube leakage and provide annunciation. The demineralizers may be manually placed on full flow operation either during startup or normal operation, as water chemistry requirements dictate.

The two turbine driven, variable speed main feedwater pumps are capable of delivering feedwater to the four steam generators under all expected operating conditions. During certain times of the year, to improve plant efficiency, the standby main feedwater pump is used to supplement MFP flow at high plant loads. Also, the standby main feedwater pump will automatically start if one of the MFPs trip above 85% power. The standby main feedwater pump was originally used for plant startup and shutdown. However, since the standby main feedwater pump does not have a trip circuit to automatically start the AFW pumps, it can no longer be used for normal plant startup and shutdown in Modes 2 and 1. The standby main feedwater pump can be used as needed in Mode 3 for items such as system cleanup and pressure testing. The AFW pump(s) along with the Turbine Driven MFP(s) are used for plant startup, shutdown, and low power operation along with use of the feedwater bypass headers. The small bypass feedwater control valves provide increased sensitivity for flow regulation (i.e.,rangeability) during low-load operations, as compared to the larger main control valves. Feed pump speed is automatically adjusted to meet system demands.

(Unit 1 Only) The feed pump speed control system consists of three inter-related parts:

(1) The setpoint calculators sum the four steam flows, provide the lag on setpoint changes, and contain the basic scaling adjustments.

(2) The differential pressure controller compares the steam header pressure, feedwater header pressure, and calculated setpoints to determine the speed signal required.

(3) The feed pump manual/auto stations to provide the operator with the flexibility of choosing various operating modes. The unit operator will have the options to operate either or both pumps on manual speed control to base load his operation, to operate one pump on manual with the other automatically swinging with plant load changes, or to let both pumps swing with the load changes.

(Unit 2 Only) The main feedwater pump speed control program maintains a programmed differential pressure between the main steam header and the main feedwater pump discharge header. The programmed dp setpoint is determined by the average of the steam flow from all four steam generators.

The feed pump manual/auto stations provide the operator with the flexibility of choosing various operating modes. The unit operator will have the options to operate either or both pumps on manual speed control to base load his operation, to operate one pump on manual with the other automatically swinging with plant load changes, or to let both pumps swing with the load changes.

At high power levels, i.e., above 22% feedwater flow on increasing power and down to 14% feedwater flow on decreasing power, feedwater flows through each main feedwater line into the lower section of each steam generator. Flow is controlled automatically by adjustment of a feedwater control valve in each line. Each main feedwater control valve is positioned as a function of nuclear power by a three element controller using inputs from feedwater flow, steam flow and steam generator level.

Single element control using steam generator level is provided if the feedwater flow or steam flow signals are unavailable. The single element controller output can also be modified by inputs from wide range steam generator level and feedwater temperature for density compensation.

At low power levels, i.e., below 22% feedwater flow on increasing power and below 14% feedwater flow on decreasing power, each main feedwater control valve and feedwater isolation valve are closed, and for each steam generator, feedwater is routed through a small bypass line directly into the upper section of the steam generator. The required steam generator water level is maintained by automatically controlling the position of the feedwater bypass control valve in each feedwater bypass line.

The feedwater bypass control valve is positioned as a function of nuclear power by a three element controller using inputs from feedwater flow, steam flow and steam generator level. Single element control using steam generator level is provided for very low power levels or if the feedwater flow or steam flow signals are unavailable. The single element controller output can also be modified by inputs from wide range steam generator level and feedwater temperature for density compensation.

(Unit 2 Only) Each Unit 2 feedwater bypass control valve is used to maintain a tempering flow into the upper section of the respective Unit 2 steam generator during normal power operation when feedwater is flowing through the lower section of the respective Unit 2 steam generator. Tempering flow may be terminated temporarily to allow for valve maintenance.

Switchover from the feedwater bypass lines to the main feedwater lines on increasing power is manually performed. On decreasing power, changeover from the main feedwater lines to the bypass lines is achieved by manually switching on the automatic bypass controller. Manual control of the main feedwater control valves or feedwater bypass control valves is possible in any mode of operation.

Both the main feedwater control valves and the feedwater bypass control valves are pneumatically operated and are designed to fail close on loss of air.

During startup of either unit, the low-load automatic feedwater control system is used to approximatelly 22% of full feedwater flow.

(Unit 1 Only) Before switching to the lower feedwater nozzle, the feedwater must be at least 250° F to limit the number of feedwater system induced transients and the minimum temperature of continuous feedwater flow to the Unit 1 steam generator preheater region.

(Unit 2 Only) Before switching to the lower feedwater nozzle, the feedwater in the line to the lower (main) nozzle is warmed to not less than 250°F in order to minimize the potential for waterhammer (steam bubble collapse) in the steam generator preheater. Waterhammer could occur if cold feedwater were injected into the Unit 2 steam generators. Feedwater line warming is accomplished by flushing the cold water in the line downstream of the main feedwater regulator valves through the deaeration line to

the condenser. This forward flush operation is accomplished at 20 to 22% feedwater flow by flowing hot feedwater through this flow path to the condenser until temperature instrumentation in the feedwater line upstream of the junction with the deaeration line indicates a temperature greater than 250°F (nominal). During forward flush, the isolation valves upstream of each main feedwater regulator valve are closed and the bypass around each of these valves is opened. This procedure will cause the pressure upstream of the closed main feedwater isolation valves to be lower than the steam generator pressure. Consequently, no cold water in the main feedwater line can leak into the steam generator and cause waterhammer (bubble collapse) in the steam generator pre-heater.

(Unit 2 Only) The remaining portion of the main feedwater line from the junction with the deaeration line to the steam generator is purged of cold water by flowing hot water from the steam generators back through the main feedwater lines to the condenser via the deaeration line. This backflush operation is continued until temperature instrumentation in the main feedwater line downstream of the junction with the deaeration line indicates a temperature greater than 250°F nominal. Backflush flow is limited to 80,000 lb/hr per steam generator to prevent steam bubbles in the steam generator from entering the feedwater lines which could cause waterhammer from the bubbles collapsing, due to cooling.

(Unit 2 Only) The forward/back flush operation is accomplished manually by the operator using a single switch in the control room. The switch aligns the feedwater valves in forward flush mode then in back flush mode. Status lights are located in the control room so that the operator knows the position of the valves and knows when feedwater lines for each steam generator are warmed.

The systems for either unit normally operate at full load with three hotwell, three condensate booster, three condensate demineralizers, and two main feed pumps in service. Unit load can be continuously maintained at 85% guaranteed load with one main feed pump and the standby main feed pump in operation.

Heating of the condensate and feedwater is accomplished by passing it through a series of closed heat exchangers. A summary of secondary cycle heat exchangers used to preheat the condensate and feedwater are described below:

(1) Gland Steam Condenser - This exchanger condenses the steam leak off from turbine shaft seals and removes the non-condensibles (the result of shaft inleakage of air) from this steam. An externally connected, weighted check valve is provided to ensure minimum required flow through the condenser at low condensate flow conditions and to minimize pressure drop through the condenser during high condensate flow conditions.

(2) Main Feed Pump Turbine Condensers - Each main feed pump turbine is equipped with an individual surface type condenser. Control valves in the inlet and outlet condensate piping to these condensers provide the ability to

isolate condenser if its associated drive turbine is rendered inoperative and to force 100% condensate flow through the operating condenser, thus allowing maximum power operation of the remaining drive turbine.

(3) Steam Generator Blowdown Heat Exchangers - Two steam generator blowdown heat exchangers (dual shell first stage and single shell second stage) are provided to continuously subcool blowdown such that it may be processed and returned to the secondary cycle or discharged via cooling tower blowdown (see Section 10.4.8).

(4) Feedwater Heaters - Three parallel strings (A, B, and C) of heaters, each consisting of three low pressure feedwater heaters, three intermediate pressure feedwater heaters, and one high pressure feedwater heater are provided. The heaters are numbered from 1 to 7, with the highest pressure heater designated as No. 1. Motor operated isolation valves are provided at the inlet to each No. 7 heater and the outlet of each No. 5 heater, the inlet to each No. 4 heater and the outlet of each No. 2 heater, and at the inlet and outlet of each No. 1 heater. High-high water level in a heater shell will cause the isolation of the group of heaters in the stream in which the high-high level occurred (either the 5, 6, and 7 heaters, 2, 3, and 4 heaters, or No. 1 heater in either the A, B, or C streams). With all pumps in service, a complete string of 7 heaters can be out of service and full unit load can be maintained.

Tubes for the heaters are 304 SST. Tube-to-tube sheet joints in the feedwater heaters are expanded and welded.

Minimum flow bypasses are provided for equipment protection. The condensate system minimum flow bypass is located immediately upstream of the No. 7 heaters. The bypass control valve receives its operating signal from the station flow nozzle located upstream of the gland steam condenser. The valve plug's position is modulated to maintain at least 5500 gpm nominal flow through the flow nozzle. This flow is sufficient to protect the hotwell pumps and demineralized condensate pumps, to provide adequate cooling water to the gland steam condenser and MFPT condensers and to keep the demineralizer beds compacted at all times.

The condensate booster pumps are protected by automatic recirculation control (ARC) valves. The checking elements of these valves are calibrated to actuate pilot valves which, in turn, open or close the recirculation valves to maintain the minimum required flow through each pump.

The feedwater system has a minimum flow bypass line originating downstream of each feedwater pump to permit direct recirculation back to the main condensers. The bypass control valve receives its operating signal from its associated turbine driven main feedwater pump discharge flow transmitter; and modulates to maintain a minimum flow of 4000 gpm at rated speed. However, for extended periods of operation at recirculation flows, due to high vibration signature caused by high speed and low flow, the pump can be throttled to approximately 3300 rpm at which time flow should be approximately 2650 gpm and vibration signature would be acceptable. Minimum

flow for the standby main feed pump when it is operating is 1500 gpm (vendor evaluation has determined that minimum flows as low as 1100 gpm are acceptable). Piping is also provided around the main feed pumps to allow filling the steam generators without operating the main feed pumps.

An additional recirculation line is provided from each main feedwater loop, between the feedwater control valve and motor operated isolation valve, back to the main condenser. This deaeration line is used to deaerate and improve the water chemistry of the condensate and feedwater systems during startup using the hotwell pumps.

(Unit 1 Only) The modified long cycle recirculation flow path may be established just prior to using the deaeration line provided flow is maintained below approximately 3000 gpm through each MFP recirculationline when the water is less than 125° F.

(Unit 2 only) As described previously, for Unit 2 this deaeration line is used to provide a path for warming flow during the warming of the main feedwater piping loops prior to switching from the upper feedwater bypass loops.

10.4.7.3 Safety Evaluation

The feedwater system from the steam generator back through the motor operated isolation valves and check valves is a safety system and is designed to TVA Class B. This portion of the feedwater system is an integral part of the auxiliary feedwater system.

Feedwater flow to the steam generators is interrupted within 6.5 seconds of initiation of a feedwater isolation signal (the direct result of high-high level in a steam generator, high flood level detection in either the South or North MSV vault rooms, safety injection signal, or a reactor trip coincident with reactor coolant low T_{avg}). This isolation is accomplished by closure of redundant valves in the piping to each steam generator. The feedwater regulator valves will close within 6.5 seconds after initiation of a FWI signal. The signal to initiate closure of the regulating valves is available from both power Train A and power Train B. The Class 2, motor operated containment feedwater isolation valves will close within 6.5 seconds after power is available. The isolation valves associated with steam generator Nos. 1 and 3 are connected to power Train A while those associated with steam generator Nos. 2 and 4 are connected to power Train B. Closure of the startup valves bypassing the feedwater regulator valves is also guaranteed within 6.5 seconds. Each feedwater bypass isolation valve can be closed by Train "A" or Train "B" of the feedwater isolation signal. Each feedwater bypass regulator valve can be closed by a Train A signal for steam generator Nos. 2 and 4 or Train B signal for steam generator Nos. 1 and 3. The feedwater bypass isolation valve is a backup to the feedwater bypass regulator valve.

For additional protection, a feedwater isolation signal also trips the standby main feedwater pump and both turbine-driven main feedwater pumps (from either Train A or Train B), the condensate booster pumps and all demineralized condensate pumps. Trips of these pumps will reduce the condensate system pressure to a pressure less than the 400 psig and initiate an orderly shutdown of the remainder of the condensate and feedwater system, except the hotwell pumps which are left on line to facilitate

restart of the unit. On feedwater isolation trips of both main feedwater pumps, at least one main feedwater pump condenser is left unisolated. This allows the condensate system to continue to operate with hotwell pumps running on the short-cycle recirculation to condenser mode with flow through the gland steam condenser and demineralizers; and eventually, the modified long cycle recirculation flowpath through the MFP recirculation valves may be established just prior to full long cycle recirculation

With all heater drains being pumped forward, the condensate demineralizer in the bypass mode, and all heater banks in service, each hotwell pump and each condensate booster pump is capable of delivering 50% of the unit guaranteed flow while imparting sufficient head to the feedwater to meet system demands. With the demineralizer in the full flow mode, two of the three demineralized condensate pumps are sufficient to meet system demands. Thus, loss of any one of the three condensate booster pumps and/or any one of the demineralized condensate pumps simply results in flow being transferred to the remaining operational pumps with the reactor coolant system being unaffected.

Activation of the No. 3 heater drain tank high level switch coincident with low flow and turbine power > 85% initiates the No. 3 heater drain tank pump logic for a turbine runback preventing the unit from operating above 85% power. Thus, the loss of a hotwell pump and/or a condensate booster pump during this mode of operation will not affect the reactor coolant system. However, with expected pump degradation of the above indicated pumps, the unit may be reduced in power or pumps operated in the service factor of the pump.

If the unit is operating below 67% guaranteed load, loss of one main feed pump has no effect on the reactor coolant system, since one main feed pump is capable of delivering 67% guaranteed flow.

If the unit is operating above 85% guaranteed load and loss of one main feed pump occurs, feedwater flow to the steam generators must be restored to 85% guaranteed flow within 20 seconds to prevent a reactor trip. This is accomplished by the following:

(1) Automatic start signal to the electric motor driven standby main feedwater pump, if not in operation.

(2) Isolation of the condensate flow through the main feed pump turbine condenser associated with the tripped pump. Thus, 100% condensate flow is passed through the active main feed pump turbine condenser allowing maximum power operation of the active feed pump turbine.

(3) Acceleration of the active drive turbine to its 'high speed stop' speed.

(4) Main turbine runback is initiated and unit load is decreased below 85%.

If the unit is operating at above 67% but below 85% load, the above actions occur except that no unit load runback is required.

Insufficient NPSH at the main feed pump suction can result in a decrease in steam generator level. Low NPSH at the main feed pump suction is annunciated in the MCR, thereby alerting the unit operator of the need for a load runback or adjustment of system pressure to avoid a reactor coolant system transient.

The feedwater piping layout has been optimized to prevent water hammer induced by the piping system.

10.4.7.4 Inspection and Testing

The operating characteristics for each system pump are established throughout the operating range by factory tests. Each hotwell, demineralized condensate and condensate booster pump casing are tested hydrostatically in accordance with the appropriate codes and standards. All parts of each turbine driven main feed pump and motor driven standby main feed pump subject to hydraulic pressure in service are hydrostatically tested in accordance with the appropriate codes and standards.

All parts and assemblies of parts of the feedwater heaters are hydrostatically tested and tested otherwise as required by applicable sections of the Heat Exchange Institute Standards for Closed Feedwater Heaters; Standards of Feedwater Heater Manufacturers Association, Incorporated; and Section VIII, Unfired Pressure Vessels of the ASME Boiler Code. Heater tubes are tested as required by ASME SA 688.

Hydrostatic and other testing of the parts and assemblies of parts of the main feed pump turbine condenser channel and tubes are in accordance with applicable sections of the Heat Exchange Institute Standards for Closed Feedwater Heaters and Section VIII, Unfired Pressure Vessels, of the ASME Boiler Code.

Manways or removable heads are provided on the heat exchangers to provide access to the tube sheet for inspection, repair, or tube plugging.

Inservice inspection requirements are given in Chapter 3. Preoperational test requirements are given in Chapter 14. Surveillance test requirements are given in Chapter 16.

10.4.7.5 Instrumentation

Sufficient level controllers, flow controllers, level switches, limit switches, temperature switches, etc., are provided to permit personnel to conveniently and safely operate the condensate and feedwater system.

10.4.8 Steam Generator Blowdown System

10.4.8.1 Design Bases

The design bases for the steam generator blowdown system (SGBS) are:

(1) To achieve optimum effectiveness in the control of steam generator water chemistry, continuous blowdown along with continuous all volatile treatment (AVT) will be maintained for each steam generator during normal plant operation. The minimum blowdown flow rate will be 5 gpm per steam generator.

(2) Facilities are provided to treat up to approximately 350 gpm of cooled blowdown from one unit (approximately 87.5 gpm per steam generator). The maximum blowdown flow to the CTB is 262 gpm.

(3) Blowdown may be discharged to the CTB without treatment provided that the radioactivity concentration of the blowdown effluent does not exceed the Offsite Dose Calculation Manual (ODCM) limits. In this mode of operation, makeup water will have to be supplied to the condensate system from the condensate storage tanks.

(4) The discharge stream from the blowdown system will be monitored continuously for the radioactivity. The blowdown is diverted to the condensate demineralizers automatically if the radioactivity concentration reaches a variable setpoint consistent with the value determined in accordance with the ODCM. The design temperature for these demineralizers is 140°F, but the heat added to the condensate by this blowdown is not sufficient to endanger the demineralizers.

(5) Blowdown system discharge is sampled and analyzed for radioactivity in accordance with the ODCM. When blowdown is being treated, analyses will be performed as often as necessary for evaluation of equipment performance.

(6) Blowdown system components will be designed in accordance with Section 3.2.2.

10.4.8.2 System Description and Operation

A flow diagram of the SGBS is shown in Figure 10.4-24.

The blowdown flow from the four steam generators is piped to the turbine building where it is cooled in a stacked and second stage heat exchanger units. Cooling water is supplied from the condensate system and thus the heat given up by the blowdown is returned to the cycle. After the blowdown is cooled, it may be discharged to the condensate line upstream of the CDSV where any impurities are removed. If blowdown is not routed to the CDSV, it may be sent to the CTB or to the condenser hotwell. When dumping to the CTB, the blowdown is automatically diverted back to the CDSV on loss of CTB flow or if the radiation level of the blowdown exceeds the value determined in accordance with the ODCM.

(Unit 2 Only)
The Unit 2 SGBS does not include any blowdown path that routes flow to or from a flash tank. Unit 2 SGBS piping has no connection to any inlet or outlet line of any blowdown flash tank.

Individual blowdown sample lines from each steam generator may be monitored for radioactivity so that a leaking steam generator can be identified. A blowdown sampling system to analyze the blowdown chemistry is provided.

The radioactive waste treatment, and process and effluent radiological monitoring aspects of the SGBS are described in Section 11.2.

There is temperature sensor located at the entrance to demineralizer beds, which alarms at local control panel; and operator action initiates manual bypass of the beds if the temperature exceeds the maximum allowable for demineralizer resins.

The blowdown control valve, located in the common line downstream of the heat exchangers, is used to regulate the blowdown flow rate. The manual throttling valves, located in the individual lines from each steam generator, are used to proportion the flow as required.

Main condenser inleakage may result in full-flow condensate demineralizer operation as described in Section 10.4.6.2. Steam generator blowdown may not need to be increased for this mode of operation.

10.4.8.3 Safety Evaluation

The blowdown system described in Section 10.4.8.2 provides sufficient capacity for treating radioactive blowdown liquid. It also minimizes release of radioactivity, and permits recycle of most of the water in the blowdown stream.

Capacity

The present system provides capacity for treating up to approximately 350 gpm of blowdown liquid per unit. This is sufficient to treat the highest expected blowdown flow rate from the steam generators. Water chemistry requirements are discussed in Section 10.3.5.

Radioactivity Releases

Radioactivity releases due to normal operation of the SGBS are discussed in Section 11.2.

Unusual Design Condition

In the event of a flood above plant grade, the normal blowdown paths are isolated and the blowdown is released to the roof of the south main steam valve room. The system is capable of operating for 100 days in this mode and with only emergency diesel power available (refer to Section 2.4.14).

System Performance During Abnormally High Primary-to-Secondary Leakage

Abnormally high primary-to-secondary leakage has no significant effect on the blowdown. A leak rate in excess of the Technical Specification limit requires shutdown of the unit. The blowdown system is capable of operating with a leak rate approaching 1 gpm. A 1 gpm leak rate would not require that the blowdown rate be increased above 262 gpm in order to maintain specified secondary system water chemistry unless it occurred at a time when condenser inleakage was high. With a 1 gpm leak, radiation levels in the vicinity of the blowdown system equipment would be higher than with normal operating radiation levels, but would be within acceptable limits.

In the event of a primary-to-secondary leak in excess of 1 gpm, the blowdown system could be operated after unit shutdown in order to clean the secondary system.

Failure Analysis of System Components

Analyses of various failures in the system are given in Table 10.4-2.

10.4.8.4 Inspections and Testing

Prior to operation of the steam generator blowdown system, instruments are calibrated and interlocks and controls are tested to verify that they function properly. The performance of the heat exchangers, tank and demineralizers is determined during tests of the secondary system. Routine inspections and maintenance are performed on system components.

Preoperational test requirements are given in Chapter 14. Surveillance test requirements are given in Chapter 16.

10.4.9 Auxiliary Feedwater System

10.4.9.1 Design Bases

The auxiliary feedwater (AFW) system supplies, in the event of a loss of the main feedwater supply, sufficient feedwater to the steam generators to remove primary system stored and residual core energy. It may also be required in some other circumstances such as the evacuation of the MCR, cooldown after a LOCA for a small break, maintaining a water head in the steam generators following a LOCA, a flood above plant grade, Anticipated Transient Without Scram (ATWS) event, and 10 CFR 50, Appendix R, Fires.

The system is designed to start automatically in the event of a loss of offsite electrical power, a trip of both turbine driven main feedwater pumps, a safety injection signal, an ATWS Mitigation System Actuation Circuitry (AMSAC) signal, or low-low steam generator water level, any of these conditions will result in, may be coincident with, or may be caused by a reactor trip. The AFW will supply sufficient feedwater to prevent the relief of primary coolant through the pressurizer safety valves and the uncovering of the core. It has adequate capacity to maintain the reactor at hot standby for two hours and then cool the RCS to the temperature at which the residual heat removal (RHR) system may be placed in operation, but it cannot supply sufficient feedwater for power generation.

Note that with reactor power less than 50%, the AFW start signal generated by lo-lo steam generator level is delayed by the trip time delay logic. See Section 7.2 for details.

Engineered Safety Feature (ESF) standards are met for the AFW System except for the condensate water supply, which is backed up by the essential raw cooling water (ERCW). The ESF grade portion of the system is designed for seismic conditions and single failure requirements, including consideration that the rupture of a feedwater line could be the initiating event. It will provide the required flow to two or more steam generators regardless of any single active or passive failure in the long term.

Seismic and quality group classifications of the AFW system are shown in Figures 10.4-21 and 10.4-21A. The industry codes and standards corresponding to these TVA classifications are given in Section 3.2.

10.4.9.2 System Description

The two reactor units have separate AFW systems, as shown in Figure 10.4-21, which share some support facilities such as parts of the Control System. As on all other engineered safety features, the independence of the two systems will be guaranteed in accordance with GDC 5.

Each system has two electric motor-driven pumps and one turbine-driven pump. Each of the electric pumps serves two steam generators; the turbine pump serves all four. All three pumps supporting a unit automatically deliver rated flow within one minute upon a trip of both turbine-driven main feedwater pumps, loss of offsite power, an AMSAC signal, a safety injection signal or low-low steam generator water level. The motor driven pumps (MDPs) start on a two-out-of-three low-low level signal in any steam generator and the turbine driven pump starts on a two-out-of-three low-low level signal in any two steam generators. Each pump supplies sufficient water for evaporative heat removal to prevent operation of the primary system relief valves or the uncovering of the core. The operator has the capability to open an additional recirculation line on the MDPs when there is low decay heat required to be removed from the SG. These lines contain a normally closed valve that closes on an accident signal. The valve is operable after the accident signal, but if an additional accident signal occurs, the valve would be reclosed. This ensures that the forward flow requirements to remove decay heat have been satisfied. Significant pump design parameters are given in Table 10.4-1.

The preferred sources of water for all auxiliary feedwater pumps are the two 395,000 gallon condensate storage tanks. A minimum of 200,000 gallons in each tank is reserved for the AFW Systems by means of a standpipe through which other systems are supplied. As an unlimited backup water supply for each unit, a separate ERCW system header feeds each motor-driven pump. The turbine-driven pump can receive backup water from either ERCW header. The ERCW supply is automatically (or remote-manually) initiated on a two-out-of-three low pressure signal in the AFW system suction lines. Pump protection during the automatic transfer to the ERCW supplies is assured by providing sufficient suction head and flow to the pumps and is

verified by system analysis. Since the ERCW system supplies poor quality water, it is not used except in emergencies when the condensate supply is unavailable.

In addition, the high pressure fire protection (HPFP) system may be connected downstream of each motor driven AFW pump by a spool piece to supply unlimited raw water directly to the steam generators in the unlikely event of a flood above plant grade. Water from the HPFP system is supplied by four high pressure, vertical turbine, motor-driven, Seismic Category I pumps conforming to the requirements of ASME B&PV Code Section III, Class 3 with each having a rating of 1590 gpm at 300 feet head. These pumps are installed in the Seismic Category I Intake Pumping Station with motors above the maximum possible flood level. Each pump is capable of supplying 100% of the auxiliary feedwater demands for both units during a flood above plant grade. The four pumps are supplied from normal and emergency power with two pumps assigned to each of the two emergency power trains. Each pair of pumps on the same power train takes suction from a common sump which receives water through a settling baffle arrangement for all normal, and flood reservoir levels.

The AFW system is designed to deliver 40°F to 120°F water to the secondary side of the steam generators at a pressure ranging from the RHR system cut-in point of 350°F in the RCS (equivalent to 110 psig in the steam generators) to the lowest MSSV set pressure, plus 3% set error, plus 3% accumulation pressure (1257 psig).

Separate ESF power subsystems and control air subsystems serve each motor driven AFW pump and its associated valves. The valves associated with the turbine-driven pump are served by one of the two electric and control air subsystems. The turbine-driven pump valves associated with SG 1 and SG 2 are served by Train B and the valves associated with SG 3 and SG 4 are served by Train A. The turbine-driven pump receives control power from a third dc electric channel that is distinct from the channels serving the motor driven pumps.

10.4.9.3 Safety Evaluation

For the design bases considerations discussed in Section 10.4.9.1, sufficient feedwater can be provided over the required pressure range even if the failure of a feedwater line is the initiating event, any one AFW pump fails to start, and no operator action is taken for 12 minutes.

The 'Loss of Normal Feedwater' and loss of offsite power analyses in Chapter 15 demonstrate that the auxiliary feedwater system satisfies the design bases described in this section.

In the event that loss of offsite power (LOOP) occurs, 410 gpm of AFW delivered to two steam generators within one minute will prevent relief of reactor coolant via the pressurizer safety valves. Water levels in the steam generators will remain above the required minimum tube sheet coverage. The AFW system meets these requirements even when the single failure criterion is applied.

In the event of a feedwater line break, essentially the same requirements are imposed and act as for the LOOP case. Other cases discussed in Section 10.4.9.1 impose less stringent conditions.

Following a loss-of-coolant accident (LOCA) for a small break, with offsite power, the RCS pressure and temperature decrease at a relatively slow rate. The AFW system provides sufficient flow to the steam generators so that RCS cooldown can proceed. In this case, the AFW system function is similar to its function following other events described in Section 10.4.9.1, such as loss of offsite electrical power. In contrast, the AFW system serves a distinctly different function during a large break LOCA, where steam generator tube leaks may be present. A large LOCA causes a rapid depressurization of the RCS so that the secondary side pressure and temperature exceed primary pressure and temperature, and consequently any fission products in the RCS cannot escape to the secondary side. Subsequent cooling of the secondary side fluid could eventually reduce the secondary side pressure to atmospheric, permitting any fission products in the RCS to escape into the secondary system. The AFW system is used to maintain sufficient water level on the steam generator secondary side so that static head prevents primary-to-secondary tube leakage and prevents the escape of any fission products.

Whenever a flood above plant grade is anticipated, an orderly shutdown to hot shutdown and a cooldown to cold shutdown will be initiated immediately. In a little more than 5 hours after reactor shutdown, the secondary system pressure will be reduced to approximately 100 psig. Within 27 hours after reactor shutdown, the fire-protection system piping will be connected to the auxiliary feedwater discharge piping by means of special spool pieces not normally installed, and the secondary system pressure will be maintained $\leq$ 125 psia. Operator action is taken, during a flood transient at 17 hours, to reduce SG operating pressure to < 80 psig to facilitate the supply of cooling water from the HPFP System in the event of the failure of 0-PCV-26-18 to close. Valve 0-PCV-26-18 is mounted in the HPFP pump recirculation line to the river and is non-safety grade. This pressure is sufficient for decay heat removal. When the flood exceeds plant grade, the auxiliary feedwater pumps will be inoperable, and the fire protection pumps, which are located above the maximum possible flood elevation, will supply feedwater.

Appropriate portions of the HPFP system are designed to function under normal conditions as well as for the maximum possible flood with the coincident or subsequent loss of the upstream and/or downstream dams. The HPFP pumps are located in the intake station above the flood line and are arranged to supply water directly to the steam generators in the event the auxiliary feedwater pumps are flooded.

The portion of the HPFP system which supplies auxiliary feedwater to the steam generators is ASME Section III, Class 3, Seismic Category I with the exception of the fire pumps discharge relief valve. These valves are replaced by ASME Section III, Class 3 blind flanges during flood mode preparations to ensure the integrity of the ASME Section III, Class 3 auxiliary feedwater supply piping during flood mode operation.

The AFW system is required to be available in the event of an ATWS event. The most severe ATWS scenarios have been determined to be those in which there is a complete loss of normal feedwater (Reference WCAP-10858). The design basis events for the AMSAC are Loss of Normal Feedwater/ATWS and Loss of Load/ATWS. Since there is a complete loss of normal feedwater during both of these transients, the accident analysis of both transients (Chapter 15) assumed AFW reaches full flow within 60 seconds after the initiating event for long term reactor protection. Also, the Loss of Normal Feedwater transient assumed a turbine trip within 30 seconds after the initiating event to maintain short term pressures below ASME Service Level C pressure limits. Normally these features will be actuated by the RPS. However, if a common mode failure to the RPS incapacitates AFW initiation and/or turbine trip in addition to prohibiting a scram, then an alternate method of providing AFW flow and a turbine trip is required to maintain RCS pressure below ASME Service Level C pressure limits. These two functions, turbine trip and AFW flow actuation, are provided via the AMSAC.

The AFW piping system layout has been optimized to prevent water hammer occurrences induced by the piping system.

Minimum flow rate requirements are met by the system for the design transients or accident conditions shown in Table 10.4-6, even if the worst case single active failure occurs simultaneously. The single active failures considered in the table are listed below:

(A) Alternating current train failure

(B) Turbine-driven pump (TDP) failure

(C) Motor-driven pump (MDP) failure

(D) Pressure control valve failure (MDP-runout protection)

(E) Level control valve failure for TDP

(F) Level control valve failure for MDP

(G) Pressure switch failures

(H) AFW System check valve failure (failure to close on reverse flow)

(I) Flow controller failure (TDP-runout protection)

Operator intervention within 10 minutes is required in order to meet maximum flow requirements for the main steamline break inside containment, or within 12 minutes (based on recent safety reanalysis) to meet the minimum flow requirements for the feedline rupture. However, the original 10 minute requirement is maintained which is conservative.

In addition to using high quality components and materials, the AFW system provides complete redundancy in pump capacity and water supply for all cases for which the

system is required. Under all credible accident conditions, at least one AFW pump is available to supply two steam generators not affected by the accident with the required feedwater. Only two steam generators are required to be usable for any credible accident condition.

Redundant electrical power and air supplies assure reliable system initiation and operation. The electric motor-driven pumps and associated controls, valves, and other supporting systems are powered by offsite or onsite ac sources. The exceptions are the MDP level control valves and the control circuits supplied by trained dc power. The TDP and associated valves, controls, and other supporting systems are powered by steam and dc electric power, except for four 480V ac power operated valves in the steam supply lines to the pump turbine which are included to satisfy pipe rupture criteria. Steam for the turbine driven pump is provided from either of two of the four main steam loops as controlled by two of these valves. They assure that only one steam source is available at a time, and, in the event of a pipe rupture, prevent two steam generators from blowing down simultaneously. The other two valves simply isolate in the event of a pipe rupture (due to high temperatures in the TDP room). Four of these are motor operated, fail as is, and all but the one isolating the standby steam source are normally open. This assures that a steam supply to the turbine will be available for design basis events and a LOOP event (see Table 10.4-3, items 2, 4, and 5). Failure modes and effects analyses for the AFW System are presented in Tables 10.4-3, 10.4-4, and 10.4-5.

During certain postulated 10CRF50, Appendix R fires, the electric cables for the electro-pneumatic controllers of the turbine-driven steam generator level control valves (LCV) could be destroyed. A backup source of compressed nitrogen has been provided to allow manual control of the LCVs for both the station blackout and Appendix R fire. No electric power is required for the operation of this backup nitrogen source. Valves associated with this backup source must be manually operated to align the high pressure nitrogen bottles and associated piping to take local manual control of the LCVs. The LCV position is adjusted upon orders from either the Control Room or the Auxiliary Control Room, based on the observed water level in the steam generators being controlled.

10.4.9.4 Inspection and Testing Requirements

A comprehensive test program is followed for the AFW system. The program consists of periodic tests of the activation circuitry and mechanical components to assure reliable performance throughout the life of the plant. During plant operation, the system can be tested by pumping condensate storage water to the condensate storage tank. ERCW and HPFP water will not be fed to the steam generators during tests, but separate tests on the ERCW and HPFP system will assure the availability of the alternate water supplies.

Test requirements are given in Chapter 14.

Surveillance test requirements are given in Chapter 16. Inservice inspection requirements are given in Chapter 3.

10.4.9.5 Instrumentation Requirements

The three pumps start automatically on a loss of offsite power, trip of both turbine driven main feedwater pumps, a safety-injection signal, or a AMSAC signal. The electric-motor-driven pumps also start automatically on a two-out-of-three low-low level signal from any steam generator, and the turbine driven pump starts automatically on a two-out-of-three low-low level signal from any two steam generators. All pumps can be started remote-manually.

A modulating level control valve (which is normally closed) between each pump and each steam generator fed by the pump receives an opening signal on a low-low water level in the steam generator. For the motor driven pumps, two modulating level control valves, a 4-inch and a parallel 2-inch, (which are normally closed) between each pump and each steam generator fed by the pump receives an opening signal on a low-low water level in the steam generator. For the motor driven pumps these valves will continue to modulate and automatically maintain steam generator water level. After the steam generator decreases in pressure to a certain setpoint the 4-inch valve will close to protect it from cavitation damage. The 2-inch LCV is designed for extended operation at low flows and high pressure drops. The system may be controlled manually. If the system is being tested in the manual mode and an automatic start signal is received, the control will revert to automatic. After an accident, the operator can take manual control by blocking the accident signal with the handswitch. However, if another accident signal occurs (such as would happen if the operator allowed the steam generator water level to drop to the low-low level) the control will again revert to automatic. As discussed in 10.4.9.3, there are postulated events when the turbine driven AFW pump LCV may be under local manual control. Automatic operation during these events will not be possible.

Figures 10.4-16, 10.4-19 and 10.4-20 give details of the control and logic of the AFW system.

References:

None.

Table 10.4-1 Auxiliary Feedwater Pump Parameters

Total Number Per Unit	3
Electric Driven	2
Turbine Driven	1
Design Flow Rate, gpm	
Electric Driven, each	450
Turbine Driven	790
Design Pressure, psig	1600
Design Temperature, °F	40 to 120
Design Head, feet	
Electric Driven (as tested)	3250.5
Turbine Driven	3350

Table 10.4-2 Failure Analysis, Steam Generator Blowdown System (Page 1 of 2)

Failure	Consequences	Action
1.Rupture of blowdown line between steam generator and blowdown isolation valves inside containment and break between blowdown isolation valves and containment penetration.	Hot water under pressure partially flashes to steam. Pressure in lower compartment increases, and vapor passes through ice beds. Water level in affected steam generator increases and then drains. Radioactivity present in steam generator remains inside containment.	When containment pressure reaches the high pressure setpoint, reactor is automatically scrammed, Phase “A” containment isolation valves close. Main feedwater lines isolate, blowdown isolation valves close, and auxiliary feedwater pumps start. Charging pumps start and pump borated water into the primary system. When it is determined that the fault is not in the primary system, it is put into hot shutdown operation. If the break happens between the isolation valve and the containment penetration, automatic closure of the isolation valves initiated by the containment pressure signal terminates the release. If the break is ahead of the isolation valve when the cause of the fault is identified, auxiliary feedwater to the affected steam generator is cut off and the steam generator is allowed to boil and drain itself dry.
2.Rupture of blowdown line from outside containment penetration to blowdown control valve downstream of heat exchanger.	Hot water under pressure escapes into main steam valve vault, outside the building, or inside the turbine building and partially flashes to steam. Some of radioactive material in blowdown will escape directly to atmosphere or be carried out with turbine building ventilation exhaust, depending on where the rupture occurs.	When the leak is discovered, the operator closes all blowdown isolation valves and then opens them one at a time to locate the leak. The unit is shut down as necessary to repair the leak.
3.Rupture of blowdown line downstream of the blowdown control valve in the heat exchanger flow path.	Water under pressure escapes into turbine building and is collected by liquid waste system.	Same as (2)
4.Failure of blowdown control valve.	Flow will increase to maximum value allowed by manual throttling valves.	When the failure is discovered, the containment isolation valves will be closed so that the control valve can be repaired.

Table 10.4-2 Failure Analysis, Steam Generator Blowdown System (Page 2 of 2)

Failure	Consequences	Action
5.Tube rupture in a heat exchanger	Blowdown water escapes into the heat exchanger cooling water channel.	When the failure is discovered, the containment isolation valves will be closed so that the heat exchanger can be repaired.

THIS PAGE IS INTENTIONALLY LEFT BLANK

Table 10.4-3 Failure Mode & Effects Analysis Steam Supply Subsystem (Sheet 1 of 2)

Mode of Operation: 1-Hot Standby, 2-Startup, 3-Power Operation, 4-Normal Shutdown, 5-Emergency Shutdown, 6-Design Basis Event (Listed in Remarks Column)

COMPONENT	FUNCTION	MODE OF OPER. 1	2	3	4	5	6	FAILURE MODE	METHOD OF DET.	EFFECT ON SUBSYSTEM	EFFECT ON SYSTEM	REMARKS*
1. Main Steam Piping	Source of Steam	X	X	X		X	X	---	---	---	---	See pipe failure analysis
2. FCV 1-16 (FCV 1-15)	Provides two different steam supplies, but to prevent blow-down of two SG in event of pipe rupture, only one steam source is available at one time. Isolation Valve only	X	X	X		X	X	Fails Closed	Control Room (Valve Position (Ind.)	Loss of one of two steam sources. No effect unless pipe rupture, then blowdown of one SG and loss of flow from TD pump.	None	Redundant steam source available from other SG Motor-Driven pumps would provide req'd feedwater flow.
		X	X	X		X	X	Fails Open				
3. Check Valve (1-892, 1-891)	Prevents reverse flow and blowdown in case of pipe rupture.	X	X	X		X	X	Fails Closed	None unless valve FCV 1-16 open, the control room ind., control room, from effect on subsystem (no feedwater flow).	Loss of one of two steam sources If pipe rupture could close both steam sources and thus flow from TD pump.	None	Redundant steam source available from the SG and Motor-Driven pumps would provide req'd flow. Motor-Driven pumps would provide req'd. flow.
		X	X	X		X	X	Fails Open				
4. FCV 1-18	Isolates in case of pipe rupture. Isolation Valve only					X	X	Fails Closed	Control Room (Valve Position Ind.)	Loss of steam supply. None	None	Motor-driven pumps would provide req'd. flow. If isolation req'd redundant FCV-1-17 would provide this feature
						X	X	Fails Open				
5. FCV 1-17	Isolates in case of pipe rupture.					X	X	Fails Closed	Control Room (Valve Position Ind.)	Loss of steam supply None	None	Motor-driven pumps would provide req'd flow. If isolation req'd redundant FCV-1-18 would provide this feature
						X	X	Fails Open				

Table 10.4-3 Failure Mode & Effects Analysis Steam Supply Subsystem (Sheet 2 of 2)

Mode of Operation: 1-Hot Standby, 2-Startup, 3-Power Operation, 4-Normal Shutdown, 5-Emergency Shutdown, 6-Design Basis Event (Listed in Remarks Column)

COMPONENT	FUNCTION	MODE OF OPER. 1	2	3	4	5	6	FAILURE MODE	METHOD OF DET.	EFFECT ON SUBSYSTEM	SYSTEM	REMARKS*
6. FCV 1-51	Trip & throttle valve					X	X	Fails Closed	Control Room (Valve Position Ind.)	Turbine Trip and loss of Aux. FW Flow from TD pump. In the event of a loss of load (pipe break) governor valve would limit pump speed.	None	Motor-driven pumps would provide req'd flow.
						X	X	Fails Open				
7. FCV 1-52	Governor Valve					X	X	Fails Open	Control Room (Valve Position Ind.)	Turbine Trip and loss of Aux. FW Flow from TD pump.	None	Motor-driven pumps would provide req'd flow.
						X	X	Fails Closed				
8. Turbine	Drives pump					X	X	TURBINE Failure	Control Room (no FW Flow)	None	None	Motor-driven pumps would provide req'd flow.
All Components (1-8)	All Functions	X	X	X	X	X	X	All modes	Visual/Control Room	None	None	Since postulated accidents are considered only for the design basis event, a single component failure (during mode 1-5 operation) will be less severe than the failures considered above and will not affect the ability of the Aux. FW system to perform its intended design function.

*Consequences for design basis events are not listed for mode 6 operation unless otherwise noted. Also, see footnote for turbine-driven (T-D) pump subsystem.

Table 10.4-4 Failure Mode & Effects Analysis Turbine-Driven (TD) Pump Subsystem (Steam Generator (SG) - Loop No. 4 Typical (Sheet 1 of 7)

TRAIN S FAILURE MODES AND EFFECTS ANALYSIS
Cooldown for Stage 1 of DBE Flood
Main Feed Line Break with LOOP
Large Break LOCA with LOOP
Loss of Normal Feedwater with LOOP
Main Steam Line Break with LOOP

ITEM NO.	COMPONENT	FUNCTION	FAILURE MODE	POTENTIAL CAUSE	METHOD OF DETECTION	EFFECT ON SYSTEM	EFFECT ON PLANT	REMARKS
1.	Check valve 2-3-810.	Isolates the safety-related suction line for the TDP 2A-S from its non-safety water source	Stuck closed.	Mechanical failure.	Control Room indication via pressure switches flow indicator FI-3-142A.	Loss of TDP.	None.	MDP 2A-A & 2B-B provides flow to all 4 SGs.
			Stuck open.	Mechanical failure.	No method available.	Degradation of flow from TDAFW pump if supplied from ERCW.	None.	TDP will still be operable; however, MDPs are still available to all SGs.
2.	TDP 2A-S	Provides Feedwater flow to all four SGs.	Fails to start.	Mechanical failure, spurious control signal.	Control Room indication via indicator FI-3-142A.	Loss of flow to all four SGs.	None.	MDPs 2A-A & 2B-B provides flow to all 4 SGs.
			Seal fails.	Mechanical failure.	Control Room indication reduced flow via FI-3-142A.	TDP 2A-S pump flow is diminished.	None.	MDPs 2A-A & 1B-B will provide flow to all four SGs.

Table 10.4-4 Failure Mode & Effects Analysis Turbine-Driven (TD) Pump Subsystem (Steam Generator (SG) - Loop No. 4 Typical (Sheet 2 of 7)

TRAIN S FAILURE MODES AND EFFECTS ANALYSIS
Cooldown for Stage 1 of DBE Flood
Main Feed Line Break with LOOP
Large Break LOCA with LOOP
Loss of Normal Feedwater with LOOP
Main Steam Line Break with LOOP

ITEM NO.	COMPONENT	FUNCTION	FAILURE MODE	POTENTIAL CAUSE	METHOD OF DETECTION	EFFECT ON SYSTEM	EFFECT ON PLANT	REMARKS
3.	Check Valve 2-3-864	Maintains water inventory in downstream piping of TDP 2A-S by preventing reverse flow.	Stuck closed.	Mechanical failure.	Control Room indication via flow indicator FI-3-142A.	Loss of flow to all four SGs.	None.	MDPs 2A-A & 2B-B provides flow to all 4 SGs.
			Stuck open.	Mechanical failure.	None.	None, if TDP 2A-S is running. If pump is not running, (no initiating event), water would be maintained in the pump A discharge piping up to LCVs 3-172,-173, -174 & -175 by pressure of the min reserve water in the CST (EL 745'-6.365" plus the atmospheric pressure above the water in the tank.	None.	No loss of pump*.

Table 10.4-4 Failure Mode & Effects Analysis Turbine-Driven (TD) Pump Subsystem (Steam Generator (SG) - Loop No. 4 Typical (Sheet 3 of 7)

TRAIN S FAILURE MODES AND EFFECTS ANALYSIS
Cooldown for Stage 1 of DBE Flood
Main Feed Line Break with LOOP
Large Break LOCA with LOOP
Loss of Normal Feedwater with LOOP
Main Steam Line Break with LOOP

ITEM NO.	COMPONENT	FUNCTION	FAILURE MODE	POTENTIAL CAUSE	METHOD OF DETECTION	EFFECT ON SYSTEM	EFFECT ON PLANT	REMARKS
4.	AOV LCV-3-175 (fails in closed position) spring to close air to open	Regulates AFW flow to SG 4 from TDP 2A-S.	Fails to open.	Control failure.	Control Room indication via control switch HS-3-175A.	Loss of AFW flow to SG 4.	None.	MDP 2B-B will provide flow to SG 4.
			Fails to close.	Control failure.	Control Room indication via control switch HS-3-175A.	AFW flow to SG 4 unregulated. Diminished flow to SGs 1, 2 & 3.	None.	Operator action required to isolate TDP 2A-S to prevent SG 4 overfill.
			Stuck open.	Mechanical failure.	Control Room indication of SG 4 level. High level via XA-55-3C-63B.	AFW flow to SG 4 unregulated. Diminished flow to SGs 1, 2 & 3.	None.	Operator action required to isolate TDP 2A-S to prevent SG 4 overfill.
			Stuck closed.	Mechanical failure.	Control Room indication via control switch HS-3-175A.	Loss of AFW flow to SG 4.	None.	MDP 2B-B will provide flow to SG 4.

Table 10.4-4 Failure Mode & Effects Analysis Turbine-Driven (TD) Pump Subsystem (Steam Generator (SG) - Loop No. 4 Typical (Sheet 4 of 7)

TRAIN S FAILURE MODES AND EFFECTS ANALYSIS
Cooldown for Stage 1 of DBE Flood
Main Feed Line Break with LOOP
Large Break LOCA with LOOP
Loss of Normal Feedwater with LOOP
Main Steam Line Break with LOOP

ITEM NO.	COMPONENT	FUNCTION	FAILURE MODE	POTENTIAL CAUSE	METHOD OF DETECTION	EFFECT ON SYSTEM	EFFECT ON PLANT	REMARKS
5.	Condensate Storage Tank	Water Supply	Tank Discharge Plugged	Mechanical failure.	Control Room Alarm (Loss of suction pressure).	Loss of condensate water supply.	None.	On loss of condensate supply, the essential raw cooling water (ERCW) system supply is automatically provided.
6.	Check valve 2-3-874	Prevents reverse flow in TDP 2A-S discharge line to SG 4.	Stuck Closed.	Mechanical failure.	Control Room indication via flow indicators FI-3-142A & -170A.	Loss of TDP 2A-S flow to SG 4.	None.	MDP 2B-B will provide flow to SG 4.
			Stuck open.	Mechanical failure.	None.	Not a problem if TDP 2A-S is running, if not LCV-3-175 will prevent reverse flow thru pump discharge piping.	None.	

Table 10.4-4 Failure Mode & Effects Analysis Turbine-Driven (TD) Pump Subsystem (Steam Generator (SG) - Loop No. 4 Typical (Sheet 5 of 7)

TRAIN S FAILURE MODES AND EFFECTS ANALYSIS
Cooldown for Stage 1 of DBE Flood
Main Feed Line Break with LOOP
Large Break LOCA with LOOP
Loss of Normal Feedwater with LOOP
Main Steam Line Break with LOOP

ITEM NO.	COMPONENT	FUNCTION	FAILURE MODE	POTENTIAL CAUSE	METHOD OF DETECTION	EFFECT ON SYSTEM	EFFECT ON PLANT	REMARKS
7.	Check valve 2-3-644	Prevents blowdown of SG 4 in case of an AFW line break inside containment.	Stuck closed.	Mechanical failure.	Control Room indication via flow indicator FI-3-170A. In addition to SG level instrumentation.	Loss of AFW to SG 4.	None.	AFW flow required to only two SGs.
			Stuck open.	Mechanical failure.	None.	None. Check valve 2-3-645 will prevent blowdown of SG 4.	None.	None*
8.	Check valve 2-3-645	Backup valve to 2-3-644 (same function)	Stuck closed.	Mechanical failure.	Control Room indication via flow indicator FI-3-170A. In addition to SG level instrumentation.	Loss of AFW to SG 4.	None.	AFW flow required to only two SGs.
			Stuck open.	Mechanical failure.	None.	None. Check valve 2-3-644 will prevent blowdown of SG 4.	None.	None*

Table 10.4-4 Failure Mode & Effects Analysis Turbine-Driven (TD) Pump Subsystem (Steam Generator (SG) - Loop No. 4 Typical (Sheet 6 of 7)

TRAIN S FAILURE MODES AND EFFECTS ANALYSIS
Cooldown for Stage 1 of DBE Flood
Main Feed Line Break with LOOP
Large Break LOCA with LOOP
Loss of Normal Feedwater with LOOP
Main Steam Line Break with LOOP

ITEM NO.	COMPONENT	FUNCTION	FAILURE MODE	POTENTIAL CAUSE	METHOD OF DETECTION	EFFECT ON SYSTEM	EFFECT ON PLANT	REMARKS
9.	TDP 2A-S min flow recirc line to CST check valve 3-818.	Prevents backflow from CST to TDP 2A-S discharge piping.	Stuck closed.	Mechanical failure.	TDP overheating as indicated by TI 3-149 (local TI).	Could cause TDP 2A-S to overheat and become inoperable preventing AFW flow to all four SGs (only if flow demand is low).	None.	MDPs 2A-A & 2B-B will provide flow to all four SGs.
			Stuck open.	Mechanical failure.	No method of detection.	No effect on system if TDP 2A-S is running. If TDP 2A-S is not running, system resistance would prevent backflow from occurring.	None.	Will not affect recirc flow to CST.

Table 10.4-4 Failure Mode & Effects Analysis Turbine-Driven (TD) Pump Subsystem (Steam Generator (SG) - Loop No. 4 Typical (Sheet 7 of 7)

TRAIN S FAILURE MODES AND EFFECTS ANALYSIS
Cooldown for Stage 1 of DBE Flood
Main Feed Line Break with LOOP
Large Break LOCA with LOOP
Loss of Normal Feedwater with LOOP
Main Steam Line Break with LOOP

ITEM NO.	COMPONENT	FUNCTION	FAILURE MODE	POTENTIAL CAUSE	METHOD OF DETECTION	EFFECT ON SYSTEM	EFFECT ON PLANT	REMARKS
10. (77) (78)	MOVs FCV-3-179A FCV-3-179B (fail as is)	Isolation between Train B of ERCW and TDP 2A-S suction.	Either fails to open or Either sticks closed.	Control failure Mechanical Failure	Control Room indication via control switches HS-3-179A and HS-3-179B.	Train B ERCW will be blocked from TDP 2A-S suction. Automatic transfer to Train A.	None. Flow from Train A of the ERCW to TD pump suction will allow pump to operate.	
			Both valves fail to open or Both valves stuck closed.	Control or power failure. Mechanical failure	Control Room indication via control switches HS-3-179A and HS-3-179B.	Train B ERCW will be blocked from TDP 2A-S suction. Automatic transfer to Train A.	None. TDP 2A-S would take suction from ERCW Train A; provides flow to SGs 3 and 4.	
11. (71) (72)	MOVs FCV-3-136A FCV-3-136B (fail as is)	Isolation between Train A of ERCW and TDP 2A-S suction.	Either fails to open or Either sticks closed.	Control failure Mechanical Failure	Control Room indication via control switches HS-3-136A and HS-3-136B.	Train A ERCW will be blocked from TDP 2A-S suction. Automatic transfer to Train B.	None. Flow from Train B of the ERCW to TD pump suction will allow pump to operate.	
			Both valves fail to open or Both valves stuck closed.	Control or power failure. Mechanical failure	Control Room indication via control switches HS-3-136A and HS-3-136B.	Train A ERCW will be blocked from TDP 2A-S suction. Automatic transfer to Train B.	None. TDP 2A-S would take suction from ERCW Train B; provides flow to SGs 3 and 4.	

* For the failure of these check valves in the open position, reverse flow from the steam generator to the individual pump casings is prevented by other redundant series check valves.

Table 10.4-5 Failure Mode & Effects Analysis Motor Driven (MD) Pump Subsystem (Steam Generator (SG) Loop No. 4 - Typical) (Sheet 1 of 8)

Train B Failure Modes and Effects Analysis
Cooldown for Stage 1 of a DBE Flood
Main Feed Line Break with LOOP
Large Break LOCA with LOOP
Loss of Normal Feedwater with LOOP
Main Steam Line Break with LOOP

ITEM NO.	COMPONENT	FUNCTION	FAILURE MODE	POTENTIAL CAUSE	METHOD OF DETECTION	EFFECT ON SYSTEM	EFFECT ON PLANT	REMARKS
1.	Check valve 2-3-806	Isolates the safety-related suction line for MDP 2B-B from its non-safety water source.	Stuck closed.	Mechanical failure.	Control Room indication via pressure gage PDI-3-132A.	Loss of flow from MDP 2A-A.	None.	TD 2A-S provides flow to SGs 3 & 4.
			Stuck open.	Mechanical failure.	Control Room indication via pressure gage PDI-3-132A	Reduction or loss of flow if MDP 2B-B flow is from the ERCW.	None.	TD 2A-S provides flow to SGs 3 & 4.
2. 3.	MOVs FCV-3-126A FCV-3-126B. (fail as is)	Isolation valves between ERCW and MDP 2B-B suction.	Either fails to open or Either stuck closed.	Control failure. Mechanical failure.	Control Room indication via control switches HS-3-126A & HS-3-126B.	Loss of AFW flow to SGs 3 & 4.	None.	TDP 2A-S provides flows to SGs 3 & 4.
			Both valves fail to open or Both valves stuck closed.	Control or power failure. Mechanical failure.	Control Room indication via control switches HS-3-126A & HS-3-126B.	Loss of AFW flow to SGs 3 & 4.	None.	TDP 2A-S provides flows to SGs 3 & 4.

Table 10.4-5 Failure Mode & Effects Analysis Motor Driven (MD) Pump Subsystem (Steam Generator (SG) Loop No. 4 - Typical) (Sheet 2 of 8)

Train B Failure Modes and Effects Analysis
Cooldown for Stage 1 of a DBE Flood
Main Feed Line Break with LOOP
Large Break LOCA with LOOP
Loss of Normal Feedwater with LOOP
Main Steam Line Break with LOOP

ITEM NO.	COMPONENT	FUNCTION	FAILURE MODE	POTENTIAL CAUSE	METHOD OF DETECTION	EFFECT ON SYSTEM	EFFECT ON PLANT	REMARKS
4.	MDP 2B-B	Provides Feedwater flow to SGs 3 & 4.	Fails to start.	Mechanical failure.	Control Room indication via control switch HS-3-128A & pressure differential indicator PDI-3-132A.	Loss of Train B.	None.	TDP 2A-S provides flow to SGs 3 & 4.
			Seal fails.	Mechanical failure.	Control Room indication reduced flow via FI-3-147B & FI-3-170A.	MDP 2B-B capability is diminished.	None.	TDP 2A-S provides flow to SGs 3 & 4.
5.	Condensate Storage Tank (For details see this heading in Table 10-4-4, Sheet 4).							
6.	Check Valve 2-3-821	None	N/A	N/A	N/A	N/A	None	Valve Internals have been removed.

Table 10.4-5 Failure Mode & Effects Analysis Motor Driven (MD) Pump Subsystem (Steam Generator (SG) Loop No. 4 - Typical) (Sheet 3 of 8)

Train B Failure Modes and Effects Analysis
Cooldown for Stage 1 of a DBE Flood
Main Feed Line Break with LOOP
Large Break LOCA with LOOP
Loss of Normal Feedwater with LOOP
Main Steam Line Break with LOOP

ITEM NO.	COMPONENT	FUNCTION	FAILURE MODE	POTENTIAL CAUSE	METHOD OF DETECTION	EFFECT ON SYSTEM	EFFECT ON PLANT	REMARKS
7.	AOV PCV-3-132 (fails in closed position) spring to close; air to open.	Prevents MDP 2B-B runout by controlling pump discharge pressure.	Fails to open.	Control failure.	Control Room indication via flow indicators FI-147B, & -170A.	Loss of MDP 2B-B.	None.	TDP 2A-S provides flow to SGs 3 & 4.
			Fails to close.	Control failure.	Control Room indication via flow indicators FI-147B, & -170A. Also, pressure differential indicator PDI-3-132A.	Possibility of MDP 2B-B running out and eventual loss of pump.	None.	TDP 2A-S provides flow to SGs 3 & 4.
			Stuck open.	Mechanical failure.	Control Room indication via flow indicators FI-147B, & -170A. Also, pressure differential indicator PDI-3-132A.	Possibility of MDP 2B-B running out and eventual loss of pump.	None.	TDP 2A-S provides flow to SGs 3 & 4.
			Stuck closed.	Mechanical failure.	Indication via flow indicators FI-147B, & -170A.	Loss of MDP 2B-B.	None.	TDP 2A-S provides flow to SGs 3 & 4.

Table 10.4-5 Failure Mode & Effects Analysis Motor Driven (MD) Pump Subsystem (Steam Generator (SG) Loop No. 4 - Typical) (Sheet 4 of 8)

Train B Failure Modes and Effects Analysis
Cooldown for Stage 1 of a DBE Flood
Main Feed Line Break with LOOP
Large Break LOCA with LOOP
Loss of Normal Feedwater with LOOP
Main Steam Line Break with LOOP

ITEM NO.	COMPONENT	FUNCTION	FAILURE MODE	POTENTIAL CAUSE	METHOD OF DETECTION	EFFECT ON SYSTEM	EFFECT ON PLANT	REMARKS
8.	AOV LCV-3-171 (fails in open position) spring to open; air to close.	Regulates AFW flow to SG 4 when pressure is greater than setpoint for pressure switch PS-3-171 (4" level control valve).	Fails to open.	Control failure.	Control Room indication via control switch HS-3-171A.	Loss of AFW flow to SG 4.	None.	TDP 2A-S provides flow to SG 4.
			Fails to close.	Control failure.	Control Room indication via control switch HS-3-171A.	AFW flow to SG 4 unregulated. Diminished flow to SG 3.	None.	Operator action required to isolate MDP 2B-B to prevent SG 4 overfill.
			Stuck open.	Mechanical failure.	Control Room indication of SG 4. High level via XA-55-3C-63B.	AFW flow to SG 4 unregulated. Diminished flow to SG 3.	None.	Operator action required to isolate MDP 2B-B to prevent SG 4 overfill.
			Stuck closed.	Mechanical failure.	Control Room indication via control switch HS-3-171A.	Loss of AFW flow to SG 4.	None.	TDP 2A-S provides flow to SG 4.

Table 10.4-5 Failure Mode & Effects Analysis Motor Driven (MD) Pump Subsystem (Steam Generator (SG) Loop No. 4 - Typical) (Sheet 5 of 8)

Train B Failure Modes and Effects Analysis
Cooldown for Stage 1 of a DBE Flood
Main Feed Line Break with LOOP
Large Break LOCA with LOOP
Loss of Normal Feedwater with LOOP
Main Steam Line Break with LOOP

ITEM NO.	COMPONENT	FUNCTION	FAILURE MODE	POTENTIAL CAUSE	METHOD OF DETECTION	EFFECT ON SYSTEM	EFFECT ON PLANT	REMARKS
9.	AOV LCV-3-171A (fails in closed position) spring to close air to open.	Regulates AFW flow to SG 4 (2" level control bypass valve).	Fails to open.	Control failure.	Control Room indication via control switch HS-3-171A.	Loss of AFW flow to SG 4 through LCV-3-171A.	None.	TDP 2A-S provides flow to SG 4.
			Fails to close.	Control failure.	Control Room indication via control switch HS-3-171A.	Diminished AFW flow to SG 3.	None.	Operator action required to isolate MDP 2B-B to prevent SG 4 overfill.
			Stuck open.	Mechanical failure.	Control Room indication of SG 4. High level XA-55-3C-63B.	Diminished AFW flow to SG 3.	None.	Operator action required to isolate MDP 2B-B to prevent SG 4 overfill.
			Stuck closed.	Mechanical failure.	Control Room indication via control switch HS-3-171A.	Loss of AFW flow to SG 4 through LCV-3-171A.	None.	TDP 2A-S provides flow to SG 4.

Table 10.4-5 Failure Mode & Effects Analysis Motor Driven (MD) Pump Subsystem (Steam Generator (SG) Loop No. 4 - Typical) (Sheet 6 of 8)

Train B Failure Modes and Effects Analysis

Cooldown for Stage 1 of a DBE Flood
Main Feed Line Break with LOOP
Large Break LOCA with LOOP
Loss of Normal Feedwater with LOOP
Main Steam Line Break with LOOP

ITEM NO.	COMPONENT	FUNCTION	FAILURE MODE	POTENTIAL CAUSE	METHOD OF DETECTION	EFFECT ON SYSTEM	EFFECT ON PLANT	REMARKS
10.	Emergency power to Train B.	Provide AC power to MDP 2B-B & all MOVs in Train B.	Fails.	Diesel Generator Shutdown Board 2B-B failure.	Control Room indication.	MDP 2B-B is lost.	None.	Train A would be available to service SGs 1 & 2. This is acceptable condition since only 2 SGs are required to be operational for any credible accident. TDAFW pump is also available.
11.	Check valve 2-3-833.	Prevents reverse flow in 4" AFW line to SG 4.	Stuck open.	Mechanical failure.	None.	Not a problem if MDP 2B-B is running, if not LCV-3-171 and -171A will prevent reverse flow thru pump discharge piping.	None.	None*.
			Stuck closed.	Mechanical failure.	Control Room indication via flow indicator FI-3- -170A.	Loss of AFW to SG 4.	None.	TDP 2A-S provides flow to SG 4.

Table 10.4-5 Failure Mode & Effects Analysis Motor Driven (MD) Pump Subsystem (Steam Generator (SG) Loop No. 4 - Typical) (Sheet 7 of 8)

Train B Failure Modes and Effects Analysis

Cooldown for Stage 1 of a DBE Flood
Main Feed Line Break with LOOP
Large Break LOCA with LOOP

Loss of Normal Feedwater with LOOP
Main Steam Line Break with LOOP

ITEM NO.	COMPONENT	FUNCTION	FAILURE MODE	POTENTIAL CAUSE	METHOD OF DETECTION	EFFECT ON SYSTEM	EFFECT ON PLANT	REMARKS
12.	MDP 2B-B min flow recirc line to CST check valve 3-815.	Prevents backflow from CST to MDP 2B-B discharge piping.	Stuck closed.	Mechanical failure.	Pump/Motor high temp as indicated by TI-3-146 (local TI) or EI-3-129A (hi amps). No method of detection.	MDP 2B-B to overheat and become inoperative preventing AFW flow to SGs 3 & 4 (only if flow demand is low).	None.	TDP 2A-S will provide flow to SGs 3 & 4.
			Stuck open.	Mechanical failure.		No affect on system if MDP 2B-B is running. If MDP 2B-B is not running, system resistance would prvent backflow from occuring.	None.	None.
13.	Check valve 2-3-644 (For details, see this heading in Table 10.4-4, Sheet 5.)							

Table 10.4-5 Failure Mode & Effects Analysis Motor Driven (MD) Pump Subsystem (Steam Generator (SG) Loop No. 4 - Typical) (Sheet 8 of 8)

Train B Failure Modes and Effects Analysis

Cooldown for Stage 1 of a DBE Flood
Main Feed Line Break with LOOP
Large Break LOCA with LOOP
Loss of Normal Feedwater with LOOP
Main Steam Line Break with LOOP

ITEM NO.	COMPONENT	FUNCTION	FAILURE MODE	POTENTIAL CAUSE	METHOD OF DETECTION	EFFECT ON SYSTEM	EFFECT ON PLANT	REMARKS
14.	Check valve 2-3-645 (For details, see this heading in Table 10.4-4, Sheet 5.)							
15.	AFW Pump 2B-B Recirc. Flow control valve FCV-3-359	Prevents flow being diverted during an accident from the SGs 3 & 4.	Stuck Open	Mechanical failure	Control Room indication via flow indicators FI-3-147B and -170A and position indicating lights associated with HS-3-359	Loss of train B.	None. TDP 2A-S will provide flow to SGs 3 and 4.	None.

* For the failure of these check valves in the open position, reverse flow from the steam generator to the individual pump casings is prevented by other redundant series check valves.

THIS PAGE INTENTIONALLY BLANK

Table 10.4-6 Auxiliary Feedwater Flow to Steam Generators Following an Accident/Transient - GPM (Sheet 1 of 3)

ITEM NO.	ACCIDENT	AFW PUMPS REQ'D	MIN REQ'D FLOW	MAX FLOW ALLOWED (MASS & ENERGY RELEASES) NOTE 1	NO OF SG'S REQ'D OR (FAULTED)	SG'S AVAILABLE OR REQUIRED
1	LONF	2 MD or TD	820	NA	ALL 4 SG'S ARE AVAIL ANY 2 SG'S ARE REQ'D	
2	LOOP	ANY 1 PUMP	410		ALL 4 SG'S ARE AVAIL ANY 2 SG'S ARE REQ'D	
3	MS SUDDEN DEPRESSURIZATION					
3.1	MS S DEPRESS SHORT TERM	NONE	N/A	2840	ALL 4 SG's ARE AVAIL ANY 2 SG's ARE REQ'D	
3.2	MS S DEPRESS LONG TERM	ANY 2	820	NA	ALL 4 SG's ARE AVAIL ANY 2 SG's ARE REQ'D	
4	MAIN STEAM LINE BREAK (MSLB) WITH CONCURRENT LOOP					
4.1	MSLB-SHORT TERM	NONE	NA	2840	(1 FAULTED) NOT APP	
4.2	MSLB-LONG TERM	ANY 1	410	NA	ANY 2 SG's ARE REQ'D ANY 3 SG's ARE AVAIL	
5	MAIN FEED LINE BREAK (MFLB) WITH CONCURRENT LOOP					
5.1	MFLB-SHORT TERM	NONE	NA	2840	ALL FLOW FAULTED TO SG	
5.2	MFLB-LONG TERM	ANY 1 MDP	410	NA	ANY 2 SG's ARE REQ'D ANY 3 SG's ARE AVAIL	
5.3	MFLB-LONG TERM	TDP	720	NA		

Table 10.4-6 Auxiliary Feedwater Flow to Steam Generators Following an Accident/Transient - GPM (Sheet 2 of 3)

ITEM NO.	ACCIDENT	AFW PUMPS REQ'D	MIN REQ'D FLOW	MAX FLOW ALLOWED (MASS & ENERGY RELEASES) NOTE 1	NO OF SG'S REQ'D OR (FAULTED)	SG'S AVAILABLE OR REQUIRED
6	LOCA					
6.1	LARGE BREAK LOCA	ANY 1	Note 2	NA	FAULTED SG HAS TUBE LEAKS	ALL 4 SG's ARE AVAIL
6.2	SMALL BREAK LOCA	1 MD + TD	1050	NA	ANY 2 SG's ARE REQ'D	ALL 4 SG'S ARE AVAIL
6.3	MSLB MASS & ENERGY (M&E) RELEASE CASES FOR BREAK INSIDE CONTAINMENT SHORT TERM					
6.4	MSLB M&E IN CASE 1	NONE	NA	2250	ALL FLOW FAULTED TO SG	
6.5	MSLB M&E CASES 2-4	NONE	NA	1500	ALL FLOW FAULTED TO SG	
6.6	MSLB M&E CASE 5	NONE	NA	2250	ALL FLOW FAULTED TO SG	
7	MSLB M&E CASES 6-8	NONE	NA	1500	ALL FLOW FAULTED TO SG	
8	MSLB M&E CASE 9	NONE	NA	2250	ALL FLOW FAULTED TO SG	
9	MSLB M&E CASES 10-13	NONE	NA	2040	ALL FLOW FAULTED TO SG	
10	MSLB OUTSIDE CONT	NONE	NA	SEE NOTE 3	ANY 2 SG'S ARE REQUIRED	

Table 10.4-6 Auxiliary Feedwater Flow to Steam Generators Following an Accident/Transient - GPM (Sheet 3 of 3)

ITEM NO.	ACCIDENT	AFW PUMPS REQ'D	MIN REQ'D FLOW	MAX FLOW ALLOWED (MASS & ENERGY RELEASES) NOTE 1	NO OF SG'S REQ'D OR (FAULTED)	SG'S AVAILABLE OR REQUIRED
11	TOTAL LOSS OF ALL AC POWER (ONLY TDP AVAIL.)	TDP	410	NA	ANY 2 SG'S ARE REQUIRED	ALL SG'S ARE AVAIL

NOTES:

1. Maximum allowed flow limit values are dictated by containment pressure and temperature requirements except for Item 10 which is governed by SG pressures.

2. For LOCA (Large Breaks), the only AFW flow requirement is to keep the SG's filled above the lower range tap to contain RCS leakage through any failed SG tubes.

3. Minimum auxiliary feedwater flowrates were conservatively assumed. The AFW flowrates are based upon the minimum delivered flow assuming a failure of the highest capacity auxiliary feedwater pump. Credit was taken for increases in AFW flow resulting from a decrease in the steam generator pressure both before and after steamline isolation. A 60-second delay from the time when the setpoint is reached to the time when flow is delivered was assumed. Minimizing AFW flow and delaying AFW flow initiation results in less inventory to the steam generator and, therefore, would serve to minimize steam generator water level and expedite reaching tube bundle uncovery conditions. The auxiliary feedwater flows assumed in the safety analysis supporting the steam generator replacement are documented in TVA Letter W-7460 (NAR), Watts Bar Nuclear Plant (WBN) - Auxiliary Feedwater Input Parameters for the Non-LOCA Analyses," July 9, 1996.

4. Cases are defined in Section 6.2.1.3.10 and the associated WAT-D letters.

THIS PAGE INTENTIONALLY BLANK

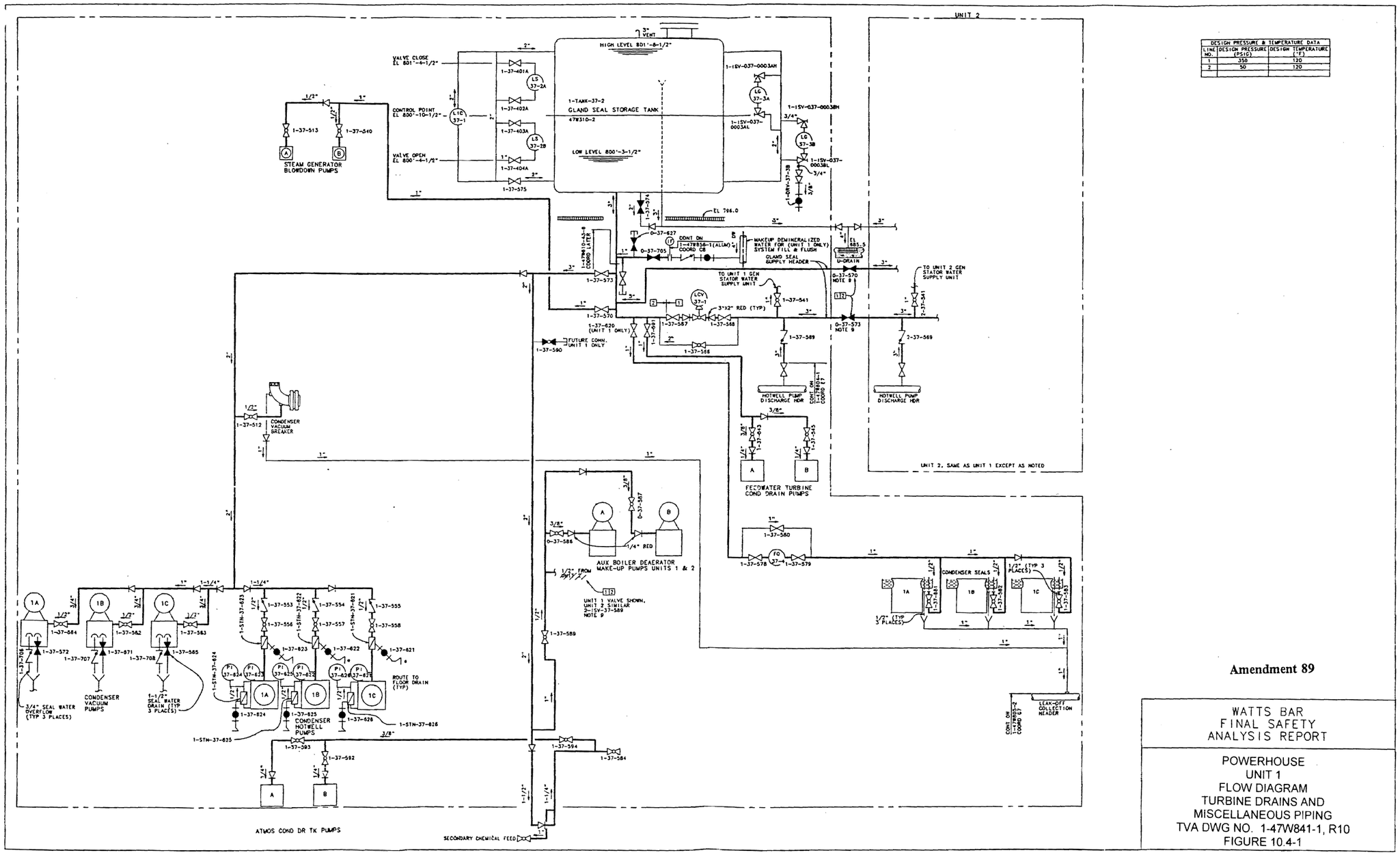

Figure 10.4-1 Powerhouse Unit 1 Flow Diagram Turbine Drains and Miscellaneous Piping

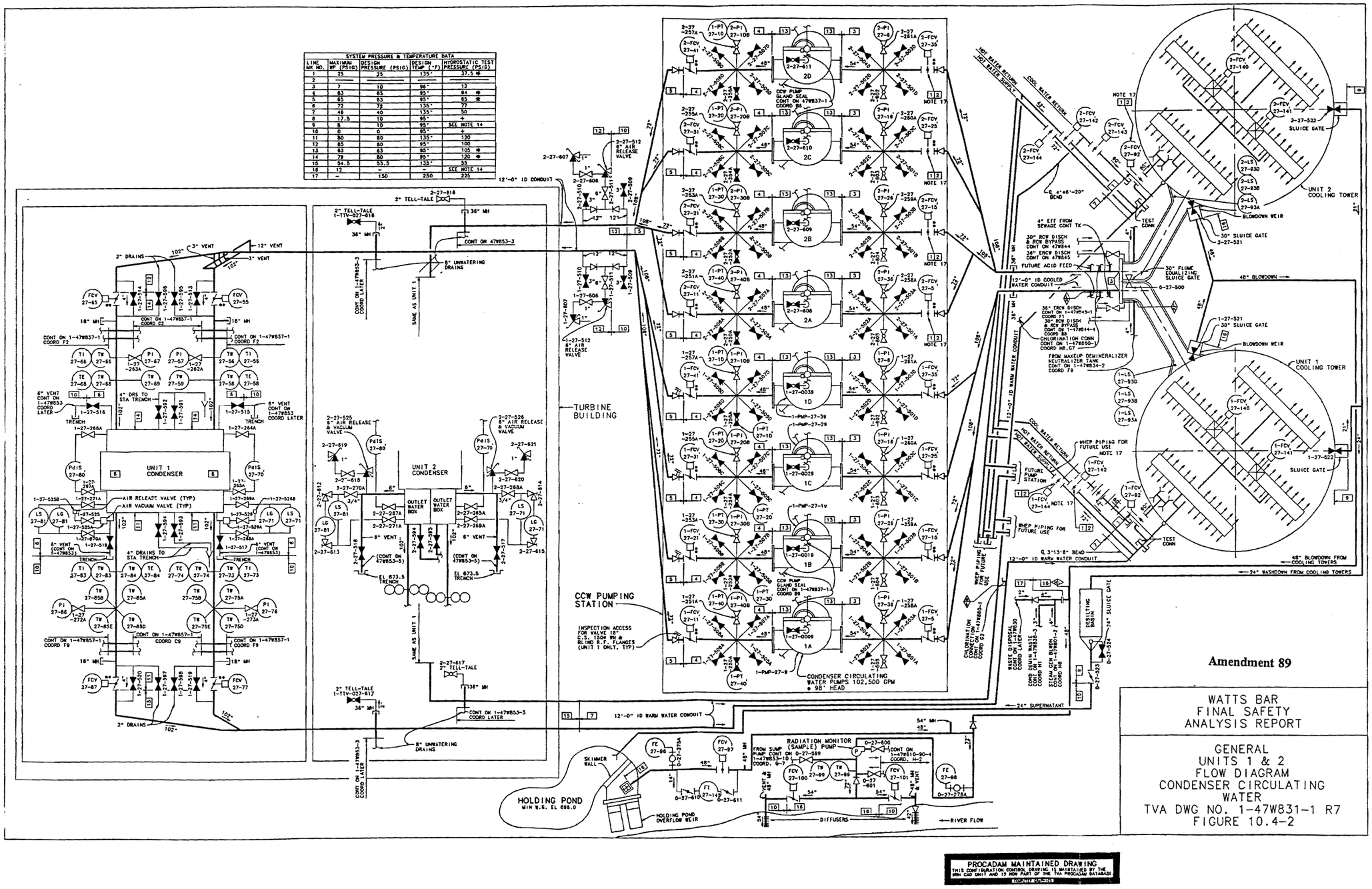

Figure 10.4-2 General Units 1 & 2 Flow Diagram Condenser Circulating Water

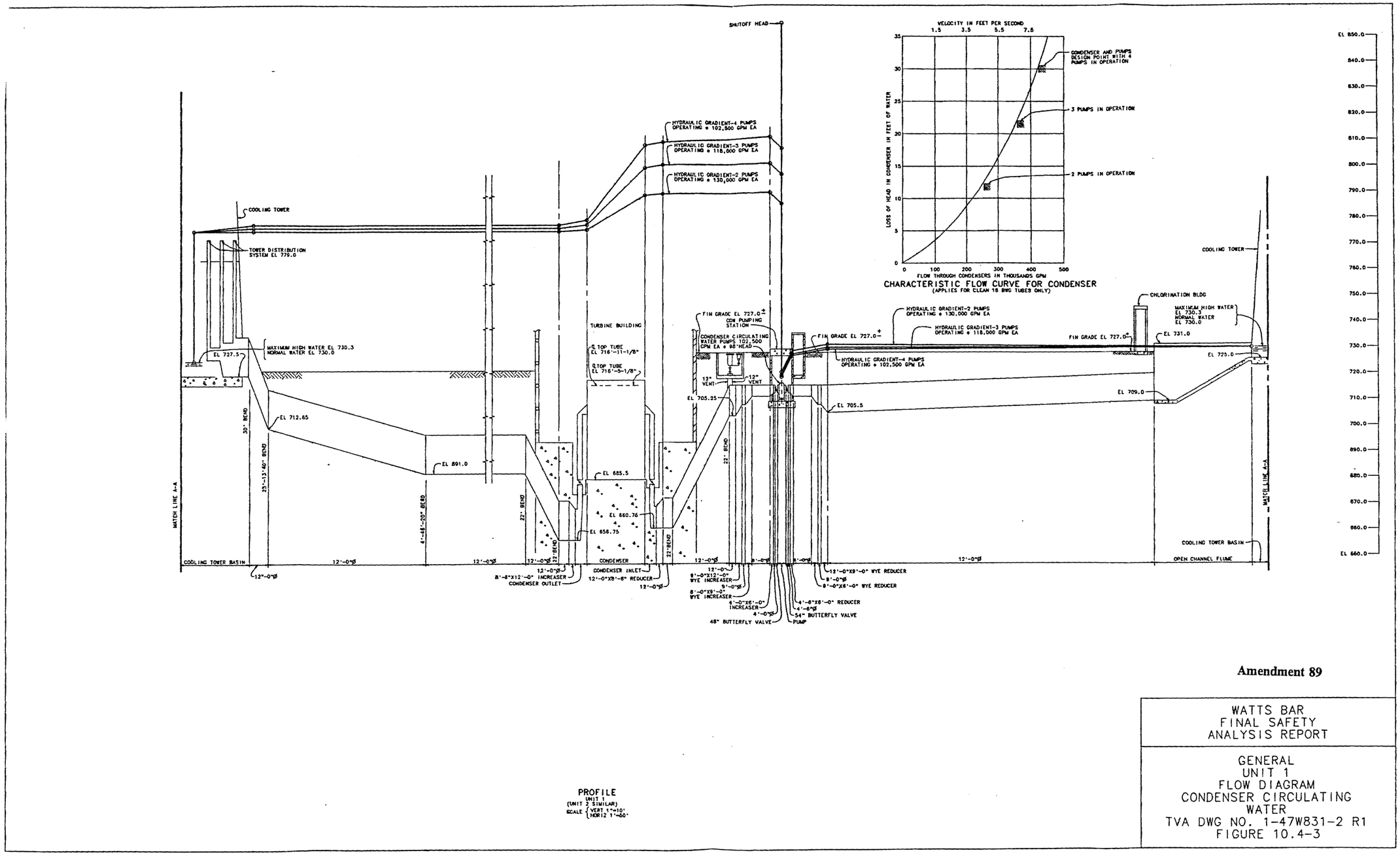

Figure 10.4-3 General Unit 1 Flow Diagram Condenser Circulating Water

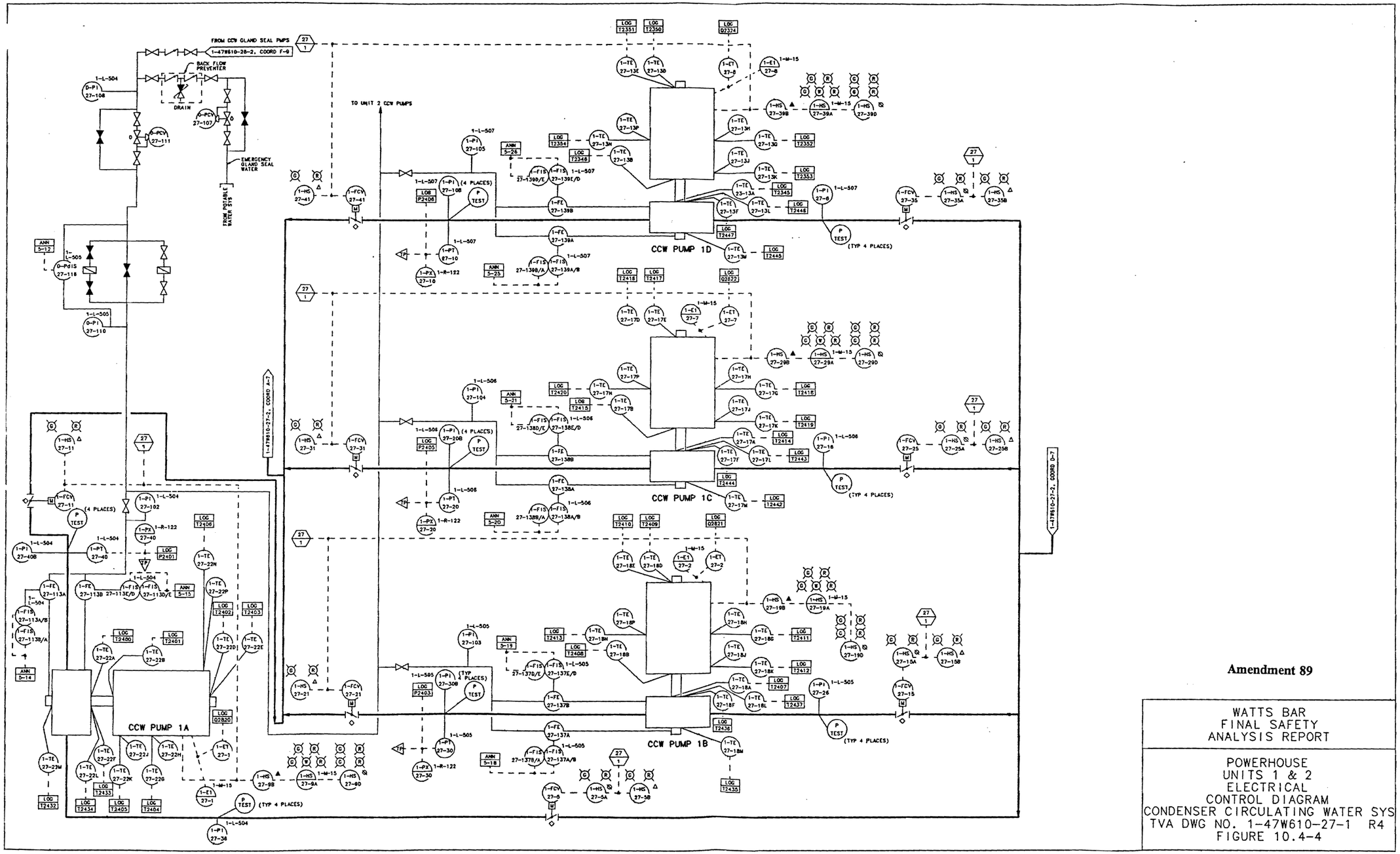

Amendment 89

WATTS BAR
FINAL SAFETY
ANALYSIS REPORT

POWERHOUSE
UNITS 1 & 2
ELECTRICAL
CONTROL DIAGRAM
CONDENSER CIRCULATING WATER SYS
TVA DWG NO. 1-47W610-27-1 R4
FIGURE 10.4-4

PROCADAM MAINTAINED DRAWING
THIS CONFIGURATION CONTROL DRAWING IS MAINTAINED BY THE WBN CAD UNIT AND IS NOW PART OF THE TVA PROCADAM DATABASE

Figure 10.4-4 Powerhouse Units 1 & 2 Electrical Control Diagram Condenser Circulating Water System

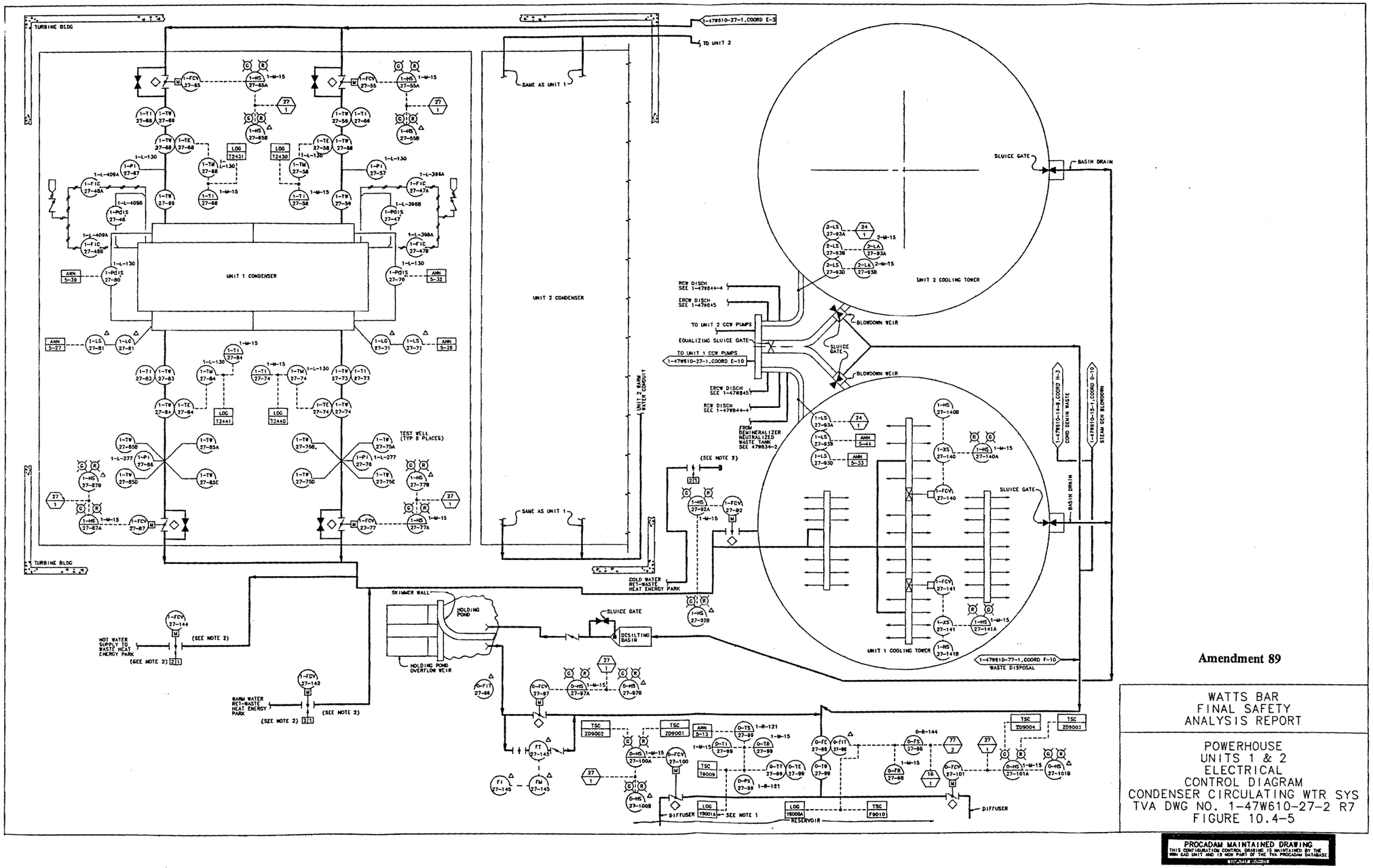

Figure 10.4-5 Powerhouse Units 1 & 2 Electrical Control Diagram Condenser Circulating Water System

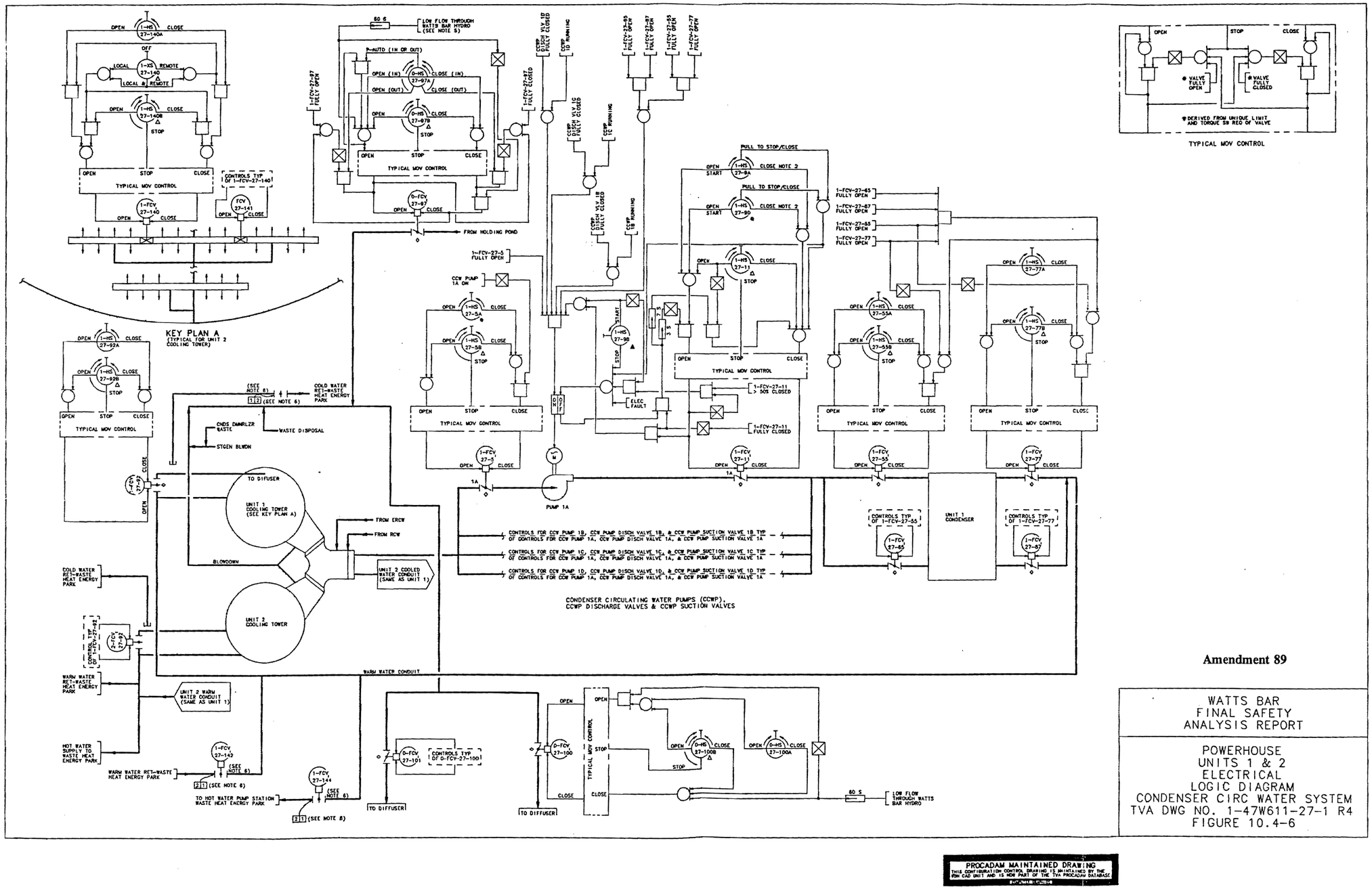

Figure 10.4-6 Powerhouse Units 1 & 2 Electrical Logic Diagram Condenser Circulating Water System

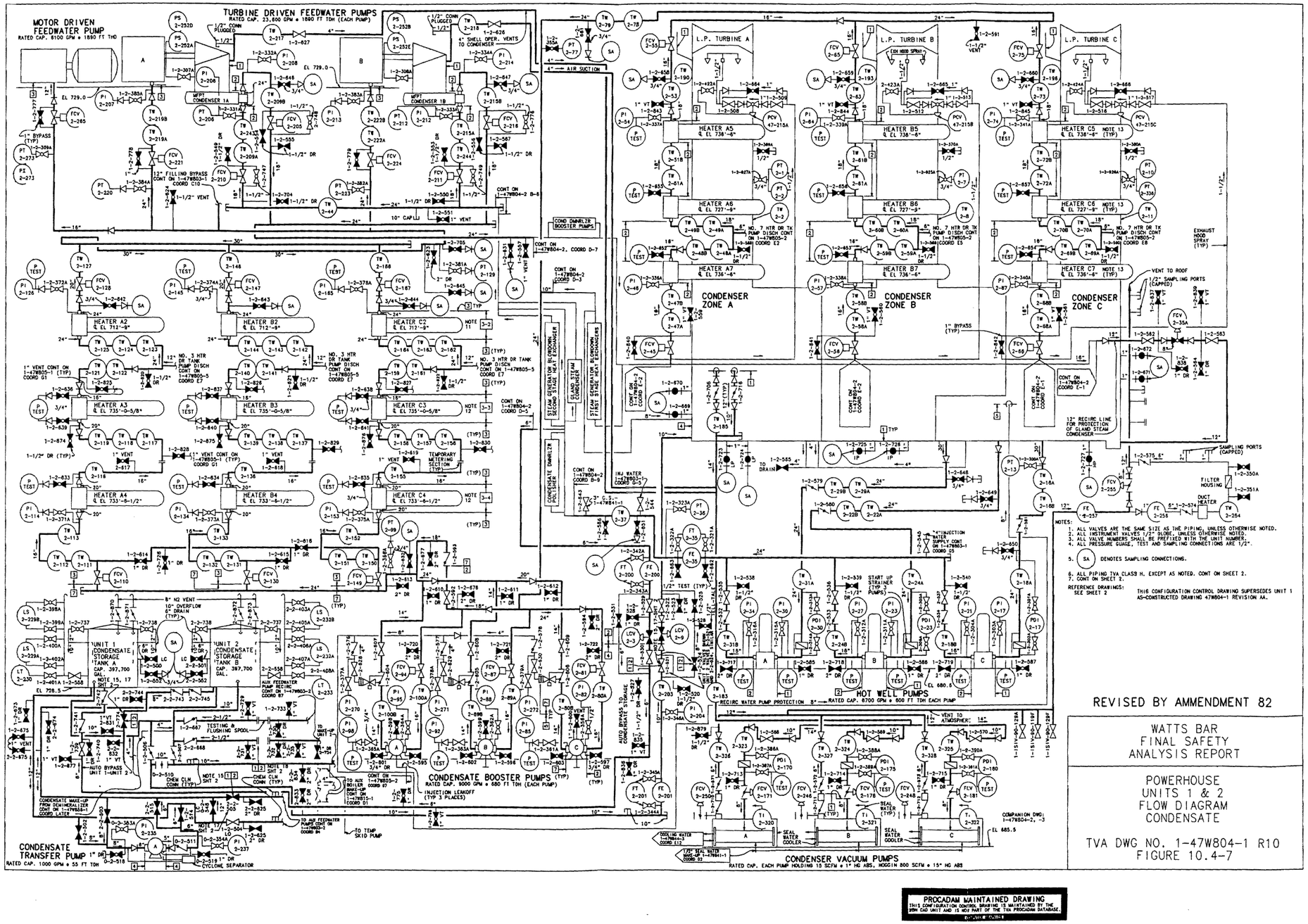

Figure 10.4-7 Powerhouse Units 1 & 2 Flow Diagram Condensate

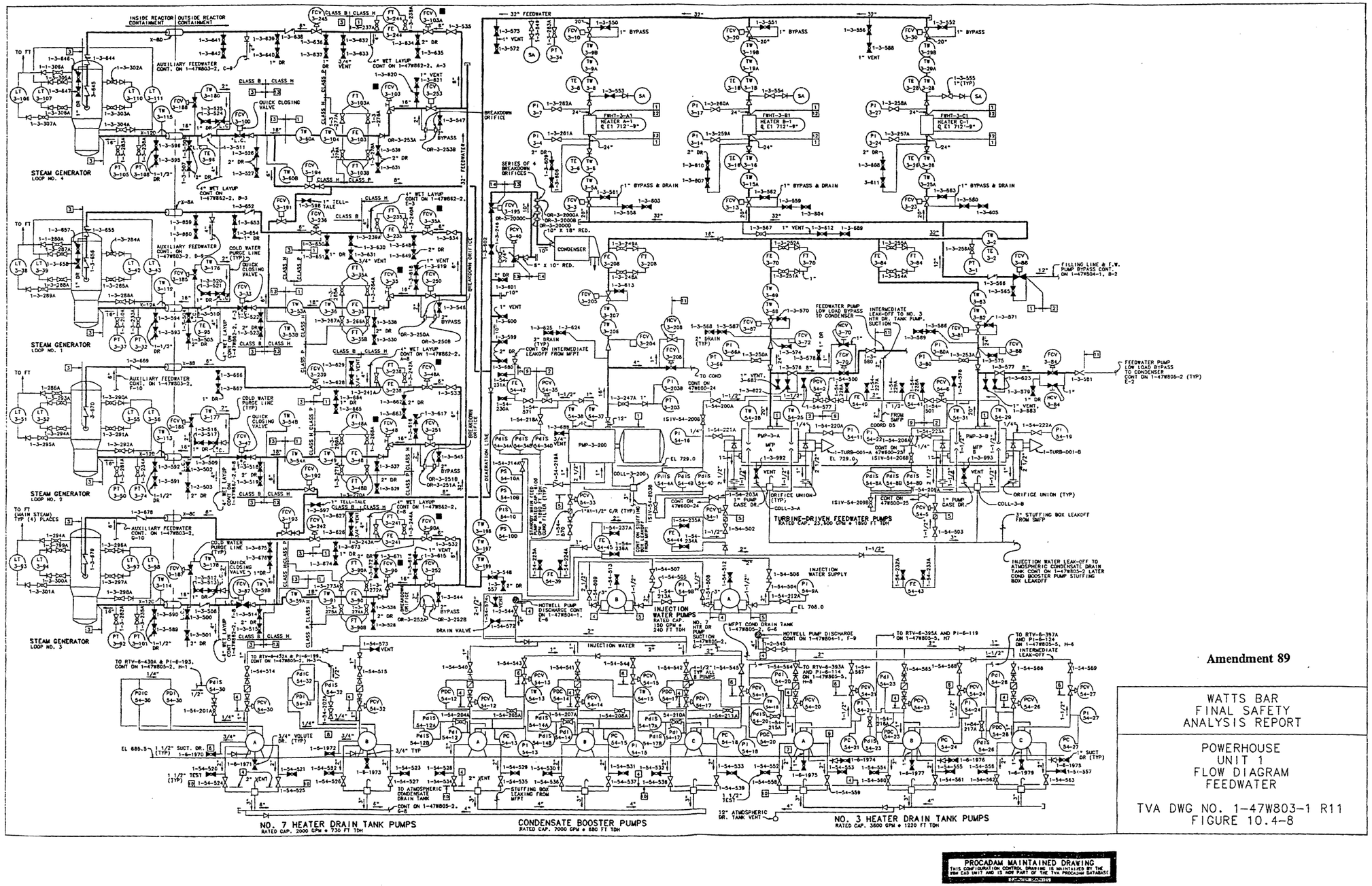

Figure 10.4-8 Powerhouse Unit 1 Flow Diagram Feedwater

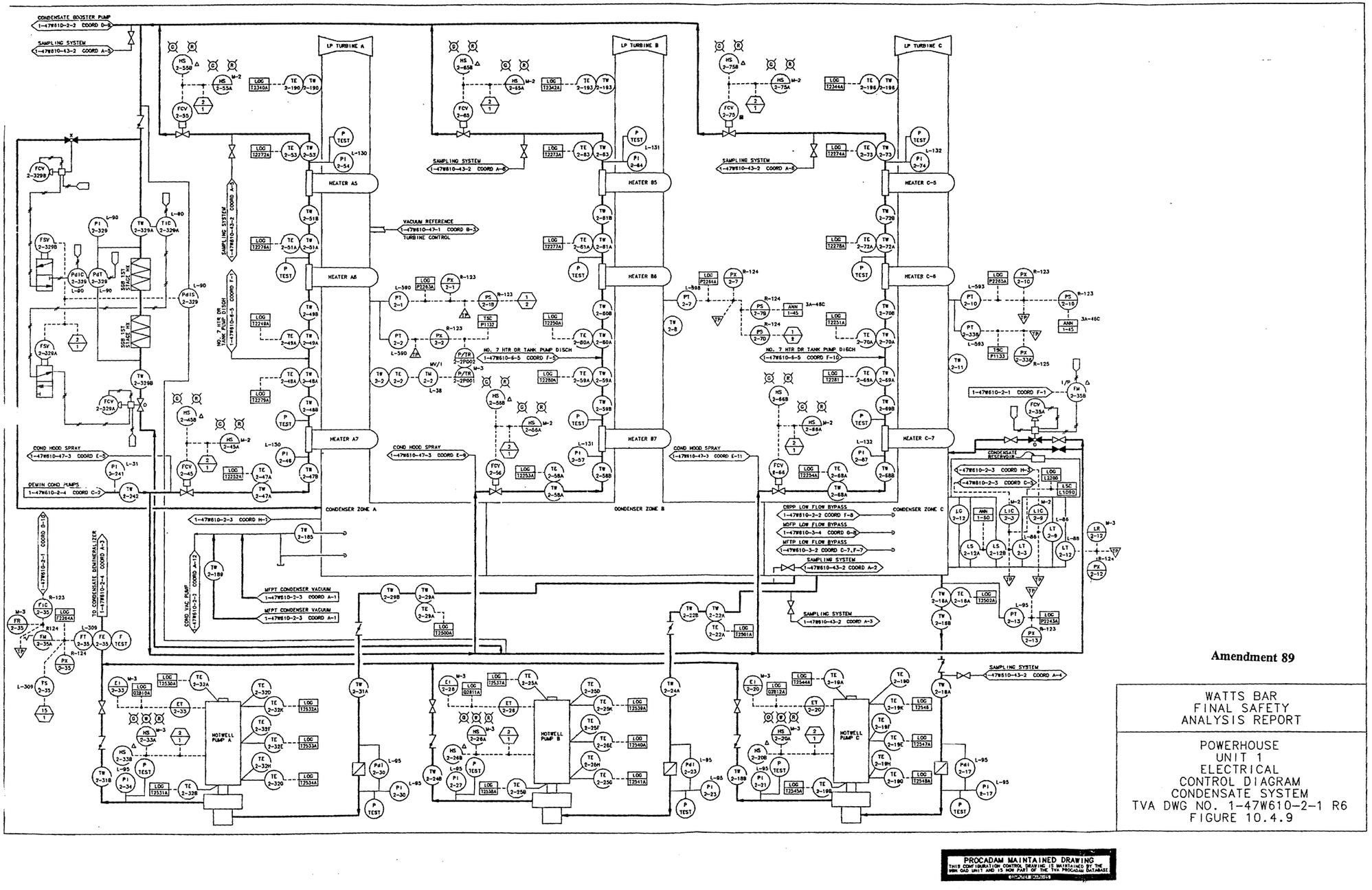

Figure 10.4-9 Powerhouse Unit 1 Electrical Control Diagram Condensate System

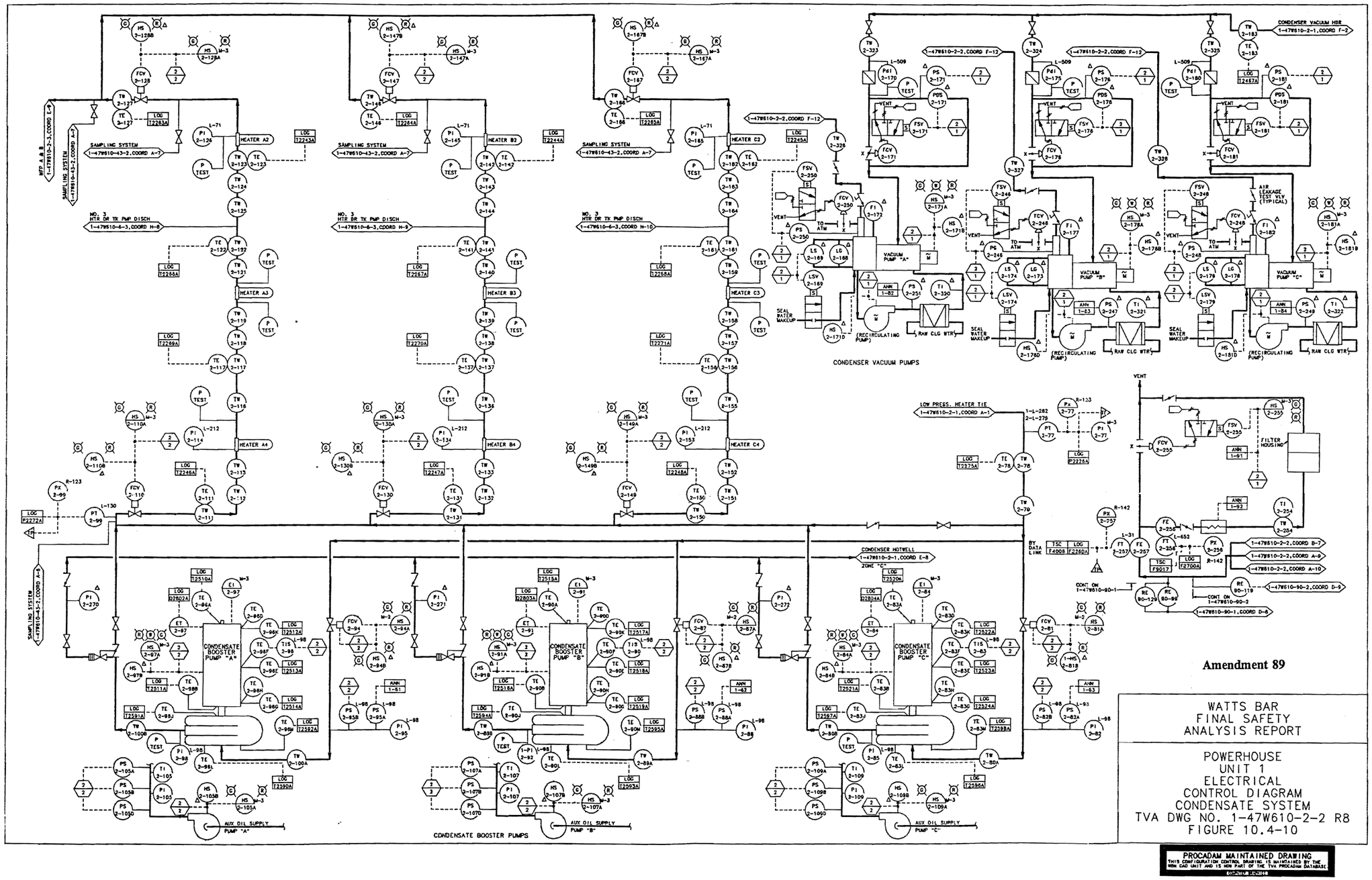

Figure 10.4-10 Powerhouse Unit 1 Electrical Control Diagram Condensate System

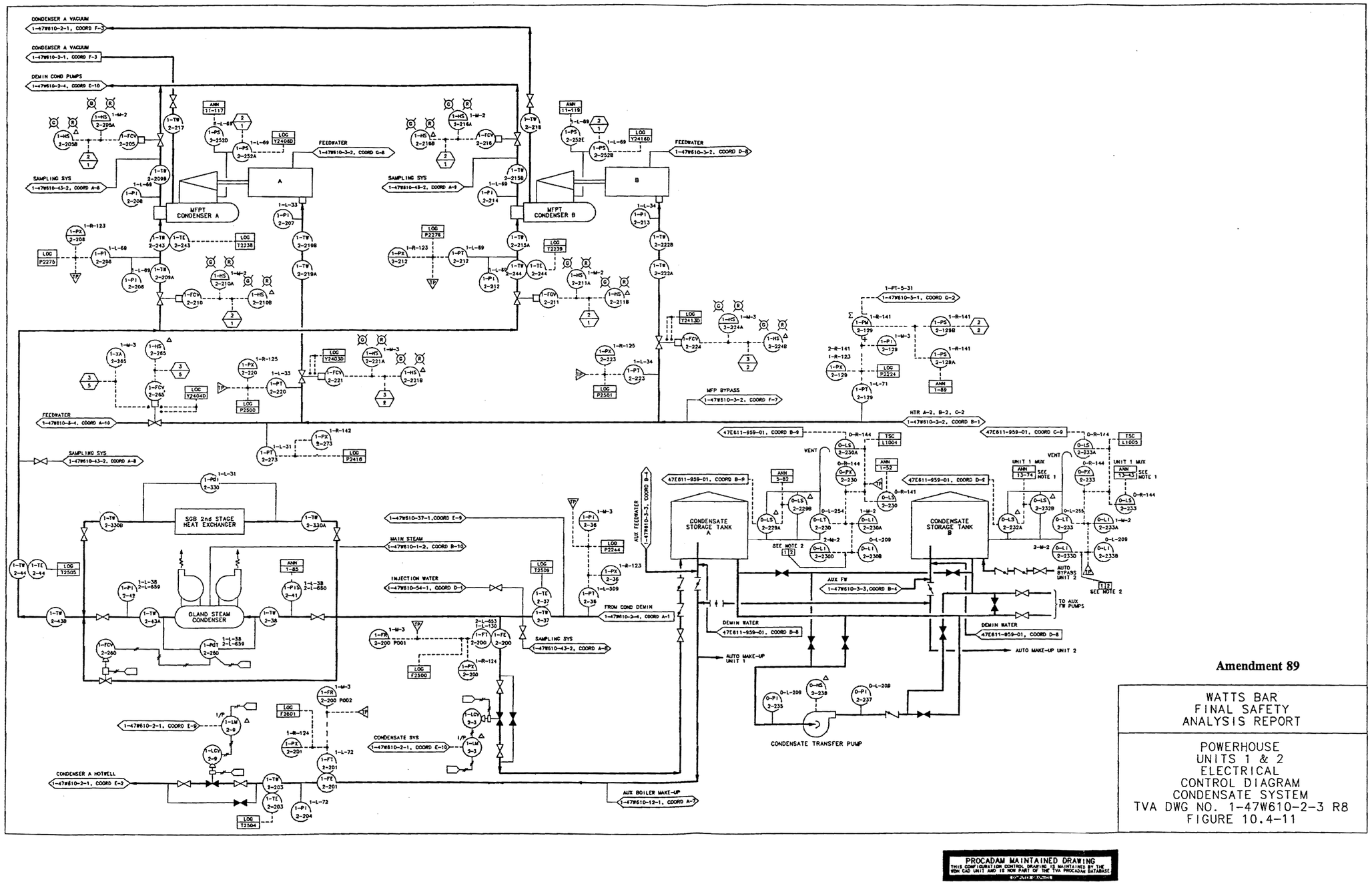

Figure 10.4-11 Powerhouse Units 1 & 2 Electrical Control Diagram Condensate System

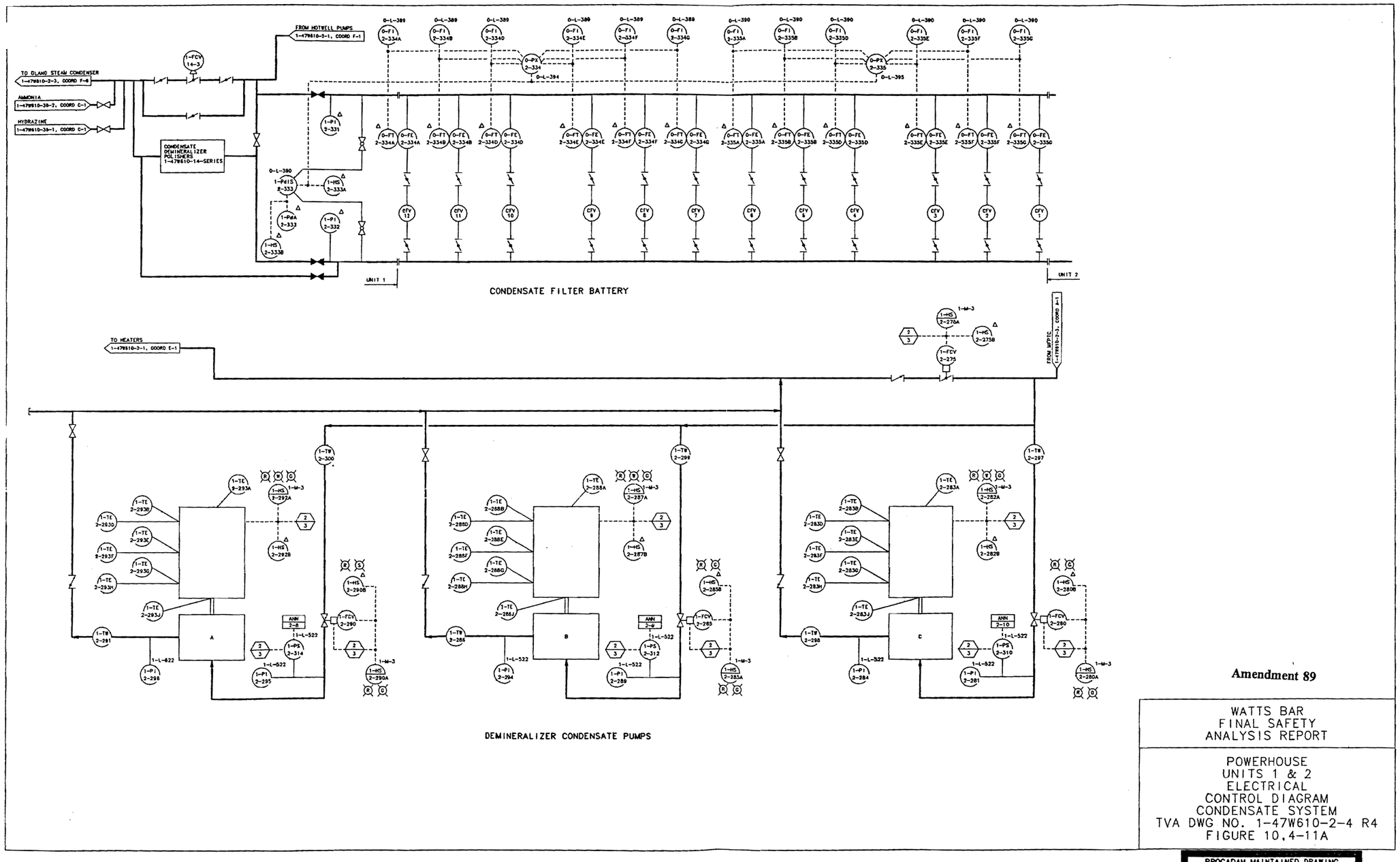

Figure 10.4-11a Powerhouse Units 1 & 2 Electrical Control Diagram Condensate System

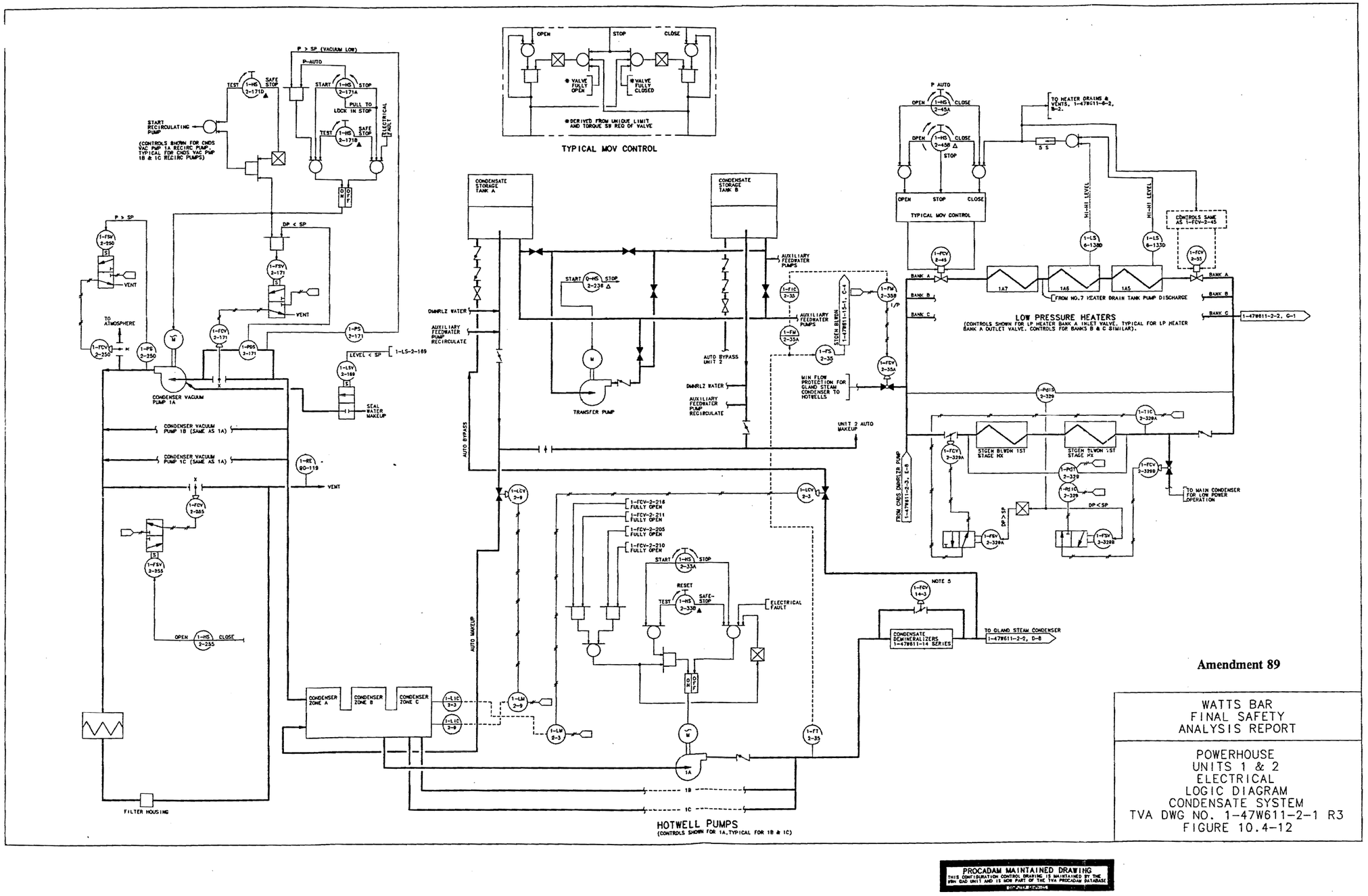

Figure 10.4-12 Powerhouse Units 1 & 2 Electrical Logic Diagram Condensate System

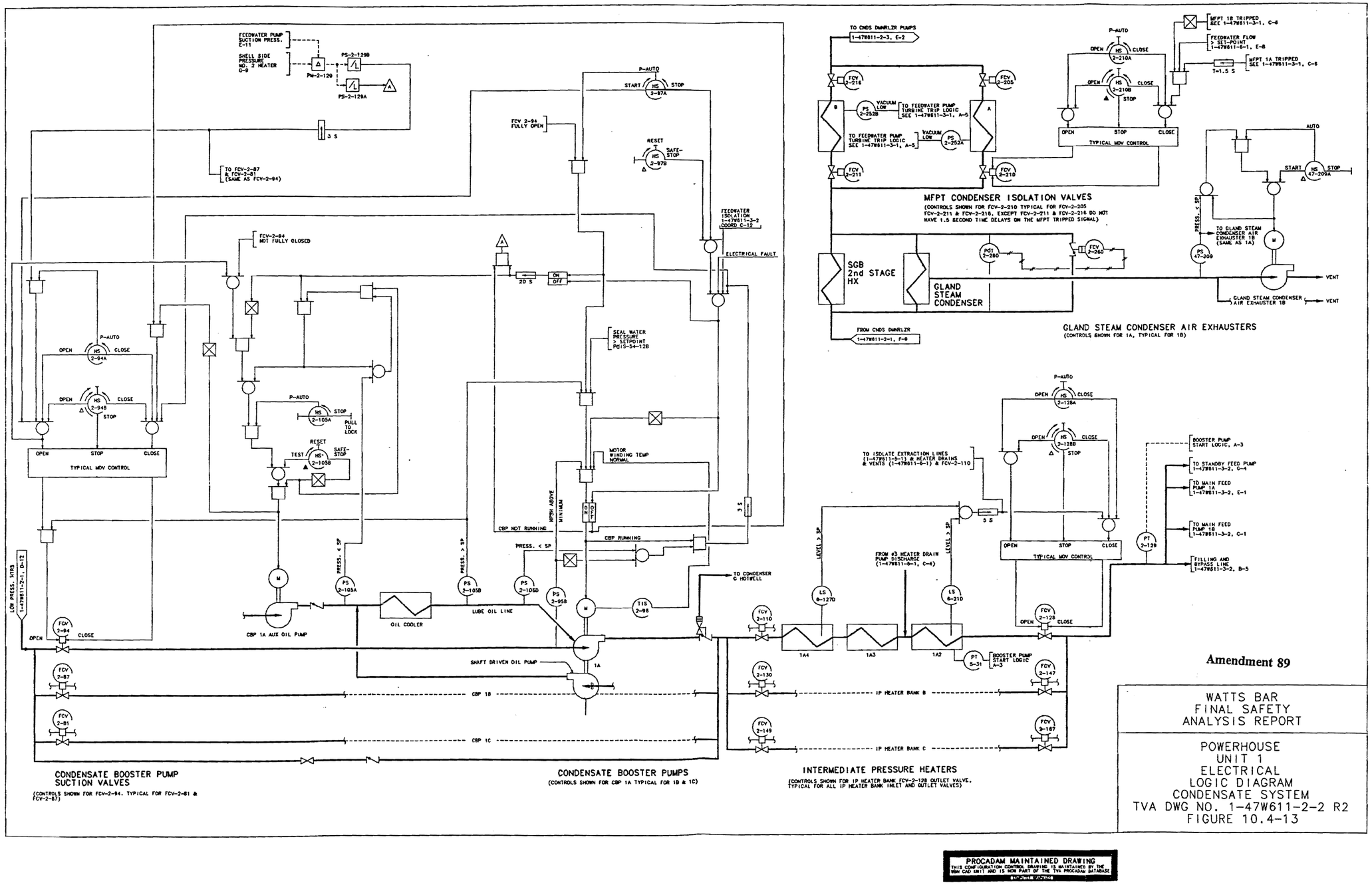

Figure 10.4-13 Powerhouse Unit 1 Electrical Logic Control Diagram Condensate System

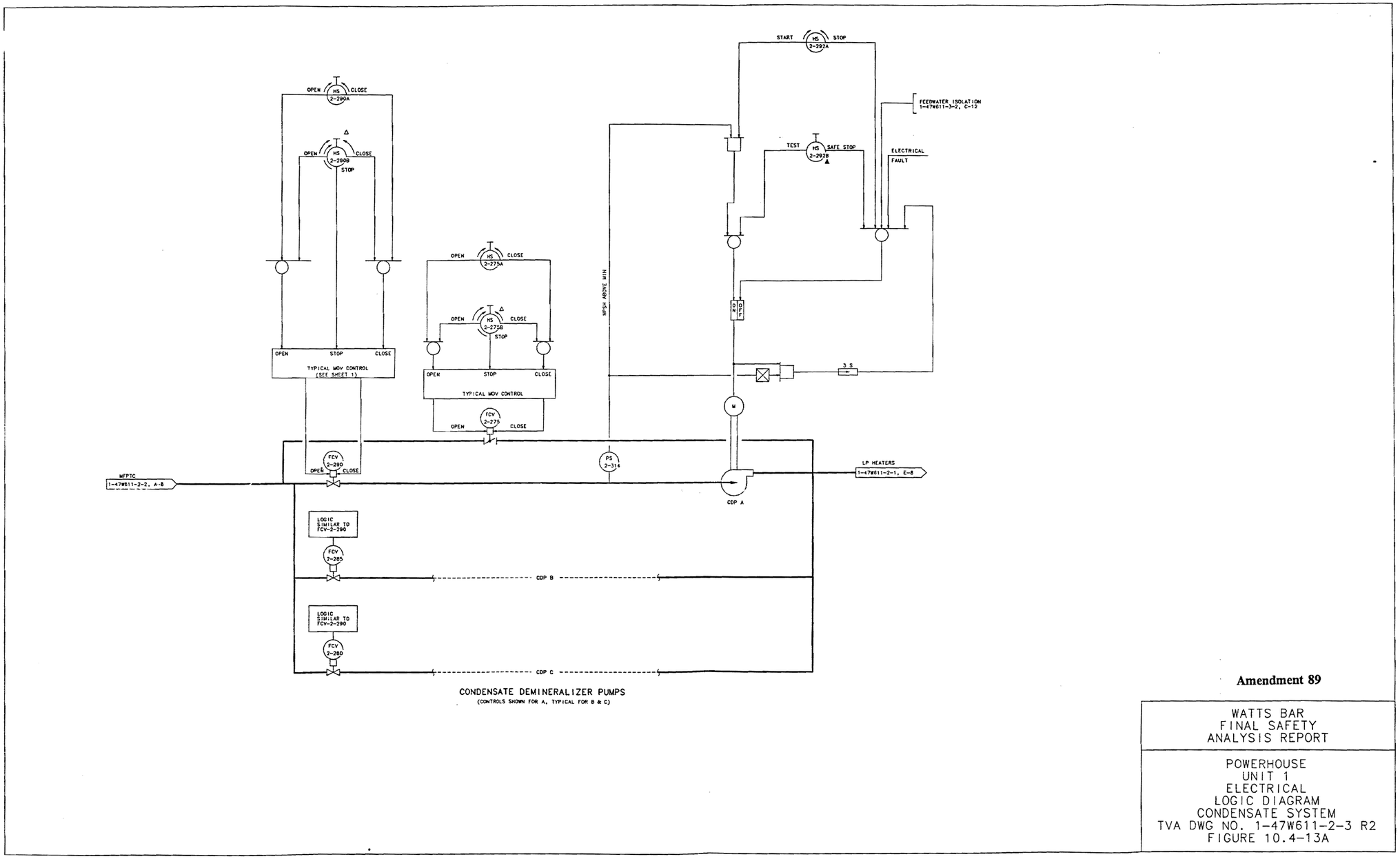

Figure 10.4-13a Powerhouse Unit 1 Electrical Logic Diagram Condensate System

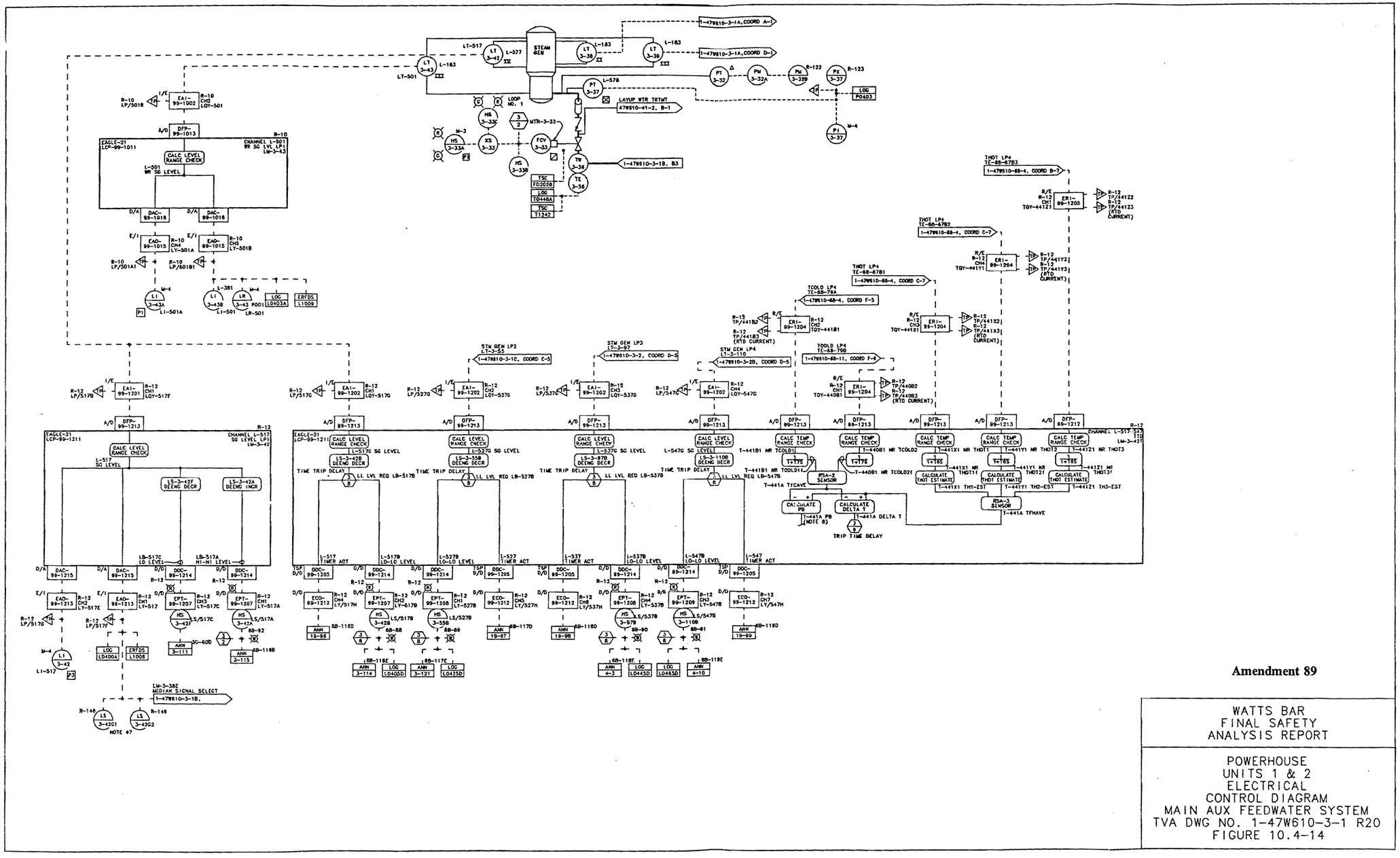

Amendment 89

WATTS BAR
FINAL SAFETY
ANALYSIS REPORT

POWERHOUSE
UNITS 1 & 2
ELECTRICAL
CONTROL DIAGRAM
MAIN AUX FEEDWATER SYSTEM
TVA DWG NO. 1-47W610-3-1 R20
FIGURE 10.4-14

Figure 10.4-14 Powerhouse Units 1 & 2 Electrical Control Diagram Main Auxiliary Feedwater System

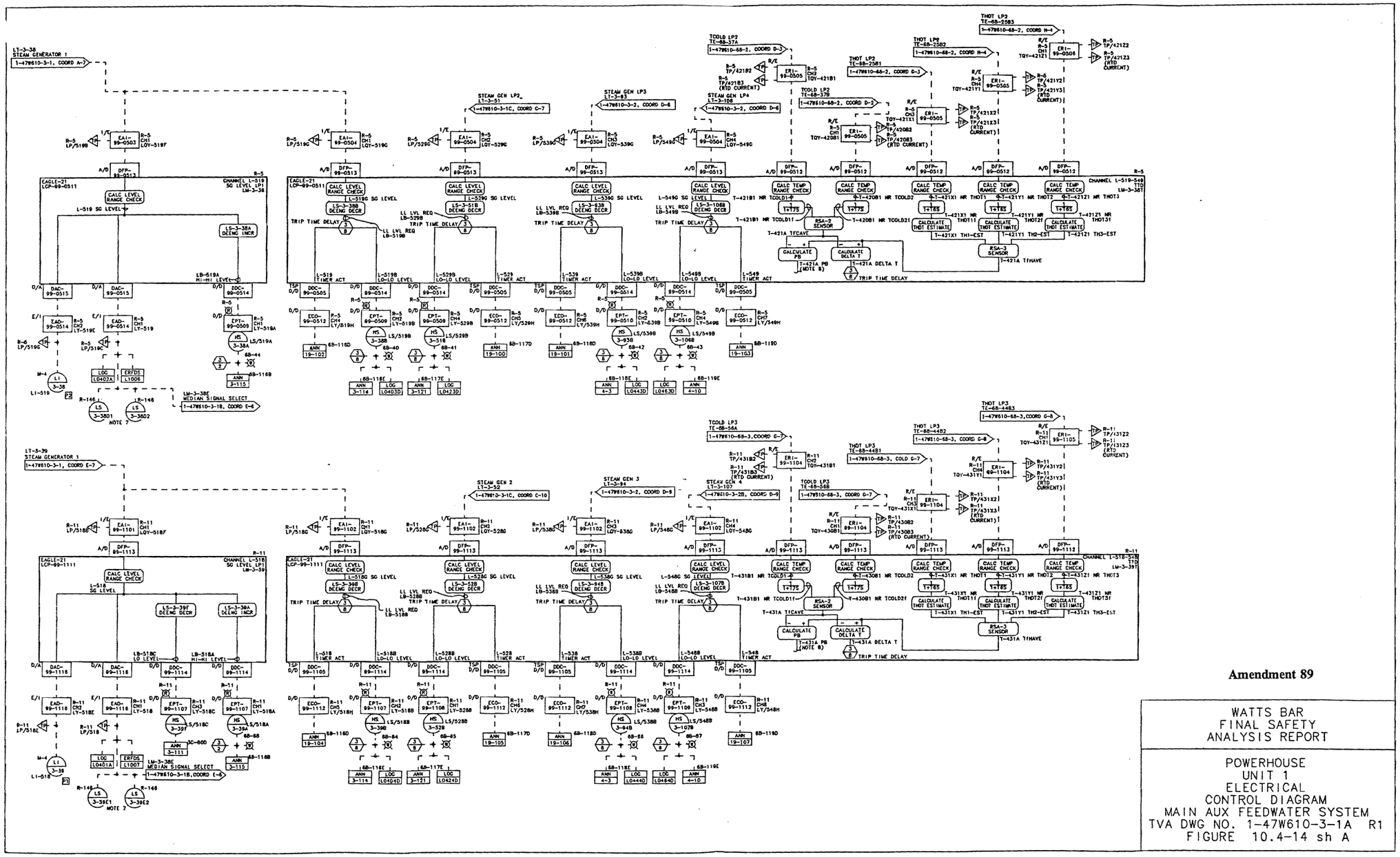

Figure 10.4-14 Powerhouse Unit 1 Electrical Control Diagram Main Auxiliary Feedwater System (Sheet A)

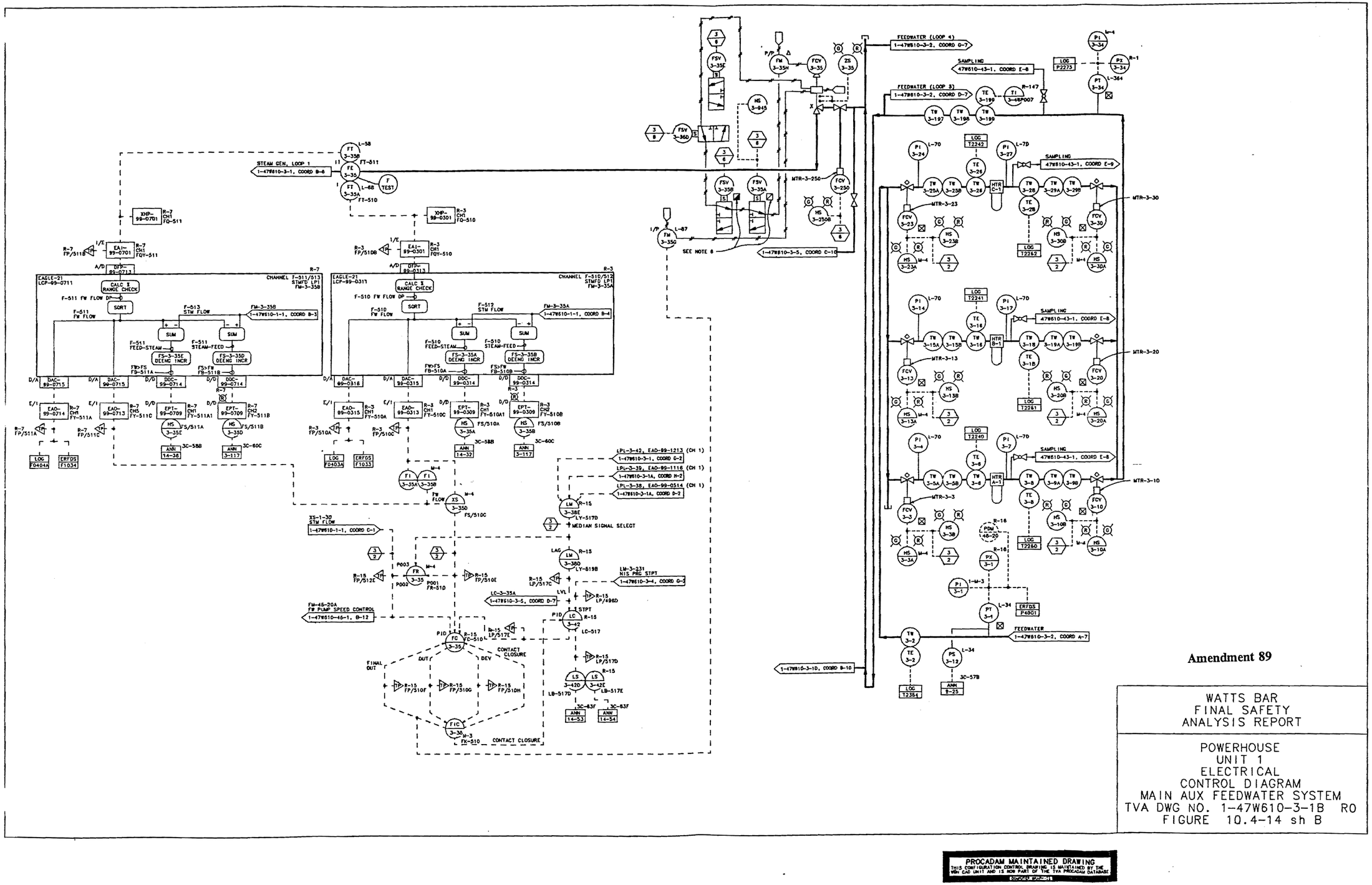

Figure 10.4-14 Powerhouse Unit 1 Electrical Control Diagram Main Auxiliary Feedwater System (Sheet B)

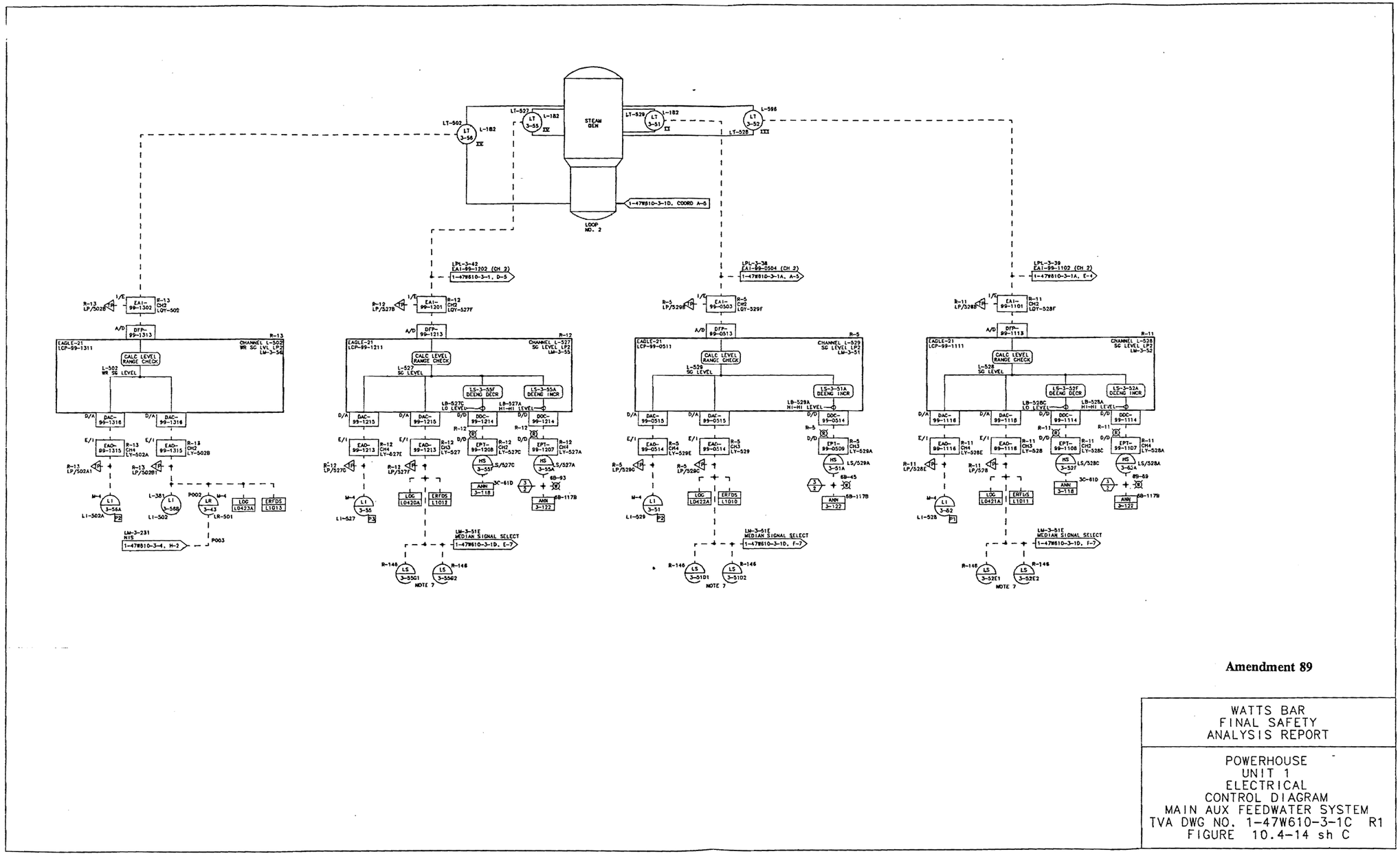

Amendment 89

WATTS BAR
FINAL SAFETY
ANALYSIS REPORT

POWERHOUSE
UNIT 1
ELECTRICAL
CONTROL DIAGRAM
MAIN AUX FEEDWATER SYSTEM
TVA DWG NO. 1-47W610-3-1C R1
FIGURE 10.4-14 sh C

PROCADAM MAINTAINED DRAWING
THIS CONFIGURATION CONTROL DRAWING IS MAINTAINED BY THE WBN CAD UNIT AND IS NOW PART OF THE TVA PROCADAM DATABASE

Figure 10.4-14 Powerhouse Unit 1 Electrical Control Diagram Main Auxiliary Feedwater System (Sheet C)

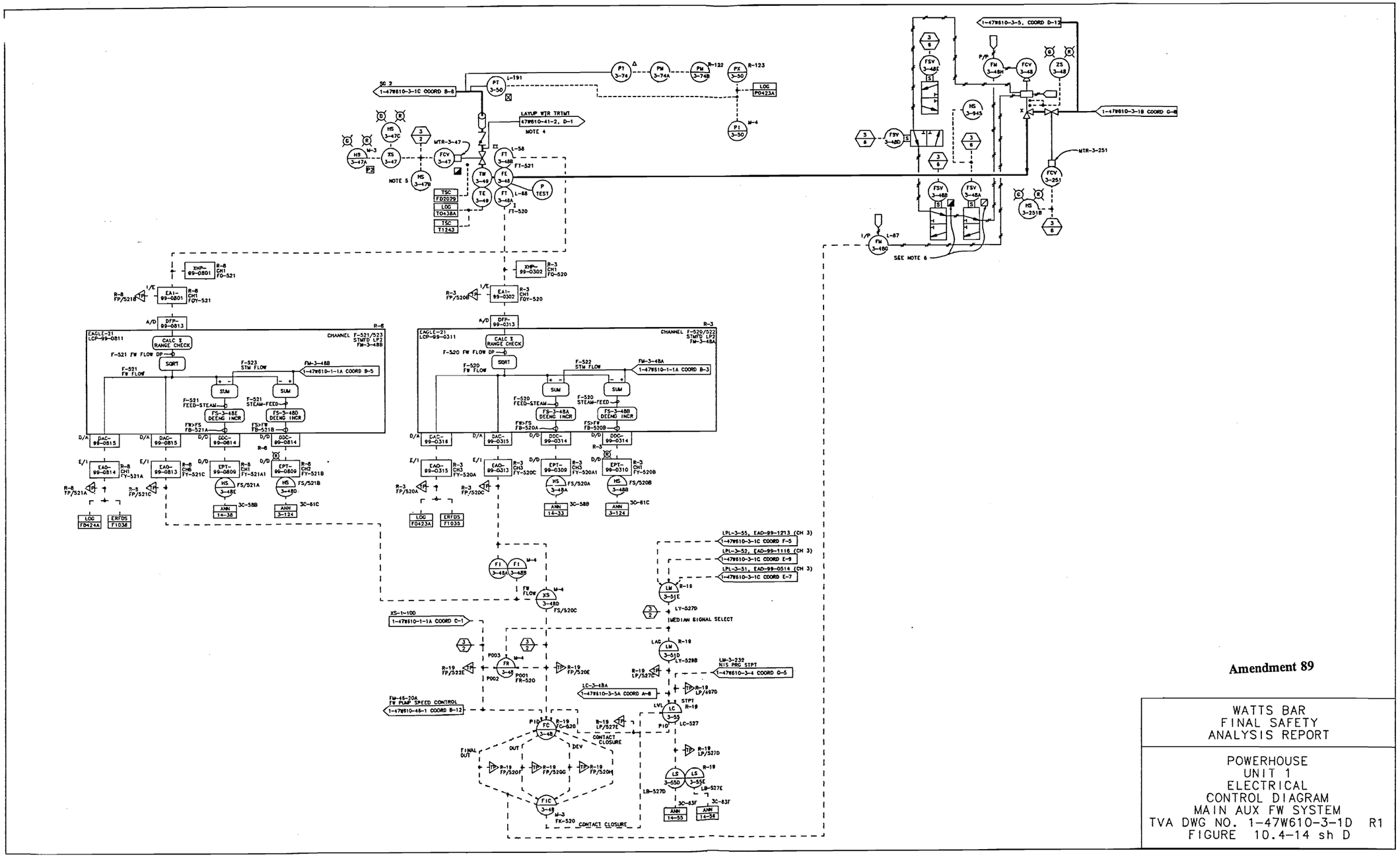

Figure 10.4-14 Powerhouse Unit 1 Electrical Control Diagram Main Auxiliary Feedwater System (Sheet D)

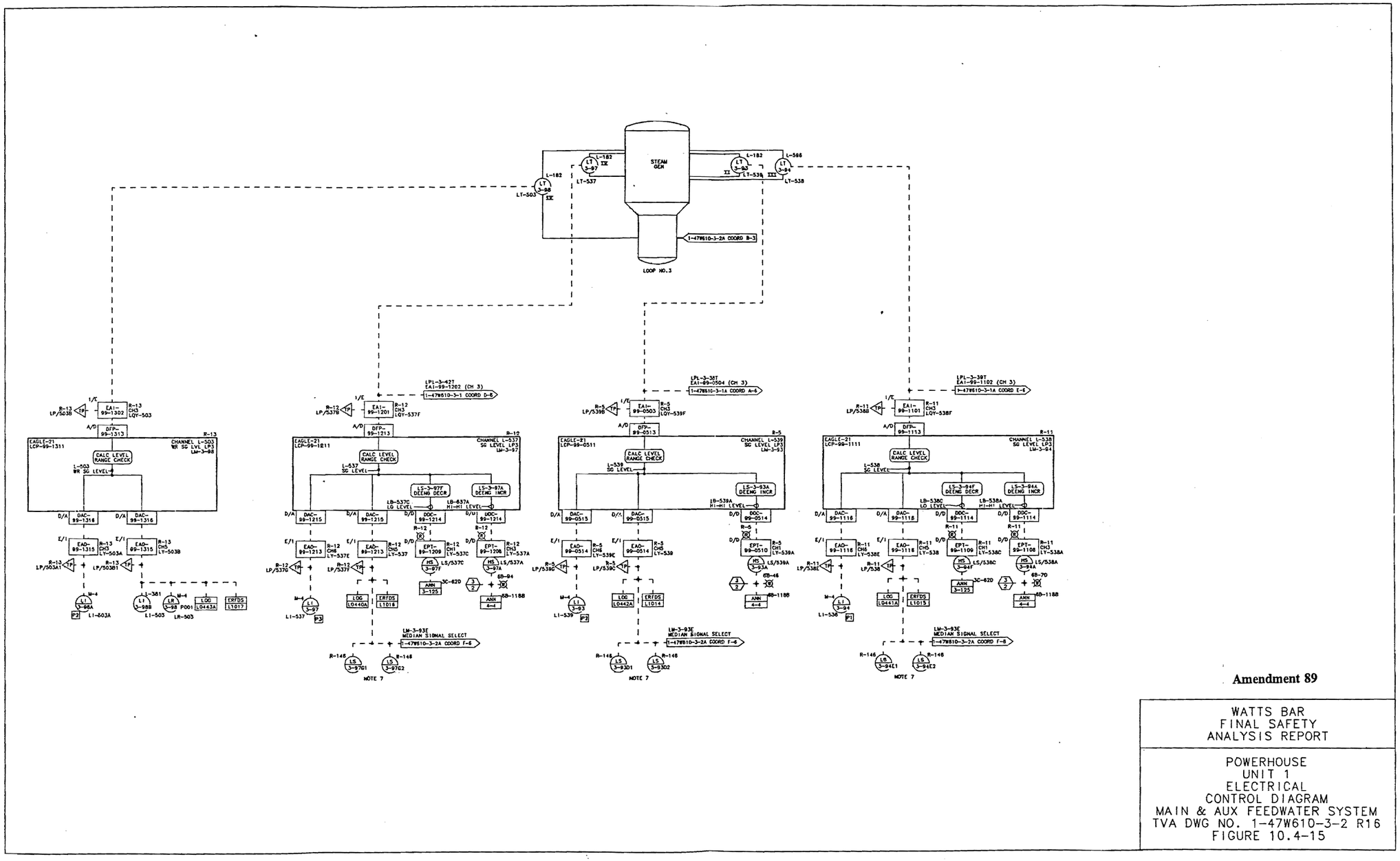

Figure 10.4-15 Powerhouse Unit 1 Electrical Control Diagram Main & Aux Feedwater System

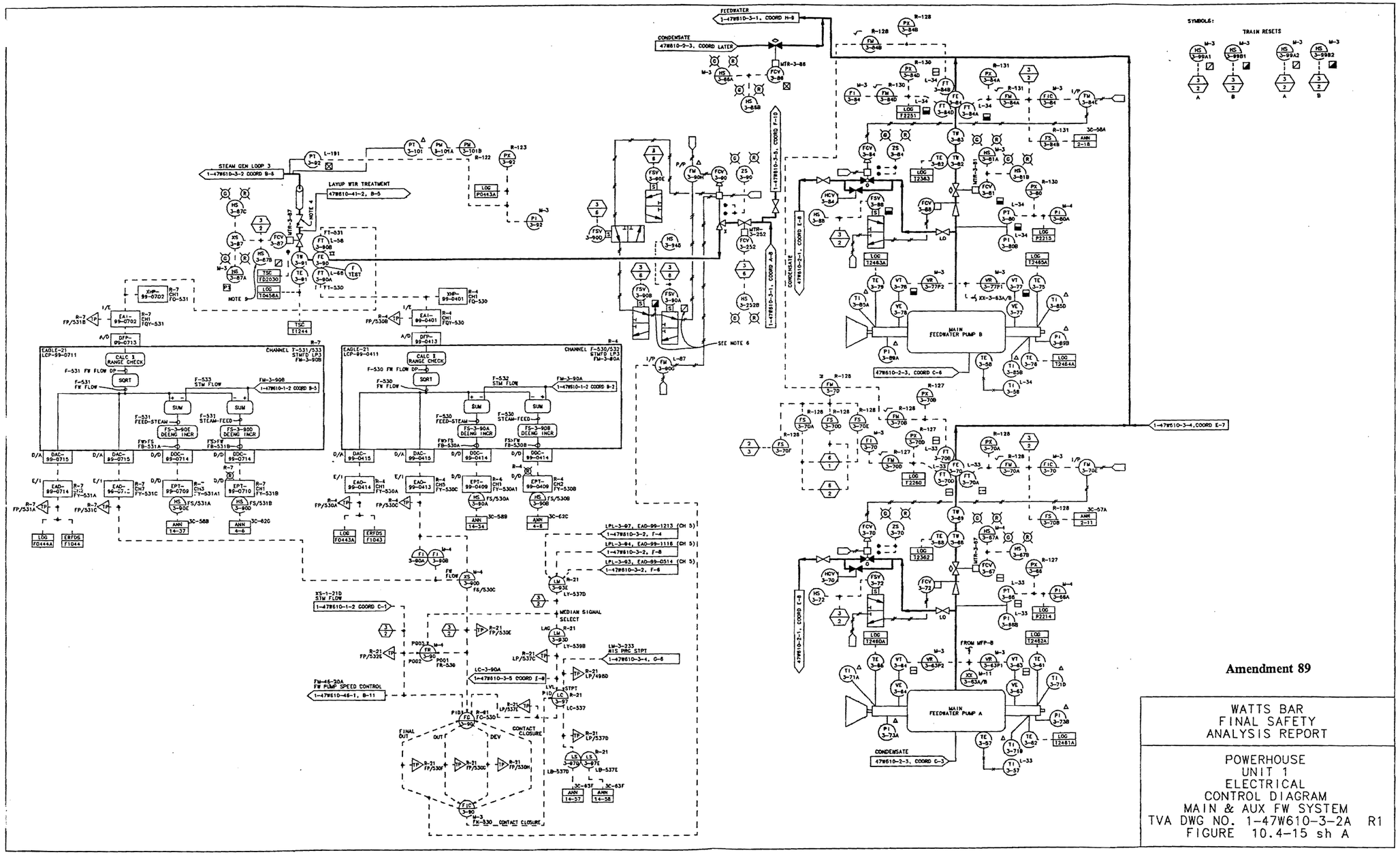

Figure 10.4-15 Powerhouse Unit 1 Electrical Control Diagram Main & Aux Feedwater System (Sheet A)

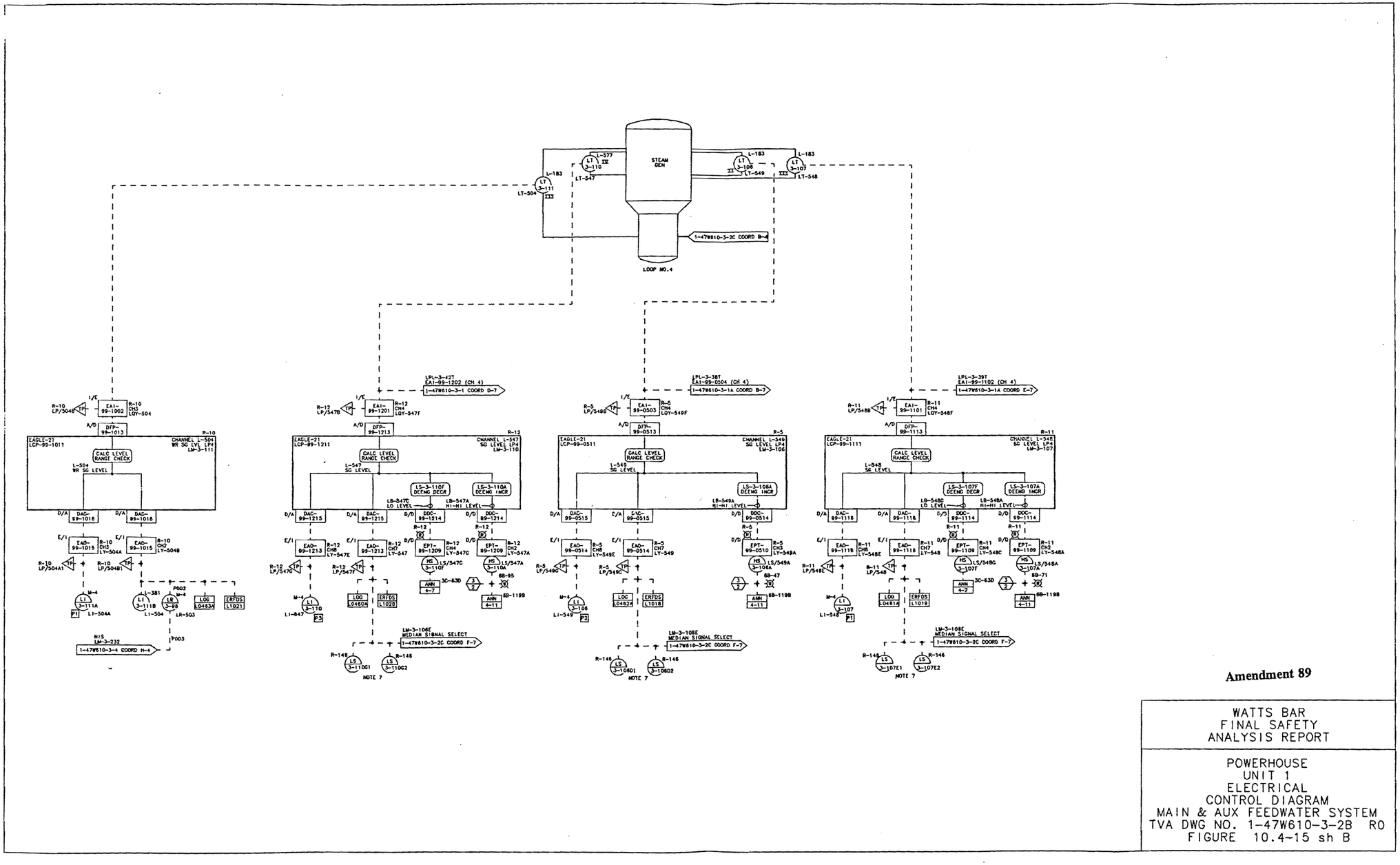

Amendment 89

WATTS BAR
FINAL SAFETY
ANALYSIS REPORT

POWERHOUSE
UNIT 1
ELECTRICAL
CONTROL DIAGRAM
MAIN & AUX FEEDWATER SYSTEM
TVA DWG NO. 1-47W610-3-2B RO
FIGURE 10.4-15 sh B

PROCADAM MAINTAINED DRAWING
THIS CONFIGURATION CONTROL DRAWING IS MAINTAINED BY THE WBN CAD UNIT AND IS NOW PART OF THE TVA PROCADAM DATABASE

Figure 10.4-15 Powerhouse Unit 1 Electrical Control Diagram Main & Aux Feedwater System (Sheet B)

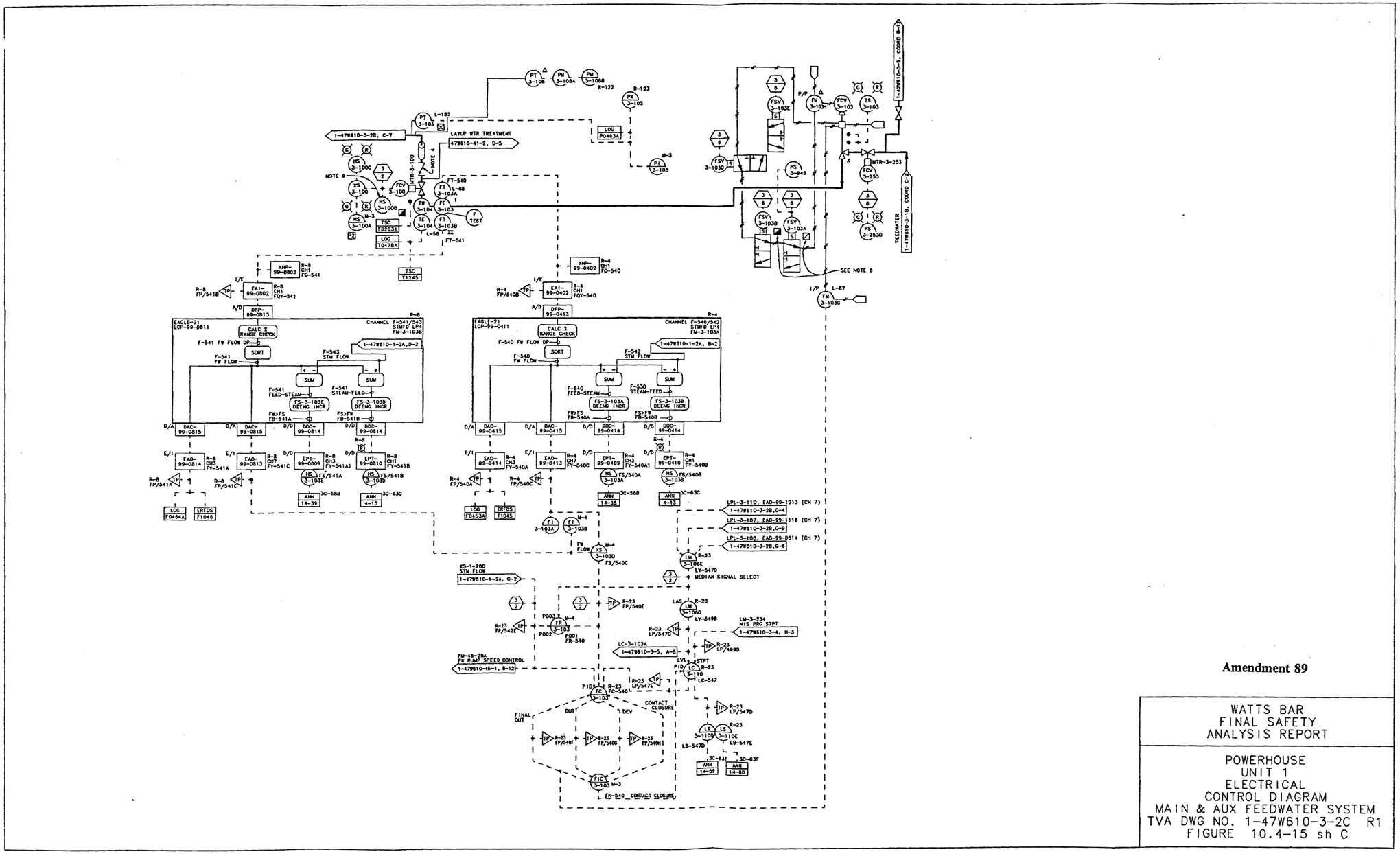

Figure 10.4-15 Powerhouse Unit 1 Electrical Control Diagram Main & Aux Feedwater System (Sheet C)

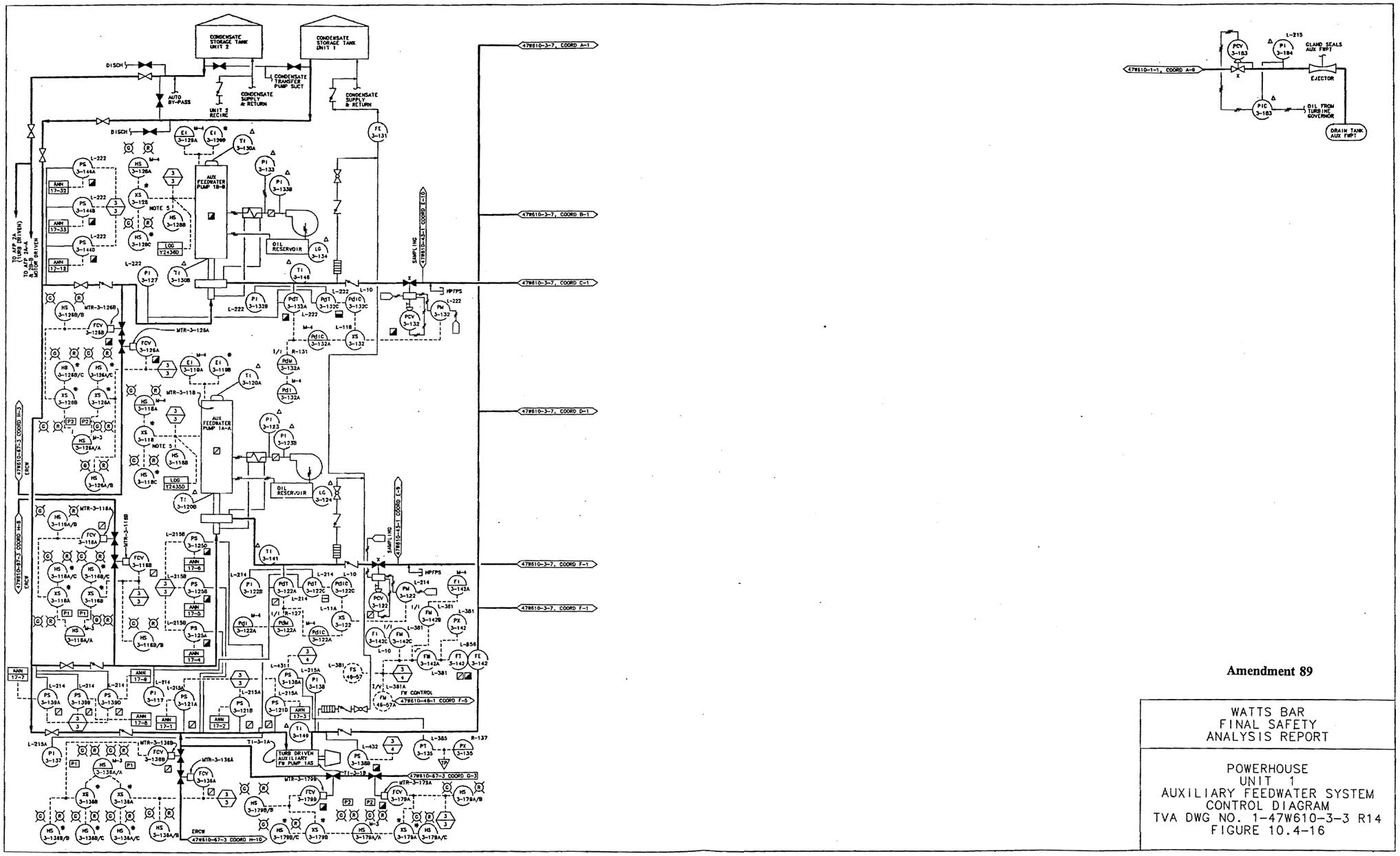

Figure 10.4-16 Powerhouse Unit 1 Auxiliary Feedwater System Control Diagram

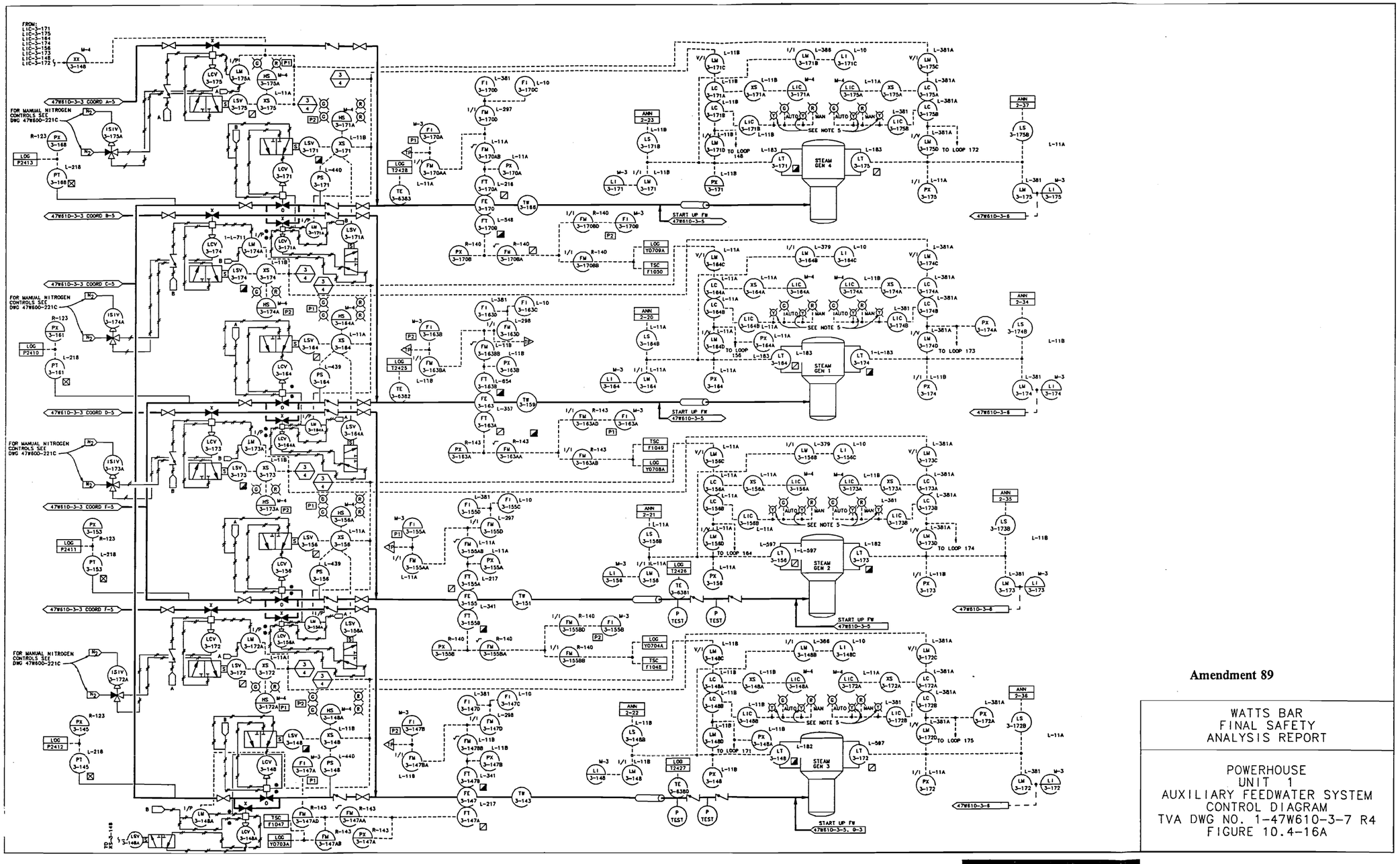

Figure 10.4-16a Powerhouse Unit 1 Auxiliary Feedwater System Control Diagram

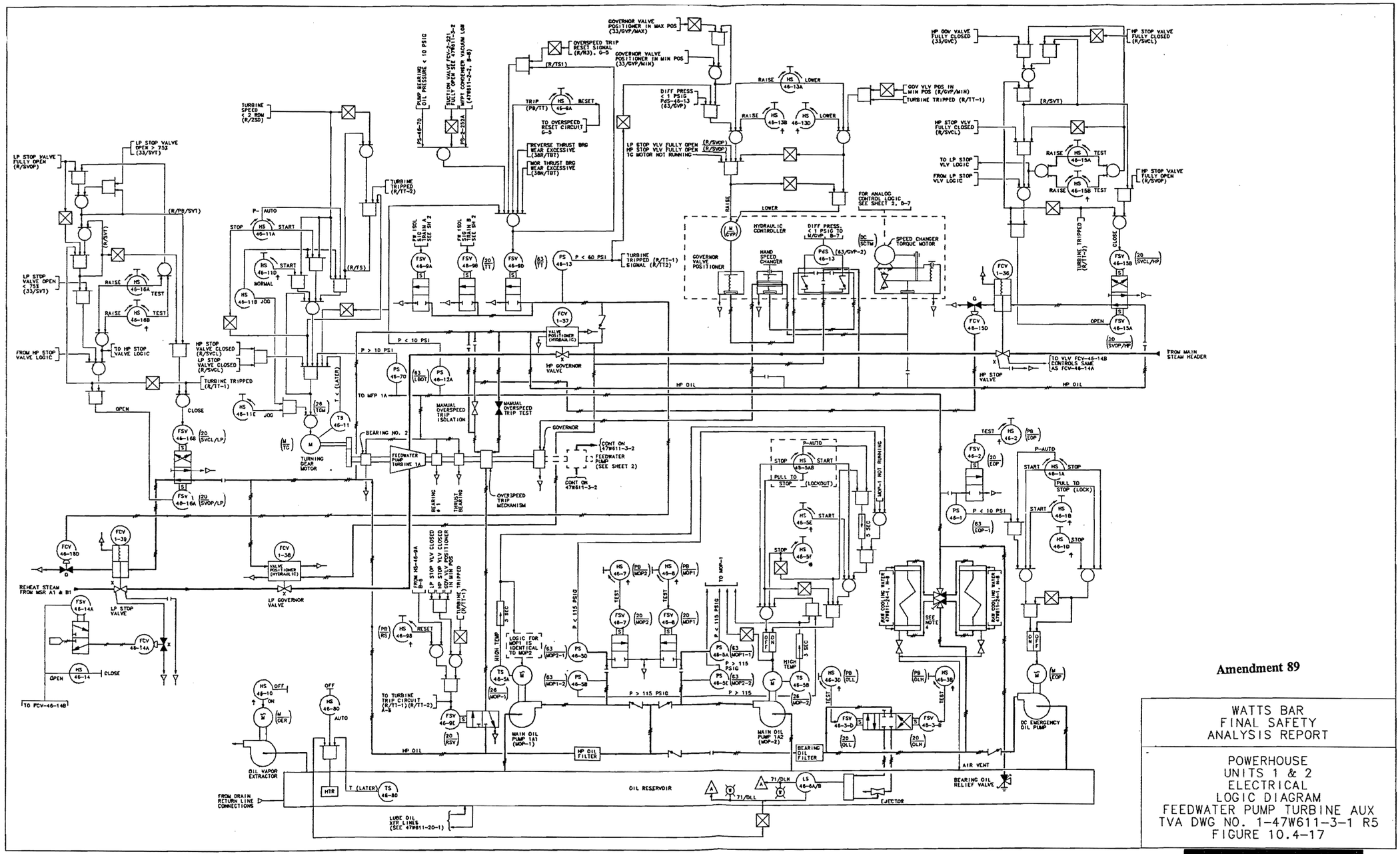

Figure 10.4-17 Powerhouse Units 1 & 2 Electrical Logic Diagram Feedwater Pump Turbine Aux

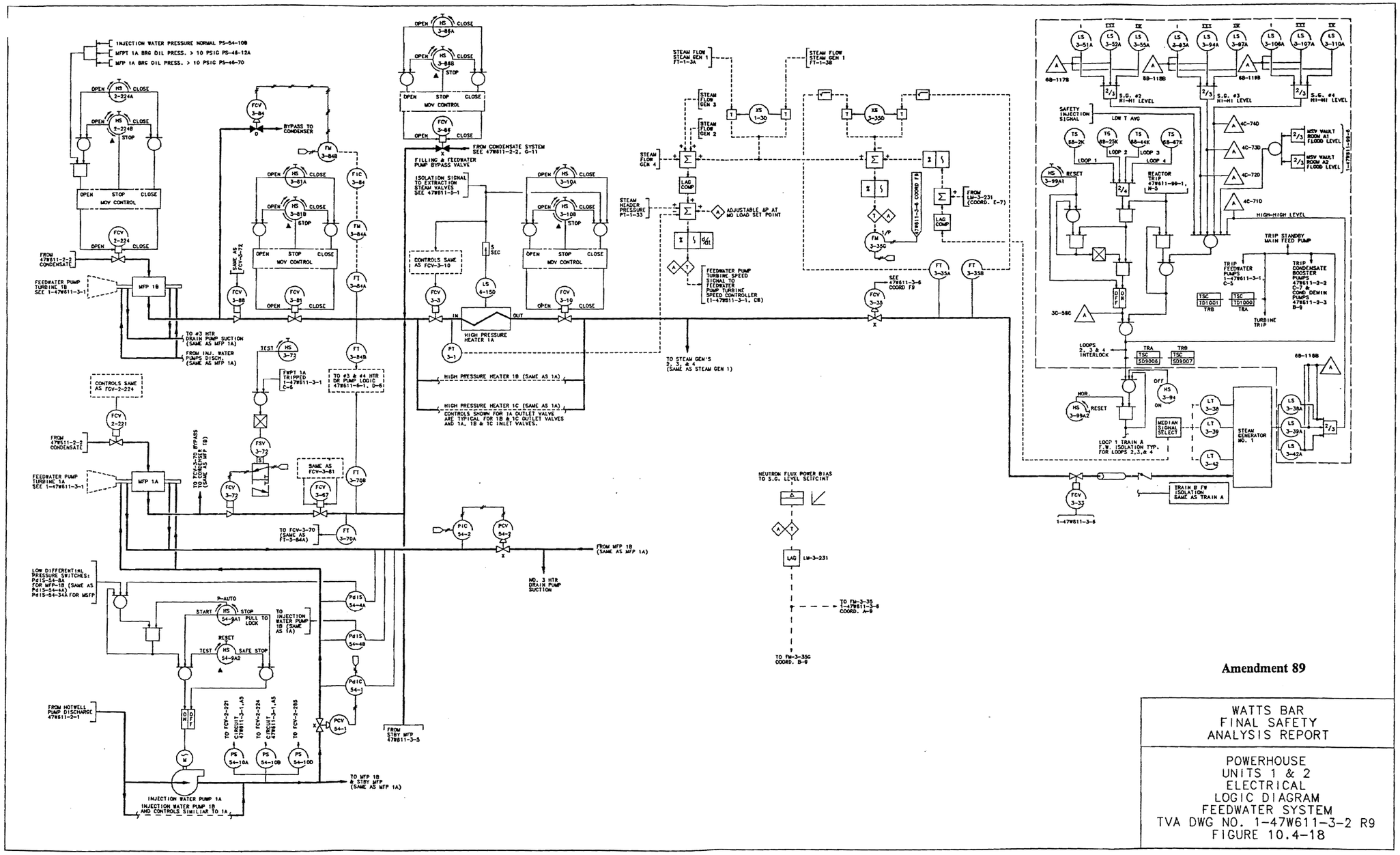

Amendment 89

WATTS BAR
FINAL SAFETY
ANALYSIS REPORT

POWERHOUSE
UNITS 1 & 2
ELECTRICAL
LOGIC DIAGRAM
FEEDWATER SYSTEM
TVA DWG NO. 1-47W611-3-2 R9
FIGURE 10.4-18

PROCADAM MAINTAINED DRAWING
THIS CONFIGURATION CONTROL DRAWING IS MAINTAINED BY THE NSM CAD UNIT AND IS NOW PART OF THE TVA PROCADAM DATABASE

Figure 10.4-18 Powerhouse Units 1 & 2 Electrical Logic Diagram Feedwater System

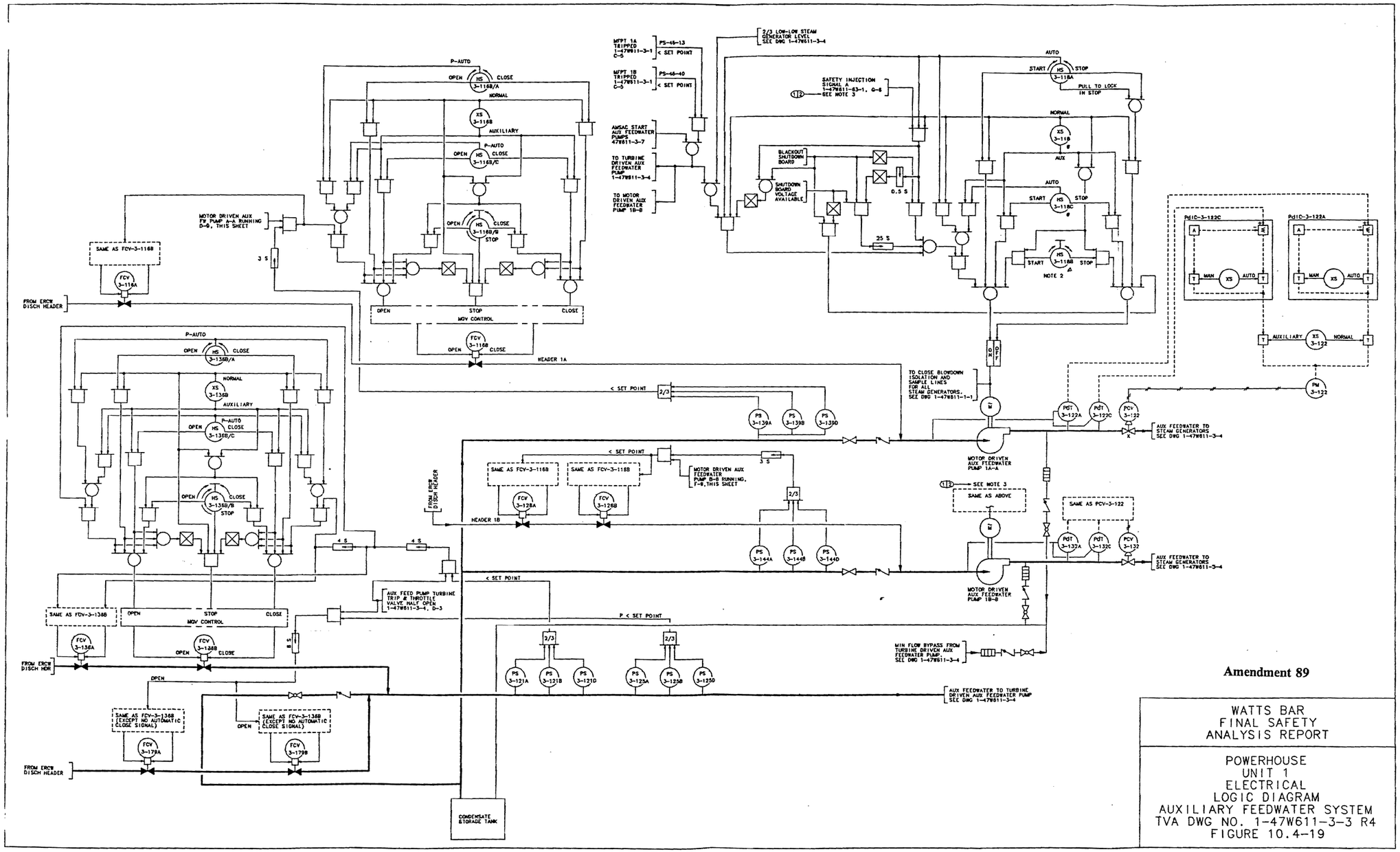

Figure 10.4-19 Powerhouse Unit 1 Electrical Logic Diagram Auxiliary Feedwater System

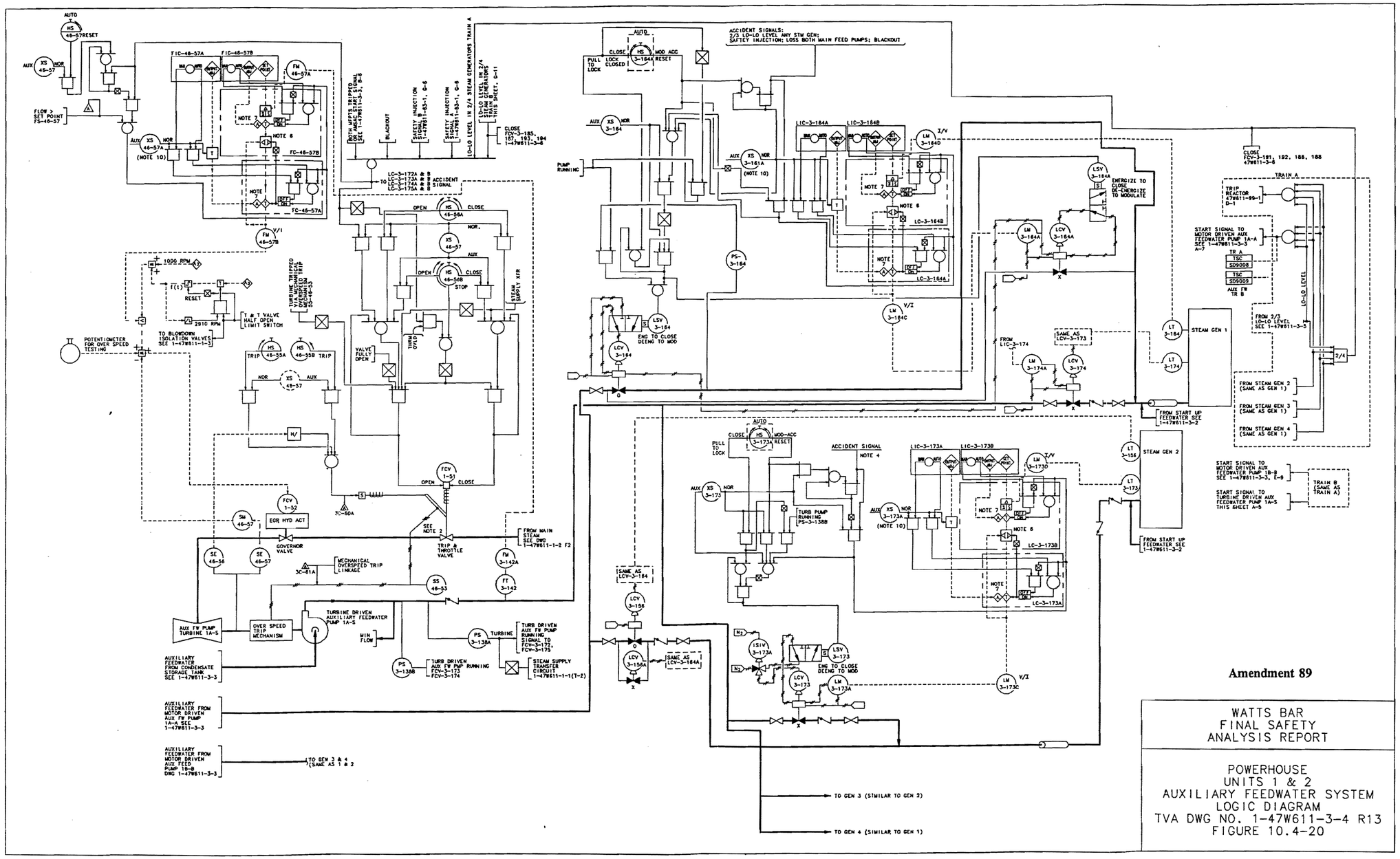

Figure 10.4-20 Powerhouse Units 1 & 2 Auxiliary Feedwater System Logic Diagram

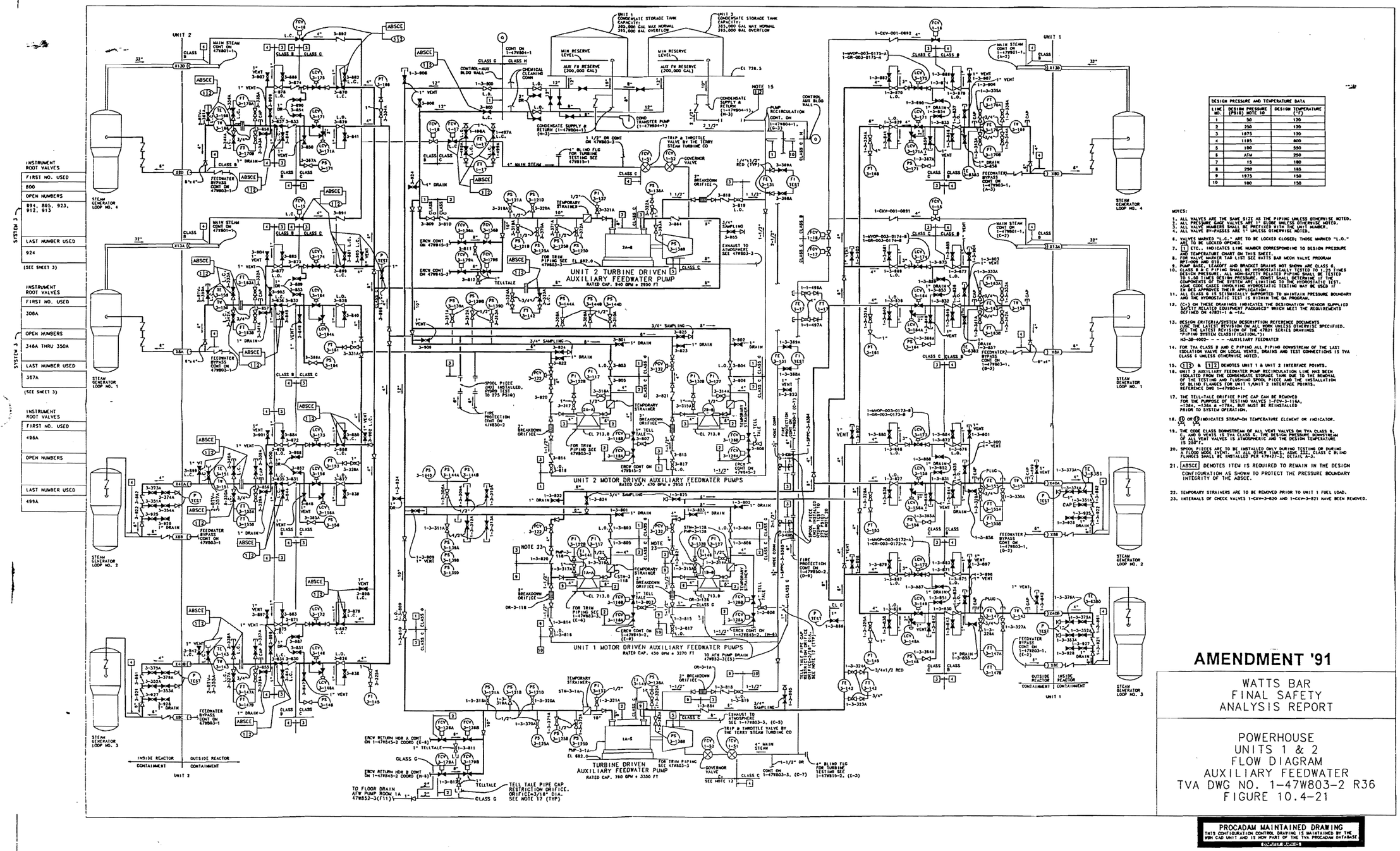

DESIGN PRESSURE AND TEMPERATURE DATA		
LINE NO.	DESIGN PRESSURE (PSIG) NOTE 10	DESIGN TEMPERATURE (°F)
1	50	120
2	250	120
3	1875	120
4	1185	800
5	100	550
6	ATM	250
7	15	180
8	250	185
9	1875	150
10	100	150

NOTES:

1. ALL VALVES ARE THE SAME SIZE AS THE PIPING UNLESS OTHERWISE NOTED.
2. ALL PRESSURE GAGE VALVES ARE 1" GLOBE UNLESS OTHERWISE NOTED.
3. ALL VALVE NUMBERS SHALL BE PREFIXED WITH THE UNIT NUMBER.
4. ALL VALVE BY-PASSES ARE 1" UNLESS OTHERWISE NOTED.
6. VALVES MARKED "L.O." ARE TO BE LOCKED CLOSED; THOSE MARKED "L.O." ARE TO BE LOCKED OPENED.
7. [1] ETC., INDICATES LINE NUMBER CORRESPONDING TO DESIGN PRESSURE AND TEMPERATURE CHART ON THIS SHEET.
8. FOR VALVE MARKER TAG LIST SEE WATTS BAR MECH VALVE PROGRAM NPI-0QA AND 010.
9. PIPE SUPPORTS, FOOTS AND BRACKET DRAINS NOT SHOWN ARE CLASS G.
10. CLASS B&C PIPING SHALL BE HYDROSTATICALLY TESTED TO 1.25 TIMES DESIGN PRESSURE. ALL NON-SAFETY RELATED PIPING SHALL BE TESTED TO 1.50 TIMES DESIGN PRESSURE. CONST SHALL DETERMINE IF THE COMPONENTS OF THE SYSTEM ARE LIMITING TO THE HYDROSTATIC TEST. ASME CODE CASES INVOLVING HYDROSTATIC TESTING MAY BE USED IF EN DES APPROVES THEIR APPLICATION.
11. ALL CLASS G IS SEISMICALLY SUPPORTED TO MAINTAIN PRESSURE BOUNDARY AND THE HYDROSTATIC TEST IS WITHIN THE QA PROGRAM.
12. (C-) ON THESE DRAWINGS INDICATES THE DESIGNATION "VENDOR SUPPLIED SAFETY RELATED EQUIPMENT PACKAGES" WHICH MEET THE REQUIREMENTS DEFINED ON 47B211-1 & -1A.
13. DESIGN CRITERIA/SYSTEM DESCRIPTION REFERENCE DOCUMENTS (USE THE LATEST REVISION ON ALL WORK UNLESS OTHERWISE SPECIFIED. SEE THE LATEST REVISION OF THE 47B211 SERIES DRAWINGS "PIPING SYSTEM CLASSIFICATION."):
   N3-38-4003- - - - - -AUXILIARY FEEDWATER
14. FOR TVA CLASS B AND C PIPING ALL PIPING DOWNSTREAM OF THE LAST ISOLATION VALVE ON LOCAL VENTS, DRAINS AND TEST CONNECTIONS IS TVA CLASS G UNLESS OTHERWISE NOTED.
15. (12) & [12] DENOTES UNIT 1 & UNIT 2 INTERFACE POINTS.
16. UNIT 2 AUXILIARY FEEDWATER PUMP RECIRCULATION LINE HAS BEEN ISOLATED FROM THE CONDENSATE STORAGE TANK DUE TO THE REMOVAL OF THE TESTING AND FLUSHING SPOOL PIECE AND THE INSTALLATION OF BLIND FLANGES FOR UNIT 1/UNIT 2 INTERFACE POINTS. REFERENCE DWG 1-47W804-1.
17. THE TELL-TALE ORIFICE PIPE CAP CAN BE REMOVED FOR THE PURPOSE OF TESTING VALVES 1-FCV-3-118A, -138A, -138A & -178A; BUT MUST BE REINSTALLED PRIOR TO SYSTEM OPERATION.
18. (E) OR (E) INDICATES STRAP-ON TEMPERATURE ELEMENT OR INDICATOR.
19. THE CODE CLASS DOWNSTREAM OF ALL VENT VALVES ON TVA CLASS B, C, AND D VENTS IS TVA CLASS G. THE DESIGN PRESSURE DOWNSTREAM OF ALL VENT VALVES IS ATMOSPHERIC AND THE DESIGN TEMPERATURE IS 250°F.
20. SPOOL PIECES ARE TO BE INSTALLED ONLY DURING TESTING OR DURING A FLOOD MODE EVENT. AT ALL OTHER TIMES, ASME SECT. CLASS C BLIND FLANGES SHALL BE INSTALLED PER 47W427-3; DETAIL A-3.
21. ABSCE DENOTES ITEM IS REQUIRED TO REMAIN IN THE DESIGN CONFIGURATION AS SHOWN TO PROTECT THE PRESSURE BOUNDARY INTEGRITY OF THE ABSCE.
22. TEMPORARY STRAINERS ARE TO BE REMOVED PRIOR TO UNIT 1 FUEL LOAD.
23. INTERNALS OF CHECK VALVES 1-CKV-3-820 AND 1-CKV-3-821 HAVE BEEN REMOVED.

Figure 10.4-21 Powerhouse Units 1 & 2 Flow Diagram Auxiliary Feedwater

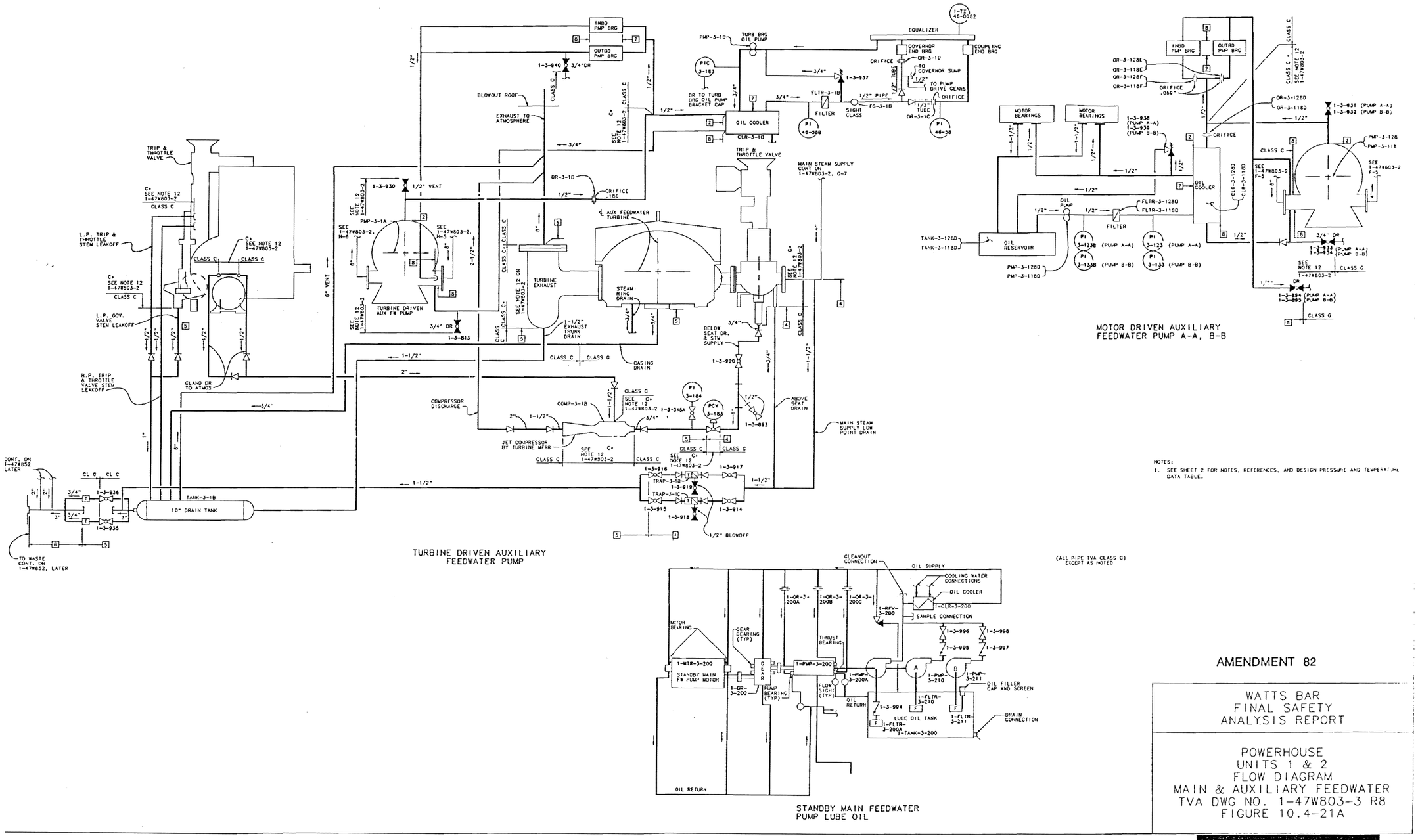

Figure 10.4-21a Powerhouse Units 1 & 2 Flow Diagram Main & Auxiliary Feedwater

Figure 10.4-22 Deleted by Amendment 82

Figure 10.4-23 Deleted by Amendment 82

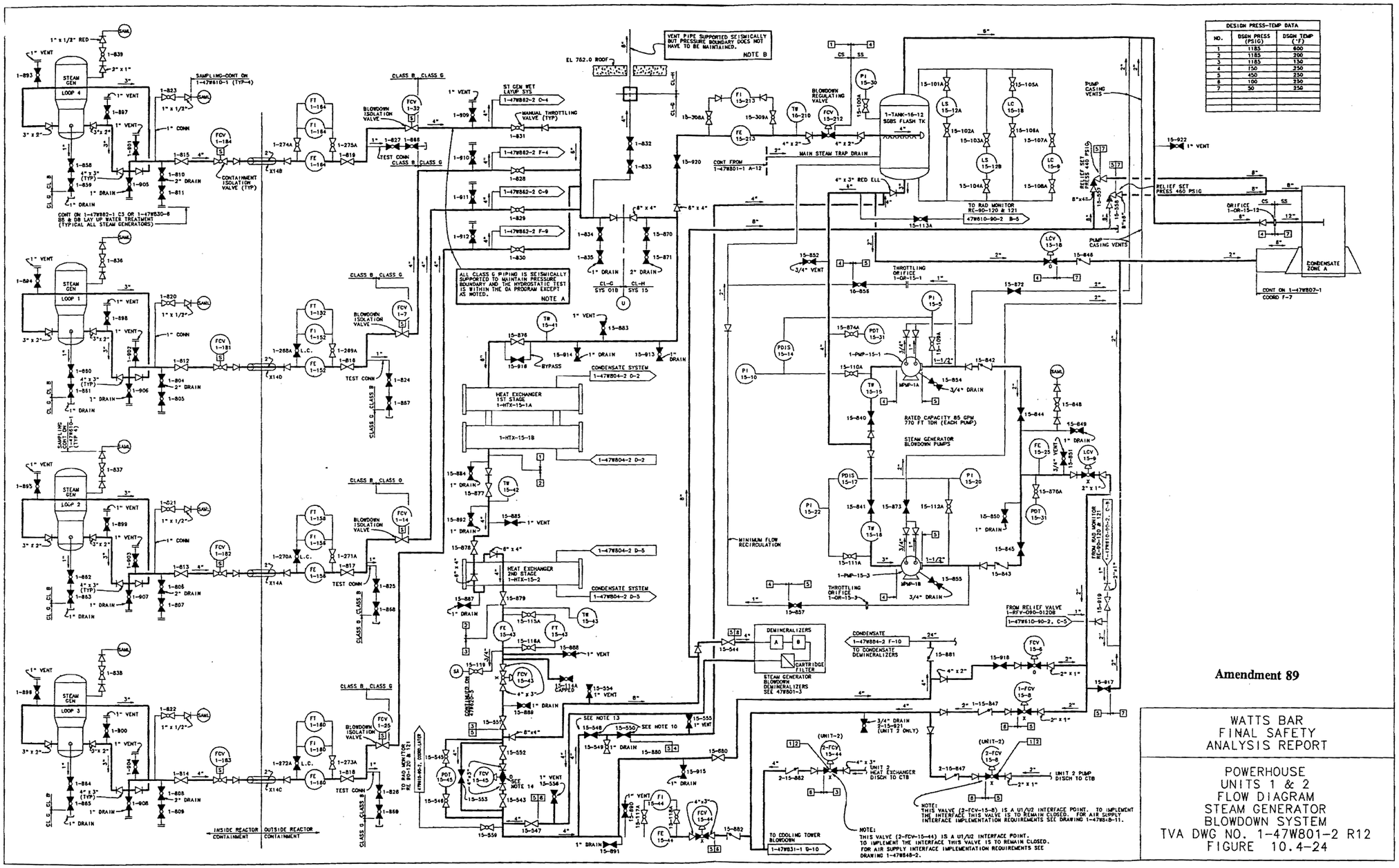

Figure 10.4-24 Powerhouse Units 1 & 2 Flow Diagram Steam Generator Blowdown System

Figure 10.4-25 Deleted by Amendment 82

Figure 10.4-26 Deleted by Amendment 82

Figure 10.4-27 Deleted by Amendment 94

Figure 10.4-28 Deleted by Amendment 94

Figure 10.4-29 Deleted by Amendment 94

Figure 10.4-30 Deleted by Amendment 94

Figure 10.4-31 Deleted by Amendment 94

Figure 10.4-32 Deleted by Amendment 94

Figure 10.4-33 Deleted by Amendment 94

Figure 10.4-34 Deleted by Amendment 94

Figure 10.4-35 Deleted by Amendment 94

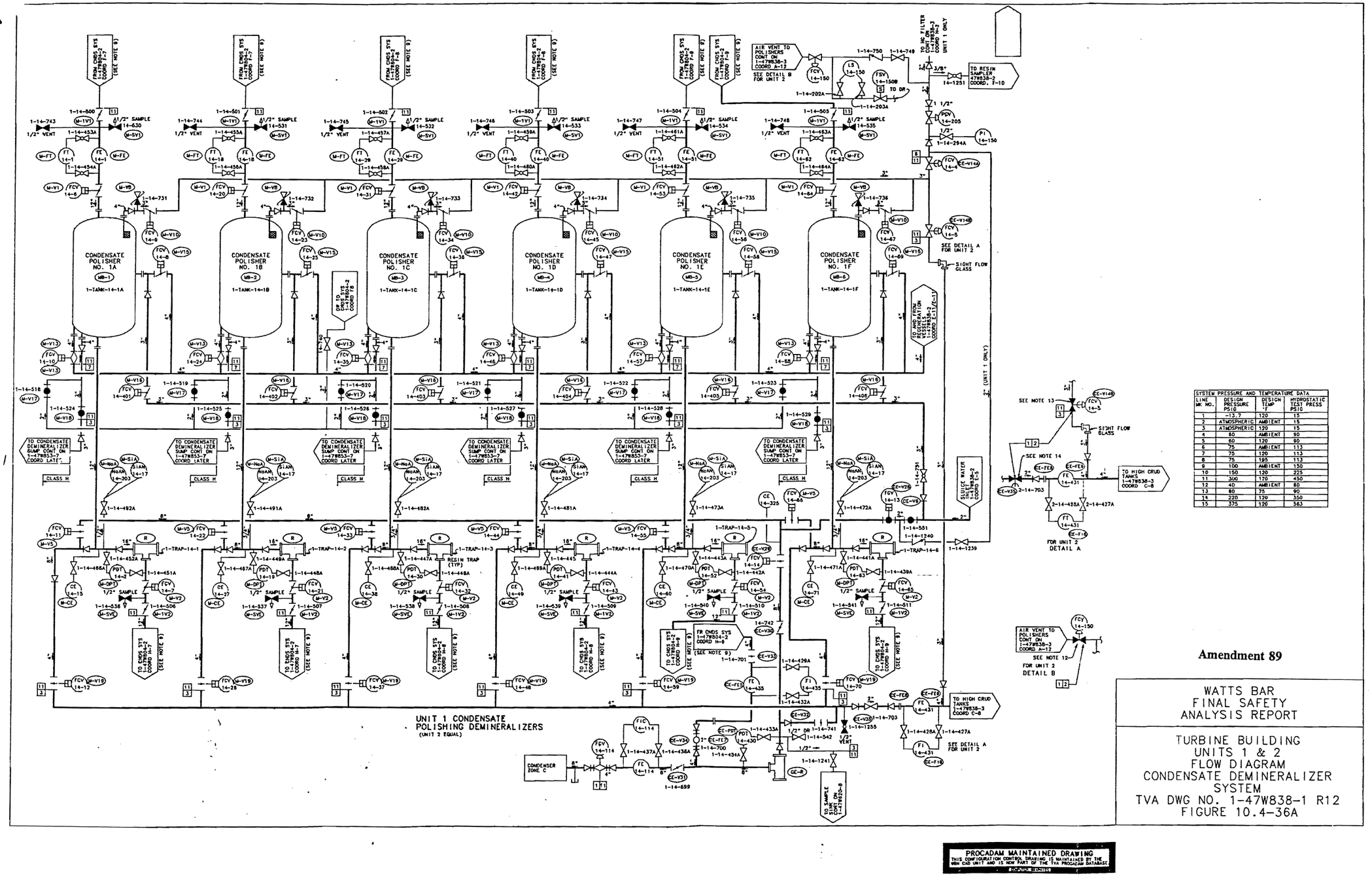

SYSTEM PRESSURE AND TEMPERATURE DATA			
LINE NO.	DESIGN PRESSURE PSIG	DESIGN TEMP °F	HYDROSTATIC TEST PRESS PSIG
1	-13.7	120	15
2	ATMOSPHERIC	AMBIENT	15
3	ATMOSPHERIC	120	15
4	80	AMBIENT	90
5	60	120	90
6	75	AMBIENT	113
7	75	120	113
8	75	195	113
9	100	AMBIENT	150
10	150	120	225
11	300	120	450
12	40	AMBIENT	60
13	80	75	90
14	220	120	350
15	375	120	563

Figure 10.4-36a Turbine Building Units 1 & 2 Flow Diagram Condensate Demineralizer System

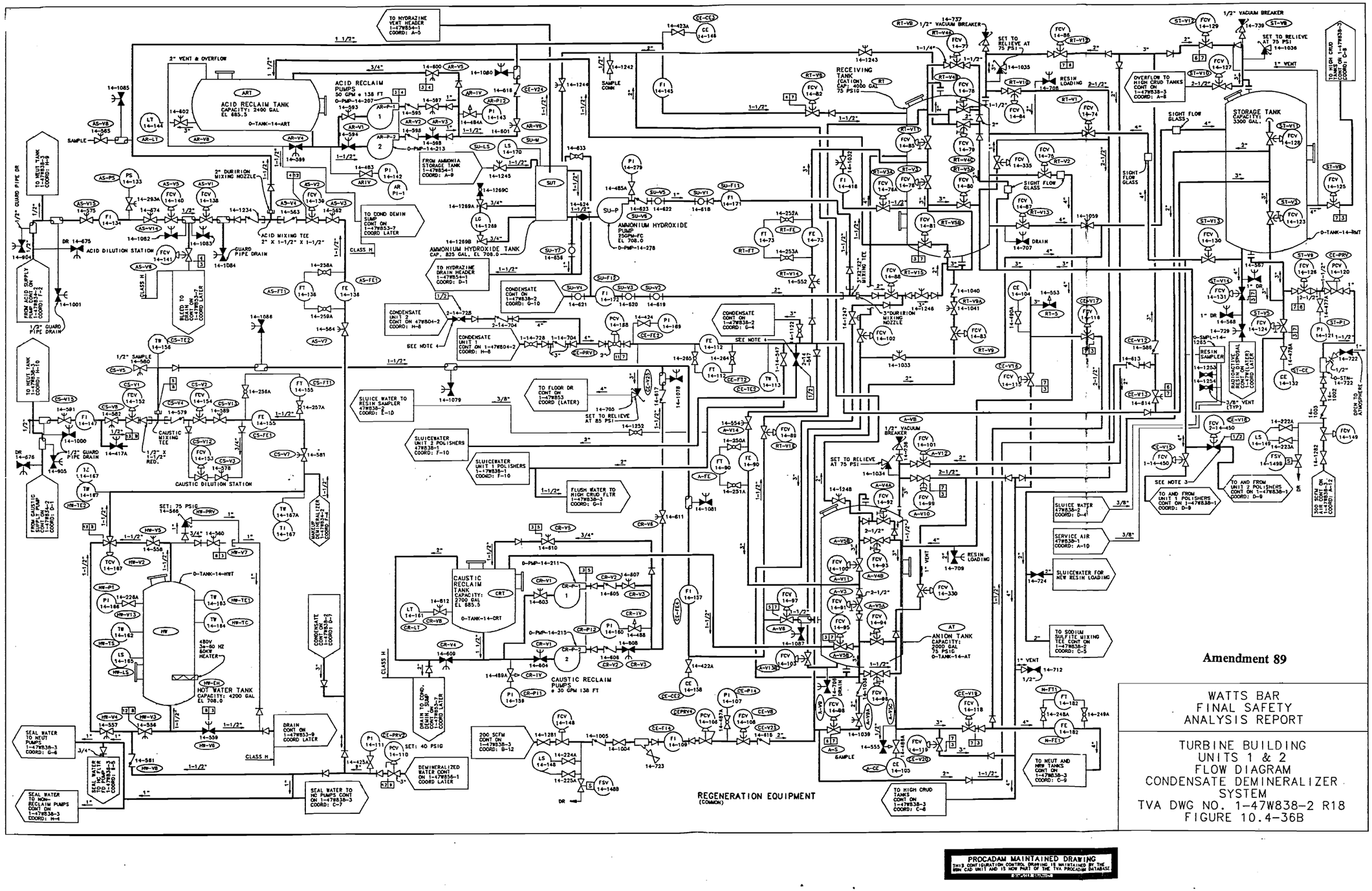

Figure 10.4-36b Turbine Building Units 1 & 2 Flow Diagram Condensate Demineralizer System

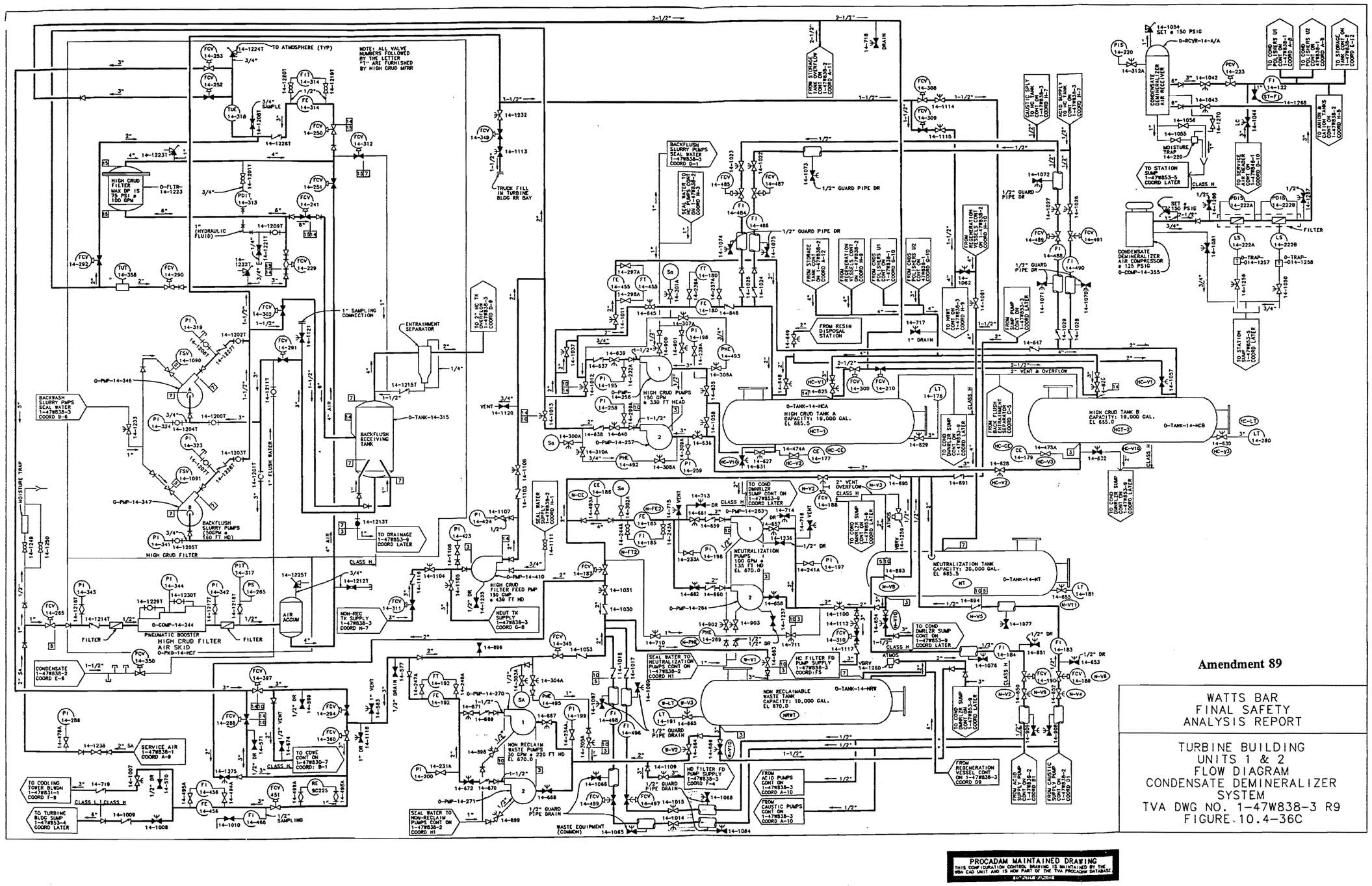

Figure 10.4-36c Turbine Building Units 1 & 2 Flow Diagram Condensate Demineralizer System

Figure 10.4-37 Deleted by Amendment 94.