## 9.4 AIR CONDITIONING, HEATING, COOLING, AND VENTILATION SYSTEMS

### 9.4.1 Control Room Area Ventilation System

#### 9.4.1.1 Design Bases

The Control Building heating, ventilating, air-conditioning (HVAC), and air cleanup systems are designed to maintain temperature and humidity conditions throughout the building for the protection, operation, and maintenance and testing of plant controls, and for the safe, uninterrupted occupancy of the main control room habitability system (MCRHS) area during an accident and the subsequent recovery period. Refer to Section 6.4 for further information regarding control room habitability and definition of MCRHS area. The main control room habitability zone (MCRHZ) is designed to maintain a positive pressure relative to the outdoors and to the adjacent areas at all times, except during a tornado warning, to minimize air inleakage.

The Control Building air-conditioned equipment areas and normally occupied personnel spaces are maintained in the range of 60°F minimum to 104°F maximum temperature during all modes of operation. Adequate envirionmental conditions are provided for equipment operation and protection, and personnel comfort in the control room during normal, accident, and post-accident recovery conditions.

The Control Building outside air intakes are provided with radiation monitors, and smoke detectors. Indicators are provided with the radiation monitors. Main Control Room (MCR) common annunciation is provided. Isolation of the MCRHZ occurs automatically upon the actuation of a safety injection signal from either unit or upon indication of high radiation, or smoke concentrations in the outside air supply stream to the building. The Control Building HVAC outside air intakes can also be isolated by closing the tornado dampers. The tornado dampers are closed manually from the MCR during a tornado warning to protect the Control Building from tornado depressurization effects.

Upon receipt of a signal for MCRHS area isolation, Control Room Isolation (CRI), the following conditions are automatically implemented:

*(1)* The Control Building emergency air cleanup fans operate to recirculate a portion of the MCRHS area air-conditioning system return air through the cleanup trains composed of HEPA filters and charcoal adsorbers.

*(2)* The Control Building emergency pressurizing air supply fan operates to supply a reduced stream of outside air to the MCR air-conditioning system to maintain the MCRHZ pressurized relative to outside and the adjacent areas. This fresh air is routed through the emergency air cleanup trains.

*(3)* The control room electrical board rooms (EBR) air handling units continue to draw outside air to maintain the lower floor spaces at atmospheric pressure.

*(4)* The exhaust fan in the toilet rooms is stopped, and double isolation dampers are closed.

*(5)* The spreading room supply and exhaust fans are stopped and any operating battery room exhaust fan continues to run.

*(6)* Double isolation dampers in the spreading room supply duct and isolation dampers in the exhaust duct close.

*(7)* The Auxiliary Building Elevation 757 shutdown board rooms pressurizing air supply fans are automatically de-energized.

*(8)* Double isolation valves close to isolate the normal pressurizing supply to the MCRHZ.

MCRHZ isolation may be accomplished manually at any time by the control room operators.

The following building air-conditioning and ventilating system components are each provided with two 100% capacity units. Each meets the single failure criterion, and automatic switchover is assured if one of the units fails. These systems include the:

*(1)* MCR air-conditioning system, water chillers, air handling units, and piping.

*(2)* Control Building emergency air cleanup supply fans and filter assemblies.

*(3)* Control Building emergency pressurizing air supply fans.

The EBR air conditioning system is provided with two 100% capacity package water chillers and four 50% capacity air handling units with associated piping, valves, and controls. This system meets the single failure criterion, and automatic switchover is assured if one of the components fails.

Two existing isolation valves, 0-FCV-31-36 and 0-FCV-31-37, in the fresh air supply duct to the spreading room remain closed and the outlet is blanked off.

Fresh air for control room emergency pressurizing is taken from the outdoors from either of two intakes. One is the emergency air intake, located on the east end of the Control Building roof at Elevation 775 and the other is connected to the fresh air intake on the roof at the west end of the Control Building. Both intakes are isolated during a tornado warning.

All essential air-conditioning equipment, ventilating equipment, isolation dampers, and ducts are designed to withstand the safe shutdown earthquake (SSE). Nonessential components are seismically designed to the extent that they will not affect system operation if they should fail due to a seismic event. All air-conditioning and essential ventilating equipment are protected from the effects of a design basis tornado (Section 3.3.2), by isolation dampers located at all external openings to the Control Building. A

concrete hood located over the air intake provides additional protection from the effects of tornado generated missiles.

All air conditioning equipment necessary to ensure main control room habitability in the event of a flood is located in the Auxiliary and Control Buildings at elevations where the equipment remains functional during flooding up to the design basis flood elevation. The EBR air conditioning system is not required during a flood

Piping which could be a source of pipe whip (i.e., high energy lines) does not pass through areas containing essential Control Building air conditioning or air cleanup equipment. The equipment is also separated from and protected from potential sources of missiles and jet impingement which could adversely affect operation of the system. See Section 3.5.1.1.4 for further discussion on Control Buiding internal missiles.

System and component quality group classification for the Control Building heating, ventilating, air conditioning and air cleanup systems is commensurate with the importance to safety of the function performed by the systems. For further discussion of quality group classification refer to Section 3.2.2.

### 9.4.1.2 System Description

The Control Building HVAC, and air cleanup systems are shown on Figures 9.4-1, 9.4-2, and 9.4-3 and the logic and control on Figures 9.4-4, 9.4-4a, 9.4-5, 9.4-6 and 9.4-7 and consist of the following systems:

*(1)* MCR air-conditioning system

*(2)* EBR air-conditioning system.

*(3)* Control Building emergency air cleanup system.

*(4)* Control Building emergency pressurizing system.

*(5)* Battery room ventilating system.

*(6)* Miscellaneous ventilating systems.

The MCR air-conditioning system water chillers are located in the Auxiliary Building at Elevation 737.0. The associated air handling units are located in the Control Building in the mechanical equipment room at Elevation 755.0. The area served by this system includes the MCR, the relay room, the DPSO engineers shop, Control Building offices, the technical support center (TSC), conference rooms, kitchen, toilets, locker rooms, the mechanical equipment room and the NRC Office at Elevation 755.0.

The EBR air-conditioning system water chillers are located in the Control Building in the east mechanical equipment room at Elevation 692.0. The associated air handling units are located in the west mechanical equipment room at Elevation 692.0. Rooms served by this system include the battery board rooms, battery rooms, battery room

exhaust fan room, the communications room, the secondary alarm station at Elevation 692.0, and the computer and auxiliary instrument rooms at Elevation 708.0.

The communications room located on Elevation 692.0 has two nonsafety-related air conditioning units to supplement the electric board room air conditioning system. The units receive cooling water from the raw service water system. The units are provided with local controls.

The MCR air conditioning system is provided with two 100% capacity package water chillers, two 100% capacity fan-coil type air handling units, and associated pumps, piping, ductwork, and controls.

The EBR air conditioning system is provided with two 100% capacity package water chillers, four 50% capacity fan-coil type air handling units, and associated pumps, piping, ductwork, and controls.

Fresh air is drawn in from the air intake by the operating MCR air handling unit to replace that mechanically exhausted to the outdoors plus makeup for leakage in order to pressurize the MCRHZ.

Fresh air is drawn in by the operating EBR air handling unit and supplied to spaces on Elevations 692.0 and 708.0. System airflow balancing provides for makeup air which replaces that mechanically exhausted to the outdoors and maintains atmospheric pressure at these floors.

During normal and CRI operating modes, all MCRHS air, fresh and recirculated, is filtered by passing through an air handling unit containing a bank of filters. Filters associated with an inactive air handling unit are available for servicing.

During normal operations, all fresh air supplied to the air conditioning systems is heated by a thermostatically controlled duct heater to maintain spaces within design temperature limits. Additional electric heaters are located in air supply ducts serving the battery board rooms at Elevation 692.0; the auxiliary instrument and computer rooms at Elevation 708.0; and the relay room, TSC, Control Building offices, conference rooms, toilets, locker room and kitchen at Elevation 755.0. The above heaters are each thermostatically controlled to maintain room design conditions.

During normal operation, air is exhausted from the Control Building by the toilet and locker room exhaust fan, a spreading room exhaust fan, and a battery room exhaust fan. The spreading room supply fan transfers air from the mechanical equipment room on Elevation 755.0 to the spreading room. The makeup air and pressurizing air is drawn into the Control Building by the operating MCR and EBR air handling units. The air supply quantity is manually preadjusted by balancing dampers, as required, to maintain a minimum 1/8-inch positive static pressure in the main control room and atmospheric pressure in the remainder of the building, except the spreading room which is manually preset at a slight negative pressure relative to outdoors.

During a CRI, double isolation valves automatically close to terminate the normal supply of fresh air to the MCRHZ. The EBR air handling units continue to draw a

measured quantity of outside air to maintain the lower floors at approximately atmospheric pressure.

In the event of a single active failure which causes the MCRHZ pressure to drop below 1/8-inch water gage positive pressure, any of the four differential pressure switches activate an alarm in the MCR. The control room operator provides corrective action in the normal operating mode and has the option of starting the standby air handling unit. If there is a single failure during the isolation mode, the differential pressure switches automatically start the standby emergency pressurizing fan and its associated air cleanup unit to maintain the pressure in the MCRHZ. The switches also activate an alarm in the MCR.

The Control Building emergency air cleanup system is located within the mechanical equipment room at Elevation 755. This system is provided with two 100% capacity emergency air cleanup fans, and two 100% capacity air cleanup filter assemblies arranged in two parallel 100% capacity fan-filter trains. Refer to Section 6.5 for further information related to the emergency air cleanup units.

The emergency air cleanup system automatically operates upon a safety injection signal, indication of high radiation, or smoke concentrations in the building fresh air supply. This system can also be manually started from the MCR at any time. During an accident, both of the emergency air cleanup supply fans are started. Controls are provided to permit the control room operators to shut down either one of the air cleanup units and to keep it as a backup. The backup unit automatically starts in the event the operating unit fails.

During air cleanup system operation, a portion of the MCR air conditioning system return air is continuously routed through one or both of the air cleanup units and then to the system return air plenum. The cleaned air is thus recirculated to the MCR by the air-conditioning system. The system may be manually operated from the MCR at any time as required for periodic testing in accordance with the technical specifications filter testing program.

The Control Building emergency air cleanup fans are engineered safety features (ESF) equipment and are connected to separate divisions of the emergency power system.

The MCRHZ is pressurized with cleaned outdoor air during operation of the control room emergency air cleanup system. The minimum 1/8-inch positive pressure of the MCRHS area relative to the outdoors and adjoining spaces minimizes the inleakage of unprocessed air during the emergency mode. Section 6.4.3 discusses the three modes of system operation. The control room emergency pressurization system is provided with two 100% capacity emergency pressurizing air supply fans located within the mechanical equipment room Elevation 755. The fresh or pressurizing air is taken from either of two air intakes, one located on the Control Building roof at Elevation 775 near the east end of the building and the other located on the west end of the building. Each fan is duct-connected to an intake hood to provide two separate 100% capacity air supply systems. Air from each emergency intake is ducted to the associated emergency pressurizing fan. A cross-connection is provided just upstream of the fans

(refer to Figure 9.4-1) which allows either emergency pressurization fan to draw air from either emergency air intake if necessary. The manual damper in the cross connection is normally in the closed position. The damper, which is accessible from within the habitability area, is opened only if one of the emergency pressurizing fans has failed and contamination of the air intake associated with the non-failed fan is great enough to require air to be drawn from the other emergency intake. Determination of contamination level is discussed in Section 6.4.3.

Emergency pressurization air supply fans which discharge to the control room air-conditioning system return air upstream of the air cleanup filter assembly trains. The emergency pressurizing fans are the vaneaxial type with a capacity to deliver 711 cfm. These fans (one redundant) are ESF equipment and are connected to separate divisions of the emergency power system.

Both emergency pressurizing fans (100% redundant) are started by the same accident signal that starts the air cleanup units. The capability is provided to place either of the operating air cleanup units and the associated emergency pressurizing fans in the standby mode. The standby components start automatically in the event of a failure of the operating air cleanup unit or its emergency pressurizing fan.

During non-tornado operation, power is removed from tornado isolation dampers 0–FCO-31-21 and 0-FCO-31-34, which are located in the ductwork connected to the two fresh air intakes. The dampers' control circuits remain de-energized during all plant conditions, except tornado warning, to preclude the possibility of a single failure in their control circuit isolating both air intakes.

The battery rooms ventilation system consists of two 100% capacity and one reduced capacity exhaust fans. The fans are located on the Elevation 692.0 floor with the two 100% capacity fans located near the west end of the building and the other fan located in the east mechanical equipment room.

Fire dampers provided in each room's air exhaust duct and air supply opening operate to isolate the room upon high temperature due to fire.

The battery room ventilation system is required to operate at all times except during the design basis flood and during a 72-hour period following a fire. A standby fan automatically starts upon failure of the operating fan to produce airflow. The battery room fans are ESF equipment and are connected to the emergency power system. The reduced capacity exhaust fan C-B is normally unpowered, but can be manually started if needed to control hydrogen in the battery rooms.

The spreading room is ventilated by one of two 100% capacity exhaust fans (one being on manual standby) located at the east end of the spreading room at Elevation 729.0. One spreading room supply fan, located in the mechanical equipment room at Elevation 755.0, supplies air from the mechanical equipment room. Because the spreading room is maintained at a slight negative pressure during normal operation, some air enters via leakage from the MCR and the electrical board room areas.

The spreading room supply and exhaust fans are nonsafety-related and are not connected to the emergency power system. During MCR isolation, the spreading room fans are automatically shut off and isolation dampers closed.

The mechanical equipment room at Elevation 755.0 is normally ventilated by the passage of air-conditioning system supply air from the system air handling unit.

The mechanical equipment room at Elevation 692.0 is ventilated at all times with air supplied by the EBR air-conditioning system supply and with air drawn through the room to the air-conditioning return air duct.

The kitchen, toilet, and locker rooms at Elevation 755.0 are ventilated by exhausting a portion of the MCRHZ conditioned air through the rooms. The toilet and locker room exhaust fan is located in the Elevation 755.0 mechanical equipment room and discharges directly to the outdoors.

The toilet and locker rooms exhaust fan is nonsafety-related and is not connected to the emergency power system. During MCR isolation the toilet and locker room exhaust fan is automatically shut down, and double isolation dampers close.

Dampers used to isolate the MCRHZ area from the outside and from portions of the ventilation systems serving other areas of the Control Building are low leakage type dampers. They are heavy-duty dampers provided with resilient seals along the blade edges. These dampers close following detection of high levels of radiation, concentrations of smoke, or receipt of an isolation signal. Refer to Section 6.4 for further information regarding damper leakage.

#### 9.4.1.3 Safety Evaluation

The Control Building air-conditioning systems are ESF. Each pair of full-capacity (one redundant) water chillers and each redundant set of air handling units is served from a separate train of the emergency power system and from a coordinated separate loop of the essential raw cooling water system (ERCW). Upon loss of offsite power, emergency power to the MCR and EBR chiller packages is automatically reestablished in sequence by the diesel generator in accordance with FSAR Table 8.3-3. The failure modes and effects analysis presented in Table 9.4-7 verifies the capability of the system to maintain acceptable environmental conditions within the Control Building during any mode of system operation following any single active failure.

All MCR equipment operates normally at an ambient temperature of 75°F. Abnormal excursions of short duration (12 hours or less) to 104°F maximum and 60°F minimum may occur without adverse effects on the equipment. Loss of ventilation is discussed further in Section 3.11.6.

The air cleanup equipment installed to purify air supplied to the MCRHZ during emergencies is classified as an ESF air cleanup system. Good general agreement with Regulatory Guide 1.52 standards for air cleanup equipment is achieved. Details on this compliance are given in Table 6.5-4.

Each of the Control Building emergency air cleanup units consists of a bank of HEPA filter cells and a bank of carbon adsorber modules. Test connections and appropriate instrumentation are also provided for each air cleanup unit. For further details refer to Section 6.5.1.

Filter banks are provided in the suction-side of each MCR and EBR air handling unit.

For discussions on radioactivity dose levels and detection of airborne contaminants, refer to Section 12.4 and 12.3.4.

Tornado dampers are provided to isolate the Control Building HVAC outside air intakes during a tornado warning. The isolation is provided upon damper closure during either normal system operation or MCR Isolation. The loss of MCRHZ pressurization during this time will not result in contaminated air leaking into the MCRHZ since a LOCA is not postulated concurrent with a tornado.

The only heating, ventilating, and air conditioning required in the Control Building in the event of a flood above plant grade is for the Elevation 755.0 rooms, including the MCR. Equipment used during the flood mode operation includes the MCR air-conditioning subsystem components on Control Building Elevation 755.0 and the water chillers and the chilled water circulating pumps on Auxiliary Building Elevation 737.0. Equipment located at floor Elevation 755 of the Control Building is unaffected by the design basis flood. The water chillers and chilled water circulating pumps serving the MCR air handling units located in the Auxiliary Building at floor Elevation 737 are functional for floods up to the design basis flood level. Refer to Section 2.4.14 for additional discussion of the plant flood protection plan.

### 9.4.1.4 Tests and Inspection

Historical Information: The system was tested initially as part of the preoperational test program (Chapter 14.0)

The Control Building air-conditioning systems are in continuous operation and are accessible for periodic inspection. After maintenance or modification activities that affect a system function, testing is done to reverify the system or component operation.

The building emergency pressurizing air supply fans and air cleanup assemblies are tested periodically. Details of the testing program for the air cleanup units are included in Section 6.5.

Details of the radiation monitors are included in Section 11.4.

The battery rooms ventilating system is in continuous operation. The exhaust fans are accessible for periodic inspection.

## 9.4.2 Fuel Handling Area Ventilation System

### 9.4.2.1 Design Bases

The fuel handling area ventilation system, a subsystem of the Auxiliary Building ventilating system, serves the fuel-handling area at Elevation 757, the penetration rooms at Elevation 737,Elevation 757 and Elevation 782, and the fuel, waste, and cask handling areas at Elevation 729 and Elevation 692.

The system is designed to: (1) maintain acceptable environmental conditions for personnel access, operation, inspection, maintenance, and testing, (2) protect mechanical and electrical equipment and controls, and (3) limit the release of radioactivity to the environment during all weather conditions. The environmental control system is designed to maintain building temperatures between 60°F minimum and 104°F maximum.

During accident conditions, the fuel handling area ventilation system is shut down and all environmental control is handled by the Auxiliary Building gas treatment system (ABGTS), described in Section 6.2.3.

All ductwork, dampers, and grilles of the fuel handling area ventilation system essential to operation of the ABGTS are designed to Seismic Category I and Safety Class 2b requirements. Each fueling handling area exhaust fan is provided with a primary circuit breaker and a shunt trip isolation switch which is tripped by a signal of the opposite train from that for the primary circuit breaker to ensure that power is isolated from the fan. All other system components, including exhaust fans and remaining ductwork and dampers, are designed to Seismic Category I(L) requirements.

To control airborne activity, ventilation air is supplied to clean areas, then routed to areas of progressively greater contamination potential. The fuel handling area is maintained at a slightly negative pressure to limit outleakage, and can be physically isolated from the outdoors in case of radiological contamination.

Air utilized to ventilate the fuel handling area, waste packaging, and cask shipping areas is exhausted through the fuel handling area exhaust fans. An exhaust duct system from the waste packaging area and cask loading area is connected to a duct system around the periphery of the spent fuel pit and fuel transfer canal. Thus, exhaust air from the fuel handling area passes across the spent fuel pit forming an air curtain across the pool. During periods of irradiated fuel movement in the fuel transfer canal, air curtain exhaust flow at the fuel transfer canal area is required to be interrupted. The fuel transfer canal exhaust flow is isolated to prevent the uptake of source terms emitted during a postulated fuel handling accident in the fuel transfer canal and to support proper spent fuel pool accident radiation monitor operation.

Exhaust is provided by two 100% capacity fuel handling area exhaust fans. During normal operation one fan is in operation with the other on standby. Both fans discharge to the Auxiliary Building exhaust stack.

An inlet damper furnished with each fuel handling area exhaust fan is used to regulate the volume of air exhausted as required to maintain a 1/4 inch negative pressure within the building. These dampers are automatically operated by static pressure controllers.

During periods of high radiation in the fuel handling area or upon initiation of a containment isolation signal, or for high air temperature at the supply intake the Auxiliary Building supply and exhaust fans and the fuel handling exhaust fans are automatically stopped and isolation dampers located in the ducts that penetrate the Auxiliary Building Secondary Containment Enclosure (ABSCE) are closed. Additionally, during refueling operations when containment and/or the annulus is open to the Auxiliary Building ABSCE space, a Containment Vent Isolation (CVI) signal will automatically stop the above described fans and close the same isolation dampers as described above. Sinilarly, the high radiation signal in the fuel handling area can also automatically initiate a CVI during refueling operations when containment and/or the annulus is open to the Auxiliary Building ABSCE spaces.

An isolation barrier is thus formed between the building and the outdoor environment, and the Auxiliary Building gas treatment system (ABGTS) is started up automatically (see Section 6.2.3) to maintain the ABSCE at less than a 1/4-inch water gauge negative pressure during these high radiation or accident periods.

The fuel-handling area ventilation system is located completely within Seismic Category I structures and all safety-related components are fully protected from floods and tornado-missile damage.

### 9.4.2.2 System Description

The fuel-handling area ventilation system is shown on Figure 9.4-8, on logic Figures 9.4-9 and 9.4-10, and on control Figures 9.4-11 and 9.4-17.

The fuel-handling area is supplied with outdoor air from the Auxiliary Building general ventilation air supply system, described in Section 9.4.3. All supply air is ducted to clean areas of the fuel-handling area from where it flows to areas of progressively greater contamination potential before being exhausted through a duct system by the exhaust fans. The fuel-handling area exhaust fans are capable of being connected to emergency power.

The cask decontamination area on Elevation 729 is ventilated by a separate supply fan which circulates air through the area when the decontamination room is in use. This air flow assures an acceptable environment for motor reliability and preservation.

The cask decontamination room is kept under negative pressure at all times since the room is connected to the fuel handling area exhaust ductwork.

### 9.4.2.3 Safety Evaluation

A fuel handling accident in the Auxiliary Building is detected by the two gamma radiation detectors mounted above the fuel pool, as shown in Figure 9.4-12. The high radiation signals via redundant trains will then shut off the fuel handling and Auxiliary Building general supply and exhaust fans and start the ABGTS, as shown in Figures

9.4-9 and 9.4-10. To accomplish its safety function following a fuel handling accident, the fuel handling area ventilation system must accomplish the following functions:

*(1)* Isolate the normal ventilation pathways between the spent fuel pool and the environment.

*(2)* Filter the contaminants out of the air by the ABGTS before exhausting it to the environment.

The two redundant radiation monitors (safety-related) located above the spent fuel pit assure that the accident is promptly detected and that a high radiation signal is provided to each ventilation train, even if one monitor fails. Also,during refueling operations when containment and/or the annulus is open to the Auxiliary Building ABSCE spaces, a Containment Vent Isolation (CVI) signal is procedurally configured to assure that a fuel handling accident in containment is promptly detected and the CVI signal is provided to each ventilation train.

In addition, the Auxiliary Building radiation monitor (non-safety related) which monitors the Auxiliary Building exhaust vent is also capable of providing a high radiation signal to the MCR.

A high radiation signal from either of the monitors located above the spent fuel pit or a CVI signal whenever containment and/or the annulus is open to the Auxiliary Building ABSCE spaces during refueling operations causes the fuel handling area (FHA) and Auxiliary Building general supply and exhaust fans to shut down and their associated dampers to close, as shown in Figures 9.4-9 and 9.4-10. Each of the two FHA exhaust fans has both train A and train B dampers, to ensure building isolation in the event of one damper's failure to close. As an added safety feature, all ABSCE boundary isolation dampers are designed to fail-closed on loss of instrument air or electrical power.

These two monitors also start the ABGTS upon detection of a high radiation signal in the Auxiliary Building spent fuel pool area. See Section 6.2.3 for a further analysis of the ABGTS.

From the study of anticipated failure modes and the analysis of their associated effects, it has been determined that the safety-related portions of the system are capable of functioning in spite of the loss of any active component. See Tables 9.4-8, 9.4-8A, and 9.4-8B for a detailed failure modes and effects analysis (FMEA) on the Auxiliary Building (including fuel handling area) HVAC system.

During normal operation the fuel handling areas are continuously maintained at a slightly negative pressure relative to outdoors to minimize outleakage.

During periods of high radiation or upon initiation of an Auxiliary Building isolation signal, the ABSCE , which includes the fuel handling areas, is maintained at a nominal

1/4-inch water gauge negative pressure by the ABGTS. See Sections 9.4.3 and 6.2.3 for further information.

#### 9.4.2.4 Inspection and Testing

*Historical Information: The system is tested initially as part of the preoperational test program.*

The fuel handling area ventilation system is in continuous operation and is accessible for periodic inspection. After maintenance or modification activities that affect a system function, testing is done to reverify the system or component operational/functional integrity.

Details of the radiation monitors are included in Section 11.4.

See Section 6.2.3.4 for inspection and testing requirements for the ABGTS.

### 9.4.3 Auxiliary Building and Radwaste Area Ventilation System

#### 9.4.3.1 Design Bases

The Auxiliary Building ventilating systems serve all areas of the Auxiliary Building including the fuel handling area (see Section 9.4.2) and the radwaste areas. Separate subsystems are utilized for the environmental control of the shutdown board rooms, auxiliary board rooms, and other miscellaneous rooms and laboratories. The ventilating systems also incorporate individual cubicle coolers to provide supplementary cooling to specific safety feature equipment.

The Auxiliary Building ventilating systems are designed to: (1) maintain acceptable environmental conditions for personnel access, operation, inspection, maintenance and testing, and for protection of mechanical and electrical equipment and controls, and (2) control airborne activity during outside environmental conditions as stated on the Environmental Data drawings.

The shutdown board, auxiliary control, and battery board rooms at Elevation 757 and the auxiliary board and battery rooms at Elevation 772 are cooled by mechanical refrigeration to maintain the room temperatures within the range for which the equipment is environmentally qualified.

To control airborne activity, ventilation air is supplied to clean areas, then exhausted through areas of progressively greater contamination potential. Ventilation system design ensures that the areas of the building which are subject to radioactive contamination are maintained at a slightly more negative pressure to limit outleakage. All exhaust air from the Auxiliary Building is routed through a duct system, and is discharged past a radiation monitor and into the Auxiliary Building exhaust vent, except the shutdown board rooms, auxiliary control room, battery board rooms on Elevation 757, and auxiliary board rooms, battery rooms, and transformer rooms on Elevation 772, which are not tied to the Auxiliary Building exhaust.

Upon indication of high radiation in the fuel handling area of the Auxiliary Building, high temperature in the Auxiliary Building air intake(s), or upon a safety injection signal from either reactor unit, the Auxiliary Building supply and exhaust fans are automatically stopped and isolation dampers located in the ducts which penetrate the ABSCE are closed to complete the isolation barrier. In addition, a containment vent isolation signal during fuel handling operations with containment and/or the annulus open to the Auxiliary Building ABSCE spaces will result in the above actions. Two 100% capacity gas treatment system filter trains consisting of air heaters, prefilters, HEPA filters and carbon adsorbers, are automatically energized and a reduced quantity of building exhaust is diverted through the filter trains and discharged into the Shield Building exhaust vent (see Section 6.2.3). The exhaust vent is located within the annulus space of the Reactor Building and extends to the top of the Reactor Building.

Upon detection of smoke in the Auxiliary Building air intake rooms (Units 1 and 2), the affected unit's Auxiliary Building general ventilation air supply fans are automatically stopped and their isolation dampers closed.

The HVAC components in the shutdown board rooms, auxiliary board rooms, shutdown transformer rooms, ABGTS, and Auxiliary Building ESF coolers, associated ductwork and piping are designed to Seismic Category I requirements. Other parts of the Auxiliary and Radwaste Area ventilation system are designed to meet Seismic Category I(L) requirements.

For safety-related portions of the system, components are designed to assure that a single active failure cannot result in the loss of a safety-related function. This is accomplished by using 100% redundancy where required as described in the following sections. The Auxiliary Building is structurally designed to resist damage by missiles, either internally or externally produced. Specific design considerations for missile protection are also described in the following subsections.

### 9.4.3.2 System Description

The Auxiliary Building ventilation systems are shown on Figures 9.4-13, to 9.4-16, on logic Figures 9.4-9 and 9.4-10, and on control Figures 9.4-11 and 9.4-17. The auxiliary and radwaste area ventilation systems consist of the following subsystems:

*(1)* Building air supply and exhaust system (general ventilation)

*(2)* Building cooling system (chilled water)

*(3)* Safety features equipment coolers

*(4)* Shutdown board room air-conditioning system

*(5)* Auxiliary board and battery room air-conditioning system

*(6)* Shutdown transformer room ventilation system

*(7)* Miscellaneous ventilation and air-conditioning system

### 9.4.3.2.1 Building Air Supply and Exhaust Systems (General Ventilation)

The Auxiliary Building air supply system filters 100% of outdoor air through a bank of filters for each of two mechanical equipment rooms located at opposite ends of the building at Elevation 737.0.

Ventilation supply air is heated or cooled at the air intake, as needed, to maintain suitable temperatures in the Auxiliary Building general spaces, for equipment protection and personnel comfort during normal operation.

The air supply system utilizes four 50% capacity supply fans, two being located in each of the two mechanical equipment rooms at Elevation 737.0. During normal operation, one fan in each equipment room is in operation with the other fan in the standby mode.

Supply air is ducted to various clean or accessible areas of the Auxiliary Building from which it flows to areas of progressively greater contamination potential before being exhausted through a duct system by the building exhaust fans. In the event of a fuel-handling accident, radiation monitors in the vicinity of the spent fuel pool initiate an Auxiliary Building isolation (ABI) signal which stops the building ventilation system and starts the ABGTS fans (see Sections 9.4.2 and 6.2.3). An ABI signal can also be initiated manually. In addition, during fuel handling operations when the containment and/or the annulus is open to the Auxiliary Building ABSCE spaces, a high radiation signal from the spent fuel pool radiation monitors will result in a containment ventilation isolation (CVI) along with an Auxiliary Building isolation and ABGTS start. Further, a CVI signal, including a CVI signal generated by a high radiation signal from the containment purge air exhaust radiation monitors, will initiate an Auxiliary Building isolation and start of ABGTS. These actions will ensure proper operation of the ABSCE.

The building supply air is provided by centrifugal fans located downstream of the heating/cooling coils. These fans which operate only during normal operating conditions, are not engineered safety features.

The general exhaust air from the Auxiliary Building is provided by four exhaust fans each rated at 50% of system capacity. These fans are located on the roof of the Auxiliary Building and discharge into the Auxiliary Building exhaust stack.

An inlet damper in series with each Auxiliary Building exhaust fan is used to regulate the volume of air exhausted as required to maintain the required negative pressure within the building with respect to the outside environment.

The isolation dampers and the ductwork between these dampers that make up part of the ABSCE are designed to the requirements of Safety Class 2b and Seismic Category I. For the exhaust fans, the trip circuits for the primary circuit breaker and the shunt trip

isolation switch arranged in series with the primary circuit breaker are designed as Class 1E. All other portions of this system are Seismic Category I(L).

#### 9.4.3.2.2 Building Cooling System (Chilled Water)

The purpose of the Auxiliary Building chlled water cooling system is to supplement the general ventilation system and to maintain temperatures within design limits in the general spaces of the Auxiliary Building during normal plant operating conditions. The cooling system consists of two 100% capacity packaged water chillers, two 100% capacity primary loop circulating pumps, two 100% capacity secondary loop circulating pumps, heating/cooling coils, fan-coil type air handling units, and associated piping, ductwork, and controls.

#### 9.4.3.2.3 Safety Feature Equipment Coolers

The safety feature equipment coolers are described in Section 9.4.5.3.

#### 9.4.3.2.4 Shutdown Board Room Air-Conditioning System

Shutdown board rooms are located on Elevation 757.0 of the Auxiliary Building with a firewall separating Units 1 and 2 equipment. The electrical boards for either unit can provide the service necessary for the safe shutdown of both plant units following an accident in either unit. Environmental control is provided by four fan-coil air–handling units supplied with chilled water from two 100% redundant water chillers.

Environmental control for the auxiliary control room is maintained by the SDBR air-conditioning system. The four SDBR air-handling units are arranged so that each shutdown board room and battery board room is cooled by either of two redundant (train A or B) air-handling units. Each pair of Train A and Train B units is located in its respective reactor unit's mechanical equipment room. The air distribution system is arranged such that the auxiliary control room is cooled by two of the four fan-coil units from different equipment rooms. Four unit heaters provide heating as required to maintain the minimum design ambient conditions. Each SDBR air-conditioning system is connected to an emergency power source and rejects heat to the ERCW system.

Upon loss of offsite power, emergency power to both SDBR air-conditioning system chillers is automatically re-established in sequence by the diesel generator in accordance with FSAR Table 8.3-3. One of the two redundant chillers is normally operating and the other is in standby. The standby chiller starts if the operating chiller fails. The SDBR air-conditioning system is designed to meet Safety Class 2b and Seismic Category I requirements.

Each of two pairs of 100% capacity pressurizing fans is designed to maintain the SDBRs at a slight positive pressure with respect to the outdoors.

Each of the two air-handling units and each of the two pressurizing air supply fans serving one set of SDBRs is powered by different power trains.

Redundant tornado dampers are installed in the Elevation 757 shutdown board room pressurizing supply fan ductwork which extends to Elevation 772; this ductwork is designed for a pressure differential of 3 lb/inch$^2$. In addition, ductwork penetrating the Elevation 757 personnel and equipment access rooms from the emergency gas treatment system and blowdown treatment rooms is designed for 3 lb/inch$^2$. Thus, the Elevation 757 electrical equipment areas are protected from tornado-induced depressurization.

### 9.4.3.2.5 Auxiliary Board Rooms Air-Conditioning Systems

The Auxiliary Building electrical boards, located on floor Elevation 772.0, are separated into two sub-areas per unit corresponding to Train A and Train B emergency power. Four separate air-conditioning systems are provided, one to serve each of the four board room sub-areas. Train B areas which contain both Train A and Train B electrical equipment are cooled by Train A and Train B air conditioning subsystems. Following an accident, the electrical boards in either sub-area have the capability to support a safe shutdown of the unit. Because each sub-area is served by an attendant air-conditioning system sized to remove 100% of the heat produced by electrical equipment in that sub-area, full redundancy is provided.

The Train A air-conditioning equipment located within the Elevation 772.0 mechanical equipment room and the Train B air-conditioning equipment located on the roof above are provided structural protection from environmental hazards, including tornado missiles, and floods. The system is also designed to meet Safety Class 2b and Seismic Category I requirements.

Each board room air-conditioning system contains a refrigerant compressor, air-cooled condenser, fan-coil air handling unit with direct expansion cooling coils, two 100% pressurizing air supply fans, air supply distribution system and control and safety devices.

Two 100%-capacity roof ventilator exhaust fans located on the roof of each of the four separate battery rooms on Elevation 772.0 provide continuous ventilation to prevent the possible accumulation of dangerous hydrogen gas.

The two 100%-capacity pressurizing air supply fans per air-conditioning system serve a twofold purpose. One is to replace a portion of air-conditioning system air exhausted through the battery room and the other is to pressurize the electrical board room to prevent infiltration of contaminated air. The mixture of this makeup air and board room return air is conditioned upon passing through the air handling unit.

One pressurizing air supply fan and one battery room exhaust fan in each individual air-conditioning system are connected to Train A electric power, and the remaining fans are connected to Train B power. Control system interlocks provide simultaneous operation of the pressurizing air supply fan and battery room exhaust fan. The availability of this fan combination on either power train ensures continuous ventilation in each battery room regardless of operability of the direct-expansion air-conditioning equipment. In the event of air-conditioning system failure, pressurizing fan air is drawn through the normal board room supply ducts by the battery room exhaust fan.

Condensing unit cooling air for the Train A air-conditioning system of each plant unit is routed from intakes located on the roof at Elevation 786, through the condenser, and discharged through a roof-mounted exhaust housing. The Train B system condenser cooling air is drawn through an intake on the side of the equipment housing on the roof and is discharged through an exhaust opening atop the equipment housing.

Each Train A and each Train B room air conditioning system air handling unit is designed to maintain the room temperature within the range for which the equipment is environmentally qualified. The minimum temperature is 50°F for the board rooms and the battery rooms. The maximum temperature for each room is 104°F. This ensures that the equipment and components are not exposed to environmental conditions that could degrade the operability of safety-related equipment.

Each battery room exhaust fan has a damper capable of withstanding pressure differentials imposed by tornado conditions. The dampers are mounted below the fans at Elevation 786.0. Small ventilation holes are provided in each damper frame between the exhaust fan and the damper to allow continuous venting of hydrogen gas even when the damper is closed. Each of these dampers is interlocked with its respective exhaust fan such that it will provide isolation of the fan when it is not operating. These dampers are locally operated and will automatically close when the exhaust fans are turned off upon tornado warning.

The fifth vital battery room exhaust fans also have dampers capable of withstanding pressure differentials imposed by tornado conditions. The dampers are mounted below the Elevation 786.0 between the ceiling and the in-line fan.The fifth vital battery room is cooled by air which is drawn from the 480 V Board Room 1A through an opening in the common partition wall at the “T” line and is exhausted directly to the outside. This configuration is similar to that of the four battery rooms discussed above, with the exception that the exhaust fans are in-line axial fans and are located in the room. The cooling system is designed to maintain temperatures in this room within the range of 50°F to 104°F, and for continuous venting of hydrogen gas.

#### 9.4.3.2.6 Shutdown Transformer Room Ventilating Systems

The shutdown transformers, located on Elevation 772.0, are located in Unit 1 and Unit 2 sub-areas. Each one of these two sub-areas contains three Train A, three Train B and one nondivisional transformers.

Outside air enters each sub-area through air intake structures located on the Auxiliary Building roof. Each roof-mounted exhaust ventilator is energized from the same train of the emergency power system that supplies power to the transformer for which it provides ventilation. Exceeding the temperature setpoints in a room automatically starts the exhaust fans, and open the air operated dampers in the two air intake structures. Manually starting the exhaust fans also opens the air-operated dampers in the two air intake structures.

Electric motor-driven centrifugal-type roof exhaust fans in the individual transformer rooms are staged by thermostatic control to maintain the transformer temperatures within the range for which the safety-related equipment is environmentally qualified.

The pneumatically-operated air intake dampers have the capability of being manually powered to the open position without regard to thermostatic control by starting a fan.

This ventilation system is designed to maintain the temperature in the transformer rooms within the range 19°F minimum and 110°F for which the equipment is environmentally qualified.

The system is designed to meet Safety Class 2b and Seismic Category I requirements.

#### 9.4.3.2.7 Auxiliary Building Miscellaneous Ventilation and Air Conditioning Systems

The control rod drive equipment room design temperature limits are maintained by two 100% capacity non-safety related air-conditioning units located in each room. During normal operation, one of the air-conditioning units in each room is in operation with the other on standby. Each unit is automatically controlled by a self-contained thermostat. Electric unit heaters are located in each room to provide heating during cold weather.

The hot instrument shop is cooled by a chilled water cooling coil which utilizes 100% makeup air to prevent the recirculation of any contaminants. The hot instrument shop exhaust is provided by a lab exhaust hood which is connected to the general building exhaust duct system.

The sample room is ventilated by five lab hoods, each with an exhaust fan. Air enters the sample room through doors with transfer grilles and back draft dampers. Each hood is provided with a separate exhaust fan and HEPA filter assembly. A differential pressure gauge is used to indicate the need for filter replacement. Each hood exhaust fan discharges into the general building exhaust system.

The Additional Equipment Buildings are cooled by non–safety related packaged air-conditioning units.

The Reactor Building steam valve rooms are cooled by independent ventilation systems, each consisting of two roof mounted exhaust fans. (See Failure Modes and Effects Analysis in Table 9.4-10).The fans draw outside ventilation air for room cooling through a wall opening near the floor. Space temperature is controlled by dampers which modulate airflow in response to a wall mounted thermostat. The exhaust fans operate until a low temperature setpoint is reached when the fans automatically stop.

### 9.4.3.3 Safety Evaluation

Functional analyses and failure modes and effects analyses have shown that the auxiliary and radwaste area ventilation system has the capabilities needed for normal operations and for accident mitigation. These are described in the sections that follow.

#### 9.4.3.3.1 Auxiliary Building General Ventilation System

A functional analysis of the general ventilation system shows that:

*(1)* Adequate ventilation is provided to achieve acceptable air flow patterns needed for airborne activity control. See Section 9.4.3.2.1.

*(2)* There are three different signals that will automatically cause the system to change from the normal operating mode to the accident mode, the Phase A containment isolation signal, the high temperature signal from the Auxiliary Building air intakes, and the high radiation signal from the fuel handling area radiation monitors. Either a Train A or a Train B signal from any of these sources will cause the system to change to the accident mode of operation.

*(3)* Ventilation fan operations cease and isolation dampers in the intake and exhaust ducting close in the accident mode of operation. Air flow patterns and air cleanup operations appropriate for accident mitigation during the accident mode of operation are established and maintained by the ABGTS. See Section 6.2.3 for further information.

*(4)* A smoke detection signal from either the Unit 1 or the Unit 2 Auxiliary Building air intake, will shut down that unit's supply fans and close their discharge isolation dampers.

*(5)* During normal mode operations, substandard airflow are detected by a low flow sensor and this sensor signals the MCR for operators to verify automatic start up of fan(s). Each redundant Auxiliary Building general ventilation supply and exhaust fan is automatically started upon low flow detection of the operating fan.

The failure modes and effects analyses performed on safety related systems interfacing with the general ventilation system have shown that:

*(1)* A failure of any one of the two radiation monitors above the spent fuel pool does not prevent a high radiation signal from being relayed to necessary isolation components.

*(2)* A failure of the whole or any part of either Train A or Train B components to complete isolation does not prevent total isolation. Each supply and exhaust line to the environment is equipped with both Train A and Train B low leakage isolation dampers.

*(3)* Essential portions of the system remain functional after a seismic event because of their design to Seismic Category I requirements. Nonessential portions of the system and other systems located close to essential

components and not designed to Seismic Category I standards are designed to Seismic Category I(L) standards to prevent their failure from precluding operation of essential system components.

*(4)* All essential isolation valves and their associated ductwork are located above the maximum flood level in a Seismic Category I building that is designed to resist damage by tornado missiles.

*(5)* A loss of power causes closure of the isolation dampers by virtue of their fail-safe design (closed when unpowered). Preferred air flows will be maintained by the ABGTS.

#### 9.4.3.3.2 Building Cooling System

This system serves no safety-related function. The air handling units and their associated piping, valves, ductwork, and dampers are all designed to Seismic Category I(L) requirements to prevent their failure from endangering safety-related equipment.

#### 9.4.3.3.3 Safety Feature Equipment Coolers

This system is discussed in Section 9.4.5.3.

#### 9.4.3.3.4 Shutdown Board Room Air-Conditioning System

A functional analysis of the shutdown board room air-conditioning system shows that:

*(1)* During all modes of operation, the system will maintain adequate air temperatures to assure optimum operation of the safety-related equipment it serves. See Section 9.4.3.2.4.

*(2)* There are redundant pressurizing air supply fans serving each of the two sub-areas to maintain a slightly positive pressure in the shutdown board areas to minimize contaminated inleakage.

The failure modes and effects analyses provided in Table 9.4-9 has shown that:

*(1)* During all operational modes, substandard cooling or pressurizing air flows are detected by local sensors and a corresponding warning is provided to the main control room.

*(2)* A failure of one air handling unit initiates the startup and loading of the standby redundant unit.

*(3)* The failure of one of the two pressurizing air supply fans serving each shutdown board area is detected by local sensors and a signal is provided to activate the standby redundant fan.

*(4)* The essential components of the system are designed to Seismic Category I standards to assure that they remain functional after a seismic event.

(5) All components of this system are located above the maximum probable flood level and are in a Seismic Category I building that is designed to resist damage by tornado missiles.

(6) Electrical components of this system are powered by one of two trains of emergency electrical power to ensure their operability upon loss of offsite power.

### 9.4.3.3.5 Auxiliary Board Rooms Air-Conditioning System

A functional analysis of the auxiliary board rooms air-conditioning system shows that:

(1) During all modes of operation, the system maintains adequate air cooling to assure optimum operation of the safety-related equipment it serves. See Section 9.4.3.2.5.

(2) Two redundant pressurizing air supply fans serve each of the four sub-areas to maintain a slightly positive pressure in the sub-area to minimize contaminated inleakage.

(3) The four battery rooms receive continuous ventilation air supplies to prevent any accumulation of hydrogen gas.

The failure modes and effects analysis in Table 9.4-5 has shown that:

(1) During all operations, substandard cooling or pressurizing air flows are detected by local sensors and a corresponding warning is provided in the main control room.

(2) Failure of the air handling unit serving one of the two sub-areas per plant unit does not prevent the remaining sub-area and its air handling unit from accomplishing all the safety-related functions of the auxiliary board area for that unit. Essential Train A electrical equipment located in the Train B 480V board rooms is spot cooled by the Train A HVAC system, assuring it's operability should the Train B HVAC system fail.

(3) The failure of one of the two pressurizing air supply fans serving each of the four auxiliary board sub-areas is detected by local sensors and a signal is provided to activate the standby redundant fan.

(4) A battery room exhaust fan failure causes automatic activation of the standby exhaust fan and activates an alarm in the MCR. If the air supply to a battery room from the corresponding air handling unit is lost, air is provided by the associated pressurizing air supply fan.

(5) Essential portions of the system are designed to Seismic Category I standards to assure that they remain functional after a seismic event. Nonessential portions of this system and other systems located close to

essential components are designed to Seismic Category I(L) requirements to prevent their failure from precluding operation of essential system components.

*(6)* All components of this system are located above the maximum probable flood level and are in a Seismic Category I building that is designed to resist damage by tornado missiles.

*(7)* Upon a loss of offsite power, all essential functions provided by this system are powered by two trains of emergency electrical power.

### 9.4.3.3.6 Shutdown Transformer Room Ventilating System

A functional analysis of the shutdown transformer room ventilating system shows that adequate ventilation air flow is provided to the transformer rooms to maintain environmental conditions conducive to optimum transformer operation.

The failure modes and effects analyses in Table 9.4-6 indicate that:

*(1)* Failure of one or more fans in each room results in room temperature rise which is detected by temperature sensors located in the room. This alerts the operators to activate other available exhaust fans in the same room to replace the damaged unit(s).

*(2)* Loss of flow through one of the two intake structures serving each transformer room would be no safety concern since the second intake opening also opens (both intake structures open simultaneously).

*(3)* All required portions of this system are designed to Seismic Category I requirements to assure that they remain functional after a seismic event. Other components, and systems, located close to this system are qualified to either Seismic Category I or I(L) standards; therefore, their failure can not preclude operation of this system.

*(4)* All components of this system are located above the maximum probable flood level and are in a Seismic Category I building that is designed to withstand the effects of tornado missiles. Where components are subject to tornado-generated missile damage, operator actions have been defined in the event of damage.

*(5)* In the event of a loss of offsite power, emergency electrical power is provided to the transformers and their associated exhaust fans. One of the two sub-areas serving each unit is provided with Train A power and the other with Train B power.

#### 9.4.3.3.7 Auxiliary Building Miscellaneous Ventilation and Air-Conditioning System

The miscellaneous ventilation and air-conditioning systems do not perform a safety function, however, the system components are designed to seismic category I(L) as necessary for the protection of safety related features.

The main steam valve vault ventilation exhaust airflow is regulated to maintain an adequate temperature environment for the main steam safety valves. During low temperature conditions, the exhaust fans are shutdown and electric heating is provided. The ambient temperature in the valve vault is periodically monitored in accordance with the Technical Requirements Manual area temperature monitoring program.

### 9.4.3.4 Inspection and Testing Requirements

*Historical Information: The system is tested initially as part of the preoperational test program. See Section 14.2 for testing acceptance criteria.*

The Auxiliary Building environmental control systems are in continuous operation and are accessible for periodic inspection. After maintenance or modification activities that affect a system function, testing is done to reverify the system or component operation.

See Sections 6.2.3.4 and 9.4.5.3.4 for inspection and testing requirements of the ABGTS and the ESF coolers.

Details of the radiation monitors are discussed in Section 11.4.

## 9.4.4Turbine Building Area Ventilation System

### 9.4.4.1 Design Bases

The turbine building heating, cooling and ventilating systems are designed to maintain an acceptable building environment for the protection of plant equipment and controls; for the comfort and safety of operating personnel; and to allow personnel access for the operation, inspection, maintenance, and testing of mechanical and electrical equipment. The areas served by these systems are not considered potentially radioactive because the reactor is of the pressurized water type which does not normally produce radioactive steam. Potential sources of radioactivity were not, therefore, considered in establishing air flow paths, and the air flows are not monitored for radiation. For additional information on facility design features for radiation protection, refer to Section 12.3.1

The building's environmental control systems are designed to maintain building temperatures between a minimum of 50°F and a maximum of 110°F, by use of forced ventilation, mechanical cooling, and heating systems.

### 9.4.4.2 System Description

The building can be considered to contain four large rooms: El 755.0 turbine room, El 729.0 spaces, El 708.0 spaces, and elevation 685.5 spaces. See Figure 9.4-18.

Because the El 755.0 floor is predominantly concrete and thus isolated from the floors below, the turbine building ventilation is provided by two separate systems. One system serves El 755.0 spaces, and the other system provides ventilation for the spaces on El 729.0 and El 708.0. Because the El 708.0 floor is predominantly grating, air supplied to El 708.0 spaces also provides ventilation for spaces on El 685.5.

Both ventilation systems operate on the basis of mechanically supplying the required flow of outside air to spaces being ventilated, and exhausting the building air to outdoors.

Each supply and exhaust fan is provided with a motor operated damper designed to automatically close when the fan is stopped, in order to prevent air back flow. Outside air is distributed to areas of heat concentration either by duct distribution systems or by induction using the negative pressure caused by operation of roof exhaust fans, through strategically located air intake openings.

#### 9.4.4.2.1 Elevation 755.0 Ventilation

The ventilation system for elevation 755.0 consists of two mechanical air supply systems, one on the north side and the other on the south, free-air-intake openings on the east and west walls, and exhaust fans on the elevation 820.0 roof. Total air exhausted is 570,000 cfm, whereas only 206,000 cfm is mechanically supplied through supply ducts. The remaining 364,000 cfm is drawn through the east and west free-air-intake openings by the negative pressure created by the operation of exhaust fans.

#### 9.4.4.2.2 Elevation 729.0 and Elevation 708.0 Ventilation

The elevation 729.0 and elevation 708.0 ventilation system consists of two mechanical air supply systems, one on the north side and the other on the south, and exhaust fans on the elevation 755.0 roof. A total of 412,000 cfm is exhausted, and a total of 412,000 cfm outside air is supplied.

#### 9.4.4.2.3 El. 685.5 Ventilation

There is no direct air supply to, or exhaust from, the El. 685.5 areas. However, the El. 708.0 floor above it is predominately grating; therefore, the air supplied to El. 708.0 spaces, and the circulation effected by the space and pump coolers located on El. 685.5, together, provide adequate ventilation for spaces on this floor.

#### 9.4.4.2.4 Cold Weather Building Pressurization

During cold weather, all supply and exhaust systems can be isolated by closing the motor operated dampers to conserve heat. However, the two supply fans serving north elevation 708.0 floor may be operated at half speed since two hot water heating coils located in the supply duct connected to each of these fans heat the incoming air. With no exhaust fan running, the operation of these two supply fans will pressurize the entire Turbine Building to prevent infiltration of cold outside air. However the very slight positive pressure within the Turbine Building at the Main Control Room Habitability Zone (MCRHZ) elevation does not challenge the MCRHZ required positive minimum

pressure of +1/8 inch water gauge with respect to the outdoors and adjacent areas during both normal or emergency modes of operation.

#### 9.4.4.2.5 Miscellaneous Ventilating Systems

The three toilet rooms and three janitor's closets are each ventilated by roof-mounted, roof-ventilator type exhaust fans. Plant air enters each room through a louvered door and is exhausted into the main room.

The lubricating oil purification room at elevation 708.0 is ventilated by a centrifugal fan mounted on the room wall, which discharges to the outdoors by means of a duct routed to a basement exhaust housing. A fire damper, mounted in the exhaust opening, and the room firedoor are designed to shut off all airflow in case of fire.

The elevator machinery room at elevation 708.0 is ventilated by a wall-exhauster type fan. The lubricating oil dispensing room at elevation 708.0 is ventilated by a wall-exhauster type fan. A fire damper mounted in the exhaust opening and the room's firedoor are designed to shut off all airflow in case of fire.

#### 9.4.4.2.6 Coolers

Fan-coil type raw water cooled cooling units have been installed throughout the Turbine Building to supplement the building ventilation system during peak cooling load conditions. Each cooling unit consists of a centrifugal fan and its motor, and a finned tube type water coil through which raw cooling water is circulated and over which air is passed and cooled.

Space coolers located on different elevations help prevent concentration of heat produced by various plant equipment by recirculating air in their immediate vicinities and so establishing the desired airflow patterns.

Pump coolers located in areas where miscellaneous turbine building pumps dissipate large amounts of heat, are each designed to remove heat produced by its pump to maintain maximum ambient temperature at 110°F.

##### 9.4.4.2.6.1 Space Coolers

Space coolers are located on elevation 729.0, elevation 708.0, and elevation 685.5 floors. A thermostat located near the return airflow to each cooler controls a solenoid valve on the raw cooling water supply line to each coil and the cooler fan. The solenoid valve and the fan on each cooler are interlocked to operate together.

##### 9.4.4.2.6.2 Pump Coolers

Pumps and the fans of the coolers assigned to them are interlocked to run simultaneously. However, raw cooling water to each cooling coil can be turned off and on manually to conserve water during off time. These coolers are not controlled thermostatically.

#### 9.4.4.2.7 Building Heating System

The building heating system serves the Turbine Building and the air preheating coils belonging to the auxiliary building general ventilation system, and the Reactor Building purge air preheating coils.

The heating system is a high-temperature hot water, closed, forced-circulation loop. The system consists of two 100% capacity water circulating pumps, two 70% capacity steam to water heat exchangers, tanks, heating coils, space and unit heaters, nitrogen pressurization, demineralized water makeup, chemical treatment, controls, and supply and return water distribution piping.

Steam is normally taken from the turbo-generator cold reheat cycle during operation of either unit, or is taken from the plant auxiliary boiler during plant shutdown or when both units are operating at less than 55% power. The heating system heat exchangers, pumps, and tanks are located at elevation 729.0 along the north end of Unit 2.

The heating system is designed to maintain the Turbine Building at a minimum temperature of 50°F with both units shutdown and a 13°F outdoor temperature. Heat is distributed by thermostatically controlled hot water unit and space heaters strategically located throughout the Turbine Building and by hot water heating coils mounted in the north elevation 708.0 air supply ducts. See Figures 9.4-19 and 9.4-20.

Fresh air may be supplied (136,000 cfm for plant) through the north elevation 708.0 air supply ducts. The hot water heating coils mounted in the ducts heat the incoming air.

The auxiliary building air preheating portion of the heating system consists of a secondary forced-circulation loop system for each plant unit containing two pumps and a 3-way temperature control valve. The valve is thermo-statically controlled to supply outdoor air heated to approximately 60°F.

### 9.4.4.3 Safety Evaluation

The turbine building ventilating and heating systems are designed to assure their reliable operation during normal plant operation and are not safety related. The free air intake dampers, located along the east and west walls of the elevation 755.0 turbine room are designed to close if a power failure occurs. There is no safety related equipment located in their immediate vicinity. Portions of the building heating system piping which supply hot water to the Auxiliary Building Unit 1 and 2 air intake air-preheating coils, are supported to seismic Category I (L) requirements to preclude any adverse effects on nearby safely related equipment.

### 9.4.4.4 Inspection and Testing Requirements

The Turbine Building environmental control systems are in continuous operation and are accessible for periodic inspection.

## 9.4.5 Engineered Safety Feature Ventilation Systems

The function of the engineered safety features ventilation systems is to provide a suitable and controlled environment for engineered safety feature components during

normal plant operation, during adverse environmental transients, and following design basis accidents.

### 9.4.5.1 ERCW Intake Pumping Station (IPS)

#### 9.4.5.1.1 Design Bases

The ERCW and the high pressure fire protection (HPFP) pump area at Elevation 741 and the raw cooling water and cooling tower makeup pump area at Elevation 728 are open to the outside environment and are therefore cooled by natural convection. The ERCW and HPFP pump area, the electrical equipment room, and the 100% redundant mechanical equipment rooms are the only areas containing safety-related equipment. The nature of the ventilation system in the ERCW and HPFP pump area provides assurance that a single active failure cannot result in loss of the ERCW and HPFP system functional performance capabilities.

The mechanical and electrical equipment rooms heating and ventilation systems are not safety-related. Their primary function is to maintain the room temperatures within the maximum and minimum design values during normal plant operation. Operator action is taken to periodically monitor the IPS mechanical and electrical equipment rooms space temperatures to ensure that the maximum and minimum design values are not exceeded.

The ERCW and HPFP pump areas may experience a maximum ambient air temperature of 120°F when the surrounding outside air is 95°F. Since they are exposed to the outside environment the pumps and their associated equipment are designed to withstand low ambient air temperatures, or else they are protected by periodic temperature monitoring and providing supplemental heating as necessary.

Electrical and mechanical equipment rooms are individually ventilated and heated during operation to maintain the room temperatures within the range of 40 to 115°F. Low temperature is limited by means of thermostatically controlled electric duct heaters and unit heaters, to above 32°F during extreme outside conditions by periodic temperature monitoring and providing supplemental heating, as necessary.

Because the IPS contains no sources of potential radioactivity, there are no safety-related airflow directions that must be maintained and no required radiation monitors.

The IPS is a Seismic Category I structure that is protected from the threats of tornado missiles and floods. A grid-type roof system is utilized to provide both missile protection and allow natural ventilation to the ERCW and HPFP pump area. The roof is composed of a series of horizontal 'I' beams rotated 45° about their longitudinal axes. The beams are supported by steel members which are in turn supported by concrete walls. The grillage is designed to meet Seismic Category I(L) requirements. The heating and ventilation equipment, ductwork, dampers, supply and exhaust fans, duct heater, and unit heater serving the electrical equipment and the mechanical equipment rooms meet Seismic Category I(L) requirements.

### 9.4.5.1.2 System Description

The IPS heating and ventilating systems for the electrical and mechanical equipment areas are shown in Figure 9.4-21. The pump areas are cooled by natural convection.

The electrical equipment room and mechanical equipment rooms are individually ventilated by separate ventilation systems. Each system is provided with 100% capacity supply and exhaust fans. The supply fan delivers air through a short vertical duct which encases the duct heater, a motor operated isolation damper, and a discharge grille. Two electric unit heaters are provided in each room. The duct heater and the unit heaters are thermostatically controlled.

Periodic temperature monitoring is necessary to ensure that the equipment room temperatures are maintained within design limits. Equipment room space temperatures are monitored during all plant conditions. Ventilation fans are shut down during subfreezing outdoor temperatures, and portable electric heaters and power generators are utilized as necessary during potential loss of heating to prevent freezing conditions in the equipment rooms. Non-essential cooling loads are manually shut down as necessary to maintain the space temperatures within design limits if ventilation is not available.

### 9.4.5.1.3 Safety Evaluation

The analysis of the ventilation system shows that:

*(1)* Adequate flow-through ventilation is provided for the ERCW and HPFP pump area by natural convection during all credible environmental conditions. Compensatory actions are taken during severe environmental conditions. A structural failure of the grillage roof will not prevent supply of adequate ventilation air to the pump deck

*(2)* Adequate heating and forced air ventilation are provided to each mechanical equipment room and electrical equipment room to maintain acceptable temperatures during normal operation. Compensatory actions are taken during abnormal or accident conditions, as needed. See Section 9.4.5.1.2 and Table 9.4-2.

A failure modes and effects analysis as shown in Table 9.4-2 indicates that the IPS ventilations sysems have the capabilities needed for normal operations, abnormal, and accident conditions. The IPS ventilations sysems are not classified as safety-related. However, operator actions are taken to peridocially monitor mechanical and electrical room temperatures, and provide supplementary heating, shutdown fans, or shed nonsafety-related heat loads, as necessary, to maintain room temperatures between the minimum and maximum design values. The systems are also desinged to maintain their structural integrity during a seismic event to not damage safety-related equipment in their vicinity.

#### 9.4.5.1.4 Inspection and Testing Requirements

The IPS ventilating and heating system is accessible for periodic inspection and testing.

### 9.4.5.2 Diesel Generator Buildings

#### 9.4.5.2.1 Diesel Generator Building

#### 9.4.5.2.1.1 Design Bases

The Diesel Generator Building (DGB) ventilating system is designed to provide adequate ventilation to the DGB spaces to maintain the required environmental conditions for safety-related equipment and prevent hydrogen buildup in the battery area during normal operation and design basis events (DBE) conditions.

The diesel units are redundant and are each served by a separate ventilation system consisting of two 50% capacity exhaust fans. Each ventilation system maintains a proper environment for the operation of safety-related components. Each diesel engine room ventilation subsystem consists of two room exhaust fans and one generator and electrical panel cooling fan. Each EBR is ventilated by a separate fan. Battery area is ventilated by its associated diesel generator room exhaust fans. These are safety-related fans which are designed to provide adequate ventilation to maintain the required ambient temperature limits.

A backdraft damper is installed in the duct between the air intake room 1A-A and the carbon dioxide storage room in order to prevent carbon dioxide backflow into the diesel generator air intake room in the event of a carbon dioxide system rupture.

Each diesel generator unit room and electrical board rooms are separately ventilated in order to limit average room temperatures to a design maximum of 120°F respectively when outdoor air entering the room is 95°F and the diesel generator is in operation. Remaining areas of the DGB are ventilated to maintain maximum air temperatures within design limits. Personnel comfort conditions are maintained as required during low outside temperatures by means of thermostatically controlled electric unit heaters. Battery areas are ventilated by the operation of the diesel generator room exhaust fans. There is not a separate battery area ventilation system. The diesels are started up and load-tested at least every 31 days. Although the DG room exhaust fans may not auto start and run during DG surveillance testing in the winter months, normal operation of the exhaust fans during surveillance testing of the DGs at the other times of the year in addition to the fans running during the summer months (without concurrent DG operation) will assure that the hydrogen concentration does not reach the Lower Explosion Limit (LEL) of 2% by volume. In addition, the exhaust fans operate whenever their room thermostats call for cooling, as described in Section 9.4.5.2.1.2

The generator for each engine room is supplied with outside air and the electrical control panels within the engine rooms are forced ventilated to assure adequate cooling.

Because the DGB contains no sources of potential radioactivity, there are no safety-related airflow directions that must be maintained and no required radiation monitors.

The DGB is a Seismic Category I structure that is designed to withstand the effects of tornado missiles and flood. The diesel generator room exhaust fans, the generator and electrical panel cooling fans, electrical board room exhaust fans, and all associated ductwork, fittings and dampers are located within the building and are designed to meet Safety Class 2b and Seismic Category I requirements. The portions of these systems, located on the roof of the building, are protected against missile damage by missile shields. These fans, their associated controls, and motor-operated dampers are connected to emergency power. The use of concrete air intake and exhaust hoods provides additional protection from the effects of missiles.

### 9.4.5.2.1.2 System Description

One diesel generator room exhaust fan automatically starts upon diesel startup. The second exhaust fan starts when the upper setpoint of a temperature switch mounted in the air exhaust-room is reached or on low flow of the first fan. The generator and electrical panel cooling fan can start along with either exhaust fan. The temperature switches mounted in the air exhaust room monitor the temperature of the air as it leaves the diesel generator room. Each switch may actuate its respective room exhaust fan upon detection of high diesel generator room temperature conditions or may deenergize its respective fan, as necessary, in order to maintain the diesel generator room exhaust temperature between 50°F and 120°F. All three fans automatically stop if the diesel generator room carbon dioxide fire suppression system is activated. Switches for manual operator action are provided to override the carbon dioxide system interlocks and start fans, open dampers to restore ventilation and fulfill the safety function if the carbon dioxide is activated by a failure in the carbon dioxide or fire detection systems.

The toilet room is ventilated by a manually controlled fan. The electrical board rooms, lube oil storage room, and fuel oil transfer room are ventilated by manually controlled fans at all times except when their respective carbon dioxide fire suppression systems are activated. The muffler rooms are ventilated as required to remove heat during warm weather. Muffler room exhaust fans are manually operated from hand switches located on the electrical board that serves the particular fan, or start along with the diesel when in the auto mode.

Fire dampers are provided in each air supply and exhaust opening to the diesel generator room, electrical board room, lube oil storage room, and oil-transfer room. Motor-operated dampers located at the air intake to each diesel generator room are automatically opened whenever either of the exhaust fans starts. All fans except for the generator and electrical panel cooling fans are equipped with motor operated shutoff dampers which close when their associated fan is not operating. Similarly, all relief

vents are provided with motor operated shutoff dampers except the electrical board room intake vents which are provided with fire dampers instead.

The DGB heating and ventilating system is shown on Figures 9.4-22,-23,-24,-24A and 9.4-25. Two diesel generator room exhaust fans, and one electrical board room exhaust fan are located in the air exhaust room at Elevation 760.5 for each of the four diesel generator units. These fans discharge to the outdoors. One generator and electrical panel cooling fan is located within each diesel generator room.

During tornadoes, the essential components of the system remain functinal because the components are located in a Seismic Category I structure that is designed to resist damage by tornado missiles. For tornado depressurization mitigation, intake, and exhaust dampers are opened to assist in pressure equalization.

Fresh air is introduced through each air intake room and drawn to the corresponding diesel generator room. The generator and electrical panel cooling fan draws air from the room intake vicinity for distribution to the generator air intake and to the electrical panel. Following absorption of the heat load in the room the air is drawn into the air exhaust room by the room exhaust fan(s) and is discharged through the air exhaust hood.

Each battery area is ventilated by the operation of its respective diesel generator room exhaust fan during the periodic diesel generator testing as required by the Technical Specifications.

Each of the electrical board rooms is ventilated by a centrifugal exhaust fan . The fan draws outside air into the board room through its associated electrical board room intake vent.

Other building exhaust fans provide individual ventilation for the lubricating oil storage room, fuel oil transfer room, carbon dioxide storage room, toilet room, and muffler rooms.

The thermostatically controlled electric unit heaters located within the diesel generator rooms are designed to maintain the 50°F minimum temperature. Electric unit heaters in the equipment access corridor, storage rooms, radiation shelter rooms, and toilet room are designed to maintain normal temperature within these areas at not less than 40°F.

Thermostats in the diesel generator air exhaust rooms are designed to automatically stop all operating diesel generator room exhaust fans upon a drop in room exhaust air temperature to a low setpoint and to automatically start the exhaust fans upon a room temperature rise to a high setpoint. The thermostats will also start the standby exhaust fan during diesel generator operation, when the room exhaust air temperature exceeds the high setpoint.

### 9.4.5.2.1.3 Safety Evaluation

A functional analysis and a failure modes and effects analysis have shown that the Diesel Generator Building ventilation system has the capabilities needed for normal operations and for accident mitigation. The functional analysis shows that:

*(1)* Adequate ventilation is provided to maintain the required environmental conditions for optimum equipment operation during all operational modes. See Section 9.4.5.2.1.1.

*(2)* The battery area is adequately ventilated (except for system shutdown after a $CO_2$ system actuation signal) to prevent hydrogen buildup in the diesel generator room.

*(3)* The lack of a dedicated battery hood exhaust fan will not prevent forced air circulation past the batteries. During testing of the diesel generators, the diesel room exhaust fans start automatically in response to diesel start if the temperature at the local temperature switches located in the exhaust fan rooms is greater than the required set point. Concurrent with fan operation, dampers in the diesel room exhaust structure and at the air intake to each diesel generator room also open to facilitate adequate air flow to pass through the diesel generator room. Although the DG room exhaust fans may not auto start and run during monthly testing in the winter months, normal operation of the exhaust fans during testing of the diesel generators at other times of the year in addition to the fans running during the summer months (without concurrent DG operation) prevents a buildup of hydrogen gas above the Lower Explosion Limit (LEL) of 2% by volume.

*(4)* Essential portions of this system remain functional during and after a seismic event because of their design to Seismic Category I requiements. Nonessential portions of this system and other system located close to essential components are designed to Seismic Category I(L) requirements to prevent their failure from precluding operation of essential system components.

The failure modes and effects analysis, as shown in Table 9.4-4, confirms that:

*(1)* During diesel generator operation, low air flows through the fans serving the diesel generator room and generator and electrical panels is detected by flow sensors. The failure will annunciate in the MCR.

*(2)* A failure of an electrical board room exhaust fan, and the resulting heat buildup in the room to above 110°F, may cause loss of the associated diesel generator. However, the redundant train diesel generator provides power to safely shut down the unit.

*(3)* During flooding conditions, all essential components of this system will remain functional because they are located above the maximum possible flood level.

*(4)* During tornadoes, the essential components of the system remain functional because they are located in a Seismic Category I structure that is designed to resist damage by tornado missiles. For tornado depressurization mitigation, intake, and exhaust dampers are opened to assist in pressure equalization.

*(5)* Upon loss of offsite power, each diesel generator provides emergency electrical power to its associated ventilation components. All are connected to their respective diesel generator engineered safety power supply, so operation of a diesel generator assures power to the corresponding fans.

#### 9.4.5.2.1.4 Tests and Inspections

*Historical Information:* This system is tested initially as part of the preoperational test program. See section 14.2 for testing acceptance criteria.

The Diesel Generator Building ventilating and heating systems are accessible for periodic inspection. After maintenance or modification activities that affect a system function, testing is performed as necessary to reverify the system or component operation.

### 9.4.5.3 Auxiliary Building Engineered Safety Features (ESF) Equipment Coolers

#### 9.4.5.3.1 Design Bases

The Auxiliary Building ESF equipment coolers are designed to maintain acceptable environmental conditions for (1) personnel access, operation, inspection, maintenance and testing and (2) the protection of safety-related mechanical and electrical equipment and controls. The system utilizes fan/coil type safety-related air cooling units. Air cooling units are provided for the following rooms and areas:

*(1)* Residual heat removal pump room

*(2)* Safety injection pump room

*(3)* Containment spray pump room

*(4)* Centrifugal charging pump room

*(5)* Reciprocating charging pump room*

*(6)* Unit 1 auxiliary feedwater and component cooling water pumps area

*(7)* Unit 2 auxiliary feedwater and boric acid transfer pumps area

*(8)* Component cooling water booster and spent fuel pool pumps area

*(9)* Emergency gas treatment system filter room

*(10)* Elevation 692.0 penetration rooms

*(11)* Elevation 713.0 penetration rooms

*(12)* Elevation 737.0 penetration rooms

*(13)* Pipe chases

*Not safety-related

All air coolers listed above, except the reciprocating charging pump coolers (indicated with an asterisk), are ESF equipment and are provided with coordinated emergency power and ERCW water sources (see Sections 8.3 and 9.2). Pumps 1 through 5 in the above list are each located in a separate room with their corresponding cooler. Safety-related pump rooms are paired with a 100% redundant room containing another pump/cooler set. Pumps and equipment listed in Items 6 through 13 are each provided with two 100% coolers in the room/area. In addition to the above coolers, this system includes two 100% emergency exhaust fans, one safety-related and the other nonsafety-related, in each turbine-driven auxiliary feedwater pump room. Each of these fans is capable of providing the required air flow in the room for the volume changes method of cooling.

Rooms and areas containing ESF equipment are ventilated by airflows induced by the building ventilation exhaust subsystem during normal plant operation and when equipment is not required to operate. All air cooling units are thermostatically controlled to automatically operate upon room temperature rise above the setpoint. Air cooling units for pumps 1 through 4 will automatically start to provide the necessary additional cooling in the space whenever their associated pumps are operated. All other coolers for ESF equipment will automatically start on an Auxiliary Building isolation signal. If cooler starts due to ABI signal, it remains on until ABI is reset or hand switch position is changed. If cooler starts due to high temperature, a thermostat, located near the return airflow to each cooler, allows the cooler to remain in operation until the low limit temperature setpoint is reached. The cooling water valve and fan are interlocked to operate together for all coolers, except for the residual heat removal and centrifugal charging pump rooms, whose cooling water valves are electrically disconnected in the open position due to 100 CFR 50 Appendix R considerations.

The ESF equipment ventilation system is designed to maintain temperatures within the range for which the equipment is environmentally qualified, to ensure that equipment and components are not exposed to environmental conditions that could degrade the operability of safety-related equipment.

All components of this system, including air cooling units, fans, ductwork, dampers, valves, and grilles, are designed to meet Seismic Category I and Safety Class 2b requirements. The system is completely enclosed in a Seismic Category I structure that is designed against flood and tornado missile threats.

### 9.4.5.3.2 System Description

The Auxiliary Building ESF coolers are shown on Figures 9.4-10, 9.4-13, 9.4-14, 9.4-16, 9.4-26, and 9.4-27. The individual coolers are listed below:

| | Number |
|---|---|
| RHR Pump Room | 4 |
| Safety Injection Pump Room | 4 |
| Containment Spray Pump Room | 4 |
| Centrifugal Charging Pump Room | 4 |
| Reciprocating Charging Pump Room | 2 |
| Unit 1 Auxiliary Feedwater and Component Cooling Water Pumps | 2 |
| Unit 2 Auxiliary Feedwater and Boric Acid Treatment Pumps | 2 |
| Emergency Gas Treatment Room | 2 |
| Component Cooling Water Booster and Spent Fuel Pool Pumps | 2 |
| Pipe Chases | 4 |
| Elevation 692.0 Penetration Room | 4 |
| Elevation 713.0 Penetration Room | 4 |
| Elevation 737.0 Penetration Rooms | 4 |

The turbine-driven auxiliary feedwater pump (TDAFWP) rooms are normally cooled by the Auxiliary Building general ventilation system. For emergency ventilation, two roof ventilator type exhaust fans are located on the roof of each room (See Figure 9.4-13), venting into the general spaces of the Auxiliary Building. One of the two fans per room operates on 115v, 60 Hz ac emergency power while the other operates on 115V dc station vital battery power. The ac-powered fan is nonsafety-related and the dc-powered fan is safety-related. Both fans in each room are thermostatically controlled to automatically operate upon room temperature rise above setpoint . The dc powered fan also automatically runs upon pump start. Each fan is rated at 1200 cfm and designed to circulate a sufficient quantity of building air through their rooms to limit the maximum temperature rise to approximately 20°F above ambient.

In the event of a steam line break within the room, two isolation valves are provided in the common portion of the steam supply piping to the TDAFWP, to close on high room temperature.

#### 9.4.5.3.3 Safety Evaluation

A functional analysis and failure modes and effects analysis have shown that the Auxiliary Building ESF coolers have the capabilities needed for normal operations and for accident mitigation. These are described in the paragraphs that follow.

A functional analysis of the system shows that:

*(1)* Adequate ventilation is provided during normal operations by the Auxiliary Building general ventilation system. When the applicable equipment is operating, the ESF equipment area and TDAFWP room fans provide adequate temperature control to assure reliable equipment operation.

*(2)* The containment isolation Phase A signal, high radiation in the spent fuel pool area, a CVI signal when containment and/or the annulus is open to the Auxiliary Building ABSCE spaces, and high air temperature in the Auxiliary Building air intakes provide for a two-train isolation signal for the Auxiliary Building. Isolation of the general ventilation system, described in Section 9.4.3, results in the disruption of normal airflow patterns; and thus, provide for an effectively sealed ABSCE boundary.

*(3)* After the building is isolated from the environment, airflow patterns and air cleanup operations appropriate for accident mitigation during the accident mode of operation are established and maintained by the ABGTS, as described in Section 6.2.3.

The failure modes and effects analysis, as shown in Table 9.4-3, indicates that:

*(1)* The safety-related radiation monitors in the Auxiliary Building refueling area provide redundant signals, for isolation of the Auxiliary Building.

*(2)* During normal operation, each ESF space is cooled by the general ventilation system and an ESF cooler. During accident conditions, cooling of the ESF equipment is provided by the ESF coolers. In the event of failure of one ESF area cooler, the redundant cooler is available. In the event of failure of one pump room cooler, the redundant pump and its associated room cooler are also available.

*(3)* During its emergency mode of operation, the TDAFWP receives cooling from the dc-driven TDAFW pump room fan, the failure of which is not postulated since a single failure in the two 50% capacity motor-driven AFW pumps would have already been postulated.

*(4)* Failure of any portion of this system as the result of a seismic event is prevented by use of only Seismic Category I components in this system.

(5) During the accident mode of operations, emergency electrical power is provided to the ESF pumps and their corresponding coolers or fans. In the event one emergency power train fails, the essential safety-related functions of the system are accomplished by the redundant parts of the system powered by the remaining power train.

(6) Water is supplied to each cooler from the ERCW system described in Section 9.2.1. Failure of one ERCW supply train, and the resulting failure of the area coolers supplied by that train, will not prevent the redundant coolers, supplied by a different ERCW train from supporting shutdown of the reactor unit. In the case of the loss of ERCW supply to a pump room cooler, the redundant pump is available.

#### 9.4.5.3.4 Inspection and Testing Requirements

*Historical Information*: The system is tested initially as part of the preoperational test program. See Section 14.2 for testing acceptance criteria.

The Auxiliary Building ESFcoolers are designed to be available for continuous operation and are accessible for periodic maintenance. After maintenance or modification activities that affect a system function, testing is done to reverify the system or component operation.

### 9.4.6 Reactor Building Purge Ventilating System (RBPVS)

#### 9.4.6.1 Design Bases

The RBPVS is designed to maintain the environment in the primary containment and Shield Building annulus within acceptable limits for equipment operation and for personnel access during inspection, testing, maintenance, and refueling operations, and to provide a filtration path for any through-duct outleakage from the primary containment to limit the release of radioactivity to the environment.

The RBPVS performs three distinct functions, the forced air purge function, the continuous pressure relief function, and the alternate containment pressure relief function.

The forced air purge function is performed by a purge supply and purge exhaust system consisting of two trains, each of which is desgined to provide 50% of the capacity needed for normal purging. Each train consists of a supply fan, an exhaust fan, a HEPA filter-charcoal adsorber assembly, containment isolation valves and associated dampers and ductwork. This function provides a means by which containment air may be forcibly exchanged and filtered. The purge function provides a means by which containment air may be forcibly exchanged and filtered. The purge function of the RBPVS is not a safety-related function. However, the filtration units are required to provide a safety-related filtration path following a fuel handling accident until all containment isolation valves are closed. The safety functions are to assure

isolation of primary containment during an accident and to isolate the purge air supply intake upon receipt of an Auxiliary Building Isolation (ABI) signal.

During Operating Modes 1 thru 5, continuous pressure relief is provided by a passive ducting system which passes through containment penetration X-80, through two 100% redundant containment vent air cleanup units (CVACU) containing HEPA filters and charcoal adsorbers. Containment air is moved into the annulus by the motive force created by differential pressure between the two spaces. Filtration redudancy allows maintenance on one unit at a time while maintaining an open pathway through the other. This ventilation pathway is isolable using containment isolation valves FCV-30-40 and FCV-30-37 which are closed during Mode 6 or when containment isolation is required. This system is not required for fuel handling accident mitigation and is not available for that purpose since it is essentially isolated by containment isolation valves during fuel loading or handling activities (Mode 6).

The alternate pressure relief function is provided by way of a configuration alignment in the forced air purge system. This function is accomplished by opening lower compartment purge lines (one supply and one exhaust) or one of the two pairs of lines (one supply and one exhaust) in the upper compartment. During purging mode, the purge air fans may or may not be used. To prevent inadvertent pressurization of containment due to supply and exhaust side ductwork flow imbalances, the supply ductwork airflow may be temporarily throttled as needed.

The purge function of the RBPVS is not a safety-related function. However, the filtration units are required to provide a safety-related filtration path following a fuel-handling accident.

The design bases include provisions to:

*(1)* Supply fresh air for breathing and contamination control when the primary containment or annulus is occupied.

*(2)* Exhaust primary containment and annulus air to the outdoors whenever the purge air supply system is operated.

*(3)* Clean up containment exhaust during normal operation by routing the air through HEPA-carbon filter trains before release to the atmosphere to limit potential release of radioactivity to the environment.

*(4)* Provide a reduced quantity of ventilating air to permit occupancy of the instrument room during reactor operation. The provisions for 1, 2, and 3 above will apply.

*(5)* Assure closure of primary and secondary containment isolation valves following accidents which result in the initiation of a containment ventilation isolation signal.

*(6)* Assure closure of the system air intake dampers, which form part of the ABSCE (see Section 6.2.3.2.1), upon receipt of a signal for Auxiliary Building isolation.

*(7)* Provide continuous containment pressure relief path through HEPA-carbon filter trains before release to the atmosphere during normal operations.

Items 5 and 6 above are safety-related functions.

The primary containment penetrations for the ventilation supply and exhaust subsystems are designed to primary containment structural standards. These are discussed in detail in Section 6.2.4.

The RBPVS is sized to maintain an acceptable working environment within the containment during all normal operations. The system has the capabilities to provide a filtration path for outleakage from the primary containment, and clean up containment atmosphere following a design basis accident. It also has provisions to filter air flow exhausted from containment for pressure control, during normal operation.

The controls are designed to have simultaneous starting and stopping of the matching supply and exhaust equipment and to initiate an automatic shutdown and isolation upon receipt of the containment ventilation isolation signal.

In addition, RBPVS supply fans will shut down and the ABSCE isolation dampers in purge air supply ducts will close on an ABI signal.

The RBPVS air cleanup equipment assures that activity released inside containment from a refueling accident and prior to containment isolation, is processed through both HEPA filters and carbon adsorbers before release to the atmosphere. Fuel handling operations inside the primary containment are constrained by the operability requirement for the RBPVS air cleanup units contained in the plant technical specifications.

The RBPVS components are designed or qualified to meet Seismic Category I requirements, except all purge ductwork within the containment, up to the inboard isolation valves, and the supply air ductwork from the downstream flange of the ABSCE isolation dampers to the upstream flange of the Shield Building isolation valves, which are designed to meet Seismic Category I(L) requirements.

The primary containment exhaust is monitored by redundant radiation detectors which provide automatic RBPVS isolation upon detecting the setpoint radioactivity in the exhaust air stream. The RBPVS isolation valves automatically close upon the actuation of a containment ventilation isolation signal or upon manual actuation from the MCR. In addition, during fuel handling operations in the Auxiliary Building with containment and/or the annulus open to the Auxiliary Building ABSCE spaces, the RBPVS isolation valves will close upon a high radiation signal from the spent fuel pool radiation monitors via a CVI signal.

The system air supply and exhaust ducts are routed through the Shield Building annulus to several primary containment penetrations. Two air supply locations are provided for each of the upper and lower compartments and one for the instrument room. Air is supplied to areas of low potential radioactivity and is allowed to flow to the air pickup exhaust points in areas of higher potential radioactivity. The air pickup points, located to exhaust air from the lower compartment and instrument room, also provide an air sweep across the surface of the refueling canal.

During cold shutdown and refueling operations, the entire containment may be purged using any number and size of purge supply and exhaust lines.

During reactor operation, the number and size of lines used for containment purging, are restricted to two 24-inch diameter lines (i.e., one supply line with 50°-open valves, and one exhaust line with 50°-open valves), or two 24-inch diameter lines with wide-open valves (i.e., one supply line and one exhaust line).

### 9.4.6.2 System Description

The RBPVS is shown schematically in Figures 9.4-28 to 9.4-30. One complete and independent RBPVS is provided for each unit.

The containment upper and/or lower compartments are purged with fresh air by the RBPVS before occupancy. The annulus can be purged with fresh air during reactor shutdown or at times when the annulus vacuum control system of the EGTS is shut down. The instrument room is purged with fresh air during operation of the RBPVS or is separately purged by the instrument room purge subsystem.

The containment is vented into the annulus, during normal operation, continuously, through the containment vent air cleanup units (CVACUs), which contain HEPA and charcoal filters, to maintain the containment pressure within the Technical Specification limits. Exhaust air mixes with the annulus atmosphere before it is discharged into the Auxiliary Building exhaust stack by the annulus vacuum control fan(s) (See Section 6.3.2.2).

RBPVS for each unit consists of two trains, each designed to provide 50% of the capacity required for normal operation. Each train contains an air supply fan, an air exhaust fan, a cleanup filter unit, containment isolation valves, system air flow control valves, and all necessary ductwork. The system also includes single air supply distribution and air exhaust collection subsystems as well as an instrument room supply fan and an instrument room exhaust fan.

The RBPVS supply fans are located in the penetration rooms at elevation 737.0 in the Auxiliary Building. Filtered fresh air, heated when required, is taken from the Auxiliary Building air supply systems located in the mechanical equipment rooms at elevation 737.0. These fans are of centrifugal type and belt-driven, with adequate system air flow rate (See Figure 9.4-28).

The filtered air is discharged to the outdoors by means of the Shield Building exhaust vent located in the annular space of the Reactor Building and extending through the roof of the Reactor Building. The purge air exhaust fans are centrifugal type and belt-driven, with a combined flow of 22,949 $ft^3$/min. The air cleanup units are described in Section 6.5.1.

Annulus purging air is taken from system ducts and routed through the annulus. The air supply and exhaust duct openings are located approximately 180° apart for maximum ventilation.

To permit personnel access to the instrument room during reactor operation or during RBPVS shutdown, the room can be purged by the instrument room purge subsystem fans. These supply and exhaust fans are located alongside the main system supply and exhaust fans and use the main system ducts and one of the filter trains. Butterfly valves are positioned to allow only the instrument room to be served.

Each RBPVS containment penetration is provided with both inboard and outboard air-operated isolation butterfly valves designed for minimum leakage in their closed position. A similar type of valve is mounted in each purge supply and exhaust air opening for the annulus, and in each of the main supply and exhaust ducts located exterior to the Shield Building. The purge air supply line is provided with two air-operated isolation dampers in series for ABSCE isolation. Each of the above butterfly valves and the intake dampers are designed to fail closed and are normally closed during purge system shutdown. See Section 6.2.4 for more on the containment isolation system.

The single air supply duct serving the two purge air supply fans and the instrument room supply fan is provided with two isolation dampers. These dampers are air operated, normally closed, failed closed dampers which close automatically on receipt of Auxiliary Building isolation or high radiation in refueling area signals. These dampers establish the boundary for the ABSCE. See Section 6.2.3.

Since the annulus is maintained at a 5-inch water gauge negative pressure by the annulus vacuum control system, the annulus portion of the purge system ducts is maintained at the negative pressure by four 1/2-inch leakoffs. This arrangement is designed to prevent containment contamination leakage from escaping through the purge system ducts into the Auxiliary Building.

The purge function of the RBPVS is not a safety-related function. However, the filtration units are required to provide a safety-related filtration path following a fuel-handling accident. The primary containment isolation valves and intermediate piping of the RBPVS are designed in accordance with ANS safety class 2A; other portions are designated ANS safety class 2B except the purge fans, all purge ductwork within the containment, purge supply air ductwork from the ABSCE boundary, fire protection, and drain piping. The instrument room purge subsystem is not an engineered safety feature, and credit for its operability for a LOCA or a fuel-handling accident is not claimed.

A containment ventilation isolation signal automatically shuts down the fans and isolates the RBPVS by closing its respective dampers and butterfly valves. Each RBPVS primary containment isolation valve is designed for fail safe closing within 4 seconds of receipt of a closure signal for containment penetrations (See Tables 6.2.4-1 through 6.2.4-4 and Figure 6.2.4-21). The RBPVS primary containment isolation valve locations and descriptions are given in Table 6.2.4-1. Each valve is provided with an air cylinder valve operator, control air solenoid valve, and valve position indicating limit switches.

Smoke detectors, located in the Auxiliary Building air intake and the general ventilation supply ducts, shut down the purge air supply and the incore instrument room purge supply fans and their isolation dampers.

### 9.4.6.3 Safety Evaluation

Functional analyses and failure modes and effects analysis have shown that the RBPVS meets the containment isolation requirements. The purge air filtration units and associated exhaust ductwork provide a safety-related filtration path following a fuel-handling accident. The CVACUs, performing a continuously filtered containment vent function during normal operation, are isolated by the closure of their containment isolation valves; therefore are not operable after accidents. In addition, the containment ventilation system is not allowed to be used during Mode 6.

A functional analysis of the system shows that:

*(1)* During normal operation, adequate fresh air is provided for breathing and for contamination control when the primary or secondary containment (annulus) is occupied.

*(2)* Primary and secondary containment exhaust air is cleaned up during normal operations and following a fuel handling accident.

*(3)* Purge supply and exhaust fan operations cease and isolation dampers in the intake and exhaust ducting close when the system is in the accident mode of operation.

*(4)* Three signals cause the system to change from the normal purge mode to the accident isolation mode. These signals, which include manual, SIS auto-initiate, and high purge exhaust radiation (automatic), initiate a containment ventilation isolation signal. Additionally, during refueling operations whenever containment and/or the annulus is open to the Auxiliary Building ABSCE spaces, a high radiation signal from the spent fuel pool accident radiation monitors automatically cause the system to change from the purge mode to the accident isolation mode.

*(5)* Discharges from the annulus, during normal operation, which are exhausted through the Auxiliary Building exhaust stack, are monitored at the stack. Although these radiation monitors do not initiate an automatic containment isolation signal, radioactive release limits have been established as a basis

for controlling plant discharge during operation. Radioactive releases from the plant resulting from equipment faults of moderate frequency are within 10 CFR 50 Appendix I and 40 CFR 190 limits as specified in the ODCM (See Section 11.3 for further details). In addition, analyses have shown that any accident with the potential consequence to exceed the 10 CFR 100 limits, would be detected by other indicators (see item 4 above) and cause an automatic primary and/or secondary containment isolation.

Containment vent system is not allowed to be used during Mode 6.

The failure modes and effects analyses show that:

*(1)* Two filtration exhaust paths are provided to assure that particulate releases are within 10 CFR 100 guidelines following a fuel-handling accident and prior to closure of the associated isolation valves.

*(2)* Each purge supply and exhaust line is equipped with two primary containment isolation valves, each connected to different control and power trains. Failure of one train does not prevent the remaining isolation valve from providing the required isolation capability.

*(3)* Essential portions of the system remain functional after a seismic event because of their design to Seismic Category I requirements. Nonessential portions of the system and other systems located close to essential components and not designed to Seismic Category I standards are designed to meet Seismic Category I(L) requirements to prevent their failure from precluding operation of essential safety-related equipment.

*(4)* All essential equipment is located above the maximum possible flood level in a Seismic Category I building that is designed to resist tornado missiles.

*(5)* A loss of offsite power causes closure of the isolation valves.

*(6)* ABGTS safety-related functions are not impeded by the worst-case failure in the RBPVS; i.e., one train of ABI signal failing, thus resulting in only one ABGTS train starting, one RBPVS supply fan and the Incore Instrument Room supply fan continuing to run, all the ABSCE isolation dampers of the same train remaining open, and all RBPVS exhaust fans shutting down.

### 9.4.6.4 Inspection and Testing Requirements

Before power operation, tests are conducted to assure that the RBPVS performs as designed. The system is tested initially as part of the preoperational test program. After maintenance or modification activities that affect a system function, testing is done to reverify the system or component operation. Purge system containment penetration isolation valves are tested for inplace closing speed and leak tested in the closed position to comply with the requirements of 10 CFR 50, Appendix J. The inspection and testing of these valves is discussed in Section 6.2.4.

Details of the testing program for the air-cleanup units are included in Section 6.5.

## 9.4.7 Containment Air Cooling System

### 9.4.7.1 Design Bases

The containment air cooling systems are designed to maintain acceptable temperatures within the reactor building upper and lower compartments, reactor well, control rod drive mechanism (CRDM) shroud, and instrument room for the protection of equipment and controls during normal reactor operation and normal shutdown. The instrument room is mechanically cooled to permit personnel access during normal reactor operation.

The lower compartment cooling (LLC) air system, together with operation of the CRDM air cooling system, is designed to maintain a maximum weighted average air temperature of 120°F in most lower compartment spaces during normal reactor operation. These spaces include the steam generator and pressurizer compartments, the space below the reactor vessel, the space around the reactor vessel, the spaces around the reactor vessel nozzles and supports and the upper reactor cavity well space around the CRDM shroud. For Unit 2, four 33-1/3% capacity and for Unit 1, three 33-1/3% and one 29.2% LCC fan coil assemblies are provided to allow three or less to operate during reactor normal operation with one or more on standby.

The LCC air system manual dampers are adjusted to provide sufficient air flow through the reactor well to maintain an approximate air temperature of 120°F. The system is designed for two of four units to recirculate air through the lower containment and equipment compartments, although all four may be operated, anytime there is a loss of normal containment cooling following any non-LOCA design basis event, which results in a hot standby condition. The LCC system is not required to operate after a LOCA. See Section 6.2.2.1 for detailed information and operation after a MSLB.

The CRDM air cooling system is designed to operate during normal reactor operation in conjunction with the LCC air system to maintain a maximum air temperature within the upper reactor cavity of 120°F and to route all of the reactor well air through the CRDM shroud to maintain a maximum air temperature of 185°F. Air drawn through the CRDM shroud is cooled by the active fan-coil assemblies to approximately 120°F and discharged into the lower compartment of the Reactor Building.

When additional cooling in the lower compartment is required, an arrangement of dampers allows either or both standby CRDM fan-coil assemblies to be operated to recirculate and supplement the LCC system capacity.

The upper compartment cooling (UCC) air system is designed to maintain the upper compartment weighted average temperature at a maximum of 110°F during normal reactor operation.

The Reactor Building instrument room air cooling system is designed to automatically maintain the room air temperature between 50°F and 120°F during normal reactor operation.

The heat sink for each LCC, UCC, and CRDM air cooling fan-coil assembly, and for each instrument room air cooling system condensing unit, is the ERCW.

The LCC units and CRDM air fan-coil assemblies are manually energized from the emergency power system upon loss of offsite power; however, these components are not required to operate during LOCA conditions. The LCC units may be operated continuously throughout all accidents, except a MSLB, which does not initiate a Phase B containment isolation signal. Following a MSLB, two of the four LCC unit fans are required, but all four are started manually, within 1.5 to 4 hours after the detection of the MSLB accident to recirculate air in the lower compartment dead-ended spaces. This is a safety function of the LCC units' fans.

### 9.4.7.2 System Description

The containment air cooling system flow scheme is shown in Figure 9.4-28. The system's control scheme is shown in Figures 9.4-30 and 9.4-31 and the logic scheme in Figures 9.4-29 and 9.4-32 through 9.4-34. The containment air cooling system is composed of four subsystems as follows:

*(1)* Lower Compartment Air Cooling

*(2)* CRDM Air Cooling

*(3)* Upper Compartment Air Cooling

*(4)* Reactor Building Instrument Room Air Cooling

#### 9.4.7.2.1 Lower Compartment Air Cooling System

There are four LCC air fan-coil assemblies which are located in two annular concrete chambers around the periphery of the lower compartment at floor Elevation 716. Each fan-coil assembly consists of a plenum, eight air cooling coils, vaneaxial fan, backdraft damper, instruments, and controls. For Unit 1 only, LCC 1D-B has a reduced cooling capacity of approximately 12.5% due to isolation of ERCW to one of its eight cooling coils.

These fan-coil assemblies are supplied water from the plant ERCW system. A cooling water throttling valve for each assembly is automatically controlled by a temperature indicating controller which utilizes an input from a thermocouple mounted in the assembly's return air supply and set to control the cooler outlet temperature as required to maintain the required weighted average temperature. The ERCW system is described in Section 9.2.1.

Lower compartment air passes directly to each active fan-coil assembly where it is cooled and supplied through a common duct distribution system to the lower compartment spaces. The system is designed for three of the four fan-coil assemblies to operate together, with one on standby. The cooled air is supplied directly to each steam-generator compartment, pressurizer compartment, letdown heat exchanger room, main lower compartment space, and to the space below the reactor vessel.

Connections are available in the A-Train ERCW supply and return headers for the lower compartment coolers that will allow chilled water from a non-safety related chiller to be used to provide additional cooling of the Unit 1 Reactor Building during outages.

#### 9.4.7.2.2 Control Rod Drive Mechanisms Air Cooling System

The four CRDM air cooling fan-coil assemblies are located in the main lower compartment space at floor elevation 702.78. Each assembly consists of a plenum, three air cooling coils, two vaneaxial fans, in series, assembly isolating motor-operated damper, instruments, and controls. Each fan-coil assembly is designed to cool the CRDM shroud to 185°F with water from the plant ERCW system. A cooling water throttling valve for each assembly is automatically controlled by a temperature indicating controller which utilizes an input from a thermocouple mounted on the intake side of the CRDM cooling unit .

The four CRDM air cooling fan-coil assemblies are divided into two pairs. One fan-coil assembly in each pair is normally operated to provide adequate cooling to the CRDM shroud during normal reactor operation. Reactor well air exiting the shroud is cooled by the fan-coil assemblies and discharged into the lower compartment spaces.

#### 9.4.7.2.3 Upper Compartment Air Cooling System

The four UCC air fan-coil assemblies are located within the upper compartment at Elevation 801.69. Fan-coil assemblies consist of plenums, air cooling coils, vaneaxial fans, instruments, and controls. They are designed to maintain the upper compartment weighted average temperature at a maximum of 110°F with water from the plant ERCW system. A cooling water throttling valve for each assembly is automatically controlled by a temperature indicating controller which utilizes an input from a thermocouple mounted in the return air supply.

A portion of the upper containment air is continuously recirculated and cooled by the UCC fan-coil assemblies. The system is designed for three of the four assemblies to operate together with one on standby.

#### 9.4.7.2.4 Reactor Building Instrument Room Air Cooling System

The instrument room air cooling system consists of two 100% capacity air conditioning systems. Each system consists of a serviceable, packaged water chilling unit and chilled water pump located in the Auxiliary Building penetration room at Elevation 692, a fan-coil unit with air supply duct located in the Reactor Building instrument room, connecting chilled water piping with double containment penetration isolation valves, and all necessary and customary control and indicating devices. Chiller condensers are cooled by ERCW.

The chilled water piping penetrations through the primary containment vessel (See Tables 6.2.4-1, 6.2.4-2 and Figure 6.2.4-17D) are each provided with two isolation valves, one located inside and one located outside containment for each penetration. These 2-inch valves are pneumatic-motor operated and are designed to fail closed.

#### 9.4.7.2.5 Controls and Instrumentation

Operation of each fan-coil unit (LCC, UCC, CRDM, and instrument room) is indicated in the MCR. The UCC system standby unit automatically starts when pressure differential to two of the four coolers is below the setpoint, or upon compartment high temperature signal. The LCC system standby unit automatically starts when airflow is below the setpoint in two of the four fans. A CRDM cooling system standby unit automatically starts on low air flow in an operating unit. The instrument room standby cooler automatically starts when airflow is below the setpoint in the operating cooler. The LCC, UCC, and CRDM coolers are administratively controlled to prevent automatic starting of the standby unit during normal operation, Air temperature is continuously monitored to evaluate system performance for each of the four cooling systems. Class 1E temperature elements are mounted near the intake side air stream of each LCC with direct read-out in the MCR. Containment pressure is used by the operators as input for manual initiation of the air return fans and the containment spray system to maintain lower compartment temperature within limits during events in which the ERCW supplied coils are inoperable.

### 9.4.7.3 Safety Evaluation

The LCC fans are started (only two are required) to recirculate air through the lower containment and equipment compartments anytime there is a loss of LCC following any non-LOCA design basis event resulting in the reactor in a hot standby condition. After a MSLB, all four LCCs are started (only two are required) within 1.5 to 4 hours after the MSLB, to recirculate air throughout the lower compartment spaces to prevent hot spots from developing. This is a safety function. Otherwise, the containment air cooling systems are not required for maintenance of temperature limits within the primary containment in the event of an accident, and therefore, are not engineered safety features. However, the reactor containment penetration valves for the instrument room air-conditioning chilled water system have a Nuclear Safety Class designation in accordance with ANS Safety Class 2A.

The capability of assuring containment ambient temperature levels and the anticipated degradation of equipment performance if temperature levels are exceeded are discussed in Section 3.11.

To prevent damage to adjacent safety related equipment necessary for the plant safe shutdown, UCC and CRDM air cooling assemblies, instrument room fan-coil units, water cooled condenser portions of the instrument room water chillers, ductwork and duct supports, and chilled water piping and pipe supports are designed and installed to Seismic Category I(L) requirements, and the LCC units (excluding cooling coils), fans, ductwork, and duct supports are designed to Seismic Category I requirements.

### 9.4.7.4 Test and Inspection Requirements

Historical Information: Air-cooling assemblies and their temperature-controlling devices which are located within the containment are tested prior to reactor operation and are generally accessible for inspection only during unit shutdown. The system is tested initially as part of the preoperational test program.

After maintenance or modification activities that affect a system function, testing is done to reverify the system or component operations. Instrument room fan-coil units, control devices, and containment-isolation chilled-water valves are accessible for periodic inspection. Water-chilling equipment, pumps, and all essential electrical starting and switchover controls located in the Auxiliary Building are available for periodic inspection.

Instrument room chilled-water containment-isolation valve testing and inspection requirements are discussed in Section 6.2.4.

### 9.4.8 Condensate Demineralizer Waste Evaporator Building Environmental Control System

The Condensate Demineralizer Waste Evaporator (CDWE) Building Environmental Control System is a separate nonsafety air conditioning system which is not required for Unit 2 operation.

The CDWE Building is inside the ABSCE boundary; therefore, it is connected to the AB ventilation exhaust system. The ventilation exhaust system provides a negative pressure inside CDWE Building.

### 9.4.9 Postaccident Sampling Facility (PASF) Environmental Control System (Unit 1 Only)

Unit 2 equipment has been abandoned in place.

**Table 9.4-1**

(DELETED)

**Table 9.4-2 FAILURE MODES AND EFFECTS ANALYSIS INTAKE PUMPING STATION VENTILATION SYSTEM (Page 1 of 7)**

| # | COMPONENT IDENTIFICATION | FUNCTION | FAILURE MODE | POTENTIAL CAUSE | METHOD OF FAILURE DETECTION | EFFECT ON SYSTEM | EFFECT ON PLANT | REMARKS |
|---|---|---|---|---|---|---|---|---|
| **WINTER** | | | | | | | | |
| 1 | All components of the Intake Pumping Station Ventilation System Electrical Equipment Room and Mechanical Equipment Rooms A or B. | Provide heating during the winter. | Total loss of heating | Electrical failure (Loss of power) | Surveillance | Total loss of the heating system resulting in room temperatures lower than design value. | None. See Remarks. | 1) Room temperature is verified once a shift.<br><br>2) Supplemental heating is provided if necessary to maintain the space temperatures above 32°F. |

**Table 9.4-2 FAILURE MODES AND EFFECTS ANALYSIS INTAKE PUMPING STATION VENTILATION SYSTEM (Continued)**
**(Page 2 of 7)**

| # | COMPONENT IDENTIFICATION | FUNCTION | FAILURE MODE | POTENTIAL CAUSE | METHOD OF FAILURE DETECTION | EFFECT ON SYSTEM | EFFECT ON PLANT | REMARKS |
|---|---|---|---|---|---|---|---|---|
| **SUMMER** | | | | | | | | |
| 2 | All components of the Intake Pumping Station Ventilation System; Electrical Equipment Room or Mechanical Equipment Room A or B | Provide ventilation cooling during the Summer | Loss of all Supply and Exhaust Fans concurrent with operation of a Unit Heater 0-HTR-30-715 or -716 in the Electrical Equipment Room | Electrical and/or mechanical failure | Surveillance | Room temperatures higher than design value. | None. See Remarks | 1) Room temperature is verified once a shift.<br><br>2) If the room temperatures are above 104°F, Operator ensures that the duct heaters and unit heaters are "OFF" and that the supply and exhaust fans are operational. If the fans are non-operable, non-essential loads are shed if necessary to maintain the room temperatures at less than 130°F. |

**Table 9.4-2 FAILURE MODES AND EFFECTS ANALYSIS INTAKE PUMPING STATION VENTILATION SYSTEM (Continued)**
**(Page 3 of 7)**

| # | COMPONENT IDENTIFICATION | FUNCTION | FAILURE MODE | POTENTIAL CAUSE | METHOD OF FAILURE DETECTION | EFFECT ON SYSTEM | EFFECT ON PLANT | REMARKS |
|---|---|---|---|---|---|---|---|---|
| **SUMMER** | | | | | | | | |
| 3 | All components of the Intake Pumping Station Ventilation System; Electrical Equipment Room or Mechanical Equipment Room A or B | Provide ventilation cooling during the Summer | Operation of Supply and Exhaust Fans, 0-FAN-30-714A & -714B, concurrent with operation of Duct Heater 0-HTR-30-714 in the Electrical Equipment Room. Total loss of ventilation in the Mechanical Equipment Rooms. | Electrical and/or mechanical failure | Surveillance | Additional heat added to the space. Room temperature will be higher than design value. | None. See Remarks | 1) Room temperature is verified once a shift.<br><br>2) If the room temperatures are above 104°F, Operator ensures that the duct heaters and unit heaters are "OFF" and that the supply and exhaust fans are operational. |

**Table 9.4-2 FAILURE MODES AND EFFECTS ANALYSIS INTAKE PUMPING STATION VENTILATION SYSTEM (Continued)**
**(Page 4 of 7)**

| # | COMPONENT IDENTIFICATION | FUNCTION | FAILURE MODE | POTENTIAL CAUSE | METHOD OF FAILURE DETECTION | EFFECT ON SYSTEM | EFFECT ON PLANT | REMARKS |
|---|---|---|---|---|---|---|---|---|
| **SUMMER** | | | | | | | | |
| 4 | All components of the intake Pumping Station Ventilation System; Electrical Equipment Room, or Mechanical Equipment Room A or B | Provide ventilation cooling during the Summer | Loss of all Supply and Exhaust Fans concurrent with operation of a Unit Heater 0-HTR-30-710 or -711 in Mechanical Equipment Room A | Electrical and/or mechanical failure | Surveillance | Room temperatures higher than design value. | None. See Remarks | 1) Room temperature is verified once a shift.<br><br>2) If the room temperatures are above 104°F, Operator ensures that the duct heaters and unit heaters are "OFF" and that the supply and exhaust fans are operational. If the fans are non-operable, non-essential loads are shed if necessary to maintain the room temperatures at less than 130°F. |

**Table 9.4-2 FAILURE MODES AND EFFECTS ANALYSIS INTAKE PUMPING STATION VENTILATION SYSTEM (Continued)**
**(Page 5 of 7)**

| # | COMPONENT IDENTIFICATION | FUNCTION | FAILURE MODE | POTENTIAL CAUSE | METHOD OF FAILURE DETECTION | EFFECT ON SYSTEM | EFFECT ON PLANT | REMARKS |
|---|---|---|---|---|---|---|---|---|
| **SUMMER** | | | | | | | | |
| 5 | All components of the Intake Pumping Station Ventilation System; Electrical Equipment Room or Mechanical Equipment Room A or B | Provide ventilation cooling during the Summer | Operation of Supply and Exhaust Fans, 0-FAN-30-708A & -708B, concurrent with operation of Duct Heater 0-HTR-30-708 in Mechanical Equipment Room A. Total loss of ventilation in the Electrical Equipment Room and Mechanical Equipment Room B. | Electrical and/or mechanical failure | Surveillance | Additional heat added to the space. Room temperature will be higher than design value. | None. See Remarks | 1) Room temperature is verified once a shift.<br><br>2) If the room temperatures are above 104°F, Operator ensures that the duct heaters and unit heaters are "OFF" and that the supply and exhaust fans are operational. |

**Table 9.4-2 FAILURE MODES AND EFFECTS ANALYSIS INTAKE PUMPING STATION VENTILATION SYSTEM (Continued)**
**(Page 6 of 7)**

| # | COMPONENT IDENTIFICATION | FUNCTION | FAILURE MODE | POTENTIAL CAUSE | METHOD OF FAILURE DETECTION | EFFECT ON SYSTEM | EFFECT ON PLANT | REMARKS |
|---|---|---|---|---|---|---|---|---|
| **SUMMER** | | | | | | | | |
| 6 | All components of the intake Pumping Station Ventilation System: Electrical Equipment Room, or Mechanical Equipment Room A or B | Provide ventilation cooling during the Summer | Loss of all Supply and Exhaust Fans concurrent with operation of a Unit Heater 0-HTR-30-712 or -713 in Mechanical Equipment Room B | Electrical and/or mechanical failure | Surveillance | Room temperatures higher than design value. | None. See Remarks | 1) Room temperature is verified once a shift.<br><br>2) If the room temperatures are above 104°F, Operator ensures that the duct heaters and unit heaters are "OFF" and that the supply and exhaust fans are operational. If the fans are non-operable, non-essential loads are shed if necessary to maintain the room temperatures at less than 130°F. |

**Table 9.4-2 FAILURE MODES AND EFFECTS ANALYSIS INTAKE PUMPING STATION VENTILATION SYSTEM (Continued)**
**(Page 7 of 7)**

| # | COMPONENT IDENTIFICATION | FUNCTION | FAILURE MODE | POTENTIAL CAUSE | METHOD OF FAILURE DETECTION | EFFECT ON SYSTEM | EFFECT ON PLANT | REMARKS |
|---|---|---|---|---|---|---|---|---|
| **SUMMER** | | | | | | | | |
| 7 | All components of the Intake Pumping Station Ventilation System; Electrical Equipment Room or Mechanical Equipment Room A or B | Provide ventilation cooling during the Summer | Operation of Supply and Exhaust Fans, N0-FAN-30-709A & -709B, concurrent with operation of Duct Heater 0-HTR-30-709 in Mechanical Equipment Room B. Total loss of ventilation in the Electrical Equipment Room and Mechanical Equipment Room A. | Electrical and/or mechanical failure | Surveillance | Additional heat added to the space. Room temperature will be higher than design value. | None. See Remarks | 1) Room temperature is verified once a shift.<br><br>2) If the room temperatures are above 104°F, Operator ensures that the duct heaters and unit heaters are "OFF" and that the supply and exhaust fans are operational. |

**Table 9.4-3 FAILURE MODES AND EFFECTS ANALYSIS FOR ACTIVE FAILURES SUBSYSTEM: SAFETY FEATURE EQUIPMENT COOLERS (Sheet 1 of 21)**

| Item No. | Component | Function | Failure Mode | Potential Cause | Method of Detection | Effect on System | Effect on Plant | Remarks |
|---|---|---|---|---|---|---|---|---|
| 1 | 2-PMCL-30-180-A<br><br>Safety Injection Pump 2A-A Cooler (Train A) | Provides cooling air to SI Pump 2A-A Room | Fails to start, fails while running; Spuriously stops. | Mechanical failure; Train A power failure; auto-start signal failure; Operator error (handswitch placed in wrong position) | Status monitor light in MCR for 2-FCV-67-176-A fully open (2-ZS-67-176). Fan motor running light on MCC. | Loss of cooling to SIP 2A-A room with the potential for loss of SIP 2A-A. | None. Train B SI Pump is not affected by the failure of Train A pump room cooler, and is 100% redundant to Train A pump.<br><br>See Remark # 3. | 1. Train A and Train B pump/cooler sets are in separate rooms. Review of schematics for the Train A and B coolers shows the trains to be independent. The cooler automatically starts upon high temperature on 2-TS-30-180-A or SI Pump 2A-A start; and, manually by local handswitch 21-HS-30-180.<br><br>2. The Cooler Fan and the flow control valve 2-FCV-67-176-A are interlocked to operate together.<br><br>3. Train B equipment is located in SIP Room 2B. Failure of the Train A equipment, will not adversely impact Train B SI pump operation. |

**Table 9.4-3 FAILURE MODES AND EFFECTS ANALYSIS FOR ACTIVE FAILURES SUBSYSTEM: SAFETY FEATURE EQUIPMENT COOLERS (Sheet 2 of 21)**

| Item No. | Component | Function | Failure Mode | Potential Cause | Method of Detection | Effect on System | Effect on Plant | Remarks |
|---|---|---|---|---|---|---|---|---|
| 2 | 2-PMCL-30-179-B<br><br>Safety Injection Pump 2B-B Cooler (Train B) | Provides cooling air to SI Pump 2B-B Room | Fails to start, fails while running; Spuriously stops. | Mechanical failure; Train B power failure; auto-start signal failure; Operator error (handswitch placed in wrong position) | Status monitor light in MCR for 2-FCV-67-182 fully open (2-ZS-67-182). Fan motor running light on MCC. | Loss of cooling to SIP 2B-B room with the potential for loss of SIP 2B-B. | None. Train A SI Pump is not affected by the failure of Train B pump room cooler, and is 100% redundant to Train B pump.<br><br>See Remark # 3. | 1. Train A and Train B pump/cooler sets are in separate rooms. Review of schematics for the Train A and B coolers shows the trains to be independent. The cooler automatically starts upon high temperature on 2-TS-30-179-B or SI Pump 2B-B start; and, manually by local handswitch 2-HS-30-179.<br><br>2. The Cooler Fan and the flow control valve 2-FCV-67-182 are interlocked to operate together.<br><br>3. Train A equipment is located in SIP Room 2A. Failure of the Train B equipment will not adversely impact Train A SI pump operation. |

**Table 9.4-3 FAILURE MODES AND EFFECTS ANALYSIS FOR ACTIVE FAILURES SUBSYSTEM: SAFETY FEATURE EQUIPMENT COOLERS (Sheet 3 of 21)**

| Item No. | Component | Function | Failure Mode | Potential Cause | Method of Detection | Effect on System | Effect on Plant | Remarks |
|---|---|---|---|---|---|---|---|---|
| 3 | 2-FCV-67-176-A<br><br>Essential Raw Cooling Water Flow Control Valve for the Safety Injection System Pump 2A-A Cooler. | Provides flowpath for cooling water from the ERCW Header 2A to the cooler for Pump 2A-A | Fails to open, stuck closed | Mechanical failure; Opening signal failure | Status monitor light in MCR (2-ZS-67-176) | Loss of cooling water to SIP 2A-A pump room cooler with the potential for loss of SIP 2A-A. | None. Train B SI Pump is not affected by the failure of Train A pump room cooler, and is 100% redundant to Train A pump. | 2-FCV-67-176-A<br>FCV fails open on loss of power or air. |
| 4 | 2-FCV-67-182-B<br><br>Essential Raw Cooling Water Flow Control Valve for the Safety Injection System Pump 2B-B Cooler. | Provides flowpath for cooling water from the ERCW Header 2B to the cooler for Pump 2B-B | Fails to open, stuck closed | Mechanical failure; Opening signal failure | Status monitor light in MCR (2-ZS-67-182) | Loss of cooling water to SIP 2B-B pump room cooler with the potential for loss of SIP 2B-B. | None. Train A SI Pump is not affected by the failure of Train B pump room cooler, and is 100% redundant to Train B pump. | 2-FCV-67-182-B<br>FCV fails open on loss of power or air. |
| 5 | 2-PMCL-30-175-A<br><br>Residual Heat Removal Pump 2A-A Cooler (Train A). | Provides cooling air to RHR Pump 2A-A Room. | Fails to start, fails while running; Spuriously stops. | Mechanical failure; Train A Power failure; Auto-start signal failure; Operator error (handswitch placed in wrong position). | Fan motor running light on MCC.<br><br>Status monitor light in MCR for 2-FCV-67-188 (2-ZS-67-188) | Loss of cooling water to RHR Pump 2A-A Room cooler with the potential loss of RHR Pump 2A-A. | None.<br>Train B RHR Pump is not affected by the failure of Train A Pump Room Cooler and is 100% redundant to Train A Pump. | Train A and Train B RHR pump/cooler sets are in separate rooms. Review of the schematics for the Train A and Train B coolers shows the trains to be independent. The cooler is started automatically upon high temperature at 2-TS-30-175-A, or RHR Pump 2A-A start; Manually by local handswitch 2-HS-30-175. |

**Table 9.4-3 FAILURE MODES AND EFFECTS ANALYSIS FOR ACTIVE FAILURES SUBSYSTEM: SAFETY FEATURE EQUIPMENT COOLERS (Sheet 4 of 21)**

| Item No. | Component | Function | Failure Mode | Potential Cause | Method of Detection | Effect on System | Effect on Plant | Remarks |
|---|---|---|---|---|---|---|---|---|
| 6 | 2-PMCL-30-176-B<br><br>Residual Heat Removal Pump 2B-B Cooler (Train B) | Provides cooling air to RHR Pump 2B-B Room | Fails to start, fails while running; Spuriously stops. | Mechanical failure; Train B power failure; auto-start signal failure; Operator error (handswitch placed in wrong position) | Fan motor running light on MCC.<br><br>Status monitor light in MCR for 2-FCV-67-190 (2-ZS-67-190) | Loss of cooling to RHR Pump 2B-B Room with the potential loss of RHR 2B-B. | None. Train A RHR Pump is not affected by the failure of Train B Pump Room Cooler, and is 100% redundant to Train b pump. | Train A and Train B RHR pump/cooler sets are in separate rooms. Review of the schematics for the Train A and Train B coolers shows the trains to be independent. The cooler started automatically upon high temperature at 2-TS-30-176-B or RHR Pump 2B-B start; Manually by local handswitch 2-HS-30-176. |
| 7 | 2-FCV-67-188-A<br><br>Essential Raw Cooling Water Flow Control Valve for the Residual Heat Removal System Pump 2A-A Cooler. | Provides flowpath for cooling water from the ERCW Header to the cooler for RHR Pump 2A-A. | See 'remarks' column | See 'remarks' column. | See 'remarks' column. | See 'remarks' column. | See 'remarks' column. | 2-FCV-67-188-A has been electrically disconnected due to App. 'R' interaction to keep the valve permanently open. |
| 8 | 2-FCV-67-190-B<br><br>Essential Raw Cooling Water Flow Control Valve for the Residual Heat Removal System Pump 2B-B Cooler. | Provides flowpath for cooling water from the ERCW Header to the cooler for RHR Pump 2B-B. | See 'remarks' column | See 'remarks' column | See 'remarks' column | See 'remarks' column | See 'remarks' column | 2-FCV-67-190-B has been electrically disconnected due to App. 'R' interaction to keep the valve permanently open. |

**Table 9.4-3 FAILURE MODES AND EFFECTS ANALYSIS FOR ACTIVE FAILURES SUBSYSTEM: SAFETY FEATURE EQUIPMENT COOLERS (Sheet 5 of 21)**

| Item No. | Component | Function | Failure Mode | Potential Cause | Method of Detection | Effect on System | Effect on Plant | Remarks |
|---|---|---|---|---|---|---|---|---|
| 9 | 2-PMCL-30-177-A<br><br>Containment Spray Pump 2A-A Cooler (Train A) | Provides cooling air to CS Pump 2A-A Room | Fails to start, fails while running; Spuriously stops. | Mechanical failure; Train A power failure; Auto-start signal failure; Operator error (handswitch placed in wrong position) | Status monitor light in MCR for 2-FCV-67-184-A (2-ZS-67-184). Fan motor running light on MCC. | Loss of cooling to CSP 2A-A Room with the potential for loss of CSP 2A-A. | None.<br>Train B Pump is not affected by the failure of Train A pump/cooler, and is 100% redundant to Train A pump. | Equipment includes fan and motor. Train A and Train B CS pump/cooler sets are in separate rooms. Review of the schematics for the Train A and B coolers shows the trains to be independent. The cooler is started automatically upon high temperature at 2-TS-30-177-A or CS Pump 2A-A start; manually by local handswitch 2-HS-30-177.<br><br>The cooler and the flow control valve 2-FCV-67-184 are interlocked to operate together. |
| 10 | 2-PMCL-30-178-B<br><br>Containment Spray Pump 2B-B Cooler (Train B) | Provides cooling air to CS Pump 2B-B Room | Fails to start, fails while running; Spuriously stops. | Mechanical failure; Train B power failure; Auto-start signal failure; Operator error (handswitch placed in wrong position) | Status monitor light in MCR for 2-FCV-67-186-B (2-ZS-67-186). Fan motor running light on MCC. | Loss of cooling to CSP 2B-B Room with the potential for loss of CSP 2B-B. | None.<br>Train A Pump is not affected by the failure of Train B pump/cooler, and is 100% redundant to Train B pump. | Equipment includes fan and motor. Train A and Train B CS pump/cooler sets are in separate rooms. Review of schematics for the Train A and B coolers shows the trains to be independent. The cooler is started automatically upon high temperature at 2-TS-30-178-B or CS Pump 2B-B start; manually by local handswitch 2-HS-30-178.<br><br>The cooler and the flow control valve 2-FCV-67-186 are interlocked to operate together. |

**Table 9.4-3 FAILURE MODES AND EFFECTS ANALYSIS FOR ACTIVE FAILURES SUBSYSTEM: SAFETY FEATURE EQUIPMENT COOLERS (Sheet 6 of 21)**

| Item No. | Component | Function | Failure Mode | Potential Cause | Method of Detection | Effect on System | Effect on Plant | Remarks |
|---|---|---|---|---|---|---|---|---|
| 11 | 2-FCV-67-184<br><br>Essential Raw Cooling Water Flow Control Valve for the Containment Spray System Pump 2A-A Cooler. | Provides flowpath for cooling water from the ERCW Header to the cooler for CS Pump 2A-A. | Fails to open, stuck closed. | Mechanical failure; Opening signal failure. | Status monitor light in MCR (2-ZS-67-184). | Loss of cooling to CSP 2A-A room with the potential for loss of CSP 2A-A. | None.<br>Train B CS Pump is not affected by the failure of Train A pump room cooler, and is 100% redundant to Train A pump. | 2-FCV-67-184 fails to the open position on loss of power or air. |
| 12 | 2-FCV-67-186<br><br>Essential Raw Cooling Water Flow Control Valve for the Containment Spray System Pump 2B-B Cooler. | Provides flowpath for cooling water from the ERCW Header to the cooler for CS Pump 2B-B. | Fails to open, stuck closed. | Mechanical failure; Opening signal failure. | Status monitor light in MCR (2-ZS-67-186). | Loss of cooling to CSP 2B-B room with the potential for loss of CSP 2B-B. | None.<br>Train A CS Pump is not affected by the failure of Train B pump room cooler, and is 100% redundant to Train B pump. | 2-FCV-67-186-B fails to the open position on loss of power or air. |
| 13 | 2-PMCL-30-183-A<br><br>Centrifugal Charging Pump 2A-A Cooler (Train A). | Provides cooling air to CC Pump 2A-A Room. | Fails to start, fails while running; Spuriously stops. | Mechanical failure; Train A power failure; Auto-start signal failure; Operator error (handswitch placed in wrong position). | Fan motor running light on MCC.<br><br>Status monitor light in MCR for 2-FCV-67-168 (2-ZS-168) | Loss of cooling to CC pump 2A-A Room with the potential for loss of CC Pump 2A-A. | None.<br>Train B CC pump is not affected by the failure of Train A pump/cooler, and is 100% redundant to Train A pump. | Equipment includes fan and motor. Train A and Train B pump/cooler sets are in separate rooms. Review of schematics for the train A and B coolers shows the trains to be independent. The cooler automatically starts upon high temperature at 2-TS-30-183-A, or pump 2A-A start; Manually by local handswitch 2-HS-30-183. |

**Table 9.4-3 FAILURE MODES AND EFFECTS ANALYSIS FOR ACTIVE FAILURES SUBSYSTEM: SAFETY FEATURE EQUIPMENT COOLERS (Sheet 7 of 21)**

| Item No. | Component | Function | Failure Mode | Potential Cause | Method of Detection | Effect on System | Effect on Plant | Remarks |
|---|---|---|---|---|---|---|---|---|
| 14 | 2-PMCL-30-182-B<br><br>Centrifugal Charging Pump 2B-B Cooler (Train B). | Provides cooling air to CC Pump 2B-B Room | Fails to start, fails while running; Spuriously stops. | Mechanical failure; Train B power failure; Auto-start signal failure; Operator error (handswitch placed in wrong position) | Fan motor running light on MCC.<br><br>Status monitor light in MCR for 2-FCV-67-170 (2-ZS-170) | Loss of cooling to CC pump 2B-B Room with the potential for loss of CC pump 2B-B. | None.<br>Train A CC pump is not affected by the failure of Train B pump/cooler, and is 100% redundant to Train B pump. | Equipment includes fan and motor. Train A and Train B pump/cooler sets are in separate rooms. Review of schematics for the Train A and B coolers shows the trains to be independent. The cooler automatically starts upon high temperature at 2-TS-30-182-B or pump 2B-B start; Manually by local handswitch 2-HS-30-182. |
| 15 | 2-FCV-67-168<br><br>Essential Raw Cooling water Flow Control Valve for the centrifugal Charging Pump Room 2A-A Cooler. | Provides flowpath for cooling water from the ERCW Header to the cooler for CC Pump 2A-A. | See 'Remarks' column | See 'Remarks' column | See 'Remarks' column | See 'Remarks' column | See 'Remarks' column | 2-FCV-67-168 is electrically disconnected to keep the valve permanently open. |
| 16 | 2-FCV-67-170<br><br>Essential Raw Cooling water Flow Control Valve for the centrifugal Charging Pump Room 2B-B Cooler. | Provides flowpath for cooling water from the ERCW Header to the cooler for CC Pump 2B-B. | See 'Remarks' column | See 'Remarks' column | See 'Remarks' column | See 'Remarks' column | See 'Remarks' column | 2-FCV-67-170 is electrically disconnected to keep the valve permanently open. |

**Table 9.4-3 FAILURE MODES AND EFFECTS ANALYSIS FOR ACTIVE FAILURES SUBSYSTEM: SAFETY FEATURE EQUIPMENT COOLERS (Sheet 8 of 21)**

| Item No. | Component | Function | Failure Mode | Potential Cause | Method of Detection | Effect on System | Effect on Plant | Remarks |
|---|---|---|---|---|---|---|---|---|
| 17 | 1-PMCL-30-190-A CCS and Aux. FW Pump Cooler A-A. | Provides cooling air to the CCS and Aux. FW pumps space. | Fails to start, fails while running; Spuriously stops. | Mechanical failure; Train A power failure; Auto-standby start signal failure; Operator error (handswitch placed in wrong position) | Status monitor light in MCR for 1-FCV-67-162 (1-ZS-67-162). Indicating light on MCC for fan motor running. | Loss of redundancy in providing cooling air for CCS and Aux FW pumps space. | None. The Train B Cooler B-B is available to start on high temperature (1-TS-30-191-A-B) and is 100% redundant to the Train A cooler. | The cooler automatically starts upon Train A ABI signal or high temperature sensed by 1-TS-30-190A-A. Cooler fan motor and 1-FSV-67-162-A are interlocked to open 1-FCV-67-162-A for ERCW supply on cooler start. Review of the schematics for the coolers A-A and B-B shows their independence. |
| 18 | 1-PMCL-30-191-B<br><br>CCS and Aux. FW Pump/Cooler B-B | Provides cooling air to the CCS and Aux. FW pumps space. | Fails to start, fails while running; Spuriously stops. | Mechanical failure; Train B power failure; Auto-standby start signal failure; Operator error (handswitch placed in wrong position) | Status monitor light in MCR for 1-FCV-67-164-B (1-ZS-67-164). Indicating light on MCC for fan motor running. | Loss of redundancy in providing cooling air for CCS and Aux. FW pumps space. | None. The Train A Cooler A-A is available to start on high temperature (1-TS-30-190A-A) and is 100% redundant to Train B cooler. | The cooler automatically starts upon Train B ABI signal or high temperature sensed by 1-TS-30-191A-B. Cooler fan motor and 1-FSV-67-164-B are interlocked to open 1-FCV-67-164 for ERCW Supply on cooler start. Review of the schematics for the coolers A-A and B-B shows their independence. |
| 19 | 1-FCV-67-162<br><br>Essential Raw Cooling Water Flow Control Valve for the CCS and Aux. FW Pump Cooler A-A. | Provides flowpath for cooling water from the ERCW Header to the Cooler for Pump A-A. | Fails to open, stuck closed. | Mechanical failure; Opening signal failure. | Status monitor light in MCR (or 1-ZS-67-162). | Loss of redundancy in providing cooling to CCS and Aux FW Pump space. | None. Train B pump space cooler is not affected by the failure of Train A pump room cooler, and is 100% redundant to the train A pump space cooler. | 1-FCV-67-162 fails open on loss of power or air. |

**Table 9.4-3 FAILURE MODES AND EFFECTS ANALYSIS FOR ACTIVE FAILURES SUBSYSTEM: SAFETY FEATURE EQUIPMENT COOLERS (Sheet 9 of 21)**

| Item No. | Component | Function | Failure Mode | Potential Cause | Method of Detection | Effect on System | Effect on Plant | Remarks |
|---|---|---|---|---|---|---|---|---|
| 20 | 1-FCV-67-164<br><br>Essential Raw Cooling Water Flow Control Valve for the CCS and Aux. FW Pump Cooler B-B. | Provides flowpath for cooling water from the ERCW Header to the Cooler for Pump B-B. | Fails to open, stuck closed. | Mechanical failure; Opening signal failure. | Status monitor light in MCR (or 1-ZS-67-164). | Loss of redundancy in providing cooling to CCS and Aux FW Pump space. | None.<br>Train A pump space cooler is not affected by the failure of Train B pump room cooler, and is 100% redundant to the Train B pump space cooler. | 1-FCV-67-164 fails open on loss of power or air. |
| 21 | 2-CLR-30-200-A<br><br>EGTS Cooler A-A | Provides cooling air to the EGTS Room | Fails to start, fails while running; Spuriously stops. | Mechanical failure; Train A power failure; Auto-standby start signal failure; Operator error (handswitch placed in wrong position) | Status monitor light in MCR for 2-FCV-67-336 (2-ZS-67-336). Fan motor running light on MCC. | Loss of redundancy in providing cooling air for the EGTS Room. | None.<br>The Train B Cooler is available to start on high temperature (2-TS-30-207A-B) and is 100% redundant to Train A cooler. | The cooler automatically starts upon Train A ABI signal or high temperature at 2-TS-30-200A-A. Cooler fan motor and 2-FSV-67-336-A are interlocked to open 2-FCV-67-336 for ERCW supply on cooler start. Review of the schematics for the coolers A-A and B-B shows their independence. |
| 22 | 2-CLR-30-207-B<br><br>EGTS Cooler B-B | Provides cooling air to the EGTS Room | Fails to start, fails while running; Spuriously stops. | Mechanical failure; Train B power failure; Auto-standby start signal failure; Operator error (handswitch placed in wrong position) | Status monitor light in MCR for 2-FCV-67-338 (2-ZS-67-338). Fan motor running light on MCC. | Loss of redundancy in providing cooling air for the EGTS Room. | None.<br>The Train A Cooler is available to start on high temperature at 2-TS-30-200A-A and is 100% redundant to Train B cooler. | The cooler automatically starts upon Train B ABI signal or high temperature at 2-TS-30-207A-B. Cooler fan motor and 2-FSV-67-338-B are interlocked to open 2-FCV-67-338 for ERCW supply on cooler start. Review of the schematics for the coolers A-A and B-B shows their independence. |
| 23 | 2-FCV-67-336<br><br>Essential Raw Cooling Water Flow Control Valve for the EGTS Room Cooler A-A. | Provides flowpath for cooling water from the ERCW Header to the A-A cooler for the EGTS Rooms. | Fails to open, stuck closed. | Mechanical failure; signal failure. | Status monitor light in MCR (2-ZS-67-336) | Loss of redundancy in providing cooling to EGTS room. | None.<br>Train B cooler is not affected by the failure of Train A room cooler, and is 100% redundant to the Train A room cooler. | 2-FCV-67-336 fails open on loss of power or air. |

**Table 9.4-3 FAILURE MODES AND EFFECTS ANALYSIS FOR ACTIVE FAILURES SUBSYSTEM: SAFETY FEATURE EQUIPMENT COOLERS (Sheet 10 of 21)**

| Item No. | Component | Function | Failure Mode | Potential Cause | Method of Detection | Effect on System | Effect on Plant | Remarks |
|---|---|---|---|---|---|---|---|---|
| 24 | 2-FCV-67-338<br><br>Essential Raw Cooling Water Flow Control Valve for the EGTS Room Cooler B-B | Provides flowpath for cooling water from the ERCW Header to the B-B cooler for the EGTS Rooms. | Fails to open, stuck closed. | Mechanical failure; signal failure. | Status monitor light in MCR (2-ZS-67-338). | Loss of redundancy in providing cooling to EGTS room. | None.<br>Train A cooler is not affected by the failure of Train B room cooler, and is 100% redundant to the Train B room cooler. | 2-FCV-67-338 fails open on loss of power or air. |
| 25 | 0-PMCL-30-192-A<br><br>CCS TB Booster and Spent Fuel Pit Pump Cooler A-A | Provides cooling air to the CCS TB Booster and Spent Fuel Pit Cooler Space. | Fails to start, fails while running; Spuriously stops. | Mechanical failure; Train A power failure; Auto-standby start signal failure; Operator error (handswitch placed in wrong position) | Status monitor light in MCR for 1-FCV-67-213-A (1-ZS-67-213) Fan motor running light on MCC. | Loss of redundancy in providing cooling air for CCS TB Booster and Spent Fuel Pit Cooler Space | None.<br>The Train B Cooler is available to start on high temperature (0-TS-30-193A-B) and is 100% redundant to the Train A cooler. | The cooler automatically starts upon Train A ABI signal or high temperature at 0-TS-30-192A-A. Cooler fan motor and 1-FSV-67-213-A are interlocked to open 1-FCV-67-213-A for ERCW supply on cooler start. Review of the schematics for the coolers A-A and B-B shows their independence. |
| 26 | 0-PMCL-30-193-B<br><br>CCS TB Booster and Spent Fuel Pit Cooler B-B | Provides cooling air to the CCS TB Booster and Spent Fuel Pit Cooler B-B space. | Fails to start, fails while running; Spuriously stops. | Mechanical failure; Train B power failure; Auto-standby start signal failure; Operator error (handswitch placed in wrong position) | Status monitor light in MCR for 1-FCV-67-215 (1-ZS-67-215). Fan motor running light on MCC. | Loss of redundancy in providing cooling air for CCS TB Booster and Spent Fuel Pit Cooler space. | None.<br>The Train A Cooler is available to start on high temperature (0-TS-30-192A-A) and is 100% redundant to the Train B cooler. | The cooler automatically starts upon Train B ABI signal or high temperature at 0-TS-30-193A-B. Cooler fan motor and 1-FSV-67-215-B are interlocked to open 1-FCV-67-215-B for ERCW supply on cooler start. Review of the schematics for the coolers A-A and B-B shows their independence. |
| 27 | 1-FCV-67-213-A<br><br>Essential Raw Cooling Water Flow Control Valve for the CCS TB Booster and Spent Fuel Pit Cooler A-A | Provides flowpath for cooling water from the ERCW Header to the Cooler A-A. | Fails to open, stuck closed. | Mechanical failure; Opening signal failure. | Status monitor light in MCR (1-ZS-67-213) | Loss of redundancy in providing cooling air to CCS TB Booster and Spent Fuel Pit Coolers space. | None.<br>Train B Pump area cooler is not affected by the failure of Train A pump area cooler, and is 100% redundant to the Train A pump area cooler. | 1-FCV-67-213-A fails open on loss of power or air. |

**Table 9.4-3 FAILURE MODES AND EFFECTS ANALYSIS FOR ACTIVE FAILURES SUBSYSTEM: SAFETY FEATURE EQUIPMENT COOLERS (Sheet 11 of 21)**

| Item No. | Component | Function | Failure Mode | Potential Cause | Method of Detection | Effect on System | Effect on Plant | Remarks |
|---|---|---|---|---|---|---|---|---|
| 28 | 1-FCV-67-215-B<br><br>Essential Raw Cooling Water Flow Control Valve for the CCS TB Booster and Spent Fuel Pit Cooler B-B | Provides flowpath for cooling water from the ERCW Header to the Cooler B-B. | Fails to open, stuck closed. | Mechanical failure; Opening signal failure. | Status monitor light in MCR (1-ZS-67-215) | Loss of redundancy in providing cooling air to CCS TB Booster and Spent Fuel Pit Coolers space. | None.<br>Train A Pump area cooler is not affected by the failure of Train B pump area cooler, and is 100% redundant to the Train B pump area cooler. | 1-FCV-67-215-B fails open on loss of power or air. |
| 29 | 0-BKD-31-2956<br><br>CCS TB Booster and Spent Fuel Pit Pump Cooler A-A Backdraft Damper | Provides flowpath for cool air flow from Cooler A-A to common discharge headers to room. | Fails to open (stuck closed). | Mechanical failure | Local position indicator attachment on the damper would indicate if damper was stuck closed | Loss of redundancy in providing cooling air to room. | None.<br>The standby Train B cooler will start upon high temperature on 0-TS-30-193B-B. | |
| | | Protects standby Cooler A-A from reverse air flow from running cooler B-B. | Fails to backseat (stuck open) when Train B Cooler B-B is running. | Mechanical failure | Local position indicator attachment on the damper would indicate if damper was stuck open. | Loss of redundancy in providing cooling air to room. | None (See remarks) | Operability of the dampers is periodically verified. |
| 30 | 0-BKD-31-2957<br><br>CCS TB Booster and Spent Fuel Pit Pump Cooler B-B Backdraft Damper | Provides flowpath for cool air flow from Cooler B-B to common discharge headers to room. | Fails to open (stuck closed). | Mechanical failure | Local position indicator attachment on the damper would indicate if damper was stuck closed. | Loss of redundancy in providing cooling air to room. | None.<br>The standby Train A cooler will start upon high temperature on 0-TS-30-192B-A. | Operability of the dampers is periodically verified. |

**Table 9.4-3 FAILURE MODES AND EFFECTS ANALYSIS FOR ACTIVE FAILURES SUBSYSTEM: SAFETY FEATURE EQUIPMENT COOLERS (Sheet 12 of 21)**

| Item No. | Component | Function | Failure Mode | Potential Cause | Method of Detection | Effect on System | Effect on Plant | Remarks |
|---|---|---|---|---|---|---|---|---|
| | | Protects standby Cooler B-B from reverse air flow from running cooler A-A. | Fails to backseat (stuck open) when Train A Cooler A-A is running. | Mechanical failure | Local position indicator attachment on the damper would indicate if damper was stuck open. | Loss of redundancy in providing cooling air to room. | None (See remarks) | Operability of the dampers is periodically verified. |
| 31 | 2-PMCL-30-184-A<br><br>AFW and BAT Cooler Fan A-A | Provides cooling air to the AFW and BAT pumps space | Fails to start, fails while running; Spuriously stops. | Mechanical failure; Train A power failure; Auto-standby start signal failure; Operator error (handswitch placed in wrong position) | Status monitor light in MCR for 2-FCV-67-217 (2-ZS-67-217). Fan motor running light on MCC. | Loss of redundancy in providing cooling air for AFW and BAT pumps space | None.<br>The Train B Cooler is available to start on high temperature (2-TS-30-185A-B) and is 100% redundant to Train A cooler. | The cooler automatically starts upon Train A ABI signal or high temperature at 2-TS-30-184A-A. Cooler fan motor and 2-FSV-67-217-A are interlocked to open 2-FCV-67-217 for ERCW supply on cooler start. Review of the schematics for the coolers A-A and B-B shows their independence. |
| 32 | 2-PMCL-30-185-B<br><br>AFW and BAT Cooler Fan B-B | Provides cooling air to the AFW and BAT pumps space | Fails to start, fails while running; Spuriously stops. | Mechanical failure; Train B power failure; Auto-standby start signal failure; Operator error (handswitch placed in wrong position) | Status monitor light in MCR for 2-FCV-67-219 (2-ZS-67-219). Fan motor running light on MCC. | Loss of redundancy in providing cooling air for AFW and BAT pumps space | None.<br>The Train A Cooler is available to start on high temperature (2-TS-30-184A-A) and is 100% redundant to Train B cooler. | The cooler automatically starts upon Train B ABI signal or high temperature at 2-TS-30-185A-B. Cooler fan motor and 2-FSV-67-219-B are interlocked to open 2-FCV-67-219 for ERCW supply on cooler start. Review of the schematics for the coolers A-A and B-B shows their independence. |
| 33 | 2-FCV-67-217<br><br>Essential Raw Cooling Water Flow Control Valve for the AFW and BAT Cooler A-A | Provides flowpath for cooling water from the ERCW Header to the Cooler for Pump A-A. | Fails to open, stuck closed. | Mechanical failure; Opening signal failure. | Status monitor light in MCR (2-ZS-67-217) | Loss of redundancy in providing cooling to AFW and BAT pumps space. | None.<br>Train B Pump room cooler is not affected by the failure of Train A pump room cooler, and is 100% redundant to the Train A pump room cooler. | 2-FCV-67-217 fails open on loss of power or air. |

**Table 9.4-3 FAILURE MODES AND EFFECTS ANALYSIS FOR ACTIVE FAILURES SUBSYSTEM: SAFETY FEATURE EQUIPMENT COOLERS (Sheet 13 of 21)**

| Item No. | Component | Function | Failure Mode | Potential Cause | Method of Detection | Effect on System | Effect on Plant | Remarks |
|---|---|---|---|---|---|---|---|---|
| 34 | 2-FCV-67-219<br><br>Essential Raw Cooling Water Flow Control Valve for the AFW and BAT Cooler B-B | Provides flowpath for cooling water from the ERCW Header to the Cooler for Pump B-B. | Fails to open, stuck closed. | Mechanical failure; Opening signal failure. | Status monitor light in MCR (2-ZS-67-219) | Loss of redundancy in providing cooling to AFW and BAT pumps space. | None.<br>Train A Pump room cooler is not affected by the failure of Train B pump room cooler, and is 100% redundant to the Train B pump room cooler. | 2-FCV-67-219 fails open on loss of power or air. |
| 35 | 2-BKD-31-2952<br><br>Aux FW and BAT Pump Cooler A-A Backdraft Damper | Provides flowpath for cool air flow from Cooler A-A to common discharge header to room. | Fails to open (stuck closed). | Mechanical failure | Local position indicator attachment on the damper would indicate if damper was stuck closed | Loss of redundancy in providing cooling air to room. | None.<br>The standby Train B cooler will start upon high temperature on 2-TS-30-185B-B. | Operability of the dampers is peridoically verified. |
| | | Protects standby Cooler A-A from reverse air flow from running cooler B-B. | Fails to backseat (stuck open) when Train B Cooler B-B is running. | Mechanical failure | Local position indicator attachment on the damper would indicate if damper was stuck open. | Loss of redundancy in providing cooling air to room. | None | . |
| 36 | 2-BKD-31-2953<br><br>Aux FW and BAT Pump Cooler B-B Backdraft Damper | Provides flowpath for cool air flow from Cooler B-B to common discharge header to room. | Fails to open (stuck closed). | Mechanical failure | Local position indicator attachment on the damper would indicate if damper was stuck closed | Loss of redundancy in providing cooling air to room. | None.<br>The standby Train A cooler will start upon high temperature on 2-TS-30-184B-A. | Operability of the dampers is peridoically verified. |

**Table 9.4-3 FAILURE MODES AND EFFECTS ANALYSIS FOR ACTIVE FAILURES SUBSYSTEM: SAFETY FEATURE EQUIPMENT COOLERS (Sheet 14 of 21)**

| Item No. | Component | Function | Failure Mode | Potential Cause | Method of Detection | Effect on System | Effect on Plant | Remarks |
|---|---|---|---|---|---|---|---|---|
| | | Protects standby Cooler B-B from reverse air flow from running cooler A-A. | Fails to backseat (stuck open) when Train A Cooler A-A is running. | Mechanical failure | Local position indicator attachment on the damper would indicate if damper was stuck open. | Loss of redundancy in providing cooling air to room. | None | . |
| 37 | 2-CLR-30-201-A<br><br>Pipe Chase Cooler Fan 2A-A | Provides cooling air to the pipe chase. | Fails to start, fails while running; Spuriously stops. | Mechanical failure; Train A power failure; Auto-standby start signal failure; Operator error (handswitch placed in wrong position) | Status monitor light in MCR for 2-FCV-67-342-A (2-ZS-67-342-A). Fan motor running light on MCC. | Loss of redundancy in providing cooling air for the Pipe Chase. | None. The Train B Cooler Fan 2B-B is available to start on high temperature (2-TS-30-202A-B) and is 100% redundant to Train A cooler. | The cooler automatically starts upon Train A ABI signal or high temperature at 2-TS-30-201A-A. Cooler fan motor and 2-FSV-67-342-A are interlocked to open 2-FCV-67-342-A for ERCW supply on cooler start. Review of the schematics for the coolers A-A nd B-B shows their independence. |
| 38 | 2-CLR-30-202-B<br><br>Pipe Chase Cooler Fan 2-B-B | Provides cooling air to the pipe chase. | Fails to start, fails while running; Spuriously stops. | Mechanical failure; Train B power failure; Auto-standby start signal failure; Operator error (handswitch placed in wrong position) | Status monitor light in MCR for 2-FCV-67-344-B (2-ZS-67-344). Fan motor running light on MCC. | Loss of redundancy in providing cooling air for the Pipe Chase. | None. The Train A Cooler Fan 2A-A is available to start on high temperature at 2-TS-30-201A-A and is 100% redundant to Train B cooler. | The cooler automatically starts upon Train B ABI signal or high temperature at 2-TS-30-202A-B. Cooler fan motor and 2-FSV-67-344-B are interlocked to open 2-FCV-67-344-B for ERCW supply on cooler start. Review of the schematics for the coolers A-A and B-B shows their independence. |
| 39 | 2-FCV-67-342-A<br><br>Essential Raw Cooling Water Flow Control Valve for the Pipe Chase Cooler 2A-A | Provides flowpath for cooling water from the ERCW Header to the Cooler 2A-A. | Fails to open, stuck closed. | Mechanical failure; Opening signal failure. | Status monitor light in MCR (2-ZS-67-342) | Loss of redundancy in providing cooling air to the Pipe Chase. | None.<br>Train B Pump room cooler is not affected by the failure of Train A pump room cooler, and is 100% redundant to the Train A pump room cooler. | 2-FCV-67-342 fails open on loss of power or air. |

**Table 9.4-3 FAILURE MODES AND EFFECTS ANALYSIS FOR ACTIVE FAILURES SUBSYSTEM: SAFETY FEATURE EQUIPMENT COOLERS (Sheet 15 of 21)**

| Item No. | Component | Function | Failure Mode | Potential Cause | Method of Detection | Effect on System | Effect on Plant | Remarks |
|---|---|---|---|---|---|---|---|---|
| 40 | 2-FCV-67-344-B<br><br>Essential Raw Cooling Water Flow Control Valve for the Pipe Chase Cooler 2B-B | Provides flowpath for cooling water from the ERCW Header to the Cooler 2B-B. | Fails to open, stuck closed. | Mechanical failure; Opening signal failure. | Status monitor light in MCR (2-ZS-67-344) | Loss of redundancy in providing cooling air to the Pipe Chase. | None.<br>Train A Pump room cooler is not affected by the failure of Train B pump room cooler, and is 100% redundant to the Train B pump room cooler. | 2-FCV-67-344-B fails open on loss of power or air. |
| 41 | 2-BKD-31-2925<br><br>Pipe Chase Cooler 2A-A Backdraft Damper | Provides flowpath for cool air flow from Cooler 2A-A to Pipe Chase Header. | Fails to open (stuck closed). | Mechanical failure | Local position indicator attachment on the damper would indicate if damper was stuck closed | Loss of redundancy in providing cooling air to Pipe Chase. | None.<br>The standby Train B cooler will start upon high temperature on 2-TS-30-202B-B. | Operability of the dampers is periodically verified. |
| | | Protects standby Cooler 2A-A from reverse air flow from running cooler 2B-B. | Fails to backseat (stuck open) when Train A Cooler 2B-B is running. | Mechanical failure | Local position indicator attachment on the damper would indicate if damper was stuck open. | Loss of redundancy | None (See remarks) | |
| 42 | 2-BKD-31-2937<br><br>Pipe Chase Cooler 2B-B Backdraft Damper | Provides flowpath for cool air flow from Cooler 2B-B to Pipe Chase Header. | Fails to open (stuck closed). | Mechanical failure | Local position indicator attachment on the damper would indicate if damper was stuck closed | Loss of redundancy in providing cooling air to Pipe Chase. | None.<br>The standby Train A cooler will start upon high temperature on 2-TS-30-201B-A. | Operability of the dampers is periodically verified. |

**Table 9.4-3 FAILURE MODES AND EFFECTS ANALYSIS FOR ACTIVE FAILURES SUBSYSTEM: SAFETY FEATURE EQUIPMENT COOLERS (Sheet 16 of 21)**

| Item No. | Component | Function | Failure Mode | Potential Cause | Method of Detection | Effect on System | Effect on Plant | Remarks |
|---|---|---|---|---|---|---|---|---|
| | | Protects standby Cooler 2B-B from reverse air flow from running cooler 2A-A. | Fails to backseat (stuck open) when Train B Cooler 2A-A is running. | Mechanical failure | Local position indicator attachment on the damper would indicate if damper was stuck open. | Loss of redundancy | None (See Remarks) | |
| 43 | 2-CLR-30-186-A<br><br>Penetration Room Cooler Fan 2A-A (Train A) | Provides cooling air to Penetration Room (El 692) | Fails to start, fails while running; Spuriously stops. | Mechanical failure; Train A power failure; Auto-start signal failure; Operator error (handswitch placed in wrong position) | Status monitor light in MCR for 2-FCV-67-346 fully open (2-ZS-67-346). Fan motor running light on MCC. | Loss of cooling to Penetration Room (El 692) with the potential for loss of room equipment. | None.<br>The Train B Cooler is available to start on high temperature (2-TS-30-187A-B) and is 100% redundant to Train A cooler. | The cooler automatically starts upon Train A ABI signal or high temperature at 2-TS-30-186A-A. Cooler fan motor and 2-FSV-67-346-A are interlocked to open 2-FCV-67-346 for ERCW supply on cooler start. Review of the schematics for the coolers A-A and B-B shows their independence. |
| 44 | 2-CLR-30-187-B<br><br>Penetration Room Cooler Fan 2B-B (Train B). | Provides cooling air to Penetration Room (El 692) | Fails to start, fails while running; Spuriously stops. | Mechanical failure; Train B power failure; Auto-start signal failure; Operator error (handswitch placed in wrong position) | Status monitor light in MCR for 2-FCV-67-348 fully open (2-ZS-67-348). Fan motor running light on MCC. | Loss of cooling to Penetration Room (El 692) with the potential for loss of room equipment. | None. The Train A Cooler is available to start on high temperature at 2-TS-30-186A-A and is 100% redundant to Train B cooler. | The cooler automatically starts upon Train B ABI signal or high temperature at 2-TS-30-187A-B. Cooler fan motor and 2-FSV-67-348-B are interlocked to open 2-FCV-67-348 for ERCW supply on cooler start. Review of the schematics for the coolers A-A and B-B shows their independence. |
| 45 | 2-FCV-67-346-A<br><br>Essential Raw Cooling Water Flow Control Valve for the Penetration Room (El. 692) Cooler 2A-A | Provides flowpath for cooling water from the ERCW Header to the Cooler for the Penetration Room Space. | Fails to open, stuck closed. | Mechanical failure; Opening signal failure. | Status monitor light in MCR (2-ZS-67-346) | Loss of redundancy in providing cooling to Penetration Room (El. 692) space.<br>. | None.<br>Train B Pump room cooler is not affected by the failure of Train A pump room cooler, and is 100% redundant to the Train A pump room cooler. | 2-FCV-67-346-A fails open on loss of power or air. |

**Table 9.4-3 FAILURE MODES AND EFFECTS ANALYSIS FOR ACTIVE FAILURES SUBSYSTEM: SAFETY FEATURE EQUIPMENT COOLERS (Sheet 17 of 21)**

| Item No. | Component | Function | Failure Mode | Potential Cause | Method of Detection | Effect on System | Effect on Plant | Remarks |
|---|---|---|---|---|---|---|---|---|
| 46 | 2-FCV-67-348-B<br><br>Essential Raw Cooling Water Flow Control Valve for the Penetration Room (El. 692) Cooler 2B-B | Provides flowpath for cooling water from the ERCW Header to the Cooler for the Penetration Room Space. | Fails to open, stuck closed. | Mechanical failure; Opening signal failure. | Status monitor light in MCR (2-ZS-67-348) | Loss of redundancy in providing cooling to Penetration Room (El. 692) space. | None.<br>Train A Pump room cooler is not affected by the failure of Train B pump room cooler, and is 100% redundant to the Train B pump room cooler. | 2-FCV-67-348-B fails open on loss of power or air. |
| 47 | 2-CLR-30-196<br><br>Penetration Room Cooler Fan 2A-A (Train A). | Provides cooling air to Penetration Room (El 713) | Fails to start, fails while running; Spuriously stops. | Mechanical failure; Train A power failure; Auto-start signal failure; Operator error (handswitch placed in wrong position) | Status monitor light in MCR for 2-FCV-67-350-A fully open (2-ZS-67-350). Fan motor running light on MCC. | Loss of cooling to Penetration Room (El 713) with the potential for loss of room equipment. | None. The Train B Cooler is available to start on high temperature (2-TS-30-197A-B) and is 100% redundant to Train A cooler. | The cooler automatically starts upon Train A ABI signal or high temperature (2-TS-30-196A-A). Cooler fan motor and 2-FSV-67-350-A are interlocked to open 2-FCV-67-350-A for ERCW supply on cooler start. Review of the schematics for the coolers A-A and B-B shows their independence. |
| 48 | 2-CLR-30-197<br><br>Penetration Room Cooler Fan 2B-B (Train B). | Provides cooling air to Penetration Room (el 713) | Fails to start, fails while running; Spuriously stops. | Mechanical failure; Train B power failure; Auto-start signal failure; Operator error (handswitch placed in wrong position) | Status monitor light in MCR for 2-FCV-67-352 fully open (2-ZS-67-352). Fan motor running light on MCC. | Loss of cooling to Penetration Room (El 713) with the potential for loss of room equipment. | None. The Train A Cooler is available to start on high temperature (2-TS-30-196A-A) and is 100% redundant to Train B cooler. | The cooler automatically starts upon Train B ABI signal or high temperature at 2-TS-30-197A-B. Cooler fan motor and 2-FSV-67-352-B are interlocked to open 2-FCV-67-352 for ERCW supply on cooler start. Review of the schematics for the coolers A-A and B-B shows their independence. |

**Table 9.4-3 FAILURE MODES AND EFFECTS ANALYSIS FOR ACTIVE FAILURES SUBSYSTEM: SAFETY FEATURE EQUIPMENT COOLERS (Sheet 18 of 21)**

| Item No. | Component | Function | Failure Mode | Potential Cause | Method of Detection | Effect on System | Effect on Plant | Remarks |
|---|---|---|---|---|---|---|---|---|
| 49 | 2-FCV-67-350<br><br>Essential Raw Cooling Water Flow Control Valve for the Penetration Room (El 713) Cooler 2A-A. | Provides flowpath for cooling water from the ERCW Header to the Cooler for the Penetration Room Space. | Fails to open, stuck closed. | Mechanical failure; Opening signal failure. | Status monitor light in MCR (2-ZS-67-350) | Loss of redundancy in providing cooling to Penetration Room (El 713) Space | None.<br>Train B Penetration Room cooler is not affected by the failure of Train A Penetration Room cooler, and is 100% redundant to the Train A Penetration Room cooler. | 2-FCV-67-350 fails open on loss of power or air. |
| 50 | 2-FCV-67-352<br><br>Essential Raw Cooling Water Flow Control Valve for the Penetration Room (El 713) Cooler 2B-B | Provides flowpath for cooling water from the ERCW Header to the Cooler for the Penetration Room Space. | Fails to open, stuck closed. | Mechanical failure; Opening signal failure. | Status monitor light in MCR (2-ZS-67-352) | Loss of redundancy in providing cooling to Penetration Room (El 713) Space. | None.<br>Train A Penetration Room cooler is not affected by the failure of Train B Penetration Room cooler, and is 100% redundant to the Train B Penetration Room cooler. | 2-FCV-67-352 fails open on loss of power or air. |
| 51 | 1-CLR-30-194-A<br><br>Penetration Room Cooler Fan 1A-A (Train A). | Provides cooling air to Penetration Room (El 737) | Fails to start, fails while running; Spuriously stops. | Mechanical failure; Train A power failure; Auto-start signal failure; Operator error (handswitch placed in wrong position) | Status monitor light in MCR for 1-FCV-67-354-A fully open (1-ZS-67-354). Fan motor running light on MCC. | Loss of cooling to Penetration Room (El 737) with the potential for loss of room equipment. | None. The Train B Cooler is available to start on high temperature (1-TS-30-195A-B) and is 100% redundant to Train A cooler. | The cooler automatically starts upon Train A ABI signal or high temperature at 1-TS-30-194A-A. Cooler fan motor and 1-FSV-67-354-A are interlocked to open 1-FCV-67-354-A for ERCW supply on cooler start. Review of the schematics for the coolers A-A and B-B shows their independence. |

**Table 9.4-3 FAILURE MODES AND EFFECTS ANALYSIS FOR ACTIVE FAILURES SUBSYSTEM: SAFETY FEATURE EQUIPMENT COOLERS (Sheet 19 of 21)**

| Item No. | Component | Function | Failure Mode | Potential Cause | Method of Detection | Effect on System | Effect on Plant | Remarks |
|---|---|---|---|---|---|---|---|---|
| 52 | 1-CLR-30-195-B<br><br>Penetration Room Cooler Fan 1B-B (Train B). | Provides cooling air to Penetration Room (el 737) | Fails to start, fails while running; Spuriously stops. | Mechanical failure; Train B power failure; Auto-start signal failure; Operator error (handswitch placed in wrong position) | Status monitor light in MCR for 1-FCV-67-356-B (1-ZS-67-356). Fan motor running light on MCC. | Loss of cooling to Penetration Room (el 737) with the potential for loss of room equipment. | None. The Train A Cooler is available to start on high temperature (1-TS-30-194A-A) and is 100% redundant to Train B cooler. | The cooler automatically starts upon Train B ABI signal or high temperature at 1-TS-30-195A-B. Cooler fan motor and 1-FSV-67-356-B are interlocked to open 1-FCV-67-356-B for ERCW supply on cooler start. Review of the schematics for the coolers A-A and B-B shows their independence. |
| 53 | 2-FCV-67-354<br><br>Essential Raw Cooling Water Flow Control Valve for the Penetration Room (El 737) Cooler 2A-A. | Provides flowpath for cooling water from the ERCW Header to the Cooler for the Penetration Room Space. | Fails to open, stuck closed. | Mechanical failure; Opening signal failure. | Status monitor light in MCR (2-ZS-67-354) | Loss of redundancy in providing cooling to Penetration Room (El 737) Space | None.<br>Train B Penetration Room cooler is not affected by the failure of Train A Penetration Room cooler, and is 100% redundant to the Train A Penetration Room cooler. | 2-FCV-67-354 fails open on loss of power or air. |
| 54 | 2-FCV-67-356<br><br>Essential Raw Cooling Water Flow Control Valve for the Penetration Room (El 737) Cooler 2B-B | Provides flowpath for cooling water from the ERCW Header to the Cooler for the Penetration Room Space. | Fails to open, stuck closed. | Mechanical failure; Opening signal failure. | Status monitor light in MCR (2-ZS-67-356) | Loss of redundancy in providing cooling to Penetration Room (El 737) Space. | None.<br>Train A Penetration Room cooler is not affected by the failure of Train B Penetration Room cooler, and is 100% redundant to the Train B Penetration Room cooler. | 2-FCV-67-356 fails open on loss of power or air. |

**Table 9.4-3 FAILURE MODES AND EFFECTS ANALYSIS FOR ACTIVE FAILURES SUBSYSTEM: SAFETY FEATURE EQUIPMENT COOLERS (Sheet 20 of 21)**

| Item No. | Component | Function | Failure Mode | Potential Cause | Method of Detection | Effect on System | Effect on Plant | Remarks |
|---|---|---|---|---|---|---|---|---|
| 55 | Backdraft Dampers<br>2-BKD-31-3136<br>2-BKD-31-3137<br>2-BKD-31-3138<br>2-BKD-31-3139<br>2-BKD-31-3140<br>2-BKD-31-3141<br>2-BKD-31-3142<br>2-BKD-31-3143<br>2-BKD-31-3144<br>2-BKD-31-3145<br>2-BKD-31-3204<br>2-BKD-31-3206<br>2-BKD-31-3208<br>2-BKD-31-3209 | Backseat to stop flow of hot air developed due to a HELB in the pipe chase from adjacent rooms and maintains a mild environment in rooms adjacent to pipe chase. | Fails to backseat (Stuck Open) | Mechanical Failure | | See Remark #2 | See Remark #2 | 1. Backdraft dampers 2-BKD-31-1790 and 2-BKD-31-5093 exist so that a backdraft damper is provided in every connection from the pipe chase to an adjacent room, and determined that the single failure of a backdraft damper (to close), when normal HVAC continues to operate, will not result in a severe environment in the room with the failed backdraft damper.<br><br>2. The ABI Signal does not automatically isolate the normal HVAC System during a HELB. As a result, the HELB in the pipe chase will not result in isolation of normal HVAC. Thus, proper air flow is maintained.<br><br>As a result, the single failure of any of the listed backdraft dampers will have no effect on the system or the plant. |
| 56 | 2-CLR-30-194-A<br><br>Penetration Room Cooler Fan 2A-A | Provides cooling air to Penetration Room (El 737) | Fails to start, fails while running; Spuriously stops | Mechanical failure; Train A power failure; Auto-start signal failure; Operator error (handswitch placed in wrong position) | Status monitor light in MCR for 2-FCV-354 fully open (2-ZS-67-354 fully open). Fan motor running light on MCC. | Loss of cooling to Penetration Room (El 737) with the potential for loss of room equipment | None. The Train B Cooler is 100% redundant to train A cooler. | The cooler automatically starts upon Train A ABI signal or high temperature at 2-TS-30-194A-A. Cooler fan motor and 2-FSV-67-354-A are interlocked to open 2-FCV-67-354 for ERCW supply on cooler start. Review of the schematics for the coolers A-A and B-B shows their independence, |

**Table 9.4-3 FAILURE MODES AND EFFECTS ANALYSIS FOR ACTIVE FAILURES SUBSYSTEM: SAFETY FEATURE EQUIPMENT COOLERS (Sheet 21 of 21)**

| Item No. | Component | Function | Failure Mode | Potential Cause | Method of Detection | Effect on System | Effect on Plant | Remarks |
|---|---|---|---|---|---|---|---|---|
| 57 | 2-CLR-30-195-B<br><br>Penetration Room Cooler Fan 2B-B | Provides cooling air to Penetration Room (El 737) | Fails to start, fails while running; Spuriously stops | Mechanical failure; Train B power failure; Auto-start signal failure; Operator error (handswitch placed in wrong position) | Status monitor light in MCR for 2-FCV-356 fully open (2-ZS-67-356 fully open). Fan motor running light on MCC. | Loss of cooling to Penetration Room (El 737) with the potential for loss of room equipment | None. The Train A Cooler is 100% redundant to train B cooler. | The cooler automatically starts upon Train B ABI signal or high temperature at 2-TS-30-195A-B. Cooler fan motor and 2-FSV-67-356-B are interlocked to open 2-FCV-67-356 for ERCW supply on cooler start. Review of the schematics for the coolers A-A and B-B shows their independence, |
| 58 | 2-FCV-67-354<br><br>Essential Raw Cooling Water Flow Control valve for the Penetration Room (El 737) Cooler 2A-A. | Provides flowpath for cooling water from the ERCW Header to the Cooler for the Penetration Room Space. | Fails to open, stuck closed. | Mechanical failure; Open signal failure. | Status monitor light in MCR (2-ZS-67-354) | Loss of redundancy in providing cooling to Penetration Room (El 737) Space | None. Train B Penetration Room cooler is not affected by the failure of Train A Penetration Room cooler, and is 100% redundant to the Train A Penetration room Cooler. | 2-FCV-67-354 fails open on loss of power or air. |
| 59 | 2-FCV-67-356-B<br><br>Essential Raw Cooling Water Flow Control valve for the Penetration Room (El 737) Cooler 2B-B. | Provides flowpath for cooling water from the ERCW Header to the Cooler for the Penetration Room Space. | Fails to open, stuck closed. | Mechanical failure; Open signal failure. | Status monitor light in MCR (2-ZS-67-356) | Loss of redundancy in providing cooling to Penetration Room (El 737) Space | None. Train A Penetration Room cooler is not affected by the failure of Train B Penetration Room cooler, and is 100% redundant to the Train B Penetration Room cooler. | 2-FCV-67-356 fails open on loss of power or air. |

**Table 9.4-3A FAILURE MODES AND EFFECTS ANALYSIS FOR ACTIVE FAILURES SUBSYSTEM: TURBINE DRIVEN AUXILIARY FEEDWATER PUMP ROOM VENTILATION (Sheet 1 of 2)**

| Item No. | Component | Function | Failure Mode | Potential Cause | Method of Detection | Effect on System | Effect on Plant | Remarks |
|---|---|---|---|---|---|---|---|---|
| 1 | 2-FAN-30-214<br><br>Turbine-driven Auxiliary Feedwater Pump Room Ventilation Fan 125V Dc | Provides cooling to the TDAFW Pump Room | Fails to start; Fails while running; Spuriously stopped. | Mechanical failure; Temperature sensing failure; TDAFW Pump start signal failure. | No direct method of detection.<br><br>See Remark # 2 | Loss of cooling air/ventilation to the TDAFW Pump Room from the safety-related dc fan.<br><br>Loss of all cooling/ventilation to the TDAFW Pump Room during loss of all ac (LOAC). | None (See Remarks # 3 and 4) | 1. The dc fan is intended to mitigate the effects of station blackout on the TDAFW Pump Room ventilation. During DBEs the TDAFW provides backup to the two 50% motor-driven AFW pumps. As such its operation during DBEs would imply a single failure to have already occurred; therefore, postulation of the failure of this fan is not required.<br><br>2. Local temperature indication.<br><br>3. In the event of loss of all ac the TDAFW Pump cooling is entirely dependent on the dc fan. A single active failure is not postulated during a Station Blackout event; therefore, the fan and associated components are assumed to function properly during a loss of all ac power.<br><br>4. The dc fan starts automatically by either TDAFW pump start, or high temperature sensed by 1-TS-30-214. It can also be started manually. |

**Table 9.4-3A FAILURE MODES AND EFFECTS ANALYSIS FOR ACTIVE FAILURES SUBSYSTEM: TURBINE DRIVEN AUXILIARY FEEDWATER PUMP ROOM VENTILATION (Sheet 2 of 2)**

| Item No. | Component | Function | Failure Mode | Potential Cause | Method of Detection | Effect on System | Effect on Plant | Remarks |
|---|---|---|---|---|---|---|---|---|
| 2 | 2-BKD-30-3035<br><br>Backdraft Damper | Provides suction air flow path to the operating dc exhaust fan | Spuriously closed | Mechanical failure | No direct method of detection<br><br>See Remarks | Loss of cooling /ventilating for TDAFW Pump Room from dc fan. | See Remarks | During the loss of all ac, there will be no cooling/ventilating capability for TDAFW Pump room, with the possibility for loss of the TDAFW Pump. A non-safety, non-seismic, non- 1E ac fan is present in the room. TDAFW is the backup for the motor-driven FW and is required to operate upon failure of motor-driven FW. Thus, postulation of this failure is not required. A single active failure is not postulated during a Station Blackout event; therefore, the fan and associated components are assumed to function properly during a loss of all ac power |

THIS PAGE INTENTIONALLY BLANK

**Table 9.4-4 FAILURE MODES AND EFFECTS ANALYSIS DIESEL GENERATOR VENTILATION SYSTEM (Sheet 1 of 16)**

| # | COMPONENT IDENTIFICATION | FUNCTION | FAILURE MODE | POTENTIAL CAUSE | METHOD OF FAILURE DETECTION | EFFECT ON SYSTEM | EFFECT ON PLANT | REMARKS |
|---|---|---|---|---|---|---|---|---|
| 1 | Fire damper in Air Intake Room<br><br>0-30-603 for Train 1A-A,<br><br>0-30-604 for Train 2A-A,<br><br>0-30-605 for Train 1B-B, and<br><br>0-30-606 for Train 2B-B | Fire Barrier between Air Intake Room and Diesel Gen Room | Open during fire | Mechanical failure | See Remarks | See Remarks | See Remarks | Single failures of HVAC System need not to be postulated as being concurrent with fire. |
| | | | Closed during other modes of operation | Mechanical (fusible link) failure | Diesel Gen. Room exhaust fan low flow alarm in Main Control Room from fans air flow switches FS-30-447 or FS-30-451 for Train 1A-A, FS-30-449 or FS-30-453 for Train 1B-B, FS-30-448 or FS-30-452 for Train 2A-A, and FS-30-450 or FS-30-454 for Train 2B-B | None (See Remarks) | None (See Remarks) | Redundant train diesel generator system is started by operator |

## Table 9.4-4 FAILURE MODES AND EFFECTS ANALYSIS DIESEL GENERATOR VENTILATION SYSTEM (Sheet 2 of 16)

| # | COMPONENT IDENTIFICATION | FUNCTION | FAILURE MODE | POTENTIAL CAUSE | METHOD OF FAILURE DETECTION | EFFECT ON SYSTEM | EFFECT ON PLANT | REMARKS |
|---|---|---|---|---|---|---|---|---|
| 2 | Motor-operated intake dampers to Diesel Gen. Room<br><br>1-FCO-30-443 for Train 1A-A,<br><br>1-FCO-30-445 for Train 1B-B,<br><br>2-FCO-30-444 for Train 2A-A,<br><br>2-FCO-30-446 for Train 2B-B | To prevent air flow when associated diesel generator exhaust fans are deenergized | Closed or partially closed during associated exhaust fan(s) operation | Mechanical failure or Actuator failure | Diesel Gen. Room exh. fan low flow alarm in Main Control Room from air flow switches FS-30-447 or FS-30-451 for Train 1A-A, FS-30-449 or FS-30-453 for Train 1B-B, FS-30-448, 452 for 2A-A, and FS-30-450, 454 for 2B-B. | Complete or partial loss of ventilation of associated safety train Diesel Gen Room. | None (See Remarks) | Redundant train diesel generator system is started by operator. If closed due to spurious $CO_2$ system actuation operator can verify and reopen damper. |
| 2 | (Continued) | (Cont'd) | Spurious $CO_2$ system actuation | Dampers are spring-loaded to open upon power loss; however, $CO_2$ actuation signal can close them. | Diesel Gen. Room exh. fan low flow alarm in Main Control Room from air flow switches FS-30-447 or FS-30-451 for Train 1A-A,<br>FS-30-449 or FS-30-453 for Train 1B-B,<br>FS-30-448, 452 for 2A-A, and FS-30-450 or 454 for 2B-B. | Partial loss of ventilation of associated safety train Diesel Gen Room. | None (See Remarks) | If closed due to spurious $CO_2$ system actuation, operator can verify and start the fan(s), which in turn reopen dampers, by use of the $CO_2$ bypass switches 1-HS-30-447D, 1-HS-30-449D, 2-HS-30-448D, and 2-HS-30-450D. |

**Table 9.4-4 FAILURE MODES AND EFFECTS ANALYSIS DIESEL GENERATOR VENTILATION SYSTEM (Sheet 3 of 16)**

| # | COMPONENT IDENTIFICATION | FUNCTION | FAILURE MODE | POTENTIAL CAUSE | METHOD OF FAILURE DETECTION | EFFECT ON SYSTEM | EFFECT ON PLANT | REMARKS |
|---|---|---|---|---|---|---|---|---|
| 2 | (Continued) | To open and allow air flow during tornado watch / warning conditions for pressure equalization | Fails to open, or opens initially and then closes during tornado watch or warning | Mechanical Failure<br><br>If the DG room exhaust fan low temperature switches have cooled down below their setpoint value, they will prevent manual start of the fans and opening of the subject dampers until the reset setpoint is reached. | DG Room exh. fan low flow alarm in Main Control Room resulting from air flow switches FS-30-447 or FS-30-451 for Train 1A-A,<br>FS-30-449 or FS-30-453 for Train 1B-B,<br>FS-30-448, 452 for 2A-A, and FS-30-450 or 454 for train 2B-B. | Tornado induced differential pressure across damper in closed position could damage damper and result in partial or complete loss of ventilation to DG room | None (See Remarks) | Redundant DG system is available if a mechanical failure is the result of damper failure.<br><br>When a tornado watch or warning is declared by the National Weather Service for this area, the motor operated intake dampers can be opened by starting the DG room exhaust fans. To assure that the DG room exhaust fans will start and continue to run during conditions when the DG exhaust fan low temperature cut-out switches would normally prevent operation, tornado bypass switches have been added to the control system for each exhaust fan. These switches are placed in the bypass position during the tornado watch / warning and then returned to their NORMAL position once the tornado watch / warning has been cancelled. |

**Table 9.4-4 FAILURE MODES AND EFFECTS ANALYSIS DIESEL GENERATOR VENTILATION SYSTEM (Sheet 4 of 16)**

| # | COMPONENT IDENTIFICATION | FUNCTION | FAILURE MODE | POTENTIAL CAUSE | METHOD OF FAILURE DETECTION | EFFECT ON SYSTEM | EFFECT ON PLANT | REMARKS |
|---|---|---|---|---|---|---|---|---|
| 2 | (Continued) | | | | | | | With the tornado bypass switches placed in the bypass position, the dampers can be opened by starting the DG room exhaust fans using handswitches mounted on the MCCS or locally in the exhaust fan rooms. |

**Table 9.4-4 FAILURE MODES AND EFFECTS ANALYSIS DIESEL GENERATOR VENTILATION SYSTEM (Sheet 5 of 16)**

| # | COMPONENT IDENTIFICATION | FUNCTION | FAILURE MODE | POTENTIAL CAUSE | METHOD OF FAILURE DETECTION | EFFECT ON SYSTEM | EFFECT ON PLANT | REMARKS |
|---|---|---|---|---|---|---|---|---|
| 3 | Fire damper between Diesel Generator Room & Air Exhaust Room | Fire Barrier between Diesel Gen Room and Air Exhaust Room | Open during fire | Mechanical failure | See Remarks | See Remarks | See Remarks | Single failures of HVAC System need not be postulated as being concurrent with fire. |
| | 0-30-607 for Train 1A-A,<br><br>0-30-609 for Train 1B-B,<br><br>0-30-608 for Train 2A-A,<br><br>0-30-610 for Train 2B-B | | Closed during other modes of operation | Mechanical (fusible link) failure | Diesel Gen Room exh fan low flow alarm in Main Control Room from fan air flow switches FS-30-447 or FS-30-451 for Train 1A-A, FS-30-449 or FS-30-453 for Train 1B-B, FS-30-448 or FS-30-452 for Train 2A-A, and FS-30-450 or FS-30-454 for Train 2B-B | Partial loss of ventilation of associated safety train Diesel Gen Room. | None (See Remarks) | Redundant train diesel generator system is started by operator |

## Table 9.4-4 FAILURE MODES AND EFFECTS ANALYSIS DIESEL GENERATOR VENTILATION SYSTEM (Sheet 6 of 16)

| # | COMPONENT IDENTIFICATION | FUNCTION | FAILURE MODE | POTENTIAL CAUSE | METHOD OF FAILURE DETECTION | EFFECT ON SYSTEM | EFFECT ON PLANT | REMARKS |
|---|---|---|---|---|---|---|---|---|
| 4 | Diesel Generator Room exhaust fans<br><br>1-FAN-30-447 1-FAN-30-451 for Train 1A-A,<br><br>1-FAN-30-449 1-FAN-30-453 for Train 1B-B,<br><br>2-FAN-30-448 2-FAN-30-452 for Train 2A-A, and<br><br>2-FAN-30-450, 2-FAN-30-454 for Train 2B-B | Provide ventilation air | Fails to start<br><br>Stops running<br><br>Stops on spurious $CO_2$ actuation* | Electrical or Mechanical<br><br>Electrical or Mechanical<br><br>System logic | Diesel Gen Room exh fan low flow alarm in Main Control Room (Refer to Figure 9.4-25) from air flow switches FS-30-447 or FS-30-451 for Train 1A-A, FS-30-449 or FS-30-453 for Train 1B-B, FS-30-448 or FS-30-452 for Train 2A-A, and FS-30-450 or FS-30-454 for Train 2B-B | Partial loss of adequate ventilation for maintenance of design temperature | None | Redundant train diesel generator system is started by operator.<br><br>*Operator can verify if not result of fire, reopen fire dampers and start exhaust fans from handswitches |
| | | | Fails to stop on low temp | Electrical | Surveillance | Drop in DG Room temp | None (See Remarks) | Redundant train diesel generator system is available. |

## Table 9.4-4 FAILURE MODES AND EFFECTS ANALYSIS DIESEL GENERATOR VENTILATION SYSTEM (Sheet 7 of 16)

| # | COMPONENT IDENTIFICATION | FUNCTION | FAILURE MODE | POTENTIAL CAUSE | METHOD OF FAILURE DETECTION | EFFECT ON SYSTEM | EFFECT ON PLANT | REMARKS |
|---|---|---|---|---|---|---|---|---|
| 5 | Motor-operated discharge dampers of diesel generator room exhaust fans<br><br>Train 1A-A<br>1-FCO-30-447 for Fan 1, and<br>1-FCO-30-451 for Fan 2<br><br>Train 1BB<br>1-FCO-30-449 for Fan 1, and<br>1-FCO-30-453 for Fan 2<br><br>Train 2A-A,<br>2-FCO-30-448 for Fan 1,<br>2-FCO-30-452 for Fan 2<br><br>Train 2B-B<br>2-FCO-30-450 for Fan 1 ,<br>2-FCO-30-454 for Fan 2 | To prevent air flow when associated diesel generator exhaust fan is deenergized | Closed during associated exhaust fan operation (see note in remarks) | Mechanical<br><br>Loss of power (dampers fail as-is) | Diesel Gen Room exh fan low flow alarm in Main Control Room from air flow switches FS-30-447 or FS-30-451 for Train 1A-A, FS-30-449, or FS-30-453 for Train 1B-B, FS-30-448 or FS-30-452; for Train 2A-A, and FS-30-450, FS-30-454 for Train 2B-B | Loss of 50% ventilation flow required to maintain the environmental qualification temperatues in the DG room. | None (See Remarks) | Redundant train diesel generator system is started by operator |

**Table 9.4-4 FAILURE MODES AND EFFECTS ANALYSIS DIESEL GENERATOR VENTILATION SYSTEM (Sheet 8 of 16)**

| # | COMPONENT IDENTIFICATION | FUNCTION | FAILURE MODE | POTENTIAL CAUSE | METHOD OF FAILURE DETECTION | EFFECT ON SYSTEM | EFFECT ON PLANT | REMARKS |
|---|---|---|---|---|---|---|---|---|
| 5 | (Continued) | To open and allow air flow during tornado watch / warning conditions for pressure equalization | Fails to open, or opens initially and then closes during tornado watch or warning | Mechanical Failure<br><br>If the DG room exhaust fan low temperature switches have cooled down below their setpoint value, they will prevent manual start of the fans and opening of the subject dampers until the reset setpoint is reached. | Diesel Gen. Room exh. fan low flow alarm in Main Control Room from air flow switches FS-30-447 or FS-30-451 for Train 1A-A,<br>FS-30-449 or FS-30-453 for Train 1B-B,<br>FS-30-448 or 452 for 2A-A, and FS-30-450 or 454 for 2B-B. | Tornado induced differential pressure across damper in closed position could damage damper and result in partial or complete loss of ventilation to DG room | None (See Remarks) | Redundant DG system is available if a mechanical failure is the result of damper failure. When a tornado watch or warning is declared by the National Weather Service for this area, the motor operated intake dampers can be opened by starting the DG room exhaust fans. To assure that the DG room exhaust fans will start and continue to run during conditions when the DG exhaust fan low temperature cut-out switches would normally prevent operation, tornado bypass switches have been added to the control system for each exhaust fan. These switches are placed in the bypass position during the tornado watch / warning andf then returned to their NORMAL position once the tornado watch / warning has been cancelled. |

**Table 9.4-4 FAILURE MODES AND EFFECTS ANALYSIS DIESEL GENERATOR VENTILATION SYSTEM (Sheet 9 of 16)**

| # | COMPONENT IDENTIFICATION | FUNCTION | FAILURE MODE | POTENTIAL CAUSE | METHOD OF FAILURE DETECTION | EFFECT ON SYSTEM | EFFECT ON PLANT | REMARKS |
|---|---|---|---|---|---|---|---|---|
| 5 | (Continued) | | | | | | | With the tornado bypass switches placed in the bypass position, the dampers can be opened by starting the DG room exhaust fans using handswitches mounted on the MCCs or locally in thexhaust fan rooms. |
| 6 | Fire dampers of Elec. BD Rooms intake vent<br><br>0-30-595<br>0-30-596<br>0-30-597<br>0-30-598 | Fire Barrier between Elec. BD Room & outside | Open during fire<br><br>Closed during other modes of operation | Mechanical failure<br><br>Mechanical failure | See Remarks | See Remarks<br><br>Loss of ventilation of associated Elec. BD Room and rise of space temp. | See Remarks<br><br>None (See Remarks) | Single failures of HVAC System need not be postulated as being concurrent with fire.<br><br>Redundant train diesel generator system is started by operator |

**Table 9.4-4 FAILURE MODES AND EFFECTS ANALYSIS DIESEL GENERATOR VENTILATION SYSTEM (Sheet 10 of 16)**

| # | COMPONENT IDENTIFICATION | FUNCTION | FAILURE MODE | POTENTIAL CAUSE | METHOD OF FAILURE DETECTION | EFFECT ON SYSTEM | EFFECT ON PLANT | REMARKS |
|---|---|---|---|---|---|---|---|---|
| 7 | Fire dampers of Elec. BD Rooms exhaust<br><br>0-30-599<br>0-30-600<br>0-30-601<br>0-30-602 | Fire Barrier between Elec. BD Rooms & Air Exh Rooms | Open during fire<br><br>Closed during other modes of operation | Mechanical failure<br><br>Mechanical failure | See Remarks<br><br>Surveillance & Maintenance | See Remarks<br><br>Loss of ventilation of associated Elec. BD Room and rise of space temp. | See Remarks<br><br>None (See Remarks) | Single failures of HVAC System need not be postulated as being concurrent with fire.<br><br>Redundant train diesel generator system is started by operator |
| 8 | Electric BD Room exhaust fans<br><br>1-FAN-30-459 for Train 1A-A,<br><br>1-FAN-30-461 for Train 1B-B,<br><br>2-FAN-30-460 for Train 2A-A, and<br><br>2-FAN-30-462 for Train 2B-B | Provide ventilation air | Fails to start; stops running, Spurious $CO_2$ system actuation*<br><br>Operates during winter | Electrical, Mechanical<br><br>Operator action not performed per site operating procedure | Surveillance & Maintenance<br><br>Surveillance | Loss of ventilation of associated Elec. BD Room and rise of space temp<br><br>Decrease of space temp. below freezing | None (See Remarks)<br><br>None (See Remarks) | Redundant train diesel generator system is started by operator<br><br>*If failures resulted from spurious actuation of the $CO_2$ system, operator can verify and restart the fans from hand switches.<br><br>Analyses have shown that no adverse effect will occur on safety-related equipment as a result of below freezing temperatures; therefore, operation of the fan is allowed in winter. |

**Table 9.4-4 FAILURE MODES AND EFFECTS ANALYSIS DIESEL GENERATOR VENTILATION SYSTEM (Sheet 11 of 16)**

| # | COMPONENT IDENTIFICATION | FUNCTION | FAILURE MODE | POTENTIAL CAUSE | METHOD OF FAILURE DETECTION | EFFECT ON SYSTEM | EFFECT ON PLANT | REMARKS |
|---|---|---|---|---|---|---|---|---|
| 9 | Motor-operated discharge damper of Elec. BD Room exhaust fans<br><br>1-FCO-30-459 for Train 1A-A,<br><br>1-FCO-30-461 for Train 1B-B,<br><br>2-FCO-30-460 for Train 2A-A, and<br><br>2-FCO-30-462 for Train 2B-B | To prevent air flow when associated Elec. BD Room exhaust fan is deenergiized | Closed during associated exhaust fan operation | Mechanical | Surveillance & Mechanical | Loss of ventilation of associated Elec. BD Room and rise of space temp. | None (See Remarks) | Redundant train diesel generator system is started by operator<br><br>NOTE: These dampers are to be open by handswitches 0-HS-30-459B or 0-HS-30-459C for Train 1A-A, 0-HS-30-461B or 0-HS-30-461C for Train 1B-B, 0-HS-30-460B or 0-HS-30-460C for Train 2A-A and 0-HS-30-462B or 0-HS-30-462C for Train 2B-B when tornado watch or warning is declared by National Weather Service for this area. |

## Table 9.4-4 FAILURE MODES AND EFFECTS ANALYSIS DIESEL GENERATOR VENTILATION SYSTEM (Sheet 12 of 16)

| # | COMPONENT IDENTIFICATION | FUNCTION | FAILURE MODE | POTENTIAL CAUSE | METHOD OF FAILURE DETECTION | EFFECT ON SYSTEM | EFFECT ON PLANT | REMARKS |
|---|---|---|---|---|---|---|---|---|
| 10 | Generator & Electrical Panels ventilation fans<br><br>1-FAN-30-491 for Train 1A-A,<br><br>1-FAN-30-493 for train 1B-B,<br><br>2-FAN-30-492 for Train 2A-A,<br><br>2-FAN-30-494 for Train 2B-B | Provide ventilation for elec. panel & to generator inlet | Fails to start; stops running | Electrical Mechanical | Low air flow alarm in Main Control Room via air flow switches FS-30-491 for Train 1A-A, FS-30-493 for Train 1B-B, FS-30-492 for Train 2A-A, and FS-30-494 for Train 2B-B | Loss of ventilation air supply to associated elec. panel and generator inlet | None (See Remarks) | Redundant train diesel generator system is started by operator |
| 11 | Filters for elec panel ventilation air supply<br><br>1-FLT-30-491 for Train 1A-A,<br><br>1-FLT-30-493 for Train 1B-B,<br><br>2-FLT-30-492 for Train 2A-A,<br><br>2-FLT-30-494 for Train 2B-B | Filter the ventilation air supplied to elec panel | Clogged | Accumulation of dirt | Surveillance & Maintenance | Rise of temp in the elec panel due to reduced supply of vent air | None (See Remarks) | Redundant train diesel generator system is started by operator |

**Table 9.4-4 FAILURE MODES AND EFFECTS ANALYSIS DIESEL GENERATOR VENTILATION SYSTEM (Sheet 13 of 16)**

| # | COMPONENT IDENTIFICATION | FUNCTION | FAILURE MODE | POTENTIAL CAUSE | METHOD OF FAILURE DETECTION | EFFECT ON SYSTEM | EFFECT ON PLANT | REMARKS |
|---|---|---|---|---|---|---|---|---|
| 12 | Class 1E AC power | Provide Class 1E AC power to safety-related portions of the diesel generator building ventilation system | Loss of or inadequate power | Electrical | Indication and alarms in Main Control Room | Loss of power to diesel generator building ventilation system safety-related equipment | None (See Remarks) | Redundant train diesel generator system is available for the plant safe shutdown |
| 13 | Class 1E AC power to instrumentation and control | Provide Class 1E power to safety-related diesel generator building ventilation system controls and instrumentation | Loss of or inadequate power | Electrical | Indication and alarms in main control room | Loss of control of the diesel generator ventilation system safety related equipment | None (See Remarks) | Redundant train diesel generator system is available for the plant safe shutdown. |

**Table 9.4-4 FAILURE MODES AND EFFECTS ANALYSIS DIESEL GENERATOR VENTILATION SYSTEM (Sheet 14 of 16)**

| # | COMPONENT IDENTIFICATION | FUNCTION | FAILURE MODE | POTENTIAL CAUSE | METHOD OF FAILURE DETECTION | EFFECT ON SYSTEM | EFFECT ON PLANT | REMARKS |
|---|---|---|---|---|---|---|---|---|
| 14 | Non-safety heaters<br><br>1-HTR-30-471, 1-HTR-30-472 for Diesel Gen. 1A-A Room;<br><br>1-HTR-30-473, 1-HTR-30-474 for Diesel Gen. 1B-B Room;<br><br>2-HTR-30-475, 2-HTR-30-476 for diesel gen. 2A-A Room; and<br><br>2-HTR-30-477, 2-HTR-30-478 for diesel gen. 2B-B Room | Provide heating during winter normal operation | On during summer LOCA operation | Spurious operation | Surveillance & Maintenance | Increase of Diesel Gen. Room & Air Exh. Room temp. above environmental design conditions | None. (See Remarks) | Redundant train diesel generator system is available for the plant safe shutdown |
| | | | Off during winter conditions | Electrical | Surveillance | Drop in Diesel Gen Room temp | None. (See Remarks) | Same as above |

**Table 9.4-4 FAILURE MODES AND EFFECTS ANALYSIS DIESEL GENERATOR VENTILATION SYSTEM (Sheet 15 of 16)**

| # | COMPONENT IDENTIFICATION | FUNCTION | FAILURE MODE | POTENTIAL CAUSE | METHOD OF FAILURE DETECTION | EFFECT ON SYSTEM | EFFECT ON PLANT | REMARKS |
|---|---|---|---|---|---|---|---|---|
| 15 | Non-safety heaters<br><br>1-HTR-30-487 for 480V BD Room 1-A-A,<br><br>1-HTR-30-489 for 480V BD Room 1B-B,<br><br>2-HTR-30-488 for 480V BD Room 2A-A, and<br><br>2-HTR-30-490 for 2B-B Room | Provide heating during winter normal operation | On during summer LOCA operation<br><br>Off during winter operation | Spurious operation<br><br>Electrical | Surveillance & Maintenance<br><br>Surveillance | Increase 480V BD Room temp. above environmental design conditions<br><br>Drop in 480V board room temp. | None. (See Remarks)<br><br>None. (See Remarks) | Redundant train diesel generator system is available for the plant safe shutdown<br><br>Redundant trains diesel generator system is available for the plant safe shutdown. |
| 16 | Nonsafety heaters<br><br>0-HTR-30-479<br>0-HTR-30-480<br>0-HTR-30-481<br>0-HTR-30-482 for the Pipe Gallery | Provide heating during winter normal operation | Off during winter operation | Electrical | Surveillance & Maintenance | Decrease in Pipe Gallery Room temp below environmental design conditions | None. (See Remarks) | Minimum temperature in pipe gallery is calculated to be 36.3$^{o}$F. |
| 17 | Toilet Room exhaust fan 0-FAN-469 | Provide cooling and ventilation for the toilet and corridor | Fails to start; stops running | Electrical or Mechanical | Surveillance & Maintenance | Loss of adequate ventilation for maintenance of design temp | None. (See Remarks) | Maximum temperature in corridor is calculated to be 120$^{o}$F |

## Table 9.4-4 FAILURE MODES AND EFFECTS ANALYSIS DIESEL GENERATOR VENTILATION SYSTEM (Sheet 16 of 16)

| # | COMPONENT IDENTIFICATION | FUNCTION | FAILURE MODE | POTENTIAL CAUSE | METHOD OF FAILURE DETECTION | EFFECT ON SYSTEM | EFFECT ON PLANT | REMARKS |
|---|---|---|---|---|---|---|---|---|
| 18 | Muffler Rm Exhaust Fan<br><br>1-FAN-30-463<br>1-FAN-30-465<br>1-FAN-30-464<br>1-FAN-30-466 | Removes heat from Muffler Room Area during Diesel Operation | Fails ON during minimum outside design condition and diesel not operating | Electrical operation (Switch in wrong position) | Surveillance | None. (See Remarks) | None,. (See Remarks) | Each fan, located on the roof, is interlocked with its respective diesel. The fan starts when its diesel starts. It can also be started from a hand switch. In the event of a spurious start during minimum outside temperature conditons, and its diesel not operating, an analysis has shown that the fan would not cause any adverse conditions on the diesel operation. |

**Table 9.4-4a Deleted by Amendment 94**

THIS PAGE INTENTIONALLY BLANK

**Table 9.4-5**
**(Sheet 1 of 41)**
**FAILURE MODES AND EFFECTS ANALYSIS FOR ACTIVE FAILURES SUBSYSTEM: AUXILIARY BOARD ROOMS AIR CONDITIONING SYSTEM**

| Item No. | Component | Function | Failure Mode | Potential Cause | Method of Detection | Effect on System | Effect on Plant | Remarks |
|---|---|---|---|---|---|---|---|---|
| 1 | 1-AHU-31-461-A<br><br>Air Handling Unit 1A-A for 480 V Board Room 1A and Battery Room I (Train A) | Provides cooling air supply to 480 V Board Room 1A Battery Room I, and to Train A equipment in Board Room 1B, and Train B press fan, Fifth Vital Battery Rm. (FVBR) | Fails to run; Fails while running | Mechanical failure; Train A power failure; Control signal failure; Temperature control sensing failure at 1-TS-31-441A; low flow control sensing failure at 1-FS-31-460; Operator error (handswitch 1-HS-31-461B in wrong position) Hardware related failures; i.e., motor burns out, fan drive belt failures, loss of refrigerant to the Cooling Coil, and/or restricted air flow path. | Annunciation of 480 V Board Room 1A HVAC System abnormal for 1-FS-31-460 closed on low flow from AHU 1A-A<br><br>Indicating lights in MCR (1-HS-31-461A). Motor running light on MCC.<br><br>No indication in MCR of a low temperature sensing failure other than indication that the AHU is not running. | Loss of capability to provide cooling air to 480 V Board Room 1A and Battery Board Room I and partial loss of cooling to FVBR. | None; See Remarks | 1. Failures of the cooling coil, fan, motor, and filter are enveloped by the failure of the AHU.<br><br>2. The Condenser 1A-A and Compressor 1A-A are interlocked to automatically stop or start with the AHU 1A-A stop or start.<br><br>3. Board Room 1B and Battery Room II provide the redundancy.<br><br>4. Operator actions are defined to deal with loss of train A cooling<br><br>5. Battery Room 1 and FVBR can be exhausted from the pressurizing fan supply air to provide hydrogen ventilation. Prepared calculations indicate that sufficient cooling is still available to assure the battery rooms remain below the maximum temperature limits. |

**Table 9.4-5**
**(Sheet 2 of 41)**
**FAILURE MODES AND EFFECTS ANALYSIS FOR ACTIVE FAILURES SUBSYSTEM: AUXILIARY BOARD ROOMS AIR CONDITIONING SYSTEM**

| Item No. | Component | Function | Failure Mode | Potential Cause | Method of Detection | Effect on System | Effect on Plant | Remarks |
|---|---|---|---|---|---|---|---|---|
| 2 | 1-AHU-31-475-B<br><br>Air Handling Unit 1B-B for 480 V Board Room 1B and Battery Room II (Train B) | Provides cooling air supply to 480 V Board Room 1B Battery Room II | Fails to run; Fails while running | Mechanical failure; Train B power failure; Control signal failure; Temperature control sensing failure at 1-TS-31-447A; low flow control sensing failure at 1-FS-31-476; Operator error (handswitch 1-HS-31-475B in wrong position) | Annunciation of 480 V Board Room 1B HVAC System abnormal for 1-FS-31-476 closed on low flow from AHU 1B-B<br><br>Indicating lights in MCR (1-HS-31-475-A). Motor running light on MCC.<br><br>No indication in MCR of a low temperature sensing failure other than indication that the AHU is not running. | Loss of capability to provide cooling air to 480 V Board Room 1B and Battery Board Room II<br><br>Battery Room II will continue to be ventilated. The pressurizing fan will supply air to the battery room through the AHU duct.<br><br>Loss of Train A equipment located in these rooms. | None; See Remarks | 1. Failures of the cooling coil, fan, motor, and filter are enveloped by the failure of the AHU.<br><br>2. The Condenser 1B-B and Compressor 1B-B are interlocked to automatically stop or start with the AHU 1B-B stop or start.<br><br>3. A review of the schemiatics establishes the separation of the AC system: for the 480V Board Room 1A with Battery Room I and its redundant 480V Board Room II.<br><br>4. Train A provides cooling to the Train A components in the 480V Board Room 1B.<br><br>5. Operator actions are defined to deal with a loss of Training B cooling |

**Table 9.4-5**
**(Sheet 3 of 41)**
**FAILURE MODES AND EFFECTS ANALYSIS FOR ACTIVE FAILURES SUBSYSTEM: AUXILIARY BOARD ROOMS AIR CONDITIONING SYSTEM**

| Item No. | Component | Function | Failure Mode | Potential Cause | Method of Detection | Effect on System | Effect on Plant | Remarks |
|---|---|---|---|---|---|---|---|---|
| 3 | 2-AHU-31-461-A<br><br>Air Handling Unit 2A-A for 480 V Board Room 2A and Battery Room III<br>(Train A) | Provides cooling air supply to 480 V Board Room 2A Battery Room III, and to Train A equipment in Board Room 2B, and Train B press fan | Fails to run; Fails while running | Mechanical failure; Train A power failure; Control signal failure; Temperature control sensing failure at 2-TS-31-441A; low flow control sensing failure at 2-FS-31-460; Operator error (handswitch 2-HS-31-461B in wrong position) | Annunciation of 480 V Board Room 2A HVAC System abnormal for 2-FS-31-460 closed on low flow from AHU 2A-A<br><br>Indicating lights in MCR (2-HS-31-461-A). Motor running light on MCC.<br><br>No indication in MCR of a low temperature sensing failure other than indication that the AHU is not running. | Loss of capability to provide cooling air to 480 V Board Room 2A and Battery Board Room III.<br><br>Battery Room III will continue to be ventilated. The pressurizing fan will supply air to the battery room through the AHU duct.<br><br>Loss of Train A equipment located in these rooms. | None; See Remarks | 1. Failures of the cooling coil, fan, motor, and filter are enveloped by the failure of the AHU.<br><br>2. The Condenser 2A-A and Compressor 2A-A are interlocked to automatically stop or start with the AHU 2A-A stop or start.<br><br>3. Board Room 2B and Battery Room IV provide the redundancy.<br><br>4. Operator actions are identified to deal with a loss of Train A cooling.<br><br>5. Battery Rm I can be exhausted from the pressurizing fan supply air to provide hydrogen ventilation. Calculations indicate that sufficient cooling is still available to assure the battery rooms remain below the maximum temperature limit. |

**Table 9.4-5**
**(Sheet 4 of 41)**
**FAILURE MODES AND EFFECTS ANALYSIS FOR ACTIVE FAILURES SUBSYSTEM: AUXILIARY BOARD ROOMS AIR CONDITIONING SYSTEM**

| Item No. | Component | Function | Failure Mode | Potential Cause | Method of Detection | Effect on System | Effect on Plant | Remarks |
|---|---|---|---|---|---|---|---|---|
| 4 | 2-AHU-31-475-B<br><br>Air Handling Unit 2B-B for 480 V Board Room 2B and Battery Room IV (Train B) | Provides cooling air supply to 480 V Board Room 2B Battery Room IV | Fails to run; Fails while running | Mechanical failure; Train B power failure; Control signal failure; Temperature control sensing failure at 2-TS-31-447A; low flow control sensing failure at 2-FS-31-476; Operator error (handswitch 2-HS-31-475B in wrong position) | Annunciation of 480 V Board Room 2B HVAC System abnormal for 2-FS-31-476 closed on low flow from AHU 2B-B<br><br>Indicating lights in MCR (2-HS-31-475A). Motor running light on MCC.<br><br>No indication in MCR of a low temperature sensing failure other than indication that the AHU is not running. | Loss of capability to provide cooling air to 480 V Board Room 2B and Battery Board Room IV<br><br>Battery Room IV will continue to be ventilated. The pressurizing fan will supply air to the battery room through the AHU duct.<br><br>Loss of Train A equipment located in these rooms. | None: See Remarks | 1.Failures of the cooling coil, fan, motor, and filter are enveloped by the failure of the AHU.<br><br>2. The Condenser 2B-B and Compressor 2B-B are interlocked to automatically stop or start with the AHU 2B-B stop or start.<br><br>3. Board Room 2A and Battery Room III provide the redundancy.<br><br>4. Train A provides cooling to the Train A components in the 480V Board Room 2B.<br>5. Operator actions are defined to deal with a loss of Train B cooling. |

**Table 9.4-5**
**(Sheet 5 of 41)**
**FAILURE MODES AND EFFECTS ANALYSIS FOR ACTIVE FAILURES SUBSYSTEM: AUXILIARY BOARD ROOMS AIR CONDITIONING SYSTEM**

| Item No. | Component | Function | Failure Mode | Potential Cause | Method of Detection | Effect on System | Effect on Plant | Remarks |
|---|---|---|---|---|---|---|---|---|
| 5 | 1-COND-31-290-A<br><br>Air Cooled Condenser Unit 1A-A | Provides refrigerant to AHU 1A-A | Fails to run; Stops while running | Mechanical failure; Train A power failure; Start signal failure. | Motor running light on MCC | Loss of cooling to 480 V Board Room 1A The Battery Room I will be ventilated by the air supply from the Pressurizing Fan to provide Hydrogen ventilation. | None | 1. Failure of the condenser envelopes failure of its fan, coils and motor.<br><br>2. The condenser is interlocked to automatically start or stop with the AHU and compressor start or stop.<br><br>3. The condenser is interlocked to automatically open 1-FSV-31-290 when running and close it when stopped.<br><br>4. Board Room 1B and Battery Room II provide the redundancy.<br><br>5. Actions are defined that deal with a loss of Train A cooling.<br><br>6. Battery Room I can be exhausted from the pressurizing fan supply air to provide hydrogen ventilation. Calculations indicate that sufficient cooling is still available to assure the battery rooms remain below the maximum temperature limit. |

**Table 9.4-5**
**(Sheet 6 of 41)**
**FAILURE MODES AND EFFECTS ANALYSIS FOR ACTIVE FAILURES SUBSYSTEM: AUXILIARY BOARD ROOMS AIR CONDITIONING SYSTEM**

| Item No. | Component | Function | Failure Mode | Potential Cause | Method of Detection | Effect on System | Effect on Plant | Remarks |
|---|---|---|---|---|---|---|---|---|
| 6 | 1-COND-31-289-B<br><br>Air Cooled Condenser Unit 1B-B | Provides refrigerant to AHU 1B-B | Fails to run; Stops while running | Mechanical failure; Train B power failure; Start signal failure. | Motor running light on MCC | Loss of cooling to 480 V Board Room 1B The Battery Room II will be ventilated by the air supply from the Pressurizing Fan to provide Hydrogen ventilation. | None (See Remarks) | 1. Failure of the condenser envelopes failure of its fan, coils and motor.<br><br>2. The condenser is interlocked to automatically start or stop with the AHU and compressor start or stop.<br><br>3. The condenser is interlocked to automatically open 1-FSV-31-289 when running and close it when stopped.<br><br>4. Board Room 1A and Battery Room I provide the redundancy.<br><br>5. The Train A equipment located in the Board Room 1B is cooled by Train A. |

**Table 9.4-5**
**(Sheet 7 of 41)**
**FAILURE MODES AND EFFECTS ANALYSIS FOR ACTIVE FAILURES SUBSYSTEM: AUXILIARY BOARD ROOMS AIR CONDITIONING SYSTEM**

| Item No. | Component | Function | Failure Mode | Potential Cause | Method of Detection | Effect on System | Effect on Plant | Remarks |
|---|---|---|---|---|---|---|---|---|
| 7 | 2-COND-31-290-A<br><br>Air Cooled Condenser Unit 2A-A | Provides refrigerant to AHU 2A-A | Fails to run; Stops while running | Mechanical failure; Train B power failure; Start signal failure. | Motor running light on MCC | Loss of cooling to 480 V Board Room 2A The Battery Room III will be ventilated by the air supply from the Pressurizing Fan to provide Hydrogen ventilation. | None (See Remarks) | 1. Failure of the condenser envelopes failure of its fan, coils and motor.<br><br>2. The condenser is interlocked to automatically start or stop with the AHU and compressor start or stop.<br><br>3. The condenser is interlocked to automatically open 2-FSV-31-290 when running and close it when stopped.<br><br>4. Board Room 2B and Battery Room IV provide the redundancy. |

**Table 9.4-5**
**(Sheet 8 of 41)**
**FAILURE MODES AND EFFECTS ANALYSIS FOR ACTIVE FAILURES SUBSYSTEM: AUXILIARY BOARD ROOMS AIR CONDITIONING SYSTEM**

| Item No. | Component | Function | Failure Mode | Potential Cause | Method of Detection | Effect on System | Effect on Plant | Remarks |
|---|---|---|---|---|---|---|---|---|
| 8 | 2-COND-31-289-B<br><br>Air Cooled Condenser Unit 2B-B | Provides refrigerant to AHU 2B-B | Fails to run; Stops while running | Mechanical failure; Train A power failure; Start signal failure. | Motor running light on MCC | Loss of cooling to 480 V Board Room 2B The Battery Room IV will be ventilated by the air supply from the Pressurizing Fan to provide Hydrogen ventilation. | None (See Remarks) | 1. Failure of the condenser envelopes failure of its fan, coils and motor.<br><br>2. The Condenser is interlocked to automatically start or stop with the AHU and compressor start or stop.<br><br>3. The condenser is interlocked to automatically open 2-FSV-31-289 when running and close it when stopped.<br><br>4. Board Room 2A and Battery Room III provide the redundancy.<br><br>5. The Train A equipment located in the Board Room 2B will be cooled by Train A. |

**Table 9.4-5**
**(Sheet 9 of 41)**
**FAILURE MODES AND EFFECTS ANALYSIS FOR ACTIVE FAILURES SUBSYSTEM: AUXILIARY BOARD ROOMS AIR CONDITIONING SYSTEM**

| Item No. | Component | Function | Failure Mode | Potential Cause | Method of Detection | Effect on System | Effect on Plant | Remarks |
|---|---|---|---|---|---|---|---|---|
| 9 | 1-FCO-31-290<br><br>Exhaust Damper for ACU 1A-A | Provides exhaust flow path for Condensing Unit 1A-A | Fails to open (stuck closed) | Mechanical failure | Indicating lights in MCR (1-ZS-31-290) | Loss of ability to exhaust from condensing Unit 1A-A | None (See Remarks) | 1. Interlocked with Condensing Unit 1A-A via 1-FSV-31-290 to automatically open on ACU start.<br><br>2. A review of the Control Air flow diagrams shows that nonsafety control air is supplied to both 1-FC0-31-290 and 289.<br><br>3. The exhaust damper is air operated and fails open upon loss of air or Train A power.<br><br>4. Board Room 1B and Battery Room II provide the redundancy. |

**Table 9.4-5**
**(Sheet 10 of 41)**
**FAILURE MODES AND EFFECTS ANALYSIS FOR ACTIVE FAILURES SUBSYSTEM: AUXILIARY BOARD ROOMS AIR CONDITIONING SYSTEM**

| Item No. | Component | Function | Failure Mode | Potential Cause | Method of Detection | Effect on System | Effect on Plant | Remarks |
|---|---|---|---|---|---|---|---|---|
| 10 | 2-FCO-31-290<br><br>Exhaust Damper for AHU 2A-A | Provides exhaust flow path for Condensing Unit 2A-A | Fails to open (stuck closed) | Mechanical failure | Indicating lights in MCR (2-ZS-31-290) | Loss of ability to exhaust from condensing Unit 2A-A | None (See Remarks) | 1. Interlocked with Condensing Unit 2A-A via 2-FSV-31-290 to automatically open on ACU start.<br><br>2. A review of the Control Air flow diagrams shows that nonsafety control air is supplied to both 2-FC0-31-290 and 289.<br><br>3. The exhaust damper is air operated and fails open upon loss of air or Train A power.<br><br>4. Board Room 2B and Battery Room IV provide the redundancy. |

**Table 9.4-5**
**(Sheet 11 of 41)**
**FAILURE MODES AND EFFECTS ANALYSIS FOR ACTIVE FAILURES SUBSYSTEM: AUXILIARY BOARD ROOMS AIR CONDITIONING SYSTEM**

| Item No. | Component | Function | Failure Mode | Potential Cause | Method of Detection | Effect on System | Effect on Plant | Remarks |
|---|---|---|---|---|---|---|---|---|
| 11 | 1-FAN-31-462-A<br><br>Pressurizing Supply Fan 1A1-A (Train A) | Provides pressurizing air flow to 480 V Board Room 1A Battery Room I and partial makeup air to the Fifth Vital Battery Room. | Fails to start; Fails while running | Mechanical failure; Train A power failure; Control signal failure; Operator error (handswitch in wrong position) | Indicating lights in MCR (1-HS-31-462 A). Locally, 1-HS-31-462B. ANN 19-9 low flow from Press. Fans | Loss of redundancy in pressurizing air supply to 480 V Board Room 1A and Battery Room I and V<br><br>Low flow on 1-FS-31-463-B will automatically stop Fan 1A1-A and Battery Board Room Exhaust fan 1A1-A and, will automatically start Fan 1A2-B and Battery Room Exhaust fan 1A2-B.<br><br>(See Remark #2.) | None (See 'Remarks') | 1. Fan is controlled by locally mounted stop-start push button stations in conjunction with auto-start switches in MCR.<br><br>2. Pressurizing Fan 1A1-A is interlocked with Battery Board Room I Exhaust Fan 1A2-B and 480 V Room 1A Fan 1A2-B such that when Fan 1A1-A is in auto-standby, low flow on either of the 1A2-B Fans will start 1-FAN-31-462-A and stop 1-FAN-31-463-B.<br><br>3. A review of the schematics establishes the separation and redundancy of the train A and B fans. The loss of nondivisional train associated power supply for the separation relay will not prevent the switchover from a failed pressurizing fan to the standby fan. |
| | | | Failure to stop when Train B fan starts. | Spurious low flow signal; Hot short in control wiring; Operator error. | Indicating lights in MCR (1-HS-31-462A). | Overpressurization of 480 V Board Room 1A.<br><br>(See 'Remarks') | None (See 'Remarks') | Insignificant increase in air flow to 480 V Board Room 1A and Mechanical Equipment Room 1A. Battery room I will not be overpressurized without second failure. |

**Table 9.4-5**
**(Sheet 12 of 41)**
**FAILURE MODES AND EFFECTS ANALYSIS FOR ACTIVE FAILURES SUBSYSTEM: AUXILIARY BOARD ROOMS AIR CONDITIONING SYSTEM**

| Item No. | Component | Function | Failure Mode | Potential Cause | Method of Detection | Effect on System | Effect on Plant | Remarks |
|---|---|---|---|---|---|---|---|---|
| 12 | 1-FAN-31-463-B<br><br>Pressurizing Supply Fan 1A2-B (Train B) | Provides pressurizing air flow to 480 V Board Room 1A Battery Room I and partial makeup air to the FVBR | Fails to start; Fails while running | Mechanical failure; Train B power failure; Control signal failure; Operator error (handswitch in wrong position) | Indicating lights in MCR (1-HS-31-463 A). Locally, 1-HS-31-463B. ANN 19-9 low flow from Press. Fans | Loss of redundancy in pressurizing air supply to 480 V Board Room 1A and Battery Room I and V<br><br>Low flow on 1-FS-31-462-A will automatically stop Fan 1A2-B and Battery Board Room Exhaust fan 1A2-B and, will automatically start Fan 1A1-A and Battery Room Exhaust fan 1A1-A.<br><br>(See Remark #2.) | None (See 'Remarks') | 1. Fan is controlled by locally mounted stop-start push button stations in conjunction with auto-start switches in MCR.<br><br>2. Pressurizing Fan 1A2-B is interlocked with Battery Board Room I Exhaust Fan 1A1-A and 480 V Room 1A Fan 1A1-A such that when Fan 1A2-B is in auto-standby, low flow of either of the 1A1-A Fans will start 1-FAN-31-463B and stop 1-FAN-31-462A.<br><br>3. A review of the schematics establishes the separation and redundancy of the Train A and B fans. The loss of nondivisional train associated power supply for the separation relay will not prevent the switchover from a failed pressurizing fan to the standby fan. |
| | | | Failure to stop when Train A fan starts. | Spurious low flow signal; Hot short in control wiring; Operator error. | Indicating lights in MCR (1-HS-31-463A). | Overpressurization of 480 V Board Room 1A.<br><br>(See 'Remarks') | None (See 'Remarks') | Insignificant increase in air flow to 480 V Board Room 1A and Mechanical Equipment Room 1A. Battery room I will not be overpressurized without a second failure. |

**Table 9.4-5**
**(Sheet 13 of 41)**
**FAILURE MODES AND EFFECTS ANALYSIS FOR ACTIVE FAILURES SUBSYSTEM: AUXILIARY BOARD ROOMS AIR CONDITIONING SYSTEM**

| Item No. | Component | Function | Failure Mode | Potential Cause | Method of Detection | Effect on System | Effect on Plant | Remarks |
|---|---|---|---|---|---|---|---|---|
| 13 | 1-FAN-31-478-A<br><br>Pressurizing Supply Fan 1B1-A (Train A) | Provides pressurizing air flow to 480 V Board Room 1B Battery Room II and partial makeup air to the FVBR | Fails to start; Fails while running | Mechanical failure; Train B power failure; Control signal failure; Operator error (handswitch in wrong position) | Indicating lights in MCR (1-HS-31-478A). Locally, 1-HS-31-478B ANN 19-11 low flow from Press. Fans | Loss of redundancy in pressurizing air supply to 480 V Board Room 1B and Battery Room II<br><br>Low flow on 1-FS-31-477-B will automatically stop Fan 1B1-A and Battery Board Room Exhaust fan 1B1-A and, will automatically start Fan 1B2-B and Battery Room Exhaust fan 1B2-B. (See Remark #2.) | None (See 'Remarks') | 1. Fan is controlled by locally mounted stop-start push button stations in conjunction with auto-start switches in MCR.<br><br>2. Pressurizing Fan 1B1-A is interlocked with Battery Room I Exhaust Fan 1B-A and 480 V Room 1B pressurizing Fan 1B2-B such that when Fan 1B1-A is in auto-standby, low flow on either of the 1B2-B Fans will start 1-FAN-31-478-A and stop 1-FAN-31-477-B.<br><br>3. A review of the schematics establishes the separation and redundancy of the Train A and B fans. The loss of nondivisional train associated power supply for the separation relay will not prevent the switchover from a failed pressurizing fan to the standby fan. |
| | | | Failure to stop when Train B fan starts. | Spurious low flow signal; Hot short in control wiring; Operator error. | Indicating lights in MCR (1-HS-31-478A). | Overpressurization of 480 V Board Room 1B.<br><br>(See 'Remarks') | None (See 'Remarks') | Insignificant increase in air flow to 480 V Board Room 1B and Mechanical Equipment Room 1B. Battery room I will not be overpressurized without second failure. |

**Table 9.4-5**
**(Sheet 14 of 41)**
**FAILURE MODES AND EFFECTS ANALYSIS FOR ACTIVE FAILURES SUBSYSTEM: AUXILIARY BOARD ROOMS AIR CONDITIONING SYSTEM**

| Item No. | Component | Function | Failure Mode | Potential Cause | Method of Detection | Effect on System | Effect on Plant | Remarks |
|---|---|---|---|---|---|---|---|---|
| 14 | 1-FAN-31-477-B<br><br>Pressurizing Supply Fan 1B2-B (Train B) | Provides pressurizing air flow to 480 V Board Room 1B and Battery Room II and partial makeup air to the FVBR | Fails to start; Fails while running | Mechanical failure; Train B power failure; Control signal failure; Operator error (handswitch in wrong position) | Indicating lights in MCR (1-HS-31-477A). Locally, HS-31-477B ANN 19-11 low flow from Press. Fans | Loss of redundancy in pressurizing air supply to 480 V Board Room 1B and Battery Room II<br><br>Low flow on 1-FS-31-478-A will automatically stop Fan 1B2-B and Battery Room Exhaust fan 1B2-B and, will automatically start Fan 1B1-A and Battery Room Exhaust fan 1B1-A.<br><br>(See Remark #2.) | None (See 'Remarks') | 1. Fan is controlled by locally mounted stop-start push button stations in conjunction with auto-start switches in MCR.<br><br>2. Pressurizing Fan 1B2-B is interlocked with Battery Room II Exhaust Fan 1B2-B and 480 V Room 1B pressurizing Fan 1B1-A such that when Fan 1B2-B is in auto-standby, low flow on either of the 1B1-A Fans will start 1-FAN-31-477-B and stop 1-FAN-31-478-A.<br><br>3. A review of the schematics establishes the separation and redundancy of the Train A and B fans. The loss of non-divisional train associated power supply for the separation relay will not prevent the switchover from a failed pressurizing fan to the standby fan. |
| | | | Failure to stop when Train A fan starts. | Spurious low flow signal; Hot short in control wiring; Operator error. | Indicating lights in MCR (1-HS-31-477A-B). | Overpressurization of 480 V Board Room 1B.<br><br>(See 'Remarks') | None (See 'Remarks') | Insignificant increase in air flow to 480 V Board Room 1B and Mechanical Equipment Room 1B. Battery room II will not be overpressurized without a second failure. |

**Table 9.4-5**
**(Sheet 15 of 41)**
**FAILURE MODES AND EFFECTS ANALYSIS FOR ACTIVE FAILURES SUBSYSTEM: AUXILIARY BOARD ROOMS AIR CONDITIONING SYSTEM**

| Item No. | Component | Function | Failure Mode | Potential Cause | Method of Detection | Effect on System | Effect on Plant | Remarks |
|---|---|---|---|---|---|---|---|---|
| 15 | 1-FAN-31-287-A<br><br>Exhaust Fan 1A1- A for Battery Room 1 (Train A). | Exhausts air from Battery Room 1 to prevent hydrogen build-up. | Fails to start; Fails while running. | Mechanical failure; Train A power failure; spurious low flow signal. | Local indicating light for Damper 1-FCO-31-287-A closure. Motor running light on MCC. | Loss of redundancy in exhausting Battery Room 1.<br><br>On low flow from pressurizing or Battery Room Exhaust Fan 1A1-A, the Train B Pressurizing Fan 1A2–B and the Battery Room Exhaust Fan 1A2-B will automatically start. Damper 1-FCO-31-288-B will open. | None. | 1. Interlocked with Pressurizing Fan 1A1-A such that the Battery Room Exhaust Fan starts when the Pressurizing Fan starts and stops when the Pressurizing Fan stops.<br><br>2. A review of the schematics establishes the independence of the Train A and B fans. |

**Table 9.4-5**
**(Sheet 16 of 41)**
**FAILURE MODES AND EFFECTS ANALYSIS FOR ACTIVE FAILURES SUBSYSTEM: AUXILIARY BOARD ROOMS AIR CONDITIONING SYSTEM**

| Item No. | Component | Function | Failure Mode | Potential Cause | Method of Detection | Effect on System | Effect on Plant | Remarks |
|---|---|---|---|---|---|---|---|---|
| 16 | 1-FAN-31-288-B<br><br>Exhaust Fan 1A2-B for Battery Room 1 (Train B). | Exhausts air from Battery Room 1 to prevent hydrogen build-up. | Fails to start; Fails while running. | Mechanical failure; Train B power failure; spurious low flow signal. | Local indicating light for damper 1-FCO-31-288-B closure. Motor running light on MCC. | Loss of redundancy in exhausting Battery Room 1.<br><br>On low flow from pressurizing or Battery Room Exhaust Fan 1A2-B, the Train A Pressurizing Fan 1A1–A and the Battery Room Exhaust Fan 1A2-B will automatically start. Damper 1-FCO-31-287-A will open. | None. (See Remarks) | 1. Interlocked with Pressurizing Fan 1A2-B such that the Battery Room Exhaust Fan starts when the Pressurizing Fan starts and stops when the Pressurizing Fan stops.<br><br>2. A review of the schematics establishes the independence of the Train A and B fans. |

**Table 9.4-5**
**(Sheet 17 of 41)**
**FAILURE MODES AND EFFECTS ANALYSIS FOR ACTIVE FAILURES SUBSYSTEM: AUXILIARY BOARD ROOMS AIR CONDITIONING SYSTEM**

| Item No. | Component | Function | Failure Mode | Potential Cause | Method of Detection | Effect on System | Effect on Plant | Remarks |
|---|---|---|---|---|---|---|---|---|
| 17 | 1-FAN-31-285-A<br><br>Exhaust Fan 1B1-A for Battery II (Train A) | Exhausts air from Battery Room II to prevent hydrogen build-up. | Fails to start; Fails while running. | Mechanical failure; Train A power failure; spurious low flow signal. | Local indicating light for damper 1-FCO-31-285-A closure. Motor running light on MCC. | Loss of redundancy in exhausting Battery Room II.<br><br>One low flow from pressurizing or Battery Room Exhaust Fan 1B1-A, the Train B Pressurizing Fan 1B2–B and the Battery Room Exhaust Fan will automaticaly start. Damper 1-FCO-31-286-A will open. | None. | 1. Interlocked with Pressurizing Fan 1B1-A such that the Battery Room Exhaust Fan starts and stops whtn the Pressurizing Fan starts.<br><br>2. A review of the schematics restablishes the independance of the Train A and B fans. |

**Table 9.4-5**
**(Sheet 18 of 41)**
**FAILURE MODES AND EFFECTS ANALYSIS FOR ACTIVE FAILURES SUBSYSTEM: AUXILIARY BOARD ROOMS AIR CONDITIONING SYSTEM**

| Item No. | Component | Function | Failure Mode | Potential Cause | Method of Detection | Effect on System | Effect on Plant | Remarks |
|---|---|---|---|---|---|---|---|---|
| 18 | 1-FAN-31-286-B<br><br>Exhaust Fan 1B2-B for Battery Room II (Train B). | Exhausts air from Battery Room II to prevent hydrogen build-up. | Fails to start; Fails while running. | Mechanical failure; Train B power failure; spurious low flow signal. | Local indicating light for Damper 1-FCO-31-286-B closure. Motor running light on MCC. | Loss of redundancy in exhausting Battery Room II.<br><br>On low flow from pressurizing or Battery Room Exhaust Fan 1B2-B, the Train A Pressurizing Fan 1B1–A and the Battery Room Exhaust Fan 1B1-A will automatically start. Damper 1-FCO-31-285-B will open. | None. | 1. Interlocked with Pressurizing Fan 1B2-B such that the Battery Room Exhaust Fan starts when the Pressurizing Fan starts and stops when the Pressurizing Fan stops.<br><br>2. A review of the schematics establishes the independence of the Train A and B fans. |

**Table 9.4-5**
**(Sheet 19 of 41)**
**FAILURE MODES AND EFFECTS ANALYSIS FOR ACTIVE FAILURES SUBSYSTEM: AUXILIARY BOARD ROOMS AIR CONDITIONING SYSTEM**

| Item No. | Component | Function | Failure Mode | Potential Cause | Method of Detection | Effect on System | Effect on Plant | Remarks |
|---|---|---|---|---|---|---|---|---|
| 19 | 2-FAN-31-462-A<br><br>Pressurizing Supply Fan 2A1-A (Train A) | Provides pressurizing air flow to 480 V Board Room 2A and Battery Room IV. | Fails to start; Fails while running | Mechanical failure; Train A power failure; Control signal failure; Operator error (handswitch in wrong position) | Indicating lights in MCR (2-HS-31-462-A). Locally, 2-HS-31-462B. ANN 19-9 low flow from Press. Fans | Loss of redundancy in pressurizing air supply to 480 V Board Room 2A and Battery Room IV<br><br>Low flow on 2-FS-31-462-A will automatically stop Fan 2A1-A and Battery Room Exhaust fan 2A1-A; and, will automatically start Fan 2A2-B and Battery Room Exhaust fan 2A2-B.<br><br>See Remark #2. | None (See Remarks) | 1. Fan is controlled by locally mounted stop-start push button stations in conjunction with auto-start switches in MCR.<br><br>2. Pressurizing Fan 2A1-A is interlocked with Battery Room IV Exhaust Fan 2A2-B and 480 V Room 2A Fan 2A2-B such that when Fan 2A1-A is in auto-standby, low flow on either of the 2A2-B Fans will start 2-FAN-31-462-A and stop 2-FAN-31-463-B.<br><br>3. A review of the schematics establishes the separation and redundancy of the Train A and B fans. The loss of non-divisional train associated power supply for the separation relay will not prevent the switchover from a failed pressurizing fan to the standby fan. |
| | | | Failure to stop when Train B fan starts. | Spurious low flow signal; Hot short in control wiring; Operator error. | Indicating lights in MCR (2-HS-31-462A). | Overpressurization of 480 V Board Room 2A.<br><br>(See Remarks) | None (See Remarks) | Insignificant increase in air flow to 480 V Board Room 2A and Mechanical Equipment Room 2A. Battery room IV will not be overpressurized without a second failure. |

**Table 9.4-5**
**(Sheet 20 of 41)**
**FAILURE MODES AND EFFECTS ANALYSIS FOR ACTIVE FAILURES SUBSYSTEM: AUXILIARY BOARD ROOMS AIR CONDITIONING SYSTEM**

| Item No. | Component | Function | Failure Mode | Potential Cause | Method of Detection | Effect on System | Effect on Plant | Remarks |
|---|---|---|---|---|---|---|---|---|
| 20 | 2-FAN-31-463-B<br><br>Pressurizing Supply Fan 2A2-B (Train B) | Provides pressurizing air flow to 480 V Board Room 2A and Battery Room IV. | Fails to start; Fails while running | Mechanical failure; Train B power failure; Control signal failure; Operator error (handswitch in wrong position) | Indicating lights in MCR (2-HS-31-463-A). Locally, 2-HS-31-463B ANN 19-9 low flow from Press. Fans | Loss of redundancy in pressurizing air supply to 480 V Board Room 2A and Battery Room IV<br><br>Low flow on 2-FS-31-463-B will automatically stop Fan 2A2-B and Battery Room Exhaust fan 2A2-B and, will automatically start Fan 2A1-A and Battery Room Exhaust fan 2A1-A.<br><br>See Remark #2. | None (See Remarks) | 1. Fan is controlled by locally mounted stop-start push button stations in conjunction with auto-start switches in MCR.<br><br>2. Pressurizing Fan 2A2-B is interlocked with Battery Board Room IV Exhaust Fan 2A1-A and 480 V Room 2A Fan 2A1-A such that when Fan 2A2-B is in auto-standby, low flow on either of the 2A1-A Fans will start 2-FAN-31-463-B and stop 2-FAN-31-462-A.<br><br>3. A review of the schematics establishes the separation and redundancy of the Train A and B fans. The loss of non-divisional train associated power supply for the separation relay will not prevent the switchover from a failed pressurizing fan to the standby fan. |
| | | | Failure to stop when Train A fan starts. | Spurious low flow signal; Hot short in control wiring; Operator error. | Indicating lights in MCR (2-HS-31-463A). | Overpressurization of 480 V Board Room 2A.<br><br>(See Remarks) | None(See Remarks) | Insignificant increase in air flow to 480 V Board Room 2A and Mechanical Equipment Room 2A. Battery room IV will not be overpressurized without a second failure. |

**Table 9.4-5**
**(Sheet 21 of 41)**
**FAILURE MODES AND EFFECTS ANALYSIS FOR ACTIVE FAILURES SUBSYSTEM: AUXILIARY BOARD ROOMS AIR CONDITIONING SYSTEM**

| Item No. | Component | Function | Failure Mode | Potential Cause | Method of Detection | Effect on System | Effect on Plant | Remarks |
|---|---|---|---|---|---|---|---|---|
| 21 | 2-FAN-31-478-A<br><br>Pressurizing Supply Fan 2B1-A (Train A) | Provides pressurizing air flow to 480 V Board Room 2B and Battery Room III. | Fails to start; Fails while running | Mechanical failure; Train A power failure; Control signal failure; Operator error (handswitch in wrong position) | Indicating lights in MCR (2-HS-31-478-A). Locally, 2-HS-31-478B. ANN 19-11 low flow from Press. Fans | Loss of redundancy in pressurizing air supply to 480 V Board Room 2B and Battery Room III<br><br>Low flow on 2-FS-31-478-A will automatically stop Fan 2B1-A and Battery Room Exhaust fan 2B1-A and, will automatically start Fan 2B2-B and Battery Room Exhaust Fan 2B2-B.<br><br>See Remark #2. | None (See Remarks) | 1. Fan is controlled by locally mounted stop-start push button stations in conjunction with auto-start switches in MCR.<br><br>2. Pressurizing Fan 2B1-A is interlocked with Battery Board Room IV Exhaust Fan 2B2-B and 480 V Room 2B Fan 2B2-B such that when Fan 2B1-A is in auto-standby, low flow on either of the 2B2-B Fans will start 2-FAN-31-478-A and stop 2-FAN-31-477-B.<br><br>3. A review of the schematics establishes the separation and redundancy of the train A and B fans. The loss of non-divisional train associated power supply for the separation relay will not prevent the switchover from a failed pressurizing fan to the standby fan. |
| | | | Failure to stop when Train B fan starts. | Spurious low flow signal; Hot short in control wiring; Operator error. | Indicating lights in MCR (2-HS-31-478A). | Overpressurization of 480 V Board Room 2B.<br><br>(See Remarks) | None (See Remarks) | Insignificant increase in air flow to 480 V Board Room 2B and Mechanical Equipment Room 2B. Battery room III will not be overpressurized without a second failure. |

**Table 9.4-5**
**(Sheet 22 of 41)**
**FAILURE MODES AND EFFECTS ANALYSIS FOR ACTIVE FAILURES SUBSYSTEM: AUXILIARY BOARD ROOMS AIR CONDITIONING SYSTEM**

| Item No. | Component | Function | Failure Mode | Potential Cause | Method of Detection | Effect on System | Effect on Plant | Remarks |
|---|---|---|---|---|---|---|---|---|
| 22 | 2-FAN-31-477-B<br><br>Pressurizing Supply Fan 2B2-B (Train B) | Provides pressurizing air flow to 480 V Board Room 2B and Battery Room III. | Fails to start; Fails while running | Mechanical failure; Train B power failure; Control signal failure; Operator error (handswitch in wrong position) | Indicating lights in MCR (2-HS-31-477-A). Locally, 2-HS-31-477-B. ANN 19-11 low flow from Press. Fans | Loss of redundancy in pressurizing air supply to 480 V Board Room 2B and Battery Room III<br><br>Low flow on 2-FS-31-477-B will automatically stop Fan 2B2-B and Battery Room Exhaust fan 2B2-B and, will automatically start Fan 2B1-A and Battery Room Exhaust fan 2B1-A.<br><br>See Remark #2. | None (See Remarks) | 1. Fan is controlled by locally mounted stop-start push button stations in conjunction with auto-start switches in MCR.<br><br>2. Pressurizing Fan 2B2-B is interlocked with Battery Board Room III Exhaust Fan 2B1-A and 480 V Room 2B Fan 2B1-A such that when Fan 2B2-B is in auto-standby, low flow on either of the 2B1-A Fans will start 2-FAN-31-477-B and stop 2-FAN-31-478-A.<br><br>3. A review of the schematics establishes the separation and redundancy of the train A and B fans. The loss of non-divisional train associated power supply for the separation relay will not prevent the switchover from a failed pressurizing fan to the standby fan. |
| | | | Failure to stop when Train A fan starts. | Spurious low flow signal; Hot short control wiring; Operator error. | Indicating lights in MCR (2-HS-31-477A). | Overpressurization of 480 V Board Room 2A.<br><br>(See Remarks) | None (See Remarks) | Insignificant increase in air flow to 480 V Board Room 2B and Mechanical Equipment Room 2B. Battery room III will not be overpressurized without a second failure. |

**Table 9.4-5**
**(Sheet 23 of 41)**
**FAILURE MODES AND EFFECTS ANALYSIS FOR ACTIVE FAILURES SUBSYSTEM: AUXILIARY BOARD ROOMS AIR CONDITIONING SYSTEM**

| Item No. | Component | Function | Failure Mode | Potential Cause | Method of Detection | Effect on System | Effect on Plant | Remarks |
|---|---|---|---|---|---|---|---|---|
| 23 | 2-FAN-31-287-A<br><br>Exhaust Fan 2A1- A for Battery Room IV (Train A). | Exhausts air from Battery Room IV to prevent hydrogen build-up. | Fails to start; Fails while running. | Mechanical failure; Train A power failure; spurious low flow signal. | Local indicating light for Damper 2-FCO-31-287-A closure. Motor running light on MCC. | Loss of redundancy in exhausting Battery Room IV.<br><br>On low flow from pressurizing or Battery Room Exhaust Fan 2A1-A, the Train B Pressurizing Fan 2A2-B and the Exhaust Fan 2A2-B will automatically start. Damper 2-FCO-31-288-B will open. | None. (See Remarks) | 1. Interlocked with Pressurizing Fan 2A1-A such that the Exhaust Fan starts when the Pressurizing Fan starts and stops when the Pressurizing Fan stops.<br><br>2. A review of the schematics establishes the independence of the Train A and B fans. |

**Table 9.4-5**
**(Sheet 24 of 41)**
**FAILURE MODES AND EFFECTS ANALYSIS FOR ACTIVE FAILURES SUBSYSTEM: AUXILIARY BOARD ROOMS AIR CONDITIONING SYSTEM**

| Item No. | Component | Function | Failure Mode | Potential Cause | Method of Detection | Effect on System | Effect on Plant | Remarks |
|---|---|---|---|---|---|---|---|---|
| 24 | 2-FAN-31-288-B<br><br>Exhaust Fan 2A2-B for Battery Room IV (Train B). | Exhausts air from Battery Room IV to prevent hydrogen build-up. | Fails to start; Fails while running. | Mechanical failure; Train B power failure; spurious low flow signal. | Local indicating light for damper 2-FCO-31-288-A closure. Motor running light on MCC. | Loss of redundancy in exhausting Battery Room IV.<br><br>On low flow from Pressurizing or Battery Room Exhaust Fan 2A1-B, the Train A Pressurizing Fan 2A1-A and the Exhaust Fan 2A1-A will automatically start. Damper 2-FCO-31-287-A will open. | None. (See Remarks) | 1. Interlocked with Pressurizing Fan 2A2-B such that the Exhaust Fan starts when the Pressurizing Fan starts and stops when the Pressurizing Fan stops.<br><br>2. A review of the schematics establishes the independence of the Train A and B fans. |

**Table 9.4-5**
**(Sheet 25 of 41)**
**FAILURE MODES AND EFFECTS ANALYSIS FOR ACTIVE FAILURES SUBSYSTEM: AUXILIARY BOARD ROOMS AIR CONDITIONING SYSTEM**

| Item No. | Component | Function | Failure Mode | Potential Cause | Method of Detection | Effect on System | Effect on Plant | Remarks |
|---|---|---|---|---|---|---|---|---|
| 25 | 2-FAN-31-285-A<br><br>Exhaust Fan 2B1-A for Battery III (Train A). | Exhausts air from Battery Room III to prevent hydrogen build-up. | Fails to start; Fails while running. | Mechanical failure; Train A power failure; spurious low flow signal. | Local indicating light for damper 2-FCO-31-285-A closure. Motor running light on MCC. | Loss of redundancy in exhausting Battery Room III.<br><br>On low flow from Pressurizing or Battery Room Exhaust Fan 2B1-A, the Train B Pressurizing Fan 2B2-B and the Exhaust Fan 2B2-B will automatically start. Damper 2-FCO-31-286-A will open. | None. (See Remarks) | 1. Interlocked with Pressurizing Fan 2B1-A such that the Exhaust Fan starts when the Pressurizing Fan starts and stops when the Pressurizing Fan stops.<br><br>2. A review of the schematics establishes the independence of the Train A and B fans. |

**Table 9.4-5**
**(Sheet 26 of 41)**
**FAILURE MODES AND EFFECTS ANALYSIS FOR ACTIVE FAILURES SUBSYSTEM: AUXILIARY BOARD ROOMS AIR CONDITIONING SYSTEM**

| Item No. | Component | Function | Failure Mode | Potential Cause | Method of Detection | Effect on System | Effect on Plant | Remarks |
|---|---|---|---|---|---|---|---|---|
| 26 | 2-FAN-31-286-B<br><br>Exhaust Fan 2B2-B for Battery Room III (Train B). | Exhausts air from Battery Room III to prevent hydrogen build-up. | Fails to start; Fails while running. | Mechanical failure; Train B power failure; spurious low flow signal. | Local indicating light for Damper 2-FCO-31-286-B closure. Motor running light on MCC. | Loss of redundancy in exhausting Battery Room III.<br><br>On low flow from pressurizing or Battery Room Exhaust Fan 2B2-B, the Train A Pressurizing Fan 2B1-A and the Battery Room Exhaust Fan 2B1-A will automatically start. Damper 2-FCO-31-285-A will open. | None. (See Remarks) | 1. Interlocked with Pressurizing Fan 2B2-B such that the Exhaust Fan starts when the Pressurizing Fan starts and stops when the Pressurizing Fan stops.<br><br>2. A review of the schematics establishes the independence of the Train A and B fans. |
| 27 | 1-FCO-31-287-A<br><br>Tornado Damper (Exhaust Fan 1A1-A.) | Provides air flow to Exhaust Fan 1A1-A in Battery Room I. | Spuriously closes. | Mechanical failure; Hot short in control wiring; Operator error (handswitch placed in wrong position). | Mechanical Equipment Room damper status lights (1-ZS-31-287B-A). | Loss of redundancy in exhausting Battery Room I.<br><br>Low flow from 1A1-A Fans will automatically stop the fan from Train A, start Train B Press. Fan 1A2-B and Exhaust Fan 1A2-B which will open 1-FCO-31-288-B. | None. (See Remarks) | Damper is motor operated, and fails as is. Automatically controlled to open by Battery Room I Exhaust Fan 1A1-A. A review of the schematics establishes the independence of the control of Dampers 1-FCO-31-288-B and 1-FCO-31-287-A. |

**Table 9.4-5**
**(Sheet 27 of 41)**
**FAILURE MODES AND EFFECTS ANALYSIS FOR ACTIVE FAILURES SUBSYSTEM: AUXILIARY BOARD ROOMS AIR CONDITIONING SYSTEM**

| Item No. | Component | Function | Failure Mode | Potential Cause | Method of Detection | Effect on System | Effect on Plant | Remarks |
|---|---|---|---|---|---|---|---|---|
| 28 | 1-FCO-31-288-B<br><br>Tornado Damper (Exhaust Fan 1A2-B) | Provides air flow to Exhaust Fan 1A2-B in Battery Room I. | Spuriously closes. | Mechanical failure; Hot short in control wiring; Operator error (handswitch placed in wrong position). | Mechanical Equipment Room damper status lights (1-ZS-31-288A-B). | Loss of redundancy in exhausting Battery Room I.<br><br>Low flow from 1A2-B Fans will automatically stop the fan from Train B, start Train A Press. Fan 1A1-A and Exhaust Fan 1A1-A which will open 1-FCO-31-287-A. | None. (See Remarks) | Damper is motor operated, and fails as is. Automatically controlled to open by Battery Room I Exhaust Fan 1A2-B. A review of the schematics establishes the independence of the control of Dampers 1-FCO-31-287-A and 1-FCO-31-288-B. |
| 29 | 1-FCO-31-285-A<br><br>Tornado Damper (Exhaust Fan 1B1-A) | Provides air flow to Exhaust Fan 1B1-A in Battery Room II. | Spuriously closes. | Mechanical failure; Hot short in control wiring; Operator error (handswitch placed in wrong position). | Mechanical Equipment Room damper status lights (1-ZS-31-285B-A). | Loss of redundancy in exhausting Battery Room II.<br><br>Low flow from 1B1-A Fans will automatically stop the fan from Train A, start Train B Press. Fan 1B2-B and Exhaust Fan 1B2-B which will open 1-FCO-31-286-B. | None. (See Remarks) | Damper is motor operated, and fails as is. Automatically controlled to open by Battery Room II Exhaust Fan 1B1-A. A review of the schematics establishes the independence of the control of Dampers 1-FCO-31-285-A and 1-FCO-31-286-B. |

**Table 9.4-5**
**(Sheet 28 of 41)**
**FAILURE MODES AND EFFECTS ANALYSIS FOR ACTIVE FAILURES SUBSYSTEM: AUXILIARY BOARD ROOMS AIR CONDITIONING SYSTEM**

| Item No. | Component | Function | Failure Mode | Potential Cause | Method of Detection | Effect on System | Effect on Plant | Remarks |
|---|---|---|---|---|---|---|---|---|
| 30 | 1-FCO-31-286-B<br><br>Tornado Damper (Exhaust Fan 1B2-B). | Provides air flow to Exhaust Fan 1B2-B in Battery Room II. | Spuriously closes. | Mechanical failure; Hot short in control wiring; Operator error (handswitch placed in wrong position). | Mechanical Equipment Room damper status lights (1-ZS-31-286A-B). | Loss of redundancy in exhausting Battery Room II.<br><br>Low flow from 1B2-B Fans will automatically stop the fan from Train B, start Train A Press. Fan 1B1-A and Exhaust Fan 1B1-A which will open 1-FCO-31-285-A. | None. (See Remarks) | Damper is motor operated, and fails as is. Automatically controlled to open by Battery Room II Exhaust Fan 1B2-B. A review of the schematics establishes the independence of the control of Dampers 1-FCO-31-285-A and 1-FCO-31-286-B. |
| 31 | 2-FCO-31-287-A<br><br>Tornado Damper (Exhaust Fan 2A1-A). | Provides air flow to Exhaust Fan 2A1-A in Battery Room IV. | Spuriously closes. | Mechanical failure; Hot short in control wiring; Operator error (handswitch placed in wrong position). | Mechanical Equipment Room damper status lights (2-ZS-31-287B-A). | Loss of redundancy in exhausting Battery Room IV.<br><br>Low flow from 2A1-A Fans will automatically stop the fan from Train A, start Train B Press. Fan 2A2-B and Exhaust Fan 2A2-B which will open 2-FCO-31-288-B. | None. (See Remarks) | Damper is motor operated, and fails as is. Automatically controlled to open by Battery Room IV Exhaust Fan 2A1-A. A review of the schematics establishes the independence of the control of Dampers 2-FCO-31-287-A and 2-FCO-31-288-B. |

**Table 9.4-5**
**(Sheet 29 of 41)**
**FAILURE MODES AND EFFECTS ANALYSIS FOR ACTIVE FAILURES SUBSYSTEM: AUXILIARY BOARD ROOMS AIR CONDITIONING SYSTEM**

| Item No. | Component | Function | Failure Mode | Potential Cause | Method of Detection | Effect on System | Effect on Plant | Remarks |
|---|---|---|---|---|---|---|---|---|
| 32 | 2-FC0-31-288-B<br><br>Tornado Damper (Exhaust Fan 2A2-B. | Provides air flow to Exhaust Fan 2A2-B in Battery Room IV. | Spuriously closes. | Mechanical failure; Hot short in control wiring; Operator error (handswitch placed in wrong position). | Mechanical Equipment Room damper status lights (2-ZS-31-288A-B). | Loss of redundancy in exhausting Battery Room IV.<br><br>Low flow from 2A2-B Fans will automatically stop the fan from Train B, start Train A Press. Fan 2A1-A and Exhaust Fan 2A1-A which will open 2-FCO-31-287-A. | None. (See Remarks) | Damper is motor operated, and fails as is. Automatically controlled to open by Battery Room IV Exhaust Fan 2A2-B. A review of the schematics establishes the independence of the control of Dampers 2-FCO-31-287-A and 2-FCO-31-288-B. |
| 33 | 2-FCO-31-285-A<br><br>Tornado Damper (Exhaust Fan 2B1-A). | Provides air flow to Exhaust Fan 2B1-A in Battery Room III. | Spuriously closes. | Mechanical failure; Hot short in control wiring; Operator error (handswitch placed in wrong position). | Mechanical Equipment Room damper status lights (2-ZS-31-285B-A). | Loss of redundancy in exhausting Battery Room III.<br><br>Low flow from 2B1-A fans will automatically stop the fan from Train A, start Train B Press. Fan 2B2-B and Exhaust Fan 2B2-B which will open 2-FCO-31-286-B. | None. (See Remarks) | Damper is motor operated, and fails as is. Automatically controlled to open by Battery Room III Exhaust Fan 2B1-A. A review of the schematics establishes the independence of the control of Dampers 2-FCO-31-285-A and 2-FCO-31-286-B. |

**Table 9.4-5**
**(Sheet 30 of 41)**
**FAILURE MODES AND EFFECTS ANALYSIS FOR ACTIVE FAILURES SUBSYSTEM: AUXILIARY BOARD ROOMS AIR CONDITIONING SYSTEM**

| Item No. | Component | Function | Failure Mode | Potential Cause | Method of Detection | Effect on System | Effect on Plant | Remarks |
|---|---|---|---|---|---|---|---|---|
| 34 | 2-FCO-31-286-B<br><br>Tornado Damper (Exhaust Fan 2B2-B). | Provides air flow to Exhaust Fan 2B2-B in Battery Room III. | Spuriously closes. | Mechanical failure; Hot short in control wiring; Operator error (handswitch placed in wrong position). | Mechanical Equipment Room damper status lights (2-ZS-31-286A-B). | Loss of redundancy in exhausting Battery Room III.<br><br>Low flow from 2B2-B fans will automatically stop the fan from Train B, start Train A Press. Fan 2B1-A and Exhaust Fan 2B1-A which will open 2-FCO-31-285-A. | None. (See Remarks) | Damper is motor operated, and fails as is. Automatically controlled to open by Battery Room III Exhaust Fan 2B2-B. A review of the schematics establishes the independence of the control of Dampers 2-FCO-31-285-A and 2-FCO-31-286-B. |
| 35 | 0-FAN-31-493A-A<br><br>Fifth Vital Battery Supply Fan 1A1-A. | N/A | N/A | N/A | N/A | N/A | N/A | Abandoned in place. |
| 36 | 0-FC-31-487A<br><br>Battery Room V Intake Fan 1A1-A Hydramotor Controller. | N/A | N/A | N/A | | N/A | N/A | Abandoned in place. |
| 37 | 0-FCO-31-483-A<br><br>Tornado Damper for intake Fan 1A1-A FVBR. | N/A | N/A | N/A | N/A | N/A | N/A | Abandoned in place in “closed” position. |

**Table 9.4-5**
**(Sheet 31 of 41)**
**FAILURE MODES AND EFFECTS ANALYSIS FOR ACTIVE FAILURES SUBSYSTEM: AUXILIARY BOARD ROOMS AIR CONDITIONING SYSTEM**

| Item No. | Component | Function | Failure Mode | Potential Cause | Method of Detection | Effect on System | Effect on Plant | Remarks |
|---|---|---|---|---|---|---|---|---|
| 38 | 0-FAN-31-493B-A<br><br>FVBR Exhaust Fan 1B1-A. | Provides exhaust from Battery Room | Fails to run; Fails while running. | Mechanical failure; Train A power failure; Auto-start signal failure. | ANN 19-8 for low flow from intake fan or exhaust fan from either train.<br><br>Motor running light on MCC. | Loss of redundancy in exhausting Battery Room V.<br><br>The Train B fan is available to provide exhausting of Battery Room V, and will automatically start on low flow sensed in Train A s exhaust duct. | None. (See 'Remarks') | The fifth Vital Battery is housed in its own separate room, and functions as a spare to any of the four vital batteries during periodic testing and maintenance or cell failure during operation. The two trains of the ventilation system are 100% redundant. Upon low flow from Train A exhaust fan, the opposite train fans will start automatically and its dampers will open. Auto-start of the standby train is independent of the other train. Schematic diagrams were reviewed and it was determined that control from the opposite train flow element does not violate separation of redundant train. |
| 39 | 0-FCO-31-485-A<br><br>Tornado Damper for exhaust Fan 1B1-A FVBR. | Provides flow path for exhaust from Exhaust Fan 1B1-A | Fails to open (stuck closed); Spuriously closes. | Mechanical failure; Train A power failure; Operator error. | Local control station indicating lights. | Loss of redundancy in providing exhaust flowpath. | None. The Train B exhaust fan and its associated dampers are automatically controlled to start/open upon low flow from the operating exhaust fan. | Damper is solenoid actuated to fail closed upon loss of Train A power.<br><br>Interlocked to automatically open upon exhaust Fan 1B1-A start. |

**Table 9.4-5**
**(Sheet 32 of 41)**
**FAILURE MODES AND EFFECTS ANALYSIS FOR ACTIVE FAILURES SUBSYSTEM: AUXILIARY BOARD ROOMS AIR CONDITIONING SYSTEM**

| Item No. | Component | Function | Failure Mode | Potential Cause | Method of Detection | Effect on System | Effect on Plant | Remarks |
|---|---|---|---|---|---|---|---|---|
| 40 | 0-FAN-31-496A FVBR supply Fan 1A2-B. | N/A | N/A | N/A | N/A | N/A | N/A | Abandoned in place. |
| 41 | 0-FC-31-488A-B Battery Room V Intake Fan 1A2-B Hydramotor Controller. | N/A | N/A | N/A | N/A | N/A | N/A | Abandoned in place. |
| 42 | 0-FCO-31-484-B Tornado Damper for Intake Fan 1A2-B FVBR. | N/A | N/A | N/A | N/A | N/A | N/A | Abandoned in place. |

**Table 9.4-5**
**(Sheet 33 of 41)**
**FAILURE MODES AND EFFECTS ANALYSIS FOR ACTIVE FAILURES SUBSYSTEM: AUXILIARY BOARD ROOMS AIR CONDITIONING SYSTEM**

| Item No. | Component | Function | Failure Mode | Potential Cause | Method of Detection | Effect on System | Effect on Plant | Remarks |
|---|---|---|---|---|---|---|---|---|
| 43 | 0-FAN-31-496B<br><br>FVBR Exhaust Fan 1B2-B. | Provides exhaust form Battery Room V for ventilation. | Fails to run; Fails while running. | Mechanical failure; Train B power failure; Auto-start signal failure. | ANN 19-8 for low flow from intake fan or exhaust fan from either train.<br><br>Motor running light on MCC. | Loss of redundancy in exhausting Battery Room V.<br><br>The Train A fan is available to provide exhausting of Battery Room V, and will automatically start on low flow sensed in Train B exhaust duct. | None. (See Remarks) | The fifth Vital Battery is housed in its own separate room, and functions as a spare to any of the four vital batteries during periodic testing and maintenance or cell failure during operation. The two trains of the ventilation system are 100% redundant. Upon low flow from Train B exhaust fan, the opposite train fans will start automatically and its dampers will open. Auto-start of the standby train is independent of the other train. Schematic diagrams were reviewed and it was determined that control from the opposite train flow element does not violate separation of redundant train. |
| 44 | 0-FCO-31-486-B<br><br>Tornado Damper for exhaust Fan 1B2-B FVBR. | Provides flowpath for exhaust from Exhaust Fan 1B2-B. | Fails to open (stuck closed); Spuriously closes. | Mechanical failure; Train B power failure; Operator error. | Local Control Station indicating lights | Loss of redundancy in providing exhaust flowpath. | None. The Train A exhaust fan and its associated damper is automatically controlled to start/open upon low flow from the operating exhaust fan. | Low flow switch FS-31-492-B turns on the redundant fan pair (supply/exhaust) |

**Table 9.4-5**
**(Sheet 34 of 41)**
**FAILURE MODES AND EFFECTS ANALYSIS FOR ACTIVE FAILURES SUBSYSTEM: AUXILIARY BOARD ROOMS AIR CONDITIONING SYSTEM**

| Item No. | Component | Function | Failure Mode | Potential Cause | Method of Detection | Effect on System | Effect on Plant | Remarks |
|---|---|---|---|---|---|---|---|---|
| 45 | 1-BKD-31-2502<br><br>Back Draft Damper | Prevents flow of air through Pressurizing Supply Fan 1A1-A when Fan 1A2-B is running. | Fails to backseat. | Mechanical failure; | No direct indication of dampers closing<br><br>See Remark #1. | Loss of pressurizing air to rooms served by the fan. Bypass flow through the standby unit is required to start but may fail as a result of motor overload to overcome the reverse rotation. This would result in the total loss of the pressurizing fan and its paired Battery Room exhaust fan and damper.<br><br>See Remark #2. | None. (See Remarks) | 1. ANN low flow. Indicating lights of Fan 1A2-B running in MCR. Local indication of damper status resulting from potential low flow from fan(s).<br><br>2. Operability of dampers is periodically verified in accordance with preventative maintenance procedures. |

**Table 9.4-5**
**(Sheet 35 of 41)**
**FAILURE MODES AND EFFECTS ANALYSIS FOR ACTIVE FAILURES SUBSYSTEM: AUXILIARY BOARD ROOMS AIR CONDITIONING SYSTEM**

| Item No. | Component | Function | Failure Mode | Potential Cause | Method of Detection | Effect on System | Effect on Plant | Remarks |
|---|---|---|---|---|---|---|---|---|
| 46 | 1-BKD-31-2503<br><br>Back Draft Damper | Prevents flow of air through Pressurizing Supply Fan 1A2-B when Fan 1A1-A is running. | Fails to backseat. | Mechanical failure. | No direct indication of dampers closing<br><br>See Remark #1. | Loss of pressurizing air to rooms served by the fan. Bypass flow through the standby unit is required to start but may fail as a result of motor overload to overcome the reverse rotation. This would result in the total loss of the pressurizing fan and its paired Battery Room exhaust fan and damper.<br><br>See Remark #2. | None. (See Remarks) | 1. ANN low flow. Indicating lights of Fan 1A1-A running in MCR. Local indication of damper status resulting from potential low flow from fan(s).<br><br>2. Operability of dampers is periodically verified in accordance with preventative maintenance procedures. |

**Table 9.4-5**
**(Sheet 36 of 41)**
**FAILURE MODES AND EFFECTS ANALYSIS FOR ACTIVE FAILURES SUBSYSTEM: AUXILIARY BOARD ROOMS AIR CONDITIONING SYSTEM**

| Item No. | Component | Function | Failure Mode | Potential Cause | Method of Detection | Effect on System | Effect on Plant | Remarks |
|---|---|---|---|---|---|---|---|---|
| 47 | 2-BKD-31-2502<br><br>Back Draft Damper | Prevents flow of air through Pressurizing Supply Fan 2A1-A when Fan 2A2-B is running. | Fails to backseat. | Mechanical failure. | See Remark #1.<br><br>No direct indication of dampers closing | Loss of pressurizing air to rooms served by the fan. Bypass flow through the standby unit is required to start but may fail as a result of motor overload to overcome the reverse rotation. This would result in the total loss of the pressurizing fan and its paired Battery Room exhaust fan and damper.<br><br>See Remark #2. | None. (See Remarks) | 1. ANN low flow. Indicating lights of Fan 2A2-B running in MCR. Local indication of damper status resulting from potential low flow from fan(s).<br><br>2. Operability of dampers is periodically verified in accordance with preventative maintenance procedures. |

**Table 9.4-5**
**(Sheet 37 of 41)**
**FAILURE MODES AND EFFECTS ANALYSIS FOR ACTIVE FAILURES SUBSYSTEM: AUXILIARY BOARD ROOMS AIR CONDITIONING SYSTEM**

| Item No. | Component | Function | Failure Mode | Potential Cause | Method of Detection | Effect on System | Effect on Plant | Remarks |
|---|---|---|---|---|---|---|---|---|
| 48 | 2-BKD-31-2503<br><br>Back Draft Damper | Prevents flow of air through Pressurizing Supply Fan 2A2-B when Fan 2A1-A is running. | Fails to backseat. | Mechanical failure. | No direct indication of dampers closing<br><br>See Remark #1. | Loss of pressurizing air to rooms served by the fan. Bypass flow through the standby unit is required to start but may fail as a result of motor overload to overcome the reverse rotation. This would result in the total loss of the pressurizing fan and its paired Battery Room exhaust fan and damper.<br><br>See Remark #2. | None. (See Remarks) | 1. ANN low flow. Indicating lights of Fan 2A1-A running in MCR. Local indication of damper status resulting from potential low flow from fan(s).<br><br>2. Operability of dampers is periodically verified in accordance with preventative maintenance procedures. |

**Table 9.4-5**
**(Sheet 38 of 41)**
**FAILURE MODES AND EFFECTS ANALYSIS FOR ACTIVE FAILURES SUBSYSTEM: AUXILIARY BOARD ROOMS AIR CONDITIONING SYSTEM**

| Item No. | Component | Function | Failure Mode | Potential Cause | Method of Detection | Effect on System | Effect on Plant | Remarks |
|---|---|---|---|---|---|---|---|---|
| 49 | 1-BKD-31-2520<br><br>Back Draft Damper | Prevents flow of air through Pressurizing Supply Fan 1B1-A when Fan 1B2-B is running. | Fails to backseat. | Mechanical failure. | No direct indication of dampers closing<br><br>See Remark #1. | Loss of pressurizing air to rooms served by the fan. Bypass flow through the standby unit is required to start but may fail as a result of motor overload to overcome the reverse rotation. This would result in the total loss of the pressurizing fan and its paired Battery Room exhaust fan and damper.<br><br>See Remark #2. | None. (See Remarks) | 1. ANN low flow. Indicating lights of Fan 1B2-B running in MCR. Local indication of damper status resulting from potential low flow from fan(s).<br><br>2. Operability of dampers is periodically verified in accordance with preventative maintenance procedures. |

**Table 9.4-5**
**(Sheet 39 of 41)**
**FAILURE MODES AND EFFECTS ANALYSIS FOR ACTIVE FAILURES SUBSYSTEM: AUXILIARY BOARD ROOMS AIR CONDITIONING SYSTEM**

| Item No. | Component | Function | Failure Mode | Potential Cause | Method of Detection | Effect on System | Effect on Plant | Remarks |
|---|---|---|---|---|---|---|---|---|
| 50 | 1-BKD-31-2521<br><br>Back Draft Damper | Prevents flow of air through Pressurizing Supply Fan 1B2-B when Fan 1B1-A is running. | Fails to backseat. | Mechanical failure. | No direct indication of dampers closing<br><br>See Remark #1. | Loss of pressurizing air to rooms served by the fan. Bypass flow through the standby unit is required to start but may fail as a result of motor overload to overcome the reverse rotation. This would result in the total loss of the pressurizing fan and its paired Battery Room exhaust fan and damper.<br><br>See Remark #2. | None. (See Remarks) | 1. ANN low flow. Indicating lights of Fan 1B1-A running in MCR. Local indication of damper status resulting from potential low flow from fan(s).<br><br>2. Operability of dampers is periodically verified in accordance with preventative maintenance procedures. |

**Table 9.4-5**
**(Sheet 40 of 41)**
**FAILURE MODES AND EFFECTS ANALYSIS FOR ACTIVE FAILURES SUBSYSTEM: AUXILIARY BOARD ROOMS AIR CONDITIONING SYSTEM**

| Item No. | Component | Function | Failure Mode | Potential Cause | Method of Detection | Effect on System | Effect on Plant | Remarks |
|---|---|---|---|---|---|---|---|---|
| 51 | 2-BKD-31-2520<br><br>Back Draft Damper | Prevents flow of air through Pressurizing Supply Fan 2B1-A when Fan 2B2-B is running. | Fails to backseat. | Mechanical failure. | No direct indication of dampers closing<br><br>See Remark #1. | Loss of pressurizing air to rooms served by the fan. Bypass flow through the standby unit is required to start but may fail as a result of motor overload to overcome the reverse rotation. This would result in the total loss of the pressurizing fan and its paired Battery Room exhaust fan and damper.<br><br>See Remark #2. | None. (See Remarks) | 1. ANN low flow. Indicating lights of Fan 2B2-B running in MCR. Local indication of damper status resulting from potential low flow from fan(s).<br><br>2. Operability of dampers is periodically verified in accordance with preventative maintenance procedures. |

**Table 9.4-5**
**(Sheet 41 of 41)**
**FAILURE MODES AND EFFECTS ANALYSIS FOR ACTIVE FAILURES SUBSYSTEM: AUXILIARY BOARD ROOMS AIR CONDITIONING SYSTEM**

| Item No. | Component | Function | Failure Mode | Potential Cause | Method of Detection | Effect on System | Effect on Plant | Remarks |
|---|---|---|---|---|---|---|---|---|
| 52 | 2-BKD-31-2521<br><br>Back Draft Damper | Prevents flow of air through Pressurizing Supply Fan 2B2-B when Fan 2B1-A is running. | Fails to backseat. | Mechanical failure. | No direct indication of dampers closing<br><br>See Remark #1. | Loss of pressurizing air to rooms served by the fan. Bypass flow through the standby unit is required to start but may fail as a result of motor overload to overcome the reverse rotation. This would result in the total loss of the pressurizing fan and its paired Battery Room exhaust fan and damper.<br><br>See Remark #2. | None. (See Remarks) | 1. ANN low flow. Indicating lights of Fan 2B1-A running in MCR. Local indication of damper status resulting from potential low flow from fan(s).<br><br>2. Operability of dampers is periodically verified in accordance with preventative maintenance procedures. |

**Table 9.4-6 Failure Modes and Effects Analysis for Active Failures Subsystem: 480 V Shutdown Transformer Room Ventilation (Sheet 1 of 18)**

| ITEM NO. | COMPONENT IDENTIFICATION | FUNCTION | FAILURE MODE | POTENTIAL CAUSE | METHOD OF DETECTION | EFFECT ON SYSTEM | EFFECT ON PLANT | REMARKS |
|---|---|---|---|---|---|---|---|---|
| 1 | 1-FAN-30-244F-A<br><br>Exhaust Fan | Exhausts air from 480V Transformer Room 1A. | Fails to run; Fails while running. | Mechanical failure; Train A power failure; Temperature control sensing failure; Control signal failure. | Motor running light on MCC. | Loss of one safety related fan. | None. (See Remarks) | 1. The four (4) exhaust fans (3 safety- related) in 480V Transformer Room 1A are interlocked to automatically start/stop in staged series by thermostatic control.<br><br>2. The inlet dampers are interlocked to automatically open when any fan is running.<br><br>3. Schematics have been reviewed and it was determined that rooms 1A and 1B, containing redundant electrical equipment, are independent of each other.<br><br>4. Room temperature is indicated on Local Panel L-362.<br><br>5. Two of the three safety-related fans are sufficient to adequately ventilate each 480V Transformer Room. |
| | | | Spuriously runs. | Control signal failure; Temperature control sensing failure; Hot short in control wiring. | Indicating lights on MCC for fan motor running. | None. (See Remarks) | None. (See Remarks) | 1.The single failure condition of a fan continuing to run, or spuriously running during accident conditions concurrent with minimum outside design temperature, is analyzed to conclude that the space temeratures remain within allowable limits. |

**Table 9.4-6 Failure Modes and Effects Analysis for Active Failures Subsystem: 480 V Shutdown Transformer Room Ventilation (Sheet 2 of 18)**

| ITEM NO. | COMPONENT IDENTIFICATION | FUNCTION | FAILURE MODE | POTENTIAL CAUSE | METHOD OF DETECTION | EFFECT ON SYSTEM | EFFECT ON PLANT | REMARKS |
|---|---|---|---|---|---|---|---|---|
| 2 | 1-FAN-30-244G-A<br><br>Exhaust Fan | Exhausts air from 480 V Transformer Room 1A. | Fails to run; Fails while running. | Mechanical failure; Train A power failure; Temperature control sensing failure; Control signal failure. | Motor running light on MCC. | Loss of one safety related fan. | None. (See Remarks) | 1. The four (4) exhaust fans (3 safety-related) in 480 V Transformer Room 1A are interlocked to automatically start/stop in staged series by thermostatic control.<br><br>2. The inlet dampers are interlocked to automatically open when any fan is running.<br><br>3. Schematics have been reviewed and it was determined that rooms 1A and 1B, containing redundant electrical equipment, are independent of each other.<br><br>4. Room temperature is indicated on Local Panel L-362.<br><br>5. Two of the three safety-related fans are sufficient to adequately ventilate each 480V Transformer Room. |
| | | | Spuriously runs. | Control signal failure; Temperature control sensing failure; Hot short in control wiring. | Indicating lights on MCC for fan motor running. | None. (See Remarks) | None. (See Remarks) | 1. The single failure condition of a fan continuing to run, or spuriously running during accident conditions concurrent with minimum outside design temperature, is analyzed to conclude that the space temeratures remain within allowable limits. |

**Table 9.4-6 Failure Modes and Effects Analysis for Active Failures Subsystem: 480 V Shutdown Transformer Room Ventilation (Sheet 3 of 18)**

| ITEM NO. | COMPONENT IDENTIFICATION | FUNCTION | FAILURE MODE | POTENTIAL CAUSE | METHOD OF DETECTION | EFFECT ON SYSTEM | EFFECT ON PLANT | REMARKS |
|---|---|---|---|---|---|---|---|---|
| 3 | 1-FAN-30-244H-A<br><br>Exhaust Fan | Exhausts air from 480 V Transformer Room 1A. | Fails to run; Fails while running. | Mechanical failure; Train A power failure; Temperature control sensing failure; Control signal failure | Motor running light on MCC. | Loss of one safety related fan. | None. (See Remarks) | 1. The four (4) exhaust fans (3 safety-related) in 480 V Transformer Room 1A are interlocked to automatically start/stop in staged series by thermostatic control.<br><br>2. The inlet dampers are interlocked to automatically open when any fan is running.<br><br>3. Schematics have been reviewed and it was determined that rooms 1A and 1B, containing redundant electrical equipment, are independent of each other.<br><br>4. Room Temperature is indicated on Local Panel L-362.<br><br>5. Two of the three safety-related fans are sufficient to adequately ventilate each 480V Transformer Room. |
| | | | Spuriously runs. | Control signal failure; Temperature control sensing failure; Hot short in control wiring. | Indicating lights on MCC for fan motor running. | None. (See Remarks) | None. (See Remarks) | 1. Analysis shows that the single failure condition of a fan continuing to run, or spuriously running during accident conditions concurrent with minimum outside design temperature, is acceptable. |

**Table 9.4-6 Failure Modes and Effects Analysis for Active Failures Subsystem: 480 V Shutdown Transformer Room Ventilation (Sheet 4 of 18)**

| ITEM NO. | COMPONENT IDENTIFICATION | FUNCTION | FAILURE MODE | POTENTIAL CAUSE | METHOD OF DETECTION | EFFECT ON SYSTEM | EFFECT ON PLANT | REMARKS |
|---|---|---|---|---|---|---|---|---|
| 4 | 1-FAN-30-244J<br><br>Exhaust Fan (Non-safety) | Exhausts air from 480 V Transformer Room 1A | Spuriously runs. | Control signal failure; Temperature control sensing failure; Hot short in control wiring. | Indicating lights on MCC for fan motor running. | None.<br><br>. | None.<br><br>See Remark #2. | 1. This fan is electrically separate from the 1E circuit for the three safety-related fans.<br><br>2. Analysis shows that the single failure condition of a fan continuing to run, or spuriously running during accident conditions concurrent with minimum outside design temperature, is acceptable. |

**Table 9.4-6 Failure Modes and Effects Analysis for Active Failures Subsystem: 480 V Shutdown Transformer Room Ventilation (Sheet 5 of 18)**

| ITEM NO. | COMPONENT IDENTIFICATION | FUNCTION | FAILURE MODE | POTENTIAL CAUSE | METHOD OF DETECTION | EFFECT ON SYSTEM | EFFECT ON PLANT | REMARKS |
|---|---|---|---|---|---|---|---|---|
| 5 | 1-FAN-30-248E-B<br><br>Exhaust Fan | Exhausts air from 480 V Transformer Room 1B. | Fails to run; Fails while running. | Mechanical failure; Train B power failure; Temperature control sensing failure; Control signal failure. | Motor running light on MCC. | Loss of one safety related fan | None. (See Remarks) | 1. The three (3) exhaust fans (3 safety-related) in 480 V Transformer Room 1B are interlocked to automatically start/stop in staged series by thermostatic control.<br><br>2. The inlet dampers are interlocked to automatically open when any fan is running.<br><br>3. Schematics have been reviewed and it was determined that rooms 1A and 1B, containing redundant electrical equipment, are independent of each other.<br><br>4. Room temperature is indicated on Local Panel L-368.<br><br>5. Two of the three safety-related fans are sufficient to adequately ventilate each 480V Transformer Room. |
| | | | Spuriously runs. | Control signal failure; Temperature control sensing failure; Hot short in control wiring. | Indicating lights on MCC for fan motor running. | None. | None. | 1. Analysis shows that the single failure condition of a fan continuing to run, or spuriously running during accident conditions concurrent with minimum outside design temperature, is acceptable. |

**Table 9.4-6 Failure Modes and Effects Analysis for Active Failures Subsystem: 480 V Shutdown Transformer Room Ventilation (Sheet 6 of 18)**

| ITEM NO. | COMPONENT IDENTIFICATION | FUNCTION | FAILURE MODE | POTENTIAL CAUSE | METHOD OF DETECTION | EFFECT ON SYSTEM | EFFECT ON PLANT | REMARKS |
|---|---|---|---|---|---|---|---|---|
| 6 | 1-FAN-30-248F-B<br><br>Exhaust Fan | Exhausts air from 480 V Transformer Room 1B. | Fails to run; Fails while running. | Mechanical failure; Train B power failure; Temperature control sensing failure; Control signal failure | Motor running light on MCC. | Loss of one safety related fan. | None. (See Remarks) | 1. The three (3) exhaust fans (3 safety-related) in 480 V Transformer Room 1B are interlocked to automatically start/stop in staged series by thermostatic control.<br><br>2. The inlet dampers are interlocked to automatically open when any fan is running.<br><br>3. Schematics have been reviewed and it was determined that rooms 1A and 1B, containing redundant electrical equipment, are independent of each other.<br><br>4. Room temperature is indicated on Local Panel L-368.<br><br>5. Two of the three safety-related fans are sufficient to adequately ventilate each 480V Transformer Room. |
| | | | Spuriously runs. | Control signal failure; Temperature control sensing failure; Hot short in control wiring. | Indicating lights on MCC for fan motor running | None. (See Remarks) | None. (See Remarks) | 1. Analysis shows that the single failure condition of a fan continuing to run, or spuriously running during accident conditions concurrent with minimum outside design temperature, is acceptable. |

**Table 9.4-6 Failure Modes and Effects Analysis for Active Failures Subsystem: 480 V Shutdown Transformer Room Ventilation (Sheet 7 of 18)**

| ITEM NO. | COMPONENT IDENTIFICATION | FUNCTION | FAILURE MODE | POTENTIAL CAUSE | METHOD OF DETECTION | EFFECT ON SYSTEM | EFFECT ON PLANT | REMARKS |
|---|---|---|---|---|---|---|---|---|
| 7 | 1-FAN-30-248G-B<br><br>Exhaust Fan | Exhausts air from 480 V Transformer Room 1B. | Fails to run; Fails while running. | Mechanical failure; Train B power failure; Temperature control sensing failure; Control signal failure | Motor running light on MCC. | Loss of one safety related fan. | None. (See Remarks) | 1. The three (3) exhaust fans (3 safety-related) in 480 V Transformer Room 1B are interlocked to automatically start/stop in staged series by thermostatic control.<br><br>2. The inlet dampers are interlocked to automatically open when any fan is running.<br><br>3. Schematics have been reviewed and it was determined that rooms 1A and 1B, containing redundant electrical equipment, are independent of each other.<br><br>4. Room temperature is indicated on Local Panel L-368.<br><br>5. Two of the three safety-related fans are sufficient to adequately ventilate each 480V Transformer Room. |
| | | | Spuriously runs. | Control signal failure; Temperature control sensing failure; Hot short in control wiring. | Indicating lights on MCC for fan motor running | None. (See Remarks) | None. (See Remarks) | 1. Analysis shows that the single failure condition of a fan continuing to run, or spuriously running during accident conditions concurrent with minimum outside design temperature, is analyzed to conclude that the space temperatures remain within allowable limits.. |

**Table 9.4-6 Failure Modes and Effects Analysis for Active Failures Subsystem: 480 V Shutdown Transformer Room Ventilation (Sheet 8 of 18)**

| ITEM NO. | COMPONENT IDENTIFICATION | FUNCTION | FAILURE MODE | POTENTIAL CAUSE | METHOD OF DETECTION | EFFECT ON SYSTEM | EFFECT ON PLANT | REMARKS |
|---|---|---|---|---|---|---|---|---|
| 8 | 1-FCO-30-244A and -244B<br><br>Intake Dampers | Permits flow of air supply from air intake to 480 V Transformer Room 1A. | Spuriously closes; Fails to open. | Mechanical failure; Auto-open signal failure; Hot short in control wiring. | MCR indicating lights 1-ZS-30-244A and -244B). | Loss of redundancy in intake air supply. 100% redundant intake damper can supply sufficient air. | None.<br><br>See Remark #3. | 1. Both intake dampers are interlocked to automatically open when any of the four (4) exhaust fans are either automatically or manually started.<br><br>2. Dampers fail open upon loss of control air or Train A power to 1-FSB-30-244A and -244B.<br><br>3. 1-FSV-30-244A and -244B and the air pressure regulators, 1-PREG-30-244A and -244B, that regulate the air pressure to these FSVs are Q-Listed as Quality- related, not safety-related. Failure of the air regulators either by blockage or sticking full open will not impact the capability of the damper to open.<br><br>Failure of the solenoid to de-energize to close the damper is included in the mechanical failure mode of the damper.<br><br>The nonsafety-related solenoid is properly isolated in the 1E circuit. |

**Table 9.4-6 Failure Modes and Effects Analysis for Active Failures Subsystem: 480 V Shutdown Transformer Room Ventilation (Sheet 9 of 18)**

| ITEM NO. | COMPONENT IDENTIFICATION | FUNCTION | FAILURE MODE | POTENTIAL CAUSE | METHOD OF DETECTION | EFFECT ON SYSTEM | EFFECT ON PLANT | REMARKS |
|---|---|---|---|---|---|---|---|---|
| 9 | 1-FCO-30-248A and -248B<br><br>Intake Dampers. | Permits flow of air supply from air intake to 480 V Transformer Room 1B. | Spuriously closes; Fails to open. | Mechanical failure; Auto-open signal failure; Hot short in control wiring. | MCR indicating lights (1-ZS-30-248A and -248B). | Loss of redundancy in intake air supply.<br><br>100% redundant intake damper can supply sufficient air. | None.<br><br>See Remark #3. | 1. Both intake dampers are interlocked to automatically open when any of the three (3) exhaust fans are either automatically or manually started.<br><br>2. Dampers fail open upon loss of control air loss or Train B power to 1-FSV-30-248A and -248B.<br><br>3. 1-FSV-30-248A and -248B and the air pressure regulators, 1-PREG-30-248A and -248B, that regulate the air pressure to these FSVs are Q-Listed as Quality- related, not safety-related. Failure of the air regulators either by blockage or sticking full open will not impact the capability of the damper to open.<br><br>Failure of the solenoid to de-energize to close the damper is included in the mechanical failure mode of the damper.<br><br>The nonsafety-related solenoid is properly isolated in the 1E circuit. |

**Table 9.4-6 Failure Modes and Effects Analysis for Active Failures Subsystem: 480 V Shutdown Transformer Room Ventilation (Sheet 10 of 18)**

| ITEM NO. | COMPONENT IDENTIFICATION | FUNCTION | FAILURE MODE | POTENTIAL CAUSE | METHOD OF DETECTION | EFFECT ON SYSTEM | EFFECT ON PLANT | REMARKS |
|---|---|---|---|---|---|---|---|---|
| 10 | 2-FAN-30-250E-A<br><br>Exhaust Fan | Exhausts air from 480 V Transformer Room 2A. | Fails to run; Fails while running. | Mechanical failure; Train A power failure; Temperature control sensing failure; Control signal failure | Motor running light on MCC. | Loss of one safety related fan. | None. (See Remarks) | 1. The three (3) exhaust fans (3 safety-related) in 480 V Transformer Room 2A are interlocked to automatically start/stop in staged series by thermostatic control.<br><br>2. The inlet dampers are interlocked to automatically open when any fan is running.<br>3. Schematics have been reviewed and it was determined that rooms 2A and 2B, containing redundant electrical equipment, are independent of each other.<br><br>4. Room temperature is indicated on Local Panel L-368.<br><br>5. Two of the three safety-related fans are sufficient to adequately ventilate each 480V Transformer Room. |
| | | | Spuriously runs. | Control signal failure; Temperature control sensing failure; Hot short in control wiring. | Indicating lights on MCC for fan motor running. | None. (See Remarks) | None. (See Remarks) | 1. Analysis shows that the single failure condition of a fan continuing to run, or spuriously running during accident conditions concurrent with minimum outside design temperature, is analyzed to conclude that the space temeratures remain within allowable limits. |

**Table 9.4-6 Failure Modes and Effects Analysis for Active Failures Subsystem: 480 V Shutdown Transformer Room Ventilation (Sheet 11 of 18)**

| ITEM NO. | COMPONENT IDENTIFICATION | FUNCTION | FAILURE MODE | POTENTIAL CAUSE | METHOD OF DETECTION | EFFECT ON SYSTEM | EFFECT ON PLANT | REMARKS |
|---|---|---|---|---|---|---|---|---|
| 11 | 2-FAN-30-250F-A<br><br>Exhaust Fan | Exhausts air from 480 V Transformer Room 2A. | Fails to run; Fails while running. | Mechanical failure; Train A power failure; Temperature control sensing failure; Control signal failure | Motor running light on MCC. | Loss of one safety related fan. | None. (See Remarks) | 1. The three (3) exhaust fans (3 safety-related) in 480 V Transformer Room 2A are interlocked to automatically start/stop in staged series by thermostatic control.<br><br>2. The inlet dampers are interlocked to automatically open when any fan is running.<br><br>3. Schematics have been reviewed and it was determined that rooms 2A and 2B, containing redundant electrical equipment, are independent of each other.<br><br>4. Room temperature is indicated on Local Panel L-368.<br><br>5. Two of the three safety-related fans are sufficient to adequately ventilate each 480V Transformer Room. |
| | | | Spuriously runs. | Control signal failure; Temperature control sensing failure; Hot short in control wiring. | Indicating lights on MCC for fan motor running. | None. (See Remarks) | None. (See Remarks) | 1. Analysis shows that the single failure condition of a fan continuing to run, or spuriously running during accident conditions concurrent with minimum outside design temperature, is analyzed to conclude that the space temeratures remain within allowable limits. |

**Table 9.4-6 Failure Modes and Effects Analysis for Active Failures Subsystem: 480 V Shutdown Transformer Room Ventilation (Sheet 12 of 18)**

| ITEM NO. | COMPONENT IDENTIFICATION | FUNCTION | FAILURE MODE | POTENTIAL CAUSE | METHOD OF DETECTION | EFFECT ON SYSTEM | EFFECT ON PLANT | REMARKS |
|---|---|---|---|---|---|---|---|---|
| 12 | 2-FAN-30-250G-B<br><br>Exhaust Fan | Exhausts are from 480 V Transformer Room 2A. | Fails to run; Fails while running. | Mechanical Failure; Train A power failure; Temperature control sensing failure; Control signal failure | Motor running light on MCC. | Loss of one safety related fan. | None. (See Remarks) | 1. The three (3) exhaust fans (3 safety-related) in 480 V Transformer Room 2A are interlocked to automatically start/stop in staged series by thermostatic control.<br><br>2. The inlet dampers are interlocked to automatically open when any fan is running.<br><br>3. Schematics have been reviewed and it was determined that rooms 2A and 2B, containing redundant electrical equipment, are independent of each other.<br><br>4. Room temperature is indicated on Local Panel L-368.<br><br>5. Two of the three safety-related fans are sufficient to adequately ventilate each 480V Transformer Room. |
| | | | Spuriously runs. | Control signal failure; Temperature control sensing failure; Hot short in control wiring. | Indicating lights on MCC for fan motor running. | None. (See Remarks) | None. (See Remarks) | 1. Analysis shows that the single failure condition of a fan continuing to run, or spuriously running during accident conditions concurrent with minimum outside design temperature, is analyzed to conclude that the space temeratures remain within allowable limits. |

**Table 9.4-6 Failure Modes and Effects Analysis for Active Failures Subsystem: 480 V Shutdown Transformer Room Ventilation (Sheet 13 of 18)**

| ITEM NO. | COMPONENT IDENTIFICATION | FUNCTION | FAILURE MODE | POTENTIAL CAUSE | METHOD OF DETECTION | EFFECT ON SYSTEM | EFFECT ON PLANT | REMARKS |
|---|---|---|---|---|---|---|---|---|
| 13 | 2-FAN-30-246F-B<br><br>Exhaust Fan | Exhausts air from 480 V Transformer Room 2B. | Fails to run; Fails while running. | Mechanical failure; Train B power failure; Temperature control sensing failure; Control signal failure | Motor running light on MCC. | Loss of one safety related fan. | None. (See Remarks) | 1. The four (4) exhaust fans (3 safety-related) in 480 V Transformer Room 2B are interlocked to automatically start/stop in staged series by thermostatic control.<br><br>2. The inlet dampers are interlocked to automatically open when any fan is running.<br><br>3. Schematics have been reviewed and it was determined that rooms 2A and 2B, containing redundant electrical equipment, are independent of each other.<br><br>4. Room temperature is indicated on Local Panel L-362.<br><br>5. Two of the three safety-related fans are sufficient to adequately ventilate each 480V Transformer Room. |
| | | | Spuriously runs. | Control signal failure; Temperature control sensing failure; Hot short in control wiring | Indicating lights on MCC for fan motor running. | None. (See Remarks) | None. (See Remarks) | 1. Analysis shows that the single failure condition of a fan continuing to run, or spuriously running during accident conditions concurrent with minimum outside design temperature, is analyzed to conclude that the space temeratures remain within allowable limits. |

**Table 9.4-6 Failure Modes and Effects Analysis for Active Failures Subsystem: 480 V Shutdown Transformer Room Ventilation (Sheet 14 of 18)**

| ITEM NO. | COMPONENT IDENTIFICATION | FUNCTION | FAILURE MODE | POTENTIAL CAUSE | METHOD OF DETECTION | EFFECT ON SYSTEM | EFFECT ON PLANT | REMARKS |
|---|---|---|---|---|---|---|---|---|
| 14 | 2-FAN-30-246G-B<br><br>Exhaust Fan | Exhausts air from 480 V Transformer Room 2B. | Fails to run; Fails while running. | Mechanical failure; Train B power failure; Temperature control sensing failure; Control signal failure | Motor running light on MCC. | Loss of one safety related fan. | None. (See Remarks) | 1. The four (4) exhaust fans (3 safety-related) in 480 V Transformer Room 2B are interlocked to automatically start/stop in staged series by thermostatic control.<br><br>2. The inlet dampers are interlocked to automatically open when any fan is running.<br><br>3. Schematics have been reviewed and it was determined that rooms 2A and 2B, containing redundant electrical equipment, are independent of each other.<br><br>4. Room temperature is indicated on Local Panel L-362.<br><br>5. Two of the three safety-related fans are sufficient to adequately ventilate each 480V Transformer Room. |
| | | | Spuriously runs. | Control signal failure; Temperature control sensing failure; Hot short in control wiring. | Indicating lights on MCC for fan motor running. | None. (See Remarks) | None. (See Remarks) | 1. Analysis shows that the single failure condition of a fan continuing to run, or spuriously running during accident conditions concurrent with minimum outside design temperature, is analyzed to conclude that the space temeratures remain within allowable limits. |

**Table 9.4-6 Failure Modes and Effects Analysis for Active Failures Subsystem: 480 V Shutdown Transformer Room Ventilation (Sheet 15 of 18)**

| ITEM NO. | COMPONENT IDENTIFICATION | FUNCTION | FAILURE MODE | POTENTIAL CAUSE | METHOD OF DETECTION | EFFECT ON SYSTEM | EFFECT ON PLANT | REMARKS |
|---|---|---|---|---|---|---|---|---|
| 15 | 2-FAN-30-246H-B<br><br>Exhaust Fan | Exhausts air from 480 V Transformer Room 2B. | Fails to run; Fails while running. | Mechanical failure; Train B power failure; Temperature control sensing failure; Control signal failure | Motor running light on MCC. | Loss of one safety related fan. | None. (See Remarks) | 1. The four (4) exhaust fans (3 safety-related) in 480 V Transformer Room 2B are interlocked to automatically start/stop in staged series by thermostatic control.<br><br>2. The inlet dampers are interlocked to automatically open when any fan is running.<br><br>3. Schematics have been reviewed and it was determined that rooms 2A and 2B, containing redundant electrical equipment, are independent of each other.<br><br>4. Room temperature is indicated on Local Panel L-362.<br><br>5. Two of the three safety-related fans are sufficient to adequately ventilate each 480V Transformer Room. |
| | | | Spuriously runs. | Control signal failure; Temperature control sensing failure; Hot short in control wiring. | Indicating lights on MCC for fan motor running. | None. (See Remarks) | None. (See Remarks) | 1. Analysis shows that the single failure condition of a fan continuing to run, or spuriously running during accident conditions concurrent with minimum outside design temperature, is analyzed to conclude that the space temeratures remain within allowable limits. |

**Table 9.4-6 Failure Modes and Effects Analysis for Active Failures Subsystem: 480 V Shutdown Transformer Room Ventilation (Sheet 16 of 18)**

| ITEM NO. | COMPONENT IDENTIFICATION | FUNCTION | FAILURE MODE | POTENTIAL CAUSE | METHOD OF DETECTION | EFFECT ON SYSTEM | EFFECT ON PLANT | REMARKS |
|---|---|---|---|---|---|---|---|---|
| 16 | 2-FAN-30-246J<br><br>Exhaust Fan (Non-safety) | Exhausts air from 480 V Transformer Room 2B | Spuriously runs. | Control signal failure; Temperature control sensing failure; Hot short in control wiring. | Indicating lights on MCC for fan motor running. | None.<br><br>See Remark #2. | None.<br><br>See Remark #2. | 1. This fan is electrically separate from the 1E circuit for the three safety-related fans.<br><br>2. The single failure condition of a fan continuing to run, or spuriously running during accident conditions concurrent with minimum outside design temperature, is analyzed to conclude that the space temeratures remain within allowable limits. |

**Table 9.4-6 Failure Modes and Effects Analysis for Active Failures Subsystem: 480 V Shutdown Transformer Room Ventilation (Sheet 17 of 18)**

| ITEM NO. | COMPONENT IDENTIFICATION | FUNCTION | FAILURE MODE | POTENTIAL CAUSE | METHOD OF DETECTION | EFFECT ON SYSTEM | EFFECT ON PLANT | REMARKS |
|---|---|---|---|---|---|---|---|---|
| 17 | 2-FCO-30-246A and -246B<br><br>Intake Dampers | Permits flow of air supply from air intake to 480 V Transformer Room 2B. | Spuriously closes; Fails to open. | Mechanical failure; Auto-open signal failure; Hot short in control wiring. | MCR indicating lights (2-ZS-30-246A and -246B). | Loss of redundancy in intake air supply.<br><br>100% redundant intake damper can supply sufficient air. | None.<br><br>See Remark #3. | 1. Both intake dampers are interlocked to automatically open when any of the four (4) exhaust fans are either automatically or manually started.<br><br>2. Dampers fail open upon loss of control air or Train B power to 2-FSV-30-246A and -246B.<br><br>3. 2-FSV-30-246A and -246B and the air pressure regulators, 1-PREG-30-246A and -246B, that regulate the air pressure to these FSVs are Q-Listed as Quality- related, not safety-related.<br><br>Failure of the air regulators either by blockage or sticking full open will not impact the capability of the damper to open.<br><br>Failure of the solenoid to de-energize to close the damper is included in the mechanical failure mode of the damper.<br><br>The nonsafety-related solenoid is properly isolated in the 1E circuit. |

**Table 9.4-6 Failure Modes and Effects Analysis for Active Failures Subsystem: 480 V Shutdown Transformer Room Ventilation (Sheet 18 of 18)**

| ITEM NO. | COMPONENT IDENTIFICATION | FUNCTION | FAILURE MODE | POTENTIAL CAUSE | METHOD OF DETECTION | EFFECT ON SYSTEM | EFFECT ON PLANT | REMARKS |
|---|---|---|---|---|---|---|---|---|
| 18 | 2-FCO-30-250A and -250B<br><br>Intake Dampers. | Permits flow of air supply from air intake to 480V Transformer Room 2A. | Spuriously closes: Fails to open. | Mechanical failure; Auto-open signal failure; Hot short in control wiring. | MCR indicating lights (2-ZS-30-250A and -250B). | Loss of redundancy in intake air supply.<br><br>100% redundant intake damper can supply sufficient air. | None.<br><br>(See Remark #3) | 1. Both intake dampers are interlocked to automatically open when any of the three (3) exhaust fans are either automatically or manually started.<br><br>2. Dampers fail open upon loss of control air or Train A power to 1-FSV-30-250A and -250B.<br><br>3. 1-FSV-30-250A and -250B and the air pressure regulators, 1-PREG-30-250A and -250B, that regulate the air pressure to these FSVs are Q-Listed as Quality- related, not safety-related.<br><br>Failure of the air regulators either by blockage or sticking full open will not impact the capability of the damper to open.<br><br>Failure of the solenoid to de-energize to close the damper is included in the mechanical failure mode of the damper.<br><br>The nonsafety-related solenoid is properly isolated in the 1E circuit. |

**Table 9.4-7 Failure Modes and Effects Analysis Control Building HVAC (Sheet 1 of 52)**

| ITEM NO. | COMPONENT IDENTIFICATION | FUNCTION | FAILURE MODE | POTENTIAL CAUSE | METHOD OF FAILURE DETECTION | EFFECT ON SYSTEM | EFFECT ON PLANT | REMARKS |
|---|---|---|---|---|---|---|---|---|
| 1A | Tornado Damper 0-FCO-31-32 | Isolation of Train A supply air normal (west) intake during tornado event | Fails to close during tornado event | -Mechanical failure<br>-Electrical failure | Status indication in Control Room via Limit Switch ZS-31-32 | None. (See remarks.) | None. (See remarks) | Redundant Train B Tornado Damper 0-FCO-31-33 powered from Train B and installed in series accomplished isolation during tornado event |
| 1B | Tornado Damper 0-FCO-31-34 | Isolation of Train B supply air normal (west) intake during tornado event | Fails to close during tornado event | -Mechanical failure<br>-Electrical failure | Status indication in Control Room on Panel 1-M-9 via Limit Switch ZS-31-34. | None. (See remarks.) | None. (See remarks) | Redundant Train B Tornado Damper 0-FCO-31-35 powered from Train B and installed in series accomplished isolation during tornado event |
| | | | Spuriously closes | Mechanical failure<br>-Electrical failure | Status indication in Control Room via Limit Switch ZS–31-32 | None. (See remarks.) | None. (See remarks) | Operator removes power from damper, during non-tornado operation, to prevent spurious closure. |
| 2A | Tornado Damper 0-FCO-31-33 | Isolation of Train A supply air normal (west) intake during tornado event | Fails to close during tornado event | -Mechanical failure<br>-Electrical failure | Status indication in Control Room on Panel 1-M-9 via Limit Switch ZS-31-33 | None. (See remarks.) | None. (See remarks) | Redundant Train A Tornado Damper 0-FCO-31-32 powered from Train A and installed in series accomplished isolation during tornado event |
| 2B | Tornado Damper 0-FCO-31-35 | Isolation of Train B supply air normal (west) intake during tornado event | Fails to close during tornado event | -Mechanical failure<br>-Electrical failure | Status indication in Control Room on Panel 1-M-9 via Limit Switch ZS-31-35 | None. (See remarks) | None. (See remarks) | Redundant Train A Tornado Damper 0-FCO-31-34 powered from Train A and installed in series accomplished isolation during tornado event |
| 3A | Isolation Damper 0-FCO-31-1 | See remarks | See remarks | See remarks | See remarks | See remarks | See remarks | This isolation damper all controls are disconnected and the damper is locked in fully open position |
| 3B | Isolation Damper 0-FCO-31-2 | See remarks | See remarks | See remarks | See remarks | See remarks | See remarks | This isolation damper all controls are disconnected and the damper is locked in fully open position |

**Table 9.4-7 Failure Modes and Effects Analysis Control Building HVAC (Sheet 2 of 52)**

| ITEM NO. | COMPONENT IDENTIFICATION | FUNCTION | FAILURE MODE | POTENTIAL CAUSE | METHOD OF FAILURE DETECTION | EFFECT ON SYSTEM | EFFECT ON PLANT | REMARKS |
|---|---|---|---|---|---|---|---|---|
| 4A | Flow Control Damper 0-FCO-31-1A | See remarks | See remarks | See remarks | See remarks | See remarks | See remarks | This flow control damper all controls are disconnected and the damper is locked in fully open position |
| 4B | Flow Control Damper 0-FCO-31-2A | See remarks | See remarks | See remarks | See remarks | See remarks | See remarks | This flow control damper all controls are disconnected and the damper is locked in fully open position |
| 5A | Pressurization Fan A-A | See remarks | See remarks | See remarks | See remarks | See remarks | See remarks | This pressurization fan is disconnected and abandoned in place |
| 5B | Pressurization Fan B-B | See remarks | See remarks | See remarks | See remarks | See remarks | See remarks | This pressurization fan is disconnected and abandoned in place |
| 6A | Backdraft Damper 0-31-2097 | See remarks | See remarks | See remarks | See remarks | See remarks | See remarks | This backdraft damper is locked in open position |
| 6B | Backdraft Damper 0-31-2098 | See remarks | See remarks | See remarks | See remarks | See remarks | See remarks | This backdraft damper is locked in open position |
| 7 | Isolation Valve 0-FCV-31-3 | Isolates Main Control Room Habitability Zone (MCRHZ) from outside makeup air supply | Open (during CRI) | -Mechanical failure<br>-Control failure | Status indication in Control Room Panel 1-M-9 via Limit Switch ZS-31-3 | None<br>See Remarks | None. See remarks | Redundant safety Train B Isolation Valve installed in series will close to provide isolation |
| 8 | Isolation Valve 0-FCV-31-4 | Isolates MCRHZ from outside makeup air supply | Open (during CRI) | -Mechanical failure<br>-Control failure | Status indication in Control Room Panel 1-M-9 via Limit Switch ZS-31-4 | None<br>(See Remarks) | None. See remarks | Redundant safety Train A Isolation Valve installed in series will close to provide isolation |

**Table 9.4-7 Failure Modes and Effects Analysis Control Building HVAC (Sheet 3 of 52)**

| ITEM NO. | COMPONENT IDENTIFICATION | FUNCTION | FAILURE MODE | POTENTIAL CAUSE | METHOD OF FAILURE DETECTION | EFFECT ON SYSTEM | EFFECT ON PLANT | REMARKS |
|---|---|---|---|---|---|---|---|---|
| 9 | Fire Damper 0-ISD-31-3934 | To maintain fire barrier integrity between Mechanical Equip. Room Floor El 755.0' and Spreading Room El. 729.0' during fire | Open during fire (see remarks | -Mechanical | See remarks | See remarks | See remarks | Single failures of HVAC system need not be postulated as being concurrent with fire |
| | | | Fusible link failure (see remarks) | --Mechanical (fusible link failure) | Surveillance and Maintenance (see remarks) | None (see remarks) | None (see remarks) | Fire damper has dual fusible links |
| 10 | Isolation Valve 0-FCV-31-37 | See remarks | See remarks | See remarks | See remarks | See remarks | See remarks | This valve controls are disconnected |
| 11 | Isolation Valve 0-FCV-31-36 | See remarks | See remarks | See remarks | See remarks | See remarks | See remarks | This valve controls are disconnected |
| 11A | Isolation Damper 0-FCO-31-19 | See remarks | See remarks | See remarks | See remarks | See remarks | See remarks | The damper controls are disconnected, and the duct is blanked off |
| 11B | Isolation Damper 0-FCO-31-20 | See remarks | See remarks | See remarks | See remarks | See remarks | See remarks | The damper controls are disconnected, and the duct is blanked off |
| 12 | Fire Damper 0-ISD-31-3938 | To maintain fire barrier integrity between Spreading Room El. 729.0' & Unit 1 Aux. Instr. Room El. 708.0' during fire | Open during fire (see remarks) | -Mechanical | See remarks | See remarks | See remarks | Single failures of HVAC system need not to be postulated as being concurrent with fire |
| | | | Fusible link failure (see remarks) | -Mechanical (fusible link failure) | Surveillance and Maintenance | None. (See remarks) | None (see remarks) | Additional independent fusible link is to be installed |

**Table 9.4-7 Failure Modes and Effects Analysis Control Building HVAC (Sheet 4 of 52)**

| ITEM NO. | COMPONENT IDENTIFICATION | FUNCTION | FAILURE MODE | POTENTIAL CAUSE | METHOD OF FAILURE DETECTION | EFFECT ON SYSTEM | EFFECT ON PLANT | REMARKS |
|---|---|---|---|---|---|---|---|---|
| 12A | 0-XS-31-179 | To detect smoke in the Control Building Pressurization Fan Intake | Spurious actuation of smoke detector | -Electrical failure | Surveillance<br>Annunciation in MCR of CRI signal | See remarks | None (see remarks) | Upon activation of air intake smoke detectors a CRI is initiated. Operator action will determine if the smoke detector activation was spurious and if so return system to normal operation |
| | | | Failure to detect valid smoke | -Electrical failure | Smoke detectors in MCRHZ | Abandon MCR | None. Use Auxiliary Control Room | |
| 12B | 0-XS-31-183 | To detect smoke in the Control Building Pressurization Fan Intake | Spurious actuation of smoke detector | -Electrical failure | Surveillance<br>Annunciation in MCR of CRI signal | See remarks | None (see remarks) | Upon activation of air intake smoke detectors a CRI is initiated. Operator action will determine if the smoke detector activation was spurious and if so return system to normal operation |
| | | | Failure to detect valid smoke | -Electrical failure | Smoke detectors in MCRHZ | Abandon MCR | None. Use Auxiliary Control Room | |
| 13 | Fire Damper 0-ISD-31-3931 | Maintain fire barrier between Control Bldg. roof and Main Control Room in case of fire on the roof at the east emergency air intake | Open during fire (see remarks | See remarks | See remarks | See remarks | None. (See remarks) | Single failures of HVAC system need not to be postulated as being concurrent with fire |
| | | | Closed during CRI | -Mechanical (fusible link) | Loss of Control Room Press. Diff. Common Alarm through switches 0-PDS-31-1B, -2B, 3B & -4B in Control Room | Loss of Control Room pressurization due to loss of emergency press. fan air flow path through east emerg. air intake | None. (See remarks) | Control Bldg. Press. Diff. switches 0-PDS-31-1A, 2A, -3A & -4A start redundant Control Bldg. emergency press. fan A-A with its outdoor air intake (west) |

**Table 9.4-7 Failure Modes and Effects Analysis Control Building HVAC (Sheet 5 of 52)**

| ITEM NO. | COMPONENT IDENTIFICATION | FUNCTION | FAILURE MODE | POTENTIAL CAUSE | METHOD OF FAILURE DETECTION | EFFECT ON SYSTEM | EFFECT ON PLANT | REMARKS |
|---|---|---|---|---|---|---|---|---|
| 14 | Tornado Damper 0-FCO-31-21 | Isolation of emergency outdoor air intake for Emergency Press Fan B-B during Tornado Event | Fails to close during Tornado Event | -Mechanical failure<br>-Electrical failure | Status indication via Limit Switch ZS-31-21 | None. (See remarks) | None. (See remarks) | Redundant Train B Tornado Damper 0-FCO-31-22 powered from Train B and installed in series accomplishes isolation during Tornado Event |
| | | | Spuriously closes | -Electrical failure | Annunciation in MCR on loss of +1/8” w.g. pressure | Momentary loss of MCRHZ pressurization | None. Use redundant air intake | Operator removes power from damper, during non-tornado operation, to prevent spurious closure |
| 15 | Tornado Damper 0-FCO-31-22 | Isolation of east emergency outdoor air intake for Emergency Press Fan B-B during Tornado Event | Fails to close during Tornado Event | -Mechanical failure<br>-Electrical failure | Status indication via Limit Switch ZS-31-22 | None. (See remarks) | None. (See remarks) | Redundant Train A Tornado Damper 0-FCO-31-21 powered from Train A and installed in series accomplishes isolation during Tornado Event |
| 16B | Isolation Damper 0-FCV-31-6 | Isolates Emergency Pressurization Fan A-A from normal outdoor air intake (west) supply air | Closes during Emerg. Press. fan A-A operation | -Mechanical failure.<br>-Electrical & aux. control air failure | The Loss of Control Room Press. Diff. Common Alarm through switches 0-PDS-31-1A, -2A, -3A & -4A and status indication in Control Room on Panel 1-M-9 via Limit Switch ZS-31-6 | Loss of air flow through Emerg. Press. Fan A-A | None (see remarks) | Redundant Train B emerg. press. Fan B-B starts upon signal from the Control Room Press. Diff. switches 0-PDS-31-1B, -2B, -3B and -4B |
| | | | Fails to close during standby operation | -Mechanical failure | The Loss of Control Room Press. Diff. Common Alarm through switches 0-PDS-31-1A, -2A, 3A & -4A and status indication in Control Room on Panel 1-M-9 via Limit Switch ZS-31-6 | May reduce the outside air supply and cause loss of pressurization | None (see remarks) | Same as above |

**Table 9.4-7 Failure Modes and Effects Analysis Control Building HVAC (Sheet 6 of 52)**

| ITEM NO. | COMPONENT IDENTIFICATION | FUNCTION | FAILURE MODE | POTENTIAL CAUSE | METHOD OF FAILURE DETECTION | EFFECT ON SYSTEM | EFFECT ON PLANT | REMARKS |
|---|---|---|---|---|---|---|---|---|
| 16A | Isolation Damper 0-FCV-31-5 | Isolates Emerg. Pressurization Fan B-B from emerg. outdoor air intake (east) supply air | Closes during Emerg. Press. Fan B-B operation | -Mechanical failure.<br>-Electrical & aux. control air failure | The Loss of Control Room Press. Diff. Common Alarm through switches 0-PDS-31-1B, -2B, -3B & -4B and status indication in Control Room on Panel 1-M-9 via Limit Switch ZS-31-5 | Loss of air flow through Emerg. Press. Fan B-B | None (see remarks) | Redundant Train A emerg. press. Fan A-A starts upon signal from the Control Room Press. Diff. switches 0-PDS-31-1A, -2A, -3A and -4A |
| | | | Fails to close during standby operation | -Mechanical failure | The Loss of Control Room Press. Diff. Common Alarm through switches 0-PDS-31-1B, -2B, 3B & -4B and status indication in Control Room via Limit Switch ZS-31-5 | May reduce the outside air supply and cause loss of pressurization | None (see remarks) | Same as above |
| 17B | Control Bldg. Emergency Air Press. Fan A-A | Pressurize Main Control Room Habitability Zone (MCRHZ) during CRI | -Fail to start<br>-Stops | -Mechanical failure<br>-Electric failure<br>-Control failure | The Loss of Control Room Press. Diff. Common Alarm through Switches 0-PDS-31-1A, -2A, 3A & -4A in Control Room | Loss of Control Room pressurization due to loss of air flow path through Train A | None. (See remarks) | The Control Room Press. Diff. Switches 0-PDS-31-1B, -2B, -3B and -4B start the Control Bldg. redundant Train B Emergency Air Press. Fan B-B |
| 17A | Control Bldg. Emergency Air Press. Fan B-B | Pressurize Main Control Room Habitability Zone (MCRHZ) during CRI | -Fails to start<br>-Stops | -Mechanical failure<br>-Electrical failure<br>-Control failure | The Loss of Control Room Press. Diff. Common Alarm through switches 0-PDS-31-1B, -2B, 3B and 4B in Control Room | Loss of Control Room pressurization due to loss of air flow path through Train B | None. (See remarks) | The Control Room Press. Diff. Switches 0-PDS-31-1A, -2B, -3A and -4A start the Control Bldg. redundant Train A Emergency Air Press. Fan A-A |

**Table 9.4-7 Failure Modes and Effects Analysis Control Building HVAC (Sheet 7 of 52)**

| ITEM NO. | COMPONENT IDENTIFICATION | FUNCTION | FAILURE MODE | POTENTIAL CAUSE | METHOD OF FAILURE DETECTION | EFFECT ON SYSTEM | EFFECT ON PLANT | REMARKS |
|---|---|---|---|---|---|---|---|---|
| 18A | Fire Damper 0-ISD-31-4608 | To prevent a fire or smoke from entering the Control Bldg. Emergency Air Cleanup Unit A-A | Open during fire | -Mechanical failure | See remarks | See remarks | See remarks | Single failures of HVAC system need not be postulated as being concurrent with fire |
| | | | Closed during CRI | -Mechanical failure (fusible link) | Loss of Control Room Press. Diff. Common Alarm through Switches 0-PDS-31-1A, -2A, 3A & -4A in Control Room | Loss of air flow through the Train A Air Cleanup Unit and loss of MCR pressurization | None. (See remarks) | The Control Room Press. Diff. Switches 0-PDS-31-1B, -2B, -3B and -4B start redundant Train B Air Cleanup Unit with its Fan B-B. (Existing dual fusible link is left in place) |
| 18B | Fire Damper 0-ISD-31-3958 | To prevent a fire or smoke from entering the Control Bldg. Emergency Air Cleanup Unit B-B | Open during fire | -Mechanical failure | See remarks | See remarks | See remarks | Single failures of HVAC system need not be postulated as being concurrent with fire |
| | | | Closed during CRI | -Mechanical failure (fusible link) | Loss of Control Room Press. Diff. Common Alarm through Switches 0-PDS-31-1B, -2B, -3B & -4B | Loss of air flow through the Train B Air Cleanup Unit and loss of MCR pressurization | None. (See remarks) | The Control Room Press. Diff. Switches 0-PDS-31-1A, -2A, -3A and -4A start redundant Train A Air Cleanup Unit with its Fan A-A. (Existing dual fusible link is left in place) |

**Table 9.4-7 Failure Modes and Effects Analysis Control Building HVAC (Sheet 8 of 52)**

| ITEM NO. | COMPONENT IDENTIFICATION | FUNCTION | FAILURE MODE | POTENTIAL CAUSE | METHOD OF FAILURE DETECTION | EFFECT ON SYSTEM | EFFECT ON PLANT | REMARKS |
|---|---|---|---|---|---|---|---|---|
| 19A | Isolation Damper FCO-31-8 | Isolation of Emergency Air Cleanup Unit A-A | Closed during operation of Emergency Air Cleanup Unit Fan A-A | -Mechanical failure<br>-Electrical & Aux Control Air Failure | In Control Room Loss of Control Room Press. Diff. Common Alarm through Switches 0-PDS-31-1A, -2A, -3A and -4A and Damper Status Indication via Limit Switch ZS-31-8 | Loss of air flow path for Emergency Air Cleanup Unit Fan A-A and loss of MCR pressurization | None. (See remarks) | The Control Room Press. Diff. Switches 0-PDS-31-1B, -2B, -3B and -4B start redundant Train B Fan B-B with its emerg. air cleanup unit |
| | | | Open during standby | -Mechanical failure<br>-Electrical failure | Damper Status Indication via Limit Switch ZS-31-8 | Air flow path is open through Air Cleanup Unit during standby | None. (See remarks) | Pressurization Air is still adequately filtered and Control Room Pressurization is still maintained |
| 19B | Isolation Damper FCO-31-7 | Isolation of Emergency Air Cleanup Unit B-B | Closed during operation of Emergency Air Cleanup Unit Fan B-B | -Mechanical failure.<br>-Electrical & Aux Control Air Failure | In Control Room Loss of Control Room Press. Diff. Common Alarm through Switches 0-PDS-31-1B, -2B, -3B and -4B and Damper Status Indication via Limit Switch ZS-31-7 | Loss of air flow path for Emergency Air Cleanup Unit Fan B-B and loss of MCR pressurization | None (See remarks) | The Control Room Press. Diff. Switches 0-PDS-31-1A, -2A, -3A and -4A start the Control Bldg. redundant Train A Fan A-A with its emerg. air cleanup unit |
| | | | Open during standby | -Mechanical failure<br>-Electrical failure | Damper Status Indication via Limit Switch ZS-31-7 | Air flow path is open through Air Cleanup Unit during standby | None (See remarks) | Pressurization Air is still adequately filtered and Control Room Pressurization is still maintained |
| 20A | Control Bldg. Emergency Air Cleanup Unit A-A | Filters potentially contaminated outside air prior to MCRHZ during CRI | Blocked | -Dirty filters | Loss of Control Room Press. Diff. common Alarm through Switches 0-PDS-31-1A, -2A, -3A, and -4A | Reduced or no air flow through emergency air cleanup unit and loss of MCR pressurization | None.<br>(See Remarks) | Control Room Press. Diff. Switches 0-PDS-31-1B, -2B, -3B and -4B start redundant Train B Emerg. Air Cleanup Unit Fan B-B |

**Table 9.4-7 Failure Modes and Effects Analysis Control Building HVAC (Sheet 9 of 52)**

| ITEM NO. | COMPONENT IDENTIFICATION | FUNCTION | FAILURE MODE | POTENTIAL CAUSE | METHOD OF FAILURE DETECTION | EFFECT ON SYSTEM | EFFECT ON PLANT | REMARKS |
|---|---|---|---|---|---|---|---|---|
| 20B | Control Bldg. Emergency Air Cleanup Unit B-B | Filters potentially contaminated outside air prior to introducing it into MCRHZ during CRI | Blocked | -Dirty filters | Loss of Control Room Press. Diff. common Alarm through Switches 0-PDS-31-1B, -2B, -3B, and -4B | Reduced or no air flow through emergency air cleanup unit and loss of MCR pressurization | None. (See remarks) | Control Room Press. Diff. Switches 0-PDS-31-1A, -2A, -3A and -4A start redundant Train A Emerg. Air Cleanup Unit Fan A-A |
| 21A | Control Bldg. Emergency Air Cleanup Unit Fan A-A | Draws recirc. and outside air through air cleanup unit during CRI | -Fails to start<br>-Stops | -Mechanical failure<br>-Electrical failure | Loss of Control Room Press. Diff. common Alarm through Switches 0-PDS-31-1A, -2A, -3A, and -4A | Loss of air flow path through Train A and loss of MCR pressurization | None. (See remarks) | Control Room Press. Diff. Switches 0-PDS-31-1B, -2B, -3B and -4B start redundant Train B Emerg. Air Cleanup Unit Fan B-B |
| 21B | Control Bldg. Emergency Air Cleanup Unit Fan B-B | Draws recirc. and outside air through air cleanup unit during CRI | -Fails to start<br>-Stops | -Mechanical failure<br>-Electrical failure | Loss of Control Room Press. Diff. common Alarm through Switches 0-PDS-31-1B, -2B, -3B, and -4B | Loss of air flow path through Train B and loss of MCR pressurization | None. (See remarks) | Control Room Press. Diff. Switches 0-PDS-31-1A, -2A, -3A and -4A start redundant Train A Emerg. Air Cleanup Unit Fan A-A |

**Table 9.4-7 Failure Modes and Effects Analysis Control Building HVAC (Sheet 10 of 52)**

| ITEM NO. | COMPONENT IDENTIFICATION | FUNCTION | FAILURE MODE | POTENTIAL CAUSE | METHOD OF FAILURE DETECTION | EFFECT ON SYSTEM | EFFECT ON PLANT | REMARKS |
|---|---|---|---|---|---|---|---|---|
| 22A | Fire Damper 0-ISD-31-3935 | Fire barrier at the Control Bldg. Emerg. Air Cleanup Unit (ACU) Fan A-A discharge. (Prevents fire spreading downstream of the Fan A-A) | Open during fire | -Mechanical failure | See remarks | See remarks | See remarks | Single failure of HVAC system need not be postulated as being concurrent with fire |
| | | | Closed during CRI | -Mechanical failure. (fusible link) | The Loss of Control Room Press. Diff. Common Alarm through Switches 0-PDS-31-1A, -2A, -3A, and -4A | Loss of air flow through the Train A ACU and loss of MCR pressurization | None. (See remarks) | The Control Room Press. Diff. Switches 0-PDS-31-1B, -2B, -3B, and -4B start Redundant Train B Emerg. Air Cleanup Unit with its Fan B-B |
| 22B | Fire Damper 0-ISD-31-3936 | Fire barrier at the Control Bldg. Emerg. Air Cleanup Unit (ACU) Fan B-B discharge. (Prevents fire spreading downstream of the Fan B-B) | Open during fire | -Mechanical failure | See remarks | See remarks | See remarks | Single failure of HVAC system need not be postulated as being concurrent with fire |
| | | | Closed during CRI | -Mechanical failure (fusible link) | The Loss of Control Room Press. Diff. Common Alarm through Switches 0-PDS-31-1B, -2B, -3B, and -4B | Loss of air flow through the Train B ACU and loss of MCR pressurization | None. (See remarks) | The Control Room Press. Diff. Switches 0-PDS-31-1A, -2A, -3A, and -4B start Redundant Train A Emerg. Air Cleanup Unit with its Fan A-A |

**Table 9.4-7 Failure Modes and Effects Analysis Control Building HVAC (Sheet 11 of 52)**

| ITEM NO. | COMPONENT IDENTIFICATION | FUNCTION | FAILURE MODE | POTENTIAL CAUSE | METHOD OF FAILURE DETECTION | EFFECT ON SYSTEM | EFFECT ON PLANT | REMARKS |
|---|---|---|---|---|---|---|---|---|
| 23 | Fire Damper 0-XFD-31-75 | Fire barrier between Conference Room and Technical Support Center | Open during fire | -Mechanical failure<br>-Electrical failure | See remarks | See remarks | See remarks | Single failures of HVAC system need not be postulated as being concurrent with fire |
| | | | Close during other modes of operation | -ETL Link failure | Surveillance and Maintenance | May result in overheating of Technical Support Center | None (see remarks) | These areas are not essential for safe shutdown |
| 24 | Fire Damper 0-XFD-31-83 | Fire barrier between Relay Room and Main Control Room | Open during fire | -Mechanical failure<br>-Electrical failure | See Remarks | See Remarks | See remarks | Single failures of HVAC system need not be postulated as being concurrent with fire |
| | | | Close during other modes of operation | -ETL Link failure | Surveillance and Maintenance | None. (See remarks) | None. (See remarks) | The transfer opening with fire Damper 0-XFD-31-153 provides alternate return air flow path |
| 25 | Fire Damper 0-XFD-31-153 | Fire barrier between Relay Room and Main Control Room | Open during fire | -Mechanical failure<br>-Electrical failure | See Remarks | See Remarks | See remarks | Single failures of HVAC system need not be postulated as being concurrent with fire. |
| | | | Close during other modes of operation | -ETL Link failure | Surveillance and Maintenance | None. (See remarks) | None. (See remarks) | This fire damper has two ETL |

**Table 9.4-7 Failure Modes and Effects Analysis Control Building HVAC (Sheet 12 of 52)**

| ITEM NO. | COMPONENT IDENTIFICATION | FUNCTION | FAILURE MODE | POTENTIAL CAUSE | METHOD OF FAILURE DETECTION | EFFECT ON SYSTEM | EFFECT ON PLANT | REMARKS |
|---|---|---|---|---|---|---|---|---|
| 26 | Fire Damper 0-XFD-31-99 | To prevent smoke or fire from the Shift Eng Office and Conference Room from being introduced into the air recirculation system. | Open during fire. | -Mechanical failure<br>-Electrical failure | See remarks. | See remarks. | See remarks. | Single failure of HVAC system need not be postulated as being concurrent with fire. |
| | | | Closed during other modes of operation. | -ETL link failure. | Surveillance and Maintenance. | May result in overheating of Shift Eng Office and Conference Room. | None. (See remarks). | These areas are not essential for safe shutdown. |
| 27A | Isolation Damper 0-FCO-31-12 | Isolate Main Control Room (MCR) Air Handling Unit (AHU) A-A during standby or maintenance. | Close during Air Handling Unit A-A operation. | -Mechanical failure<br>-Electrical failure | Annunciation in MCR of MCR Air Conditioning Safety train switchover, via Switches 0–PDS–31–161, 0–FS–31-84 & 0–TS–31–88B | Loss of air flow path through AHU A-A. | None (see remarks). | Redundant AHU B-B starts on low air flow signal from AHU A-A via Flow Switch FS-31-84. |
| | | | Open during standby operation. | -Mechanical failure<br>-Electrical &<br>-Auxiliary Control Air Failure | | | None (see remarks). | Backdraft Damper 0-31-2105 prevents backflow. |

**Table 9.4-7 Failure Modes and Effects Analysis Control Building HVAC (Sheet 13 of 52)**

| ITEM NO. | COMPONENT IDENTIFICATION | FUNCTION | FAILURE MODE | POTENTIAL CAUSE | METHOD OF FAILURE DETECTION | EFFECT ON SYSTEM | EFFECT ON PLANT | REMARKS |
|---|---|---|---|---|---|---|---|---|
| 27B | Isolation Damper 0-FCO-31-11 | Isolate Main Control Room (MCR) Air Handling Unit (AHU) B-B during standby or maintenance. | Close during Air Handling Unit B-B operation. | -Mechanical failure<br>-Electrical failure | Annunciation in MCR of MCR Air Conditioning Safety train switchover via Switches 0-PDS-31-186, 0-FS-31-94 & 0-TS-31-89B | Loss of air flow path through AHU B-B. | None (see remarks). | Redundant AHU A-A starts on low air flow signal from AHU A-A via Flow Switch FS-31-94. |
| | | | Open during standby operation. | -Mechanical failure<br>-Electrical &<br>-Auxiliary Control Air Failure | | None (see remarks). | None (see remarks). | Backdraft Damper 0-31-2104 prevents backflow. |
| 28A | Modulating Damper 0-FCO-31-82 | Modulates the air flow through cooling coil and bypass to maintain the temperature at thermostat 0-TE-31-82 setpoint. | Closed (coil section). | -Mechanical failure<br>-Control Air failure | Annunciation in MCR of MCR Air Conditioning Safety train switchover via Switches 0-PDS-31-161, 0-FS-31-84 & 0-TS-31-88B | Air bypasses the cooling coil and increase of space temperature. | None (see remarks). | Temp. Switch TS-31-88B starts the redundant AHU B-B upon high return temp. |
| | | | Spurious modulation. | -Control failure | | Space temperature is not maintained at thermostat setting. | None (see remarks). | Temp. Switch TS-31-88B starts the redundant AHU B-B upon high return temp. |

**Table 9.4-7 Failure Modes and Effects Analysis Control Building HVAC (Sheet 14 of 52)**

| ITEM NO. | COMPONENT IDENTIFICATION | FUNCTION | FAILURE MODE | POTENTIAL CAUSE | METHOD OF FAILURE DETECTION | EFFECT ON SYSTEM | EFFECT ON PLANT | REMARKS |
|---|---|---|---|---|---|---|---|---|
| 28B | Modulating Damper 0-FC0-31-91 | Modulates the air flow through cooling coil and bypass to maintain the temperature at thermostat 0-TE-31-91 setpoint. | Closed (coil section). | -Mechanical failure<br>-Control Air failure | Annunciation in MCR of MCR Air Conditioning Safety train switchover via Switches 0-PDS-31-186, 0-FS-31-94 & 0-TS-31-89B | Air bypasses the cooling coil and increase of space temperature. | None (see remarks). | Temp. Switch TS-31-89B starts the redundant AHU A-A upon high return temp. |
| | | | Spurious modulation. | -Control failure | | Space temperature is not maintained at thermostat setting. | None (see remarks). | Temp. Switch TS-31-89B starts the redundant AHU A-A upon high return temp. |
| 29A | Main Control Room Air Handling Unit A-A | | | | | | | |
| | -Filter | Filters the air | Clogged | - Accumulation of dirt | Surveillance (PDI-31-87) and Maintenance and Annunciation in MCR Air Conditioning Safety Train Switchover via Switches 0-PDIS-31-161, 0-FS-31-84 & 0-TS-31-88B | Reduced Air flow may result in rise of space temperature | None. (See Remarks) | Surveillancce (PDI-31-87) & Maintenance of filters in accordance with maintenance procedures. Either Temp. Switch 0-TS-31-88B or Flow Switch 0-FS-31-84 starts redundant Air Handling Unit B-B |
| | -Cooling Coil | Cools the supply air to maintain design temperature in the MCRHZ | Cooling coil tube break or crack | -Mechanical failure | Annunciation in MCR Air conditioning Safety Train Switchover via Switches 0-PDIS-31-161, 0-FS-31-84 & 0-TS-31-88B | Temperature increase in the MCRHZ | None. (See Remarks) | Redundant AHU B-B starts upon signal from AHU A-A high temperature switch 0-TS-31-88B |

**Table 9.4-7 Failure Modes and Effects Analysis Control Building HVAC (Sheet 15 of 52)**

| ITEM NO. | COMPONENT IDENTIFICATION | FUNCTION | FAILURE MODE | POTENTIAL CAUSE | METHOD OF FAILURE DETECTION | EFFECT ON SYSTEM | EFFECT ON PLANT | REMARKS |
|---|---|---|---|---|---|---|---|---|
| | -Humidifier | Provides moisture to maintain the design relative humidity in MCRHZ during normal operation mode | No humidification | -Steam Boiler failure<br>-Steam Control Valve closes<br>-Mechanical failure<br>-Electrical failure<br>-Mechanical failure<br>-Electrical failure | Moisure Indicator MI-31-176 on Panel L-529 | Decrease of Relative Humidity | None. (See Remarks) | Maintenance of the relative humidity is not required for safe shutdown of plant |
| | | | Humidification Control Valve fails open | | Moisture Indicator MI-31-176 on Panel L-529 | None. (See Remarks) | None. (See Remarks) | MCR moisture level will not exceed design requirements |

**Table 9.4-7 Failure Modes and Effects Analysis Control Building HVAC (Sheet 16 of 52)**

| ITEM NO. | COMPONENT IDENTIFICATION | FUNCTION | FAILURE MODE | POTENTIAL CAUSE | METHOD OF FAILURE DETECTION | EFFECT ON SYSTEM | EFFECT ON PLANT | REMARKS |
|---|---|---|---|---|---|---|---|---|
| 29A Cont | -Fan | Circulates the air | -Fails to start<br>-Stops | -Mechanical failure<br>-Electrical failure | Annunciation in MCR of MCR Air conditioning Safety Train Switchover via Switches 0-PDIS-31-161, 0-FS-31-84 & 0-TS-31-88B | Loss of air flow through AHU A–A | None. (See Remarks) | Redundant AHU B-B starts upon signal from AHU A-A Air flow Switch FS-31-84 |
| | | | Fails to stop or, starts | -Electrical failure | Annunciation in MCR of MCR Air conditioning Safety Train Switchover via Switches 0-PDIS-31-161, 0-FS-31-84 & 0-TS-31-88B | Increased pressure in duct | None. (See Remarks) | When both AHUs are operating the common ductwork static pressure does not exceed 6 inches wg safety-related duct design pressure |
| 29B | Main Control Room Air Handling Unit B-B | | | | | | | |
| | -Filter | Filters the air | Clogged | - Accumulation of dirt | Surveillance (PDI-31-97) and Maintenance and Annunciation in MCR Air Conditioning Safety Train Switchover via Switches 0-PDIS-31-186, 0-FS-31-94 & 0-TS-31-89B | Reduced Air flow may result in rise of space temperature | None. (See Remarks) | Surveillancce (PDI-31-97) & Maintenance of filters in accordance with maintenance procedures. Either Temp. Switch 0-TS-31-89B or Flow Switch 0-FS-31-94 starts redundant Air Handling Unit A-A |
| | -Cooling Coil | Cools the supply air to maintain design temperature in the MCRHZ | Cooling coil tube break or crack | -Mechanical failure | Annunciation in MCR Air conditioning Safety Train Switchover via Switches 0-PDIS-31-186, 0-FS-31-94 & 0-TS-31-89B | Temperature increase in the MCRHZ | None. (See Remarks) | Redundant AHU A-A starts upon signal from AHU B-B high temperature switch 0-TS-31-89B |

**Table 9.4-7 Failure Modes and Effects Analysis Control Building HVAC (Sheet 17 of 52)**

| ITEM NO. | COMPONENT IDENTIFICATION | FUNCTION | FAILURE MODE | POTENTIAL CAUSE | METHOD OF FAILURE DETECTION | EFFECT ON SYSTEM | EFFECT ON PLANT | REMARKS |
|---|---|---|---|---|---|---|---|---|
| 29B Cont. | -Humidifier | Provides moisture to maintain the design relative humidity in MCRHZ during normal operation mode | No humidification | -Steam Boiler failure<br>-Steam Control Valve closes<br>-Mechanical failure<br>-Electrical failure<br>-Mechanical failure<br>-Electrical failure | Moisure Indicator MI-31-201 on Panel L-530 | Decrease of Relative Humidity | None. (See Remarks) | Maintenance of the relative humidity is not required for safe shutdown of plant |
| | | | Humidification Control Valve fails open | | Moisture Indicator MI-31-201 on Panel L-530 | None. (See Remarks) | None. (See Remarks) | MCR moisture level will not exceed design requirements |
| | -Fan | Circulates the air | -Fails to start<br>-Stops | -Mechanical failure<br>-Electrical failure | Annunciation in MCR of MCR Air conditioning Safety Train Switchover via Switches 0-PDIS-31-186, 0-FS-31-94 & 0-TS-31-89B | Loss of air flow through AHU A–A | None. (See Remarks) | Redundant AHU A-A starts upon signal from AHU B-B Air flow Switch FS-31-94 |
| | | | Fails to stop or, starts | -Electrical failure | Annunciation in MCR of MCR Air conditioning Safety Train Switchover via Switches 0-PDIS-31-186, 0-FS-31-94 & 0-TS-31-89B | Increased pressure in duct | None. (See Remarks) | When both AHUs are operating the common ductwork static pressure does not exceed 6 inches wg safety-related duct design pressure |

**Table 9.4-7 Failure Modes and Effects Analysis Control Building HVAC (Sheet 18 of 52)**

| ITEM NO. | COMPONENT IDENTIFICATION | FUNCTION | FAILURE MODE | POTENTIAL CAUSE | METHOD OF FAILURE DETECTION | EFFECT ON SYSTEM | EFFECT ON PLANT | REMARKS |
|---|---|---|---|---|---|---|---|---|
| 30A | Backdraft Damper 0-BKD-31-2105 | Prevent backflow from AHU B-B through AHU A-A when on standby | Fails to open | - Mechanical Failure | Annunciation in MCR of MCR Air Conditioning Safety Train switchover via Switches 0-PDIS-31-161, 0-FS-31-84, and 0-TS-31-88B | Loss of flow through AHU A-A | None (See Remarks) | Redundant AHU B-B start upon signal from AHU A-A Air Flow Switch FS-31-84 |
| | | | Fails to close (AHU A-A on Standby) | - Mechanical Failure | | None (See Remarks) | None (See Remarks) | Isolation Damper 0-FCO-31-12 prevents the backflow |
| 30B | Backdraft Damper 0-BKD-31-2104 | Prevent backflow from AHU A-A through AHU B-B when on standby | Fails to open | - Mechanical Failure | Annunciation in MCR of MCR Air Conditioning Safety Train switchover via Switches 0-PDIS-31-186, 0-FS-31-94, and 0-TS-31-89B | Loss of air flow through AHU B-B | None (See Remarks) | Redundant AHU A-A starts upon signal from AHU B-B Air Flow Switch FS-31-94 |
| | | | Fails to Close (AHU B-B on Standby) | - Mechanical Failure | | None (See Remarks) | None (See Remarks) | Isolation Damper 0-FCO-31-11 prevents the backflow |
| 30C | Backdraft Damper 0-BKD-31-2103 | See Remarks | See Remarks | See Remarks | See Remarks | See Remarks | See Remarks | This backdraft damper is not required and is locked in open position |

**Table 9.4-7 Failure Modes and Effects Analysis Control Building HVAC (Sheet 19 of 52)**

| ITEM NO. | COMPONENT IDENTIFICATION | FUNCTION | FAILURE MODE | POTENTIAL CAUSE | METHOD OF FAILURE DETECTION | EFFECT ON SYSTEM | EFFECT ON PLANT | REMARKS |
|---|---|---|---|---|---|---|---|---|
| 31 | Fire Damper 0-XFD-31-98 | To prevent smoke spreading to Conference Room, Shift Eng. Office, Lockers, Toilet, and Kitchen | Open during fire | - Mechanical Failure<br>- Electrical Failure | See Remarks | See Remarks | See Remarks | Single failures of HVAC system need not be postulated as being concurrent with fire |
| | | | Close during other modes of operation | - ETL Link Failure | Surveillance and Maintenance | None (See Remarks) | None (See Remarks) | This fire damper has two ETL links |
| 32 | Fire Damper 0-XFD-31-86 | Fire barrier between Relay Room and Main Control Room | Open during fire | - Mechanical Failure<br>- Electrical Failure | See Remarks | See Remarks | See Remarks | Single failures of HVAC system need not be postulated as being concurrent with fire |
| | | | Close during other modes of operation | - ETL Link Failure | Surveillance and Maintenance | None (See Remarks) | None (See Remarks) | This fire damper has two ETL Links |
| 33 | Fire Damper 0-ISD-31-4402 | Prevent fire spreading to Conference Room | Open during fire | - Mechanical Failure | See Remarks | See Remarks | See Remarks | Single failures of HVAC system need not be postulated as being concurrent with fire |
| | | | Close during other modes of operation | - Fusible Link Failure | Surveillance and Maintenance | Loss of supply air to room | None (See Remarks) | Maintenance of the room design temperature is not essential to the Control Building Safety Function |

**Table 9.4-7 Failure Modes and Effects Analysis Control Building HVAC (Sheet 20 of 52)**

| ITEM NO. | COMPONENT IDENTIFICATION | FUNCTION | FAILURE MODE | POTENTIAL CAUSE | METHOD OF FAILURE DETECTION | EFFECT ON SYSTEM | EFFECT ON PLANT | REMARKS |
|---|---|---|---|---|---|---|---|---|
| 34 | Fire Damper 0-ISD-31-4404 | Prevent fire spreading to NRC Office | Open during fire | - Mechanical Failure | See Remarks | See Remarks | See Remarks | Single failures of HVAC system need not be postulated as being concurrent with fire |
| | | | Close during other modes of operation | - Fusible Link Failure | Surveillance and Maintenance | Loss of supply air to room | See Remarks | Maintenance of the room design temperature is not essential to the Control Building Safety Function |
| 35 | Fire Damper 0-XFD-31-76 | Fire barrier to Technical Support Center (TSC) | Open during fire | -Mechanical Failure | See Remarks | See Remarks | See Remarks | Single failures of HVAC system need not be postulated as being concurrent with fire. |
| | | | Close during other modes of operation | -Fusible Link Failure | Surveillance and Maintenance | Loss of supply air to the room | See Remarks | Maintenance of the room design temperature is not essential to the Control Building Safety Function |
| 36A | MCR Water Chiller A-A | Cooling of Chilled Water | -Fails to start<br>-Stops | -Mechanical Failure<br>-Electrical Failure | Annuniciation in MCR of MCR Air Conditioning Safety Train Switchover via Switches 0-PDIS-31-161, 0-FS-31-84 & 0-TS-31-88B | Increase in chilled water temperature | None (See Remarks) | Redundant MCR Air Conditioning Train B is started by any of Switches 0-PDIS-31-161, 0-FS-31-84 & 0-TS-31-88B |
| 36B | MCR Water Chiller B-B | Cooling of Chilled Water | - Fails to start<br>- Stops | - Mechanical Failure<br>- Electrical Failure | Annunciation in MCR of MCR Air Conditioning Safety Train switchover via Switches 0-PDIS-31-186, 0-FS-31-94 and 0-TS-31-89B | Increase in chilled water temperature | None (See Remarks) | Redundant MCR Air Conditioning Train A is started by any of Switches 0-PDIS-31-186, 0-FS-31-94, and 0-TS-31-89B |

**Table 9.4-7 Failure Modes and Effects Analysis Control Building HVAC (Sheet 21 of 52)**

| ITEM NO. | COMPONENT IDENTIFICATION | FUNCTION | FAILURE MODE | POTENTIAL CAUSE | METHOD OF FAILURE DETECTION | EFFECT ON SYSTEM | EFFECT ON PLANT | REMARKS |
|---|---|---|---|---|---|---|---|---|
| 37A | MCR Chilled Water Circulation Pump A-A | Circulate the chilled water | - Fails to start<br>- Stops | - Mechanical Failure<br>- Electrical Failure | Annunciation in MCR of MCR Air Conditioning Safety Train switchover via Switch 0-PDIS-31-161 | Loss chilled water flow | None (See Remarks) | Redundant MCR Air Conditioning Train B is started by any of Switches 0-PDIS-31-161, 0-FS-31-84, and 0-TS-31-88B |
| | | | Leakage through seals | - Mechanical Failure | Annunciation in MCR of MCR Air Conditioning Safety Train switchover via Switches 0-PDIS-31-161, 0-FS-31-84, and 0-TS-31-88B | Decrease of water content in the system | None (See Remarks) | Redundant MCR Air Conditioning Train B is started by any of Switches 0-PDIS-31-161, 0-FS-31-84, and 0-TS-31-88B |
| 37B | MCR Water Chiller B-B | Circulate the chilled water | - Fails to start<br>- Stops | - Mechanical Failure<br>- Electrical Failure | Annunciation in MCR of MCR Air Conditioning Safety Train switchover via Switch 0-PDIS-31-186 | Loss of chilled water flow | None (See Remarks) | Redundant MCR Air Conditioning Train A is started by any of Switches 0-PDIS-31-186, 0-FS-31-94, and 0-TS-31-89B |
| | | | Leakage through seals | - Mechanical Failure | Annunciation in MCR of MCR Air Conditioning Safety Train switchover via Switches 0-PDIS-31-186, 0-FS-31-94, and 0-TS-31-89B | Decrease of water content in the system | None (See Remarks) | Redundant MCR Air Conditioning Train A is started by any of Switches 0-PDIS-31-186, 0-FS-31-94, and 0-TS-31-89B |

**Table 9.4-7 Failure Modes and Effects Analysis Control Building HVAC (Sheet 22 of 52)**

| ITEM NO. | COMPONENT IDENTIFICATION | FUNCTION | FAILURE MODE | POTENTIAL CAUSE | METHOD OF FAILURE DETECTION | EFFECT ON SYSTEM | EFFECT ON PLANT | REMARKS |
|---|---|---|---|---|---|---|---|---|
| 38A | Check Valve 0-CKV-31-2193 | Prevents reverse flow | Stuck closed | - Mechanical Failure | Annunciation in MCR of MCR Air Conditioning Safety Train switchover via Switches 0-PDIS-31-161, 0-FS-31-84, and 0-TS-31-88B | Loss of chilled water flow | None (See Remarks) | Redundant MCR Air Conditioning Train B is started by any of Switches 0-PDIS-31-161, 0-FS-31-84, and 0-TS-31-88B |
| | | | Stuck open | - Mechanical Failure | | None (See Remarks) | None (See Remarks) | The subsystem has only one pump. Check valve is preventing backflow during maintenance |
| 38B | Check Valve 0-CKV-31-2235 | Prevents reverse flow | Stuck closed | - Mechanical Failure | Annunciation in MCR of MCR Air Conditioning Safety Train Switchover via Switches 0-PDIS-31-186, 0-FS-31-94, and 0-TS-31-89B | Loss of chilled water flow | None (See Remarks) | Redundant MCR Air Conditioning Train B is started by any of Switches 0-PDIS-31-186, 0-FS-31-94, and 0-TS-31-89B |
| | | | Stuck open | - Mechanical Failure | | None (See Remarks) | None (See Remarks) | The subsystem has only one pump. Check valve is preventing backflow during maintenance |
| 39 | Chilled Water Piping | Provide chilled water system flow path | Pipe break or crack | - Mechanical Failure | Annunciation in MCR of MCR Air Conditioning Safety Train switchover via Switches 0-PDIS-31-161, 0-FS-31-84, and 0-TS-31-88B for Train A and 0-PDIS-31-186, 0-FS-31-94, and 0-TS-31-89B for Train B. | Decrease of water content in the system | None (See Remarks) | Redundant MCR air conditioning subsystems are started by any of the associated switches 0-PDIS-31-161, 0-FS-31-84, and 0-TS-31-88B for Train A and 0-PDIS-31-186, 0-FS-31-96, and 0-TS-31-89B for Train B |

**Table 9.4-7 Failure Modes and Effects Analysis Control Building HVAC (Sheet 23 of 52)**

| ITEM NO. | COMPONENT IDENTIFICATION | FUNCTION | FAILURE MODE | POTENTIAL CAUSE | METHOD OF FAILURE DETECTION | EFFECT ON SYSTEM | EFFECT ON PLANT | REMARKS |
|---|---|---|---|---|---|---|---|---|
| 40 | Chilled Water System Manual Shut-off Valves | Provides shut-offs | - Leakage | - Mechanical Failure | Annunciation in MCR of MCR Air Conditioning Safety Train switchover via Switches 0-PDIS-31-161, 0-FS-31-84, and 0-TS-31-88B for Train A and 0-PDIS-31-186, 0-FS-31-94, and 0-TS-31-89B for Train B. | Decrease of water content in the system | None (See Remarks) | Redundant MCR air conditioning subsystems are started by any of the associated switches 0-PDIS-31-161, 0-FS-31-84, and 0-TS-31-88B for Train A and 0-PDIS-31-186, 0-FS-31-96, and 0-TS-31-89B for Train B |
| 41 | Fire Damper 0-ISD-31-3978 | Fire barrier between Secondary Alarm Station Room and Communications Room | Open during fire | - Mechanical Failure | See Remarks | See Remarks | See Remarks | Single failures of HVAC system need not be postulated as being concurrent with fire |
| | | | Closed during other modes of operation | - Fusible Link Failure | Surveillance and Maintenance | None (See Remarks) | None (See Remarks) | Fire damper has dual fusible links |
| 42 | Fire Damper 0-ISD-31-2037 | Fire barrier between Communications Room and Mechanical Equipment Room 692.0-C10 | Open during fire | - Mechanical Failure | See Remarks | None (See Remarks) | None (See Remarks) | Single failures of HVAC system need not be postulated as being concurrent with fire |
| | | | Closed during other modes of operation | - Fusible Link Failure | Surveillance and Maintenance | None (See Remarks) | None (See Remarks) | Fire damper has dual fusible links |

**Table 9.4-7 Failure Modes and Effects Analysis Control Building HVAC (Sheet 24 of 52)**

| ITEM NO. | COMPONENT IDENTIFICATION | FUNCTION | FAILURE MODE | POTENTIAL CAUSE | METHOD OF FAILURE DETECTION | EFFECT ON SYSTEM | EFFECT ON PLANT | REMARKS |
|---|---|---|---|---|---|---|---|---|
| 43 | Fire Dampers (4) 0-ISD-31-2036, 0-ISD-31-2038, 0-ISD-31-2039, and 0-ISD-31-3951 | Fire barrier between Communication Room and Mechanical Equipment Room 692.0-C10 and Communication Room and corridor, respectively | Open during fire | - Mechanical Failure | See Remarks | See Remarks | See Remarks | Single failures of HVAC system need not be postulated as being concurrent with fire |
| | | | Closed during other modes of operation | - Fusible Link Failure | Surveillance and Maintenance | None (See Remarks) | None (See Remarks) | Fire damper has dual fusible links |
| 44 | Fire Damper (2) 0-ISD-31-4617 and 0-ISD-31-3941 | Fire barrier between corridor and Mechanical Equipment Room 692.0-C2 | Open during fire | - Mechanical Failure | See Remarks | See Remarks | See Remarks | Single failures of HVAC system need not be postulated as being concurrent with fire |
| | | | Closed during other modes of operation | - Fusible Link Failure | Surveillance and Maintenance | None (See Remarks) | See Remarks | Fire damper has dual fusible links |
| 45 | Fire Damper 2-ISD-31-2058 | Fire barrier and isolation between Unit 2 Auxiliary Instrument Room and Computer Room | Open during fire | - Mechanical Failure<br>- Electrical Failure | See Remarks | See Remarks | See Remarks | Single failures of HVAC system need not be postulated as being concurrent with fire. See Item 69B for $CO_2$ system spurious actuation |
| | | | Closed during other modes of operation | - Fusible Link Failure | Surveillance and Maintenance | None (See Remarks) | None (See Remarks) | Fire damper has dual fusible links |

**Table 9.4-7 Failure Modes and Effects Analysis Control Building HVAC (Sheet 25 of 52)**

| ITEM NO. | COMPONENT IDENTIFICATION | FUNCTION | FAILURE MODE | POTENTIAL CAUSE | METHOD OF FAILURE DETECTION | EFFECT ON SYSTEM | EFFECT ON PLANT | REMARKS |
|---|---|---|---|---|---|---|---|---|
| 46 | Fire Damper 0-ISD-31-3968 | Fire barrier between Computer Room and Unit 1 Auxiliary Instrument Room | Open during fire | - Mechanical Failure | See Remarks | See Remarks | See Remarks | Single failures of HVAC system need not be postulated as being concurrent with fire |
| | | | Closed during other modes of operation | - Fusible Link Failure | Surveillance and Maintenance | None (See Remarks) | None (See Remarks) | Fire damper has two independent fusible links installed |
| 47 | Fire Dampers (2) 0-ISD-31-3956 and 0-ISD-31-3957 ($CO_2$ actuated) | Fire barrier and isolation between Computer Room and Unit 1 Auxiliary Instrument Room | Open during fire | - Mechanical Failure<br>- Electrical Failure | See Remarks | See Remarks | See Remarks | Single failures of HVAC system need not be postulated as being concurrent with fire. See Item 69B for $CO_2$ system spurious activation. |
| | | | Closed during other modes of operation | - Fusible Link Failure | Surveillance and Maintenance | None (See Remarks) | None (See Remarks) | Additional independent fusible link to be installed |
| 48 | Fire Dampers (3) 1-ISD-31-3958, 1-ISD-31-3959, and 1-ISD-31-3961 | Isolation of the Unit 1 Auxiliary Instrument Room | Open during fire | - Mechanical Failure<br>- Electrical Failure | See Remarks | See Remarks | See Remarks | Single failures of HVAC system need not be postulated as being concurrent with fire. See Item 69B for $CO_2$ system spurious actuation |
| | | | Closed during other modes of operation | - Fusible Link Failure | | None (See Remarks) | None (See Remarks) | Additional independent fusible link is installed |

**Table 9.4-7 Failure Modes and Effects Analysis Control Building HVAC (Sheet 26 of 52)**

| ITEM NO. | COMPONENT IDENTIFICATION | FUNCTION | FAILURE MODE | POTENTIAL CAUSE | METHOD OF FAILURE DETECTION | EFFECT ON SYSTEM | EFFECT ON PLANT | REMARKS |
|---|---|---|---|---|---|---|---|---|
| 49 | Fire Damper 0-ISD-31-4297 | Prevent spreading of fire | Open during fire | - Mechanical Failure | See Remarks | See Remarks | See Remarks | Single failures of HVAC system need not be postulated as being concurrent with fire |
| | | | Closed during other modes of operation | - Fusible Link Failure | Surveillance and Maintenance | None (See Remarks) | None (See Remarks) | Fire damper has dual fusible links |
| 50 | Backdraft Damper 0-BKD-31-2086 | See Remarks | See Remarks | See Remarks | See Remarks | See Remarks | See Remarks | This backdraft damper is not required since the air flow can be controlled by Balancing Damper 0-31-2087 and is locked in open position |
| 51 | Fire Damper 0-ISD-31-3971 | To maintain fire barrier integrity between Unit 1 Auxiliary Instrument Room Elev. 708.0 and Mechanical Equipment Room 692.0-C2 | Open during fire (See Remarks) | - Mechanical Failure | See Remarks | See Remarks | See Remarks | Single failures of HVAC system need not be postulated as being concurrent with fire |
| | | | Fusible link failure (See Remarks) | Mechanical (fusible link failure) | Surveillance and Maintenance | None (See Remarks) | None (See Remarks) | This fire damper has two independent fusible links |

**Table 9.4-7 Failure Modes and Effects Analysis Control Building HVAC (Sheet 27 of 52)**

| ITEM NO. | COMPONENT IDENTIFICATION | FUNCTION | FAILURE MODE | POTENTIAL CAUSE | METHOD OF FAILURE DETECTION | EFFECT ON SYSTEM | EFFECT ON PLANT | REMARKS |
|---|---|---|---|---|---|---|---|---|
| 52A | Isolation Damper 0-FCO-31-30 | Isolate Electrical Board Room AHUs A-A and B-B while on standby | Close during AHUs A-A and B-A operation | - Mechanical Failure<br>- Electrical Failure | Annunciation in MCR of MCR Air Conditioning Safety Train Switchover via Switches 0-PDIS-31-211, 0-FS-31-117 and -123, and 0-TS-31-150B | Loss of air flow path through AHUs A-A and B-A | None (See Remarks) | Redundant Train B AHUs C-B and D-B start on low air flow signal from AHUs A-A and B-A Air Flow Switches FS-31-117 or FS-31-123 |
| | | | Open when AHUs are on standby | - Mechanical Failure<br>- Electrical and Auxiliary Control Air Failure | | None (See Remarks) | None (See Remarks) | Backdraft dampers 0-31-2001A and 0-31-2001B prevents backflow |
| 52B | Isolation Damper 0-FCO-31-31 | Isolate Electrical Board Room AHUs C-B and D-B while on standby | Close during AHUs C-B and D-B operation | - Mechanical Failure<br>- Electrical Failure | Annunciation in MCR of MCR Air Conditioning Safety Train Switchover via Switches 0-PDIS-31-241, 0-FS-31-126 and -154, and 0-TS-31-157B | Loss of air flow path through AHUs C-B and D-B | None (See remarks) | Redundant Train A AHUs A-A and B-A start on low air flow signal from AHUs C-B and D-B Air Flow Switches FS-31-126 or FS-31-154 |
| | | | Open when AHUs are on standby | - Mechanical Failure<br>- Electrical and Auxiliary Control Air Failure | | None (See Remarks) | None (See Remarks) | Backdraft Dampers 0-31-3972 and 0-31-3973 prevents backflow |

**Table 9.4-7 Failure Modes and Effects Analysis Control Building HVAC (Sheet 28 of 52)**

| ITEM NO. | COMPONENT IDENTIFICATION | FUNCTION | FAILURE MODE | POTENTIAL CAUSE | METHOD OF FAILURE DETECTION | EFFECT ON SYSTEM | EFFECT ON PLANT | REMARKS |
|---|---|---|---|---|---|---|---|---|
| 53A | Modulating Dampers (2) 0-FCO-31-335 & 0-FCO-31-336 | Modulates the air flow through cooling coil and bypass of AHU's A-A & B-A to maintain the temperature at thermostat setpoint 0-TE-31-335 and -336 | Open | - Mechanical Failure<br>- Control Air Failure | Annunciation in MCR of MCR Air Conditioning Safety Train Switchover[1] via Switches 0-FS-31-117 and -123, and 0-TS-31-150B | Air bypasses the cooling coil and results in increase of space temperature | None (See Remarks) | Temperature Switch TS-31-150B starts the redundant AHUs upon Temp. Element TE-31-150B sensing high return air temperature |
| | | | Spurious modulation | - Control Failure | | Space is not maintained at set temperature | None (See Remarks) | Same as above |
| 53B | Modulating Dampers (2) 0-FCO-31-337 and 0-FCO-31-338 | Modulates air flow through cooling coil and bypass of AHUs C-B and D-B to maintain the temperature at thermostat setpoint 0-TE-31-337 and 0-TE-31-338 | Open | - Mechanical Failure<br>- Control Air Failure | Annunciation in MCR of MCR Air Conditioning Safety Train Switchover via Switches 0-FS-31-126 and -154, and 0-TS-31-157B | Air bypasses the cooling coil and results in increase of space temperature | None (See Remarks) | Temperature Switch TS-31-157B starts the redundant AHUs upon Temp. Element TE-31-157B sensing high return air temperature |
| | | | Spurious modulation | - Control Failure | | Space is not maintained at set temperature | None (See Remarks) | Same as above |

**Table 9.4-7 Failure Modes and Effects Analysis Control Building HVAC (Sheet 29 of 52)**

| ITEM NO. | COMPONENT IDENTIFICATION | FUNCTION | FAILURE MODE | POTENTIAL CAUSE | METHOD OF FAILURE DETECTION | EFFECT ON SYSTEM | EFFECT ON PLANT | REMARKS |
|---|---|---|---|---|---|---|---|---|
| 54A | Electrical Board Rooms (EBR) Air Handling Units (AHU) A-A and B-A | | | | | | | |
| | -Filters | Filters the air | Clogged | Accumulation of dirt | Surveillance PDI-31-120 and 121, and Maintenance and Annunciation in MCR of EBR Air Conditioning Safety Train Switchover via Switches 0-FS-31-117 and -123, and 0-TS-31-150B | Reduced air flow | None. (See Remarks) | Surveillance (PDI-31-120 and -121) and maintenance of filters in accordance with maintenance procedures. Either Temp. Switch 0-TS-31-150B or Flow Switches 0-FS-31-117 and -123 starts redundant AHUs C-B and D-B |
| | -Cooling Coil | Cools the supply air | Cooling coil tube break or crack | -Mechanical Failure | Annunciation in MCR of EBR Air Conditioning Safety Train Switchover via Switches 0-PDIS-31-211, 0-FS-31-117 and -123, and 0-TS-31-150B | Temperature increases in the EBR spaces. | None (See Remarks) | Redundant AHUs C-B and D-B starts upon signal from AHUs A-A and B-A High Temp Switch TS-31-150B |
| | -Humidifier | Provides moisture to maintain the design Relative Humidity in EBR spaces during normal operation mode | No humidification | -Steam Boiler Failure<br>-Steam Control Valve closes<br>-Mechanical Failure<br>-Electrical Failure | Moisture Indicator MI-31-231 on Local Panel L-523 | None (See Remarks) | None (See Remarks) | Maintenance of the relative humidity is not required for safe shutdown of plant |

**Table 9.4-7 Failure Modes and Effects Analysis Control Building HVAC (Sheet 30 of 52)**

| ITEM NO. | COMPONENT IDENTIFICATION | FUNCTION | FAILURE MODE | POTENTIAL CAUSE | METHOD OF FAILURE DETECTION | EFFECT ON SYSTEM | EFFECT ON PLANT | REMARKS |
|---|---|---|---|---|---|---|---|---|
| | -Fan | Circulates the air | -Fails to start<br>-Stops | -Mechanical Failure<br>-Electrical Failure | Annunciation in MCR of EBR Air Conditioning Safety Train Switchover via Switches 0-FS-31-117 and -123, and 0-TS-31-150B | Loss of air flow through AHU | None (See Remarks) | Redundant AHUs C-B and D-B starts upon signal from AHUs A-A and B-A Air Flow Switches FS-31-117 or FS-31-123 |
| | | | -Fails to stop or start | Electrical Failure | Annunciation in MCR of EBR Air Conditioning Safety Train Switchover via Switches 0-FS-31-117 and -123, and 0-TS-31-150B | Increased pressure in duct | None (See Remarks) | When both AHUs are operating, the common ductowork static pressure does not exceed 6 inches wg safety-related duct design pressuer |
| 54B | Electrical Board Rooms (EBR) Air Handling Units (AHU) C-B and D-B | | | | | | | |
| | -Filters | Filters the air | Clogged | Accumulation of dirt | Surveillance PDI-31-125 and PDI-31-152, and Maintenance and Annunciation in MCR of EBR Air Conditioning Safety Train Switchover via Switches 0-FS-31-126 and -154, and 0-TS-31-157B | Reduced air flow may result in rise of space temperatures | None. (See Remarks) | Surveillance (PDI-31-125 and -152) and maintenance of filters in accordance with maintenance procedures. Either Temp. Switch 0-TS-31-157B or Flow Switches 0-FS-31-126 and -154 starts redundant AHUs A-A and B-A |

**Table 9.4-7 Failure Modes and Effects Analysis Control Building HVAC (Sheet 31 of 52)**

| ITEM NO. | COMPONENT IDENTIFICATION | FUNCTION | FAILURE MODE | POTENTIAL CAUSE | METHOD OF FAILURE DETECTION | EFFECT ON SYSTEM | EFFECT ON PLANT | REMARKS |
|---|---|---|---|---|---|---|---|---|
| | -Cooling Coil | Cools the supply air | Cooling coil tube break or crack | -Mechanical Failure | Annunciation in MCR of EBR Air Conditioning Safety Train Switchover via Switches 0-PDIS-31-241, 0-FS-31-126 and -154, and 0-TS-31-157B | Temperature increases in the EBR spaces. | None (See Remarks) | Redundant AHUs A-A and B-A starts upon signal from AHUs C-B and D-B High Temp Switch TS-31-157B |
| | -Humidifier | Provides moisture to maintain the design Relative Humidity in EBR spaces during normal operation mode | No humidification | -Steam Boiler Failure<br>-Steam Control Valve closes<br>-Mechanical Failure<br>-Electrical Failure | Moisture Indicator MI-31-261 on Local Panel L-524 | None (See Remarks) | None (See Remarks) | Maintenance of the relative humidity is not required for safe shutdown of plant |
| 54B Cont. | -Fan | Circulates the air | -Fails to start<br>-Stops | -Mechanical Failure<br>-Electrical Failure | Annunciation in MCR of MCR Air Conditioning Safety Train Switchover via Switches 0-FS-31-126 and -154, and 0-TS-31-157B | Loss of air flow through AHUs C-B and D-B | None (See Remarks) | Redundant AHUs A-A and B-B starts upon signal from AHUs C-B and D-B Air Flow Switches FS-31-126 or FS-31-154 |
| | | | -Fails to stop or start | Electrical Failure | Annunciation in MCR of MCR Air Conditioning Safety Train Switchover via Switches 0-FS-31-126 and -154, and 0-TS-31-157B | Increased pressure in duct | None (See Remarks) | When both AHUs are operating, the common ductwork static pressure does not exceed 6 inches wg safety-related duct design pressuer |

**Table 9.4-7 Failure Modes and Effects Analysis Control Building HVAC (Sheet 32 of 52)**

| ITEM NO. | COMPONENT IDENTIFICATION | FUNCTION | FAILURE MODE | POTENTIAL CAUSE | METHOD OF FAILURE DETECTION | EFFECT ON SYSTEM | EFFECT ON PLANT | REMARKS |
|---|---|---|---|---|---|---|---|---|
| 55A | Backdraft Dampers (2) 0-BKD-31-2001A and 0-BKD-31-2001B | Prevent backflow from Train B AHUs through Train A air handling units when on standby | Fails to open | - Mechanical Failure | Annunciation in MCR of EBR Air Conditioning Safety Train Switchover via Switches 0-PDIS-31-211, 0-FS-31-117 and -123, and 0-TS-31-150B | Loss of air flow through AHUs A-A and B-A | None (See Remarks) | Redundant AHUs C-B and D-B starts upon signal from AHUs A-A or B-A Air Flow Switches FS-31-117 and FS-31-123, respectively |
| | | | Fails to close (AHUs A-A and B-A on standby) | - Mechanical Failure | | None (See Remarks) | None (See remarks) | Isolation Damper 0-FCO-31-30 prevents the backflow |
| 55B | Backdraft Dampers (2) 0-BKD-31-3972 and 0-BKD-31-3973 | Prevent backflow from Train A AHUs through Train B air handling units when on standby | Fails to open | - Mechanical Failure | Annunciation in MCR of EBR Air Conditioning Safety Train Switchover via Switches 0-PDIS--31-241, 0-FS-31-126 and -154, and 0-TS-31-157B | Loss of air flow through AHUs A-A and B-A | None (See Remarks) | Redundant AHUs A-A and B-A starts upon signal from AHUs C-B or D-B Air Flow Switches FS-31-126 and FS-31-154, respectively |
| | | | Fails to close (AHUs C-B and D-B on standby) | - Mechanical Failure | | None (See Remarks) | None (See Remarks) | Isolation Damper 0-FCO-31-31 prevents the backflow |

**Table 9.4-7 Failure Modes and Effects Analysis Control Building HVAC (Sheet 33 of 52)**

| ITEM NO. | COMPONENT IDENTIFICATION | FUNCTION | FAILURE MODE | POTENTIAL CAUSE | METHOD OF FAILURE DETECTION | EFFECT ON SYSTEM | EFFECT ON PLANT | REMARKS |
|---|---|---|---|---|---|---|---|---|
| 56 | Fire Damper 0-ISD-31-3942 | Fire barrier between Mechanical Equipment Room 692.0-C2 and 250V Battery Room #1 | Open during fire | - Mechanical Failure | See Remarks | See Remarks | See Remarks | Single failures of HVAC systems need not be postulated as being concurrent with fire |
| | | | Closed during other modes of operation | - Mechanical Failure | Surveillance and Maintenance | None (See Remarks) | None (See Remarks) | Fire damper has dual fusible links |
| 57 | Fire Damper 0-ISD-31-3943 | Fire barrier between 250V Battery Room #1 and 250V Battery Board Room #1 | Open during fire | - Mechanical Failure | See Remarks | See Remarks | See Remarks | Single failures of HVAC systems need not be postulated as being concurrent with fire |
| | | | Closed during other modes of operation | - Fusible Link Failure | Surveillance and maintenance | None (See Remarks) | None (See Remarks) | Fire damper has dual fusible links |
| 58 | Fire Damper 0-ISD-31-3944 | Fire barrier between 250V Battery Board Room #1 and 250V Battery Board Room #2 | Open during fire | - Mechanical failure | See Remarks | See Remarks | See Remarks | Single failures of HVAC systems need not be postulated as being concurrent with fire |
| | | | Closed during other modes of operation | - Fusible Link Failure | Surveillance and Maintenance | None (See Remarks) | None (See Remarks) | Fire damper has dual fusible links |

**Table 9.4-7 Failure Modes and Effects Analysis Control Building HVAC (Sheet 34 of 52)**

| ITEM NO. | COMPONENT IDENTIFICATION | FUNCTION | FAILURE MODE | POTENTIAL CAUSE | METHOD OF FAILURE DETECTION | EFFECT ON SYSTEM | EFFECT ON PLANT | REMARKS |
|---|---|---|---|---|---|---|---|---|
| 59 | Fire Damper 0-ISD-31-3947 | Fire barrier between 250V Battery Board Room #2 and 250V Battery Room #2 | Open during fire | - Mechanical Failure | See Remarks | See Remarks | See Remarks | Single failures of HVAC systems need not be postulated as being concurrent with fire |
| | | | Closed during other modes of operation | - Mechanical Failure | Surveillance and Maintenance | None (See Remarks) | See Remarks | Fire damper has dual fusible links |
| 60 | Fire Damper 0-ISD-31-3948 | Fire barrier between 250V Battery Room #2 and 24V and 48V Battery Room | Open during fire | - Mechanical Failure | See Remarks | See Remarks | See Remarks | Single failures of HVAC systems need not be postulated as being concurrent with fire |
| | | | Closed during other modes of operation | - Fusible Link Failure | None (See Remarks) | None (See Remarks) | See Remarks | Fire damper has dual fusible links |
| 61 | Fire Damper 0-ISD-31-3949 | Fire barrier between 24V and 48V Battery Room and 24V and 48V Battery Board and Charge Room | Open during fire | - Mechanical Failure | See Remarks | See Remarks | See Remarks | Single failures of HVAC systems need not be postulated as being concurrent with fire |
| | | | Closed during other modes of operation | - Mechanical Failure | Surveillance and Maintenance | None (See Remarks) | See Remarks | Fire damper has dual fusible links |

**Table 9.4-7 Failure Modes and Effects Analysis Control Building HVAC (Sheet 35 of 52)**

| ITEM NO. | COMPONENT IDENTIFICATION | FUNCTION | FAILURE MODE | POTENTIAL CAUSE | METHOD OF FAILURE DETECTION | EFFECT ON SYSTEM | EFFECT ON PLANT | REMARKS |
|---|---|---|---|---|---|---|---|---|
| 62 | Fire Damper 0-ISD-31-3950 | Fire barrier between 24V and 48V Battery Board and Charge Room and Central Alarm Station Room | Open during fire | - Mechanical Failure | See Remarks | See Remarks | See Remarks | Single failures of HVAC systems need not to be postulated as being concurrent with fire |
| | | | Closed during other modes of operation | - Fusible Link Failure | Surveillance and Maintenance | None (See Remarks) | See Remarks | Additional independent fusible link is installed |
| 63 | Fire Dampers (2) 0-ISD-31-3976 and 0-ISD-31-3977 | Fire barrier between Central Alarm Station Room and Communication Room | Open during fire | - Mechanical Failure | See Remarks | See Remarks | See Remarks | Single failures of HVAC systems need not to be postulated as being concurrent with fire |
| | | | Closed during other modes of operation | - Mechanical Failure | Surveillance and Maintenance | None (See Remarks) | See Remarks | Additional independent fusible link is installed |
| 64 | Fire Damper 0-ISD-31-3970 | Fire barrier between Unit 1 Auxiliary Instrument Room and the Mechanical Equipment Room 692.0-C2 | Open during fire | - Mechanical Failure | See Remarks | See Remarks | See Remarks | Single failures of HVAC systems need not to be postulated as being concurrent with fire |
| | | | Closed during other modes of operation | - Mechanical Failure | Surveillance and Maintenance | None (See Remarks) | None (See Remarks) | This fire damper has two independent fusible links |

**Table 9.4-7 Failure Modes and Effects Analysis Control Building HVAC (Sheet 36 of 52)**

| ITEM NO. | COMPONENT IDENTIFICATION | FUNCTION | FAILURE MODE | POTENTIAL CAUSE | METHOD OF FAILURE DETECTION | EFFECT ON SYSTEM | EFFECT ON PLANT | REMARKS |
|---|---|---|---|---|---|---|---|---|
| 65 | Fire Damper 0-ISD-31-3969 | Fire barrier between Unit 1 Auxiliary Instrument Room and Computer Room | Open during fire | - Mechanical Failure | See Remarks | See Remarks | See Remarks | Single failures of HVAC system need not to be postulated as being concurrent with fire |
| | | | Closed during other modes of operation | - Mechanical Failure | Surveillance and Maintenance | None (See Remarks) | None (See Remarks) | Fire damper has two independent fusible links installed |
| 66 | Fire Damper 2-ISD-31-3955 | Fire barrier between Computer Rooms and Unit 2 Auxiliary Instrument Room | Open during fire | - Mechanical Failure | See Remarks | See Remarks | See Remarks | Single failures of HVAC system need not be postulated as being concurrent with fire. See Item 69B for $CO_2$ system spurious actuation |
| | | | Closed during other modes of operation | - Fusible Link Failure | Surveillance and Maintenance | None (See Remarks) | None (See Remarks) | Fire damper has dual fusible links |
| 67 | Fire Damper 0-ISD-31-4296 | Fire barrier in EBR supply to computer room | Open during fire | - Mechanical Failure | See Remarks | See Remarks | See Remarks | Single failures of HVAC system need not be postulated as being concurrent with fire |
| | | | Close during other modes of operation | - Fusible Link Failure | Surveillance and Maintenance | None (See Remarks) | None (See Remarks) | Fire damper has dual fusible links |

**Table 9.4-7 Failure Modes and Effects Analysis Control Building HVAC (Sheet 37 of 52)**

| ITEM NO. | COMPONENT IDENTIFICATION | FUNCTION | FAILURE MODE | POTENTIAL CAUSE | METHOD OF FAILURE DETECTION | EFFECT ON SYSTEM | EFFECT ON PLANT | REMARKS |
|---|---|---|---|---|---|---|---|---|
| 68 | Fire Damper 0-ISD-31-3956 | Fire barrier between Unit 1 Auxiliary Instrument Room and Computer Room | Open during fire | - Mechanical Failure | See Remarks | See Remarks | See Remarks | Single failures of HVAC system need not be postulated as being concurrent with fire. See Item 69B for $CO_2$ system spurious failure |
| | | | Close during other modes of operation | - Fusible Link Failure | Surveillance and Maintenance | None (See Remarks) | None (See Remarks) | Fire damper has dual fusible links |
| 69A | Fire Damper 1-ISD-31-3960 | Provide isolation of Unit 1 Auxiliary Instrument Room during $CO_2$ fire extinguishing | Open during fire | - Mechanical Failure | See Remarks | See Remarks | See Remarks | Single failures of HVAC system need not be postulated as being concurrent with fire. See Item 69B for $CO_2$ system spurious failure. This fire damper has $CO_2$ actuator without fusible link<br><br>See Item 69B for $CO_2$ system spurious failure |
| 69B | Fire Damper 2-ISD-31-2058 2-ISD-31-3955 0-ISD-31-3956 0-ISD-31-3657 1-ISD-31-3958 1-ISD-31-3959 1-ISD-31-3960 1-ISD-31-3961 | Provide isolation of Unit #1 and Unit #2 Auxiliary Instrument Rooms and Computer Room during $CO_2$ fire extinguishing. | Closed during a spurious actuation of the $CO_2$ system | - Electrical Failure | Annunciation in MCR following a $CO_2$ discharge | Loss of cooling in Unit #1 and Unit #2 Auxiliary Instrument Rooms and Computer Room | None (See Remarks) | Plant can be shut down from Auxiliary Control Room |

**Table 9.4-7 Failure Modes and Effects Analysis Control Building HVAC (Sheet 38 of 52)**

| ITEM NO. | COMPONENT IDENTIFICATION | FUNCTION | FAILURE MODE | POTENTIAL CAUSE | METHOD OF FAILURE DETECTION | EFFECT ON SYSTEM | EFFECT ON PLANT | REMARKS |
|---|---|---|---|---|---|---|---|---|
| 70A | EBR Water Chiller A-A | Cooling of chilled water | - Fails to start<br>- Stops | - Mechanical Failure<br>- Electrical Failure | Annunciation in MCR of EBR Air Conditioning Safety Train Switchover via Switches 0-PDIS-31-211, 0-FS-31-117 and -123, and 0-TS-31-150B | Increase in chilled water temperature | None (See Remarks) | Redundant EBR air conditioning subsystem is started by any of Switches 0-PDIS-31-211, 0-FS-31-117 and -123, and 0-TS-31-150B |
| 70B | EBR Water Chiller B-B | Cooling of chilled water | - Fails to start<br>- Stops | - Mechanical Failure<br>- Electrical Failure | Annunciation in MCR of EBR air conditioning safety train switchover via Switches 0-PDIS-31-241, 0-FS-31-126 and -154, and 0-TS-31-157B | Increase in chilled water temperature | None (See Remarks) | Redundant EBR air conditioning subsystem is started by any of Switches 0-PDIS-31-241, 0-FS-31-126 and -156, and 0-TS-31-157B |

**Table 9.4-7 Failure Modes and Effects Analysis Control Building HVAC (Sheet 39 of 52)**

| ITEM NO. | COMPONENT IDENTIFICATION | FUNCTION | FAILURE MODE | POTENTIAL CAUSE | METHOD OF FAILURE DETECTION | EFFECT ON SYSTEM | EFFECT ON PLANT | REMARKS |
|---|---|---|---|---|---|---|---|---|
| 71A | EBR Chilled Water Circ. Pump A-A | Circulate the chilled water | - Fails to start<br>- Stops | - Mechanical Failure<br>- Electrical Failure | Annunciation in MCR of EBR air conditioning safety train switchover via Switch 0-PDIS-31-211 | Loss of chilled water flow | None (See Remarks) | Redundant EBR air conditioning Train B is started by any of Switches 0-PDIS-31-211, 0-FS-31-117 and -123, and 0-TS-31-150B |
| | | | Leakage through seals | - Mechanical Failure | Annunciation in MCR of EBR air conditioning safety train switchover via Switches 0-PDIS-31-211, 0-FS-31-117 and -123, and 0-TS-31-150B | Decrease of water content in the system | None (See Remarks) | Same as above |
| 71B | EBR Chilled Water Circ. Pump B-B | Circulate the chilled water | - Fails to start<br>- Stops | - Mechanical Failure<br>- Electrical Failure | Annunciation in MCR of EBR air conditioning safety train switchover via Switch 0-PDIS-31-241 | Loss of chilled water flow | None (See Remarks) | Redundant EBR air conditioning Train A is started by any of Switches 0-PDIS-31-241, 0-FS-31-126 and -154, and 0-TS-31-157B |
| | | | Leakage through seals | - Mechanical Failure | Annunciation in MCR of EBR air conditioning safety train switchover via Switches 0-PDIS-31-241, 0-FS-31-126 and -154, and 0-TS-31-157B | Decrease of water content in the system | None (See Remarks) | Same as above |

**Table 9.4-7 Failure Modes and Effects Analysis Control Building HVAC (Sheet 40 of 52)**

| ITEM NO. | COMPONENT IDENTIFICATION | FUNCTION | FAILURE MODE | POTENTIAL CAUSE | METHOD OF FAILURE DETECTION | EFFECT ON SYSTEM | EFFECT ON PLANT | REMARKS |
|---|---|---|---|---|---|---|---|---|
| 72A | Check Valve 0-CKV-31-2307 | Prevent reverse flow | Stuck closed | - Mechanical Failure | Annunciation in MCR of EBR air conditioning safety train switchover via Switches 0-PDIS-31-211, 0-FS-31-117 and -123, and 0-TS-31-150B | Loss of chilled water flow | None (See Remarks) | Redundant EBR air conditioning Train B is started by any of Switches 0-PDIS-31-211, 0-FS-31-117 and -123, and 0-TS-31-150B |
| | | | Stuck open | - Mechanical Failure | | None (See Remarks) | None (See Remarks) | The subsystem has only one pump. Check valve prevents backflow during maintenance |
| 72B | Check Valve 0-CKV-31-2364 | Prevent reserve flow | Stuck closed | - Mechanical Failure | Annunciation in MCR of EBR air conditioning safety train switchover via Switches 0-PDIS-31-241, 0-PS-31-126 and -154 and 0-TS-31-157B | Loss of chilled water flow | None (See Remarks) | Redundant EBR air conditioning Train A is started by any of switches 0-PDIS-31-241, 0-FS-31-126 and -154, and 0-TS-31-157B. |
| | | | Stuck open | - Mechanical Failure | | None (See Remarks) | None (See Remarks) | The subsystem has only one pump. Check valve prevents backflow during maintenance. |

**Table 9.4-7 Failure Modes and Effects Analysis Control Building HVAC (Sheet 41 of 52)**

| ITEM NO. | COMPONENT IDENTIFICATION | FUNCTION | FAILURE MODE | POTENTIAL CAUSE | METHOD OF FAILURE DETECTION | EFFECT ON SYSTEM | EFFECT ON PLANT | REMARKS |
|---|---|---|---|---|---|---|---|---|
| 73 | Chilled Water Piping | Provide chilled water system flow path | Pipe break or crack | - Mechanical Failure | Annunciation in MCR of EBR air conditioning safety train switchover via Switches 0-PDIS-31-211, 0-FS-31-117 and -123, and 0-TS-31-150B for Train A, and 0-PDIS-31-241, 0-FS-31-126 and -154, and 0-TS-31-157B for Train B. | Decrease of water content in the system | None (See Remarks) | Redundant EBR air conditioning subsystem is started by any of Switches 0-PDIS-31-177 and -123, 0-TS-31-150B for Train A, and 0-PDIS-31-241, 0-FS-31-126 and -154, and 0-TS-31-157B for Train B |
| 74 | Chilled Water System manual shut-off valves | Provide Shut-Offs | - Leakage | - Mechanical Failure | Annunciation in MCR of EBR air conditioning safety train switchover via Switches 0-PDIS-31-211, 0-FS-31-117 and -123, and 0-TS-31-150B for Train A, and 0-PDIS-31-241, 0-FS-31-126 and -154, 0-TS-31-157B for Train B | Decrease of water content in the system | None (See Remarks) | Redundant EBR Air Conditioning Subsystems are started by any of the associated Switches 0-PDIS-31-211, 0-FS-31-117 and -123, and 0-TS-31-150B for Train A, and 0-PDIS-31-241, 0-FS-31-126 and -154, and 0-TS-31-157B for Train B |

**Table 9.4-7 Failure Modes and Effects Analysis Control Building HVAC (Sheet 42 of 52)**

| ITEM NO. | COMPONENT IDENTIFICATION | FUNCTION | FAILURE MODE | POTENTIAL CAUSE | METHOD OF FAILURE DETECTION | EFFECT ON SYSTEM | EFFECT ON PLANT | REMARKS |
|---|---|---|---|---|---|---|---|---|
| 75 | Fire Dampers (3)<br>0-ISD-31-2013<br>0-ISD-31-2018<br>0-ISD-31-2029 | Fire barrier between Battery Board Rooms and Corridor | Open during fire | - Mechanical Failure | See Remarks | See Remarks | See Remarks | Single failures of HVAC system need not be postulated as being concurrent with fire. |
| | | | Close during other modes of operation | - Fusible Link Failure | Surveillance and Maintenance | None (See Remarks) | None (See Remarks) | Fire damper has dual fusible links |
| 76 | Fire Dampers (3)<br>0-ISD-31-2010<br>0-ISD-31-2021<br>0-ISD-31-2028 | Fire barrier between Battery Rooms and Corridor | Open during fire | - Mechanical Failure | See Remarks | See Remarks | See Remarks | Single failures of HVAC system need not be postulated as being concurrent with fire. |
| | | | Close during other modes of operation | - Fusible Link Failure | Surveillance and Maintenance | None (See Remarks) | None (See Remarks) | Fire damper has dual fusible links |
| 77 | Fire Damper<br>0-ISD-31-2024 | Fire barrier between 24V and 48V Battery Room and 250V Battery Room #2 | Open during fire | - Mechanical Failure | See Remarks | See Remarks | See Remarks | Single failures of HVAC system need not be postulated as being concurrent with fire. |
| | | | Close during other modes of operation | - Fusible Link Failure | Surveillance and Maintenance | None (See Remarks) | None (See Remarks) | Fire damper has dual fusible links |
| 78 | Fire Damper<br>0-ISD-31-2019 | Fire barrier between 250V Battery Room #2 and 250V Battery Board Room #2 | Open during fire | - Mechanical Failure | See Remarks | See Remarks | See Remarks | Single failures of HVAC system need not be postulated as being concurrent with fire. |
| | | | Close during other modes of operation | - Mechanical Failure | Surveillance and Maintenance | None (See Remarks) | None (See Remarks) | Fire damper has dual fusible links |

**Table 9.4-7 Failure Modes and Effects Analysis Control Building HVAC (Sheet 43 of 52)**

| ITEM NO. | COMPONENT IDENTIFICATION | FUNCTION | FAILURE MODE | POTENTIAL CAUSE | METHOD OF FAILURE DETECTION | EFFECT ON SYSTEM | EFFECT ON PLANT | REMARKS |
|---|---|---|---|---|---|---|---|---|
| 79 | Fire Damper 0-ISD-31-3945 | Fire barrier between 250V Battery Board Room #2 and 250V Battery Board Room #1 | Open during fire<br>Close during other modes of operation | - Mechanical Failure<br>- Fusible Link Failure | See Remarks<br>Surveillance and Maintenance | See Remarks<br>None (See Remarks) | See Remarks<br>None (See Remarks) | Single failures of HVAC system need not be postulated as being concurrent with fire.<br>Fire damper has dual fusible links |
| 80 | Fire Damper 0-ISD-31-2012 | Fire barrier between 250V Battery Board Room #1 and 250V Battery Room #1 | Open during fire<br>Close during other modes of operation | - Mechanical Failure<br>- Fusible Link Failure | See Remarks<br>Surveillance and Maintenance | See Remarks<br>None (See Remarks) | See Remarks<br>None (See Remarks) | Single failures of HVAC system need not be postulated as being concurrent with fire.<br>Fire damper has dual fusible links |
| 81 | Fire Damper 0-ISD-31-2007 | Fire barrier between Battery Room #1 and Mechanical Equipment Room 692.0-C2 | Open during fire<br>Close during other modes of operation | - Mechanical Failure<br>- Fusible Link Failure | See Remarks<br>Surveillance and Maintenance | See Remarks<br>None (See Remarks) | See Remarks<br>None (See Remarks) | Single failures of HVAC system need not be postulated as being concurrent with fire.<br>Fire damper has dual fusible links |
| 82A | Battery Room Exhaust Fan A-A | Battery rooms exhaust to prevent hydrogen buildup | - Fails to start<br>-Stops | - Mechanical Failure<br>- Electrical Failure | Alarm in MCR via Airflow Switch 0-FS-31-402 | Loss of battery rooms exhaust | None (See Remarks) | Redundant Battery Exhaust Fan B-B starts on Low Air Flow signal from Fan A-A Air FLow Switch 0-FS-31-402 |
| 82B | Battery Room Exhaust Fan B-B | Battery rooms exhaust to prevent hydrogen buildup | - Fails to start<br>-Stops | - Mechanical Failure<br>- Electrical Failure | Alarm in MCR via Airflow Switch 0-FS-31-401 | Loss of battery rooms exhaust | None (See Remarks) | Redundant Battery Exhaust Fan A-A starts on Low Air Flow signal from Fan B-B Air Flow Switch 0-FS-31-401 |

**Table 9.4-7 Failure Modes and Effects Analysis Control Building HVAC (Sheet 44 of 52)**

| ITEM NO. | COMPONENT IDENTIFICATION | FUNCTION | FAILURE MODE | POTENTIAL CAUSE | METHOD OF FAILURE DETECTION | EFFECT ON SYSTEM | EFFECT ON PLANT | REMARKS |
|---|---|---|---|---|---|---|---|---|
| 83A | Backdraft Damper 0-BKD-31-2163 | Prevents backflow | Fails to open | - Mechanical Failure | Alarms in MCR via Airflow Switch 0-FS-31-402 | Loss of airflow path through Exhaust Fan B-B | None (See Remarks) | Redundant Battery Exhaust Fan B-B starts on Low Air Flow signal from Fan A-A Air Flow Switch 0-FS-31-402 |
| | | | Fails to close | - Mechanical Failure | | None (See Remarks) | None (See Remarks) | Isolation Damper 0-FCO-31-28 prevents backflow |
| 83B | Backdraft Damper 0-BKD-31-2162 | Prevents backflow | Fails to open | - Mechanical Failure | Alarms in MCR via Airflow Switch 0-FS-31-401 | Loss of airflow path through Exhaust Fan B-B | None (See Remarks) | Redundant Battery Exhaust Fan A-A starts on Low Air Flow signal from Fan B-B Air Flow Switch 0-FS-31-401 |
| | | | Fails to close | - Mechanical Failure | | None (See Remarks) | None (See Remarks) | Isolation Damper 0-FCO-31-29 prevents backflow |
| 84A | Isolation Damper 0-FC0-31-28 | Isolates Fan A-A when on standby | Close during Fan A-A operation | - Mechanical Failure<br>- Electrical Failure | Alarm in MCR via Airflow Switch 0-FS-31-402 | Loss of Airflow Path through Exhaust Fan A-A | None (See Remarks) | Redundant Battery Exhaust Fan B-B starts on Low Air Flow signal from Fan A-A Air Flow Switch 0-FS-31-402. |
| | | | Open when Fan A-A is on Standby | - Mechanical Failure<br>- Electrical Failure | Damper Status Indication on Panel 1-M-9 in MCR via Limit Switch ZS-31-28 | None (See Remarks) | None (See Remarks) | Backdraft Damper 0-BKD-31-2163 will prevent backflow through fan. |

**Table 9.4-7 Failure Modes and Effects Analysis Control Building HVAC (Sheet 45 of 52)**

| ITEM NO. | COMPONENT IDENTIFICATION | FUNCTION | FAILURE MODE | POTENTIAL CAUSE | METHOD OF FAILURE DETECTION | EFFECT ON SYSTEM | EFFECT ON PLANT | REMARKS |
|---|---|---|---|---|---|---|---|---|
| 84B | Isolation Damper 0-FC0-31-29 | Isolates Fan B-B when on standby | Close during Fan B-B operation | - Mechanical Failure<br>- Electrical Failure | Alarm in MCR via Airflow Switch 0-FS-31-401 | Loss of Airflow Path through Exhaust Fan A-A | None (See Remarks) | Redundant Battery Exhaust Fan A-A starts on Low Air Flow signal from Fan B-B Air Flow Switch 0-FS-31-401. |
| | | | Open when Fan B-B is on Standby | - Mechanical Failure<br>- Electrical Failure | Damper Status Indication on Panel 1-M-9 in MCR via Limit Switch 0-MTR-31-29/BRE-B | None (See Remarks) | None (See Remarks) | Backdraft Damper 0-BKD-31-2163 will prevent backflow through fan. |
| 85 | Fire Damper 0-ISD-31-3940 | Fire Barrier between Mechanical Equipment Room 692.0-C2 and Unit #1 Aux. Instr. Rm 708.0 C1 | Open during fire | - Mechanical Failure | See Remarks | See Remarks | See Remarks | Single failures of HVAC system need not be postulated as concurrent with fire. |
| | | | Close during other modes of operation | - Fusible Link Failure | Surveillance and Maintenance | None (See Remarks) | None (See Remarks) | Fire damper has dual fusible links |
| 86 | Fire Damper 0-ISD-31-3939 | Fire Barrier between Unit #1 Aux. Instr. Room 708.0 C1 and Spreading Room | Open during fire | - Mechanical Failure | See Remarks | See Remarks | See Remarks | Single failures of HVAC system need not be postulated as concurrent with fire. |
| | | | Close during other modes of operation | - Fusible Link Failure | Surveillance and Maintenance | None (See Remarks) | None (See Remarks) | Fire damper has dual fusible links |

**Table 9.4-7 Failure Modes and Effects Analysis Control Building HVAC (Sheet 46 of 52)**

| ITEM NO. | COMPONENT IDENTIFICATION | FUNCTION | FAILURE MODE | POTENTIAL CAUSE | METHOD OF FAILURE DETECTION | EFFECT ON SYSTEM | EFFECT ON PLANT | REMARKS |
|---|---|---|---|---|---|---|---|---|
| 87 | Fire Damper 0-ISD-31-3932 | Fire Barrier between Spreading Room and MCRHZ | Open during fire | - Mechanical Failure | See Remarks | See Remarks | See Remarks | Single failures of HVAC system need not be postulated as concurrent with fire. |
| | | | Close during other modes of operation | - Fusible Link Failure | Surveillance and Maintenance | None (See Remarks) | None (See Remarks) | Fire damper has dual fusible links |
| 88 | Tornado Damper 0-FC0-31-14 | Isolation during Tornado Event | Fails to close during Tornado Event | - Mechanical Failure<br>- Electrical Failure | Status Indication in Mechanical Equip. Rm. via Limit Switch ZS-31-14 | None (See Remarks) | None (See Remarks) | Redundant Tornado Damper 0-FC0-31-13 powered from Train B and installed in series accomplishes isolation during Tornado Event |
| | | Isolates exhaust from Battery Room Exhaust Fans A-A and B-B | Spuriously closes | -Electrical Failure | Loss of Flow Alarm in MCR, zone switches ZS-31-13 and ZS-31-14 | Loss of ventilation for Battery Rooms | None (See Remarks) | Operator turns on redundant exhaust fan C-B |
| 89 | Tornado Damper 0-FC0-31-13 | Isolation during Tornado Event | Fails to close during Tornado Event | - Mechanical Failure<br>- Electrical Failure | Status Indication in Mechanical Equip. Rm. via Limit Switch ZS-31-13 | None (See Remarks) | None (See Remarks) | Redundant Tornado Damper 0-FC0-31-14 powered from Train A and installed in series accomplishes isolation during Tornado Event |
| | | Isolates exhaust from Battery Room Exhaust Fans A-A and B-B | Spuriously closes | -Electrical Failure | Loss of Flow Alarm in MCR, zone switches ZS-31-13 and ZS-31-14 | Loss of ventilation for Battery Rooms | None (See Remarks) | Operator turns on redundant exhaust fan C-B |
| 90 | Spreading Room Supply Fan | Supply of Ventilation Air to Spreading Room | Fails to Stop on CRI signal | - Electrical Failure | | None (See Remarks) | None (See Remarks) | Isolation Dampers 0-FC0-31-9 & 10 are closed during CRI and no air is supplied to Spreading Room |

**Table 9.4-7 Failure Modes and Effects Analysis Control Building HVAC (Sheet 47 of 52)**

| ITEM NO. | COMPONENT IDENTIFICATION | FUNCTION | FAILURE MODE | POTENTIAL CAUSE | METHOD OF FAILURE DETECTION | EFFECT ON SYSTEM | EFFECT ON PLANT | REMARKS |
|---|---|---|---|---|---|---|---|---|
| 90A | Spreading Room Non-Safety Supply Fan and Isolation Damper 0-FC0-31-10 or 0-FC0-31-9 | Fan: Supply ventilation air to spreading room dampers: Provide isolation of MCRHZ from spreading room | Failure of the nonsafety related fan to stop concurrent with failure of one of the two dampers failing to close on a CRI signal | - Mechanical Failure<br>- Electrical Failure | Surveillance and Maintenance for fan. Status indication in MCR on Panel 1-M-9 for dampers. | None (See Remarks) | None (See Remarks) | Amount of outleakage generated by this failure will not increase the total MCRHZ outleakage beyond the maximum allowable make-up air quantity. Therefore, the positive pressure of 1/8" wg minimum is maintained even under this failure condition |
| 91 | Isolation Damper 0-FC0-31-10 | Isolation of MCRHZ from Spreading Room | Open during CRI | - Mechanical Failure<br>- Electrical Failure | Status Indication in MCR on Panel 1-M-9 via Limit Switch ZS-31-10 | None (See Remarks) | None (See Remarks) | Redundant Safety Train B Isolation Valve 0-FC0-31-9 installed in series will be closed during CRI to provide isolation |
| 92 | Isolation Damper 0-FC0-31-9 | Isolation of MCRHZ from Spreading Room | Open during CRI | - Mechanical Failure<br>- Electrical Failure | Status Indication in MCR on Panel 1-M-9 via Limit Switch ZS-31-9 | None (See Remarks) | None (See Remarks) | Redundant Safety Train A Isolation Valve 0-FC0-31-10 installed in series will be closed during CRI to provide isolation |
| 93 | Fire Damper 0-ISD-31-3933 | Fire barrier between Mechanical Equipment Room and Spreading Room | Open during fire<br><br>Close | - Mechanical Failure<br><br>- Mechanical Failure | See Remarks<br><br>Surveillance and Maintenance | See Remarks<br><br>None (See Remarks) | See Remarks<br><br>None (See Remarks) | Single failures of HVAC system need not be postulated as being concurrent with fire<br><br>Spreading Room ventilation is isolated during CRI |
| 94 | Spreading Room Exhaust Fans (2-100%) A-A & B-B | Exhaust of Spreading Room | Fails to stop during CRI | - Electrical Failure | | None (See Remarks) | None (See Remarks) | Isolation Dampers 0-FC0-31-9 and 0-FC0-31-10 are closed during CRI |
| 95 | Isolation Dampers 0-FC0-31-25 for Fan A-A and 0-FCO-31-26 for Fan B-B | Isolation of Spreading Room from outside | Open during CRI | - Mechanical Failure<br>- Electrical Failure | Status Indication in MCR on Panel 1-M-9 via Limit Switches ZS-31-25 & ZS-31-26 | None (See Remarks) | None (See Remarks) | The fans are stopped during CRI |

**Table 9.4-7 Failure Modes and Effects Analysis Control Building HVAC (Sheet 48 of 52)**

| ITEM NO. | COMPONENT IDENTIFICATION | FUNCTION | FAILURE MODE | POTENTIAL CAUSE | METHOD OF FAILURE DETECTION | EFFECT ON SYSTEM | EFFECT ON PLANT | REMARKS |
|---|---|---|---|---|---|---|---|---|
| 96 | Backdraft Damper 0-BKD-31-2152 | Prevent backflow to Spreading Room | Open during CRI | - Mechanical Failure | Surveillance and Maintenance | None (See Remarks) | None (See Remarks) | Isolation Dampers 0-FC0-31-25 and 0-FC0-31-26 are closed during CRI |
| 97 | Fire Damper 0-ISD-31-3953 | Fire barrier between Spreading Room and Turbine Room | Open during fire | - Mechanical Failure | See Remarks | See Remarks | See Remarks | Single failures of HVAC system need not be postulated as being concurrent with fire |
| | | | Closed during other modes of operation | - Mechanical Failure | Surveillance and Maintenance | None (See Remarks) | None (See Remarks) | Spreading Room ventilation is isolated during CRI |
| 98 | Tornado Damper 0-FC0-31-24 (Train B) | Isolation during Tornado Event | Fails to close during Tornado Event | - Mechanical Failure<br>- Electrical Failure | Status Indication in Mech Equip Room via Limit Switch ZS-31-24 | None (See Remarks) | None (See Remarks) | Redundant Tornado Damper 0-FC0-31-23 powered from Train A and installed in series accomplishes isolation during Tornado Event |
| | | Isolates Battery Room exhaust fans C-B and spreading room exhausts | Closes spuriously | -Electrical Failure | Loss of flow alarm in MCR, zone switches ZS-31-23, -24 | Loss of ventilation for spreading room (Battery Rm fan C-B is idle) | None (See Remarks) | Spreading Room ventilation is not essential and Battery Rm Exhaust Fan C-B does not normally run. |
| 99 | Tornado Damper 0-FC0-31-23 (Train A) | Isolation during Tornado Event | Fails to close during Tornado Event | - Mechanical Failure<br>- Electrical Failure | Status Indication in Mech Equip Room via Limit Switch ZS-31-23 | None (See Remarks) | None (See Remarks) | Redundant Tornado Damper 0-FC0-31-24 powered from Train B and installed in series accomplishes isolation during Tornado Event |
| | | Isolates Battery Room exhaust fans C-B and spreading room exhausts | Closes spuriously | -Electrical Failure | Loss of flow alarm in MCR, zone switches ZS-31-23, -24 | Loss of ventilation for spreading room (Battery Rm fan C-B is idle) | None (See Remarks) | Spreading Room ventilation is not essential and Battery Rm Exhaust Fan C-B does not normally run. |

**Table 9.4-7 Failure Modes and Effects Analysis Control Building HVAC (Sheet 49 of 52)**

| ITEM NO. | COMPONENT IDENTIFICATION | FUNCTION | FAILURE MODE | POTENTIAL CAUSE | METHOD OF FAILURE DETECTION | EFFECT ON SYSTEM | EFFECT ON PLANT | REMARKS |
|---|---|---|---|---|---|---|---|---|
| 100 | Toilet & Locker Room Exhaust Fan | Provide exhaust of toilets and lockers | Fails to stop during CRI | - Electrical Failure | Surveillance and Maintenance | None (See Remarks) | None (See Remarks) | Isolation Dampers 0-FC0-31-16 and -17 will close during CRI and prevent exhaust air flow during CRI |
| 100A | Toilet & Locker Room Non-Safety Exhaust Fan & Isolation Damper 0-FCO-31-17 or 0-FCO-31-16 | Fan: Provides exhaust of toilets & lockers. Dampers: Provide isolation of MCRHZ from outside during CRI | Failure of the nonsafety related fan to stop concurrent with failure of one of the two dampers failing to close on a CRI signal | - Mechanical Failure<br>- Electrical Failure | Maintenance for fan. Status indication in MCR on Panel 1-M-9 for dampers | None (See Remarks) | None | Amount of outleakage generated by this failure will not increase the total MCRHZ outleakage beyond the maximum allowable make-up air quantity. Therefore, the positive pressure of 1/8" wg minimum is maintained even under this failure condition |
| 101 | Isolation Damper 0- FCO-31-17 | Isolation of MCRHZ during CRI from outside | Open during CRI | - Mechanical Failure<br>- Electrical Failure | Status Indication in Control Room on Panel 1-M-9 via Limit Switch ZS-31-17 | None (See Remarks) | None (See Remarks) | Redundant Safety Train B Isolation Damper 0-FCO-31-16 will be closed during CRI |
| 102 | Tornado Damper 0-FCO-31-16 | Isolation of MCRHZ during CRI from outside | Open during CRI | - Mechanical Failure<br>- Electrical Failure | Status Indication in Control Room on Panel 1-M-9 via Limit Switch ZS-31-16 | None (See Remarks) | None (See Remarks) | Redundant Safety Train A Isolation Damper 0-FCO-31-17 will be closed during CRI |
| 103 | Tornado Damper 0-FCO-31-18 (Train B) | Isolation of MCRHZ during Tornado Event | Fails to close during Tornado Event | - Mechanical Failure<br>- Electrical Failure | Status Indication via Limit Switch ZS-31-18 | None (See Remarks) | None (See Remarks) | Redundant Tornado Damper 0–FCO–31-15 powered from Train A and installed in series accomplishes isolation during Tornado Event |

**Table 9.4-7 Failure Modes and Effects Analysis Control Building HVAC (Sheet 50 of 52)**

| ITEM NO. | COMPONENT IDENTIFICATION | FUNCTION | FAILURE MODE | POTENTIAL CAUSE | METHOD OF FAILURE DETECTION | EFFECT ON SYSTEM | EFFECT ON PLANT | REMARKS |
|---|---|---|---|---|---|---|---|---|
| 104 | Tornado Damper 0-FCO-31-15 (Train A) | Isolation of MCRHZ during Tornado Event | Fails to close during Tornado Event | - Mechanical Failure<br>- Electrical Failure | Status Indication via Limit Switch ZS-31-15 | None (See Remarks) | None. (See Remarks) | Redundant Tornado Damper 0–FCO–31-18 powered from Train B and installed in series accomplishes isolation during Tornado Event |
| 105A | Emergency Power to Train A | Provide power to the Control Building HVAC System Train A | Power Train A fails | - Mechanical Failure (Diesel Generator Failure)<br>- Electrical Failure | Alarm/indication in MCR | Loss of Train A Control Building HVAC Systems | None (See Remarks) | Redundant Train B Control Building HVAC System with its Train B electrical power is available |
| 105B | Emergency Power to Train B | Provide power to the Control Building HVAC System Train B | Power Train B fails | - Mechanical Failure (Diesel Generator Failure)<br>- Electrical Failure | Alarm/indication in MCR | Loss of Train B Control Building HVAC Systems | None (See Remarks) | Redundant Train A Control Building HVAC System with its Train A electrical power is available |
| 106A | Auxiliary Control Air System Train A | Provide safety related control air to Train A valves, dampers and instruments | Loss of Auxiliary Air System Train A | - Mechanical Failure<br>- Electrical Failure | Alarm/indication in MCR | Loss of Train A Control Building HVAC Systems | None (See Remarks) | Redundant Train B Control Building HVAC System with Train B Aux. Control Air System is available |
| 106B | Auxiliary Control Air System Train B | Provide safety related control air to Train B valves, dampers and instruments | Loss of Auxiliary Air System Train B | - Mechanical Failure<br>- Electrical Failure | Alarm/indication in MCR | Loss of Train B Control Building HVAC Systems | None (See Remarks) | Redundant Train A Control Building HVAC System with Train A Aux. Control Air System is available |

**Table 9.4-7 Failure Modes and Effects Analysis Control Building HVAC (Sheet 51 of 52)**

| ITEM NO. | COMPONENT IDENTIFICATION | FUNCTION | FAILURE MODE | POTENTIAL CAUSE | METHOD OF FAILURE DETECTION | EFFECT ON SYSTEM | EFFECT ON PLANT | REMARKS |
|---|---|---|---|---|---|---|---|---|
| 107 | Roof ventilators 1-FAN-30-912, -913, -916, -917 & -918 on Board 1A<br><br>1-FAN-30-909, -910, -911, -914 & –915 on Board 1B<br><br>2-FAN-30-912, -913, -916, -917 & -918 on Board 2A<br><br>2-FAN-30-909, -910, -911, -914, & -915 on Board 2B | Provide Turbine Building El 755' ventilation | - Loss of power to Board 1A | - Electrical | Surveillance and maintenance | None (See Remarks) | None | Loss of power to Board 1A stops five roof ventilators and north supply Fan 1, and results in operation of 15 roof ventilators @ 28,500 cfm each and north supply Fan 2 @ 68,000 cfm and 2 south supply fans @ 35,000 cfm each resulting in lower than atmospheric pressure (68,000 + 2x35,000 - 15X28,500 = -289,500 cfm) |
| | North El 755 Supply Fan 1, 1-FAN-30-924 on Board 1A<br><br>South El 755 Supply Fan 1, 1-FAN-30-921 on Board 1B<br><br>North El 755 Supply Fan 2, 2-FAN-30-924 on Board 2A | | - Loss of power to Board 1B | | Surveillance and maintenance | None (See Remarks) | None | Loss of power to Board 1B stops five roof ventilators and south supply Fan 1, and results in operation of 15 roof ventilators @ 28,500 cfm each and 2 north supply fan @ 68,000 cfm each and one South supply fan @ 35,000 cfm resulting in lower than atmospheric pressure (2x68,000 cfm + 35,000 - 15X28,500 cfm = -256,500 cfm) |

**Table 9.4-7 Failure Modes and Effects Analysis Control Building HVAC (Sheet 52 of 52)**

| ITEM NO. | COMPONENT IDENTIFICATION | FUNCTION | FAILURE MODE | POTENTIAL CAUSE | METHOD OF FAILURE DETECTION | EFFECT ON SYSTEM | EFFECT ON PLANT | REMARKS |
|---|---|---|---|---|---|---|---|---|
| 107 Cont. | South El 755 Supply Fan 2, 2-FAN-30-921 on Board 2B | | - Loss of power to Boards 1B and 2B | | Surveillance and maintenance | None (See Remarks) | None | Loss of power to Boards 1B and 2B stops 10 roof vents and 2 south supply fans and results in operation of 10 roof vents @ 28,500 cfm each and 2 north supply fans @ 35,000 cfm each resulting in lower than atmospheric pressure (2x68,000 cfm - 10-28,500 = -149,000 cfm) |

Note:

1. Refer to TVA Calculation No. TI-639.

**Table 9.4-8 Failure Modes and Effects Analysis for Active Failures Subsystem: Auxiliary Building General Ventilation (Sheet 1 of 11)**

| Item No. | Component Identification | Function | Failure Mode | Potential Cause | Method of Detection | Effect on System | Effect on Plant | Remarks |
|---|---|---|---|---|---|---|---|---|
| 1 | 1-FAN-30-103<br><br>Aux. Bldg. General Supply Fan 1A and associated isolation Dampers 1-FCO-30-86, -87, -106 and -107. | Fan to stop and remain stopped during DBE's. Dampers to close and remain closed during DBE's to prevent flow of supply air to the Aux. Bldg. after an ABI signal. | Fan fails to stop and one damper fails to close during an ABI emergency. | Fan: Spurious operation, ABI or RAD detection high temperature signal failure, hot short in control wiring. Operator error (handswitch placed in wrong position).<br><br>Damper: Mechanical failure, control wiring or contact failures. Handswitch failure to spring return from open to A-Auto. | Indicating lights in MCR for Fan 1A running indicating lights in MCR for damper. | Increased in-leakage within the ABSCE.<br><br>Potential loss of the required negative pressure level within the ABSCE. Potential loss of duct/damper pressure integrity. | None. See Remarks. | 1.Supply fan is not safety- related but is required to stop running during a DBE.<br><br>2.The fan and isolation dampers separately receive independently trained ABI or RAD detection signals.<br><br>3.If the additional in-leakage through the fan/damper disturbs the system to a point that one ABGTS filtration unit cannot maintain the design negative pressure level, the standby ABGTS filtration unit will start in order to handle the additional in-leakage and to maintain the required negative pressure level.<br><br>4.Pressure differential across the duct/damper assembly is acceptable.<br><br>5. The spurious operation of the supply fans and failure of one damper will not affect the safe shutdown of the plant, in accordance with analyses and test results. |
| | | | Fan fails to stop with one safety-related isolation damper failed open during the minimum outside design conditions. | Same as above, plus the non-safety building heating system is not operating. | Same as above. | AB air intake room temperature may reach the minimum outside design temperature of 13°F | None. (See Remarks). | An analysis has shown that the low temperature condition inside the AB air intake room would have no adverse impact on the ability of the plant to cope with an accident situation. |

**Table 9.4-8 Failure Modes and Effects Analysis for Active Failures Subsystem: Auxiliary Building General Ventilation (Sheet 2 of 11)**

| Item No. | Component Identification | Function | Failure Mode | Potential Cause | Method of Detection | Effect on System | Effect on Plant | Remarks |
|---|---|---|---|---|---|---|---|---|
| 2 | 1-FAN-30-103<br><br>Aux. Bldg. General Supply Fan 1A and ABGTS Exhaust Fan A-A or B-B | Supply fan to stop and to remain stopped during DBE's. To prevent flow of supply air to the Aux. Bldg. by stopping on an ABI signal. ABGTS Fan operates to maintain a negative pressure in the ABSCE relative to the outside environment. | Supply fan fails to stop; spuriously operates. One ABGTS fan fails to start or fails to run. | For Supply Fan: spurious operation, ABI or RAD detection high temperature signal failure, hot short in control wiring. Operator error (handswitch placed in wrong position).<br><br>For ABGTS Fan: Mechanical failure, train power failure, train signal failure. | Indicating lights in the MCR. | Increase in in-leakage within the ABSCE.<br><br>Potential loss of the required negative pressure level within the ABSCE. Loss of redundancy in the ABGTS. | None. See Remarks. | 1.Supply fan is not safety- related but is required to stop running during a DBE. Therefore, the only failure having a potential effect on the safety functions of the Aux. Bldg. HVAC system is spurious operation or failure to stop.<br><br>2.Supply fan failure concurrent with an ABGTS failure during a LOCA and FHA has been determined not to be credible. In addition, an analysis has shown that ABGTS safety functions will not be impeded by failures in ABI signals or spurious actuation of AB general supply fans.. |

**Table 9.4-8 Failure Modes and Effects Analysis for Active Failures Subsystem: Auxiliary Building General Ventilation (Sheet 3 of 11)**

| Item No. | Component Identification | Function | Failure Mode | Potential Cause | Method of Detection | Effect on System | Effect on Plant | Remarks |
|---|---|---|---|---|---|---|---|---|
| 3 | 2-FAN-30-105<br><br>Aux. Bldg. General Supply Fan 2B and associated isolation Dampers 2-FCO-30-21, -22, -108, -109. | Fan to stop and remain stopped during DBE's. Dampers to close and remain closed during DBE's to prevent flow of supply air to the Aux. Bldg. after an ABI signal. | Fan fails to stop and one damper fails to close during an ABI emergency. | Fan: Spurious operation, ABI or RAD detection high temperature signal failure, hot short in control wiring. Operator error (handswitch placed in wrong position).<br><br>Damper: Mechanical failure, control wiring or contact failures. Handswitch failure to spring return from open to A-Auto. | Indicating lights in MCR for Fan 2B running indicating lights in MCR for damper. | Increased in-leakage within the ABSCE.<br><br>Potential loss of the required negative pressure level within the ABSCE. Potential loss of duct/damper pressure integrity. | None. See Remarks. | 1.Supply fan is not safety- related but is required to stop running during a DBE.<br><br>2.The fan and isolation dampers separately receive independently trained ABI or RAD detection signals.<br><br>3.If the additional in-leakage through the fan/damper disturbs the system to a point that one ABGTS filtration unit cannot maintain the design negative pressure level, the standby ABGTS filtration unit will start in order to handle the additional in-leakage and to maintain the required negative pressure level.<br><br>4.Pressure differential across the duct/damper assembly is acceptable.<br><br>5. The spurious operation of the supply fans and failure of one damper will not affect the safe shutdown of the plant, in accordance with analyses and test results. |
| | | | Fan fails to stop with one safety-related isolation damper failed open during the minimum outside design conditions | Same as above, plus the non-safety building heating system is not operating. | Same as above. | AB air intake room temperature may reach the minimum outside design temperature of 13°F | None. (See Remarks). | An analysis has shown that the low temperature condition inside the AB air intake room would have no adverse impact on the ability of the plant to cope with an accident situation. |

**Table 9.4-8 Failure Modes and Effects Analysis for Active Failures Subsystem: Auxiliary Building General Ventilation (Sheet 4 of 11)**

| Item No. | Component Identification | Function | Failure Mode | Potential Cause | Method of Detection | Effect on System | Effect on Plant | Remarks |
|---|---|---|---|---|---|---|---|---|
| 4 | 2-FAN-30-105<br><br>Aux. Bldg. General Supply Fan 2B and ABGTS Exhaust Fan A-A or B-B | Supply fan to stop and to remain stopped during DBE's. To prevent flow of supply air to the Aux. Bldg. by stopping on an ABI signal. ABGTS Fan operates to maintain a negative pressure in the ABSCE relative to the outside environment. | Supply fan fails to stop; spuriously operates. One ABGTS fan fails to start or fails to run. | For Supply Fan: spurious operation. ABI or RAD detection high temperature signal failure, hot short in control wiring. Operator error (handswitch placed in wrong position).<br><br>For ABGTS Fan: Mechanical failure, train power failure, train signal failure. | Indicating lights in the MCR. | Increase in in-leakage within the ABSCE.<br><br>Potential loss of the required negative pressure level within the ABSCE. Loss of redundancy in the ABGTS. | None. See Remarks. | 1.Supply fan is not safety- related but is required to stop running during a DBE. Therefore, the only failure having a potential effect on the safety functions of the Aux. Bldg. HVAC system is spurious operation or failure to stop.<br><br>2.Supply fan failure concurrent with an ABGTS failure during a LOCA or FHA has been determined not to be credible. Also, see remark No. 2 for Item 2. |

**Table 9.4-8 Failure Modes and Effects Analysis for Active Failures Subsystem: Auxiliary Building General Ventilation (Sheet 5 of 11)**

| Item No. | Component Identification | Function | Failure Mode | Potential Cause | Method of Detection | Effect on System | Effect on Plant | Remarks |
|---|---|---|---|---|---|---|---|---|
| 5 | 1-FAN-30-102<br><br>Aux. Bldg. General Supply Fan 1B and associated isolation Dampers 1-FCO-30-86, -87, -106 and -107 | Fan to stop and remain stopped during DBE's. Dampers to close and remain closed during DBE's to prevent flow of supply air to the Aux. Bldg. after an ABI signal. | Fan fails to stop and one damper fails to close during an ABI emergency. | Fan: Spurious operation, ABI or RAD detection high temperature signal failure, hot short in control wiring. Operator error (handswitch placed in wrong position).<br><br>Damper: Mechanical failure, control wiring or contact failures. Handswitch failure to spring return from open to A-Auto. | Indicating lights in MCR for Fan 1B running indicating lights in MCR for damper. | Increased in-leakage within the ABSCE.<br><br>Potential loss of the required negative pressure level within the ABSCE. Potential loss of duct/damper pressure integrity. | None. See Remarks. | 1.Supply fan is not safety- related but is required to stop running during a DBE.<br><br>2.The fan and isolation dampers separately receive independently trained ABI or RAD detection signals.<br><br>3.If the additional in-leakage through the fan/damper disturbs the system to a point that one ABGTS filtration unit cannot maintain the design negative pressure level, the standby ABGTS filtration unit will start in order to handle the additional in-leakage and to maintain the required negative pressure level.<br><br>4.Pressure differential across the duct/damper assembly is acceptable.<br><br>5. The spurious operation of the supply fans and failure of one damper will not affect the safe shutdown of the plant, in accordance with analyses and test results. |
| | | | Fan fails to stop with one safety-related isolation damper failed open during the minimum outside design conditions | Same as above, plus the non-safety building heating system is not operating. | Same as above. | AB air intake room temperature may reach the minimum outside design temperature of 13°F | None. (See Remarks). | An analysis has shown that the low temperature condition inside the AB air intake room would have no adverse impact on the ability of the plant to cope with an accident situation. |

**Table 9.4-8 Failure Modes and Effects Analysis for Active Failures Subsystem: Auxiliary Building General Ventilation (Sheet 6 of 11)**

| Item No. | Component Identification | Function | Failure Mode | Potential Cause | Method of Detection | Effect on System | Effect on Plant | Remarks |
|---|---|---|---|---|---|---|---|---|
| 6 | 1-FAN-30-102<br><br>Aux. Bldg. General Supply Fan 1B and ABGTS Exhaust Fan A-A or B-B | Supply fan to stop and to remain stopped during DBE's. To prevent flow of supply air to the Aux. Bldg. by stopping on an ABI signal. ABGTS Fan operates to maintain a negative pressure in the ABSCE relative to the outside environment. | Supply fan fails to stop; spuriously operates. One ABGTS fan fails to start or fails to run. | For Supply Fan: spurious operation. ABI or RAD detection high temperature signal failure, hot short in control wiring. Operator error (handswitch placed in wrong position).<br><br>For ABGTS Fan: Mechanical failure, train power failure, train signal failure. | Indicating lights in the MCR. | Increase in in-leakage within the ABSCE.<br><br>Potential loss of the required negative pressure level within the ABSCE. Loss of redundancy in the ABGTS. | None. See Remarks. | 1.Supply fan is not safety- related but is required to stop running during a DBE. Therefore, the only failure having a potential effect on the safety functions of the Aux. Bldg. HVAC system is spurious operation or failure to stop.<br><br>2.Supply fan failure concurrent with an ABGTS failure during a LOCA or FHA has been determined not to be credible. Also, see remark No. 2 for Item 2. |

**Table 9.4-8 Failure Modes and Effects Analysis for Active Failures Subsystem: Auxiliary Building General Ventilation (Sheet 7 of 11)**

| Item No. | Component Identification | Function | Failure Mode | Potential Cause | Method of Detection | Effect on System | Effect on Plant | Remarks |
|---|---|---|---|---|---|---|---|---|
| 7 | 2-FAN-30-104<br><br>Aux. Bldg. General Supply Fan 2A and associated isolation Dampers 2-FCO-30-21, -22, -108 and -109 | Fan to stop and remain stopped during DBE's. Dampers to close and remain closed during DBE's to prevent flow of supply air to the Aux. Bldg. after an ABI signal. | Fan fails to stop and one damper fails to close during an ABI emergency. | Fan: Spurious operation, ABI or RAD detection high temperature signal failure, hot short in control wiring. Operator error (handswitch placed in wrong position).<br><br>Damper: Mechanical failure, control wiring or contact failures. Handswitch failure to spring return from open to A-Auto. | Indicating lights in MCR for Fan 2A running indicating lights in MCR for damper. | Increased in-leakage within the ABSCE.<br><br>Potential loss of the required negative pressure level within the ABSCE. Potential loss of duct/damper pressure integrity. | None. See Remarks. | 1.Supply fan is not safety- related but is required to stop running during a DBE.<br><br>2.The fan and isolation dampers separately receive independently trained ABI or RAD detection signals.<br><br>3.If the additional in-leakage through the fan/damper disturbs the system to a point that one ABGTS filtration unit cannot maintain the design negative pressure level, the standby ABGTS filtration unit will start in order to handle the additional in-leakage and to maintain the required negative pressure level.<br><br>4.Pressure differential across the duct/damper assembly is acceptable.<br><br>5. The spurious operation of the supply fans and failure of one damper will not affect the safe shutdown of the plant, in accordance with analyses and test results. |
| | | | Fan fails to stop with one safety-related isolation damper failed open during the minimum outside design conditions | Same as above, plus the non-safety building heating system is not operating. | Same as above. | AB air intake room temperature may reach the minimum outside design temperature of 13°F | None. (See Remarks). | An analysis has shown that the low temperature condition inside the AB air intake room would have no adverse impact on the ability of the plant to cope with an accident situation. |

**Table 9.4-8 Failure Modes and Effects Analysis for Active Failures Subsystem: Auxiliary Building General Ventilation (Sheet 8 of 11)**

| Item No. | Component Identification | Function | Failure Mode | Potential Cause | Method of Detection | Effect on System | Effect on Plant | Remarks |
|---|---|---|---|---|---|---|---|---|
| 8 | 2-FAN-30-104<br><br>Aux. Bldg. General Supply Fan 2A and ABGTS Exhaust Fan A-A or B-B | Supply fan to stop and to remain stopped during DBE's. To prevent flow of supply air to the Aux. Bldg. by stopping on an ABI signal. ABGTS Fan operates to maintain a negative pressure in the ABSCE relative to the outside environment. | Supply fan fails to stop; spuriously operates. One ABGTS fan fails to start or fails to run. | For Supply Fan: spurious operation. ABI or RAD detection high temperature signal failure, hot short in control wiring. Operator error (handswitch placed in wrong position).<br><br>For ABGTS Fan: Mechanical failure, train power failure, train signal failure. | Indicating lights in the MCR. | Increase in in-leakage within the ABSCE.<br><br>Potential loss of the required negative pressure level within the ABSCE. Loss of redundancy in the ABGTS. | None. See Remarks. | 1.Supply fan is not safety- related but is required to stop running during a DBE. Therefore, the only failure having a potential effect on the safety functions of the Aux. Bldg. HVAC system is spurious operation or failure to stop.<br><br>2.Supply fan failure concurrent with an ABGTS failure during a LOCA or FHA has been determined not to be credible. Also, see remark No. 2 for Item 2. |
| 9 | 1-FAN-30-159<br><br>Aux. Bldg. General Exhaust Fan 1A and associated isolation Dampers 1-FCO-30-160,-161 | Fan to stop and remain stopped during DBE's. Dampers to close and remain closed during DBE's to prevent flow of unfiltered exhaust air from Aux. Bldg. to outside, after an ABI signal. | One damper fails to close during an ABI emergency. (exhaust fan is shutdown see remark 1). | Damper: Mechanical failure, control wiring or contact failures. Handswitch failure to spring return from open to A-Auto. | Indicating lights in MCR for dampers. | None. See remarks. | None. See Remarks. | 1.Exhaust fan is not safety- related but is required to stop running during a DBE. Fan motor is equipped with safety-related redundant breakers.<br><br>2.The fan and isolation dampers separately receive independently trained ABI or RAD detection signals.<br><br>3. Ventilation space maintained below outside pressure. Reverse flow through operable (closed) damper prevents release by fan flow path. |

**Table 9.4-8 Failure Modes and Effects Analysis for Active Failures Subsystem: Auxiliary Building General Ventilation (Sheet 9 of 11)**

| Item No. | Component Identification | Function | Failure Mode | Potential Cause | Method of Detection | Effect on System | Effect on Plant | Remarks |
|---|---|---|---|---|---|---|---|---|
| 10 | 2-FAN-30-274<br><br>Aux. Bldg. General Exhaust Fan 2A and associated dampers 2-FCO-30-271, -272 | Fan to stop and remain stopped during DBE's. Dampers to close and remain closed during DBE's to prevent flow of unfiltered exhaust air from the Aux. Bldg. to outside, after an ABI signal. | One damper fails to close during an ABI emergency. (Exhaust fan is shutdown see remark 1). | Damper: Mechanical failure, control wiring or contact failures. Handswitch failure to spring return from open to A-Auto. | Indicating lights in MCR for dampers. | None. See remarks. | None. See Remarks. | 1.Exhaust fan is not safety- related but is required to stop running during a DBE. Fan motor is equipped with safety-related redundant breakers.<br><br>2.The fan and isolation dampers separately receive independently trained ABI or RAD detection signals.<br><br>3. Venitilation space maintained below outside pressure. Reverse flow through operable (closed) damper prevents relaease by fan flow path. |
| 11 | 1-FAN-30-162<br><br>Aux. Bldg. General Exhaust Fan 1B and associated dampers 1-FCO-30-166, -167 | Fan to stop and remain stopped during DBE's. Dampers to close and remain closed during DBE's to prevent flow of unfiltered exhaust air from the Aux. Bldg. to outside, after an ABI signal. | One damper fails to close during an ABI emergency. (Exhaust fan is shutdown see remarks). | Damper: Mechanical failure, control wiring or contact failures. Handswitch failure to spring return from open to A-Auto. | Indicating lights in MCR for damper. | None. See remarks. | None. See Remarks. | 1.Exhaust fan is not safety- related but is required to stop running during a DBE. Fan motor is equipped with safety-related redundant breakers.<br><br>2.The fan and isolation dampers separately receive independently trained ABI or RAD detection signals.<br><br>3. Ventilation space maintained below outside pressure. Reverse flow through operable (closed) damper prevents release by fan flow path. |

**Table 9.4-8 Failure Modes and Effects Analysis for Active Failures Subsystem: Auxiliary Building General Ventilation (Sheet 10 of 11)**

| Item No. | Component Identification | Function | Failure Mode | Potential Cause | Method of Detection | Effect on System | Effect on Plant | Remarks |
|---|---|---|---|---|---|---|---|---|
| 12 | 2-FAN-30-278<br><br>Aux. Bldg. General Exhaust Fan 2B and associated dampers 2-FCO-30-275, -276 | Fan to stop and remain stopped during DBE's. Dampers to close and remain closed during DBE's to prevent flow of unfiltered exhaust air from the Aux. Bldg. to outside, after an ABI signal. | One damper fails to close during an ABI emergency. (Exhaust fan is shutdown see remark 1). | Damper: Mechanical failure, control wiring or contact failures. Handswitch failure to spring return from open to A-Auto. | Indicating lights in the MCR. | None. See remarks. | None. See Remarks. | 1.Exhaust fan is not safety- related but is required to stop running during a DBE. Fan motor is equipped with safety-related redundant breakers.<br><br>2.The fan and isolation dampers separately receive independently trained ABI or RAD detection signals.<br><br>3. Ventilation space maintained below outside pressure. Reverse flow through operable (closed) damper prevents release by fan flow path. |
| 13 | 0-FAN-30-136<br><br>Fuel Handling Area Exhaust Fan A-A and associated dampers 0-FCO-30-137, -138 | Fan to stop and remain stopped during DBE's. Dampers to close and remain closed during DBE's to prevent flow of unfiltered exhaust air from the Aux. Bldg. to outside, after an ABI signal. | One damper fails to close during an ABI emergency. (Exhaust fan is shutdown see remark 1). | Damper: Mechanical failure, control wiring or contact failures. Handswitch failure to spring return from open to A-Auto. | Indicating lights in the MCR. | None. See remarks. | None. See Remarks. | 1.Exhaust fan is not safety- related but is required to stop running during a DBE. Fan motor is equipped with safety-related redundant breakers.<br><br>2.The fan and isolation dampers separately receive independently trained ABI or RAD detection signals.<br><br>3. Ventilation space maintained below outside pressure. Reverse flow through operable (closed) damper prevents release by fan flow path. |

**Table 9.4-8 Failure Modes and Effects Analysis for Active Failures Subsystem: Auxiliary Building General Ventilation (Sheet 11 of 11)**

| Item No. | Component Identification | Function | Failure Mode | Potential Cause | Method of Detection | Effect on System | Effect on Plant | Remarks |
|---|---|---|---|---|---|---|---|---|
| 14 | 0-FAN-30-139<br><br>Fuel Handling Area Exhaust Fan B-B and associated dampers 0-FCO-30-140, -141 | Fan to stop and remain stopped during DBE's. Dampers to close and remain closed during DBE's to prevent flow of unfiltered exhaust air from the Aux. Bldg. to outside, after an ABI signal. | One damper fails to close during an ABI emergency. (Exhaust fan is shutdown see Remark 1). | Damper: Mechanical failure, control wiring or contact failures. Handswitch failure to spring return from open to A-Auto. | Indicating lights in the MCR for damper. | None. See remarks. | None. See Remarks. | 1.Exhaust fan is not safety- related but is required to stop running during a DBE. Fan motor is equipped with safety-related redundant breakers.<br><br>2.The fan and isolation dampers separately receive independently trained ABI or RAD detection signals.<br><br>3. Ventilation space maintained below outside pressure. Reverse flow through operable (closed) damper prevents release by fan flow path. |

**Table 9.4-8A Failure Modes And Effects Analysis for Active Failures for Components Common to the Aux Bldg Hvac Subsystem (Sheet 1 of 2)**

| Item No. | Component | Function | Failure Mode | Potential Cause | Method of Detection | Effect on System | Effect on Plant | Remarks |
|---|---|---|---|---|---|---|---|---|
| 1 | Auxiliary Building Isolation (ABI) signal Train A. | Deenergizes solenoid valves to close associated dampers; stops AB general ventilation fans; starts various ESF room coolers. | Signal fails. | Train A vital ac bus failure; Relay VKA 1 failure; Train A initiating signal (Phase A containment isolation, high rad in refueling area) failure. | MCR indiation of only one train of ABGTS fan starting and one train of ABSCE dampers closing. | Loss of redundancy in ABSCE isolation and ESF coolers actuation. | None. (See Remarks) | Train A and Train B ABI initiating signals are derived from independent (train separated) qualified devices.<br><br>Either train signal will stop all general supply and exhaust fans, and fuel handling area exhaust fans. An analysis has shown that the failure of an ABI signal will not have an adverse effect on the ABGTS safety function. |
| | | | Spurious signal. | Operator error, spurious initiating signal (initiating signals listed above.) | None. | Unnecessary isolation of ABSCE, initiation of ESF coolers and startup of ABGTS. | None. (See Remarks) | |
| 2 | Auxiliary Building Isolation (ABI) signal Train B. | Deenergizes solenoid valves to close associated dampers; stops AB general ventilation fans; starts various ESF room coolers. | Signal fails. | Train B vital ac bus failure; Relay VKB1 failure; Train B initiating signal (Phase A containment isolation, high rad in refueling area) failure. | MCR indiation of only one train of ABGTS fan starting and one train of ABSCE dampers closing. | Loss of redundancy in ABSCE isolation and ESF coolers actuation. | None. (See Remarks) | Train A and Train B ABI initiating signals are derived from independent (train separated) qualified devices.<br><br>Either train signal will stop all general supply and exhaust fans, and fuel handling area exhaust fans. An analysis has shown that the failure of an ABI signal will not have an adverse effect on the ABGTS safety function. |
| | | | Spurious signal. | Operator error, spurious initiating signal (initiating signals listed above.) | None. | Unnecessary isolation of ABSCE, initiation of ESF coolers and startup of ABGTS. | None. (See Remarks) | |

**Table 9.4-8A Failure Modes And Effects Analysis for Active Failures for Components Common to the Aux Bldg Hvac Subsystem (Sheet 2 of 2)**

| Item No. | Component | Function | Failure Mode | Potential Cause | Method of Detection | Effect on System | Effect on Plant | Remarks |
|---|---|---|---|---|---|---|---|---|
| 3 | Train A Emergency Power. | Provides Class 1E diesel-backed power supply to active components of Train A of AB HVAC subsystems. | Loss of or inadequate voltage. | Diesel generator failure; bus fault (Train A); Operator error. | Alarm and indication in MCR. | Loss of redundancy in safety-related HVAC system. | None. (See Remarks) | Redundant Train B HVAC system available. |
| 4 | Train B Emergency Power. | Provides Class 1E diesel-backed power supply to active components of Train B of AB HVAC subsystems. | Loss of or inadequate voltage | Diesel generator failure; bus fault (Train B); Operator error. | Alarm and indication in MCR. | Loss of redundancy in safety-related HVAC system. | None. (See Remarks) | Redundant Train A HVAC system available. |

**Table 9.4-8B Failure Modes and Effects Analysis for Auxiliary Building HVAC Subsystem Passive Failures (Sheet 1 of 2)**

| Item No. | Component | Function | Failure Mode | Potential Cause | Method of Detection | Effect on System | Effect on Plant | Remarks |
|---|---|---|---|---|---|---|---|---|
| 1 | Intake opening (one for each of two dampers in each Transformer Room). | Provides air supply intake to 480V Transformer Room 1A, 1B, 2A, and 2B. | Blockage | Mechanical Failure. Foreign Object. | ---------- | Loss of Redundancy in providing air supply. | None. (See Remarks) | Redundant intake opening will supply sufficient air to the room |
| 2 | Refrigerant Piping and Valves for Chiller or Condensing Unit | Provides flowpath for refrigerant from Chiller to AHU and back to Chiller. | Leakage | Cracks | No direct indication of leakage. | Loss of effectiveness of one Chiller and associated AHUs redundant loop. Opposite Train Chiller and AHUs are independent and remain available. | None. (See Remarks) | Redundant Chillers and AHUs are provided. |
| 3 | Fire Dampers | Close in the event of fire. | Spuriously closes. | See Remarks | See Remarks | None. (See Remarks) | None. (See Remark #2.) | 1.Double fusible links will prevent spurious closure..<br><br>2.An analysis has shown that fire dampers have no identifiable realistic failure mechanisms as passive components.<br><br>3.Single active failure is not postulated per WB-DC-40-64 “Design Basis Events Design Criteria.” |
| | | | Fails to close | See Remarks | See Remarks | None. (See Remarks) | None. (See Remarks) | Fire Protection Report postulates no failures other than those directly attributable to the fire. |

**Table 9.4-8B Failure Modes and Effects Analysis for Auxiliary Building HVAC Subsystem Passive Failures (Sheet 2 of 2)**

| Item No. | Component | Function | Failure Mode | Potential Cause | Method of Detection | Effect on System | Effect on Plant | Remarks |
|---|---|---|---|---|---|---|---|---|
| 4 | Ductwork in the Auxiliary Building Gen. Vent and A/C subsystems | Provides containment for air flow path and controlled distribution and exhausting of cooling/ventilating air. | Leakage | Cracks | ---------- | Minimal localized reduction of negative pressure and minimized effect on temperature of areas. | None | Only small cracks are postulated due to seismic qualification of ductwork. Most of air leaking from flow path will enter the areas for which it is intended.<br><br>Loss of fluid (air) is not a concern since the system is in the same fluid. |

**Table 9.4-9 Failure Modes and Effects Analysis Subsystem: Shutdown Board Room Air Conditioning and Ventilation (Sheet 1 of 26)**

| Item No. | Component | Function | Failure Mode | Potential Cause | Method of Detection | Effect on System | Effect on Plant | Remarks |
|---|---|---|---|---|---|---|---|---|
| 1 | 0-CHR-31-36/2-A<br><br>Chilled Water Package A-A (Train A) | Provides chilled water to Train A AHUs. | Fails to start; Fails while running. | Mechanical failure; Train A power failure; Control signal failure from 0-PDIS-31-101-A; 0-FS-31-43-A; 0-FS-31-38-A; 0-TS-31-40B-A; and O-TS-31-48B-A. | Annunciator of Shutdown Board Room HVAC System A-A Abnormal. Indicating lights in MCR (0-HS-31-400A). Compressor running light on MCC. | (See Remarks) | None<br><br>(See Remarks) | 1. Equipment includes CW pump and motor and compressor and motor.<br><br>2. Control of the CWCP, 0-PMP-31-36/1-A, and AHUs A-A and B-A is interlocked with Chiller A-A.<br>3. The system design intent is such that loss of one chiller results only in the loss of redundancy in providing chilled water for cooling Unit 1 and Unit 2 Shutdown Board Rooms. The redundant train chiller serves AHUs C-B and D-B. Chiller A-A will stop automatically and Chiller B-B will start automatically on:<br><br>■ Low DP at Circulating Water Cooling Pump for Chiller A-A.<br>■ T > Setpoint at air inlet to Train A AHUs.<br>■ Low air flow at AHU A-A or B-A.<br><br>4. The switchover to the standby chiller uses separation relays in a non-divisional Train A associated power supply. |

**Table 9.4-9 Failure Modes and Effects Analysis Subsystem: Shutdown Board Room Air Conditioning and Ventilation (Sheet 2 of 26)**

| Item No. | Component | Function | Failure Mode | Potential Cause | Method of Detection | Effect on System | Effect on Plant | Remarks |
|---|---|---|---|---|---|---|---|---|
| 1 (cont | 0-CHR-31-36/2-A<br><br>Chilled Water Package A-A (Train A) (cont'd) | | Reduction of cooling capacity | Loss of refrigerant; Chiller freeze up; Control signal failure. | Inlet temperature indication on L-551 or L-538 for AHU air intake in 6.9 kV Shutdown Board Room.<br><br>See remark #1. | Loss of redundancy in cooling air flow.<br><br>See remark #3. | None, (See remarks) | |
| 2 | 0-CHR-31-49/2-B<br><br>Chilled Water Package B-B (Train B) | Provides chilled water to Train B AHUs. | Fails to start; Fails while running | Mechanical failure; Train B power failure; Control signal failure from 0-PDIS-31-131-B, 0-FS-31-51-B, 0-FS-31-57-B, 0-TS-31-60B-B, 0-TS-31-52B-B. | Annunciation of Shutdown Board Room Hvac System B-B Abnormal. Indicating lights in MCR (0-HS-31-49A). Compressor running light on MCC. | Loss of Redundancy | None, See remark #3 | 1. Equipment includes CW pump & motor and compressor & motor.<br>2. Control of the CWCP, 0-PMP-31-49/1-B, and AHUs C-B and D-B is interlocked with Chiller B-B.<br>3. The system design intent is such that loss of one chiller results only in the loww of redundancy in providing chilled water for cooling Unit 1 and Unit 2 Shutdown Board Rooms. The redundant train dchiller seves AHUs A-A and B-A. Chiller B-B will stop automatically and Chiller A-A will start automatically on:<br>▪ Low DP at Circulating Water Cooling Pump for Chiller B-B.<br>▪ T > Setpoint at air inlet to Train B AHUs.<br>▪ Low air flow at AHU C-B or D-B.<br>4. The switchover to the standby chiller uses separation relays in a non-divisional Train A associated power supply. |

**Table 9.4-9 Failure Modes and Effects Analysis Subsystem: Shutdown Board Room Air Conditioning and Ventilation (Sheet 3 of 26)**

| Item No. | Component | Function | Failure Mode | Potential Cause | Method of Detection | Effect on System | Effect on Plant | Remarks |
|---|---|---|---|---|---|---|---|---|
| 2 (cont | 0-CHR-31-49/2-B<br><br>Chilled Water Package B-B (Train B) (cont'd) | | Reduction of cooling capacity. | Loss of refrigerant; chiller freeze up; Control signal failure. | Inlet temperature indication on L-540 or L-537 for AHU air intake in 6.9 kV Shutdown Board Room. | Loss of redundancy in cooling air flow. | None, (See remarks) | |

**Table 9.4-9 Failure Modes and Effects Analysis Subsystem: Shutdown Board Room Air Conditioning and Ventilation (Sheet 4 of 26)**

| Item No. | Component | Function | Failure Mode | Potential Cause | Method of Detection | Effect on System | Effect on Plant | Remarks |
|---|---|---|---|---|---|---|---|---|
| 3 | 0-AHU-31-45<br><br>Air Handling Unit A-A (Train A) | Provides cooling air to maintain required temperatures for Shutdown Board Rooms safety-related equipment on the Unit 1 side. | Fails to start; Fails while running. | Mechanical Failure; Train A power failure. Control signal failure; sensing failure for 0-TS-31-40A or 0-TS-31-48A | Annunciation of Shutdown Board Room HVAC System A-A Abnormal. Indicating lights in MCR (0-HS-31-400A-A). AHU A-A running light on MCC. | Loss of redundancy in cooling air to Unit 1 side Shutdown Board rooms. | None. Redundant Train B Chiller B-B and AHU C-B on Unit 1 side will automatically start on:<br>■ Low DP at Circulating Chilled Water Pump.<br>■ Low Air flow at AHU A-A<br>or<br>■ T > Setpoint at inlet to Train A AHU. | Review of the schematics establishes that the AHUs A-A and C-B (on Unit 1 side) are independent.<br><br>AHU A-A is interlocked to automatically start on Chiller A-A start.<br><br>Either train of AHUs (Train A AHUs A-A and B-A or Train B AHUs C-B and D-B) is capable of providing cooling air to the Aux. Control Room. |
| | | | Fails to stop or starts while unit C-B is operating. | Electrical Failure | Annunciation in the MCR. | Increased pressure in supply duct. | None (See Remarks) | When both Air Handling Units are operating the common ductwork static pressure does not exceed 6 in. wg. duct design pressure. |

**Table 9.4-9 Failure Modes and Effects Analysis Subsystem: Shutdown Board Room Air Conditioning and Ventilation (Sheet 5 of 26)**

| Item No. | Component | Function | Failure Mode | Potential Cause | Method of Detection | Effect on System | Effect on Plant | Remarks |
|---|---|---|---|---|---|---|---|---|
| 4 | 0-AHU-31-44<br><br>Air Handling Unit B-A (Train A) | Provides cooling air to maintain required temperatures for Shutdown Board Rooms Safety-related equipment on the Unit 2 side. | Fails to start; Fails while running. | Mechanical Failure; Train A power failure; control signal failure; sensing failure for 0-TS-31-40A or 0-TS-31-48A. | Annunciation of Shutdown Board Room HVAC System A-A Abnormal. Indicating lights in MCR (0-HS-31-400A-A). AHU B-A running light on MCC. | Loss of redundancy in cooling air to Unit 2 side Shutdown Board rooms. | None. Redundant Train B Chiller B-B and AHU D-B on Unit 2 side will automatically start on:<br>▪ Low DP at Circulating Chilled Water Pump.<br>▪ Low Air flow at AHU B-A<br>or<br>▪ T > Setpoint at inlet to Train A AHU. | Review of the schematics establishes that the AHUs B-A and D-B (on Unit 2 side) are independent.<br><br>AHU B-A is interlocked to automatically start on Chiller A-A start.<br><br>Either train of AHUs (Train A AHUs A-A and B-A or Train B AHUs C-B and D-B) is capable of providing cooling air to the Aux. Control Room. |
| | | | Fails to stop or starts while unit D-B is operating. | Electrical Failure | Annunciation in the MCR. | Increased pressure in supply duct. | None (See Remarks) | When both Air Handling Units are operating, the common ductwork static pressure does not exceed 6 in. wg. duct design pressure. |

**Table 9.4-9 Failure Modes and Effects Analysis Subsystem: Shutdown Board Room Air Conditioning and Ventilation (Sheet 6 of 26)**

| Item No. | Component | Function | Failure Mode | Potential Cause | Method of Detection | Effect on System | Effect on Plant | Remarks |
|---|---|---|---|---|---|---|---|---|
| 5 | 0-AHU-31-55<br><br>Air Handling Unit C-B (Train B) | Provides cooling air to maintain required temperatures for Shutdown Board Rooms safety-related equipment on the Unit 1 side. | Fails to start; Fails while running. | Mechanical Failure; Train B power failure. Control signal failure; sensing failure for 0-TS-31-52A or 0-TS-31-60A | Annunciation of Shutdown Board Room HVAC System B-B Abnormal. Indicating lights on MCR (0-HS-31-49A-B). AHU C-B running light on MCC. | Loss of redundancy in cooling air to Unit 1 side Shutdown Board rooms. | None. Redundant Train A Chiller A-A and AHU A-A on Unit 1 side will automatically start on:<br>▪ Low DP at Circulating Chilled Water Pump.<br>▪ Low Air flow at AHU C-B<br>or<br>▪ T > Setpoint at inlet to Train B AHU. | Review of the schematics establishes that the AHUs A-A and C-B (on Unit 1 side) are independent.<br><br>AHU C-B is interlocked to automatically start on Chiller B-B start.<br><br>Either train of AHUs (Train A AHUs A-A and B-A or Train B AHUs C-B and D-B) is capable of providing cooling air to the Aux. Control Room. |
| | | | Fails to stop or starts while unit A-A is operating. | Electrical Failure | Annunciation in the MCR. | Increased pressure in supply duct. | None (See Remarks) | When both Air Handling Units are operating, the common ductwork static pressure does not exceed 6 in. wg. duct design pressure. |

**Table 9.4-9 Failure Modes and Effects Analysis Subsystem: Shutdown Board Room Air Conditioning and Ventilation (Sheet 7 of 26)**

| Item No. | Component | Function | Failure Mode | Potential Cause | Method of Detection | Effect on System | Effect on Plant | Remarks |
|---|---|---|---|---|---|---|---|---|
| 6 | 0-AHU-31-61<br><br>Air Handling Unit D-B (Train B) | Provides cooling air to maintain required temperatures for Shutdown Board Rooms safety-related equipment on the Unit 2 side. | Fails to start; Fails while running. | Mechanical Failure; Train B power failure; control signal failure; sensing failure for 0-TS-31-52A or 0-TS-31-60A | Annunciation of Shutdown Board Room HVAC System B-B Abnormal. Indicating lights in MCR (0-HS-31-49A-B). AHU D-B running light on MCC. | Loss of redundancy in cooling air to Unit 2 side Shutdown Board rooms and 480V Shutdown Board Room Unit 2 side. | None. Redundant Train A Chiller A-A and AHU A-A on Unit 2 side will automatically start on:<br>▪ Low DP at Circulating Chilled Water Pump.<br>▪ Low Air flow at AHU D-B<br>or<br>▪ T > Setpoint at inlet to Train B AHU. | Review of the schematics establishes that the AHUs B-A and D-B (on Unit 2 side) are independent.<br><br>AHU D-B is interlocked to automatically start on Chiller B-B start.<br><br>Either train of AHUs (Train A AHUs A-A and B-A or Train B AHUs C-B and D-B) is capable of providing cooling air to the Aux. Control Room. |
| | | | Fails to stop or starts while unit A-A is operating. | Electrical Failure | Annunciation in the MCR. | Increased pressure in supply duct. | None (See Remarks) | When both Air Handling Units are operating, the common ductwork static pressure does not exceed 6 in. wg. duct design pressure. |

**Table 9.4-9 Failure Modes and Effects Analysis Subsystem: Shutdown Board Room Air Conditioning and Ventilation (Sheet 8 of 26)**

| Item No. | Component | Function | Failure Mode | Potential Cause | Method of Detection | Effect on System | Effect on Plant | Remarks |
|---|---|---|---|---|---|---|---|---|
| 7 | 0-PMP-31-36/1-A<br><br>Chilled Water Package A-A Cooling Water Circulating Pump | Provides water to the Water Chiller A-A loop. | Fails to start; Fails while running. | Mechanical failure; Train A power failure; Control signal failure; start signal failure; operator error (handswitch placed in wrong position). | Annunciator 2-113 for 0-PDIS-31-101-A. Indicating lights for 0-HS-31-400A in MCR.<br><br>Chilled water Temperature and Pressure indication on L-541. | Loss of redundancy in supplying cooling air to the Shutdown Board Rooms of both units. | None. Redundant Train B Chiller B-B will automatically start on Lo DP at the pump and will provide cooling water to AHUs C-B and D-B. | Control of 0-PMP-31-36/1-A is interlocked with Chiller A-A to automatically start after chiller start. Review of the control and schematic diagrams establishes the redundancy and independence of the Train A and Train B pumps. |
| 8 | 0-PMP-31-49/1-B<br><br>Chilled Water Package B-B Cooling Water Circulating Pump | Provides water for to the Water Chiller B-B loop. | Fails to start; Fails while running. | Mechanical failure; Train B power failure; Control signal failure; start signal failure; operator error (handswitch placed in wrong position). | Annunciator 2-120 for 0-PDIS-31-131-B. Indicator lights for 0-HS-31-49A in MCR.<br><br>Chilled Water Temperature and Pressure indication on L-542. | Loss of redundancy in supplying cooling air to the Shutdown Board Rooms of both units. | None. Redundant Train A Chiller A-A will automatically start on Lo DP at the pump and will provide cooling water to AHUs A-A and B-A. | 0-PMP-31-49/1-B is interlocked to automatically start after Chiller B-B start. Review of the control and schematic diagrams establishes the redundancy and independence of the Train A and Train B pumps. |

**Table 9.4-9 Failure Modes and Effects Analysis Subsystem: Shutdown Board Room Air Conditioning and Ventilation (Sheet 9 of 26)**

| Item No. | Component | Function | Failure Mode | Potential Cause | Method of Detection | Effect on System | Effect on Plant | Remarks |
|---|---|---|---|---|---|---|---|---|
| 9 | TCV-31-112<br><br>Temperature Control Valve for AHU A-A. | Provides control of water temperature to AHU A-A from Chiller A-A by regulating the flow of chilled water to AHU. | Spuriously bypass too much flow. | Mechanical failure; Control Air failure; Sensor failure. | See Remark #1. | Potential loss of redundancy of Train A Chiller A-A and AHU A-A resulting in air temperature rise in Shutdown Board Room. | None. Redundant Train B Chiller B-B and associated AHUs C-B and D-B can provide cooling air supply.<br><br>See Remark #2. | 1. Local indication on L-551 of inlet air temperature to AHU A-A.<br><br>2. Temp. rise in Shutdown rooms > Setpoint will automatically cause Train A Chiller with AHUs A-A and B-A to stop, and Train B with AHUs C-B and D-B to start.<br><br>3. The temperature control valves for the AHUs are served by the Aux. Air Supply. The trains are separate. |
| 10 | 0-TCV-31-108<br><br>Temperature Control Valve for AHU B-A. | Provides control of water temperature to AHU B-A from Chiller A-A by regulating the flow of chilled water to AHU. | Spuriously bypass too much flow. | Mechanical failure; Control Air failure; Sensor failure. | See Remark #1. | Potential loss of redundancy of Train A Chiller A-A and AHU B-A resulting in air temperature rise in Shutdown Board Room. | None. Redundant Train B Chiller B-B and associated AHUs C-B and D-B can provide cooling air supply.<br><br>See Remark #2. | 1. Local indication on L-538 of inlet air temperature to AHU B-A.<br><br>2. Temp. rise in Shutdown rooms > Setpoint will automatically cause Train A Chiller with AHUs A-A and B-A to stop, and Train B with AHUs C-B and D-B to start.<br><br>3. The temperature control valves for the AHUs are served by the Aux. Air Supply. The trains are separate. |

**Table 9.4-9 Failure Modes and Effects Analysis Subsystem: Shutdown Board Room Air Conditioning and Ventilation (Sheet 10 of 26)**

| Item No. | Component | Function | Failure Mode | Potential Cause | Method of Detection | Effect on System | Effect on Plant | Remarks |
|---|---|---|---|---|---|---|---|---|
| 11 | 0-TCV-31-142<br><br>Temperature Control Valve for AHU C-B. | Provides control of water temperature to AHU C-B from Chiller B-B by regulating the flow of chilled water to AHU. | Spuriously bypass too much flow. | Mechanical failure; Control Air failure; Sensor failure. | See Remark #1. | Potential loss of redundancy of Train B Chiller B-B and AHU C-B resulting in air temperature rise in Shutdown Board Room. | None. Redundant Train A Chiller A-A and associated AHUs A-A and B-A can provide cooling air supply.<br><br>See Remark #2. | 1. Local indication on L-537 of inlet air temperature to AHU C-B.<br><br>2. Temp. rise in Shutdown rooms > Setpoint will automatically cause Train B Chiller with AHUs C-B and D-B to stop and Train A with AHUs A-A and B-A to start.<br><br>3. The temperature control valves for the AHUs are served by the Aux. Air Supply. The trains are separate. |
| 12 | 0-TCV-31-138<br><br>Temperature Control Valve for AHU D-B. | Provides control of water temperature to AHU D-B from Chiller B-B by regulating the flow of chilled water to AHU. | Spuriously bypass too much flow. | Mechanical failure; Control Air failure; Sensor failure. | See Remark #1. | Potential loss of redundancy of Train B Chiller B-B and AHU D-B resulting in air temperature rise in Shutdown Board Room. | None. Redundant Train A Chiller A-A and associated AHUs A-A and B-A can provide cooling air supply.<br><br>See Remark #2. | 1. Local indication on L-540 of inlet air temperatures to AHU D-B.<br><br>2. Temp. rise in Shutdown rooms > Setpoint will automatically cause Train B Chiller with AHUs C-B and D-B to stop and Train A with AHUs A-A and B-A to start.<br><br>3. The temperature control valves for the AHUs are served by the Aux. Air Supply. The trains are separate. |

**Table 9.4-9 Failure Modes and Effects Analysis Subsystem: Shutdown Board Room Air Conditioning and Ventilation (Sheet 11 of 26)**

| Item No. | Component | Function | Failure Mode | Potential Cause | Method of Detection | Effect on System | Effect on Plant | Remarks |
|---|---|---|---|---|---|---|---|---|
| 13 | 0-BKD-31-2706<br><br>Backdraft Damper | Prevents backflow of cooling air through standby AHU C-B when AHU A-A is running. | Fails to backseat | Mechanical failure. | See Remarks<br><br>Local position indicators on the damper will indicate if damper is stuck open. | A) Loss of cooling air to room served by the AHU<br><br>B) Bypass flow through the standby unit can cause standby fan to rotate in reverse. Due to loss of cooling to room. Standby unit is required to start but may fail as a result of motor overload to overcome the reverse rotation.<br><br>C) This would result in the total loss of cooling air in the Shutdown Board Rooms | None. (See Remarks) | 1. Indirect indication of functional failure of AHU; MCR indication of AHU A-A and B-A motors running; local indication on L-551 of high inlet temp. to AHU A-A.<br><br>2. Operability of the dampers is periodically verified. |
| | | Provides flow path for air flow from AHU. | Fails to open (Stuck closed) when AHU C-B is running (Train B) | Mechanical failure. | See Remark #2. | Loss of redundancy in cooling air flow from Shutdown Board Room. | None.<br>Low flow from AHU will automatically initiate Train "A" chiller and AHUs. | 1. Normally opens when AHU is running.<br><br>2. Indirect indication of functional failure of AHU; local indication on L-537 of inlet temperature to AHU C-B. |

**Table 9.4-9 Failure Modes and Effects Analysis Subsystem: Shutdown Board Room Air Conditioning and Ventilation (Sheet 12 of 26)**

| Item No. | Component | Function | Failure Mode | Potential Cause | Method of Detection | Effect on System | Effect on Plant | Remarks |
|---|---|---|---|---|---|---|---|---|
| 14 | 0-BKD-31-2761<br><br>Backdraft Damper | Prevents backflow of cooling air through standby AHU D-B when AHU B-A is running. | Fails to backseat. | Mechanical failure. | See Remark #1. Local position indicators on the damper will indicate if damper is stuck open when the fan is idle. | A) Loss of cooling air to room served by the AHU.<br><br>B) Bypass flow through the standby unit can cause standby fan to rotate in reverse. Due to loss of cooling to room, Standby unit is required to start but may fail as a result of motor overload to overcome the reverse rotation.<br><br>C) This would result in the total loss of cooling air in the Shutdown Board Rooms. | None. (See Remarks) | 1. Indirect indication of functional failure of AHU; MCR indication of AHU B-A and A-A motors running; local indication on L-538 of high inlet temperature to AHU B-A.<br><br>2. Operability of the dampers is periodically verified.. |
| | | Provide flow path for air flow from AHU. | Fails to open (Stuck closed) when AHU D-B is running (Train B) | Mechanical failure | See Remark #2. | Loss of redundancy in cooling air flow from Shutdown board Room. | None.<br><br>Low flow from AHU will automatically initiate Train "A" Chiller and AHUs. | 1. Normally opens when AHU is running.<br><br>2. Indirect indication of functional failure of AHU; local indication on L-540 of inlet temp. to AHU D-B. |

**Table 9.4-9 Failure Modes and Effects Analysis Subsystem: Shutdown Board Room Air Conditioning and Ventilation (Sheet 13 of 26)**

| Item No. | Component | Function | Failure Mode | Potential Cause | Method of Detection | Effect on System | Effect on Plant | Remarks |
|---|---|---|---|---|---|---|---|---|
| 15 | 0-BKD-31-2705<br><br>Backdraft Damper | Prevents backflow of cooling air through standby AHU A-A when AHU C-B is running. | Fails to backseat. | Mechanical failure. | See Remark #1. Local position indicators on the damper will indicate if damper is stuck open. | A) Loss of cooling air to room served by the AHU.<br><br>B) Bypass flow through the standby unit can cause standby fan to rotate in reverse. Due to loss of cooling to room, Standby unit is required to start but may fail as a result of motor overload to overcome the reverse rotation.<br><br>C) This would result in the total loss of cooling air in the Shutdown Board Rooms. | None. (See Remarks) | 1. Indirect indication of functional failure of AHU; MCR indication of AHU C-B and D-B motors running; local indication on L-537 of inlet temperature to AHU C-B.<br><br>2. Operability of the dampers is periodically verified.. |
| | | Provide flow path for air flow from AHU. | Fails to open (Stuck closed) when AHU A-A is running. | Mechanical failure. | See Remark #2. | Loss of redundancy in cooling air flow from Shutdown Board Room. | None.<br><br>(Low flow from AHU will automatically initiate Train B Chiller and AHUs.) | 1. Normally opens when AHU is running.<br><br>2. Indirect indication of functional failure of AHU; local indication on L-551 of inlet temperature to AHU A-A. |

**Table 9.4-9 Failure Modes and Effects Analysis Subsystem: Shutdown Board Room Air Conditioning and Ventilation (Sheet 14 of 26)**

| Item No. | Component | Function | Failure Mode | Potential Cause | Method of Detection | Effect on System | Effect on Plant | Remarks |
|---|---|---|---|---|---|---|---|---|
| 16 | 0-BKD-31-2760<br><br>Backdraft Damper | Prevents backflow of cooling air through standby AHU B-A when AHU D-B is running. | Fails to backseat. | Mechanical failure. | See Remark #1. Local position indicators on the damper will indicate if damper is stuck open. | A) Loss of cooling air to room served by the AHU.<br><br>B) Bypass flow through the standby unit can cause standby fan to rotate in reverse. Due to loss of cooling to room, Standby unit is required to start but may fail as a result of motor overload to overcome the reverse rotation.<br><br>C) This would result in the total loss of cooling air in the Shutdown Board Rooms. | None. (See Remarks) | 1. Indirect indication of functional failure of AHU; MCR indication of AHU D-B and C-B motors running; local indication on L-540 of inlet temperature to AHU D-B.<br><br>2. Operability of the dampers is periodically verified.. |
| | | Provide flow path for air flow from AHU. | Fails to open (Stuck closed) when AHU B-A is running. | Mechanical failure. | See Remark #2. | Loss of redundancy in cooling air flow from Shutdown Board Room. | None.<br>(Low flow from AHU will automatically initiate Train "B" chiller and AHUs). | 1. Normally opens when AHU is running.<br><br>2. Indirect indication of functional failure of AHU; local indication on L-538 of inlet temperature to AHU B-A. |

**Table 9.4-9 Failure Modes and Effects Analysis Subsystem: Shutdown Board Room Air Conditioning and Ventilation (Sheet 15 of 26)**

| Item No. | Component | Function | Failure Mode | Potential Cause | Method of Detection | Effect on System | Effect on Plant | Remarks |
|---|---|---|---|---|---|---|---|---|
| 17 | 0-FAN-31-62-A<br><br>Pressurizing Air Supply Fan A-A | Provides pressur-ization to maintain 6.9kV Shutdown Board Room at slightly positive pressure with respect to atmosphere. | Fails to start, fails while running. | Mechanical failure; Train A power failure; Control signal failure. | Indicating lights in MCR (1-HS-31-64A) and CISP indicating lights in MCR (1-HS-31-64A). | Loss of redundancy in providing pressurization to 6.9 kV Shutdown Board Room.<br><br>See Remark #1. | None.<br><br>(After trip due to lo suction flow to Fan A-A, the redundant Train B Fan C-B will automatically start.) | 1.The pressurizing fans are not required to mitigate the effects of a DBE.<br><br>2.Fans can be restarted after reset after Phase A CIS from Unit 1. Review of the schematics establishes the separation and independence of the Train A and Train B fans. |
| | | | Fails to stop. | Mechanical failure; Hot short in control wiring; Control signal failure; CIS Phase A Control signal failure.<br><br>CRI Control Room Isolation signal - Train A fails. | Indicating lights in MCR and CISP indicating lights in MCR (1-HS-31-64A).<br><br>Alarm is MCR when ΔP between MCRHZ and ABSDBR is <1/8– inch w.g. | See Remark #2. | None<br>(See Remark #3). | 1.Fans can be stopped via HS-31-64 A or B.<br><br>2.Over pressurization of 6.9 kV Shutdown Board Room A with respect to MCR.<br><br>3.)Differential pressure switches will alarm if the ΔP is not adequate and start standby C-B emergency pressurizing fan during CRI mode to restore MCR ΔP with respect to Shutdown Bd. Rooms. |

**Table 9.4-9 Failure Modes and Effects Analysis Subsystem: Shutdown Board Room Air Conditioning and Ventilation (Sheet 16 of 26)**

| Item No. | Component | Function | Failure Mode | Potential Cause | Method of Detection | Effect on System | Effect on Plant | Remarks |
|---|---|---|---|---|---|---|---|---|
| 18 | 0-FAN-31-67-B<br><br>Pressurizing Air Supply Fan C-B | Provides pressuri-zation to maintain 6.9 kV Shutdown Board Room at slightly positive pressure with respect to atmosphere. | Fails to start, fails while running. | Mechanical failure; Train B power failure; Control signal failure. | Indicating lights in MCR (1-HS-31-64A) and CISP indicating lights in MCR (1-HS-31-64A). | Loss of redundancy in providing pressurization to 6.9 kV Shutdown Board Room.<br><br>See Remark #1. | None.<br><br>(After trip due to lo suction flow to Fan C-B, the redundant Train A Fan A-A will automatically start.) | 1. The pressurizing fans are not required to mitigate the effects of a DBE.<br><br>2. Fan can be restarted after reset after Phase A CIS from Unit 1. Review of the schematics establishes the separation and independence of the Train A and Train B fans. |
| | | | Fails to stop. | Mechanical failure; Hot short in control wiring; Control signal failure; CIS Phase A Control signal failure. | Indicating lights in MCR and CISP indicating lights in MCR (1-HS-31-64A). | See Remark #2. | None<br>(See Remark #3.) | 1. Fans can be stopped via HS-31-67 A or B.<br><br>2. Differential pressure switches will alarm if the ΔP is not adequate and start standby CB emergency pressurizing fan during CRI mode to restore MCR ΔP with respect to Shutdown Bd. Rooms. |
| | | | | CRI Control Room Isolation signal - Train A fails. | Alarm in MCR when ΔP between MCRHZ and ABSDBR is <1/8 inch w.g. | Over pressurization of 6.9 kV Shutdown Board Room A. | | |

**Table 9.4-9 Failure Modes and Effects Analysis Subsystem: Shutdown Board Room Air Conditioning and Ventilation (Sheet 17 of 26)**

| Item No. | Component | Function | Failure Mode | Potential Cause | Method of Detection | Effect on System | Effect on Plant | Remarks |
|---|---|---|---|---|---|---|---|---|
| 19 | 0-FAN-31-64-A<br><br>Pressurizing Air Supply Fan B-A | Provides pressuri-zation to maintain 6.9 kV Shutdown Board Room at slightly positive pressure with respect to atmosphere. | Fails to start, fails while running. | Mechanical failure; Train A power failure; Control signal failure. | Indicating lights in MCR and CISP indicating lights in MCR (1-HS-31-62A). | Loss of redundancy in providing pressurization to 6.9 kV Shutdown Board Room.<br><br>See Remark #1. | None.<br><br>(After trip due to lo suction flow to Fan B-A, the redundant Train B Fan D-B will automatically start.) | 1. The pressurizing fans are not required to mitigate the effects of a DBE.<br><br>2. Fan can be restarted after reset after Phase A CIS from Unit 1. Review of the schematics establishes the separation and independence of the Train A and Train B fans. |
| | | | Fails to stop. | Mechanical failure; Hot short in control wiring; Control signal failure; CIS Phase A Control signal failure. | Indicating lights in MCR and CISP indicating lights in MCR (1-HS-31-62A). | See Remark #2. | None<br>(See Remark #3.) | 1. Fans can be stopped via HS-31-62 A or B.<br><br>2. Differential pressure switches will alarm if the ΔP is not adequate and start standby C-B emergency pressurizing fan during CRI mode to restore MCR ΔP with respect to Shutdown Bd. rooms. |
| | | | | CRI Control Room Isolation signal - Train A fails. | Alarm in MCR when ΔP between MCRHZ and ABSDBR is <1/8 inch w.g. | Over pressurization of 6.9 kV Shutdown Board Room A. | | |

**Table 9.4-9 Failure Modes and Effects Analysis Subsystem: Shutdown Board Room Air Conditioning and Ventilation (Sheet 18 of 26)**

| Item No. | Component | Function | Failure Mode | Potential Cause | Method of Detection | Effect on System | Effect on Plant | Remarks |
|---|---|---|---|---|---|---|---|---|
| 20 | 0-FAN-31-68-B<br><br>Pressurizing Air Supply Fan D-B | Provides pressur-ization to maintain 6.9 kV Shutdown Board Room at slightly positive pressure with respect to atmosphere. | Fails to start, fails while running. | Mechanical failure; Train B power failure; Control signal failure. | Indicating lights in MCR and CISP indicating lights in MCR (1-HS-31-68A). | Loss of redundancy in providing pressurization to 6.9 kV Shutdown Board Room.<br><br>See Remark #1. | None.<br><br>(After trip due to lo suction flow to Fan D-B, the redundant Train A Fan B-A will automatically start.) | 1. The pressurizing fans are not required to mitigate the effects of a DBE.<br><br>2. Fan can be restarted after reset after Phase A CIS from Unit 1. Review of the schematics establishes the separation and independence of the Train A and Train B fans. |
| | | | Fails to stop. | Mechanical failure; Hot short in control wiring; Control signal failure; CIS Phase A Control signal failure. | Indicating lights in MCR and CISP indicating lights in MCR (1-HS-31-68A). | See Remark #2. | None<br>(See Remark #2.) | 1. Fans can be stopped via HS-31-68 A or B.<br><br>2. Differential pressure switches will alarm if the ΔP is not adequate and start standby C-B emergency pressurizing fan during CRI mode to restore MCR ΔP with respect to Shutdown Bd. rooms. |
| | | | | CRI Control Room Isolation signal - Train A fails. | Alarm in MCR when ΔP between MCRHZ and ABSDBR is <1/8 inch w.g. | Over pressurization of 6.9 kV Shutdown Board Room B. | | |

**Table 9.4-9 Failure Modes and Effects Analysis Subsystem: Shutdown Board Room Air Conditioning and Ventilation (Sheet 19 of 26)**

| Item No. | Component | Function | Failure Mode | Potential Cause | Method of Detection | Effect on System | Effect on Plant | Remarks |
|---|---|---|---|---|---|---|---|---|
| 21 | 0-BKD-31-2756 Backdraft Damper | Permits airflow to Pressurizing Fan C-B. | Fails to open (when Fan C-B is running). | Mechanical failure. | See Remark #1. Local position indicators on damper. | No air flow to fan C-B. Loss of redundancy in providing pressurizing air flow to Shutdown Board Rooms.<br><br>Lo flow at FS-31-66 will be detected and automatically start fan A-A.<br><br>See Remark #2. | None.<br><br>Train A Fan A-A will supply the pressurizing air. | 1. Indicating lights of Fan C-B powered and running (HS-31-67A) in MCR and CISP.<br><br>2. The functioning of the Pressurizing Fans is not required for mitigating the effects of a DBE. |
| | | Isolates idle Fan C-B from running Fan A-A. | Fails to backseat. | Mechanical failure. | See Remark #1. Local position indicators on damper. | Loss of pressurizing air to room served by the fan. | None.<br><br>See Remarks #2. | 1. MCR and CISP indication of Fan A-A powered and running (HS-31-64A).<br><br>2. The functioning of the Pressurizing Fans is not required for mitigating the effects of a DBE.<br><br>3. Operability of dampers is periodically verified. |

**Table 9.4-9 Failure Modes and Effects Analysis Subsystem: Shutdown Board Room Air Conditioning and Ventilation (Sheet 20 of 26)**

| Item No. | Component | Function | Failure Mode | Potential Cause | Method of Detection | Effect on System | Effect on Plant | Remarks |
|---|---|---|---|---|---|---|---|---|
| 22 | 0-BKD-31-2755<br><br>Backdraft Damper | Permits airflow to Pressurizing Fan A-A. | Fails to open (When Fan A-A is running). | Mechanical failure. | See Remark #1. Local position indicators on damper. | No air flow to fan A-A. Loss of redundancy in providing pressurizing air flow to Shutdown Board Rooms. Lo flow at FS-31-65 will be detected and automatically start fan C-B.<br><br>See Remark #2. | None.<br><br>(Train B Fan C-B will supply the pressurizing air.) | 1. Indicating lights of Fan A-A powered and running (HS-31-64A) in MCR and CISP.<br><br>2. The functioning of the Pressurizing Fans is not required for mitigating the effects of a DBE. |
| | | Isolates idle Fan A-A from running Fan C-B. | Fails to backseat. | Mechanical failure. | See Remark #1. Local position indicators on damper. | Loss of pressurizing air to room served by the fan. | None.<br><br>(See Remark #2.) | 1. MCR and CISP indication of Fan C-B powered and running (HS-31-67A).<br><br>2. The functioning of the Pressurizing Fans is not required for mitigating the effects of a DBE. |

**Table 9.4-9 Failure Modes and Effects Analysis Subsystem: Shutdown Board Room Air Conditioning and Ventilation (Sheet 21 of 26)**

| Item No. | Component | Function | Failure Mode | Potential Cause | Method of Detection | Effect on System | Effect on Plant | Remarks |
|---|---|---|---|---|---|---|---|---|
| 23 | 0-BKD-31-2812<br><br>Backdraft Damper | Permits airflow to Pressurizing Fan B-A. | Fails to open (When Fan B-A is running). | Mechanical failure. | See Remark #1. (Local position indicators on damper.) | No air flow to fan B-A. Loss of redundancy in providing pressurizing air flow to Shutdown Board Rooms. Lo flow on FS-31-63 will be detected and automatically start Fan D-B.<br><br>(See Remark #2.) | None.<br><br>(See Remark #2.) | 1. Indicating lights of Fan B-A powered and running (HS-31-62A) in MCR and CISP.<br><br>2. The functioning of the Pressurizing Fans is not required for mitigating the effects of a DBE. |
| | | Isolates idle Fan B-A from running Fan D-B. | Fails to backseat. | Mechanical failure. | See Remark #1. Local position indicators on damper. | Loss of pressurizing air to room served by the Fan. | None.<br><br>(See Remark #2.) | 1. MCR and CISP indication of Fan C-B powered and running (HS-31-67A).<br><br>2. The functioning of the Pressurizing Fans is not required for mitigating the effects of a DBE. |

**Table 9.4-9 Failure Modes and Effects Analysis Subsystem: Shutdown Board Room Air Conditioning and Ventilation (Sheet 22 of 26)**

| Item No. | Component | Function | Failure Mode | Potential Cause | Method of Detection | Effect on System | Effect on Plant | Remarks |
|---|---|---|---|---|---|---|---|---|
| 24 | 0-BKD-31-2811<br><br>Backdraft Damper | Permits airflow to Pressurizing Fan D-B. | Fails to open (when Fan D-B is running). | Mechanical failure. | See Remark #1. (Local position indicators on damper.) | No air flow to fan D-B. Loss of redundancy in providing pressurizing air flow to Shutdown Board Room. Lo flow at FS-31-69 will be detected and automatically start fan B-A.<br><br>See Remark #2. | None.<br><br>(Train A Fan B-A will supply the pressurizing air.) | 1. Indicating lights of Fan D-B powered and running (HS-31-68A) in MCR and CISP.<br><br>2. The functioning of the Pressurizing Fans is not required for mitigating the effects of a DBE. |
| | | Isolates idle Fan D-B from running Fan B-A. | Fails to backseat. | Mechanical failure. | See Remark #1. (Local position indicators on damper.) | Loss of pressurizing air to room served by the Fan. | None.<br><br>(See Remark #2.) | 1. MCR and CISP indication of Fan B-A powered and running (HS-31-62A).<br><br>2. The functioning of the Pressurizing Fans is not required for mitigating the effects of DBE. |

**Table 9.4-9 Failure Modes and Effects Analysis Subsystem: Shutdown Board Room Air Conditioning and Ventilation (Sheet 23 of 26)**

| Item No. | Component | Function | Failure Mode | Potential Cause | Method of Detection | Effect on System | Effect on Plant | Remarks |
|---|---|---|---|---|---|---|---|---|
| 25 | 0-FCO-31-276-A<br><br>Tornado Damper Train A | Provides suction flow path for the 6.9kV/480V shutdown board room pressurizing Fans A-A and C-B. | Spuriously Closes (no tornado)<br><br>Fails to close when required for Tornado protection. | Mechanical failure; Hot short in electrical supply.<br><br>Mechanical failure, electrical failure,Operator error (hand switch placed in wrong position). | Indicating light in MCR (0-HS-31-34-A). Mechanical Equipment Room indication. Locally, 0-ZS-31-276A-A status indication.<br><br>Indicating lights in MCR (0-HS-31-34). Mechanical equipment room indication. Locally, 0-ZS-31-276A-A status indication. | Loss of suction to Shutdown Board Room Press. fans on Unit 1 side. Loss of pressurization function to 6.9 kV Shutdown Board Room A.<br><br>Loss of tornado isolation redundancy. | None.<br><br>(See Remark #2.)<br><br>There is no effect on the plant with the failure of the damper to close. Redundant isoloation components are installed which prevent the pressure differential from affecting the components downstream of this device. | 1. Fails as is. Normally open.<br><br>2. Pressurizing fans are not required to mitigate the effects of a DBE.<br><br>Pressurizing fans are not required during a tornado event. |

**Table 9.4-9 Failure Modes and Effects Analysis Subsystem: Shutdown Board Room Air Conditioning and Ventilation (Sheet 24 of 26)**

| Item No. | Component | Function | Failure Mode | Potential Cause | Method of Detection | Effect on System | Effect on Plant | Remarks |
|---|---|---|---|---|---|---|---|---|
| 26 | 0-FCO-31-275-B<br><br>Tornado Damper Train B | Provides suction flow path for the 6.9kV/480V Shutdown Board Rooms Pressurizing Fans A-A and C-B. | Spuriously Closes (no tornado). | Mechanical failure; Hot short in electrical supply. | Indicating lights in MCR (0-HS-31-35-B). Mechanical Equipment Room indication. Locally, 0-ZS-31-275 status indication. | Loss of suction due to Shutdown Board Room Press. fans on Unit 1 side. Loss of pressurization function to 6.9 kV Shutdown Board Room A. | None.<br><br>(See Remark #2.) | 1. Fails as is. Normally open. Motor operated valve.<br><br>2. Pressurizing fans are not required to mitigate the effects of a DBE. |
| | | | Fails to close when required for Tornado protection. | Mechanical failure, electrical failure, Operator error (hand switch placed in wrong position). | Indicating lights in MCR (0-HS-31-35). Mechanical Equipment Room indication. Locally, 0-ZS-31-275A-B status indication. | Loss of tornado isolation redundancy. | There is no effect on the plant with the failure of the damper to close. Redundant isolation components are installed which would prevent the pressure differential from affecting the components downstream of this. | Pressurizing fans are not required during a tornado event. |

**Table 9.4-9 Failure Modes and Effects Analysis Subsystem: Shutdown Board Room Air Conditioning and Ventilation (Sheet 25 of 26)**

| Item No. | Component | Function | Failure Mode | Potential Cause | Method of Detection | Effect on System | Effect on Plant | Remarks |
|---|---|---|---|---|---|---|---|---|
| 27 | 0-FCO-31-278-A<br><br>Tornado Damper Train A | Provides suction flow path for the 6.9kV/480V Shutdown Board Rooms Pressurizing Fans B-A and D-B (Unit 2). | Spuriously Closes (no tornado) | Mechanical failure; Hot short in electrical supply. | Indicating lights in MCR 0-(HS-31-32-A). Mechanical Equipment Room indication. Locally, 0-ZS-31-278 status indication. | Loss of suction due to Shutdown Board Room Press. fans on Unit 2 side. Loss of pressurization function 60 6.9 kV Shutdown Board Room B. | None.<br><br>(See Remark #2.) | 1. Fails as is. Normally open.<br><br>2. Pressurizing fans are not required to mitigate the effects of a DBE. |
| | | | Fails to close when required for Tornado protection. | Mechanical failure, electrical failure, Operator error (hand switch placed in wrong position). | Indicating lights in MCR (0-HS-31-32). Mechanical Equipment Room indication. Locally, 0-ZS-31-275A-A status indication | Loss of tornado isolation redundancy. | There is no effect on the plant with the failure of the damper to close. Redundant isolation components are installed which would prevent the pressure differential from affecting the components downstream of this. | Pressurizing fans are not required during a tornado event. |

**Table 9.4-9 Failure Modes and Effects Analysis Subsystem: Shutdown Board Room Air Conditioning and Ventilation (Sheet 26 of 26)**

| Item No. | Component | Function | Failure Mode | Potential Cause | Method of Detection | Effect on System | Effect on Plant | Remarks |
|---|---|---|---|---|---|---|---|---|
| 28 | 0-FCO-31-277-B<br><br>Tornado Damper Train B | Provides suction flow path for the 6.9kV/480V Shutdown Board Rooms Pressurizing Fans B-A and D-B (Unit 2). | Spuriously Closes (no tornado) | Mechanical failure; Hot short in electrical supply. | Indicating lights in MCR (0-HS-31-33-B). Mechanical Equipment Room indication. Locally, 0-ZS-31-277 status indication. | Loss of suction due to Shutdown Board Room Pressurization fans on Unit 2 side. Loss of pressurization function to 6.9 kV Shutdown Board Room B. | None.<br><br>(See Remark #2.) | 1. Fails as is. Normally open.<br><br>2. Pressurizing fans are not required to mitigate the effects of a DBE. |
| | | | Fails to close when required for Tornado protection. | Mechanical failure, electrical failure, Operator error (hand switch placed in wrong position). | Indicating lights in MCR (0-HS-31-33). Mechanical Equipment Room indication. Locally, 0-ZS-31-277A-B status indication | Loss of tornado isolation redundancy. | There is no effect on the plant with the failure of the damper to close. Redundant isolation components are installed which would prevent the pressure differential from affecting the components downstream of this. | Pressurizing fans are not required during a tornado event. |

**Table 9.4-10 Failure Modes and Effects Analysis for Active Failures Subsystem: Main Steam Valve Vault Ventilation System (Sheet 1 of 1)**

| Item No. | Component | Function | Failure Mode | Potential Cause | Method of Detection | Effect on System | Effect on Plant | Remarks |
|---|---|---|---|---|---|---|---|---|
| 1 | 1-FAN-30-26 and 1-FAN-30-302 | Provides outside air for cooling of the South Steam Valve Vault. | Continues to run after shutdown command is given or spuriously starts after shutdown. This failure is of concern during periods when the ambient temperature is at the design minimum. | Electrical control failure, operator error (switch left in incorrect position). | No direct detection method for the fan; the indicating lights and hand switch are local devices. | None, (See Remarks) | None, (See Remarks) | System Description and Freeze protection procedure require that door and ventilation covers be installed on both the north and south main steam valve vaults should the outside temperature drop below 35°F. With the covers installed there would be little if any air flow produced as a result of the fans continuing to run. Therefore this failure would have no adverse impact on the plant. |
| 2 | 1-FAN-30-25 and 301 | Provides outside air for cooling of the North Steam Valve Vault. | Continues to run after shutdown command is given or spuriously starts after shutdown. This failure is of concern during periods when the ambient temperature is at the design minimum. | Electrical control failure, operator error (switch left in incorrect position). | No direct detection method for the fan; the indicating lights and hand switch are local devices. | None, (See Remarks) | None, (See Remarks) | System Description and Freeze protection procedure require that door and ventilation covers be installed on both the north and south main steam valve vaults should the outside temperature drop below 35°F. With the covers installed there would be little if any air flow produced as a result of the fans continuing to run. Therefore this failure would have no adverse impact on the plant. |

**Table 9.4-10A Failure Modes and Effects Analysis for Active Failures Subsystem: Post Accident Sampling System (Sheet 1 of 1)**

| Item No. | Component | Function | Failure Mode | Potential Cause | Method of Detection | Effect on System | Effect on Plant | Remarks |
|---|---|---|---|---|---|---|---|---|
| 1 | 1-FAN-31-18A1 | Provides heated (if required) outside air to the post accident sampling facility during periods of times that a post accident sample is required. | Continues to run after shutdown command is given or spuriously starts after shutdown. One of the redundant isolation dampers fails open (1-FCO-31-350 or 365). Heater (1-HTR-31-479) fails off. Outside temperature at minimum design value. | Electrical control failure, operator error (switch left in incorrect position). | No direct detection method for the fan; the indicating lights and hand switch are local devices. | None, (See Remarks) | None, (See Remarks) | 1. An anaylsis was performed to show that the space temperatures would remain within allowable limits.<br><br>2. Post accident, this system is manually energized. Post accident sampling ventilation is controlled by procedures. These procedures control operation of this system and require the ventilation system be shut down after sampling is complete. |

**Table 9.4-11 Deleted by Amendment 56**

THIS PAGE INTENTIONALLY LEFT BLANK

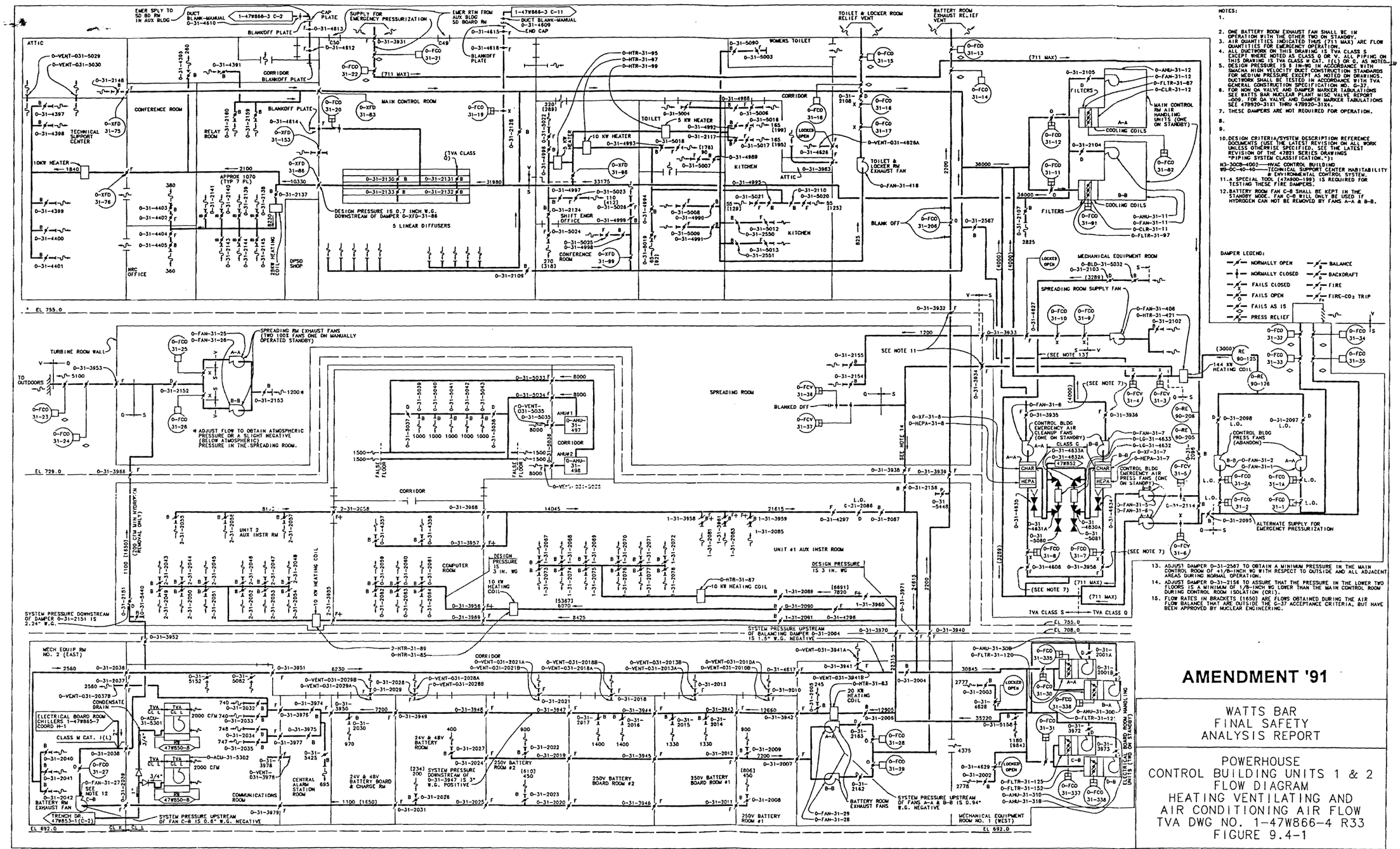


Figure 9.4-1 Powerhouse, Control Building Units 1 & 2 Flow Diagram for Heating, Ventilating, and Air Conditioning Air Flow

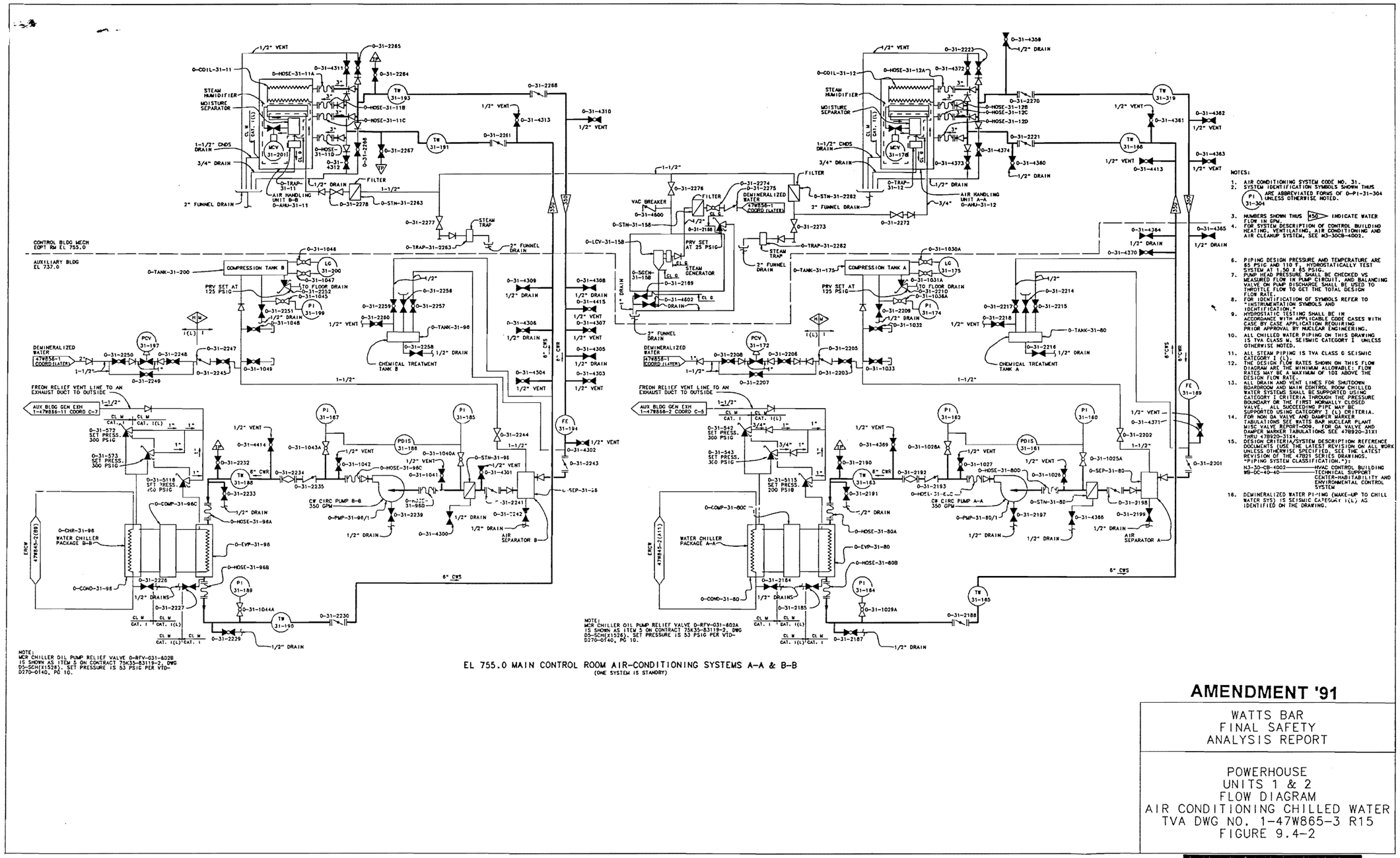


Figure 9.4-2 Powerhouse Units 1 & 2 Flow Diagram for Air Conditioning Chilled Water

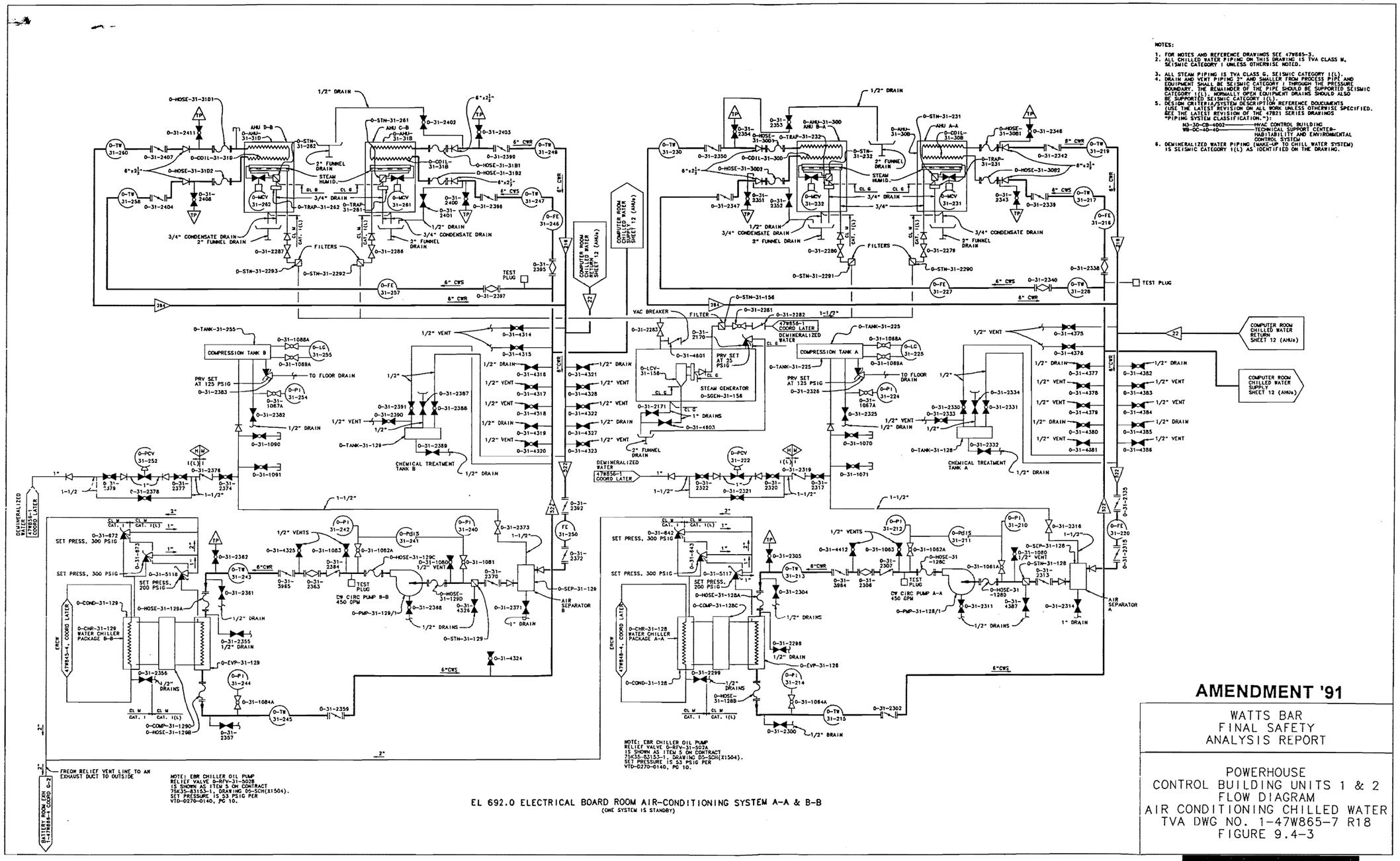


**Figure 9.4-3 Powerhouse, Control Building Units 1 & 2 Flow Diagram for Air Conditioning Chilled Water**

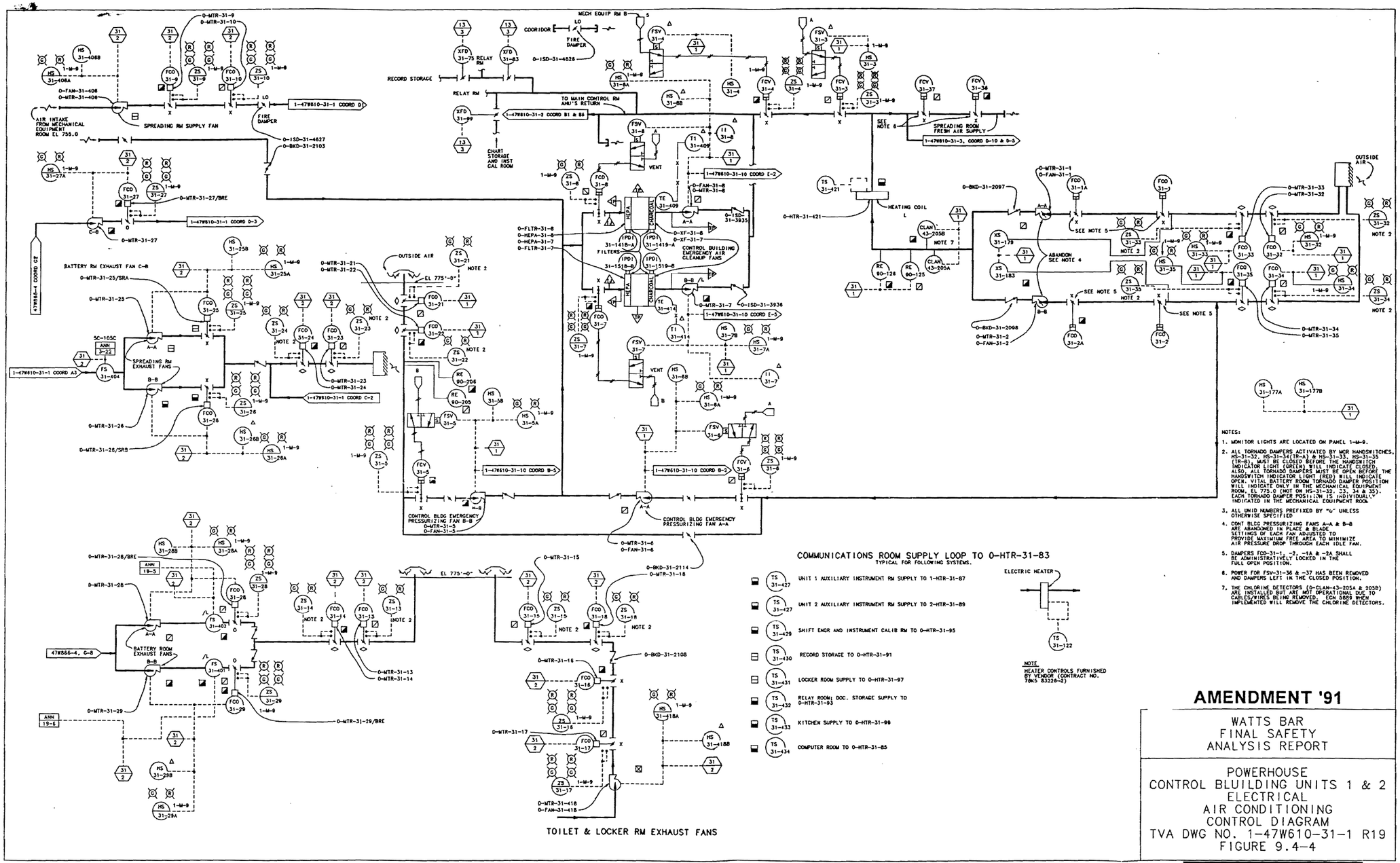


**Figure 9.4-4 Powerhouse, Control Building Units 1 & 2 Electrical Control Diagram Air Conditioning**

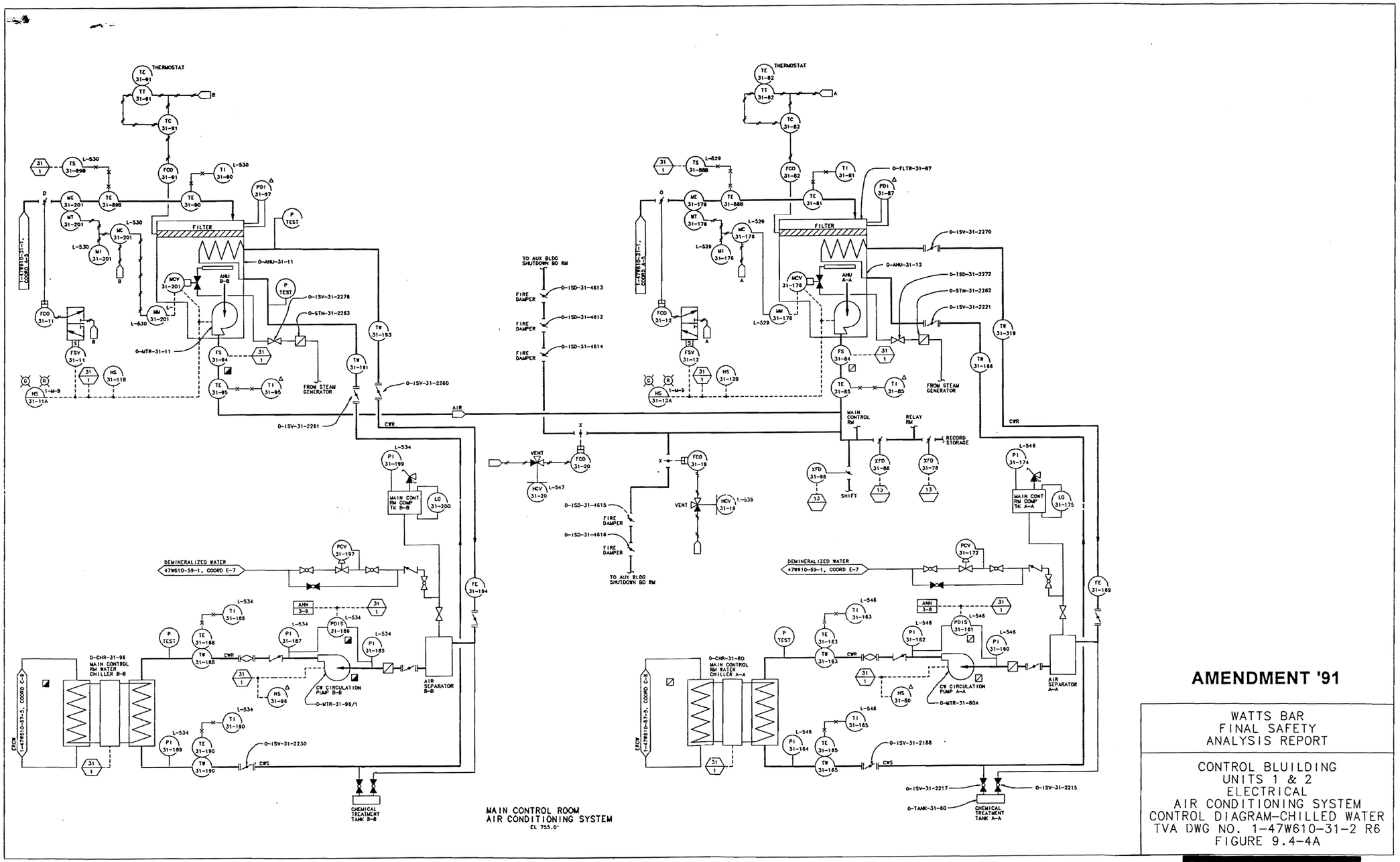


**Figure 9.4-4a Control Building Units 1 & 2 Electrical Air Conditioning Control Diagram - Chilled Water**

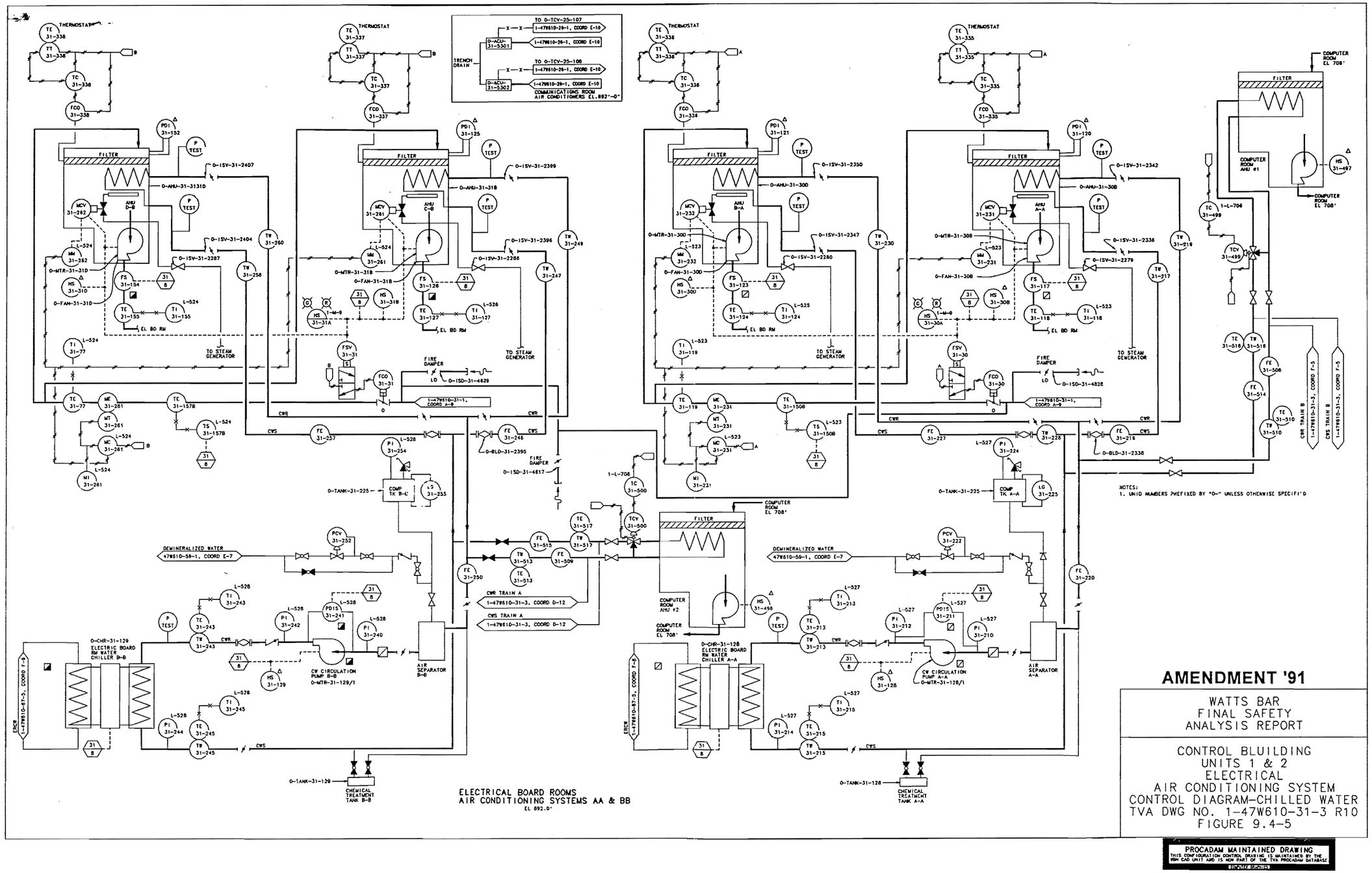


**Figure 9.4-5 Control Building units 1 & 2 Electrical Air Conditioning Control Diagram - Chilled Water**

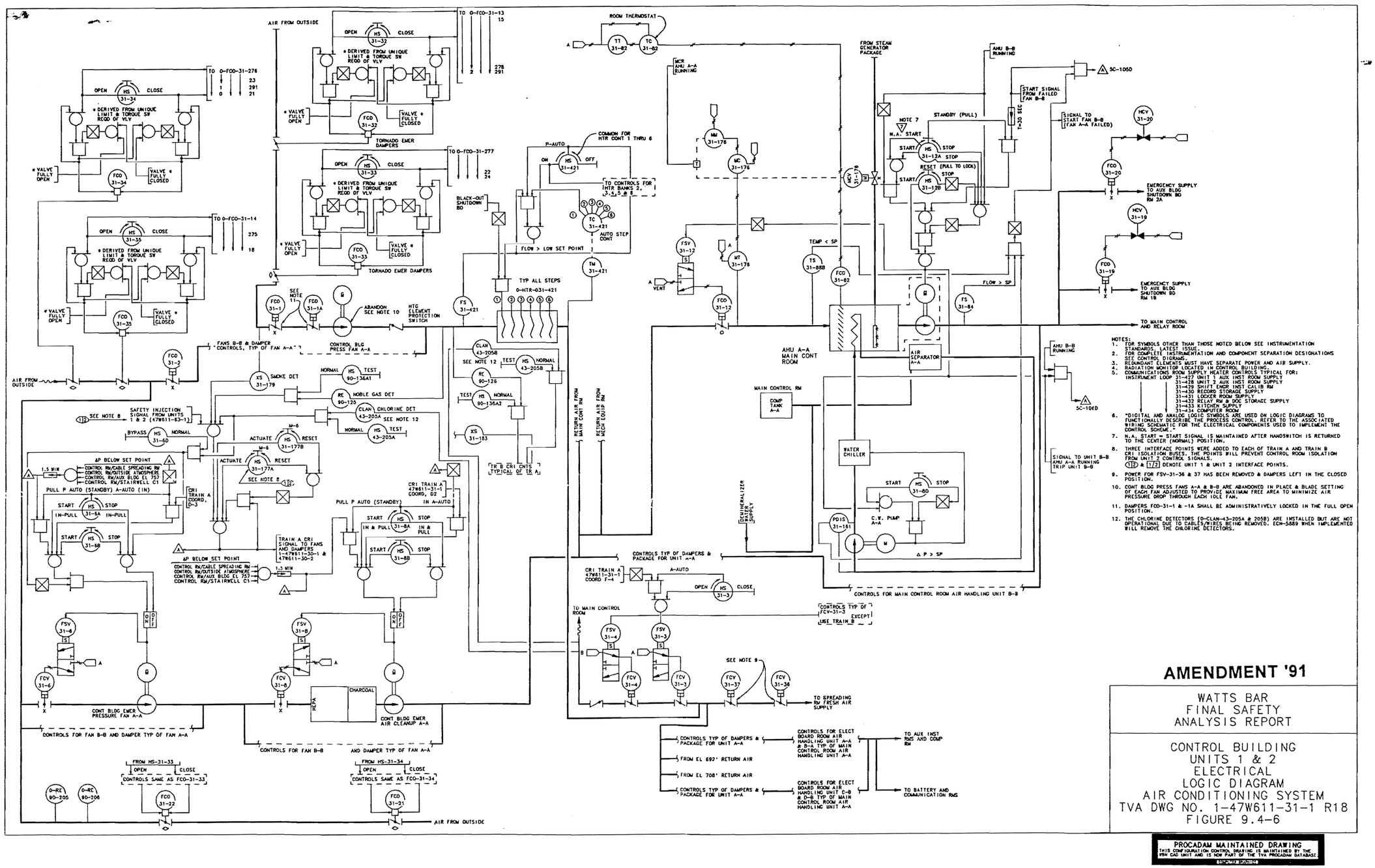


Figure 9.4-6 Control Building Units 1 & 2 Electrical Logic Diagram Air Conditioning System

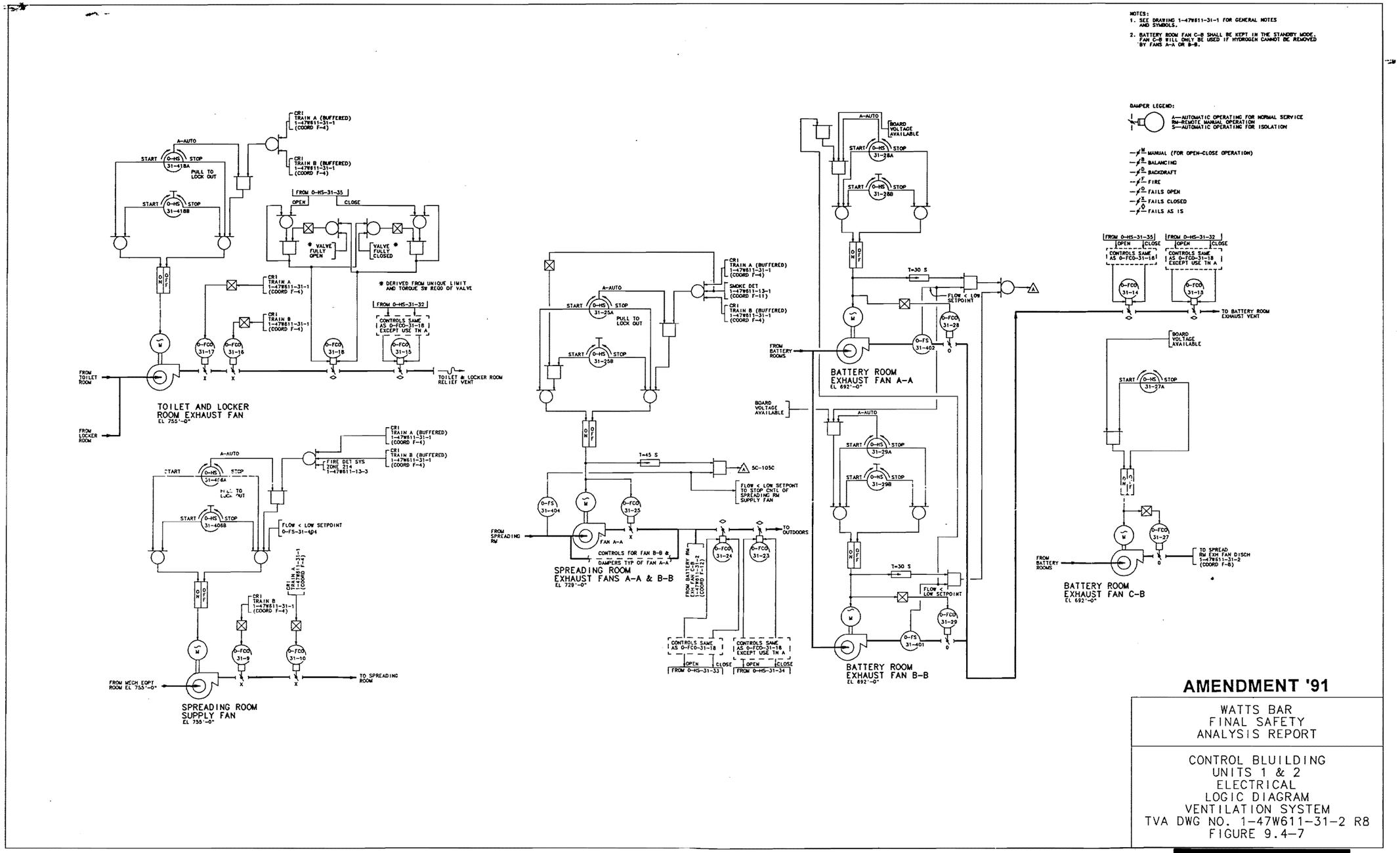


**Figure 9.4-7 Control Building Units 1 & 2 Electrical Logic Diagram Ventilation System**

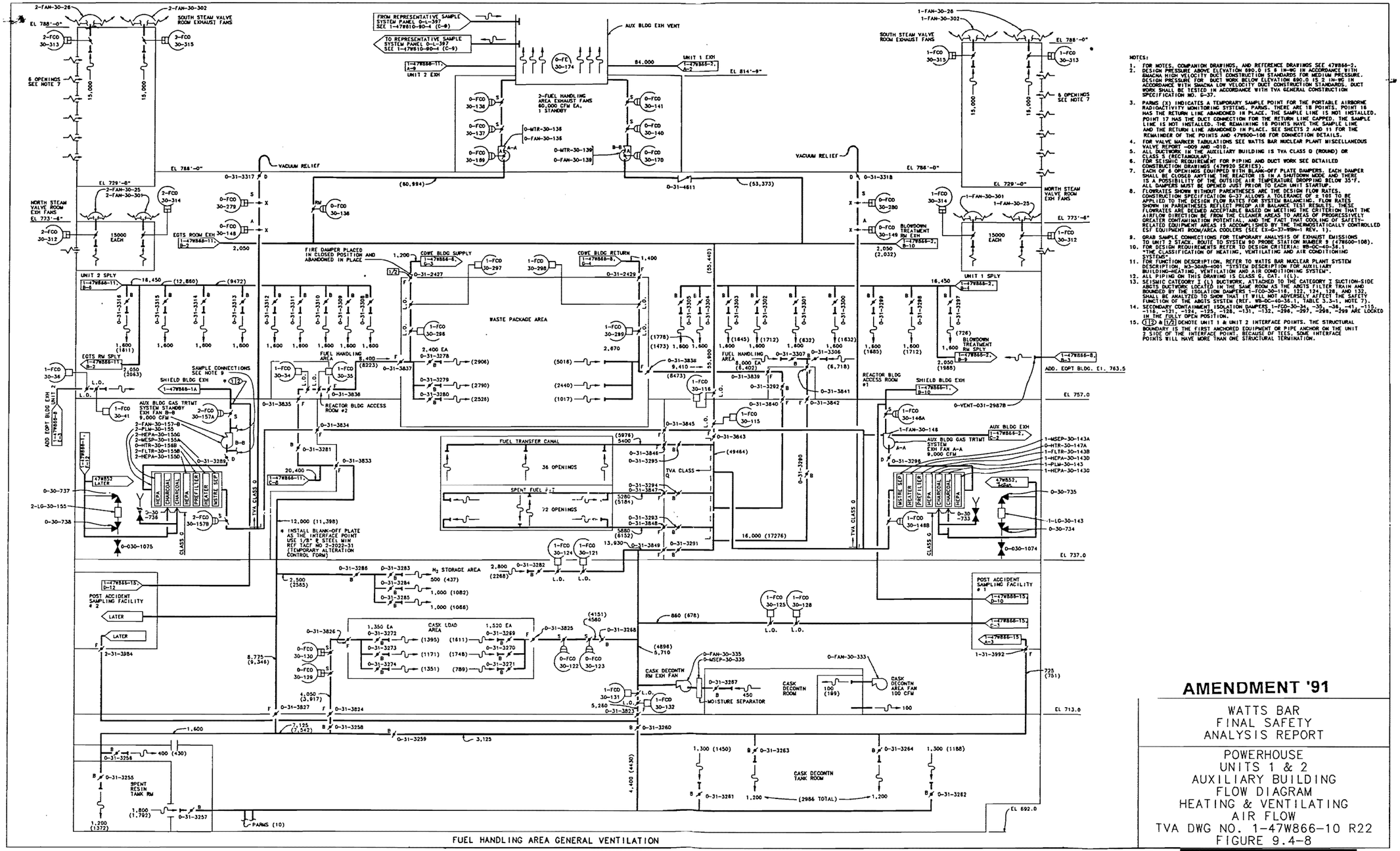


**Figure 9.4-8 Powerhouse Units 1 & 2 Auxiliary Building Flow Diagram, Heating, and Ventilating Air Flow**

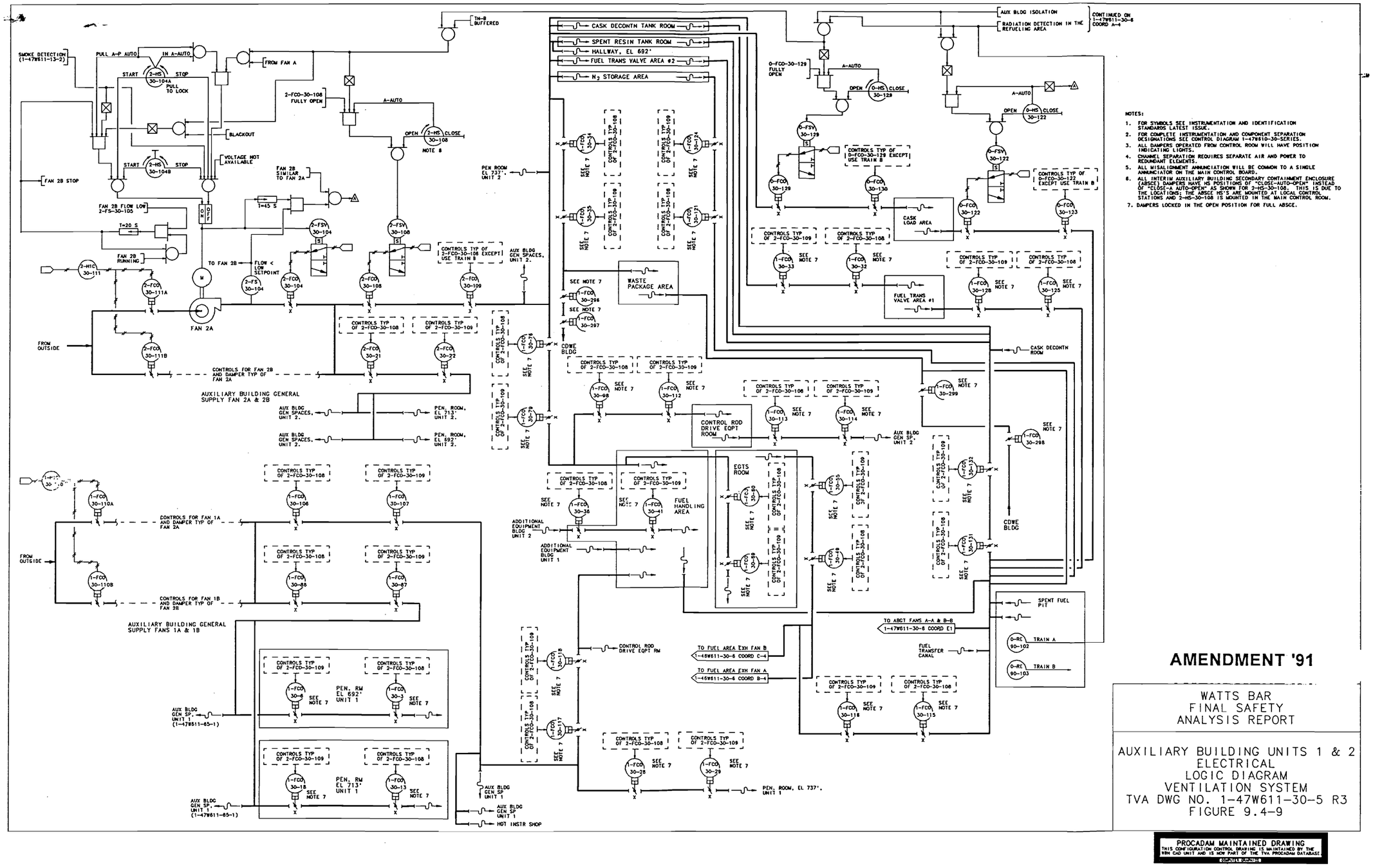


Figure 9.4-9 Auxiliary Building Units 1 & 2 Electrical Logic Diagram for Ventilation System

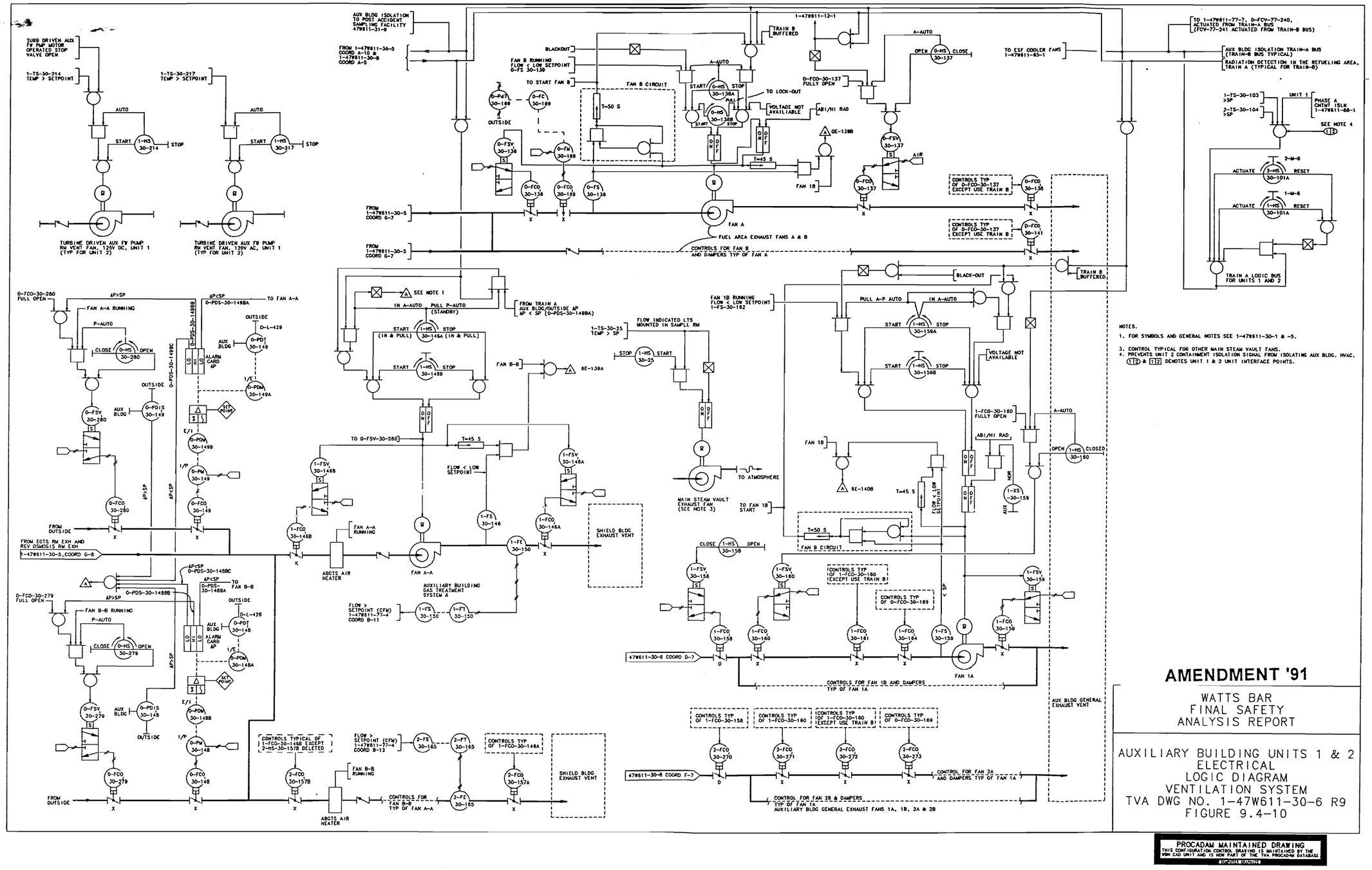


Figure 9.4-10 Auxiliary Building Units 1 & 2 Electrical Logic Diagram for Ventilation System

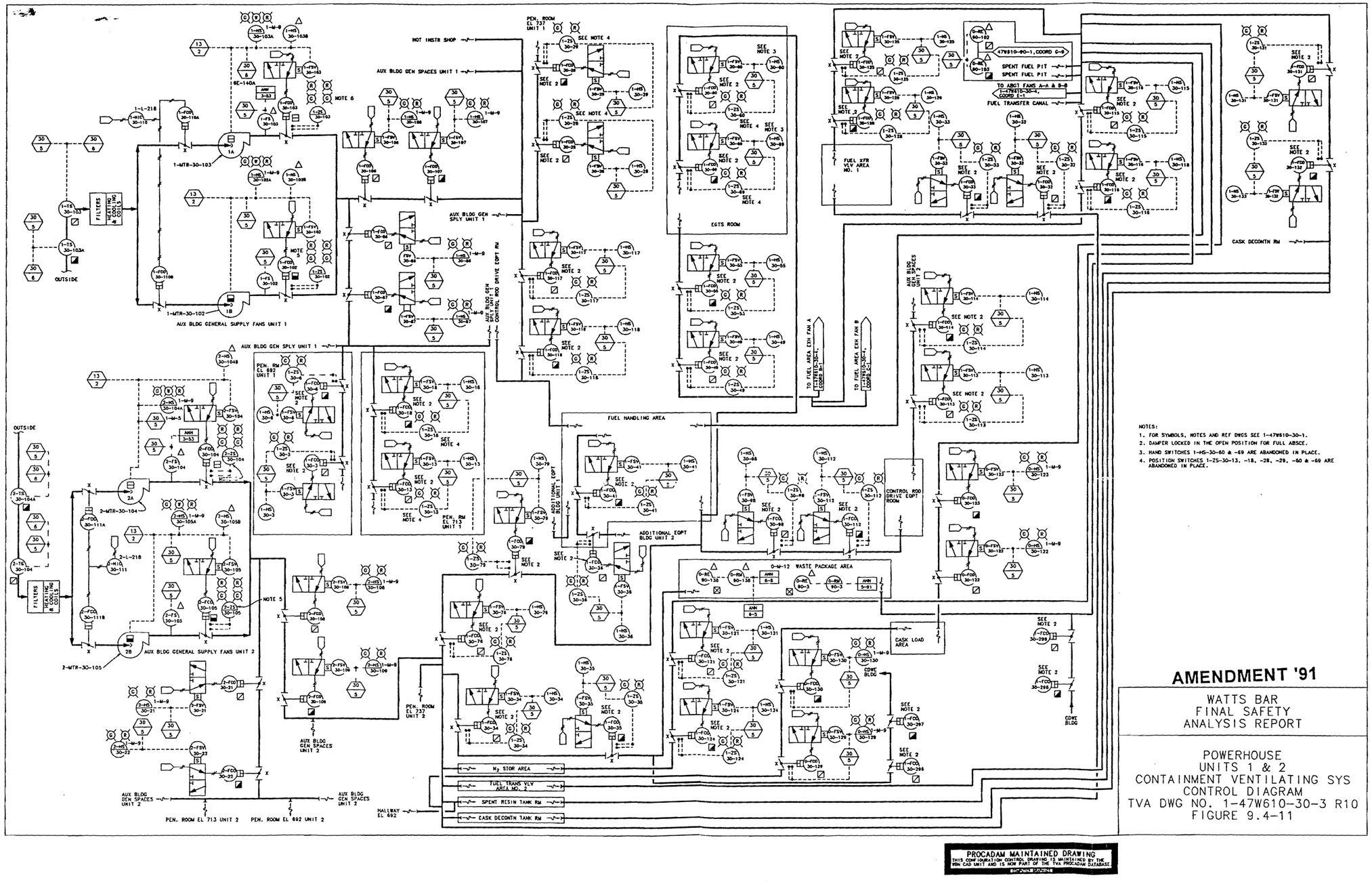


**Figure 9.4-11 Powerhouse Units 1 & 2 for Containment Ventilation Sytem Control Diagram**

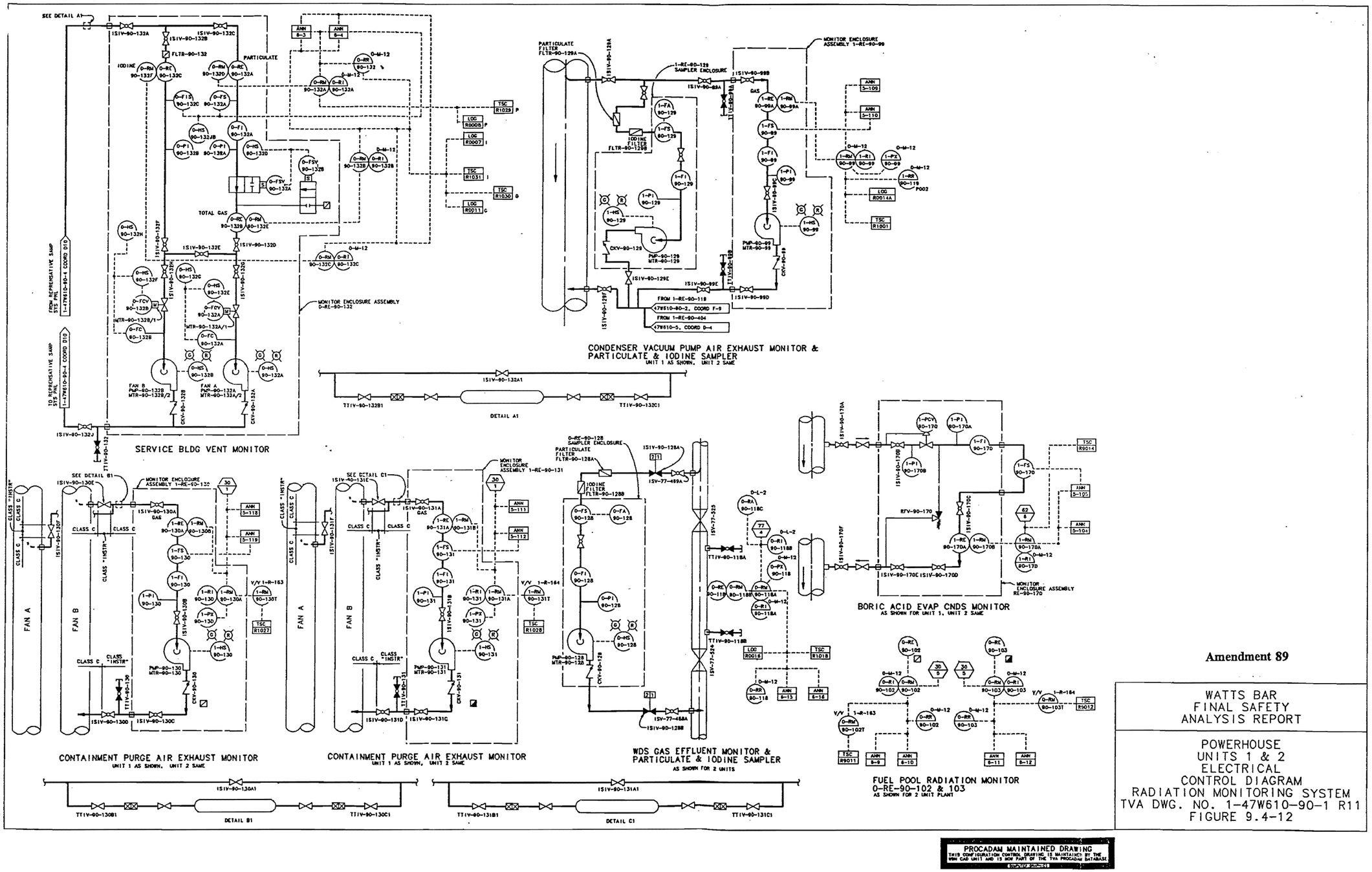


Figure 9.4-12 Powerhouse Units 1 & 2 Electrical Control Diagram for Radiation Monitoring System

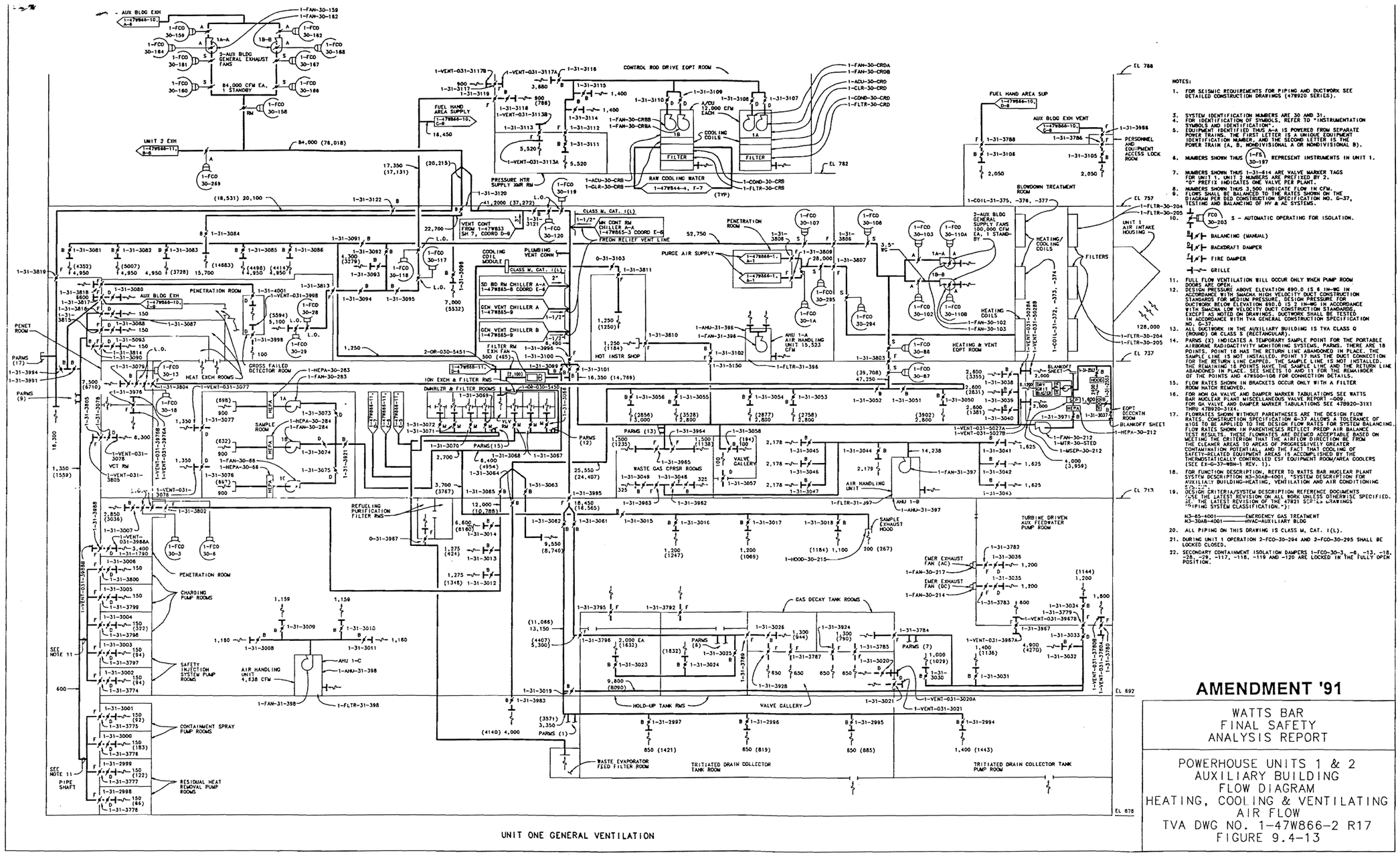


**Figure 9.4-13 Powerhouse Units 1 & 2 Auxiliary Building Flow Diagram for Heating, Cooling, and Ventilating Air Flow**

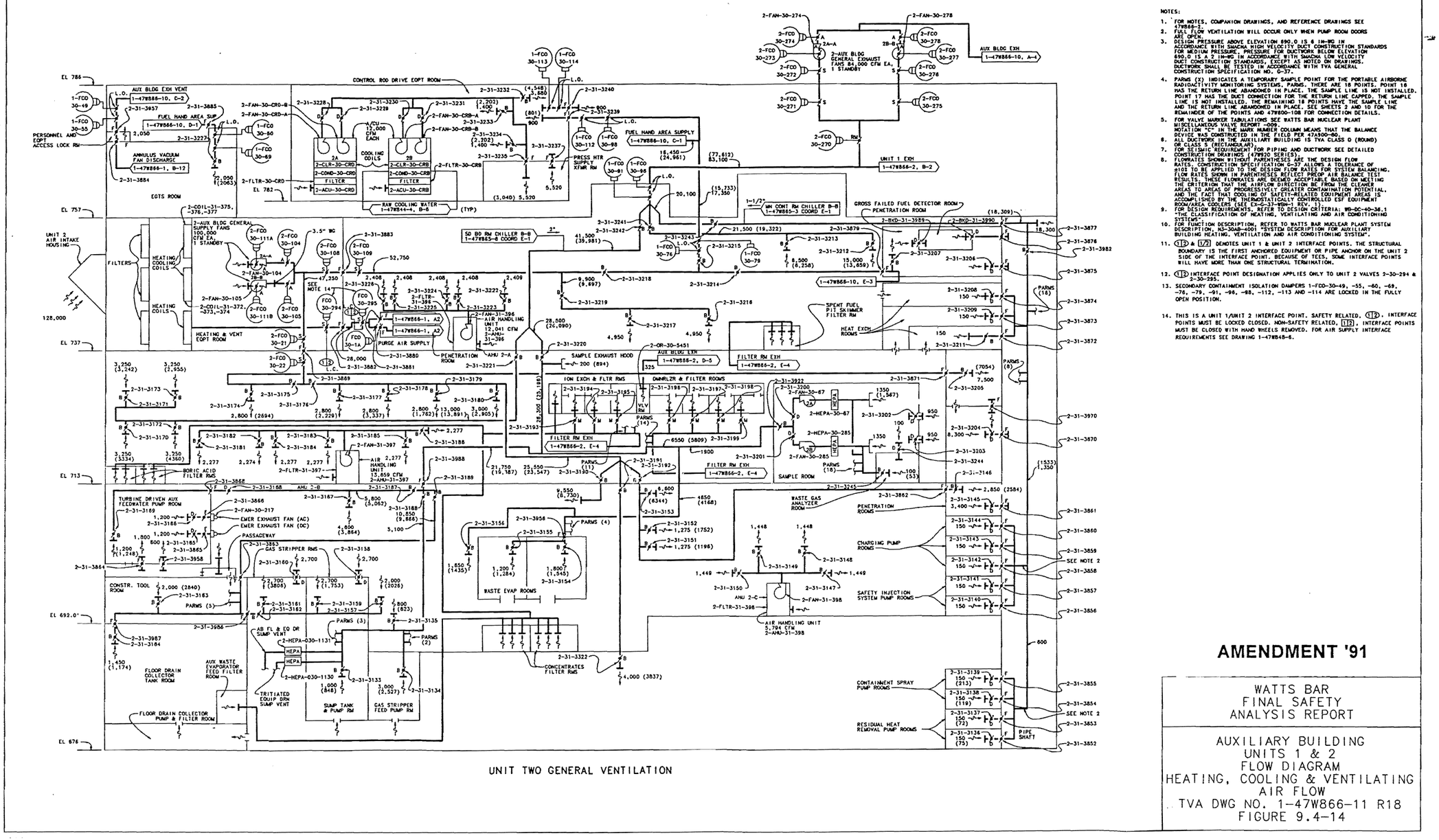


NOTES:

1. FOR NOTES, COMPANION DRAWINGS, AND REFERENCE DRAWINGS SEE 47W866-3.
2. FUEL FLOW VENTILATION WILL OCCUR ONLY WHEN PUMP ROOM DOORS ARE OPEN.
3. DESIGN PRESSURE ABOVE ELEVATION 690.0 IS 6 IN-WG IN ACCORDANCE WITH SMACNA HIGH VELOCITY DUCT CONSTRUCTION STANDARDS FOR MEDIUM PRESSURE. PRESSURE FOR DUCTWORK BELOW ELEVATION 690.0 IS A 2 IN-WG IN ACCORDANCE WITH SMACNA LOW VELOCITY DUCT CONSTRUCTION STANDARDS, EXCEPT AS NOTED ON DRAWINGS. DUCTWORK SHALL BE TESTED IN ACCORDANCE WITH TVA GENERAL CONSTRUCTION SPECIFICATION NO. G-37.
4. PARMS (X) INDICATES A TEMPORARY SAMPLE POINT FOR THE PORTABLE AIRBORNE RADIOACTIVITY MONITORING SYSTEMS. PARMS. THERE ARE 18 POINTS. POINT 18 HAS THE RETURN LINE ABANDONED IN PLACE. THE SAMPLE LINE IS NOT INSTALLED. POINT 17 HAS THE DUCT CONNECTION FOR THE RETURN LINE CAPPED. THE SAMPLE LINE IS NOT INSTALLED. THE REMAINING 16 POINTS HAVE THE SAMPLE LINE AND THE RETURN LINE ABANDONED IN PLACE. SEE SHEETS 2 AND 10 FOR THE REMAINDER OF THE POINTS AND 47W800-108 FOR CONNECTION DETAILS.
5. FOR VALVE MARKER TABULATIONS SEE WATTS BAR NUCLEAR PLANT MISCELLANEOUS VALVE REPORT -009.
   NOTATION "C" IN THE MARK NUMBER COLUMN MEANS THAT THE BALANCE DEVICE WAS CONSTRUCTED IN THE FIELD PER 47A900-80.
6. ALL DUCTWORK IN THE AUXILIARY BUILDING IS TVA CLASS D (ROUND) OR CLASS S (RECTANGULAR).
7. FOR SEISMIC REQUIREMENT FOR PIPING AND DUCTWORK SEE DETAILED CONSTRUCTION DRAWINGS (47W820 SERIES).
8. FLOWRATES SHOWN WITHOUT PARENTHESES ARE THE DESIGN FLOW RATES. CONSTRUCTION SPECIFICATION G-37 ALLOWS A TOLERANCE OF ±10% TO BE APPLIED TO THE DESIGN FLOW RATES FOR SYSTEM BALANCING. FLOW RATES SHOWN IN PARENTHESES REFLECT PREOP AIR BALANCE TEST RESULTS. THESE FLOWRATES ARE DEEMED ACCEPTABLE BASED ON MEETING THE CRITERION THAT THE AIRFLOW DIRECTION BE FROM THE CLEANER AREAS TO AREAS OF PROGRESSIVELY GREATER CONTAMINATION POTENTIAL, AND THE FACT THAT COOLING OF SAFETY-RELATED EQUIPMENT AREAS IS ACCOMPLISHED BY THE THERMOSTATICALLY CONTROLLED ESF EQUIPMENT ROOM/AREA COOLERS (SEE EX-EG-37-WBN-1 REV. 1).
9. FOR DESIGN REQUIREMENTS, REFER TO DESIGN CRITERIA: WB-DC-40-34.1 "THE CLASSIFICATION OF HEATING, VENTILATING AND AIR CONDITIONING SYSTEMS".
10. FOR FUNCTION DESCRIPTION, REFER TO WATTS BAR NUCLEAR PLANT SYSTEM DESCRIPTION, N3-30AB-4001 "SYSTEM DESCRIPTION FOR AUXILIARY BUILDING HEATING, VENTILATION AND AIR CONDITIONING SYSTEM".
11. (1/2) & (1/2) DENOTES UNIT 1 & UNIT 2 INTERFACE POINTS. THE STRUCTURAL BOUNDARY IS THE FIRST ANCHORED EQUIPMENT OR PIPE ANCHOR ON THE UNIT 2 SIDE OF THE INTERFACE POINT. BECAUSE OF TEES, SOME INTERFACE POINTS WILL HAVE MORE THAN ONE STRUCTURAL TERMINATION.
12. (1/2) INTERFACE POINT DESIGNATION APPLIES ONLY TO UNIT 2 VALVES 2-30-294 & 2-30-295.
13. SECONDARY CONTAINMENT ISOLATION DAMPERS 1-FCO-30-49, -55, -60, -69, -76, -79, -91, -98, -88, -112, -113 AND -114 ARE LOCKED IN THE FULLY OPEN POSITION.
14. THIS IS A UNIT 1/UNIT 2 INTERFACE POINT. SAFETY RELATED. (1/2). INTERFACE POINTS MUST BE LOCKED CLOSED. NON-SAFETY RELATED. (1/2). INTERFACE POINTS MUST BE CLOSED WITH HAND WHEELS REMOVED. FOR AIR SUPPLY INTERFACE REQUIREMENTS SEE DRAWING 1-47W848-6.

**Figure 9.4-14 Auxiliary Building Units 1 & 2 Flow Diagram for Heating, Cooling, and Ventilating Air Flow**

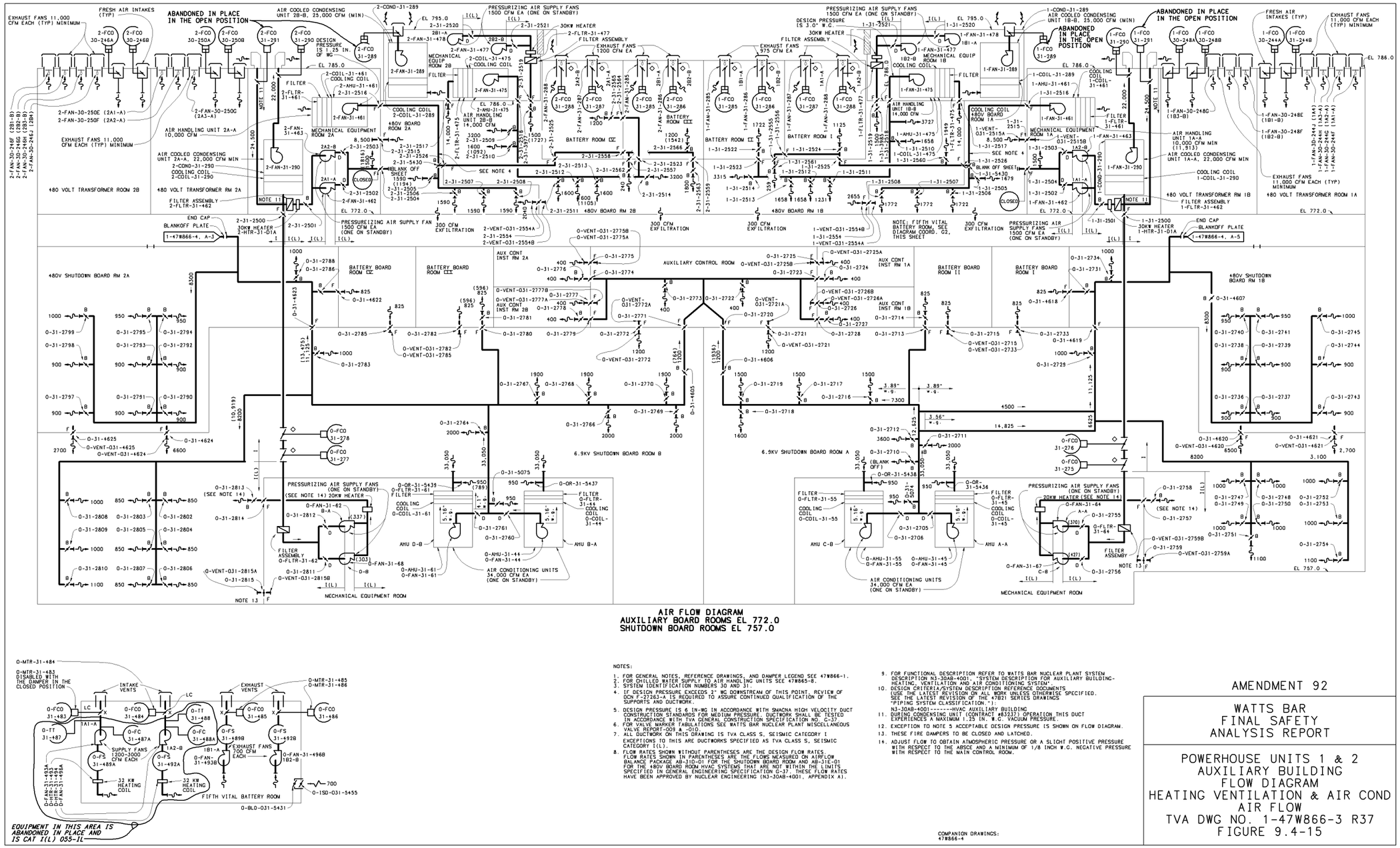


CAD MAINTAINED DRAWING

**Figure 9.4-15 Powerhouse Units 1 & 2 Auxiliary Building Flow Diagram for Heating, Ventilation and Air Conditioning Air Flow**

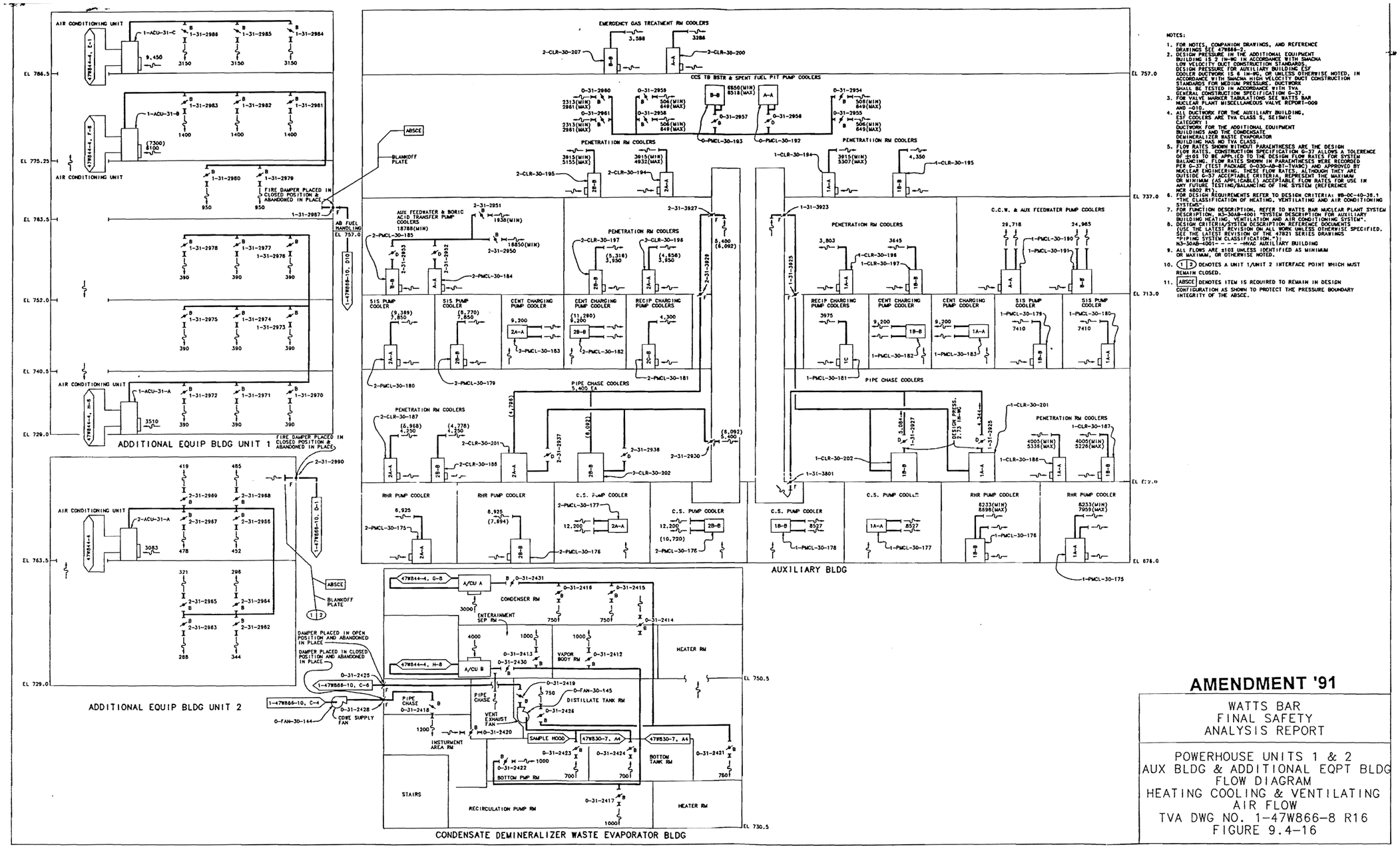


NOTES:

1. FOR NOTES, COMPANION DRAWINGS, AND REFERENCE DRAWINGS SEE 47W844-2.
2. DESIGN PRESSURE IN THE ADDITIONAL EQUIPMENT BUILDING IS 2 IN-WG IN ACCORDANCE WITH SMACNA LOW VELOCITY DUCT CONSTRUCTION STANDARDS. DESIGN PRESSURE FOR AUXILIARY BUILDING ESF COOLER DUCTWORK IS 6 IN-WG, OR UNLESS OTHERWISE NOTED, IN ACCORDANCE WITH SMACNA HIGH VELOCITY DUCT CONSTRUCTION STANDARDS FOR MEDIUM PRESSURE. DUCTWORK SHALL BE TESTED IN ACCORDANCE WITH TVA: GENERAL CONSTRUCTION SPECIFICATION G-37.
3. FOR VALVE MARKER TABULATIONS SEE WATTS BAR NUCLEAR PLANT MISCELLANEOUS VALVE REPORT-009 AND -010.
4. ALL DUCTWORK FOR THE AUXILIARY BUILDING, ESF COOLERS ARE TVA CLASS S, SEISMIC CATEGORY I
   DUCTWORK FOR THE ADDITIONAL EQUIPMENT BUILDINGS AND THE CONDENSATE DEMINERALIZER BASTE EVAPORATOR BUILDING HAS NO TVA CLASS.
5. FLOW RATES SHOWN WITHOUT PARANTHESES ARE THE DESIGN FLOW RATES. CONSTRUCTION SPECIFICATION G-37 ALLOWS A TOLERENCE OF ±10% TO BE APPLIED TO THE DESIGN FLOW RATES FOR SYSTEM BALANCING. FLOW RATES SHOWN IN PARANTHESES WERE RECORDED PER G-37 (TEST PACKAGE 0-030-AB-BI-TVABC) AND APPROVED BY NUCLEAR ENGINEERING. THESE FLOW RATES, ALTHOUGH THCY ARE OUTSIDE G-37 ACCEPTABLE CRITERIA, REPRESENT THE MAXIMUM OR MINIMUM (AS APPLICABLE) ACCEPTABLE FLOW RATES FOR USE IN ANY FUTURE TESTING/BALANCING OF THE SYSTEM (REFERENCE NCR 4802 R1).
6. FOR DESIGN REQUIREMENTS REFER TO DESIGN CRITERIA: WB-DC-40-38.1 "THE CLASSIFICATION OF HEATING, VENTILATING AND AIR CONDITIONING SYSTEMS".
7. FOR FUNCTION DESCRIPTION, REFER TO WATTS BAR NUCLEAR PLANT SYSTEM DESCRIPTION, N3-30AB-4001 "SYSTEM DESCRIPTION FOR AUXILIARY BUILDING HEATING, VENTILATION AND AIR CONDITIONING SYSTEM".
8. DESIGN CRITERIA/SYSTEM DESCRIPTION REFERENCE DOCUMENTS (USE THE LATEST REVISION ON ALL WORK UNLESS OTHERWISE SPECIFIED. SEE THE LATEST REVISION OF THE 47B21 SERIES DRAWINGS "PIPING SYSTEM CLASSIFICATION:"):
   N3-30AB-4001- - - - -HVAC AUXILIARY BUILDING
9. ALL FLOWS ARE ±10% UNLESS IDENTIFIED AS MINIMUM OR MAXIMUM, OR OTHERWISE NOTED.
10. (1 | 2) DENOTES A UNIT 1/UNIT 2 INTERFACE POINT WHICH MUST REMAIN CLOSED.
11. (ABSCE) DENOTES ITEM IS REQUIRED TO REMAIN IN DESIGN CONFIGURATION AS SHOWN TO PROTECT THE PRESSURE BOUNDARY INTEGRITY OF THE ABSCE.

**Figure 9.4-16 Powerhouse Units 1 & 2 Auxiliary Building & Additional Eqpt Bldg Flow Diagram for Heating, Cooling & Ventilating Air Flow**

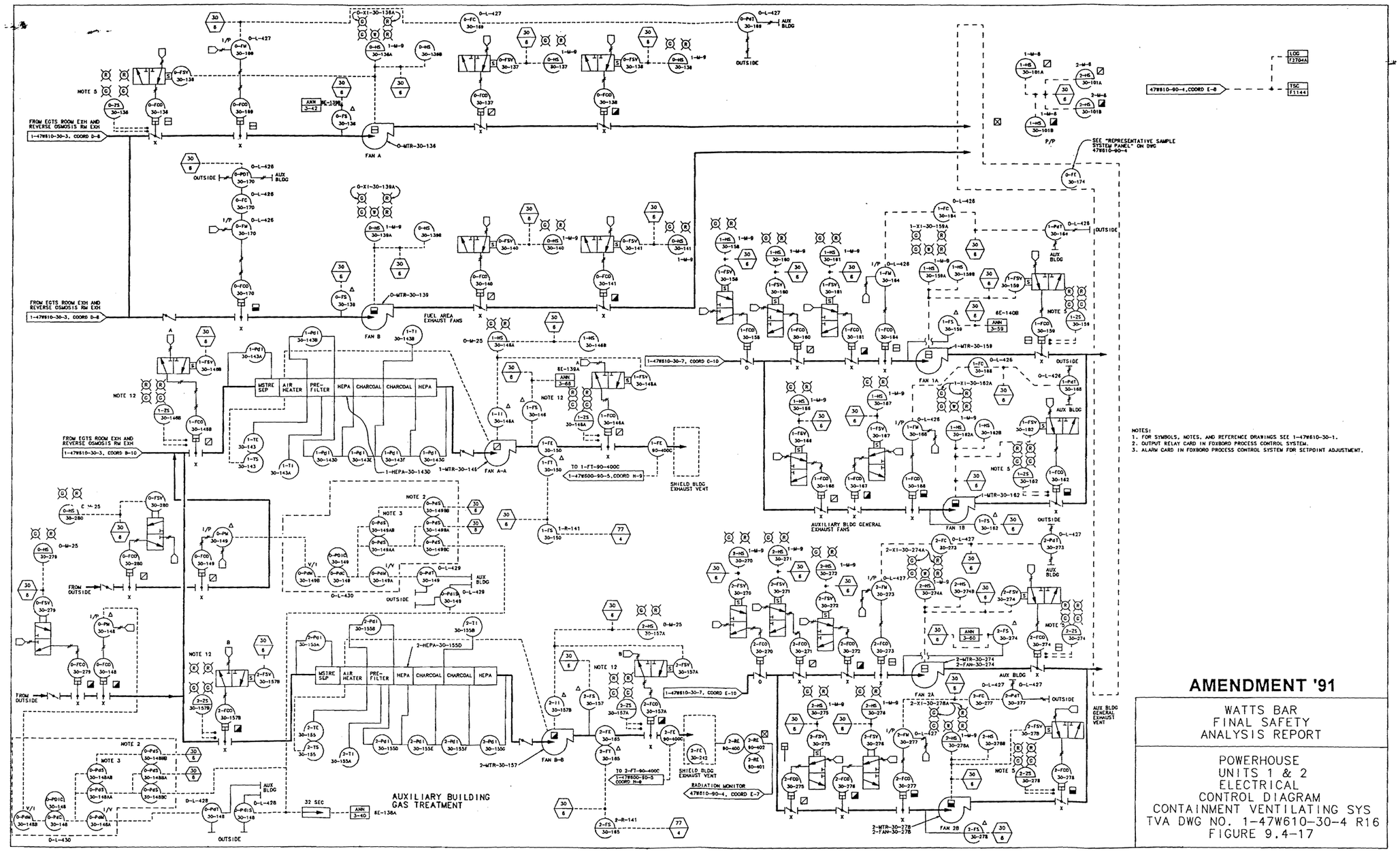


Figure 9.4-17 Powerhouse Units 1 & 2 Electrical Control Diagram for Containment Ventilating System

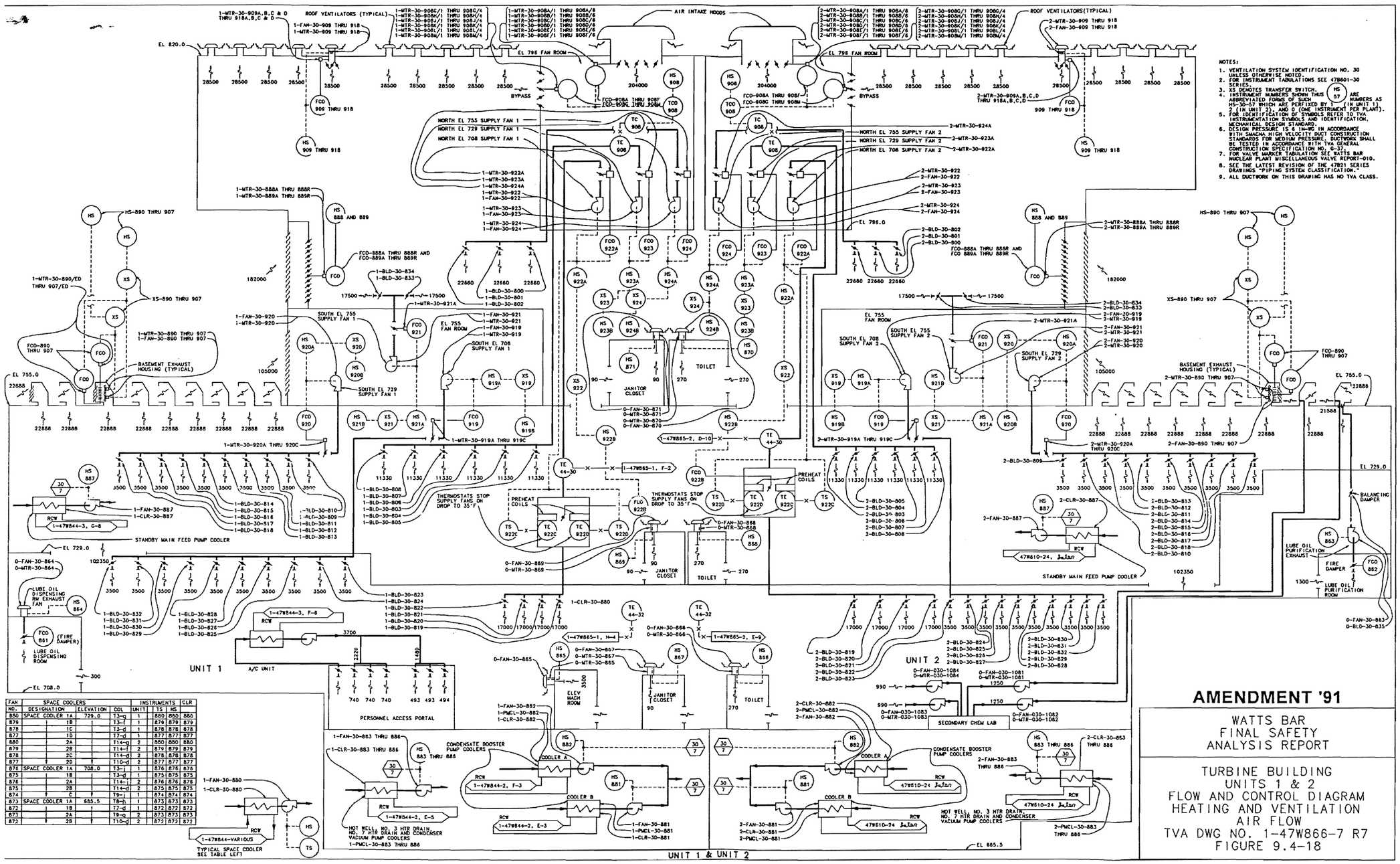


| FAN NO. | SPACE COOLERS DESIGNATION | | ELEVATION | COIL | INSTRUMENTS UNIT | TS | HS | CLR |
|---|---|---|---|---|---|---|---|---|
| 850 | SPACE COOLER 1A | | 729.0 | T3-g | 1 | 880 | 880 | 880 |
| 879 | | 1B | | T3-f | 1 | 879 | 879 | 879 |
| 878 | | 1C | | T3-d | 1 | 878 | 878 | 878 |
| 877 | | 1D | | T7-g | 1 | 877 | 877 | 877 |
| 880 | | 2A | | T14-g | 2 | 880 | 880 | 880 |
| 879 | | 2B | | T14-f | 2 | 879 | 879 | 879 |
| 878 | | 2C | | T14-d | 2 | 878 | 878 | 878 |
| 877 | | 2D | | T10-d | 2 | 877 | 877 | 877 |
| 876 | SPACE COOLER 1A | | 708.0 | T3-j | 1 | 876 | 876 | 876 |
| 875 | | 1B | | T3-d | 1 | 875 | 875 | 875 |
| 876 | | 2A | | T14-j | 2 | 876 | 876 | 876 |
| 875 | | 2B | | T14-d | 2 | 875 | 875 | 875 |
| 874 | | C | | T9-j | 1 | 874 | 874 | 874 |
| 873 | SPACE COOLER 1A | | 685.5 | T8-h | 1 | 873 | 873 | 873 |
| 872 | | 1B | | T7-d | 1 | 872 | 872 | 872 |
| 873 | | 2A | | T9-g | 2 | 873 | 873 | 873 |
| 872 | | 2B | | T10-d | 2 | 872 | 872 | 872 |

Figure 9.4-18 Turbine Building Units 1 & 2 and Control Flow Diagram for Heating and Ventilating Air Flow

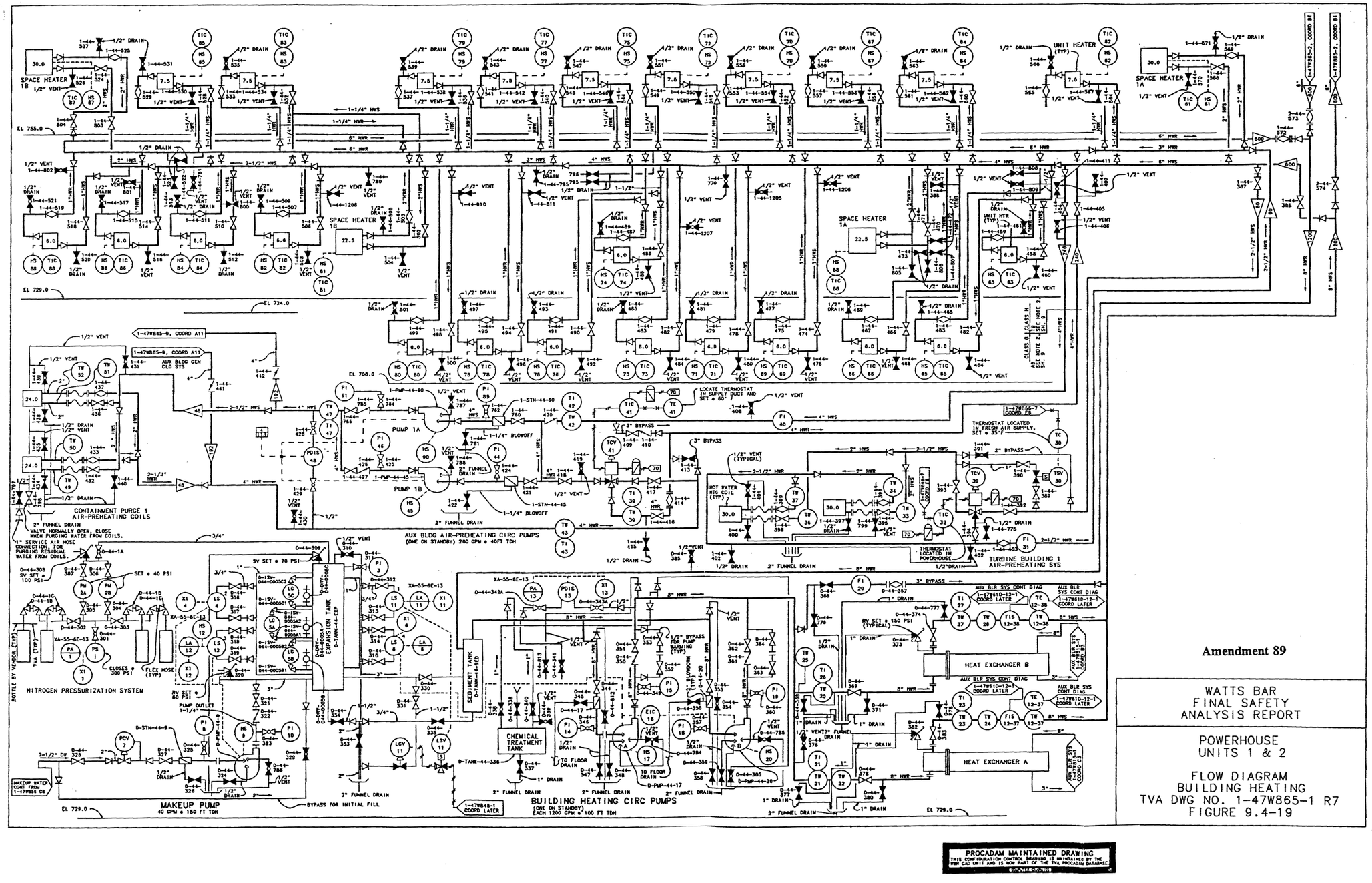


Amendment 89

WATTS BAR
FINAL SAFETY
ANALYSIS REPORT

POWERHOUSE
UNITS 1 & 2

FLOW DIAGRAM
BUILDING HEATING
TVA DWG NO. 1-47W865-1 R7
FIGURE 9.4-19

**Figure 9.4-19 Powerhouse Units 1 & 2 Flow Diagram Building Heating**

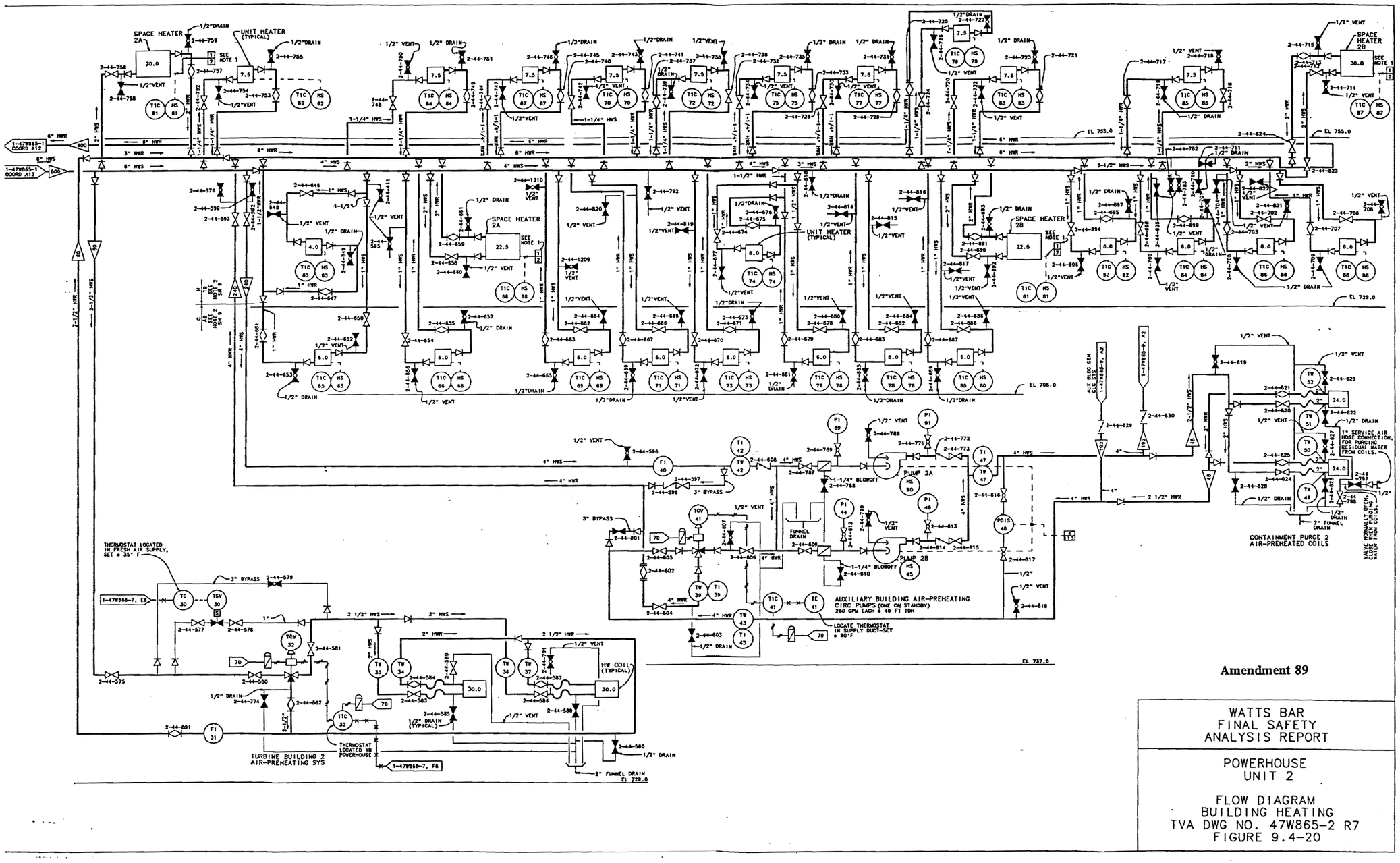


Figure 9.4-20 Powerhouse Unit 2 Flow Diagram Building Heating

Security-Related Information - Withheld Under 10CFR2.390



Figure 9.4-21 Pumping Stations Units 1 & 2 Mechanical Heating and Ventilating

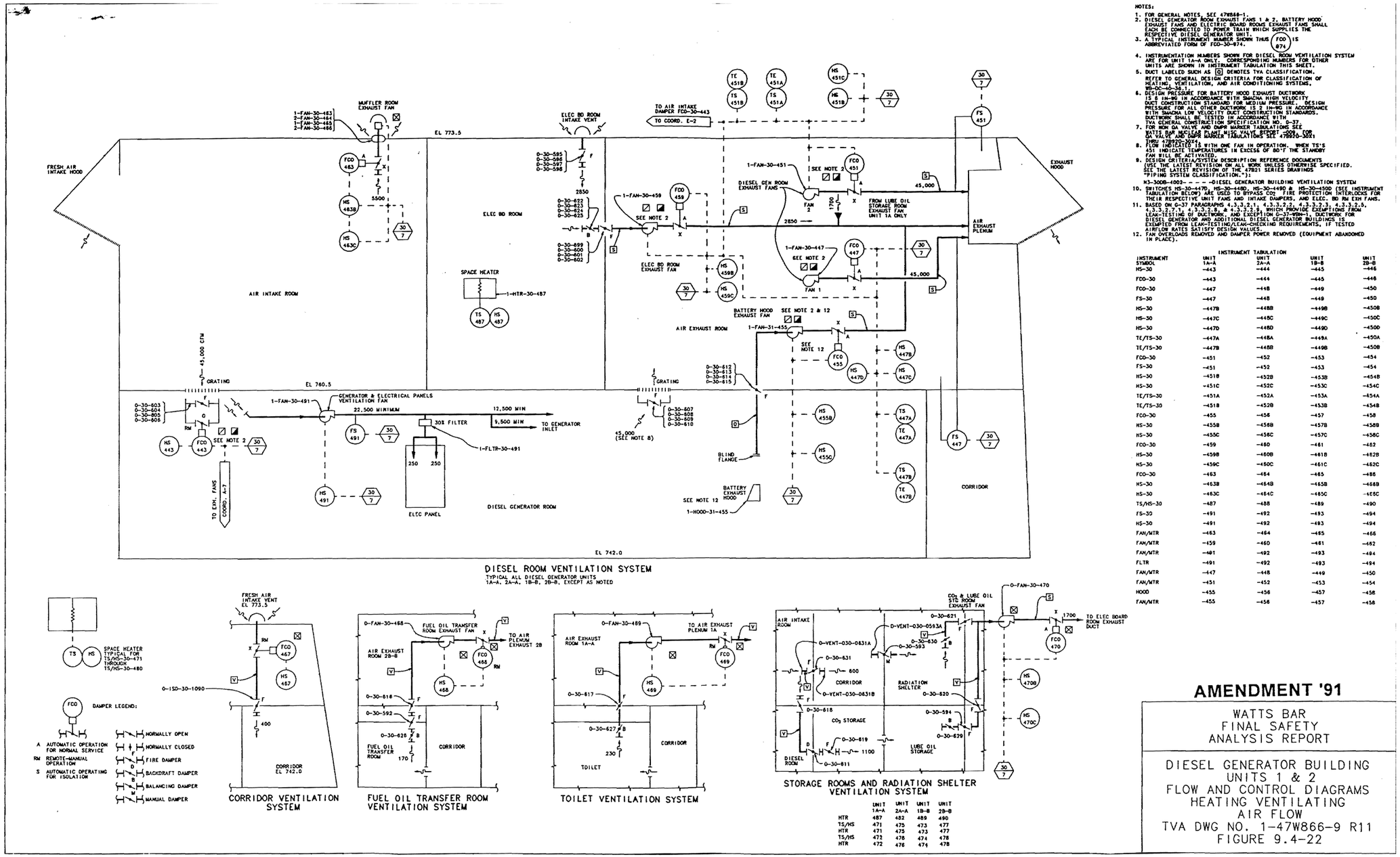


NOTES:

1. FOR GENERAL NOTES, SEE 47W848-1.
2. DIESEL GENERATOR ROOM EXHAUST FANS 1 & 2, BATTERY HOOD EXHAUST FANS AND ELECTRIC BOARD ROOMS EXHAUST FANS SHALL EACH BE CONNECTED TO POWER TRAIN WHICH SUPPLIES THE RESPECTIVE DIESEL GENERATOR UNIT.
3. A TYPICAL INSTRUMENT NUMBER SHOWN THUS FCO 874 IS ABBREVIATED FORM OF FCO-30-874.
4. INSTRUMENTATION NUMBERS SHOWN FOR DIESEL ROOM VENTILATION SYSTEM ARE FOR UNIT 1A-A ONLY. CORRESPONDING NUMBERS FOR OTHER UNITS ARE SHOWN IN INSTRUMENT TABULATION THIS SHEET.
5. DUCT LABELED SUCH AS [D] DENOTES TVA CLASSIFICATION. REFER TO GENERAL DESIGN CRITERIA FOR CLASSIFICATION OF HEATING, VENTILATION, AND AIR CONDITIONING SYSTEMS, WB-DC-40-30.1.
6. DESIGN PRESSURE FOR BATTERY HOOD EXHAUST DUCTWORK IS 8 IN-WG IN ACCORDANCE WITH SMACNA HIGH VELOCITY DUCT CONSTRUCTION STANDARD FOR MEDIUM PRESSURE. DESIGN PRESSURE FOR ALL OTHER DUCTWORK IS 2 IN-WG IN ACCORDANCE WITH SMACNA LOW VELOCITY DUCT CONSTRUCTION STANDARDS. DUCTWORK SHALL BE TESTED IN ACCORDANCE WITH TVA GENERAL CONSTRUCTION SPECIFICATION NO. G-37.
7. FOR NON DA VALVE AND DAMPER MARKER TABULATIONS SEE WATTS BAR INCLEAR PLANT MISC VALVE REPORT -0005, FOR DA VALVE AND DAMPER MARKER TABULATIONS SEE 47B820-30541 THRU 47B820-30543.
8. FLOW INDICATED IS WITH ONE FAN IN OPERATION. WHEN TS'S 451 INDICATE TEMPERATURES IN EXCESS OF 80°F THE STANDBY FAN WILL BE ACTIVATED.
9. DESIGN CRITERIA/SYSTEM DESCRIPTION REFERENCE DOCUMENTS (USE THE LATEST REVISION ON ALL WORK UNLESS OTHERWISE SPECIFIED. SEE THE LATEST REVISION OF THE 47B21 SERIES DRAWINGS "PIPING SYSTEM CLASSIFICATION."):
   N3-30DB-4002- - - - -DIESEL GENERATOR BUILDING VENTILATION SYSTEM
10. SWITCHES HS-30-447D, HS-30-449D, HS-30-449B & HS-30-450D (SEE INSTRUMENT TABULATION BELOW) ARE USED TO BYPASS CO2 FIRE PROTECTION INTERLOCKS FOR THEIR RESPECTIVE UNIT FANS AND INTAKE DAMPERS, AND ELEC. BD RM EXH FANS.
11. BASED ON G-37 PARAGRAPHS 4.3.3.2.1, 4.3.3.2.2, 4.3.3.2.3, 4.3.3.2.5, 4.3.3.2.7.1, 4.3.3.2.8, & 4.3.3.2.9, WHICH PROVIDE EXEMPTIONS FROM LEAK-TESTING OF DUCTWORK, AND EXCEPTION G-37-WBN-1, DUCTWORK FOR DIESEL GENERATOR AND ADDITIONAL DIESEL GENERATOR BUILDINGS IS EXEMPTED FROM LEAK-TESTING/LEAK-CHECKING REQUIREMENTS, IF TESTED AIRFLOW RATES SATISFY DESIGN VALUES.
12. FAN OVERLOADS REMOVED AND DAMPER POWER REMOVED (EQUIPMENT ABANDONED IN PLACE).

INSTRUMENT TABULATION

| INSTRUMENT SYMBOL | UNIT 1A-A | UNIT 2A-A | UNIT 1B-B | UNIT 2B-B |
|---|---|---|---|---|
| HS-30 | -443 | -444 | -445 | -446 |
| FCO-30 | -443 | -444 | -445 | -446 |
| FCO-30 | -447 | -448 | -449 | -450 |
| FS-30 | -447 | -448 | -449 | -450 |
| HS-30 | -447B | -448B | -449B | -450B |
| HS-30 | -447C | -448C | -449C | -450C |
| HS-30 | -447D | -448D | -449D | -450D |
| TE/TS-30 | -447A | -448A | -449A | -450A |
| TE/TS-30 | -447B | -448B | -449B | -450B |
| FCO-30 | -451 | -452 | -453 | -454 |
| FS-30 | -451 | -452 | -453 | -454 |
| HS-30 | -451B | -452B | -453B | -454B |
| HS-30 | -451C | -452C | -453C | -454C |
| TE/TS-30 | -451A | -452A | -453A | -454A |
| TE/TS-30 | -451B | -452B | -453B | -454B |
| FCO-30 | -455 | -456 | -457 | -458 |
| HS-30 | -455B | -456B | -457B | -458B |
| HS-30 | -455C | -456C | -457C | -458C |
| FCO-30 | -459 | -460 | -461 | -462 |
| HS-30 | -459B | -460B | -461B | -462B |
| HS-30 | -459C | -460C | -461C | -462C |
| FCO-30 | -463 | -464 | -465 | -466 |
| HS-30 | -463B | -464B | -465B | -466B |
| HS-30 | -463C | -464C | -465C | -466C |
| TS/HS-30 | -487 | -488 | -489 | -490 |
| FS-30 | -491 | -492 | -493 | -494 |
| HS-30 | -491 | -492 | -493 | -494 |
| FAN/MTR | -463 | -464 | -465 | -466 |
| FAN/MTR | -459 | -460 | -461 | -462 |
| FAN/MTR | -491 | -492 | -493 | -494 |
| FLTR | -491 | -492 | -493 | -494 |
| FAN/MTR | -447 | -448 | -449 | -450 |
| FAN/MTR | -451 | -452 | -453 | -454 |
| HOOD | -455 | -456 | -457 | -458 |
| FAN/MTR | -455 | -456 | -457 | -458 |

| | UNIT 1A-A | UNIT 2A-A | UNIT 1B-B | UNIT 2B-B |
|---|---|---|---|---|
| HTR | 487 | 482 | 489 | 490 |
| TS/HS | 471 | 475 | 473 | 477 |
| HTR | 471 | 475 | 473 | 477 |
| TS/HS | 472 | 476 | 474 | 478 |
| HTR | 472 | 476 | 474 | 478 |

**Figure 9.4-22 Diesel Generator Building Units 1 & 2 Flow and Control Diagram for Heating, Ventilating Air Flow**

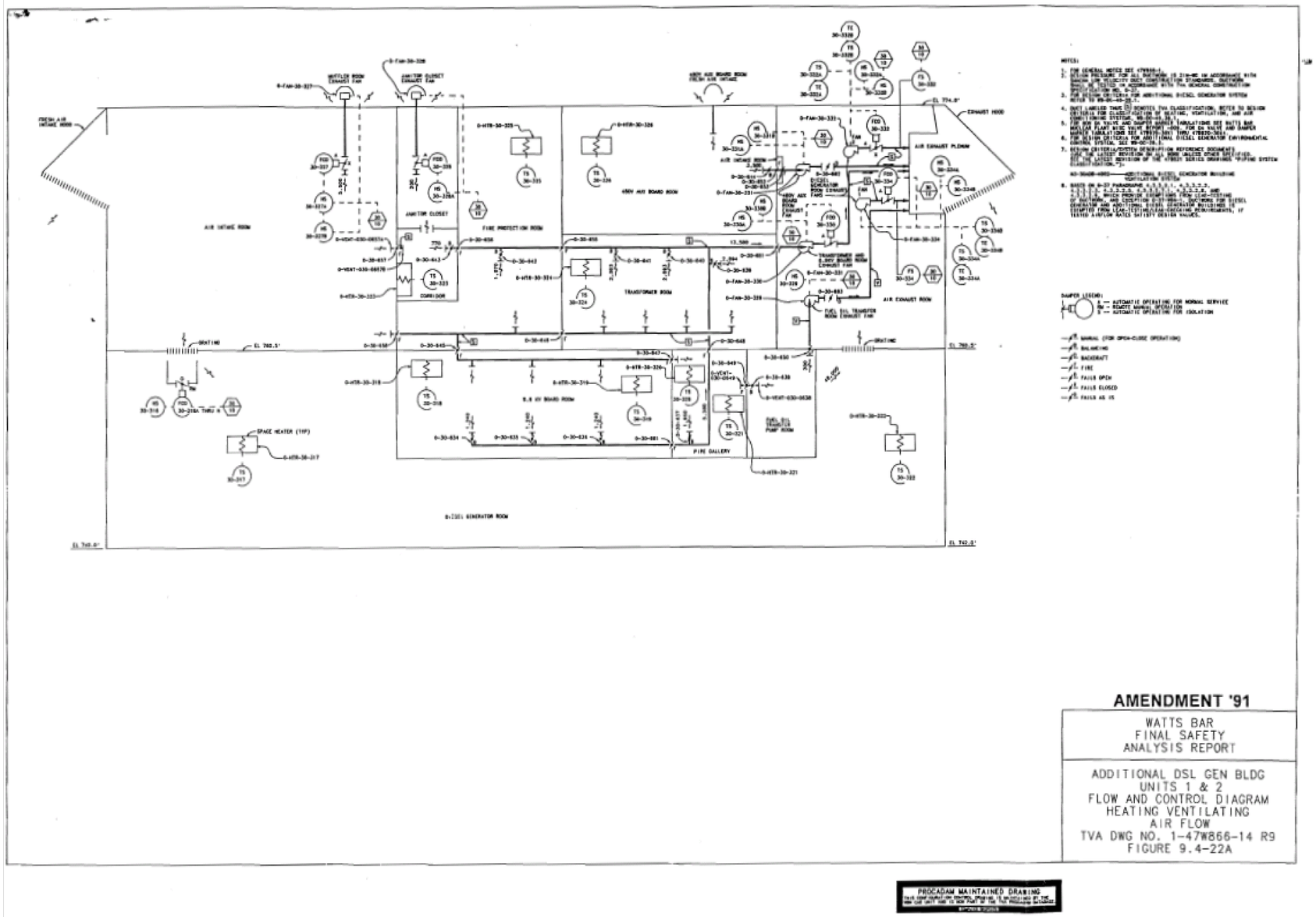


Figure 9.4-22a Additional Diesel Generator Building Units 1 & 2 Flow and Control Diagram for Heating and Ventilating Air Flow

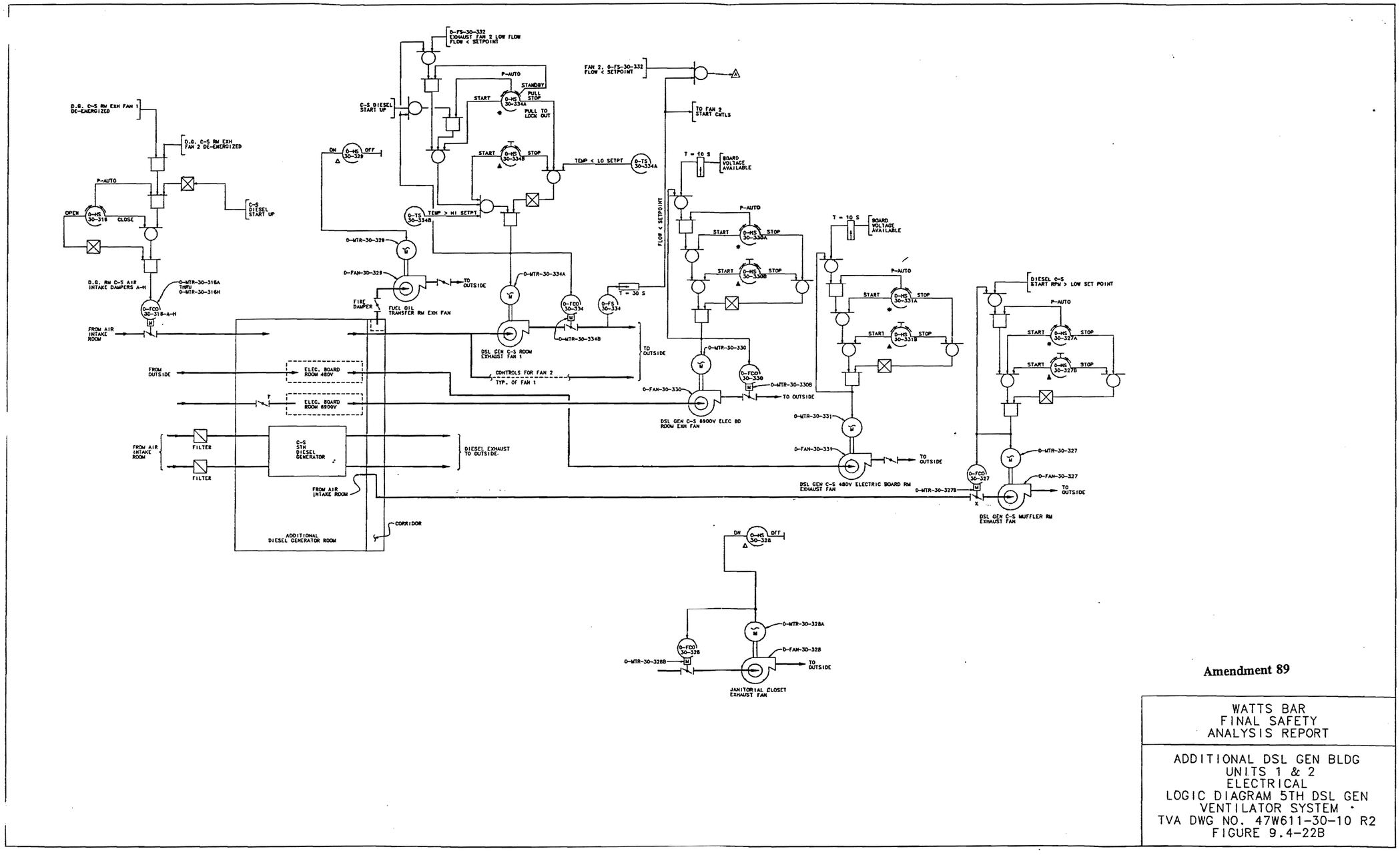


Amendment 89

WATTS BAR
FINAL SAFETY
ANALYSIS REPORT

ADDITIONAL DSL GEN BLDG
UNITS 1 & 2
ELECTRICAL
LOGIC DIAGRAM 5TH DSL GEN
VENTILATOR SYSTEM
TVA DWG NO. 47W611-30-10 R2
FIGURE 9.4-22B

PROCADAM MAINTAINED DRAWING
THIS CONFIGURATION CONTROL DRAWING IS MAINTAINED BY THE VBN CAD UNIT AND IS NOW PART OF THE TVA PROCADAM DATABASE

**Figure 9.4-22b Additional Diesel Generator Building Units 1 & 2 Electrical Logic Diagram for 5th Diesel Generator Ventilator System**

Security-Related Information - Withheld Under 10CFR2.390



Figure 9.4-22c Additional Diesel Generator Building Mechanical Heating and Ventilating

Security-Related Information - Withheld Under 10CFR2.390



Figure 9.4-23 Diesel Generator Building Mechanical Heating and Ventilating

Security-Related Information - Withheld Under 10CFR2.390



Figure 9.4-24 Diesel Generator Building Mechanical Heating and Ventilating

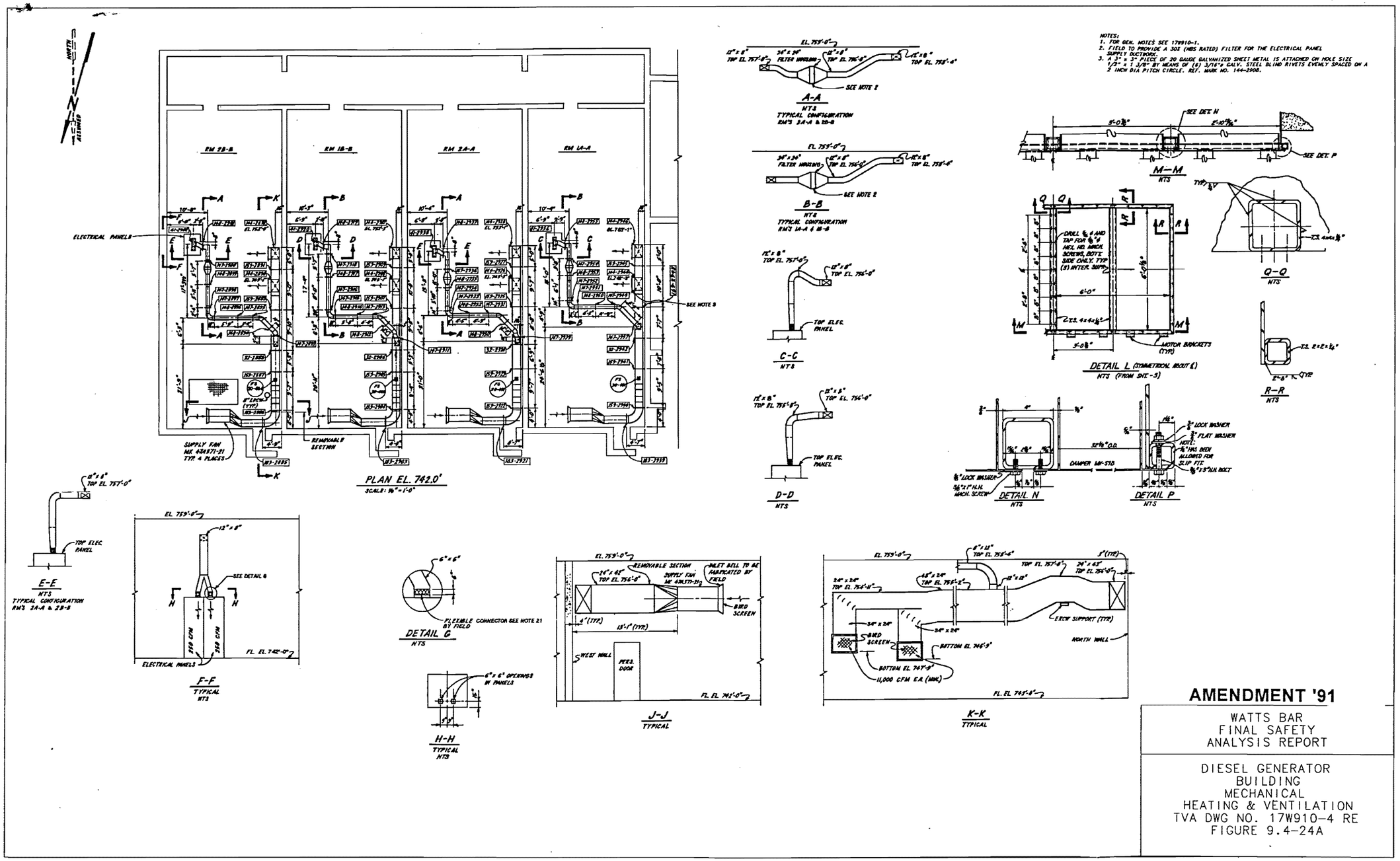


**AMENDMENT '91**

WATTS BAR
FINAL SAFETY
ANALYSIS REPORT

DIESEL GENERATOR
BUILDING
MECHANICAL
HEATING & VENTILATION
TVA DWG NO. 17W910-4 RE
FIGURE 9.4-24A

PROCADAM MAINTAINED DRAWING
THIS CONFIGURATION CONTROL DRAWING IS MAINTAINED BY THE WBN CAD UNIT AND IS NOW PART OF THE TVA PROCADAM DATABASE.

**Figure 9.4-24a Diesel Generator Building Mechanical Heating and Ventilation**

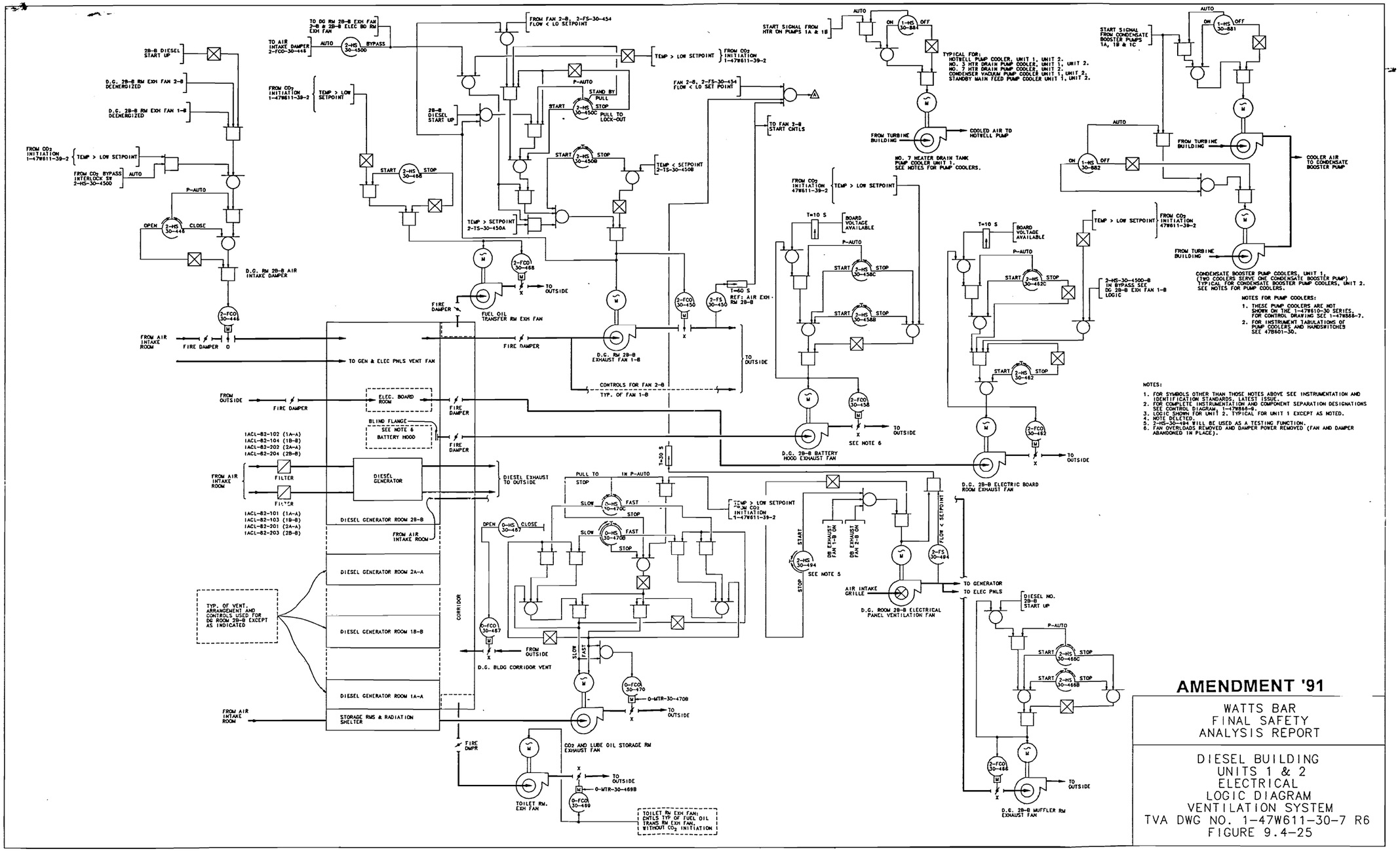


Figure 9.4-25 Diesel Building Units 1 & 2 Electrical Logic Diagram for Ventilation System

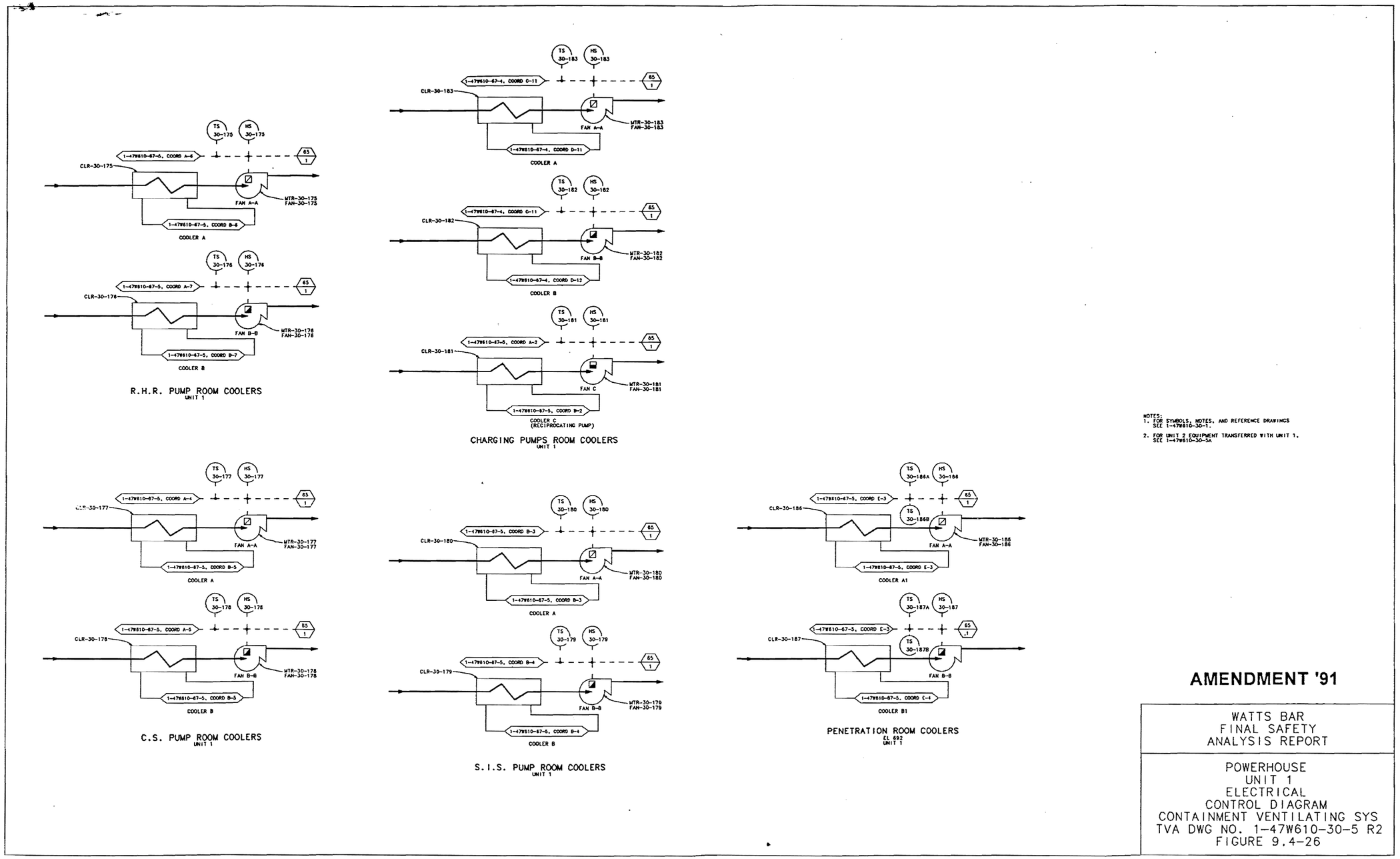


**Figure 9.4-26 Powerhouse Unit 1 Electrical Control Diagram for Containment Ventilation System**

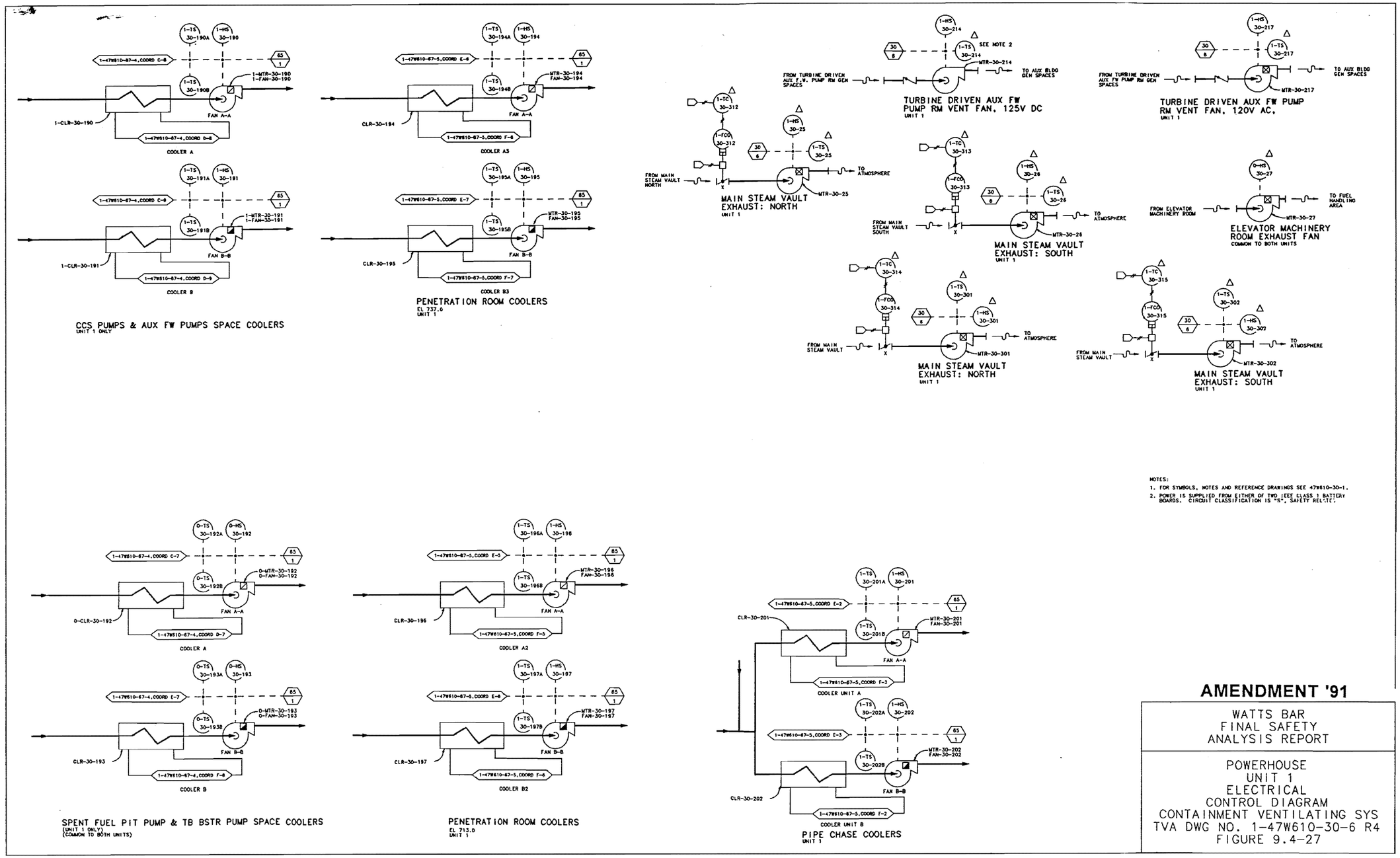


**Figure 9.4-27 Powerhouse Unit 1 Electrical Control Diagram for Containment Ventilation System**

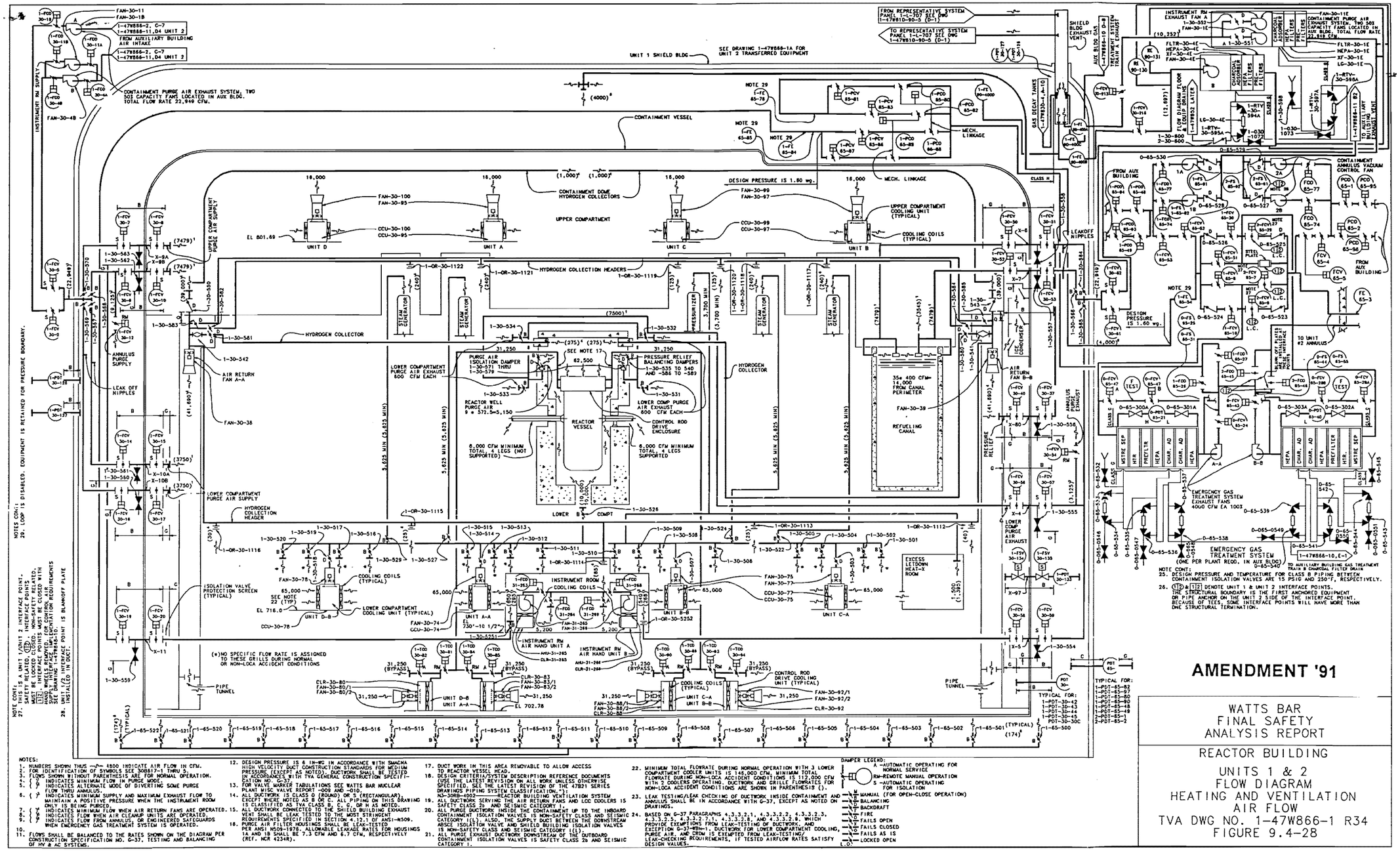


Figure 9.4-28 Reactor Building Units 1 & 2 Flow Diagram for Heating and Ventilation Air Flow

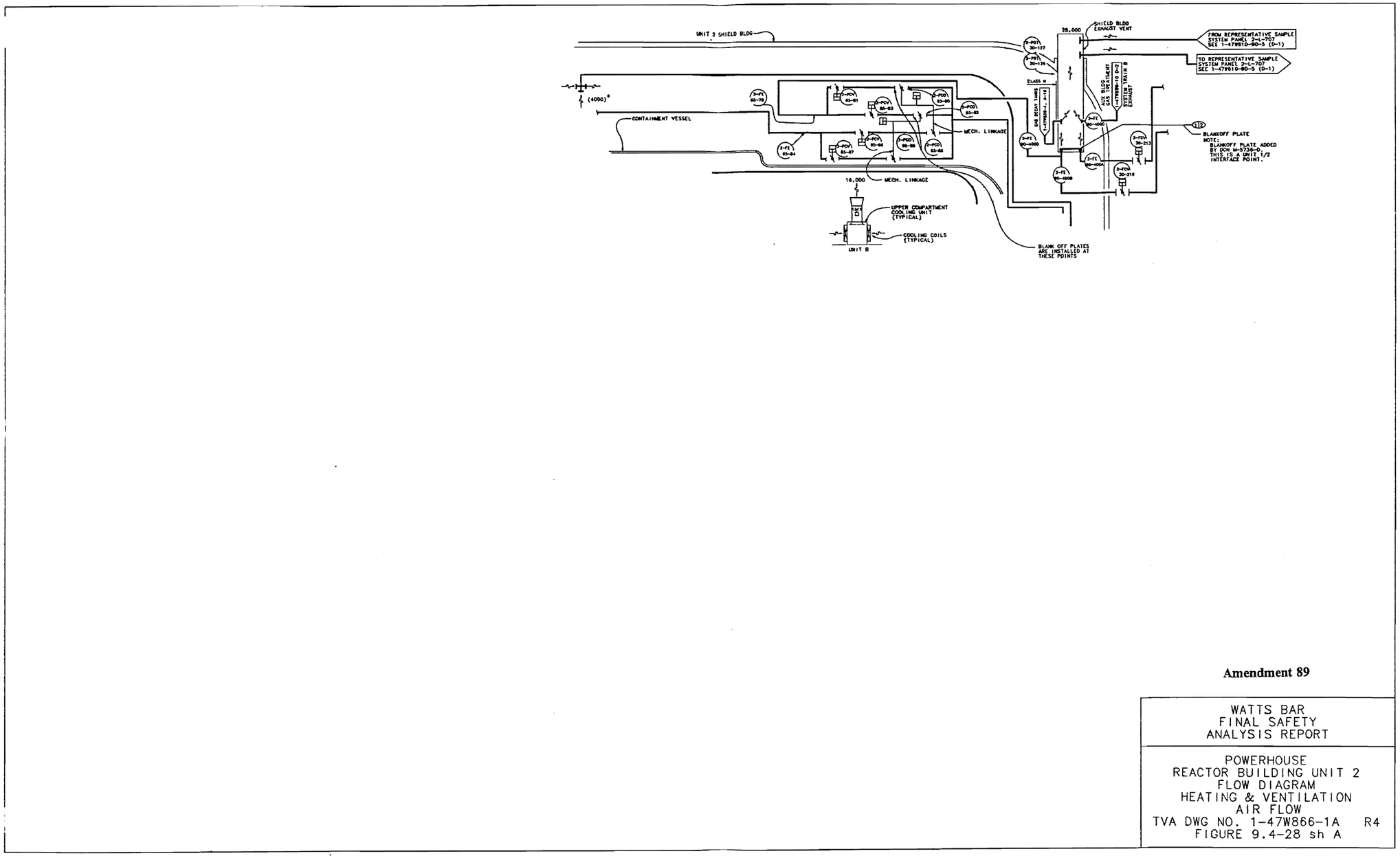


Amendment 89

WATTS BAR
FINAL SAFETY
ANALYSIS REPORT

POWERHOUSE
REACTOR BUILDING UNIT 2
FLOW DIAGRAM
HEATING & VENTILATION
AIR FLOW
TVA DWG NO. 1-47W866-1A R4
FIGURE 9.4-28 sh A

PROCADAM MAINTAINED DRAWING
THIS CONFIGURATION CONTROL DRAWING IS MAINTAINED BY THE MDH CAD UNIT AND IS NOW PART OF THE TVA PROCADAM DATABASE

**Figure 9.4-28a Powerhouse Reactor Building Unit 2 Flow Diagram Heating & Ventilation Air Flow**

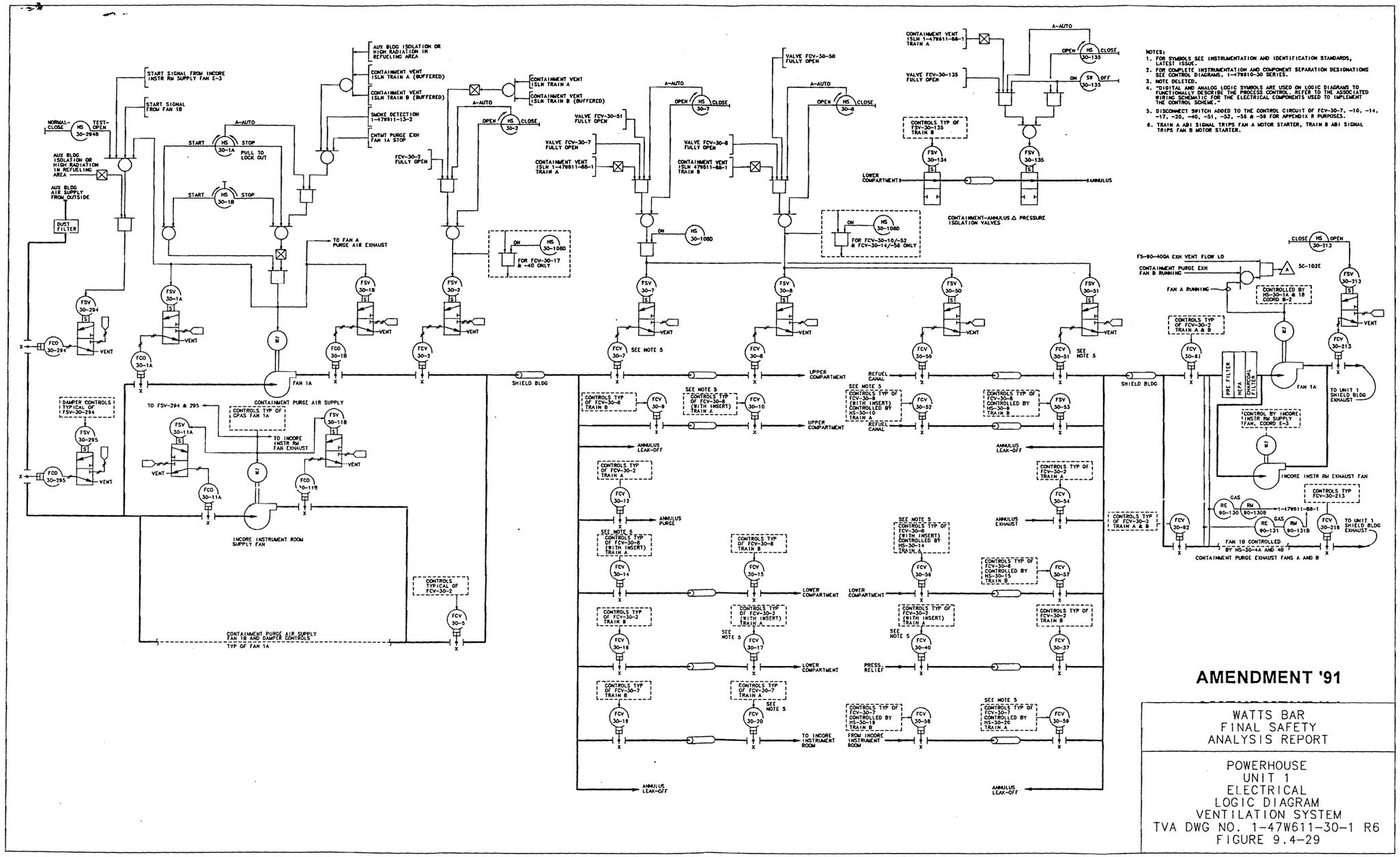


**Figure 9.4-29 Powerhouse Unit 1 Electrical Logic Diagram for Ventilation System**

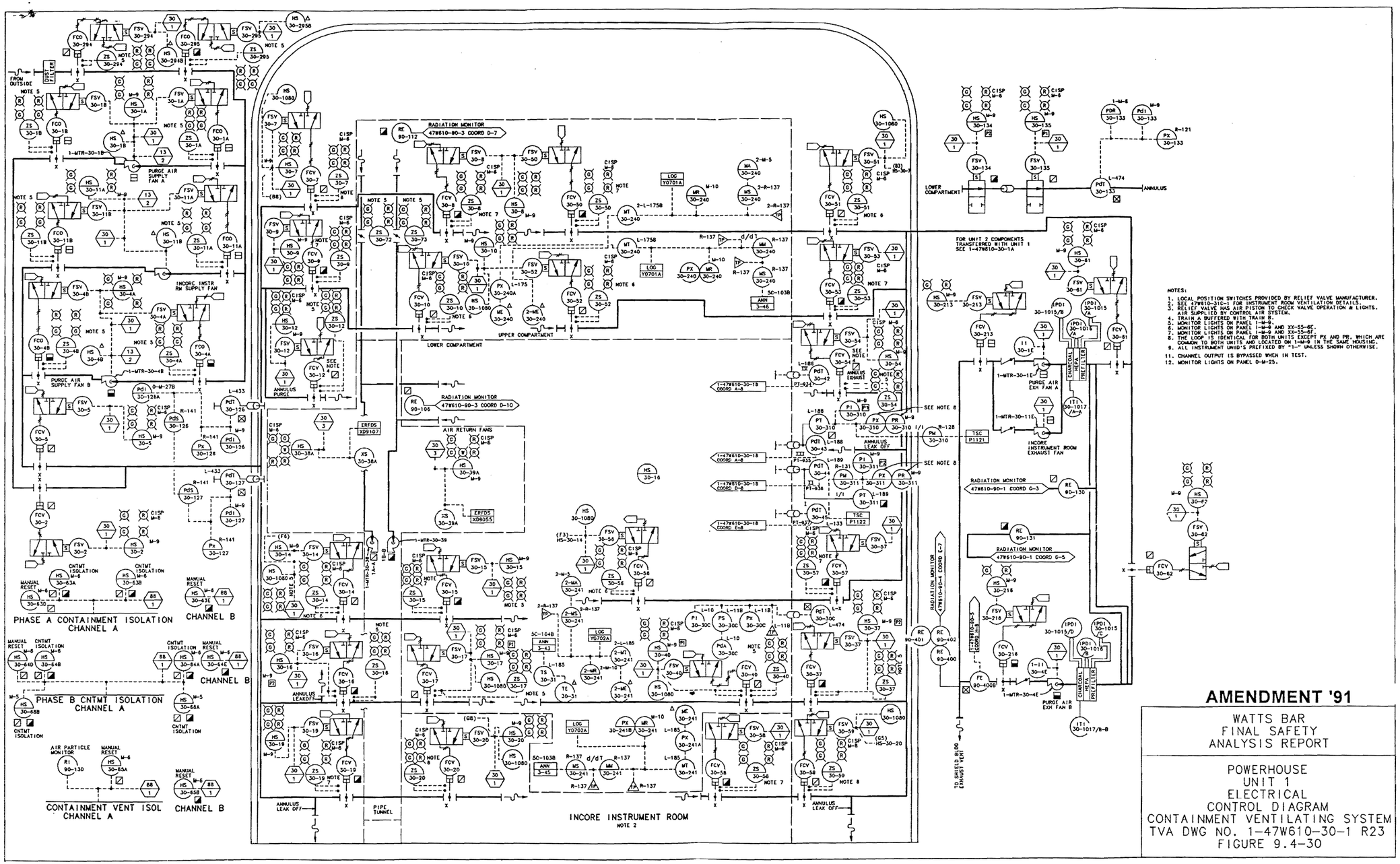


**Figure 9.4-30 Powerhouse Unit 1 Electrical Control Diagram for Containment Ventilating System**

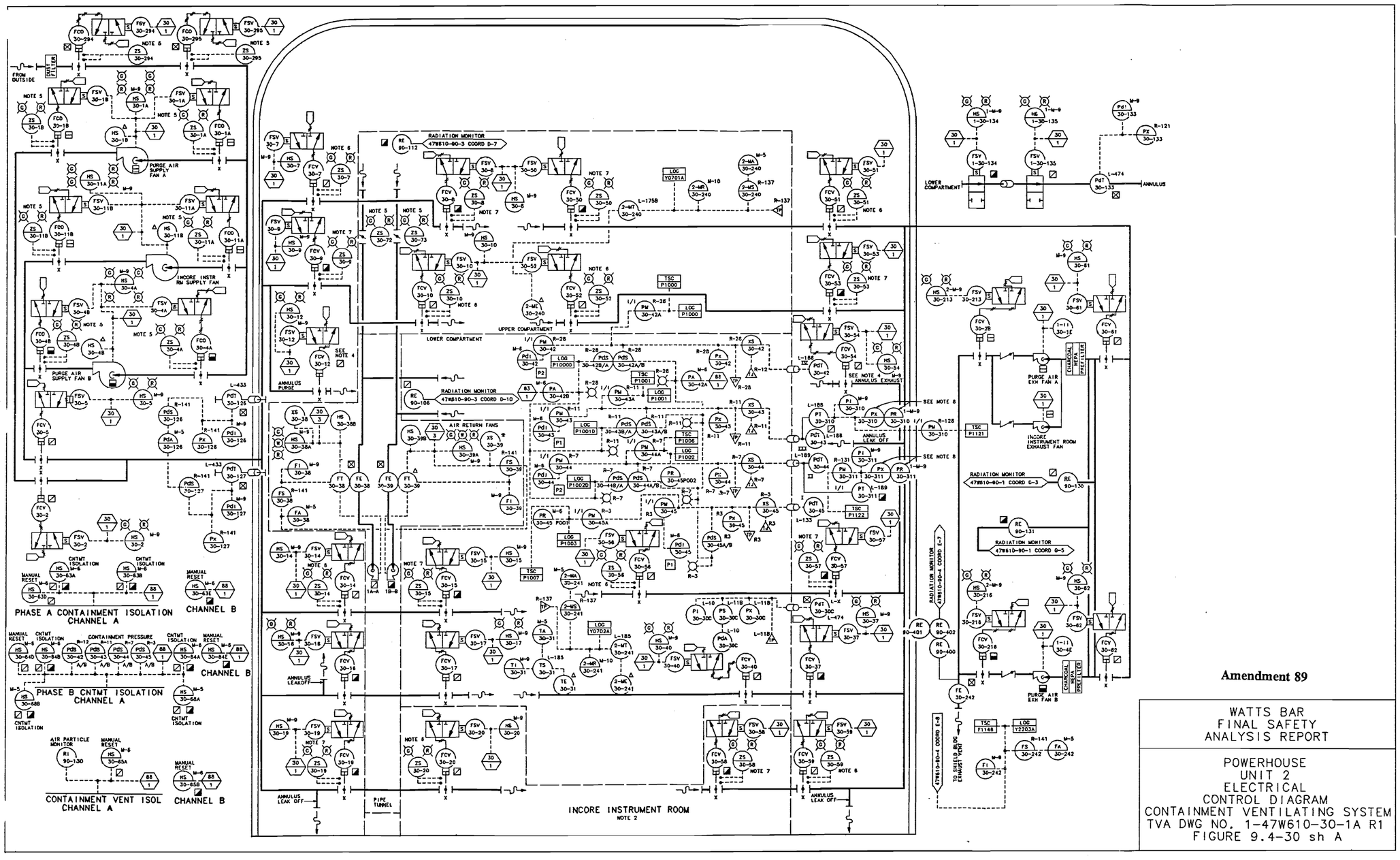


**Figure 9.4-30 Powerhouse Unit 2 Electrical Control Diagram Containment Ventilating System (Sheet A)**

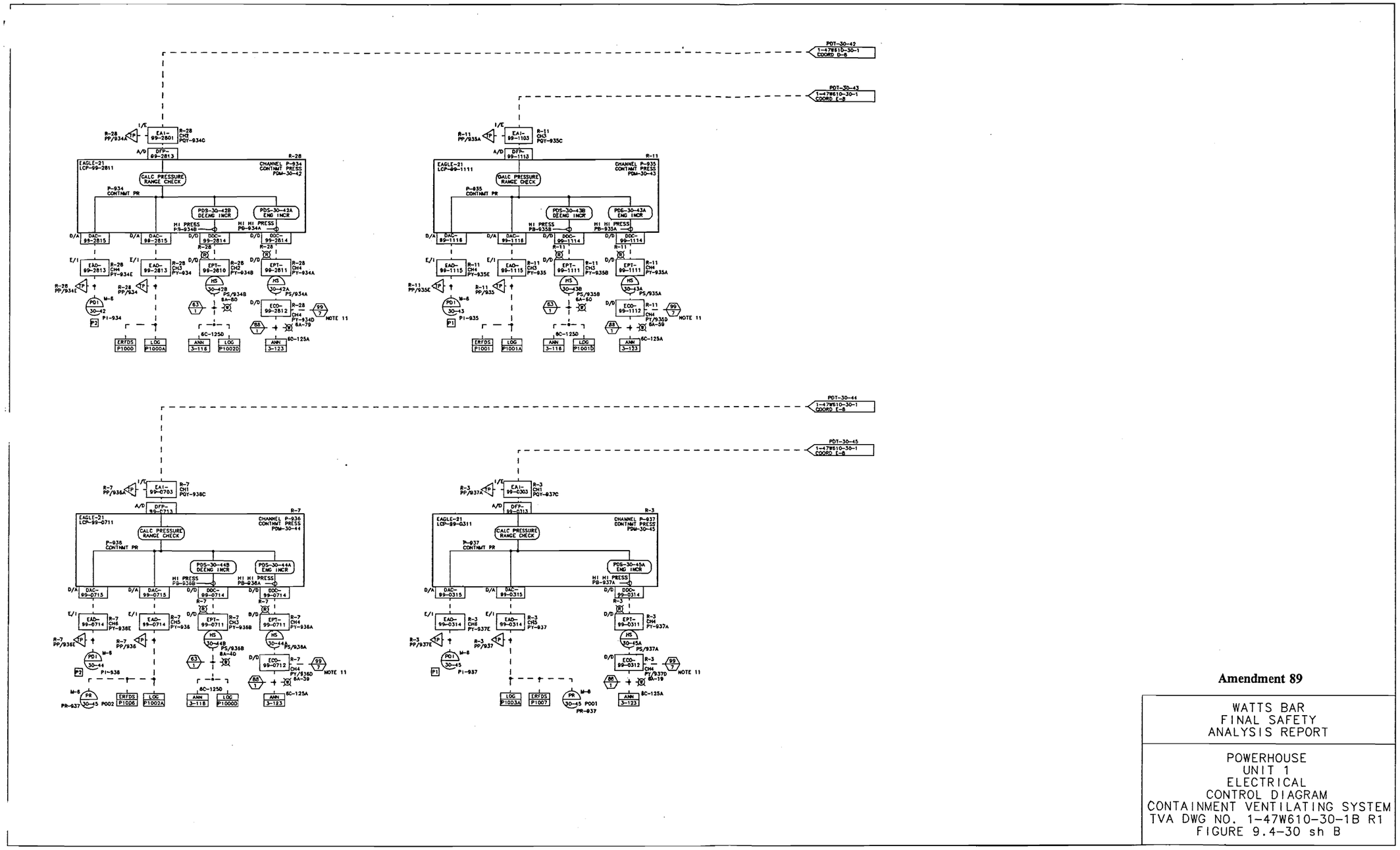


**Amendment 89**

WATTS BAR
FINAL SAFETY
ANALYSIS REPORT

POWERHOUSE
UNIT 1
ELECTRICAL
CONTROL DIAGRAM
CONTAINMENT VENTILATING SYSTEM
TVA DWG NO. 1-47W610-30-1B R1
FIGURE 9.4-30 sh B

PROCADAM MAINTAINED DRAWING
THIS CONFIGURATION CONTROL DRAWING IS MAINTAINED BY THE WBN CAD UNIT AND IS NOW PART OF THE TVA PROCADAM DATABASE

**Figure 9.4-30 Powerhouse Unit 1 Electrical Control Diagram Containment Ventilating System (Sheet B)**

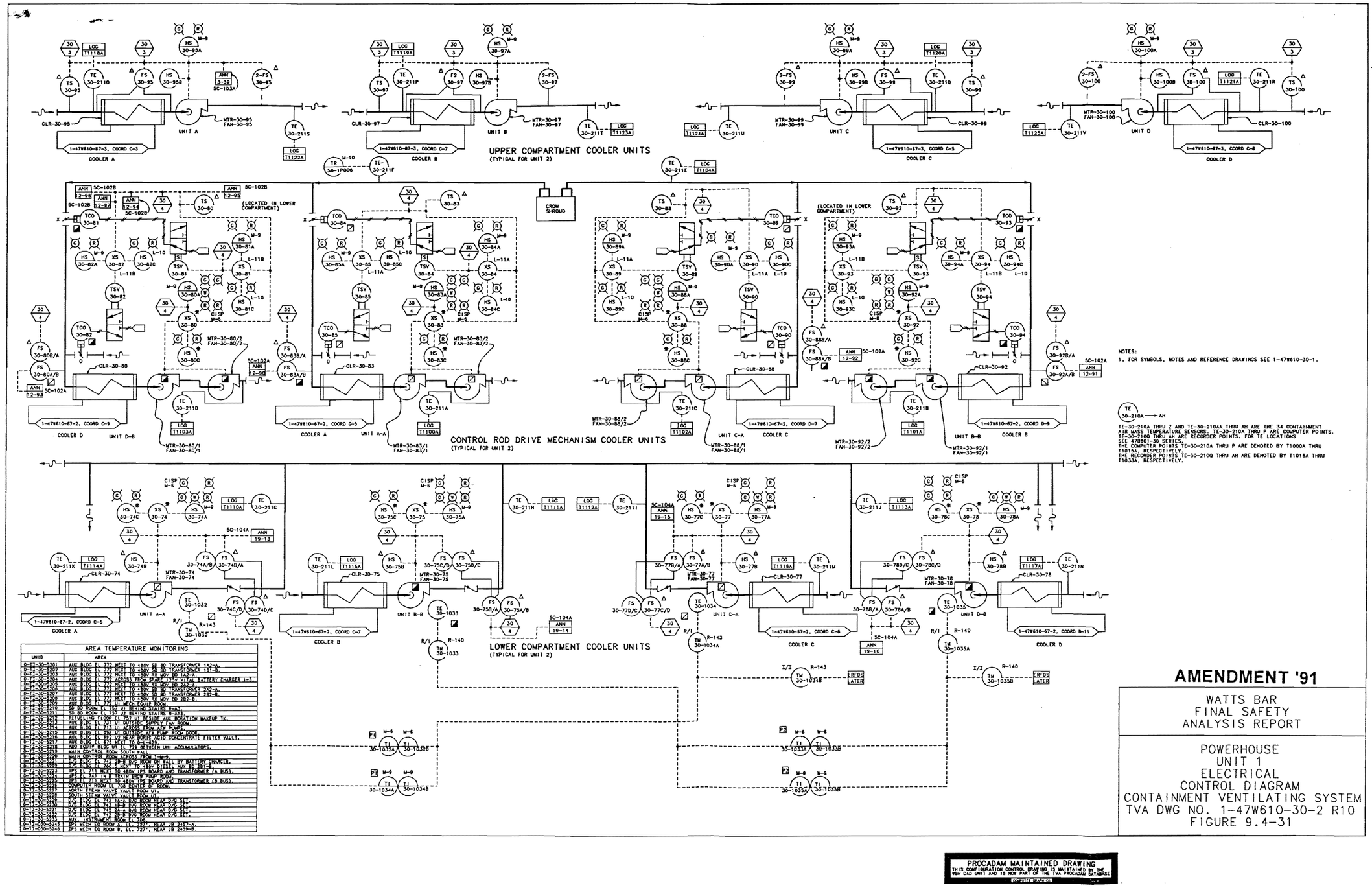


**Figure 9.4-31 Powerhouse Unit 1 Electrical Control Diagram for Containment Ventilating System**

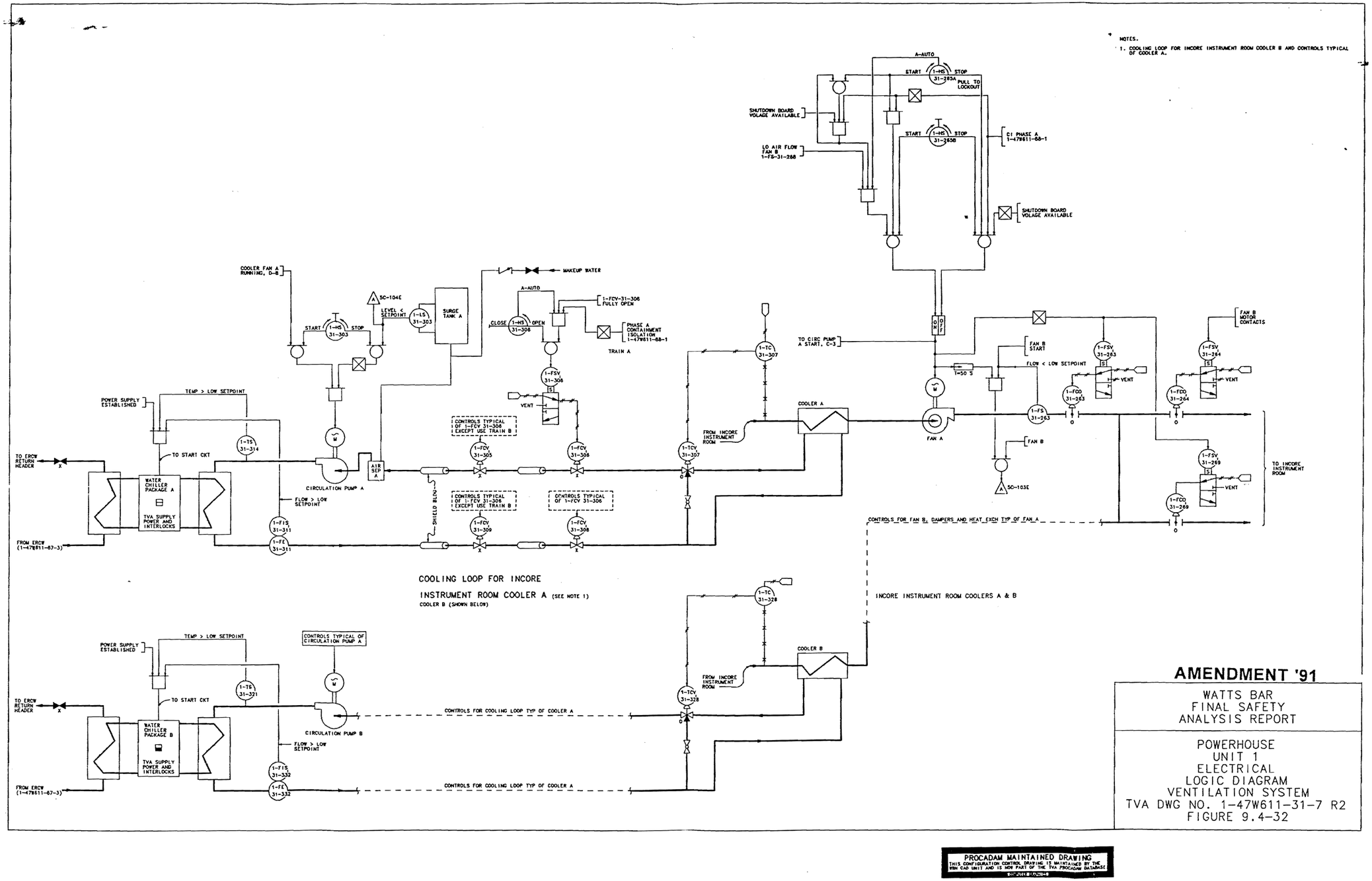


**Figure 9.4-32 Powerhouse Unit 1 Logic Diagram for Ventilation System**

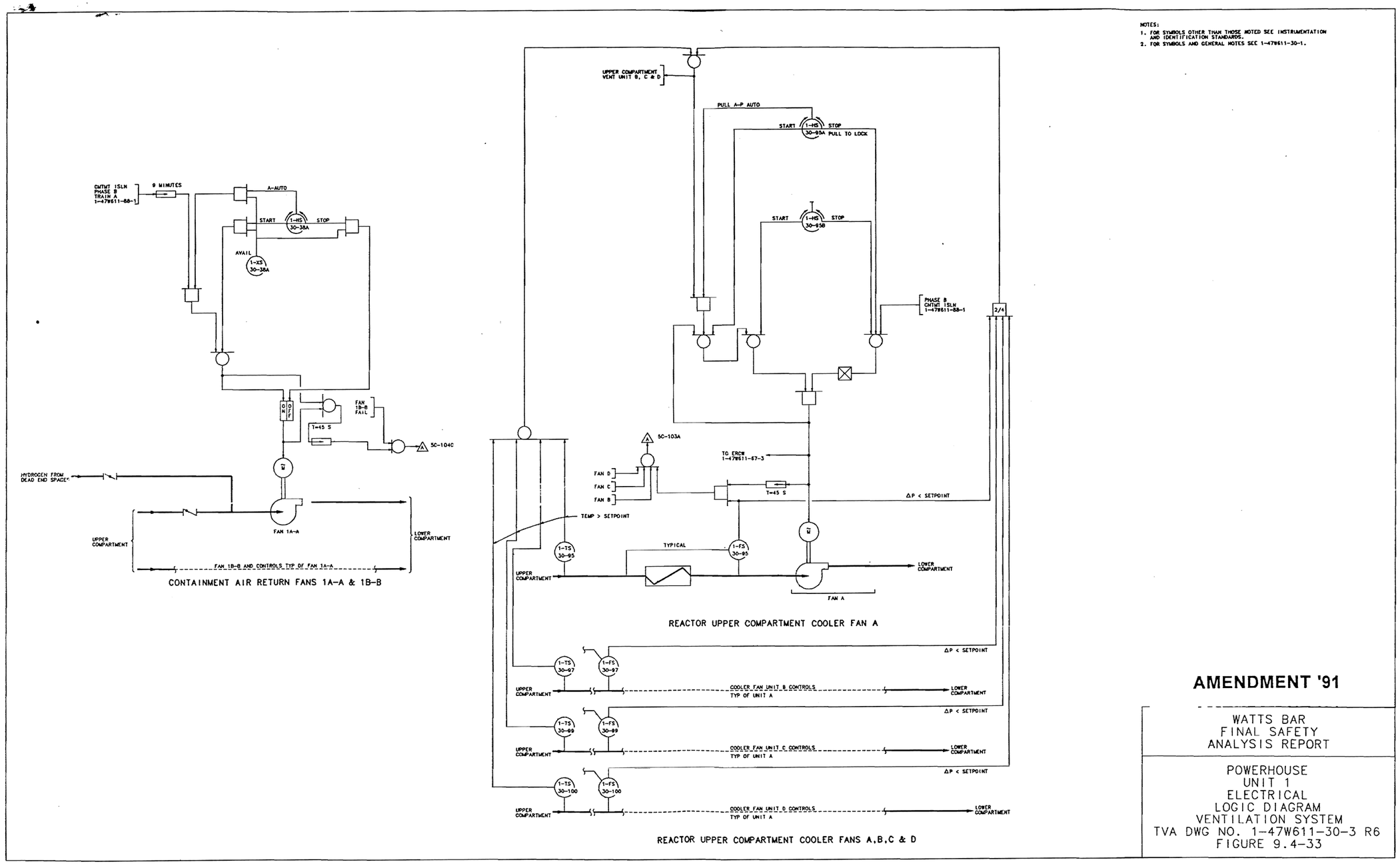


**Figure 9.4-33 Powerhouse Unit 1 Electrical Logic Diagram for Ventilation System**

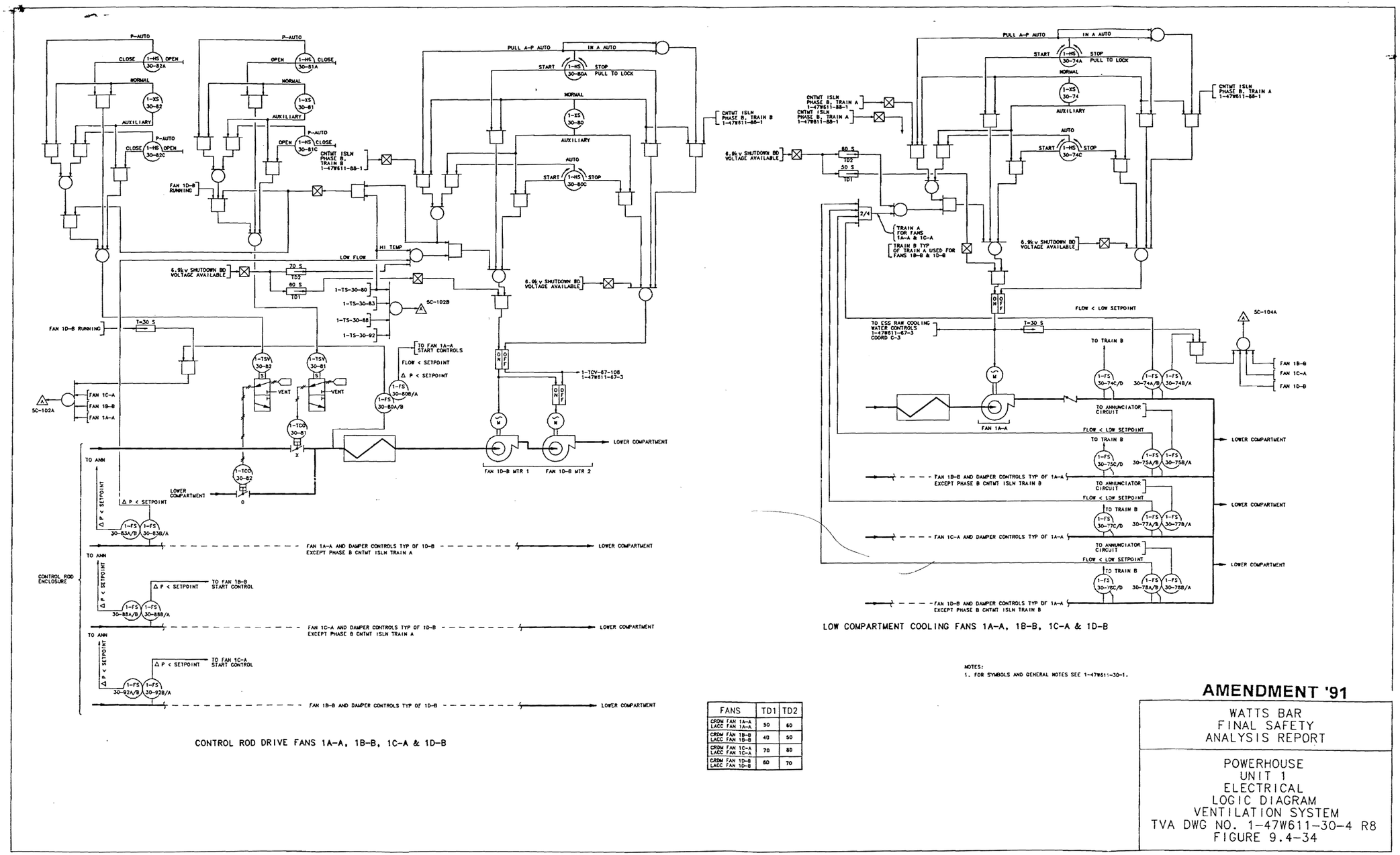


| FANS | TD1 | TD2 |
|---|---|---|
| CRDM FAN 1A-A<br>LACC FAN 1A-A | 50 | 60 |
| CRDM FAN 1B-B<br>LACC FAN 1B-B | 40 | 50 |
| CRDM FAN 1C-A<br>LACC FAN 1C-A | 70 | 80 |
| CRDM FAN 1D-B<br>LACC FAN 1D-B | 60 | 70 |

**Figure 9.4-34 Powerhouse Unit 1 Electrical Logic Diagram for Ventilation System**

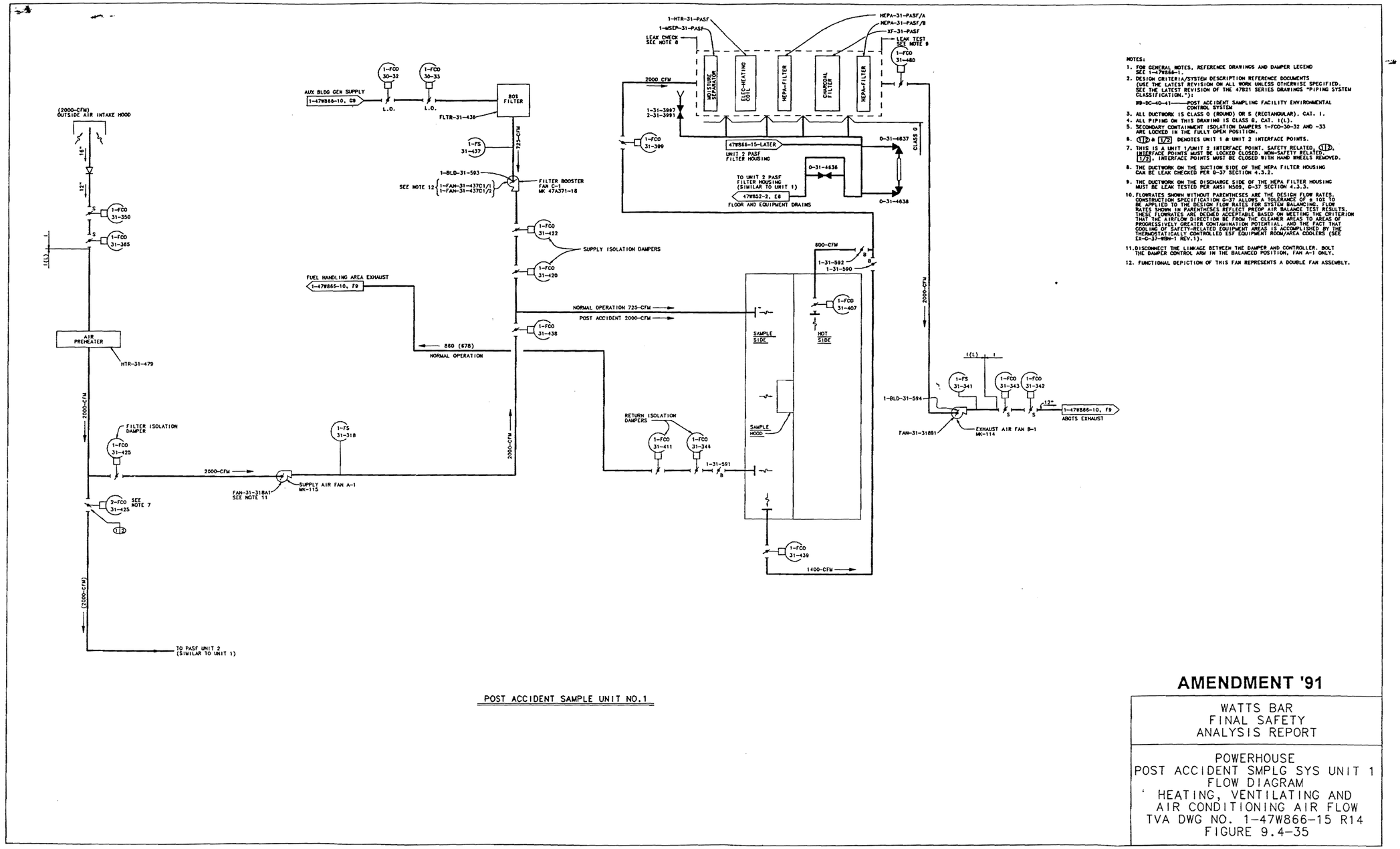


**Figure 9.4-35 Powerhouse Post-Accident Sampling System Unit 1 Flow Diagram for Heating, Ventilating and Air Conditioning Air Flow**

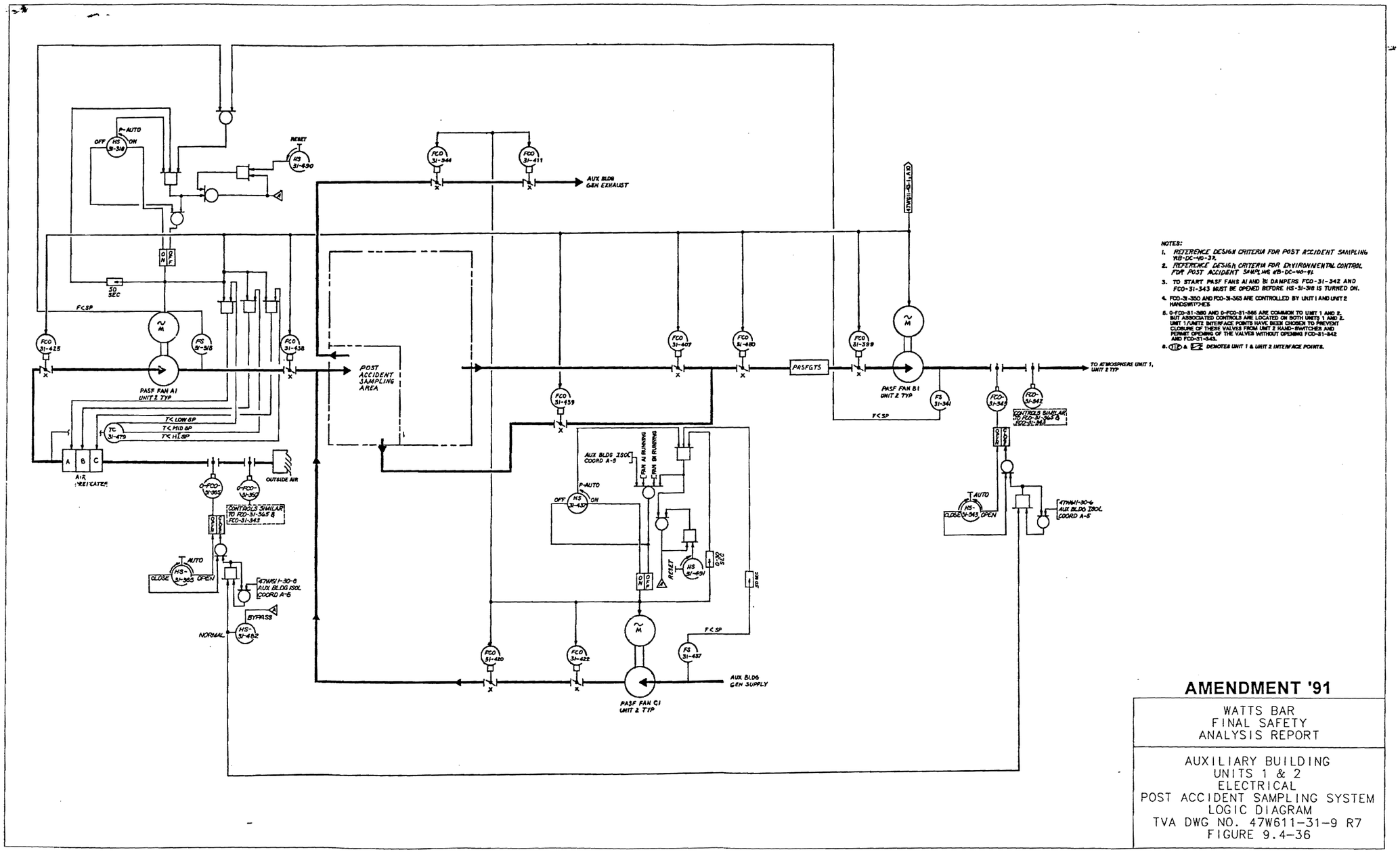


Figure 9.4-36 Auxiliary Building Units 1 & 2 Electrical Post-Accident Sampling System Logic Diagram

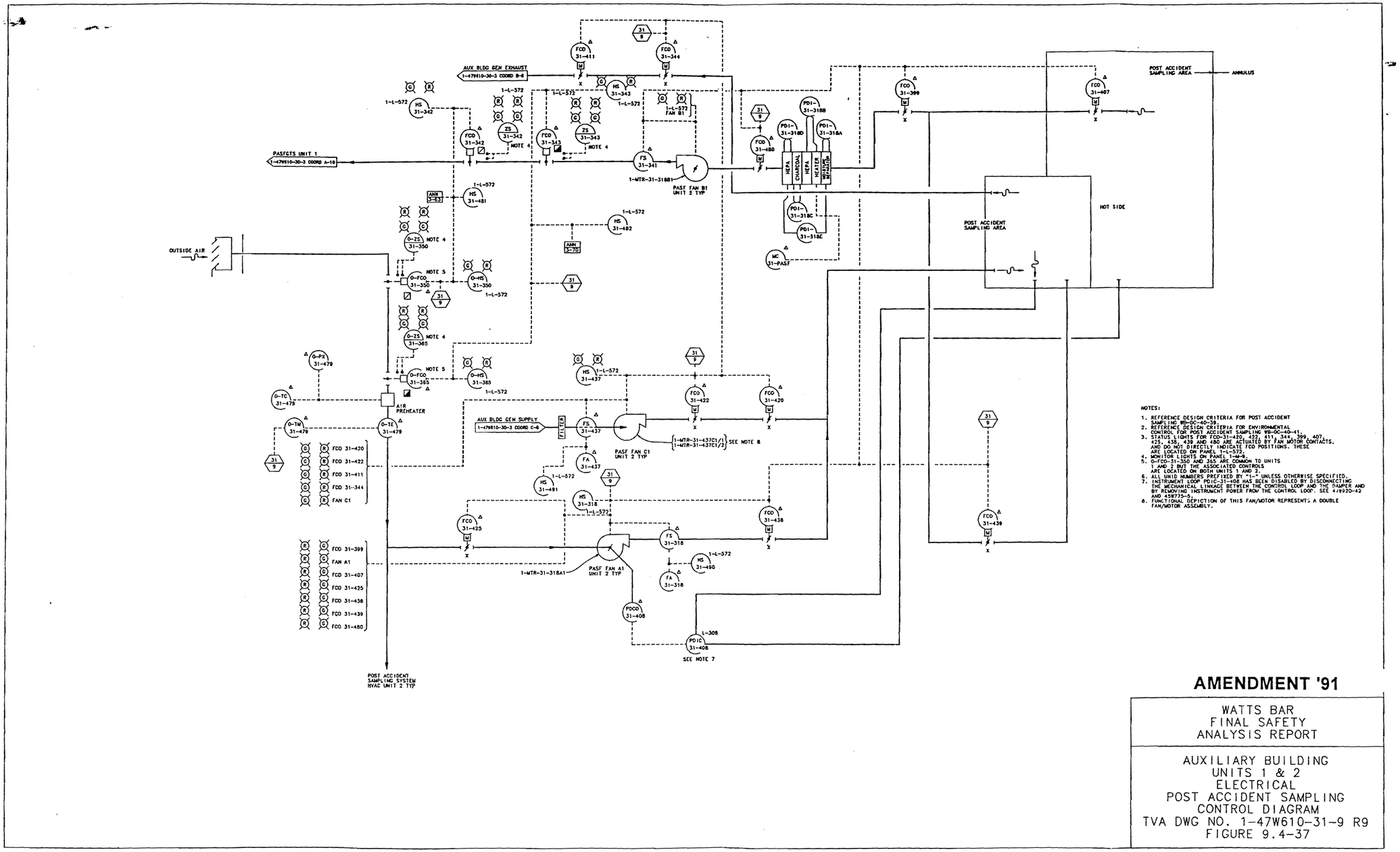


NOTES:

1. REFERENCE DESIGN CRITERIA FOR POST ACCIDENT SAMPLING WB-DC-40-39.
2. REFERENCE DESIGN CRITERIA FOR ENVIRONMENTAL CONTROL FOR POST ACCIDENT SAMPLING WB-DC-40-41.
3. STATUS LIGHTS FOR FCO-31-420, 422, 411, 344, 399, 407, 425, 438, 439 AND 480 ARE ACTUATED BY FAN MOTOR CONTACTS, AND DO NOT DIRECTLY INDICATE FCO POSITIONS. THESE ARE LOCATED ON PANEL 1-L-572.
4. MONITOR LIGHTS ON PANEL 1-M-6.
5. O-FCO-31-350 AND 365 ARE COMMON TO UNITS 1 AND 2 BUT THE ASSOCIATED CONTROLS ARE LOCATED ON BOTH UNITS 1 AND 2.
6. ALL UNID NUMBERS PREFIXED BY "1-" UNLESS OTHERWISE SPECIFIED.
7. INSTRUMENT LOOP PDIC-31-408 HAS BEEN DISABLED BY DISCONNECTING THE MECHANICAL LINKAGE BETWEEN THE CONTROL LOOP AND THE DAMPER AND BY REMOVING INSTRUMENT POWER FROM THE CONTROL LOOP. SEE 47W920-42 AND 45W775-5.
8. FUNCTIONAL DEPICTION OF THIS FAN/MOTOR REPRESENTS A DOUBLE FAN/MOTOR ASSEMBLY.

**AMENDMENT '91**

WATTS BAR
FINAL SAFETY
ANALYSIS REPORT

AUXILIARY BUILDING
UNITS 1 & 2
ELECTRICAL
POST ACCIDENT SAMPLING
CONTROL DIAGRAM
TVA DWG NO. 1-47W610-31-9 R9
FIGURE 9.4-37

PROCADAM MAINTAINED DRAWING
THIS CONFIGURATION CONTROL DRAWING IS MAINTAINED BY THE WBN CAD UNIT AND IS NOW PART OF THE TVA PROCADAM DATABASE

**Figure 9.4-37 Auxiliary Building Units 1 & 2 Electrical Post-Accident Sampling Control Diagram**

THIS PAGE INTENTIONALLY BLANK

# 9.5 OTHER AUXILIARY SYSTEMS

## 9.5.1 Fire Protection System

The WBN Fire Protection Program is described in the WBN Fire Protection Report.[2][3][4][5] For interface with a auxiliary feedwater system, see Section 10.4.9.

### 9.5.1.1 Deleted by Amendment 87

### 9.5.1.2 Deleted by Amendment 87

### 9.5.1.3 Deleted by Amendment 87

### 9.5.1.4 Deleted by Amendment 87

### 9.5.1.5 Deleted by Amendment 87

## 9.5.2 Plant Communications System

### 9.5.2.1 Design Bases

**Interplant and/or Offsite Systems**

The design basis for interplant and/or offsite communications is to provide dependable systems to ensure reliable service during normal plant operation and emergency conditions.

The primary interplant offsite communications systems are microwave radio, fiber optics circuits, telephone systems and radio systems.See Section 9.5.2.3 for a general description of each system.

**Intraplant Communications**

The design basis for the intraplant communications is to provide sufficient equipment of various types such that the plant has adequate communications to start up, continue safe operation, or shutdown safely.

The primary intraplant communications systems are the TSS telephone system, intercoms, sound powered telephones, two-way VHF cellular radios, VHF radio paging, codes (code call is not used), alarms (accountability/evacuation and fire/medical), and paging.

See Section 9.5.2.2 for a general description of each system.

### 9.5.2.2 General Description Intraplant Communications

The plant communications systems are installed and maintained by TVA with the exception of the cellular radio system which is maintained by the cell radio provider. The following paragraphs describe the basic functions of the intraplant communications systems.

### Telephone System

Telephone Switching System (TSS) - A TSS is installed to provide primary 2-way voice communications and data transmission throughout the Watts Bar Nuclear Plant as well as access to offsite circuits.

The Node 1 and Node 2 TSSs are powered from separate 48V dc systems. Each 48V system consists of battery chargers, a regulating power board, and a 48V battery. Each battery charger is capable of assuming the total load for its respective Node. The selected charger provides 48V dc to its TSS with the battery available as needed. Each battery is sized to carry the load at full capacity for 3 hours without the chargers. The Node 1 chargers are powered by dual ac voltage sources supplied from Train A and Train B diesel-backed boards. The Node 2 chargers are powered by dual ac voltage sources. The main source is the construction sub-station and the other is from the telephone diesel generator unit.

### Sound-Powered Telephone Systems

Plant Operation Systems - The primary purpose of these systems is to provide communications for maintenance and operations personnel. There are 7 separate systems provided for each unit.

Backup Control Center System - The primary purpose of this sound powered system is to provide alternative communications between the auxiliary control room and other stations which must be manned to shutdown the reactor if the MCR is abandoned. This system consists of two completely redundant subsystems. Each subsystem is wired directly and independently of all other communications systems. Wiring routes avoid the spreading room, unit control rooms, and auxiliary instrument rooms. Sound-powered equipment and circuits are provided in the Diesel Generator Buildings, the 480V ac shutdown board rooms, the 6.9 kV ac shutdown board rooms, and the auxiliary control room.

Health Physics System - The primary purpose of this sound powered telephone system is to provide an alternate communications link between the health physics office and the MCR. A direct dedicated circuit is provided between the health physics office and the Unit control room (physically on the electrical control area desk).

Diesel Building to Main Control Room - The primary purpose of this sound powered telephone system is to provide an alternate communications link between the Diesel Generator Building and main control room. A direct dedicated circuit is provided between the shielded waiting room in the Diesel Generator Building and the MCR at the diesel generator control panel.

### Closed-Circuit Television

Portable closed circuit television systems are provided, when necessary, for remotely viewing radwaste packaging operation, refueling operations, area and equipment surveillance, and maintenance activities.

### Codes, Alarms, and Paging System

The codes, alarms, and paging (CAP) system is one system that combines assembly and accountability alarm, fire and medical emergency alarm, and paging. Control logic, tone generation, and power and signal distribution equipment is located in the communications room with speakers with solid-state amplifier as end devices located throughout the plant.

All alarms are controlled from the MCR. The assembly/accountability and paging alarms are also controllable from the auxiliary control room.

Paging may be accessed from selected TSS telephones. Paging may also be accessed by paging handsets in the main and auxiliary control room.

The CAP system operational priority sequence is fixed by relay logic as follows:

*(1)* Site Assembly alarm

*(2)* Fire and medical emergency alarm

*(3)* Paging

Paging can be advanced to a higher priority in emergencies by using the evacuation alarm control unit cancel push button.

Design consideration has been given to increase system reliability with the following features provided:

*(1)* Redundant operating centers.

*(2)* Three separate tone generator units.

*(3)* Two physically separate power distribution networks with approximately half of the amplifier-speaker units in each area of the plant fed from each fuse panel via alarm-type fuses.

*(4)* Redundant chargers are used and can be switched into service as required.

*(5)* DC supervision of each individual audio pair.

*(6)* Isolation of evacuation alarm actuating devices.

(7) Electrical separation of amplified-speakers in each area into two circuits such that adequate coverage can be maintained in the event of one circuit failure.

**Radio System**

Onsite Radio Paging System - The primary purpose of this system is to provide onsite paging of key plant personnel. This system is accessible from the TSS telephone system.

Inplant VHF Radio System - The primary purpose of this system is to provide voice communications throughout the plant for plant operations and maintenance personnel. This system consists of several repeaters, numerous remote control units, and portable VHF radios. One or more repeaters may be used by the fire brigade for communications during a fire emergency. Nuclear Security personnel also have access to these repeaters as an alternative to the Nuclear Security Radio System.

Inplant Cellular Radio System - The primary purpose of this system is to provide voice communications throughout the plant and owner controlled property for use by operations and maintenance personnel. The system consists of a cell site, remote interface unit (to interface with the inplant distributed antenna system), and cell radio/phones. Nuclear Security and Fire Operations also have access to this system.

### 9.5.2.3 General Description Interplant System

**Microwave Radio**

Microwave circuit provides access to the power system control center (PSCC).

Redundant 24V dc-dc converters supplied from the 48V dc telephone power system are installed for the exclusive use of this microwave circuit.

**Fiber Optic Circuit**

The fiber optic circuit provides high speed digital communication connecting major communication centers and administrative offices through TVA. This fiber optic circuit is integrated into the 161kV insulated shield wire. Electro-optical interface and channel equipment are located in Telecommunications Node 2 Building.

**Telephone System**

Commercial Telephone Service - Public telephone service is provided to all TSS telephones with proper class of service, to pay telephones, and to dedicated data circuits.

Emergency Notification System (ENS) - The primary purpose of this telephone circuit is to provide a direct circuit from Watts Bar Nuclear Plant to the NRC in the event of a serious emergency as well as ongoing information on plant system, status and parameters at the nuclear plant reactor. A dedicated telephone line that is independent of the public telephone switching network is provided for the NRC.

Health Physics Network (HPN) - The primary function of this telephone circuit is to report directly to the NRC on radiological and meteorological conditions as well as assessment of trends and the need for protective measures on-site and off-site. A dedicated telephone line that is independent of public telephone switching network is provided for the NRC.

Transmission & Power Supply - The primary purpose of this system is to provide communications for Transmission & Power Supply engineers, but it may also be used by plant operations personnel during emergencies. This system is capable of contacting local mobile units and other TVA power generating facilities.

Nuclear Security Radio - The primary purpose of this system is to provide effective communications between all Nuclear Security officers.

Emergency Radio Communication System - This system is integrated with inplant repeater system for coordination with field monitoring teams and other personnel.

Sheriffs' Radio - The primary purpose of this system is to provide communications between Nuclear Security officers and the Meigs and Rhea County sheriffs.

### 9.5.2.4 Evaluation

The following evaluation is intended to establish adequacy and redundancy of the plant communications systems design.

Interplant Systems

There are four basic types of plant-to-offsite communications: microwave radio, fiber optics circuits, radio, and telephone systems. The availability of these systems during or after an emergency is enhanced by the fact that each enters the plant via different means.

The redundancy of the communications systems is of further significance. The microwave and fiber optics equipment design employs redundancy both in the channelizing and in the RF circuitry. The microwave system is powered from a battery-battery charger system through parallel-connected, redundant dc-dc converters. Each charger is fed from two separate ac sources, and each battery is capable of operating its system for a minimum of three hours without chargers.

The major electronic portions of the microwave are housed in the communications room which is located in the Control Building (Node 1). This building is a Seismic Category I structure.

The commercial telephone lines are terminated in Bell Hut and extend to Node 1 and 2 and from there to instruments located throughout the plant via the TSS. Local central office lines are available in the control room in the event of the loss of the TSS.

The Transmission & Power Supply radio have no components in the communications room and, therefore, would not be affected by the total destruction of this room. The Nuclear Security and Sheriffs RCUs in the Secondary Alarm Station (SAS) would be

affected by the total destruction of the communication room and would be inoperable. Hand held radios would still be available to communicate from the SAS. The emergency radio communications system, however, depends on equipment in the communications room and would be inoperative.

All of the VHF radio systems are powered by battery- and/or diesel-backed ac sources and would remain operative following loss of offsite power.

Refer to Figure 9.5-19 for availability of interplant communications during various postulated conditions.

Intraplant System

The automatic telephone equipment is one of the primary systems is designed so that failures in individual switches or lines do not interrupt service. However, such failures are annunciated and repairs are made promptly. The main (Node 1) switching equipment for this system is located in the communications room which is in a Seismic Category I building. Communication between TSS phones within seismic Category I buildings is through Node 1. In times of emergency, the TSS can be programmed to limit access only to key people to ensure that they will always have telephone service.

The codes, alarms (assembly/accountability) and paging system is designed for survivability with the following features:

*(1)* Duplicate operating locations: one in the main control room and the other in the auxiliary control room. Isolation of the duplicate controls is provided in the communications room.

*(2)* Three tone generator consoles powered from two separate sources:

*(a)* The operating console is normally aligned to the A source.

*(b)* A standby console which automatically is inserted upon power failure of the operating console. The standby console is normally aligned to the B source. It may also be manually switched at any time.

*(c)* A third console which may be manually substituted for either of the other consoles.

*(3)* Plug-in features:

*(a)* The tone generators are solid-state plug-in devices.

*(b)* The amplifier in the speaker unit is solid-state, easily unplugged and replaced.

*(4)* The power-leads to each speaker-amplifier are fused and annunciated.

(5) The signal-leads to each speaker-amplifier are supervised with dc while idle. Any occurrence which causes a short of the signal-leads will cause the fuse to blow and annunciate. The rest of the units will function normally with single or multiple open-circuited signal-leads to individual speaker-amplifiers.

(6) There are two sources of 24V dc power distributed to the speaker- amplifiers and approximately half in each area of the plant are supplied from each source. Each source is quite reliable since it is supplied from chargers which are backed up by batteries capable of supplying the load for three hours.

The failure of the TSS equipment will not impair the use of the paging equipment from the local stations located at the unit operator's desk or the auxiliary control room.

The sound-powered telephone systems are completely independent of power, each other, and all other systems provided. As long as a complete metallic path exists between instruments, communications can be maintained since the instruments supplied with these systems are very rugged and will successfully withstand high shocks, negligence, and abuse. If permanently installed wires are rendered unusable for any reason, a temporary pair of wires can be used with the sound-powered instruments.

Neither the Inplant VHF Radio System nor the Inplant Cellular Radio System have any components in the communications room and, therefore, would not be affected by the total destruction of this room. The Onsite Radio Paging System, however, depends on equipment located in the communications room and would be inoperative.

The Inplant VHF Radio System, the Cellular Radio System, and the Onsite Radio Paging System are powered by battery- and/or diesel-backed ac sources and would remain operative following loss of offsite power.

Refer to Figure 9.5-19 for availability of intraplant communications during various postulated conditions.

### 9.5.2.5 Inspection and Tests

The two communication systems are covered by Special Performance Tests

(SPT-251-02 and SPT-252-02):

(1) The sound-powered telephone systems provided for the backup control center, health physics office, and Diesel Building shielded room;

(2) The codes, alarms, and paging system.

All systems are carefully installed and checked for proper operation initially by construction forces. Routine maintenance is performed by operating personnel on a regular basis and includes such items as checking for proper switch operation, checking for proper operating levels, visual inspection, etc.

The most comprehensive testing, however, results from the heavy daily usage of the equipment and the subsequent reports of any of the users. Individual power failures in the equipment are annunciated.

## 9.5.3 Lighting Systems

### 9.5.3.1 Design Bases

There are three basic lighting systems in the plant designated as follows: normal, standby, and emergency. These systems are designed in accordance with TVA design guides and standards which use the recommendations of the Illuminating Engineering Society of North America as their basis, and good engineering practice to provide the required illumination necessary for safe conduct of plant operations and under normal conditions to make the plant personnel as comfortable as possible.

The normal lighting system is designed to economically provide the amount and quality of illumination to meet normal plant operations and maintenance requirements.

The standby lighting system upon loss of the normal lighting system, provides adequate illumination for the safe shutdown of the reactor and the evacuation of personnel from vital areas of the plant if the need should occur. It forms an integral part of the normal lighting requirements but is fed from an entirely independent source.

The emergency lighting system is composed of two separate systems: (1) The 125V dc lighting system, which is designed to provide immediately the minimum illumination level in areas vital to the safe shutdown of the reactor for the period required for diesel loading or upon loss of ac auxiliary power for the duration of capacity of the 125V vital dc batteries and (2) an individual eight-hour battery pack network, which is used to supplement the 125V dc emergency lighting to provide emergency lighting in areas that must be manned for safe shutdown; and for access and egress to and from fire areas, which meet the requirements of 10CFR50, Appendix R, III.J. Other battery pack units are provided for building egress for personnel safety purposes.

### 9.5.3.2 Description of the Plant Lighting System

All plant lighting systems have the following features in common: adequate capacity and rating for the operation of the loads connected to the systems, independent wiring and power supply, overcurrent protection for conductor and equipment using nonadjustable inverse time circuit breakers, copper conductor with 600-volt insulation run in metal raceways.

The insulated cable used inside the primary containment areas is resistant to nuclear radiation and chemical environmental conditions in this area.

The plant lighting system consists of three basic schemes, the first of which is the normal lighting. This system is for general lighting of the plant: the major power supply is through two alternate feeders from the 6.9kV common boards A and B to selective and interrupter switch and 3-phase 6900-120/208-volt ac transformers, feeding a lighting board. These lighting boards are located in the Turbine and Auxiliary Buildings of the main plant. Other lighting boards in the Service Building, Office Buildings,

gatehouse, etc., are fed from 480V boards through 3-phase 480-120/208V ac transformers. These lighting boards feed the normal lighting cabinets, designated by the prefix LC___, distributed throughout the main plant. In the MCR, alternate rows of fixtures or alternate fixtures are fed from different lighting boards to prevent total blackout in a particular area in case of failure of one of the other lighting boards or cabinets.

The second system is the standby lighting, which forms a part of the normal lighting requirements and is normally energized at all times. This system is fed from 480V Reactor MOV boards 1A2-A, 1B2-B, 2A2-A, and 2B2-B to 3-phase 480-120/208V ac transformers to each standby lighting cabinet, designated by the prefix LS___ . The Reactor MOV boards have a normal and alternate ac power supply and in event of their failure are fed from the standby diesel generators. The cable feeders to the standby cabinets located in the Seismic Category I structure are routed in redundant raceways and the fixtures are dispersed among the normal lighting fixtures.

The third lighting system is referred to as the emergency system. It consists of two systems as described in Section 9.5.3.1. The 125V dc emergency lighting system is electrically held in the off position until a power failure occurs on the associated standby lighting systems. Then the emergency lighting cabinets, designated by the prefix LD___, are automatically energized from the 125V dc vital battery boards. This system is an essential supporting auxiliary system for the ESF, and the cable feeders to the LD cabinets are routed on the redundant ESF cable tray system or in conduit. The fixtures are incandescent type and are dispersed among the normal and standby fixtures with alternate emergency fixtures being fed from redundant power trained LD cabinets.

The individual eight-hour battery pack emergency lighting system is automatically held in the de-energized state until loss of the normal ac supply. A charger monitors battery voltage and charges on fast rate when necessary. Solid-state circuits continually monitor both ac and dc current. The transfer switch circuit instantly connects lamps to battery on ac failure and disconnects them when normal power is restored. In some cases, the lamp heads are mounted remote from the units to obtain adequate light distribution.

### 9.5.3.3 Diesel Generator Building Lighting System

The Diesel Generator Building lighting cabinets are fed through 480-208/120V 3-phase local lighting transformers, which in turn are fed from the diesel 480V auxiliary boards respectively. Each of these auxiliary boards has dual feeders from the 480V shutdown boards during normal operation. In the event of an ac power failure to the 480V shutdown boards, the diesel should start within the prescribed time to provide the 480V ac power requirements for the safe shutdown of the plant through the standby feeders to the 480V shutdown boards, thus supplying power again to the Diesel Generator Building lighting transformers. Each diesel generator unit has a lighting cabinet which supplies the normal lighting for that unit. Low-level lighting required for maintenance or operating procedures and ingress/egress in the event of loss of normal lighting is supplied from fixtures with a self-contained battery and inverter charger and also individual eight-hour battery pack lighting units.

### 9.5.3.4 Safety Related Functions of the Lighting Systems

The lighting system is adequate for the operation and evacuation of the plant to the extent that the supports for the components of the system, that are located in areas of Seismic Category I structures containing safety-related equipment are qualified to prevent failure that could impair the functioning of any safety-related plant feature.

Lighting systems are classified as non-safety related. However, due to their functions, standby and emergency lighting systems shall be of a high reliability design so as to ensure necessary illumination in areas of the plant needed for operation of safe shutdown equipment and in access and egress routes thereto.

### 9.5.3.5 Inspection and Testing Requirements

Following the complete installation of a lighting system, it will be tested and inspected and short circuits, grounding of potential conductors, other faults, etc. will be eliminated and damaged or nonoperable fixtures replaced or repaired. The operation of the lighting system shall be observed during the initial and periodic testing of the normal and alternate feeder systems and during the 125V dc emergency power tests to the various boards from which these emergency lighting systems are fed. Maintenance and relamping of the normal and standby lighting systems shall be according to routine plant operating procedures.

The 125V dc emergency lighting system shall be tested periodically by tripping the holding coil circuit fed from the LS standby cabinet, thus closing the feeder circuit to the LD emergency cabinet. A written record of dates and results of these tests shall be maintained by plant personnel responsible for these tests.

The individual eight-hour battery pack lighting units will be tested periodically to ensure that the lamps are operational in according with routine plant procedures.

## 9.5.4 Diesel Generator Fuel Oil Storage and Transfer System

### 9.5.4.1 Design Basis

The diesel generator fuel oil system provides independent storage and transfer capacity to supply the four diesel generator units operating at continuous ratings with No. 2 Fuel Oil for a period of seven days without replacement.

The buildings are Seismic Category I structures and will withstand the affects of tornadoes, credible missiles, floods, rain, snow, or ice, as defined in Chapter 3, Section 3.3, 3.4, and 3.5.

The design code requirements for the system are as follows:

*(1)* Diesel Generator Building 7-day fuel oil storage tanks - Code for Unfired Pressure Vessels, ASME Section VIII. Division I.

*(2)* Piping from the 7-day fuel oil storage tanks to the interface with the skid-mounted diesel generator unit fuel oil piping - Boiler and Pressure Vessel Code, ASME Section III, Class 3 (Per NFPA Code 30-1973).

Skid mounted piping and components for the fuel oil system were designed, manufactured and installed in accordance with ANSI B31.1. This subsystem performs a primary safety function and is supported to Seismic Category I requirements. The scope of this work was done to meet 10CFR50, Appendix B quality assurance requirements. Future modifications performed on this subsystem piping are required to meet the intent of ASME Section III, Class 3.

*(3)* Remaining piping, valves, pumps, and associated equipment - Power Piping Code, ANSI B31.1-1973.

The 7-day diesel fuel oil storage tanks are designed for embedment within the Diesel Generator Building foundation. The fuel oil day tanks are skid-mounted on the diesel generator units.

The diesel fuel oil system for the diesel generator units meets the single failure criterion. That portion of the system from the 7-day storage tanks to the diesel generator units meets Seismic Category I requirements. The remainder of the system within the Diesel Generator Building meets Seismic Category I (L) requirements.

### 9.5.4.2 System Description

The flow diagram of the diesel generator fuel oil system is shown in Figure 9.5-20. The control and logic diagrams are shown in Figures 9.5-21 and 9.5-22, respectively.

The diesel generator fuel oil system consists of four 7-day embedded storage tank assemblies, one assembly for each diesel generator unit, with their associated day tanks, pumps, valves, and piping. The 7-day tanks are embedded in the Diesel Generator Building substructure and have a capacity of approximately 70,248 gallons of fuel for each diesel generator unit. The fuel day tanks (one per diesel engine) are mounted to the diesel engine skid and were supplied by the diesel generator vendor. These tanks have a capacity of approximately 550 gallons.

Level transmitters are provided on the 7-day storage tank assemblies to provide the following functions:

*(1)* Provide local fuel level indication.

*(2)* Annunciate an alarm in the MCR when the fuel level approaches a seven-day supply.

*(3)* Annunciate an alarm in the MCR on high level above the pump shut-off setting.

*(4)* Provide an interlock with the outside transfer pump at the yard storage tanks to shut off the pump automatically on high level of any of the four 7-day tanks which is being filled. Provide a high level interlock with the DG transfer pump in the DG Building when transferring fuel to fill any of the 7-day tanks from another 7-day tank within that building. Interlocks are not provided when using the DG transfer pump to transfer fuel to any other tanks.

A truck fill connection, condensate sump suction connection, and inspection dipstick gauge manholes are provided for each 7-day storage tank assembly. The vents to the atmosphere on all tank assemblies, with the exception of the skid-mounted day tanks, are provided with double fire screens to prevent an outside spark from entering the assemblies and igniting the gases within. The National Fire Code (NFC) does not require flame arrestors for Class 2 combustible liquid storage tank vents. Therefore, in order to facilitate the installation of missile protection devices, the skid mounted fuel oil day tank vent lines are not flame-proofed. However, the open vent lines are shielded from the atmosphere and equipped with bird screens. All tank connections and vents are above maximum flood elevation. That portion of the 7-day fuel oil tank vent above the roof level is encased in reinforced concrete for missile protection.

Two skid-mounted, electric motor driven, 15 gpm fuel oil transfer pumps, powered from the 480V diesel auxiliary boards (See Figure 8.3-32), are provided for each generating unit to transfer fuel from the 7-day storage tank assembly to the two skid-mounted day tanks of each generating unit. Each of these pumps supplies fuel to both day tanks.

Two sets of level switches are provided for each day tank and associated transfer pumps to maintain day tank level. An additional set of level switches provide both Main Control Room (MCR) and Auxiliary Control Room (ACR) alarms to indicate high and low fuel oil level in the day tanks.

From each day tank, fuel is supplied to the diesel injectors by a diesel engine driven pump. An electric motor-driven fuel pump is provided as a backup for the engine driven fuel pump. Separate suction and discharge lines serve each pump. Each pump has a suction strainer and dual element fuel filters are provided at each pump discharge. Additional filters at the inlet and outlet of each fuel injector protect the working parts of the injector. Pressure gauges are provided on both sides of the dual element fuel filters to provide a means of determining filter pressure drop. Pressure switches are provided between the fuel pumps and the dual element filters and between the final filters and the fuel injectors. The pressure switches provide ACR and MCR alarms on low pressure. Maintenance procedures call for periodic changing of filters and surveillance test runs verify the cleanliness of these filters.

Screens are provided in the suction lines of the Diesel Generator Building transfer pumps which transfer the fuel from the yard storage tank to the 7-day storage tanks. The 7-day tanks are sloped to collect water and sediment at the low end and can be "dip leg" pumped as necessary. The fuel storage and transfer system is protected against the entry of rain water, and the day tanks and 7-day tanks are not harmed by flood waters.

Each shipment of No. 2 diesel fuel oil can be sampled prior to pumping to the yard tanks. Samples collected may be used for analyses to verify site specific criteria prior to offloading the tanker and to ensure contractual requirements are met if necessary. Shipments of diesel fuel can be held in the yard tanks until the specified criteria are met and the fuel oil is transferred to one of the 7-day storage tanks or the fuel is burned in the auxiliary boilers. If necessary the fuel is discarded. Sampling and analyses of fuel

oil that is transferred to or stored in the 7-day storage tanks is completed in accordance with Technical Specifications.

The 7-day storage tanks are inspected in accordance with the Technical Specifications.

The methods for maintaining acceptable levels of fuel quality for the standby diesel generators at Watts Bar Nuclear Plant meet the guidelines set forth by NRC Regulatory Guide 1.137, Revision 1, except for pressure testing required by Section C1.e which was accepted by SER Supplement 5, Section 9.5.4.1 and exceptions to C2, given as follows:

*(a)* C2.a the reference year of ASTM D 975 used is 1990 or later revision instead of the year 1977 which is specified in the Regulatory Guide.

*(b)* C2.b methods for water and particle detection in fuel oil prior to transferring fuel oil to supply tank is specified in the Technical Specifications.

*(c)* C2.b analytical results to be completed after transfer of fuel to supply tanks are completed within time frames given in the Technical Specifications instead of the listed 2 weeks.

*(d)* C2.c fuel oil samples are collected using applicable ASTM method specified in the Technical Specifications instead of the listed ASTM D 270.

A transfer pump located adjacent to the yard fuel oil storage tanks provides the following functions:

*(1)* Transfer fuel oil from a tank truck to either of two yard fuel oil storage tanks.

*(2)* Transfer fuel oil from either yard fuel oil storage tank to the other.

*(3)* Transfer fuel oil from either yard fuel oil tank to any of the four 7-day fuel oil storage tank assemblies.

*(4)* Reject fuel oil from either yard fuel oil tank through a reject connection in the yard.

Seismically qualified fuel oil transfer pumps are also located in the Diesel Generator Building.

The Diesel Generator Building fuel oil transfer pump allows fuel oil to be transferred from any one of the 7-day fuel oil storage tanks in the Diesel Generator Building to any other 7-day fuel oil storage tanks in the Diesel Generator Building or either yard storage tank.

### 9.5.4.3 Safety Evaluation

With a 7-day supply of diesel fuel in each tank assembly, and each assembly embedded in the concrete substructure of a Seismic Category I building and separated by 18 inches of concrete, the diesel generator units are assured of a sufficient fuel supply for any of the conditions discussed in Section 9.5.4.1. The diesel generator fuel oil tank assemblies, piping, and pumps are so arranged that malfunction or failure of either an active or passive component associated with the source of supply for any one diesel generator unit does not impair the ability of the other sources to supply fuel oil to the other units. Each diesel generator is aligned so as to be able to supply power to its own auxiliaries so that a single failure can not result in loss of more than one diesel generator unit. The system thus meets the requirements of the single failure criterion.

Automatic carbon dioxide fire protection is provided in the Diesel Building fuel oil transfer pump room and the four rooms housing the diesel generator units.

A corrosion allowance is provided in the design wall thickness for the Diesel Generator Building 7-day fuel oil storage tanks. The interiors of the tanks were coated for added corrosion protection. The fuel oil piping and fittings within the Diesel Generator Building have ample corrosion allowance, having been designed per the codes noted in Section 9.5.4.1, and will operate at a pressure considerably below the maximum allowable for the schedule of pipe and fittings used.

It is expected that additional fuel oil beyond that stored onsite can be procured and delivered to the plant site within a reasonable period of time since:

*(1)* The plant site is served by a railroad spur owned by TVA. The yard transfer pump is provided for transferring fuel oil from a tank car to either of the two fuel oil tanks in the yard, or directly to the diesel fuel oil storage tank assemblies.

*(2)* State Route 68 provides vehicle access to the site and intersects: State Route 58 and Interstate 75 (I-75) east of the site and State Route 29 (US 27) west of the site. State Routes 29 (US 27) and 58 pass within 10 miles of the site and I-75 within 30 miles of the site. These thoroughfares provide year round access (extreme weather conditions could interrupt traffic flow for short periods of time) to both Chattanooga and Knoxville. With access to both of these major cities it would be very unlikely that tanker truck deliveries would be interrupted for any significant period of time, even in periods of extreme weather conditions.

*(3)* If rail or road transportation is unavailable, barge or tanker delivery can be accepted at the dock area on the west bank of the Tennessee River near the plant site.

A failure modes and effects analysis for the diesel generator fuel oil storage and transfer subsystem is presented in Table 9.5-2.

### 9.5.4.4 Tests and Inspections

The engine-mounted, motor and engine-driven fuel oil transfer pumps and day tanks were functionally tested in the vendor's shop in accordance with the manufacturer's standards to verify the performance of the diesel generator units and accessories. The fuel oil transfer pumps in the yard and Diesel Generator Building were tested in the manufacturer's factory to verify their performance. The 7-day fuel oil storage tanks were tested with compressed air to 20 psig prior to shipment to the plant site.

The entire diesel fuel oil system is flushed with oil and is functionally tested at the plant site in accordance with Chapter 14.0. The diesel fuel oil system will be periodically tested to satisfy the Technical Specifications.

## 9.5.5 Diesel Generator Cooling Water System

### 9.5.5.1 Design Bases

A closed-loop circulating water cooling system is furnished for each engine of the four tandem diesel generator units housed within the Diesel Generator Building. The system maintains the temperature of the diesel engine within a safe operating range, under all load conditions, and maintains the coolant pre-heat during stand-by conditions. The heat sink for this system is the ERCW system which, flows through the tube side of the skid-mounted heat exchangers. See Section 9.2.1 for discussion of the ERCW system.

The diesel generator skid-mounted cooling water piping and components between the skid interface connection and the engine interface are vendor supplied, safety-related, ANSI B31.1, Seismic Category I with the exception of the cooling water heat exchangers which are ASME Section III, Class 3. All modifications to the skid-mounted diesel generator cooling water system piping are performed to meet the intent of ASME Section III, Class 3 (TVA Class C).

These buildings are designed to Seismic Category I requirements, and are designed to withstand the effects of tornadoes, credible missiles, hurricanes, floods, rain, snow, or ice as defined in Chapter 3 (Sections 3.3, 3.4, and 3.5).

### 9.5.5.2 System Description

Each cooling system includes a pump, heat exchanger expansion tank, and all accessories required for a cooling loop. (See Figure 9.5-23.)

To preclude long term corrosion or organic fouling the engine cooling water system requires de-ionized water with a corrosion inhibitor. The water chemistry is maintained in conformance with the engine manufacturer's recommendations, Electromotive Division of Generel Motors Corporation MI 1748. The closed-loop engine cooling water is circulated through the shell side of each skid-mounted heat exchanger by two diesel-engine shaft-driven pumps. Jacket water immersion heaters are provided for each engine to maintain the jacket water within the vendor recommended temperature range in order to reduce thermal stresses and assure the fast starting and load

accepting capability of the diesel generator units in performing their required safety function.

Temperature switches are used to control the immersion heater and to annunciate on high or low jacket water temperature. For temperature switch set points, see Figure 9.5-23.

Jacket water flows through the lubrication oil cooler by thermosyphon action when the diesel generators are idle. An electric motor driven lubrication oil circulation pump, powered from the 480V diesel auxiliary board, is also provided for each engine to circulate the lubrication oil through the lubrication oil cooler, which is warmed by the engine jacket water, and return the oil to the engine sump. The jacket water immersion heaters are controlled by thermostats, and the lubrication oil circulation pumps run continuously when the engine is not running. This recirculation ensures the lube-oil temperature is maintained at 85°F (minimum) during the standby mode. (See Figures 8.3-33, -33A, -33B, -33C, and -35.)

Each diesel generator unit is provided with two closed engine cooling water loops (one for each engine), for which the heat sink is provided by the ERCW system. (Refer to Section 9.2.1). The ERCW flows through the tube side of the skid-mounted heat exchangers.

### 9.5.5.3 Safety Evaluation

The cooling water is supplied to the heat exchangers of each diesel generator unit through redundant headers of the ERCW system. The system isolation valves are so arranged as to provide the capability to isolate either cooling source in the event of a component malfunction or excessive leakage from the system. Refer to Figures 9.2-1 and 9.2-4A. These valves are powered from the 480V diesel auxiliary board and closure signals for these valves are manually initiated (See Figures 8.3-33, -33A, -33B, -33C, and -35.) Therefore a malfunction (single failure of a component) or loss of one cooling water source can not jeopardize the function of a diesel generator unit. Both the non-skid-mounted air-start piping and fire protection piping located in the vicinity of the diesel generator cooling water system are designed to Seismic Category I(L) to ensure that no seismic event will degrade the functional capability of the diesel generator cooling water system. A failure modes and effects analysis for the diesel generator cooling water system is presented in Table 9.5-2.

### 9.5.5.4 Tests and Inspections

The ERCW system within the Diesel Generator Building is hydrostatically tested in accordance with the requirements of ASME Section III and is functionally tested in accordance with Chapter 14.0. System components are accessible for periodic inspections during operation.

The skid-mounted diesel generator cooling water system components are inspected and serviced as specified in the scheduled maintenance program for the Watts Bar Nuclear Plant diesel generator units.

## 9.5.6 Diesel Generator Starting System

### 9.5.6.1 Design Bases

Each diesel engine is equipped with an independent pneumatic starting system to provide reliable, automatic starting of the engines. See Figure 9.5-24. The diesel starting air system components are housed with their respective diesel generator units within the diesel generator rooms in the Diesel Generator Building.

The supply headers from each air compressor to the isolation check valve on its skid-mounted accumulator are designed to Seismic Category I(L) requirements. The supply headers from each loadless start device to the isolation check valve and the normally closed bypass valve at the skid-mounted accumulator are designed to Seismic Category I requirements.

The diesel generator skid-mounted starting air system piping and components are vendor supplied, safety-related, ANSI B31.1, Seismic Category I. All modifications to the skid-mounted starting air system piping are required to be performed to meet the intent of ASME Section III, Class 3 (TVA Class C).

### 9.5.6.2 System Description

Each diesel engine has two pairs of air starting motor units (hence, there are four pairs per diesel generator unit). A minimum of two pairs of air start motors are needed to start the diesel generator unit. A set of two skid-mounted air accumulators is provided for each diesel engine; four accumulators per diesel generator unit.

The accumulators are designed in accordance with the ASME Boiler and Pressure Vessel Code, Section VIII. Each set of accumulators is sized for a compressed air storage capacity sufficient to start the diesel generator unit five times without recharging. Each set of accumulators is equipped with pressure gauges, drains, shutoff valves, safety relief valves, check valves, instrumentation, and controls.

Two 480V ac motor-driven compressors supply compressed air to each of the two sets of accumulators for each diesel generator unit. Controls for the compressors have been designed for automatic start-stop operation. Manual test-start selector switches are also provided for each compressor. Pressure switches are provided on each air starting system for actuating low air pressure alarms both in the MCR and ACR (see Figure 9.5-25A, -25B, and -25C).

To prevent moisture and rust accumulation in the air starting system, a fully automatic heatless air dryer has been installed between the air compressor and the accumulators. The air dryer unit contains dual desiccant drying chambers which are alternately cycled through drying and regeneration cycles, a forced air after cooler, and associated cycle and fan controls. One chamber of the desiccant dryers is on stream at all times. Moisture traps are also located downstream of the dryers to collect any residual moisture. The two air storage systems for each diesel generator unit provide redundancy so that a single failure will not jeopardize the design starting capacity of the system.

### 9.5.6.3 Safety Evaluation

All equipment necessary to start the diesels upon receipt of a start signal is Seismic Category I.

The diesel air start system is classified as quality group D. Section B of Regulatory Guide 1.26 discusses quality groups A through D and generally the types of equipment falling in each group. Section B also discusses systems and components not covered by groups A-D. Examples of these non-covered items are provided in Regulatory Guide 1.26 and include instrument and service air systems, auxiliary support systems and diesel engines. Part NA-1130, Section III of the ASME code states that drive system and other accessories are not part of the code. Regulatory Guide 1.26 states that non-covered items should be designed, fabricated, erected, and tested to quality standards commensurate with the safety functions performed. As a quality group D system, it is considered to meet quality standards commensurate with the safety function performed.

The piping for the air start system is designed to minimize rust accumulation in the system. Moisture is accumulated at the low points in the system and removed by administrative blowdown procedures. ASME Section III, Class 3 soft-seated check valves are provided downstream of the air accumulators. A strainer is also provided in the air start piping system upstream of the air start motors which prevents carry over of oil or rust, etc., to the motors. An oil mist type lubricator located in the air start system piping downstream of the line strainer and before the air start motors, provides lubrication for the motors. The typical arrangement for each engine is a strainer and lubricator for each pair of air start motors. The diesel starting air system is shown in Figures 9.5-25A, 25B, and 25C. A failure modes and effects analysis for the diesel generator starting air system is presented in Table 9.5-2.

### 9.5.6.4 Tests and Inspections

The entire diesel generator starting system is functionally tested in accordance with Chapter 14.0. The system is periodically tested to verify its ability to function as part of the diesel generator unit to satisfy the Technical Specification requirements. Under normal standby conditions, the diesel generator starting system is maintained and inspected at intervals as prescribed in the plant maintenance instructions for the diesel generator units.

## 9.5.7 Diesel Engine Lubrication System

### 9.5.7.1 Design Bases

The diesel engine lubrication system for each diesel engine shown in Figure 9.5-26 (this figure depicts the diesel lube oil system for Diesel Generator 1A-A which is representative of the other three diesel generator sets), is a combination of four subsystems: the main lubricating subsystem, the piston cooling subsystem, and the scavenging oil subsystem and the motor-driven circulating pump, and soak back pump system.

The main lubricating subsystem supplies oil under pressure to the various moving parts of the diesel engine. The piston cooling subsystem supplies oil for piston cooling and lubrication of the piston pin bearing surfaces. The scavenging oil subsystem supplies the other systems with cooled and filtered oil. Oil is drawn from the engine sump by the scavenging pump through a strainer in the strainer housing located on the front side of the engine. From the strainer the oil is pumped through oil filters and a cooler. The filters are located on the accessory racks of the engines. The oil is cooled in the lubricating oil cooler (as shown in Figure 9.5-27) by the closed circuit cooling water system in order to maintain proper oil temperature during engine operation. During standby, the lube-oil temperature is maintained at 85°F or greater by the closed cooling-water system.

The required quality of oil is maintained by scheduled maintenance of strainers, separators, and filters and by oil changes in accordance with the engine manufacturer's owner's group recommendation.

A crankcase pressure detector assembly is provided to cause the engine to shut down in case the normal negative crankcase pressure changes to a positive pressure. This is accomplished by relieving the oil pressure to the engine governor. The crankcase pressure detector shutdown device is operative only during diesel generator testing; see Section 8.3.1.1 under the heading, "Standby Diesel Generator Operation."

An overspeed mechanism is provided to shut down the engine by stopping the injection of fuel into the cylinders should the engine speed become excessive.

The piping and components for the skid-mounted diesel engine lubrication system are vendor supplied, safety-related, ANSI B31.1, Seismic Category I. All modifications to the skid-mounted diesel engine lubrication system are performed to meet the intent of ASME Section III, Class 3 (TVA Class C).

### 9.5.7.2 System Description

The system is a combination of four separate systems. The four systems are the main lube oil system, piston cooling system, scavenging oil system, and the motor-driven circulating pump and soak-back pump system. Each system has its own pump. The main lube oil pump and piston cooling oil pump, although individual pumps, are both contained in one housing and are driven from a common shaft and are the helical gear type. The main lubricating, piston cooling, and scavenging oil pumps are driven from the accessory gear train at the front of the engine. The auxiliary system has a circulating oil pump and a soak-back oil pump driven from electric motors mounted on the side of engine base. All pumps are mounted on the engines, skid, or Diesel Generator Building floor.

The main lube oil system supplies oil under pressure to the majority of the engine moving parts. The piston cooling system supplies oil for piston cooling lubrication of the piston pin bearing. The scavenging oil system supplies the other systems with cooled, filtered oil.

In the operation of these systems, oil is drawn from the engine sump by the scavenging oil pump through a strainer in the strainer housing. From the strainer, the oil is pumped through the oil filter and the lube oil cooler. The cooler absorbs heat from the jacket water to maintain proper operating temperature during standby operation. The oil then flows to the strainer housing to supply the main lubricating and piston cooling pumps. After being pumped through the engine, the oil returns to the engine sump to be recirculated.

To enhance the reliability of and to minimize wear due to automatic fast starting, each DG has an auxiliary lube oil system driven by two electric motors. The motors drive two pumps, each of which has a separate function. A soak-back pump draws oil from the engine sump and pumps it through the accessory rack-mounted auxiliary turbocharger lube oil filter and through the head of the engine-mounted turbocharger oil filter into the turbocharger bearing area. The auxiliary turbocharger oil filter purifies the oil supplied to the turbocharger. A relief valve allows oil to be bypassed to the circulating pump system when the outlet pressure exceeds 75 psig.

The soak-back system has a two-fold job. It prelubes the turbocharger bearing area so that the bearing will be fully lubricated when the engine receives a start signal requiring rated speed and application of rated load within a matter of seconds. It also removes residual heat from the turbocharger bearing area upon engine shutdown.

The lube oil circulating pump draws oil from the engine sump and pumps it through a check valve, in-line wye strainer, main lube oil filter, lube oil cooler, and returns it to the engine sump through the strainer housing.

This system also serves to continuously prelube the lower portion of the engine. The main engine oil galley stays full and the camshaft area is supplied through a separate exterior line. The pump operates continuously.

The water jacket immersion heater heats the engine cooling water which circulates through the lube oil cooler. As the oil is circulated through the cooler (operating as a heater) it is warmed.

A backup DC lube oil pump provides lube oil to the turbocharger in case the AC pump fails.

Low lube oil pressure alarms are located in the MCR and in the ACR. Lube oil low alarm pressure varies with engine operating conditions. At rated speed, the engine shuts down if lube oil pressure drops below setpoint during non-accident conditions. There are no other interlocks on this system.

### 9.5.7.3 Safety Evaluation

Each engine crankcase sump contains a sufficient volume of lubricating oil, ample for at least 7 days of diesel generator unit full' load operation without requiring replenishment. The established oil consumption rate is 0.83 gallons per hour. An additional standby oil reserve is stored within the plant's power stores to replenish the engines for longer periods of operation and to "top off" the engines after their periodic

test operations as specified in the Technical Specifications. A failure modes and effects analysis for the diesel generator lube oil system is presented in Table 9.5-2.

#### 9.5.7.4 Test and Inspections

As identified in Chapter 14.0, pre-operational testing for Watts Bar Unit 1 included functional testing of the diesel generator lubricating oil system. Any additional required testing of the diesel generator lubricating oil system for Watts Bar Unit 2 pre-operational testing is also identified in Chapter 14.0. The diesel generator lubricating oil system components are inspected and serviced as specified in the scheduled maintenance program for the Watts Bar diesel generator units. The inspection and service of the lubricating oil systems include visual checking for, and the correction of, oil leakage. This program sets overall standards and testing instructions to qualify the lubricating oil for use in the diesel generator engines.

### 9.5.8 Diesel Generator Combustion Air Intake and Exhaust System

#### 9.5.8.1 Design Bases

Each diesel engine associated with each of the tandem diesel generator units is equipped with an independent combustion air intake and exhaust subsystem. The four subsystems for the plant are housed in physically separated rooms within the Diesel Generator Building. Each of the four diesel generator subsystems has a dedicated air intake and exhaust system.The Diesel Generator Building is designed to Seismic Category I requirements, and is designed to withstand the effects of tornadoes, credible missiles, hurricanes, floods, rain, snow, and ice as defined in Sections 3.3, 3.4, and 3.5. The combustion air intake and exhaust piping, filters, and silencers are so arranged in the individual rooms for each diesel generator unit that a malfunction or failure of any system component associated with any single unit will not impair the operation of the remaining three units. The air intake and exhaust systems thus meet the requirements of the single failure criterion. The piping and components for the diesel generator combustion air intake and exhaust systems are designed in accordance with ANSI B31.1, Seismic Category I.

#### 9.5.8.2 System Descriptions

The general arrangement of the diesel generator combustion air intake and exhaust systems is shown in Figure 8.3-1. The flow diagrams are shown in Figures 9.5-29 and 9.5-30. Each diesel generator combustion intake and exhaust subsystem includes but not limited to an air intake filter, air intake silencers, and piping of the air intake subsystem from the air intake to its connection to the engine; and an exhaust silencer and piping of the exhaust subsystem from its connection to the engine to a point just above the Diesel Generator Building roof level where the exhaust exits to the atmosphere. As shown in Figure 8.3-1, the major components of the diesel generator combustion air and exhaust systems are housed within the Diesel Generator Building which provides protection from missiles, snow, and ice. That portion of the exhaust subsystems exposed above the roof level is short and below the parapet level to reduce the vulnerability to tornado missiles. Drain holes are provided at appropriate points to expel any rainfall that enters the exhaust piping.

### 9.5.8.3 Safety Evaluation

The diesel generator combustion air intake and exhaust systems are designed to function before, during, and after a SSE, to ensure that a seismic event will not degrade the combustion air intake and exhaust systems to the point that the function of a diesel generator unit is jeopardized.

An analysis of diesel generator exhaust recirculation utilizing a model developed by Halitsky[1] for transverse jet plumes, established that the exhaust plume will be carried well above the level of the air intakes and thus will not degrade the intake air. The diesel generator units can withstand a concentration of 20% carbon dioxide (by volume) in the intake air stream and continue to function at rated, full-load power. The redundancy and separation of the four intake and exhaust subsystems are discussed in Section 9.5.8.1. The protection against missiles, snow, rainfall, and ice are discussed in Section 9.5.8.2.

A failure modes and effects analysis for the Diesel Generator Building ventilation intake and exhaust subsystems is presented in Table 9.4-4. A failure modes and effects analysis for the diesel generator combustion air intake and exhaust systems is presented in Table 9.5-2.

### 9.5.8.4 Tests and Inspection

As identified in Chapter 14.0, pre-operational testing for Watts Bar Unit 1 included functional testing of the entire installed diesel generator combustion air intake and exhaust system. Any additional required testing of that system for Watts Bar Unit 2 pre-operational testing is also identified in Chapter 14.0.

Each diesel generator combustion air intake and exhaust subsystem is periodically tested to verify its ability to function as part of the diesel generator unit testing in accordance with Technical Specifications.

Under normal standby conditions, the diesel generator combustion air intake subsystem is inspected at intervals as prescribed in the plant maintenance instructions for the diesel generator units. These inspections include the air intake filter oil level, oil viscosity, and sludge accumulation.

The diesel generator combustion air exhaust silencer has a continuous drain to remove any water which may accumulate due to condensation or rain.

**REFERENCE**

*(1)* James Halitzky, 'A Method for Estimating Concentrations in Transverse Jet Plunes.' Air and Water Pollution Int. J., Pergamon Press. 1966, Vol. 10, pp. 821-843

*(2)* Letter to NRC dated February 5, 1992, "Watts Bar Nuclear Plant (WBN) - Submittal of TVA Fire Protection Report."

*(3)* Letter to NRC dated June 15, 1995, "Watts Bar Nuclear Plant (WBN) - Fire Protection Report (FPR) Revision (TAC M63648)."

*(4)* Letter to NRC dated September 28, 1995, "Watts Bar Nuclear Plant (WBN) - Submittal of Fire Protection Report (FPR) Revision 4 (TAC M63648)."

*(5)* Letter to NRC dated October 1995, "Watts Bar Nuclear Plant (WBN) - Submittal of Fire Protection Report (FPR) Revision 5 (TAC M63648)"

**Table 9.5-1 Deleted by Amendment 52**

**Table 9.5-2 Failure Modes and Effects Analysis of the Standby Diesel Generator Auxiliary Systems (Sheet 1 of 4)**

| ITEM NO. | COMPONENT IDENTIFICATION | FUNCTION | FAILURE MODE | POTENTIAL CAUSE | METHOD OF FAILURE DETECTION | EFFECT ON SYSTEM | EFFECT ON PLANT | REMARKS |
|---|---|---|---|---|---|---|---|---|
| 1 | Fuel oil system from 7-day tank forward to engine on any one of four diesel generator sets in standby service. | Forward fuel to injectors of respective engines. | Delivers insufficient quantity of fuel to engines. | Passive failures such as tank ruptures or piping leaks, clogging of strainers or injectors. See Note 2 in Remarks.<br><br>Also, failure of instrumentation to provide proper signal to pumps and controls. | Control room indication of failure of diesel generator set to start or shuts down. | None: Remaining three diesel generators furnish 100% standby power required by plant. | None | 1. Fuel oil systems of each diesel generator set are completely independent of each other.<br><br>2. Due to redundant pumps and valving arrangements within each DG FO system, single active failures that disable the system are not credible. |

**Table 9.5-2 Failure Modes and Effects Analysis of the Standby Diesel Generator Auxiliary Systems (Sheet 2 of 4)**

| ITEM NO. | COMPONENT IDENTIFICATION | FUNCTION | FAILURE MODE | POTENTIAL CAUSE | METHOD OF FAILURE DETECTION | EFFECT ON SYSTEM | EFFECT ON PLANT | REMARKS |
|---|---|---|---|---|---|---|---|---|
| 2 | Starting air system from diesel generator skid-mounted air accumulator inlet check valve forward to the air starting motors on any one of eight engines in standby service. | Crank engine to start diesel generator set. | Either one of two sets of cranking systems fails to crank engines. | Active failure of any one pneumatic valve or air start motor that would prevent all four air motors of one of two engines to engage and crank diesel generator set, or passive failure due to leakage of air from the accumulator or piping in one of the two cranking systems.<br><br>Also, failure of instrumentation to provide start signal or failure providing a false signal. | Control room indication of failure of diesel generator to start. | None; Duplicate air start system on other engine in the diesel generator set is capable of providing 100% cranking power for both engines in the diesel generator set. | None | Each one of two engines in a diesel generator set includes a cranking system independent of its mate or of the other diesel generator sets. |

**Table 9.5-2 Failure Modes and Effects Analysis of the Standby Diesel Generator Auxiliary Systems (Sheet 3 of 4)**

| ITEM NO. | COMPONENT IDENTIFICATION | FUNCTION | FAILURE MODE | POTENTIAL CAUSE | METHOD OF FAILURE DETECTION | EFFECT ON SYSTEM | EFFECT ON PLANT | REMARKS |
|---|---|---|---|---|---|---|---|---|
| 3 | Lube oil system of any one of eight engines in standby service. | Lubricate engine wearing surfaces and maintain proper piston temperature of respective engine. | Insufficient lube oil flow or oil temperature exceeds limits. | Failure of any one pump or passive failure such as system leakage or filter clogging. | Control room indication of shutdown of affected diesel generator set. | None; Remaining three diesel generator sets are capable of furnishing 100% of the required plant standby power. | None | Lube oil system of each individual engine is separate and independent of all others. |
| 4 | Jacket cooling water system and heat exchanger of any one of eight engines in standby service. | Provide cooling for lube oil coolers, cylinder liner and heads and turbocharger aftercoolers of respective engine. | Fails to maintain correct engine temperature. | Active failure of either pump, thermostatic control valve or immersion water heater, or passive failure of piping or heat exchanger pressure boundary. | Control room indication of high engine coolant temperature in affected engine requiring shutdown of diesel generator set. | None; Remaining three diesel generator sets are capable of furnishing 100% standby power required by plant. | None | Jacket cooling water system of each individual engine is separate and independent of all others. |

**Table 9.5-2 Failure Modes and Effects Analysis of the Standby Diesel Generator Auxiliary Systems (Sheet 4 of 4)**

| ITEM NO. | COMPONENT IDENTIFICATION | FUNCTION | FAILURE MODE | POTENTIAL CAUSE | METHOD OF FAILURE DETECTION | EFFECT ON SYSTEM | EFFECT ON PLANT | REMARKS |
|---|---|---|---|---|---|---|---|---|
| 5 | Combustion air intake system from intake filter through silencer and flexible connection up to turbocharger inlet on any one of eight engines in standby service. | Direct filtered air to turbocharger. | Insufficient or unfiltered air flow to respective engine. | Passive failure of either filter silencer or flexible connection that would either restrict air flow or induct unfiltered air into engine. | Control room indication of engine misfunction or shut down. | None; Remaining three diesel generator sets are capable of furnishing 100% of standby power required by plant. | None | Combustion air intake system of each individual engine is separate and independent of all others. |
| 6 | Exhaust system from turbocharger through expansion joint and silencer on any one of eight engines in service. | Provide path for exhaust. | Restricts flow. | Passive failure of silencer. | Control room indication of engine malfunction or shut down. | None; Remaining three diesel generator sets are capable of furnishing 100% of standby power required by plant. | None | Exhaust system on each individual engine is separate and independent of all others. |

**Figure 9.5-1 Deleted by Amendment 87**

**Figure 9.5-2 Deleted by Amendment 87**

**Figure 9.5-3 Deleted by Amendment 87**

**Figure 9.5-4 Deleted by Amendment 87**

**Figure 9.5-5 Deleted by Amendment 87**

**Figure 9.5-6 Deleted by Amendment 87**

**Figure 9.5-7 Deleted by Amendment 87**

**Figure 9.5-8 Deleted by Amendment 87**

**Figure 9.5-9 Deleted by Amendment 87**

**Figure 9.5-10 Deleted by Amendment 87**

**Figure 9.5-11 Deleted by Amendment 87**

**Figure 9.5-12 Deleted by Amendment 87**

**Figure 9.5-13 Deleted by Amendment 87**

**Figure 9.5-14 Deleted by Amendment 87**

**Figure 9.5-15 Deleted by Amendment 87**

Figure 9.5-16 Deleted by Amendment 95

D

Figure 9.5-17 Deleted by Amendment 95

**Figure 9.5-18 Deleted by Amendment 90**

| POSTULATED CONDITIONS | INTERPLANT COMMUNICATIONS | | | | | | | INTRAPLANT COMMUNICATIONS | | | | | |
|---|---|---|---|---|---|---|---|---|---|---|---|---|---|
| | MICROWAVE RADIO (MW) | POWER LINE CARRIER | PUBLIC TEL LINES | EMER RADIO SYS | POWER SYSTEM OPERATIONS VHF RADIO | PUBLIC SAFETY SERVICE (SECURITY) VHF RADIO | LOCAL SHERIFF RADIO | ONSITE RADIO PAGING | INPLANT RADIO SYSTEM | PRIVATE AUTO TELEPHONE EXCHANGE (PAX) | SOUND POWERED TELEPHONE SYSTEMS | CLOSED CIRCUIT TELEVISION (CCTV) | CODE CALL, ALARMS & PAGING SYSTEM |
| FIRE IN COMMUNICATIONS ROOM (TOTAL DESTRUCTION) | | | | | X | X | X | | X | | X | X | |
| FIRE IN CABLE TUNNEL TO SWITCHYARD | X | | | X | X | X | X | X | X | X | X | X | PARTIAL |
| FIRE IN CONTROL ROOM | X | X | X | X | X | X | X | X | X | X | PARTIAL | PARTIAL | PARTIAL |
| DBA | X | X | X | X | X | X | X | X | X | X | X | | X |
| SSE | | | | | | PARTIAL (VEHICULAR & PORTABLE UNITS) | | | | | | | |
| LOSS OF OFFSITE POWER | X | X | X | X | X | X | X | X | X | X | X | | X |
| LOSS OF ALL AC POWER FOR UP TO 3 HOURS | X | X | X | X | | X | | X | X | X | X | | X |
| MAXIMUM POSSIBLE FLOOD | | | | | X | | X | | | | PARTIAL | | |
| TORNADO (MICROWAVE ANTENNAS & REFLECTORS DESTROYED) | | X | X | | X | X | X | X | X | X LOSS OF MW TRUNKS | X | X | X |

NOTES:

1. "X" IN BLOCK INDICATES AVAILABILITY OF THE SERVICE DURING THE POSTULATED CONDITION.
2. "PARTIAL" IN BLOCK INDICATES THE LOSS OF THAT PORTION OF THE SYSTEM LOCATED WHERE THE ACCIDENT OCCURRED. THE SURVIVING EQUIPMENT WILL REMAIN FUNCTIONAL.

REVISED BY AMENDTMENT 63

WATTS BAR NUCLEAR PLANT
FINAL SAFETY
ANALYSIS REPORT

WATTS BAR NUCLEAR PLANT
COMMUNICATIONS EQUIPMENT AVAILABILITY
FIGURE 9.5-19

Figure 9.5-19 Watts Bar Nuclear Plant-Communications Equipment Availability

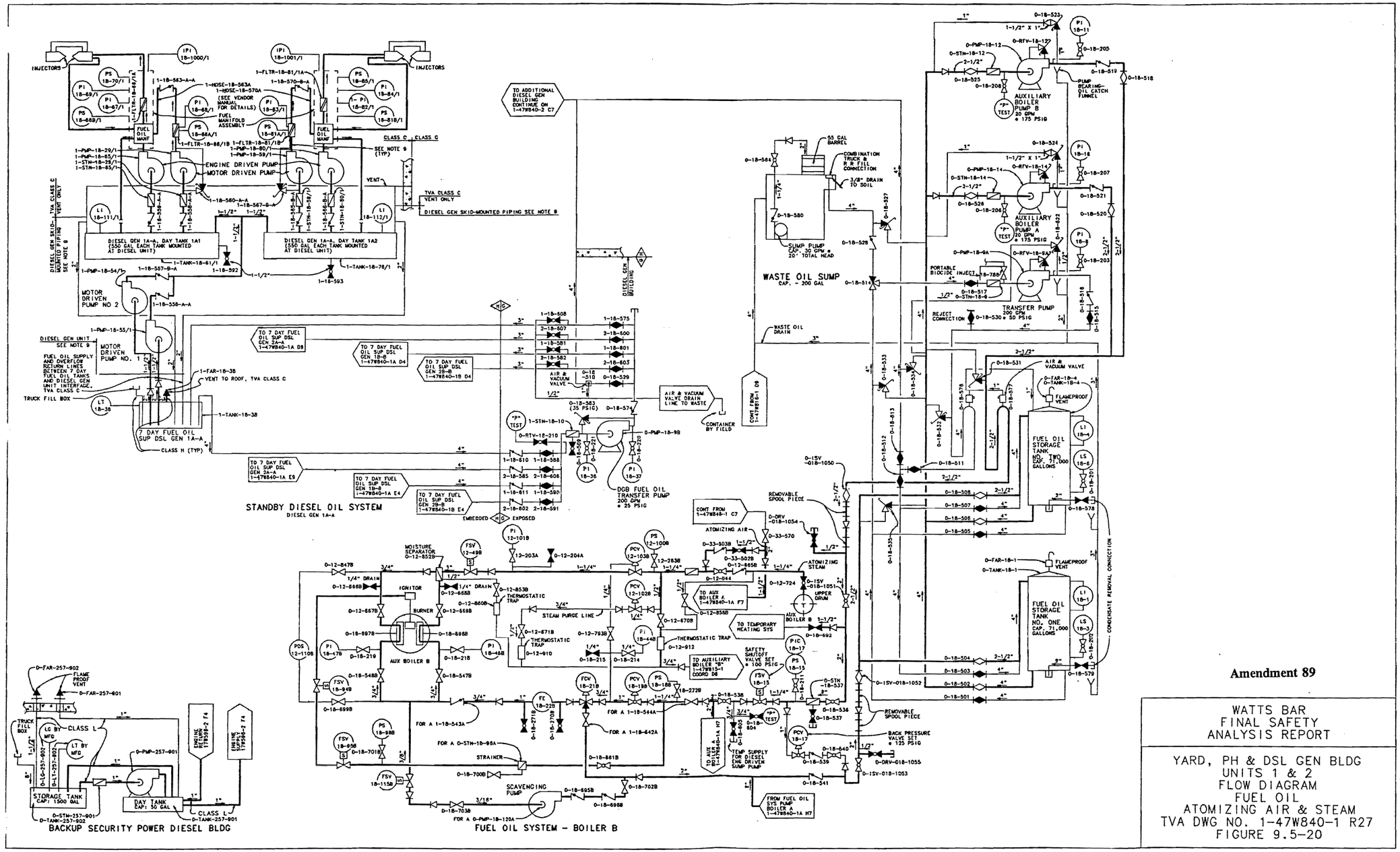


Figure 9.5-20 Yard, Powerhouse, and Diesel Generator Building Units 1 & 2 Flow Diagram Fuel Oil Atomizing Air & Steam

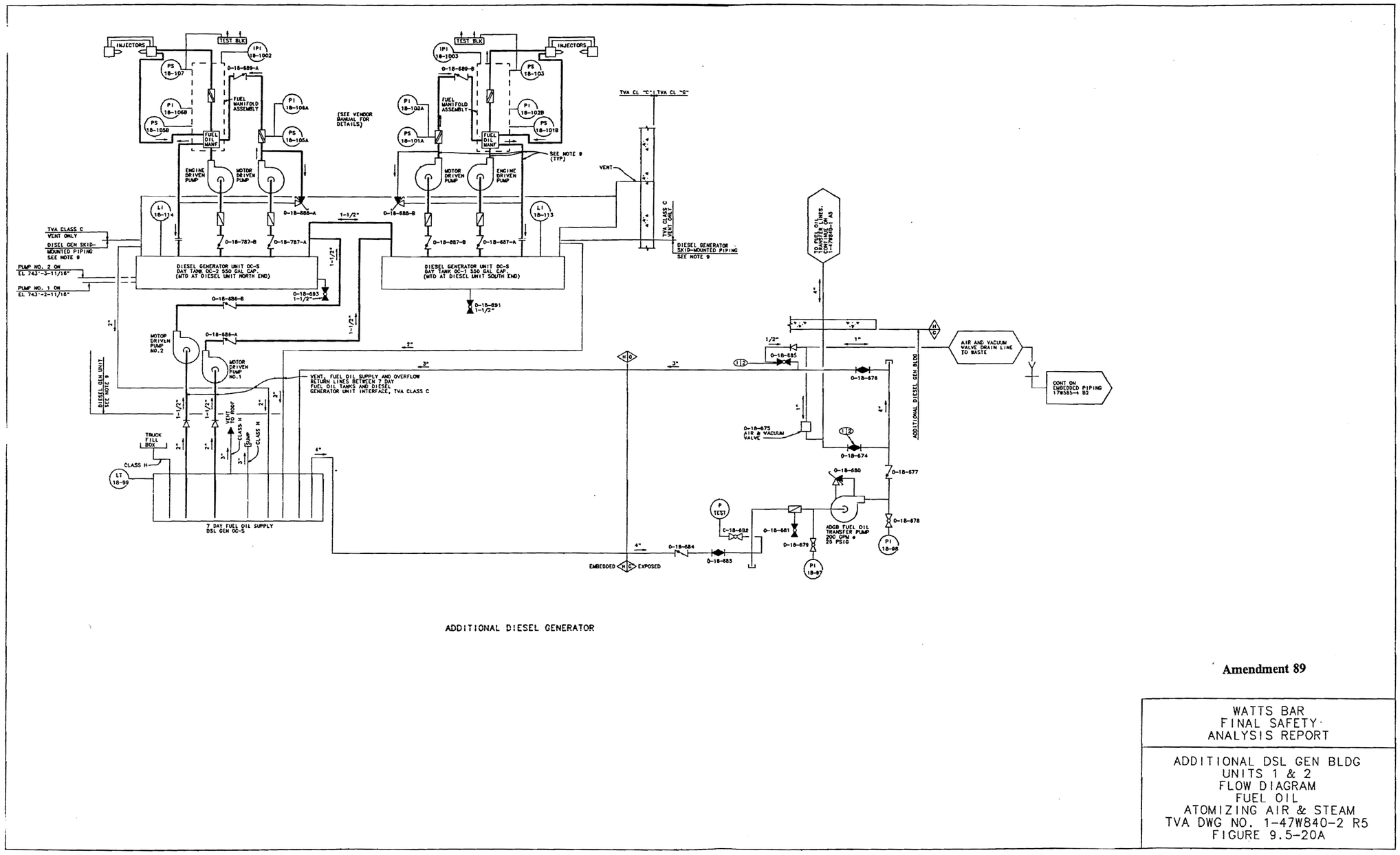


Amendment 89

WATTS BAR
FINAL SAFETY
ANALYSIS REPORT

ADDITIONAL DSL GEN BLDG
UNITS 1 & 2
FLOW DIAGRAM
FUEL OIL
ATOMIZING AIR & STEAM
TVA DWG NO. 1-47W840-2 R5
FIGURE 9.5-20A

PROCADAM MAINTAINED DRAWING
THIS CONFIGURATION CONTROL DRAWING IS MAINTAINED BY THE MCH CAD UNIT AND IS NOT PART OF THE TVA PROCADAM DATABASE
DOCUMENT 0-2049

**Figure 9.5-20a Additional Dsl Gen Bldg Units 1 & 2 Flow Diagram Fuel Oil Atomizing Air & Steam**

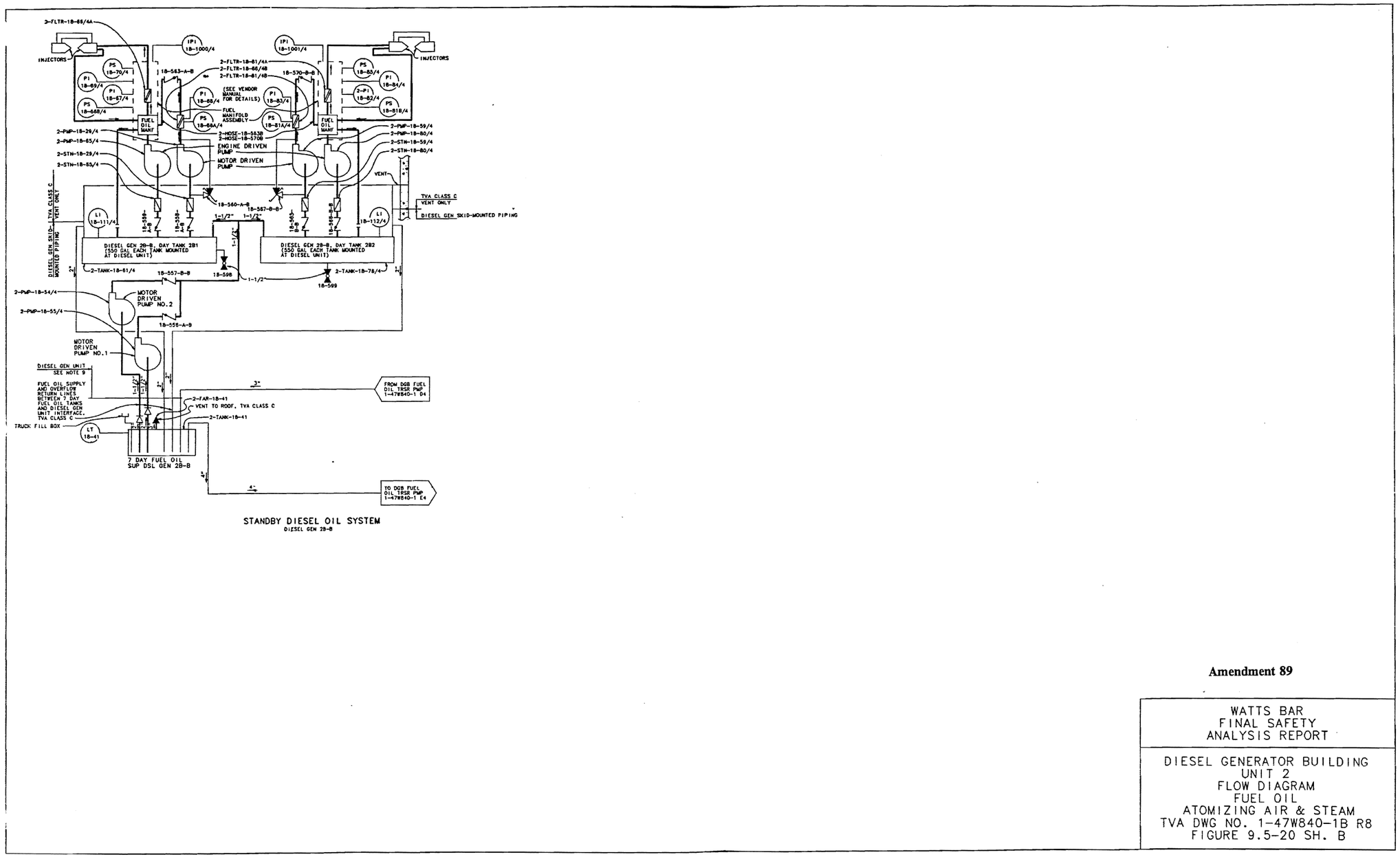


Amendment 89

WATTS BAR
FINAL SAFETY
ANALYSIS REPORT

DIESEL GENERATOR BUILDING
UNIT 2
FLOW DIAGRAM
FUEL OIL
ATOMIZING AIR & STEAM
TVA DWG NO. 1-47W840-1B R8
FIGURE 9.5-20 SH. B

PROCADAM MAINTAINED DRAWING
THIS CONFIGURATION CONTROL DRAWING IS MAINTAINED BY THE WBN CAD UNIT AND IS NOW PART OF THE TVA PROCADAM DATABASE.

**Figure 9.5-20b Diesel Generator Building Unit 2 Flow Diagram Fuel Oil Atomizing Air & Steam**

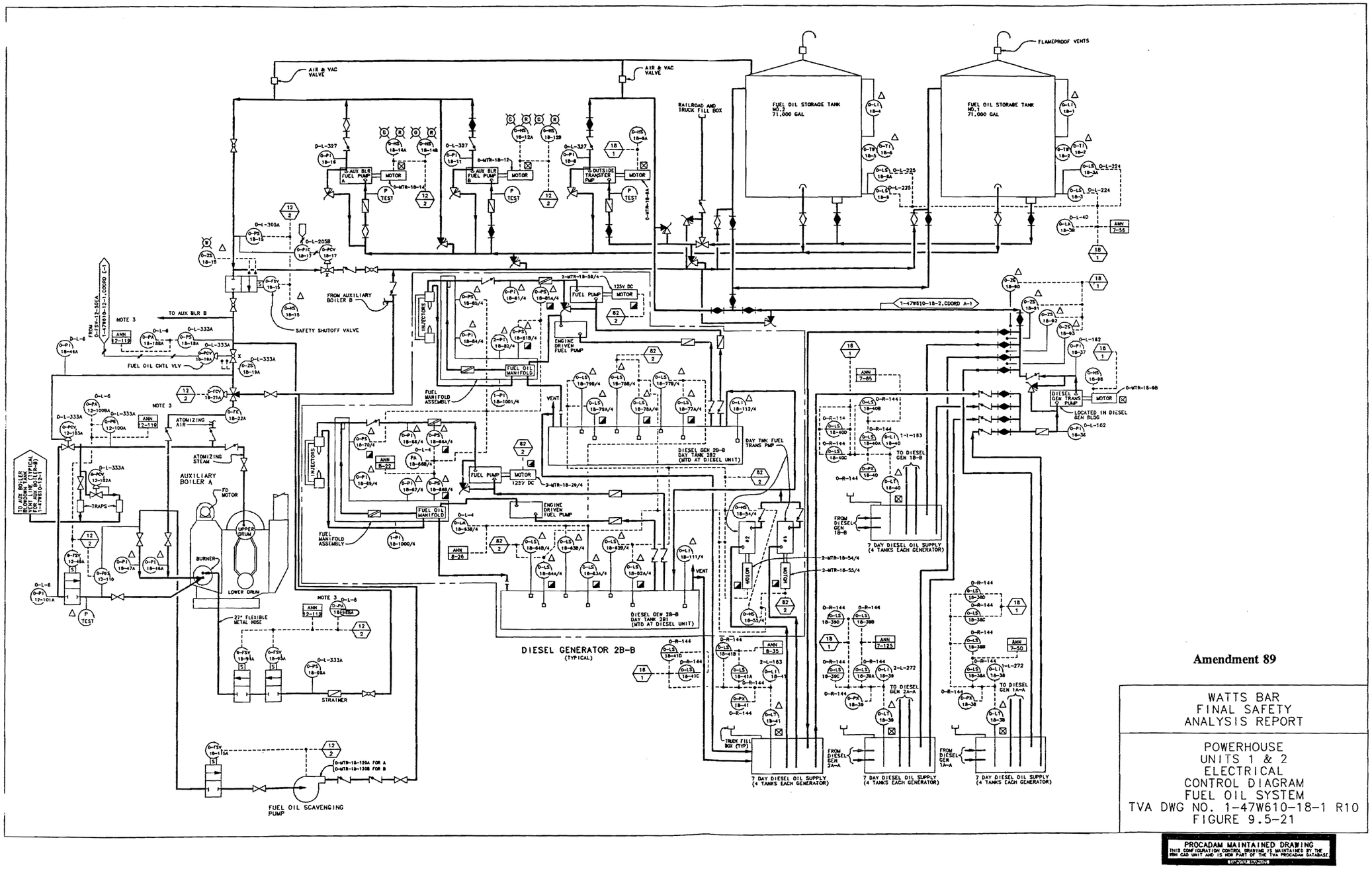


Figure 9.5-21 Powerhouse Units 1 & 2 Electrical Control Diagram for Fuel Oil System

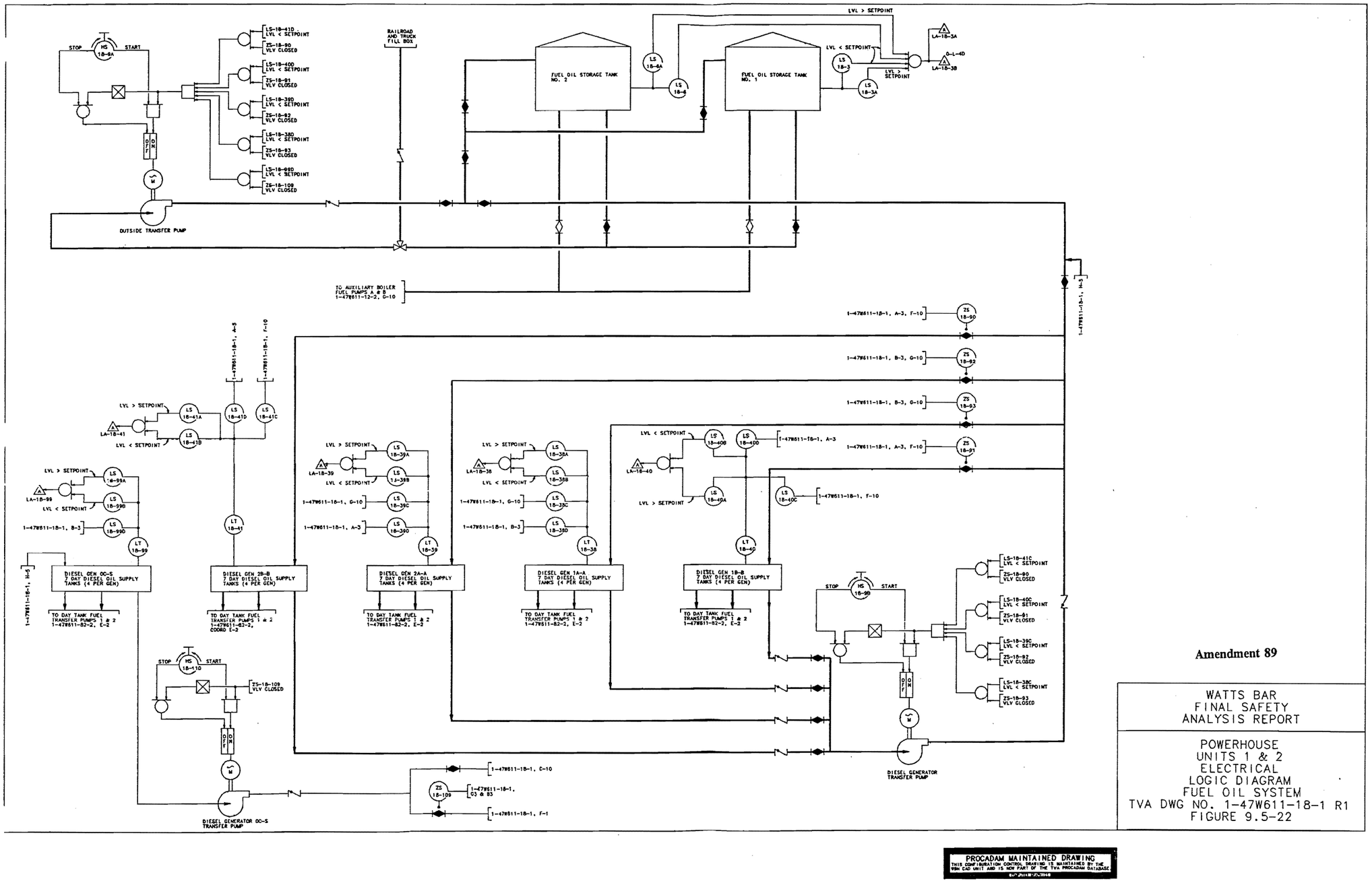


Figure 9.5-22 Powerhouse Units 1 & 2 Electrical Logic Diagram for Fuel Oil System

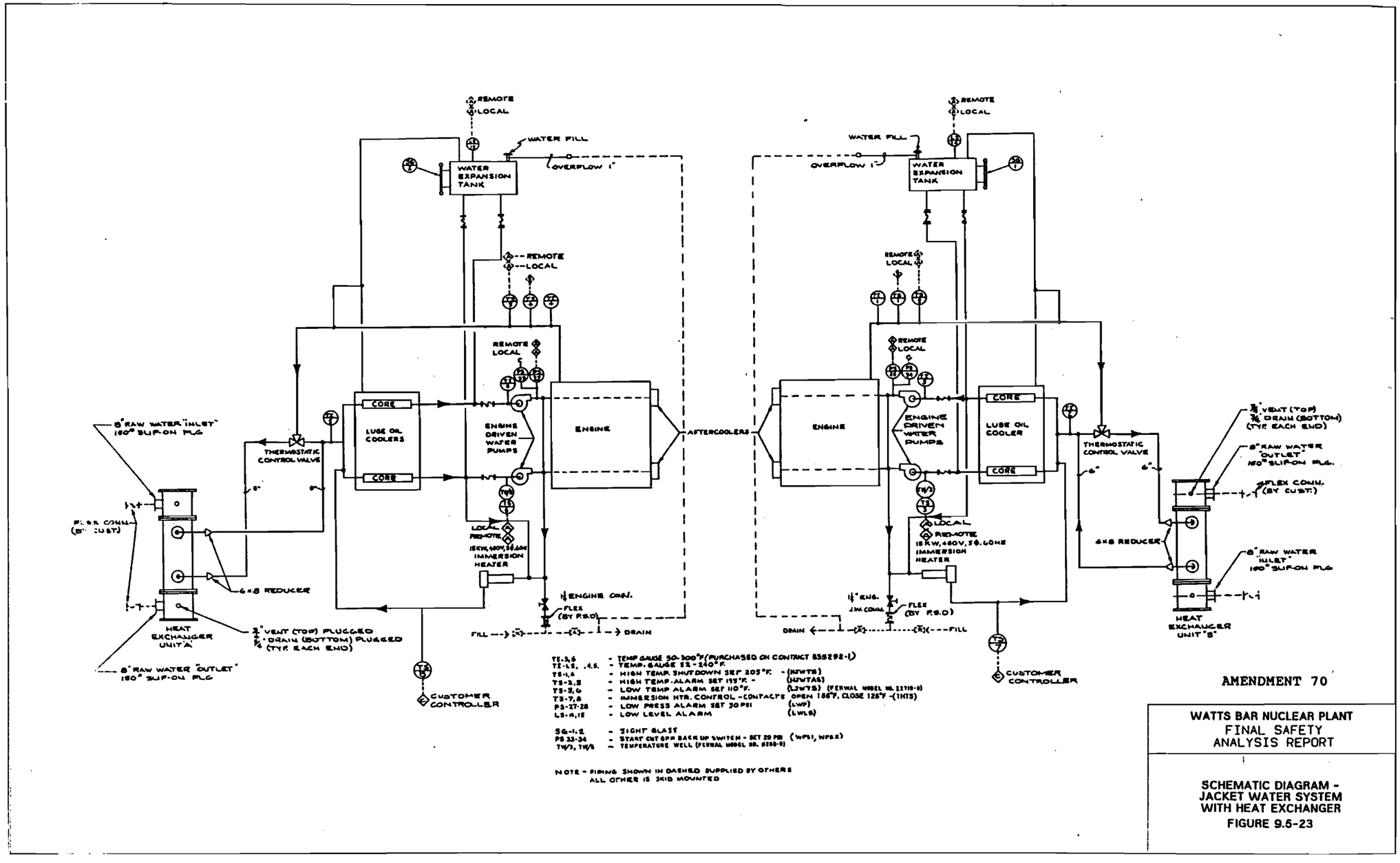


Figure 9.5-23 Schematic Diagram -Jacket Water System With Heat Exchanger

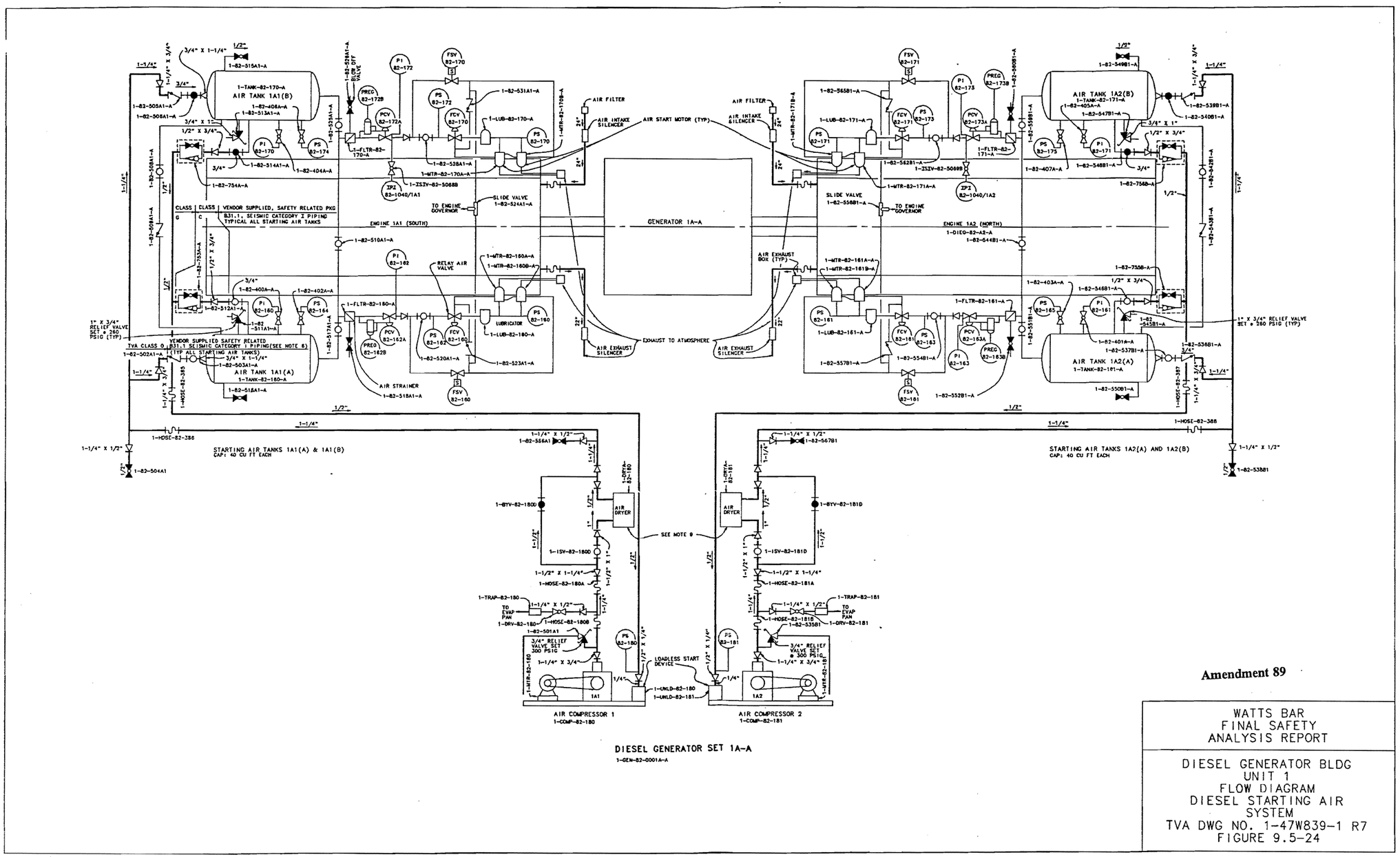


Amendment 89

WATTS BAR
FINAL SAFETY
ANALYSIS REPORT

DIESEL GENERATOR BLDG
UNIT 1
FLOW DIAGRAM
DIESEL STARTING AIR
SYSTEM
TVA DWG NO. 1-47W839-1 R7
FIGURE 9.5-24

PROCADAM MAINTAINED DRAWING
THIS CONFIGURATION CONTROL DRAWING IS MAINTAINED BY THE WBN CAD UNIT AND IS NOW PART OF THE TVA PROCADAM DATABASE!

**Figure 9.5-24 Diesel Generator Building Unit 1 Flow Diagram for Diesel Starting Air System**

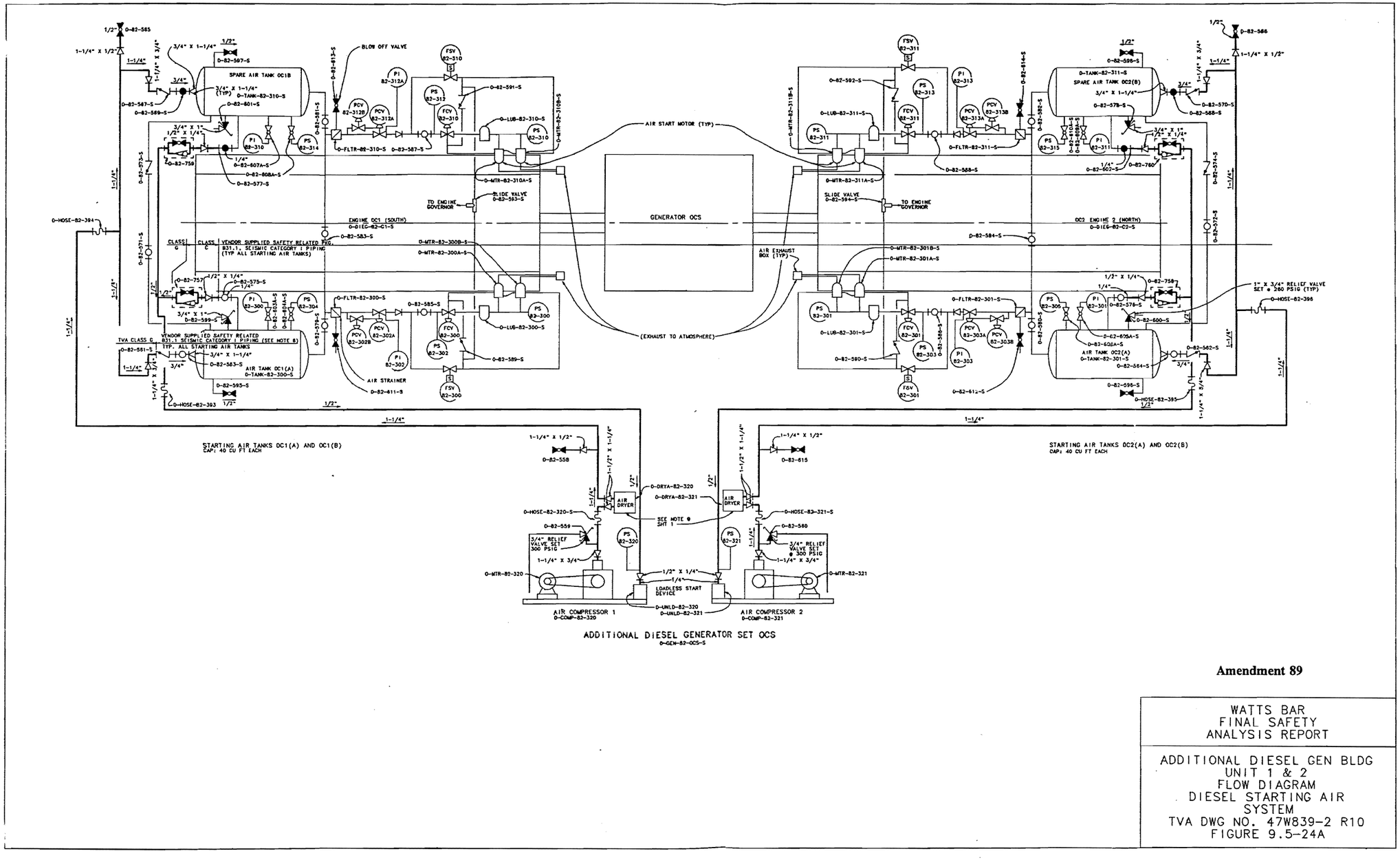


**Amendment 89**

WATTS BAR
FINAL SAFETY
ANALYSIS REPORT

ADDITIONAL DIESEL GEN BLDG
UNIT 1 & 2
FLOW DIAGRAM
DIESEL STARTING AIR
SYSTEM
TVA DWG NO. 47W839-2 R10
FIGURE 9.5-24A

PROCADAM MAINTAINED DRAWING
THIS CONFIGURATION CONTROL DRAWING IS MAINTAINED BY THE WBN CAD UNIT AND IS NOW PART OF THE TVA PROCADAM DATABASE.

**Figure 9.5-24a Additional Diesel Gen Bldg Unit 1 & 2 Flow Diagram Diesel Starting Air System**

**Figure 9.5-25 Deleted by Amendment 88**

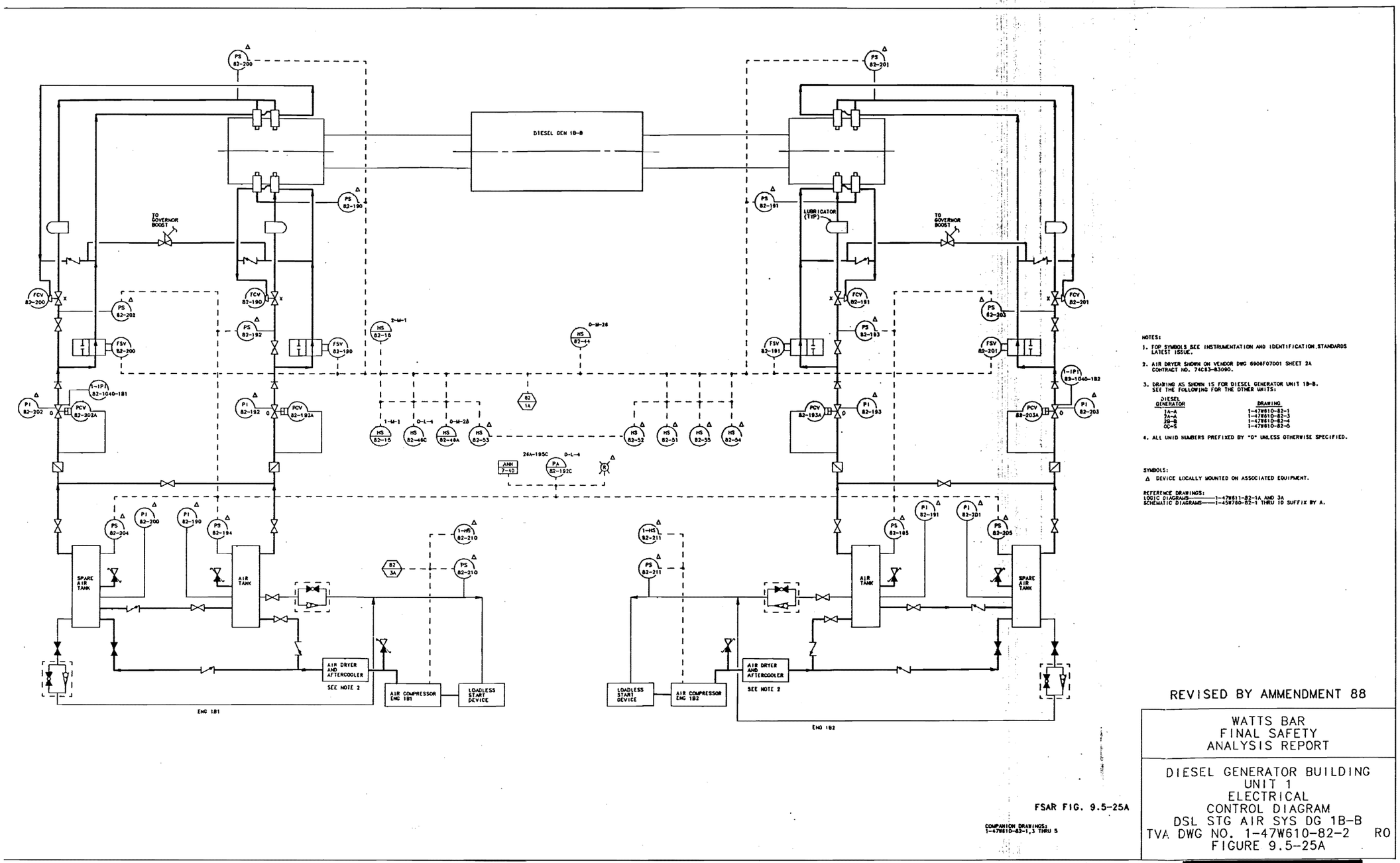


**Figure 9.5-25a Diesel Generator Building Unit 1 Electrical Control Diagram Dsl Stg Air Sys DG 1B-B**

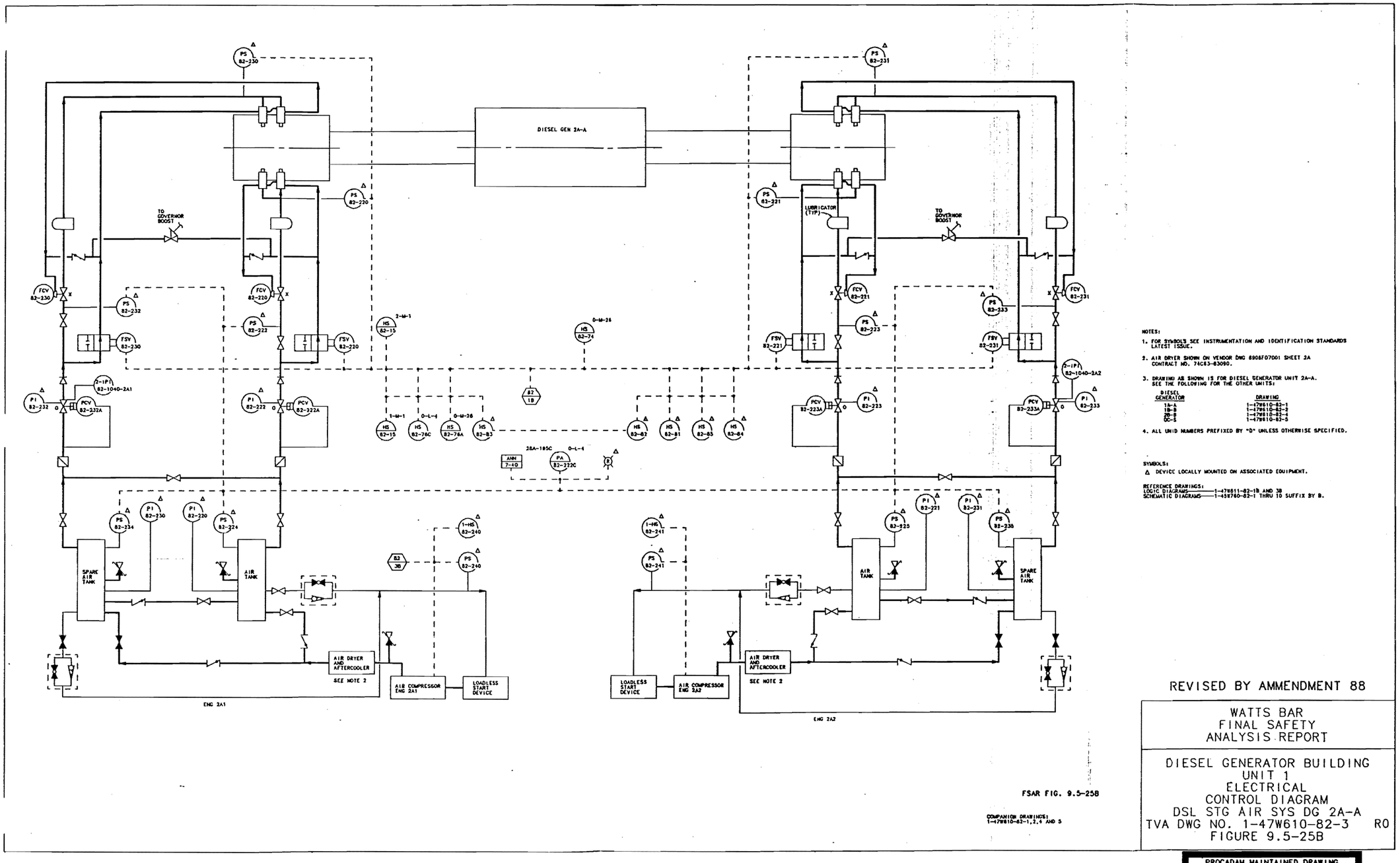


**Figure 9.5-25b Diesel Generator Building Unit 1 Electrical Control Diagram Dsl Stg Air Sys DG 2A-A**

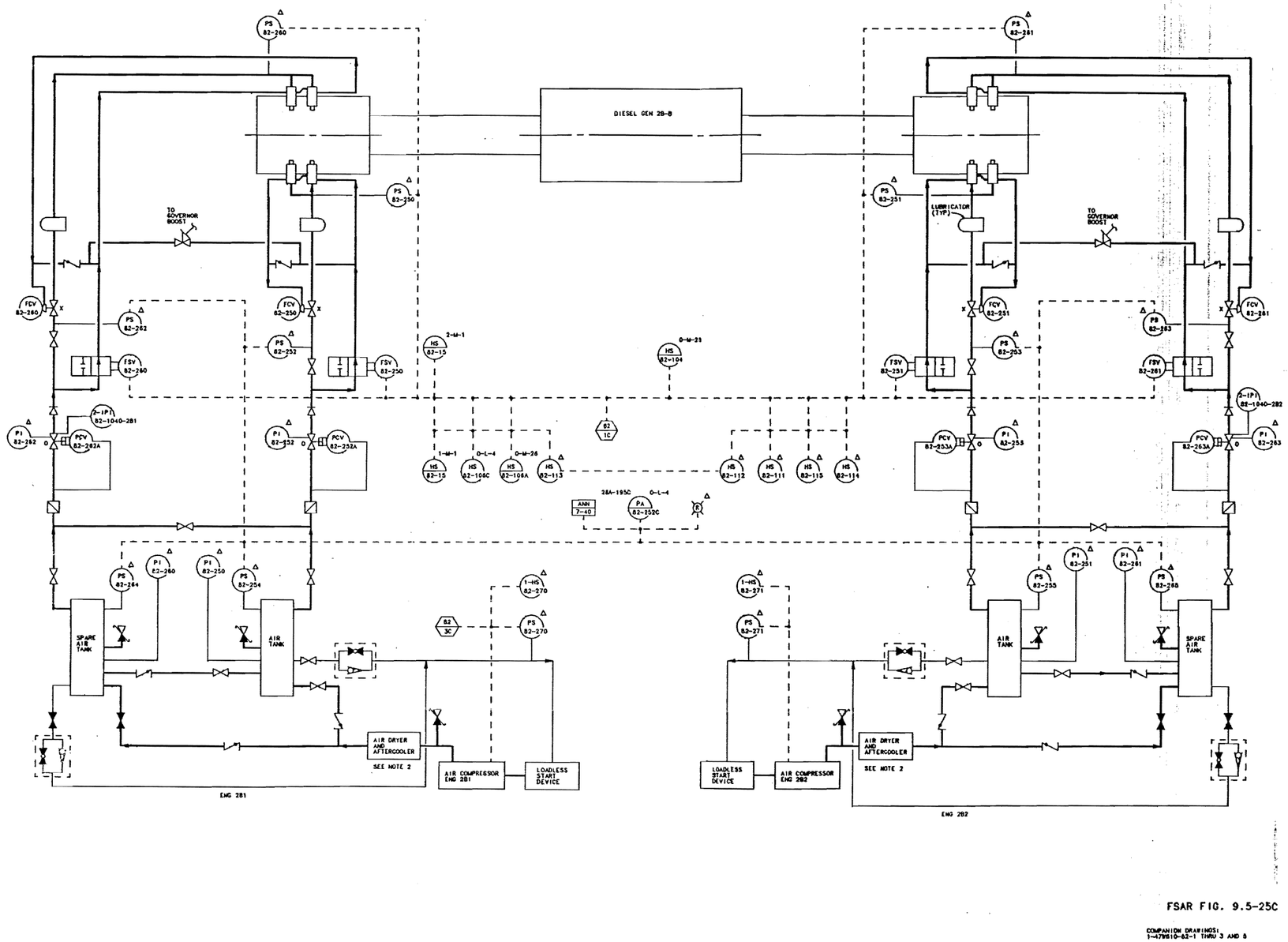


NOTES:

1. FOR SYMBOLS SEE INSTRUMENTATION AND IDENTIFICATION STANDARDS LATEST ISSUE.
2. AIR DRYER SHOWN ON VENDOR DWG 6906F07001 SHEET 2A CONTRACT NO. 74C83-83090.
3. DRAWING AS SHOWN IS FOR DIESEL GENERATOR UNIT 2B-B. SEE THE FOLLOWING FOR THE OTHER UNITS:

| DIESEL GENERATOR | DRAWING |
|---|---|
| 1A-A | 1-47W610-82-1 |
| 1B-B | 1-47W610-82-2 |
| 2A-A | 1-47W610-82-3 |
| 2C-S | 1-47W610-82-5 |

4. ALL UNID NUMBERS PREFIXED BY "0" UNLESS OTHERWISE SPECIFIED.

SYMBOLS:

Δ DEVICE LOCALLY MOUNTED ON ASSOCIATED EQUIPMENT.

REFERENCE DRAWINGS:
LOGIC DIAGRAMS——1-47W611-82-1C AND 3C
SCHEMATIC DIAGRAMS——1-45W760-82-1 THRU 10 SUFFIX BY C

REVISED BY AMMENDMENT 88

WATTS BAR
FINAL SAFETY
ANALYSIS REPORT

DIESEL GENERATOR BUILDING
UNIT 1
ELECTRICAL
CONTROL DIAGRAM
DSL STG AIR SYS DG 2B-B
TVA DWG NO. 1-47W610-82-4 R0
FIGURE 9.5-25C

FSAR FIG. 9.5-25C

COMPANION DRAWINGS:
1-47W610-82-1 THRU 3 AND 5

PROCADAM MAINTAINED DRAWING
THIS CONFIGURATION CONTROL DRAWING IS MAINTAINED BY TVA NON CAD UNIT AND IS NOW PART OF THE TVA PROCADAM DATABASE

**Figure 9.5-25c Diesel Generator Building Unit 1 Electrical Control Diagram Dsl Stg Air Sys DG 2B-B**

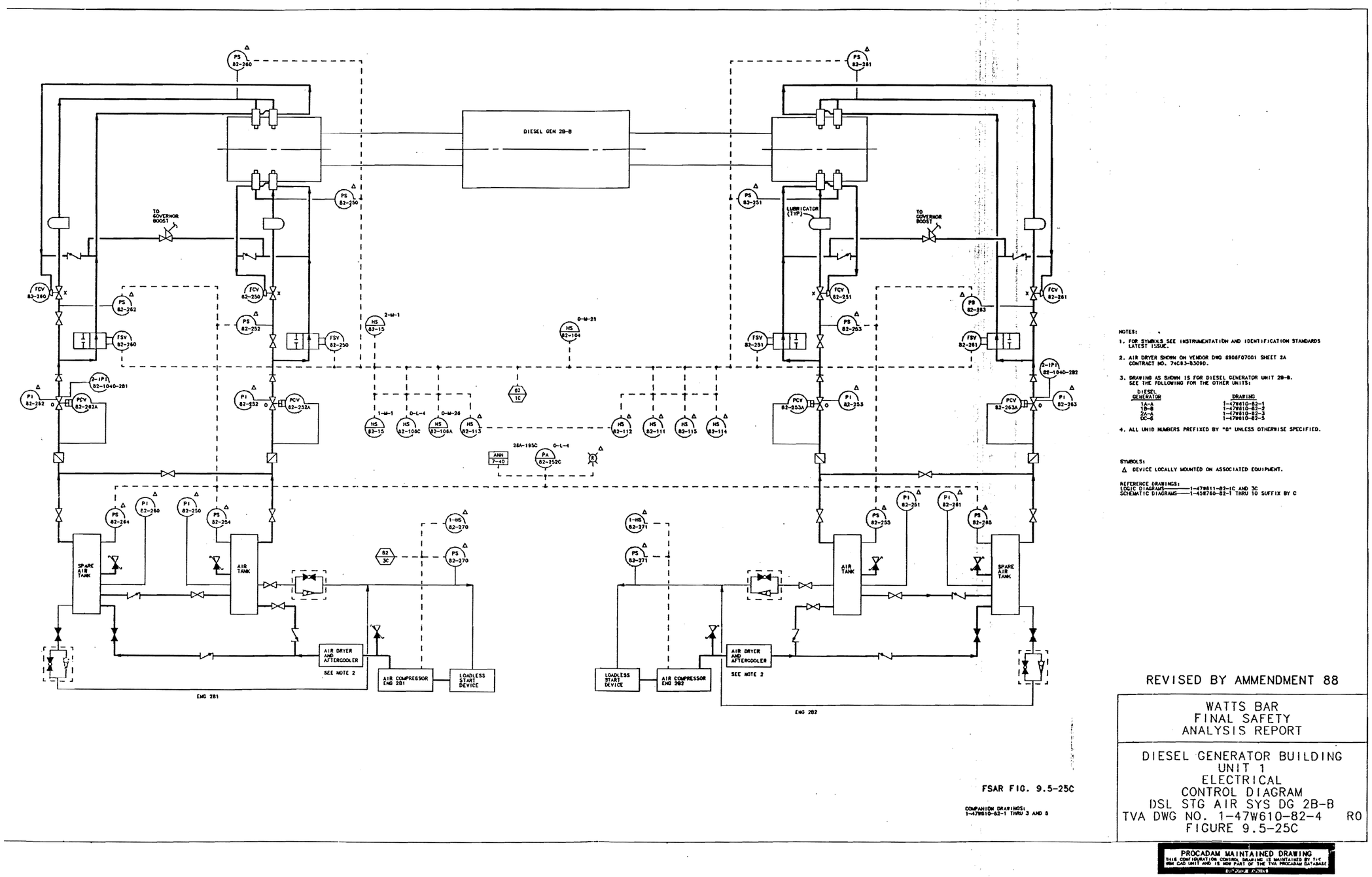


**Figure 9.5-25d Diesel Generator Building Unit 1 Electrical Control Diagram Dsl Stg Air Sys DG OC-S**

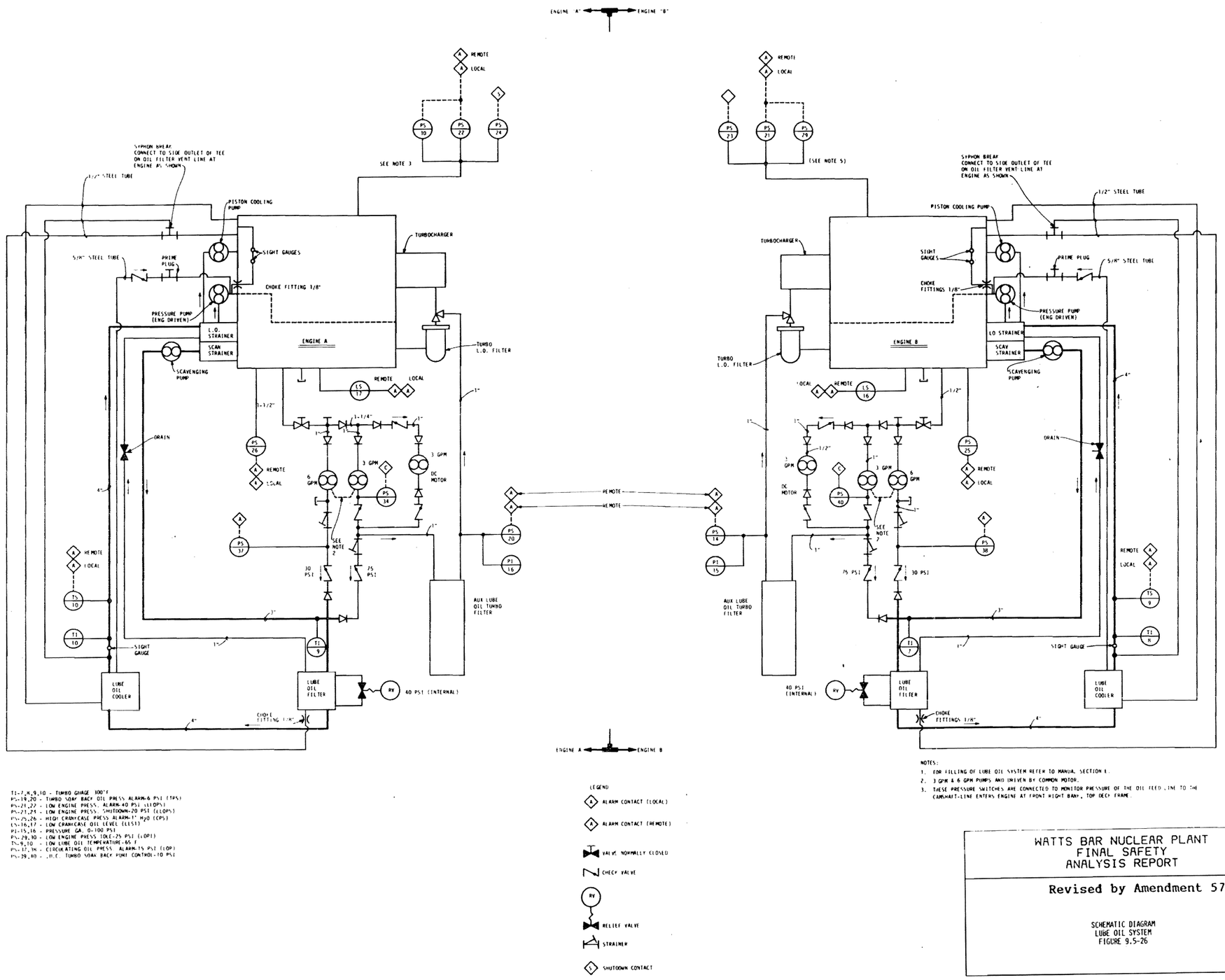


**Figure 9.5-26 Schematic Diagram Lube Oil System**

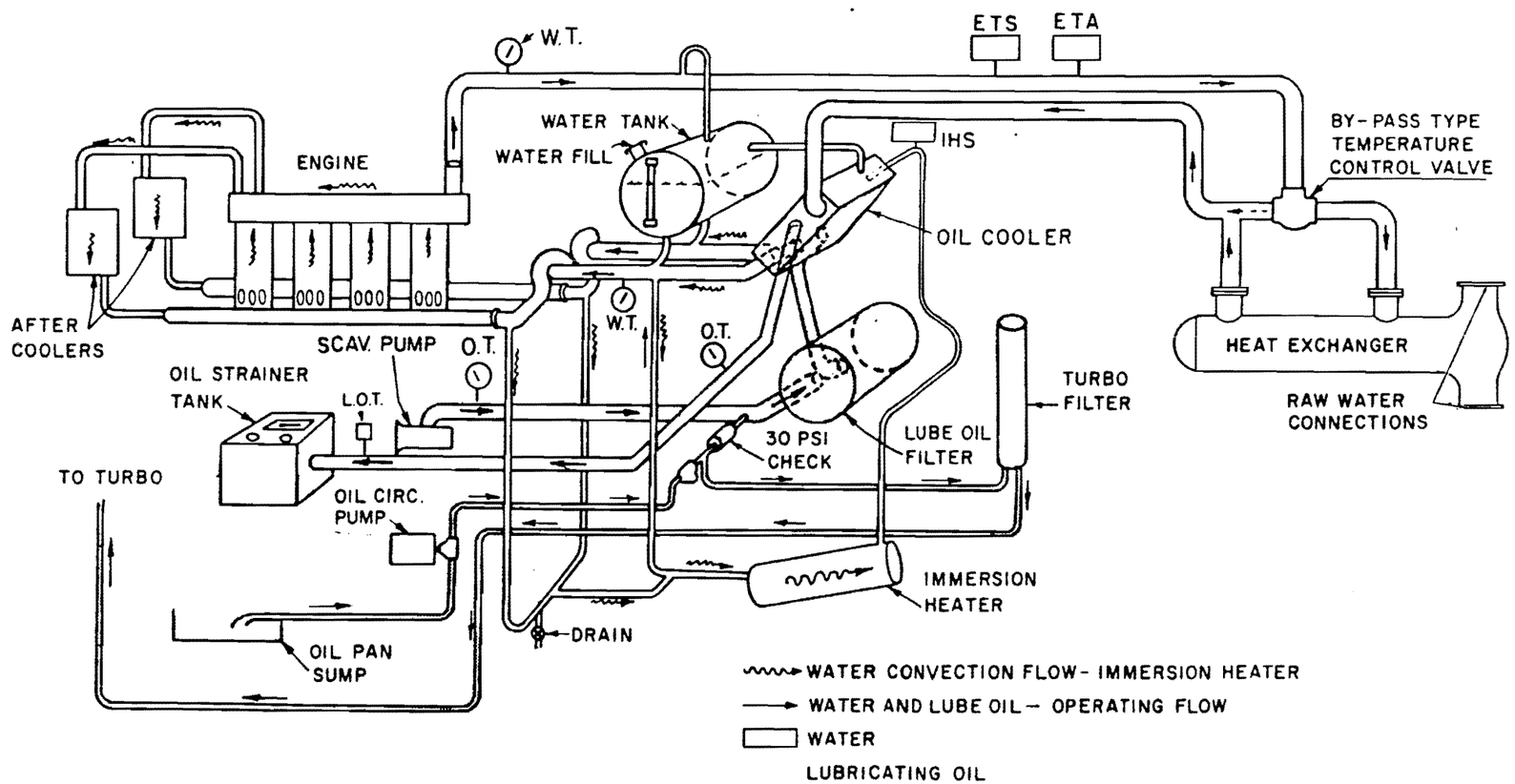


LUBRICATING OIL SYSTEM
AND ENGINE COOLING WATER SYSTEM
WITH IMMERSION HEATER SYSTEM - TURBOCHARGED UNITS

| WATTS BAR NUCLEAR PLANT<br>FINAL SAFETY<br>ANALYSIS REPORT |
| --- |
| DIESEL ENGINE LUBRICATION SYSTEM<br><br>Figure 9.5-27 |

**Figure 9.5-27 Diesel Engine Lubrication System**

**Figure 9.5-28 Deleted by Amendment 41**

| ENG | EXHAUST SINLENCER |
|---|---|
| 1A1 | SILN-82-101 |
| 1A2 | SILN-82-102 |
| 1B1 | SILN-82-103 |
| 1B2 | SILN-82-104 |
| 2A1 | SILN-82-201 |
| 2A2 | SILN-82-202 |
| 2B1 | SILN-82-203 |
| 2B2 | SILN-82-204 |

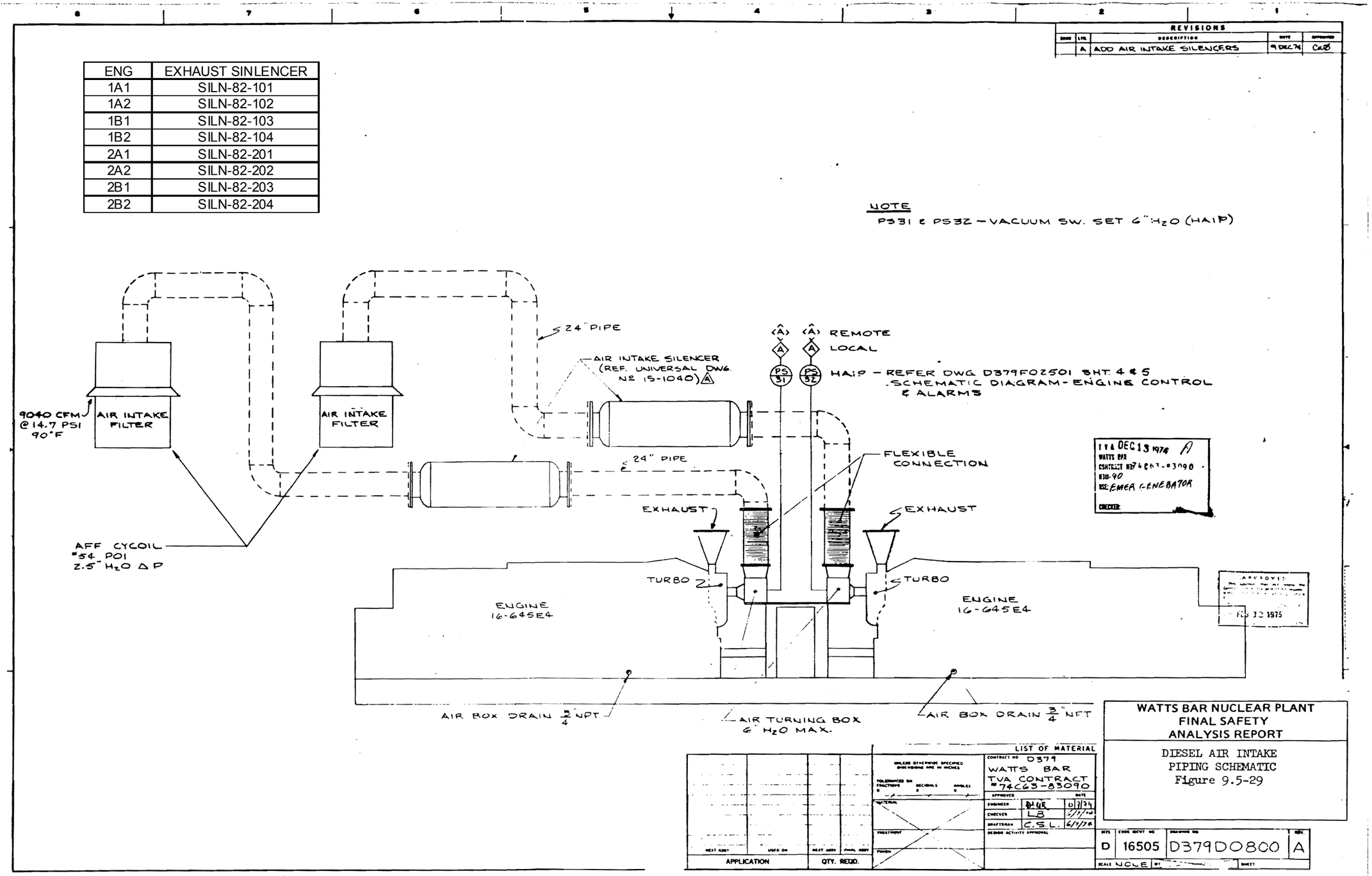


Figure 9.5-29 Diesel Air Intake Piping Schematic

| ENG | EXHAUST SINLENCER |
|---|---|
| 1A1 | SILN-82-101 |
| 1A2 | SILN-82-102 |
| 1B1 | SILN-82-103 |
| 1B2 | SILN-82-104 |
| 2A1 | SILN-82-201 |
| 2A2 | SILN-82-202 |
| 2B1 | SILN-82-203 |
| 2B2 | SILN-82-204 |

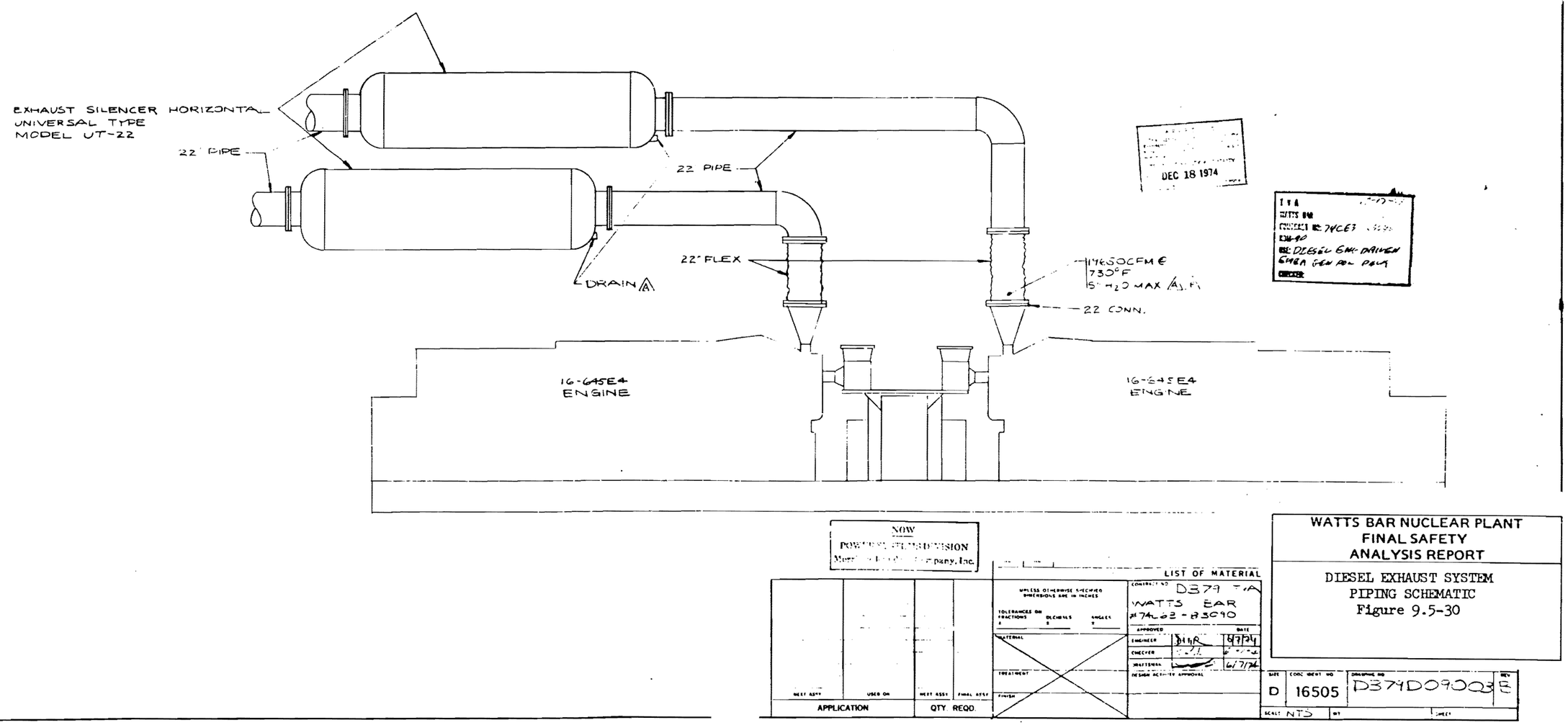


Figure 9.5-30 Diesel Exhaust System Piping Schematic

**Figure 9.5-31 Deleted by Amendment 87**