DEPARTMENT OF THE ARMY
US ARMY RESEARCH, DEVELOPMENT AND ENGINEERING COMMAND
ARMY RESEARCH LABORATORY
ABERDEEN PROVING GROUND MD 21005-5066

May 10, 2010

Q-5

Experimentation Support Group

RECEIVED
REGION 1
2010 MAY 14 AM 11:03

Nuclear Regulatory Commission
Region I
Attn: Elizabeth Ullrich
475 Allendale Road
King of Prussia, Pennsylvania 19406

SMB-141

Reference: NRC Docket No. 040-06394, Control No. ~~142408~~ 144649
NMS

Dear Ms. Ullrich,

The US Army, Aberdeen Proving Ground (APG), Maryland, seeks concurrence by the US Nuclear Regulatory Commission (NRC) to dispose of soil contaminated with low concentrations of depleted uranium, which meets the definition of an unimportant quantity of source material at the US Ecology Idaho (USEI) Resource Conversation and Recovery Act (RCRA) Subtitle C disposal facility located in Grand View, Idaho. The Grand View facility permit issued to US Ecology Idaho, Inc. (USEI) by the Idaho Department of Environmental Quality specifically authorizes receipt and disposal of unimportant quantities of source material pursuant to the 10 CFR Part 40.13(a). We request that NRC concur with the alternate disposal pursuant to the provisions of 10 CFR Part 40.13(a).

Request for concurrence to dispose of Materials from APG Building 1103A Area under 10 CFR Part 40.13, "Unimportant Quantities of Source Material" at the US Ecology - Grand View, Idaho, RCRA Subtitle C Facility. The waste consists of approximately 300 tons of contaminated soils removed from the Building 1103A Area Site at APG. The waste has been characterized and a Safety Assessment has been performed demonstrating that alternate disposal at the USEI facility will be protective of human health. For the purposes of this assessment the radiological concentrations were assumed to be at USEI's waste acceptance criteria limit for depleted uranium. The actual concentrations are significantly less than those concentrations used to perform the dose assessment. The Waste Characterization and Safety Assessment, including supporting documentation, is provided in the enclosure to this letter.

144649

Printed on Recycled Paper

NMSS/RGN1 MATERIALS-002

Based on the foregoing, APG respectfully requests an expedited review and concurrence of the requested alternate disposal.

Please feel free to contact Mr. Richard A. Markland, (410) 278-6354, markland@arl.army.mil if you have any questions.

Sincerely,

Pamela E. Fry
Experimentation Support Manager

Enclosure

Aberdeen Proving Ground

Evaluation in Support of Alternate Waste Disposal Procedures
For Unimportant Quantities of Source Materials [10 CFR 40.13(a)]

1. INTRODUCTION

The proposed disposal procedures would allow the Aberdeen Proving Ground to dispose of materials contaminated with depleted uranium, which meets the definition of an unimportant quantity of source material at the US Ecology RCRA facility located near Grand View, Idaho. A description of the material to be disposed is included in section 3. The description includes physical and chemical properties of the material important to risk evaluation and the proposed conditions of waste disposal. The APG has performed a conservative radiological dose assessment of the material and determined that the potential dose to the workers involved in the transportation and placement of the material and to members of the general public after site closure will be no more than a few millirem per year total effective dose equivalent (TEDE). This dose will be a small fraction of the NRC decommissioning limits for exposure to members of the public of 25 millirem/yr TEDE.

The APG has developed this request and related safety assessment in consultation with US Ecology, including health physics personnel responsible for the receiving disposal facility's radiological performance assessment.

2. DISPOSAL SITE CHARACTERISTICS

A description of the USEI facility located near Grand View, Idaho is attached (Attachment 1).

3. DESCRIPTION OF THE WASTE

The waste consists of approximately 305 tons of soil and building material contaminated with concentrations equal to or less than the concentrations of the radionuclides listed in Table 1. The waste will be disposed in a permitted RCRA cell at US Ecology Idaho.

Table 1. Concentrations of Parent Nuclides (pCi/g)

U-234	U-235	U-238
60	3	169

4. RADIOLOGICAL ASSESSMENTS:

The following scenarios demonstrate that the dose equivalent for the Maximally Exposed Individual (MEI) will not exceed a few (i.e. five) millirem per year. Because the US Ecology site is not licensed by the NRC, all transportation personnel and site workers are

ENCLOSURE

limited to the "few millirem per year" standard for members of the general public, defined in NRC Regulatory Issue Summary 2004-08.

4.1. USEI Worker Dose Assessment

The maximum external doses expected to be experienced by workers at the US Ecology site are summarized in Table 2 with explanations given in sections 4.1.1 through 4.1.5. Because of the small volume of waste, the dose calculations are based on the conservative assumption that one operator will perform all of a given task type e.g. one gondola surveyor, one truck driver, etc.

Table 2. External Dose to Operators by Job Function

Job Function	Dose Rate (mrem/hr)	Time to perform task (hours)	No. of Iterations	Project Dose per person (mrem)
Gondola Surveyor	3.03E-02	0.33	3	3.00E-02
Excavator Operator	2.46E-02	0.58	3	4.28E-02
Truck Surveyor	3.28E-02	0.083	9	2.45E-02
Truck Driver	3.28E-02	0.75	9	2.21E-01
Cell Operator	2.59E-02	0.25	3	1.94E-02

4.1.1. Gondola Surveyor

The material will be transported to USEI in gondola cars which will be received at the Idaho Rail Transfer Facility (RTF). Each car will be surveyed prior to offloading, each survey taking 20 minutes. The surveyor will stand approximately one meter from the car during the survey. The dose rate at this location is 3.03×10^{-2} mrem per hour (Attachment 2). The surveying work for the 3 gondola cars of material is assigned to one worker, resulting in a total project dose of 3.00×10^{-2} mrem.

4.1.2. Excavator Operator

After the survey has been completed, an excavator operator will transfer the material into dump trucks for transport to the disposal site. This process takes approximately 35 minutes. The operator will occupy a position one meter from the gondola, where the radiation field is 2.46×10^{-2} mrem per hour (Attachment 3), resulting in a total project dose of 4.28×10^{-2} mrem.

Because of high dust loading in the RTF and the time it takes to transfer material from the gondolas, the excavator operator is the individual most likely to experience uptake. The maximum internal dose to an operator was calculated using the ICRP 30 conversion factors for the committed dose equivalent. The dust loading of 0.2 mg/m^3 is from measurements of respirable dust samples collected at the RTF. As detailed in Table 3, the total project inhalation dose for an excavation operator is 0.012 mrem. This dose does not account for the protection factor of the operator's respirator.

Table 3. Inhalation Dose to the Maximally Exposed Individual			
Isotope	U-238	U-234	U-235
Conc. In Waste (pCi/g)	169	60	3
Inhalation Factor ($g_{inhaled/rc}$)	1.40E-04	1.40E-04	1.40E-04
Dose Conv. Factor (mrem/pCi)[1]	1.18E-01	1.33E-01	1.23E-01
Dose/Railcar/Nuclide (mrem)	2.79E-03	1.12E-03	5.17E-05
No. Railcars per year	3	3	3
Dose/Nuclide (mrem)	8.38E-03	3.35E-03	1.55E-04
Total Dose for Project	1.19E-02mrem		

4.1.3. Truck Surveyor

Three trucks are needed to transfer one gondola of material, for a total of nine truck loads for the project. Prior to departure from the RTF, each truck and trailer are surveyed. The surveyor stands approximately one meter from the vehicle, where the dose rate is 0.0328 mrem per hour (Attachment 4). The surveys take approximately five minutes per vehicle and will be assigned to one worker, resulting in a total project dose of 0.0245 mrem.

4.1.4. Truck Driver

The trip to the disposal site takes 45 minutes. The calculated dose in the driver's position is 3.28×10^{-2} mrem per hour (Attachment 4), resulting in a total project dose of 0.221 mrem.

4.1.5. Cell Operator

Cell operators use heavy equipment to spread and compact the material once it is deposited in the cell. The dose rate for these workers is 2.59×10^{-2} mrem per hour (Attachment 5). The contents of one gondola will take approximately 15 minutes to spread and compact. All cell work will be assigned to one cell operator, resulting in a total project dose of 1.94×10^{-2} mrem.

The internal dose to the cell worker is not calculated because it is expected to be less than that of the excavator operator because the cell worker is exposed to dust over a shorter period of time, wind in the cell quickly removes much of the dust, and respirators are worn by all personnel in the disposal cell.

4.2. Dose to Public During Transport

External dose, as calculated in section 4.1, is anticipated to be less than one millirem for the MEI and is expected to be much less for any member of the general public. Despite the low concentrations of radionuclides and the extremely low dose expected for the MEI, transportation arrangements are planned to further minimize potential for dose to members of the general public. The material will be transported to the USEI facility by

rail in enclosed packages, precluding potential for uptake and internal dose to members of the general public. Rail transport is also reasonably expected to result in a lower dose to the public than highway transport.

4.3. Post Closure Dose to the General Public

ResRad was used to estimate the post closure dose due to disposal of the APG material (Attachment 6). US Ecology's permit requires that it be demonstrated that no per person will receive a dose exceeding 15 millirem for 1,000 years after closure of the facility. The maximum dose for this time period, 1.41×10^{-7} mrem, occurs at year 1,000. This model fulfills the requirement that the dose from the disposal of waste under 10 CFR 20.2002 will not cause any member of the public to receive a dose in excess of "a few millirem".

Attachment 1

Disposal Site Characteristics

GENERAL DESCRIPTION (IDAPA 58.01.05.012 & 40 CFR 270.14(B)(1))

US Ecology Idaho (USEI) owns and operates an approximately 160-acre RCRA Subtitle C Treatment, Storage and Disposal Facility (TSDF). This facility is located at the end of Lemley Road approximately 10½ miles west of the town of Grand View, Owyhee County, Idaho.

The site had previously operated as a waste storage and landfill disposal facility by a different owner from 1973 to 1981. Current activities at this facility include storage, treatment, and disposal at an on-site landfill(s) of industrial, toxic and hazardous wastes and certain low activity radioactive materials . USEI serves multiple industries including chemical, manufacturing, steel, petroleum and pharmaceutical industries as well as the federal government. Wastes are generated on-site from various site activities. These activities include leachate generation from landfills, liquids collected from various containment areas/systems and other waste streams generated during the operation of various on-site waste management units including the Stabilization Facility, Stabilization Building, Containment Building, various container management units, landfill(s), surface impoundments, and other existing hazardous waste management units and support facilities.

The active disposal portion of the facility is comprised of two (2) active landfill disposal cells, designated as Cells 14 and 15 and four (4) surface impoundment disposal units, designated as the Evaporation Pond and Collection Pond #'s 1, 2 and 3. Additionally, there are two landfill disposal units, Trenches 10 and 11, which completed a five year evaporative cap performance demonstration which began during the year 2000 and are now closed. Former Trench 5 has also been closed using a standard RCRA facility cap.

Historically, the site was primarily used for management of non-hazardous and hazardous wastes, and PCB under a separate TSCA permit. Throughout the 1970's, the facility was operated by Wes-Con, Inc. as an industrial waste landfill and received wastes for disposal in the abandoned on-site Titan missile silos and then active chemical waste landfill. In 1980 Wes-Con, Inc. (Now operated by USEI) obtained interim status under RCRA for management of hazardous wastes, including treatment, storage and disposal of approved hazardous wastes. USEI received a "Hazardous Waste Treatment, Storage and Disposal Facility Permit" from US EPA and IDEQ on December 15, 1988.

The Grand View, Idaho waste management facility has been in operation since 1973. Prior to the purchase of the facility by USEI, portions of the Titan missile silo complex were used for waste disposal in addition to the on-site trenches. Because of the timing of the USEI purchase of the site and the promulgation of current environmental regulations, the only information available regarding past disposal practices is the records that were maintained at the facility by previous owners and information that USEI has been able to obtain from past owners and long-term employees at the site.

In recent years, the facility has accepted large volumes of low activity radioactive material from the federal government's Formerly Utilized Site Remedial Action Program (FUSRAP), other federal agencies, and private entities including NRC and Agreement State licensees. These materials include naturally occurring and accelerator produced radioactive material in low concentrations, as well as source and byproduct material generally or specifically exempted from regulation under the Atomic Energy Act for disposal purposes.

General Hydrogeologic Information

Regional Setting

Introduction

The following is a summary of the Physiographic Setting and Regional Hydrogeology of USEI Site B presented in the 1986 Site Characterization Report (CH2M HILL, February 1986). This information has been assembled pursuant to IDAPA 58.01.05.012 (40 CFR 270.14(c)(2)).

Physiography

USEI Site B is situated in the western portion of a 20,000-square-mile physiographic unit known as the Snake River Plain. The plain extends from the vicinity of Ashton, Idaho, to north of Ontario, Oregon. The Snake River Plain is approximately 350 miles in length and varies in width from 25 to 75 miles. USEI Site B lies within the lowland area of the Owyhee subunit of the Snake River Plain at an elevation of between 2,525 ft. and 2,635 ft.

The Snake River, which flows to the northwest, lies approximately three (3) miles east of the site and is the most prominent water resource of the area. The site is approximately 250 ft. higher than the Snake River flood plain, which locally extends outward up to one mile along either side of the river. Castle Creek, a perennial stream that flows northward to the Snake River, lies approximately one mile west of Site B. Cloudburst Wash, a small ephemeral (intermittent) stream, lies about two (2) miles to the east of Site B and also empties into the Snake River. The facility straddles the Castle Creek and Cloudburst Wash drainage basins. However, since the facility contains all runoff from active areas, it does not contribute runoff to either drainage. The area is characterized by badlands-type topography and exhibits varied relief. Major topographic features of the area include several prominent buttes, remnant basaltic cinder cones, and canyons cut by the Snake River. Vegetation in the area is typical of a semiarid environment. The lowland area within which the site is located is inhabited by low brush and grasses, including sagebrush, rabbit brush, wheat grass, and cheat grass. Land use in the area consists of undeveloped rangeland and some limited irrigated agriculture. Irrigation water in the area is derived from the Snake River, Castle Creek, and from the deep, regionally extensive, geothermal groundwater system. The area is sparsely populated with isolated farms and ranches being the dominant habitation.

Climate

The semiarid western portion of the Snake River Plain has one of the highest annual average temperatures in the state. For a 64-year period (1933 to 1996) at the Grand View US Weather Bureau Station, located ten (10) miles east of the site, the average temperature was 52.2 degrees Fahrenheit (EarthInfo, Inc., 1997). The range in temperature during the winter months of December through February was -1 degree Fahrenheit to 58 degrees Fahrenheit. From March to November, the temperatures ranged from 12 degrees Fahrenheit to 101 degrees Fahrenheit.

The site is influenced by prevailing westerly maritime winds via the Columbia River and Snake River valleys; consequently, most precipitation falls during the winter. Over the same 64-year period at the Grand View US Weather Bureau Station, the average annual total precipitation was 7.1 inches. The precipitation in this area is evenly distributed from November through June, with only a minor amount falling during the summer, usually associated with isolated thunderstorms. The mean annual pan evaporation for the Grand View area is approximately 53 inches (US Weather Bureau, 1959).

Regional Well Inventory

A records search of the well log files at the Idaho Department of Water Resources (IDWR) in March 2003 turned up 26 logs for wells installed within a 3-mile radius of Section 19. There were no new wells drilled in this search area between the 1998 and current submittals of this permit application document. Note that the test well LP-40 discussed previously was not included in this summary.

Figure E-6 shows the approximate location of the wells based on the location information included on the log. Included in Figure E-6 is a table showing the well depth, date drilled, and stated use. Four (4) of the well logs were for USEI monitoring wells and there were two duplicate logs filed for the same well (well No. 13). The plugged and abandoned water well exploratory well drilled west of Site B by USEI to a depth of 800 ft. is shown as well No. 18 and the plugged and abandoned deep artesian well drilled by the US Air Force in 1958 is shown as well No. 14. Appendix E.1 provides copies of the well logs as filed with IDWR.

There are five existing wells in the immediate vicinity of Site B that are of interest because they may be hydraulically downgradient of the facility. Four of these wells, Nos. 12, 13, 21, and 22, are domestic wells that probably cannot be impacted by shallow groundwater at Site B because they are deep artesian wells (greater than 600 ft. deep) and either flow at the surface or have very shallow static water levels (less than 12 ft. bgs). The fifth well, No. 23, was drilled for stock watering and draws water from sands and gravels with a reported yield of over 50 gallons per minute. The location provided on the Well Drillers Report places this well about 1.5 miles west of the Snake River (one mile east of Site B) in an area where saturated gravel deposits are not expected. However, in a telephone interview with the owner of the well, the actual location of the well is approximately ½ mile west of the Snake River and 50 ft. northwest of the Grand View Irrigation Canal. This places the well approximately 2.0 miles east of Site B in the NW ¼ NE ¼ of Section 21 as shown in Figure E-6, not NW ¼ NE ¼ of Section 20 as stated on the Well Driller's Report. Based on well No. 23's proximity to the Snake River and the irrigation canal, and the lithology provided in the Well Drillers Report, this well apparently draws water from saturated gravels that are recharged by the Snake River and possibly the canal. Thus, well No. 24 will not likely be impacted by shallow groundwater at Site B.

Regional Geology

Several investigators have been active in the delineation of the geology of the area at the regional scale. Malde and Powers (1962), Littleton and Crosthwaite (1957), Anderson (1965), and Ralston and Chapman (1969) have all contributed to establishing the geology of southwestern Idaho, including the general area of Site B. The information from these researchers is summarized and synthesized in this section to provide an overview of the geologic setting. The intent of this section is not to provide a definitive and detailed examination of the geology of the area, but only to place the site in the regional geologic framework as a basis for the detailed site geology and hydrogeology.

Stratigraphy

The regional stratigraphy of the area is dominated by the Idaho Group of Miocene to Pleistocene Age. This depositional sequence consists of up to 5,000 ft. of sedimentary and interspersed basaltic lava deposits that accumulated in the Snake River Plain over a basement of thick, older silicic volcanic rocks, primarily rhyolites.

The sedimentary deposits of the Idaho Group were laid down under three distinct episodes of lava damming (and subsequent dam breaking) of the ancestral Snake River. These episodes resulted in the formation of large lakes across the region. Fine-grained (silt and clay) lacustrine (lake bed) deposits are frequently intertongued with coarser-grained (silt and sand) of fluvial (river) and flood plain deposits throughout the area. These discontinuous and interbedded sand, silt, and clay beds form complex stratigraphic relationships on a regional scale. As a general rule, the deposits are unconsolidated except for some minor sandstone and freshwater limestone and localized, discontinuous, basaltic lava beds. Generally, however, the lacustrine deposits predominate and form the most contiguous sedimentary beds across the Snake River Plain and the Site B area. The lacustrine and fluvial sediments of the Glenns Ferry Formation of the Idaho Group are the primary strata of concern at Site B.

The several-hundred-foot-thick Snake River Basalt forms a cap rock over the Idaho Group sediments throughout much of the area and is the youngest formation in the regional sequence. Locally, the Snake River has eroded through the Snake River Basalt and into the underlying Idaho Group sediments. The Idaho Group sediments north of the Snake River, north of Site B, are capped by the resistant Snake River Basalt that forms steep cliffs adjacent to the river. The Idaho Group sediments south of the river (and within the vicinity of Site B) generally lack the protective basalt cap and have been eroded, forming the badlands topography characteristic of the area.

Structure

The Snake River Plain appears to be a downdrop fault-block basin, or graben, bounded by normal faults to the northeast and the southwest. Subsidence in the center of the basin was greatest and, consequently, the Idaho Group sediments are thickest near the center. The regional dips (angle from horizontal that the strata slopes) of the Idaho Group sediments range from near horizontal near the center of the basin to a maximum of about ten (10) degrees toward the margins of the basin. In the vicinity of Site B, regional dips of 2 to 4 degrees have been reported, with strike directions (perpendicular to direction of dip) approximately north 70 degrees west.

As a result of the structural attitude (dip) of the Idaho Group strata, older units tend to be exposed at a considerable distance south of the Snake River, with younger units exposed progressively nearer the river. Faults are apparent throughout the region because of differential settlement of sedimentary beds and movements along the principal regional faults that border the Snake River Plain. Minor faults locally cut older units of the Idaho Group; the younger units, however, are generally unaffected since they were deposited after the faulting occurred. The faults typically parallel the plain; faulting transverse to the plain is not common.

Local Geology

This section focuses on the characteristics of the Idaho Group sediments present in the vicinity of Site B.

Local Stratigraphy

In ascending order (deepest and oldest first), the localized formations are the Poison Creek (600+ feet thick); the Banbury Basalt (200+ feet thick); the Chalk Hills (200+ feet thick); the Glenns Ferry (1,500+ feet thick); and the Bruneau (0 to 100+ feet thick). A detailed stratigraphic column prepared from the driller's log for the artesian well drilled in 1958 at Site B illustrates the stratigraphic sequence at Site B.

The Chalk Hills and Poison Creek Formations represent two individual lacustrine periods affecting the central and western portions, respectively, of the Snake River Plain. In some reports, particularly in many of the older geologic reports concerning the area and on numerous deep-drilling logs, the Poison Creek Formation is shown as occurring stratigraphically above the Banbury Basalt. This is due to lithologic similarities between the Chalk Hills and Poison Creek Formations and the volcanism responsible for the deposition of Banbury Basalt into the lacustrine environments present.

The Glenns Ferry and Bruneau Formations are of prime interest to the site; the Glenns Ferry is the unit where groundwater is first encountered and the Bruneau forms the uppermost geologic unit beneath Site B. Together, these two units form a composite thickness of about 1,600 ft. The deeper Banbury Basalt and Poison Creek Formations are of secondary importance to site-scale hydrogeology only because of their depth. However, these formations provide a regional source of deep-flowing artesian groundwater, generally obtained from depths in excess of 2,000 ft. to 3,000 ft. beneath Site B. The artesian aquifer discussion is provided below. Because of the importance of the Bruneau and Glenns Ferry Formations to the Site B characterization, these units are discussed in detail below.

Glenns Ferry Formation

The Glenns Ferry Formation is of interest since the uppermost zone of saturation beneath Site B exists within the upper portions of this formation. Although the Glenns Ferry Formation is approximately 1,500 ft. thick in the site area, the following discussion focuses on roughly the upper 800 ft. The Glenns Ferry Formation was deposited in the area under three ancestral depositional environments: lacustrine, fluvial, and flood plain. The three stratigraphic facies, each representing a different energy of deposition that is reflected in the typical grain size of the sediments, differ from one another in lithologic composition and areal persistence and tend to grade vertically from one facies to the next. The overall sedimentary pattern in the upper few hundred feet of the Glenns Ferry Formation is of upward coarsening, reflecting the climate and drainage pattern changes that ultimately led to the complete disappearance of the Glenns Ferry lake.

For discussion purposes, the Glenns Ferry Formation has been divided into two units. The lower unit of the Glenns Ferry Formation consists of a lower lacustrine facies that upwardly becomes increasingly interbedded with fine-grained fluvial sands. The upper unit of the Glenns Ferry Formation consists of predominantly fluvial sands grading vertically into flood plain facies. The lacustrine facies is the most extensive and areally persistent sedimentary body in the Glenns Ferry Formation. Because of the structural dip of the beds in the Snake River Plain, all three facies are exposed at the land surface within the general area.

The extensive lacustrine facies consists of a thick-bedded, silty clay to clayey silt that grades with depth into a massive clay. Within the lacustrine facies are discrete intervals of thin lenses of very fine, tuffaceous sand interbedded with thicker, clayey, silt beds. These intervals represent periods of unstable lake margins. As water levels fluctuated, lake margin and fluvial sands were deposited farther into the lake. When the lake levels rose again, the sand lenses were covered with additional fine-grained lacustrine sediments. Where these sand zones are saturated, they represent the water-bearing portions of the lacustrine facies of the Glenns Ferry Formation. The

water-bearing zones being monitored at Site B consist of two groups of these thin sand beds sand beds interbedded in the lacustrine sediments. At some exposures, the thick-bedded silt unit is overlain by several feet of very fine sand, alternately interbedded with additional silt. In many exposures, the fine sands are cross-bedded and show the presence of ripple marks. The fine sands generally denote the regional top of the lacustrine facies.

A less extensive fluvial facies overlies the lacustrine deposits, and generally consists of a fine- to medium-grained sand reaching a thickness of about 60 ft. Frequently, a 1" thick, tuffaceous, fine-grained sandstone is found at the top of the fluvial sand. Some cross-bedding is evident in the fluvial facies and, on a local scale, the sand unit intertongues laterally with the lacustrine facies.

The flood plain facies, where present, overlies the fluvial facies and denotes the top of the Glenns Ferry Formation; it consists of an interbedded sequence of clay, silt, and sand. sand beds. Individual beds vary in thickness from about two (2) to four ft. (4') in the general area and laterally persist for several hundred feet. The flood plain sediments are areally discontinuous, however, and range from being absent to about 200 ft. thick. Plant fragments and other detritus are evident in the flood plain facies. Texturally, the flood plain deposits appear banded (that is, possessing thin, laminae-like alternating beds) compared to the more homogeneous underlying fluvial and overlying Bruneau Formation sediments.

Bruneau Formation

The Bruneau Formation consists of a variety of lithologic types ranging from unconsolidated lake deposits that contain basalt flows and tuff beds to high energy river gravels. In the vicinity of Site B, the formation is approximately 100 ft. thick, but the thickness varies greatly and the formation is absent in some locations. The Bruneau Formation is generally more coarse-grained than the underlying Glenns Ferry Formation and has been divided regionally into a basal gravel unit (approximately 40 ft. thick), an overlying lower unit (approximately 70 ft. thick), followed by an upper unit (approximately 20 ft. thick). A 10- to 15-foot tuff layer separates the upper and lower units.

The basal gravel unit is composed of rounded pebbles, cobbles, and coarse-grained, cross-bedded sand lenses. The origin of the unit is interpreted as a river and beach deposits of ancestral Lake Bruneau. The lower unit, which overlies the basal gravel, consists of a thin, basaltic, cinder bed, an intervening mottled clay, and a fine-grained tuffaceous sand. The upper unit of the Bruneau is lithologically similar to the lower unit, but regionally occurs above the 10- to 15-foot-thick tuff layer. Locally, the thicknesses and lithologic characteristics of the Bruneau units can vary considerably. Only the basal gravel unit of the Bruneau Formation is present at USEI Site B.

Minor recent and Pleistocene surficial deposits are also intermittently present in the local area and consist of Snake River terrace gravels, colluvium, and stream alluvium. The stream alluvium exists along the margins of permanent drainages, and the colluvium consists of random slope debris. These minor deposits are difficult to distinguish from the unconsolidated coarse-grained Bruneau Formation deposits on a local scale. For purposes of classification in this report, all surficial deposits in the vicinity of Site B are considered to be part of the Bruneau Formation, even though they may be of more recent geologic origin.

Regional Hydrogeology

The groundwater resources of the area have been examined at the regional scale by several investigators. Mundorff, Crosthwaite, and Kilburn (1964) prepared a report on the occurrence of groundwater within the entire Snake River Plain. Ralston and Chapman (1969) investigated the groundwater resources of northern Owyhee County, and Young and Lewis (1982) examined the hydrology of deep thermal groundwater in southwestern Idaho. Several other groundwater availability and geothermal resource studies have been performed in the region, most notably by

Brott, Blackwell, and Mitchell (1978) and Young, Lewis, and Bracken (1979). On the basis of these principal research studies, an overview of the groundwater resources of the region is presented in the following sections.

Principal Groundwater Systems

The regional studies indicate that three groundwater systems are present in the area of Site B. These systems are as follows:

1. A deep groundwater system found primarily within the silicic volcanics, Banbury Basalt and the Poison Creek Formation. Groundwater is found at depths ranging from 600 to more than 3,000 ft. in this system. Water in this system is under considerable artesian pressure and geothermally heated. Many wells tapping the aquifer are capable of flowing at the land surface. Several flowing geothermal wells in the Castle Creek drainage are used for irrigation and contribute to the general water resources available in that area. In the 3,000-foot-deep water supply well drilled by the US Air Force (USAF) at Site B, the first significant water was encountered at 2,980 ft. The USAF test well flowed at over 300 gpm at a temperature of 170 degrees Fahrenheit. The USAF geothermal well was plugged and abandoned in 1986 by USEI (CH2M HILL, June 1986). The geothermal aquifer system, herein referred to as the deep artesian aquifer, is the most important groundwater resource in the area. Recharge to the deep artesian system in the area is believed to originate in the Owyhee Mountains, where precipitation exceeds 50" annually.
2. A local veneer of saturated alluvium exists along Castle Creek. The alluvium and the creek are reported to be hydraulically connected. Some shallow domestic wells have been installed in the alluvium, generally to depths not exceeding 50 ft. Most of this alluvial system development occurs approximately eight (8) miles southwest and upstream of Site B (Ralston and Chapman, 1969). As Castle Creek flows northeastward from this area to the Snake River, it passes to within one (1) mile of Site B. It can reasonably be assumed that a veneer of saturated alluvium exists along Castle Creek in this downstream area as well. Recharge to this system is primarily by surface water runoff derived locally from precipitation and from the Owyhee Mountains.
3. Groundwater is found within the fine-grained sand beds and interbedded silts of the upper parts of the Glenns Ferry Formation at depths on the order of 140 to 350 ft. below ground level. Well yields and water quality in this system vary greatly. The Glenns Ferry Formation provides water to scattered low-yielding stock watering and domestic wells in the general vicinity of the site. In the area of the town of Oreana, seven (7) miles southwest of Site B, numerous wells provide groundwater for small irrigation and domestic uses from the Glenns Ferry Formation (Ralston and Chapman, 1969). In this area, local leakage from the Catherine Creek alluvial system probably contributes significantly to the recharge and well yields from the Glenns Ferry Formation. Recharge to the shallow Glenns Ferry aquifer comes from direct precipitation on exposed permeable beds, infiltration where the formation is exposed to surface water sources, and by vertical leakage from underlying artesian zones on a broad regional scale. The potential for recharge to the Glenns Ferry Formation from Site B is minimal because all site runoff is directed to lined collection ponds.

The water-bearing intervals being monitored at USEI Site B are in the upper portion of the shallow Glenns Ferry Formation. At Site B, however, the formation is not very permeable and most wells yield less than 0.5 gallon per minute. The shallow Glenns Ferry aquifer as it exists at Site B is not a true aquifer in the context of water resources because of low yield. The detailed characterization of the water-bearing properties and geochemical properties of the shallow Glenns Ferry system beneath Site B is provided in Section E.3.c.

Regional Flow Characteristics

Deep Artesian System

Groundwater in the deep artesian system generally moves from the mountains toward the Snake River, which is the regional hydrologic base level and therefore the likely discharge point for at least a portion of the groundwater in the deep artesian system. The observed northeast direction of flow in this system is consistent with the generalized orientation of the landscape, the trend of regional surface water drainages, and the regional trend of the Owyhee Mountains relative to the position of the Snake River. Strong upward gradients exist between the deep artesian system and shallower systems over most of the area. Where intervening confining strata are thin, more permeable, or breached by faults or wells, the deep artesian system also has a vertical flow pattern and contributes water to shallower systems. This is particularly noted to be occurring in the Castle Creek drainage area southwest of Site B where uncased or uncontrolled artesian wells are contributing to the base flow of Castle Creek and therefore also to the localized alluvial groundwater system in communication with the creek.

Shallow Glenns Ferry Groundwater

Because of the remoteness and sparsely populated nature of the area, coupled with the limited and sporadic groundwater resource potential of the Glenns Ferry Formation, there is insufficient information available to make definitive regional interpretation of flow directions and rates for the Shallow Glenns Ferry system. In general, the shallow groundwater system flows toward, and probably discharges into, the Snake River. However, smaller scale flow directions are expected to be highly variable because of localized points of recharge from surface waters and vertical leakage from the deeper system, and from localized discharge points such as wells and natural drainages. Locally, southeasterly, northeasterly, and easterly flow directions have been identified in the shallow Glenns Ferry groundwater system at Site B. All of these flow directions are generally toward the Snake River where it either discharges directly or enters the local alluvial groundwater system along the Snake River.

Relationship of the Deep Artesian System to Site B

A deep artesian well was drilled on Site B by the USAF in 1958 as a water supply well (Shannon and Wilson, 1959). The artesian well was plugged and abandoned by USEI in 1986 (CH2M HILL, June 1986). The well abandonment was completed methodically and thoroughly using oil-field cementing techniques and cementing service contractors. There have been no data suggesting any vertical leakage from the deep artesian well, either before or after plugging. Although the well was abandoned, because of the location of the artesian well in the center of Site B and because much of the understanding of the deeper geologic formations beneath Site B came from the artesian well records, it is appropriate to preserve the documentation of the well in this application. Pertinent information regarding the deep artesian well is summarized below. In addition, important information on the nature of the deep regional flow system can be gained by a review of the characteristics of this well.

The geologic section beneath Site B is dominated by blue clays and shales. The aquifers of interest at Site B occupy a very small portion of the uppermost geologic formation.

The shut-in pressure of 70 psi at the wellhead reported in 1958 was confirmed in 1986 prior to well abandonment. This value represents a head approximately 160 ft. above the land surface at Site B and approximately 335 ft. above the heads observed in the shallow Glenns Ferry Formation at Site B. These data confirm that a strong upward hydraulic gradient exists between the deep artesian system and the shallow Glenns Ferry system immediately beneath Site B. The drillers log of the artesian well did not report any major aquifer zones between the shallow Glenns Ferry system and the deep artesian zone, spanning an interval of several thousand feet. This

was confirmed at the 800-foot-deep exploratory borehole that was drilled by USEI as an exploratory water well west of the site in 1984. Drilling logs from this well indicate that strata below 300 ft. are predominantly blue clay and shale, which is consistent with the drillers log recorded for the artesian well. This hydrogeologic setting and head relationship indicates it is not possible for waste constituents from the site to migrate downward to the deep artesian aquifer. Therefore, the shallow water-bearing zones within the Glenns Ferry Formation are the primary "aquifers" of interest in this Document, and the remainder of this section is devoted to describing, in detail, the characteristics of these two groundwater systems.

Site Hydrogeologic Characteristics

Introduction

In this section, the results of the site-specific hydrogeologic investigations conducted at Site B are presented in detail. The goal of the hydrogeologic investigations to date has been to characterize the geologic and hydrogeologic properties of the uppermost aquifer and any aquifer hydraulically connected to it. At Site B this involved a detailed investigation of the upper 400 ft. of unconsolidated sediments beneath the site. This information has been assembled pursuant to IDAPA 58.01.05.012 (40 CFR 270.14(c)(2)).

The uppermost water-bearing zone beneath Site B actually consists of two discrete, low-yielding, finely bedded sand zones that are separated by a 20- to 30-foot-thick confining clay bed. Under the nomenclature used in this report, these two zones are called the Upper and Lower Aquifers, respectively. Both zones occur in the Glenns Ferry Formation.

An unsaturated zone, ranging from 140 ft. to 200 ft. in thickness, overlies the uppermost aquifer and consists of silts and clays of the Glenns Ferry Formation overlain by coarser-grained sands, silty sands, dense clay beds, and sandy gravels of the Bruneau Formation.

The following sections develop in detail the generalized concepts presented above. A description of the site-specific subsurface geology is provided, followed by a detailed examination of the hydraulic and hydrochemical aspects of the uppermost aquifer system. The system is complex as a result of subtle stratigraphic differences within the Glenns Ferry Formation and the effect of dipping strata. To orient the reader, an overview of the uppermost aquifer concept is presented in Section E.3.c.(3), following the site-specific geology discussion below.

Site Geology

Formation Identification

Quaternary and Tertiary sediments of the Bruneau and Glenns Ferry Formations directly underlie the site. The veneer of surficial gravels present over much of the site is interpreted as basal conglomerate of the Pleistocene-Age Bruneau Formation (Benfer, 1984). Fine-grained sediments of the Pliocene- to Pleistocene-Age Glenns Ferry Formation underlie the Bruneau Formation gravels. The Glenns Ferry then persists throughout the remaining depth of the investigation.

Stratigraphy

Throughout the remainder of this section, references will be made to the observed thicknesses of various geologic strata penetrated. Qualitative descriptive terms have been numerically classified according to Krumbein and Sloss (1963).

Geologic and geophysical logs have been used to construct several geologic cross sections depicting the stratigraphy at USEI Site B. Previous reports and submittals on file with DEQ contain these large cross section plates which are not reproduced in this application.

With two minor exceptions, the basal gravels of the Bruneau overlie the entire site. The exceptions are where the basal gravels are thinly covered by recent soil or ash layers, or where they have been removed by site construction activities. Typically, the gravels are present only to about 50 ft. bgs but were found to extend to approximately 100 ft. in the southeast and northeast corners of the site.

The Glenns Ferry is present beneath the Bruneau gravels and represents sedimentary deposition in a large lake system with peripheral and capping fluvial and flood plain facies (Smith et al., 1982). As such, the Glenns Ferry consists of lake-margin deposits containing fluvial deposits (stream and beach shoreline sands and near-shore silts). Underlying the fluvial deposits are the lacustrine facies (lake deposits) of the Glenns Ferry. The entire sequence exhibits upward coarsening (finer grained with depth). As such, this represents a period of lake regression (a lowering of the water level in the ancient lake [Selley, 1972]). Lithologic and facies contacts are gradual and are controlled by the predominance of grain size and bedding.

The upper (fluvial) sequence of the Glenns Ferry Formation contains very thick-bedded (greater than ten (10) ft.) fine sands and silts containing a few clay seams. Typically, the sands are well sorted, moderately indurated, and thickly bedded. Calcite cementing predominates. The clay seams distributed within the sand are generally thin-bedded (several inches to one (1) ft. thick) and are plastic (soft and moldable). Near the base of the sequence, thin-bedded carbonates (limestone) occur. These sedimentary sequences are representative of lake margin environments (Selley, 1972). This section persists to approximately 130 ft. in depth at the center of the site, where the finer grain size and thinner bedding exists. Where the predominance of finer grain size and thinner bedding exists, this facies change is interpreted as the bottom contact of the fluvial facies overlying lacustrine sediments of the Glenns Ferry Formation.

The lacustrine facies consists of thick-bedded clays and silts containing very thin beds of silt, sand (generally less than one ft. (1) thick), and sand-silt lamina. The sequence expresses cyclic sedimentation for the depth investigated. The formation transcends through thick-bedded sequences of clay and silts containing discrete, thinly bedded sands (one ft. (1) thick or less) and reflects deposition representative of a lacustrine environment as the lake waters rose and fell. The sands and silts (linear and lense-like in form) represent near-shore and shoreline deposits. Portions of this sequence are deltaic in nature and contain abundant plant debris. Sheet-like clay and finer silts are representative of offshore and deeper lacustrine deposition.

The first sequence of shoreline and near-shore deposits underlying the fluvial facies occurs at an approximate depth of 160 ft. at the center of the site. In the northwest portion of the site, the sequence contains numerous thin-bedded silty sands and lamina that are separated by thin- to thick-bedded silts and clays. These sand beds appear to pinch and thin toward the south and east, forming thickly bedded clay and silt in those directions. Although a continuous zone exists, individual sand beds appear discontinuous across the site. This may indicate that the source of the sands was from the northwest, where increased bedding and coarser grain sizes would be expected. This may also be a result of a lateral facies change, such as a transition to a flood plain or deltaic sequence, occurring within the northern portion of the site, or may represent younger deposition upon paleo-erosional surfaces. It is this zone of thin, discontinuous, and laterally variable sands and silts that represents the Upper Aquifer. Within the upper portion of the sequence, the unit changes color from brown to gray, which may represent a change from oxidizing to reducing conditions at the time of deposition.

These near-shore deposits transcend downward into offshore (deep lake) deposits consisting of thickly bedded clay containing silt. This clay unit is approximately 20 ft. thick at the center of the site, extending to a depth of approximately 230 ft. This zone thickens from approximately 20 ft.

thick in the northwest portion of the site to more than 30 ft. thick in the southeast portion of the site. This unit is the confining bed separating the Upper and Lower Aquifers.

This offshore deposit transcends into another shoreline and near-shore sequence, generally comprising thick-bedded silt and thin-bedded clay that contains thin-bedded sands and sand lamina. This zone (the Lower Aquifer) is continuous across the site, although individual sand beds gradually thin and pinch out. This unit extends to a depth of approximately 250 ft., where again, deposition transcends into deeper offshore deposits of thick-bedded clay and fine silt, which provide the basal confinement of the Lower Aquifer. It appears from the limited information and from the deep borings that this facies again transcends into another sequence of near-shore sands and silts at approximately 290 ft. in depth. These sands are very thin-bedded and have not been investigated.

The drilling logs of the deep artesian well onsite and the 800-foot-deep exploratory water well (WWI) west of the site indicate that the strata below 300 ft. are predominantly blue clay and shale to at least 1,770 ft.

Structure

Units of the Glenns Ferry Formation at the site strike north 69 degrees west, and dip approximately 3.5 degrees to the northeast. Gradual differences have been noted within the formation and reflect changes in depositional environment reflective of lacustrine sedimentation and Snake River Plain downwarping. The upper near-shore sequence (i.e., the Upper Aquifer measured at its base) strikes north 70 degrees west and dips 1.8 degrees northeast. The next near-shore sequence (i.e., the Lower Aquifer measured at its center) strikes north 70 degrees west and dips 2.4 degrees northeast, as measured from Coreholes D-32, D-22, and D-21.

No evidence of faulting exists within the depths of the investigation at the site as determined by surface mapping of existing trenches and analysis of geologic cores. Units can be traced across the site using geophysical logs and direct core logs, all of which conform to measured strike and dips. No indications of faulting (such as displacement, associated fracturing, or alteration) have been witnessed throughout the entire geologic section investigated.

Site Hydrostratigraphy

This section will describe in detail the hydrologic and hydrochemical properties of two interbedded sand zones that have been defined as uppermost aquifer(s) beneath the site pursuant to IDAPA 58.01.05.012 (40 CFR 270.14(c)(2)).

Overview

Two low-yielding, water-bearing zones denoted as the Upper and Lower Aquifers have been identified within the shallow Glenns Ferry Formation beneath Site B. Although neither zone would be classified as an aquifer for water resources development because of the definition of the uppermost aquifer in the regulatory context, they represent the uppermost aquifer(s) of concern for groundwater monitoring purposes. The Upper Aquifer at Site B consists of finely bedded, fine, silty sand in 80 ft. to 90 ft. of silt and clay. The top of the Upper Aquifer sequence is a gradational contact with the overlying fluvial facies of the Glenns Ferry Formation. The top of the Upper Aquifer section is 120 to 160 ft. below ground level. A massive clay, 20' to 30 ft. thick, hydraulically separates the Upper Aquifer from another group of fine, silty, and clayey sands referred to as the Lower Aquifer. The top of the Lower Aquifer is 220 ft. to 275 ft. below ground level and the aquifer section is 30 ft. to 40 ft. thick. Because of structural dip, both aquifers slope to the northeast at approximately 2 to 4 degrees.

As a result of the northeasterly structural dip, the Upper Aquifer sands gradually emerge out of the water from north to south across the site. The entire Upper Aquifer becomes unsaturated along a general east-west trend that crosses the south-central portion of the site. South of this emergence, the sands comprising the Upper Aquifer are present but they are above the potentiometric surface and are not saturated. Conversely, the saturated thickness of the Upper Aquifer increases from south to north as more sands become saturated.

The potentiometric surface of the Upper Aquifer varies from 140 ft. to about 200 ft. below ground level. Groundwater in the Upper Aquifer flows into the site all along the northern border, but most enters from the northwest corner. Flow in the Upper Aquifer is to the east and southeast. The permeabilities of the Upper Aquifer are low, and sustained well yields are generally less than 1.0 gpm.

The Lower Aquifer consists of two (2') ft. to nine (9') ft. of thinly bedded, very fine sand and silty sand seams in a 30- to 40-foot-thick section of silts and clays. Most sand beds are found within a 15-foot-thick interval. The Lower Aquifer is saturated beneath the entire site. The permeabilities of the Lower Aquifer are low, and well yields are generally less than 0.5 gpm. Water in the Lower Aquifer is under moderate artesian pressure. Along the northern edge of the site, water levels rise 60 ft. to 80 ft. above the top of the aquifer. Groundwater in the Lower Aquifer flows to the northeast.

Upper Aquifer

The Upper Aquifer sequence consists of thinly bedded sands and sand lamina separated by thin- to thick-bedded silts and clays. The individual sand seams range from less than 18 inchs thick to partings less than 1/16 of an inch thick. Most are between 0.5ft. and 0.1 ft. thick and consist of very fine-grained, silty sand. Lateral continuity of individual sands is difficult to demonstrate, but the aquifer sequence is present across the entire site. The total cumulative thickness of the sand beds changes laterally east and west because of depositional variations.

In the northwest portion of the site, the cumulative thickness of saturated sand beds in the Upper Aquifer ranges from about eight ft. (8) ft. to 36 ft., occurring over approximately 70 ft. of fine- to thick-bedded silts and clays. The individual sand beds thin and pinch-out toward the east and south. Therefore, the Upper Aquifer contains less sands and therefore does not yield as much water to the east and south. The cumulative thickness of bedded sands underlying the water table in the eastern portion of the site is approximately two (2') ft. to 12 ft., occurring over approximately 20 ft. to 50 ft. of fine- to thick-bedded silts and clays.

The bottom of the aquifer sequence is represented by a relatively rapid gradational change from bedded silts and silty clay to the massive silty clay and clay of the underlying confining bed. The bottom of the Upper Aquifer section ranges from 185 ft. to 250 ft. below ground level.

The top of the Upper Aquifer is also a gradational contact. As discussed earlier, the Upper Aquifer is developed in the lacustrine facies of the Glenns Ferry Formation. The contact between the lacustrine and overlying fluvial sediments is a gradational facies change represented by a thinning of beds and dominance of silts and clays from fluvial to lacustrine. The top of the lacustrine facies (top of the Upper Aquifer sequence) ranges from 120 ft. below ground level in the northwest corner to about 160 ft. below ground level in the northeast corner; across the central portion and eastern sides it is 120 ft. to 140 ft. below ground level. Thickness of the sequence ranges from 80 ft. to 90 ft.

The top of the saturated water-bearing portion of the Upper Aquifer is a function of the intersection of the dipping stratigraphic sequence and the potentiometric surface. Because of the dip, the section rises above the potentiometric surface and becomes unsaturated across the southern portion of the site. From south to north, the dip causes progressively more sand seams

to intercept the potentiometric surface and become saturated. Consequently, the saturated thickness of the aquifer increases to the north and the top of saturation is found progressively higher in the geologic section comprising the Upper Aquifer.

Each individual saturated sand seam is probably under confined conditions as a result of the adjacent silt and clay beds. Given the scale of the bedding, it is impossible to isolate individual sand seams to verify this assumption. Taken as a whole, however, there appears to be little evidence of vertical gradient within the Upper Aquifer section, and, therefore, the aquifer is considered to be unconfined.

Intermediate Clay Bed

The inner confining clay between the Upper and Lower Aquifers ranges from 20 ft. to 30 ft. thick across the site. As discussed in the previous section, the top of the inner confining clay is gradational with the silts of the bottom of the Upper Aquifer. A similar transitional contact exists between the bottom of the confining clay and the top of the Lower Aquifer. In both cases, the gradational contact occurs within about five ft. (5). This clay consists of blue-gray, massive to thickly bedded clay. In Corehole D-23, in the northwest corner, there are seven (7) to ten (10) silty sand lamina (less than 1/8" thick) within the 20 ft. thick clay, while along the east side, no sand lamina are found in the entire 20 ft. thick section.

This clay unit is persistent and consistent across the site and hydraulically separates the Upper and Lower Aquifers. This hydraulic separation is evidenced by differences in water level, flow directions, and water chemistry between the Upper and Lower Aquifers. These indicators of hydraulic separation are discussed in more detail in subsequent sections.

Lower Aquifer

The Lower Aquifer is a sand sequence within silts and clays of the Glenns Ferry Formation. Although the persistence and thickness of individual thinly bedded sands varies laterally, the aquifer is present and saturated everywhere beneath the site.

The bedded sands occur within a 30 ft. to 40 ft. thick sequence of thick-bedded silts and clays. The majority of sands occur within a 10 ft. to 15 ft. interval. Coreholes and geophysical logs of borings indicate that the bedded sands pinch and thin toward the west and south, forming very thin-bedded sands and sand lamina less than ¼" thick. Some sands are discontinuous and pinch out. The total cumulative thickness of bedded sands in the western portion of the site is less than four (4) ft.

Along the east side of the site, the individual beds range from sand lamina (less than ¼ inch thick) to one (1) ft. thick bedded sands, the latter consisting of fine- to very fine-grained silty sand. Most of the water is probably being carried in the upper portion of the sequence, where greater sand thickness and persistence exist. The total cumulative thickness of bedded sands in the Lower Aquifer along the eastern side is less than nine (9) ft. The top of the Lower Aquifer section is 205 ft to 275 ft. below ground level, and the bottom is 305 ft. to 250 ft. below ground level. The Lower Aquifer section generally ranges from 30 ft. to 40 ft. thick.

Basal Confining Clay

Underlying the Lower Aquifer is a massive to thickly bedded clay at least 25 ft. thick. This clay was penetrated in only a few borings, and it has not been tested extensively. Visual descriptions indicate it to be massive (does not contain sand lamina) and "fat," having high plasticity. Properties of this clay are expected to be similar to the inner confining clay.

Hydraulic Properties

Introduction

Pursuant to IDAPA 58.01.05.012 (40 CFR 270.14(c)(2)), the hydrogeologic regime at USEI Site B was characterized as part of the initial permit application process (CH2M HILL, February 1986). Subsequent to the issuance of the permit, considerable additional information has been developed on the hydraulic properties of the Upper and Lower Aquifers at Site B. This portion presents a complete reexamination of the hydrologic properties of Site B, using both previously presented information and new information. The objectives of the hydrologic characterization program were to 1) examine the factors that influence the rate and direction of groundwater movement; 2) evaluate overall groundwater availability; 3) evaluate the degree of hydraulic separation of the Upper and Lower Aquifers; and 4) estimate the degree of containment afforded by the clays and other sediments found above, below, and between the aquifers.

Information from the available data were used individually and conjunctively to determine the hydraulic characteristics that define the groundwater flow properties at USEI Site B. The aquifers at Site B consist of finely bedded, fine sand and silt beds in a predominantly silty clay matrix. Because most groundwater flow, and therefore most of the potential contaminant migration, would occur in the sand beds, the ultimate aquifer property being sought from the aquifer test data was the hydraulic conductivity (K) of the sand beds, as opposed to a composite hydraulic conductivity of the entire saturated thickness. Most of the test data available, however, provided either an estimate of the composite K or the transmissivity (T) of the entire saturated thickness of the aquifer.

To estimate the K of the sand beds, the T and/or K values from the aquifer tests were adjusted to reflect only the cumulative thickness of sand beds identified in the wells as estimated from review of the geologic and geophysical logs for each well. Once a K was determined, an estimated groundwater velocity was calculated. Aquifer transmissivities were also used to compare the relative water flux across the site through and between aquifers.

To evaluate the degree of containment afforded by the clays and other sediments found above, below, and between the aquifers, laboratory testing was performed on soils collected from the Upper and Lower Aquifers and the inner and lower confining units. Grain-size analyses and permeability testing were performed on 79 samples of materials from three (3) borings, D-21, D-22, and D-23, at the USEI site. These data were previously reported in CH2M HILL (February 1986) as part of USEI's 1985 Part B permit application.

Results

Usable data are not available on all wells but the large amount of data that was available provides valuable information on both aquifers beneath all portions of the site. Soil hydraulics testing data are presented in CH2M HILL (February 1986).

In Section E.3.b., a transmissivity value was estimated for each pumping and recovery test, slug test, and specific capacity test (Table E-9). Based on the individual tests, an average T value for each well was calculated as shown in Table E-9. The average T value is the average of all aquifer tests performed over the lifespan of the well. Additionally, if an individual test was analyzed by more than one analytical technique and more than one analytical technique provided a valid solution, then all valid solutions are included in the calculation of the average T value.

K values were calculated from the average transmissivity data through the relationship $K = T/b$ where b = the saturated aquifer thickness. Representative thickness values were obtained for 22 of 28 test wells in the Upper Aquifer and 14 of 15 test wells in the Lower Aquifer where successful transmissivity values were obtained. Representative thickness values were determined via an interpretation of subsurface conditions at each respective test site. Information

from all geologic and geophysical logs were used to estimate the actual thickness of sandbeds present within each test interval. This was done to adjust the aquifer test results under the premise that most of the aquifer response during the tests occurs from the sandier aquifer zones, and not the adjacent confining zones, a portion of which is generally included in the test interval. This resulted in a conservative reduction in the thickness values and an associated conservative increase in hydraulic conductivities.

As a supplement to the in situ determination of hydraulic conductivity provided by the aquifer tests, hydraulic conductivity values were also calculated from grain-size distribution information by the Hazen Method. Thirteen (13) of the 79 samples had grain-size analysis performed on the most permeable beds in the Upper and Lower Aquifers. Table E-11 summarizes the calculated hydraulic conductivity estimates for these 13 soil samples based on the Hazen Method. The Hazen Method is one of several predictive equations that relate hydraulic conductivity values to the grain-size distribution of representative aquifer materials. The techniques are approximation methods, but generally provide useful estimates of hydraulic conductivity (Freeze and Cherry, 1979). Todd (1980) cautions that the empirical formulas may not give reliable results because of the difficulty of including all possible variables in porous media. Therefore, field and laboratory methods are preferable as a general rule.

The Hazen Method estimates K through the following relationship (Equation E.3-2):

$K = A\ (d_{10})^2$
where:

K is the hydraulic conductivity, A is a conversion factor (equal to 1.0 when K is reported in cm/sec and grain size in millimeters [mm]), and d_{10} is the grain-size diameter at which ten (10) percent by weight of the particles are finer.

Upper Aquifer

For the Upper Aquifer, transmissivity values were obtained from 28 test wells. Average T values ranged from a low of 0.1 ft^2/day for U-26 to a high of 51.1 ft^2/day for D-18 (abandoned). The mean transmissivity for the Upper Aquifer is 7.0 ft^2/day, based on an average of the average T values. Figure E-12 denotes the average transmissivity values obtained for each Upper Aquifer test site. Figure E-12 also shows the distribution of T values in the Upper Aquifer. In Figure E-12, T values are grouped into ranges of α 0.1 ft^2/day, 0.1 to 2.0 ft^2/day, 2.0 to 5.0 ft^2/day, and > 5.0 ft^2/day. The highest T values of the Upper Aquifer occur beneath the north/northwest portions of the facility and generally decrease toward the south and east.

To understand the significance of these transmissivity values, they can be compared to minimum values required for a domestic water supply. The US Bureau of Reclamation (USBR) has investigated and published the transmissivity values necessary for water supply development purposes (USBR, 1977). Transmissivity values below one (1) ft^2/day are considered infeasible for domestic well purposes, while transmissivity values between one (1) ft^2/day and 10 ft^2/day are considered poor. Fair well potential can be achieved with transmissivity values between 10 and 100 ft^2/day. Thus, the transmissivity values obtained for the test sites are generally in the infeasible to poor well potential range, with only five (5) average T values of the Upper Aquifer test locations falling in the fair range. As shown in Figure E-12, the five higher-yielding wells are located in the north/northwest portion of the Upper Aquifer.

The calculated hydraulic conductivity values derived from the average T for the Upper Aquifer materials range from a minimum of 4.0×10^{-2} ft/day (1.4×10^{-5} cm/sec) at U-26 to a maximum of 4.2 ft/day (1.5×10^{-3} cm/sec) at UP-7. These values are representative of very fine sands and mixtures of sand, silt, and clay, which are reported to have conductivity values ranging from 10^{-3} cm/sec to 10^{-6} cm/sec (Todd, 1980). Consistent results were observed between the geologic

classification of subsurface materials and their calculated conductivity values. From Table E-11 it can be seen that the range of empirically derived hydraulic conductivity values (Hazen Method) in the Upper Aquifer is significantly lower than the range determined with the pump tests. For the Upper Aquifer, empirically derived hydraulic conductivity values ranged from 2.6 x 10^{-2} ft/day (9.0 x 10^{-6} cm/sec) to 0.5 ft/day (1.69 x 10^{-4} cm/sec). The hydraulic conductivity values obtained from the grain-size analyses may include finer-grained materials from the confining zones that are adjacent to the sandier aquifer zones. This could account for the somewhat lower values observed. It is important to note that the hydraulic conductivity values obtained from the grain-size analyses were not used in the computation of groundwater velocities. Rather, they have been included for exemplary purposes and as an additional check on pumping test-derived hydraulic conductivities.

Lower Aquifer

For the Lower Aquifer, transmissivity values were obtained from 15 test wells. Average T values ranged from a low of 0.4 ft^2/day for MW-6 (abandoned) to a high of 3.3 ft^2/day for MW-5 (abandoned). The mean transmissivity for the Lower Aquifer is 1.0 ft^2/day, based on an average of the average T values. T values in the Lower Aquifer are low and do not appear to follow a discernible distribution pattern. Based on the USBR criteria discussed above, the transmissivity values obtained from the Lower Aquifer test sites are in the infeasible to poor well potential range for a domestic water supply.

The calculated hydraulic conductivity of the Lower Upper Aquifer materials range from a minimum of 6.9 x 10^{-2} ft/day (2.4 x 10^{-5} cm/sec) at L-38 to a maximum of 8.3 x 10^{-1} ft/day (2.9 x 10^{-4} cm/sec) at MW-5 (abandoned). Similar to the Upper Aquifer, these values are representative of very fine sands and mixtures of sand, silt, and clay, which are reported to have conductivity values ranging from 10^{-3} cm/sec to 10^{-6} cm/sec.

The range of empirically derived hydraulic conductivity values (Hazen Method) in the Lower Aquifer is lower than the range determined with the pump tests. For the Lower Aquifer, empirically derived hydraulic conductivity values ranged from 2.8 x 10^{-3} ft/day (1.0 x 10^{-6} cm/sec) to 0.6 ft/day (1.96 x 10^{-4} cm/sec). As noted above, the hydraulic conductivity values obtained from the grain-size analyses may include materials from the confining zones that are adjacent to the sandier aquifer zones. This could account for the somewhat lower values observed. It is important to note that the hydraulic conductivity values obtained from the grain-size analyses were not used in the computation of groundwater velocities. Rather, they have been included for exemplary purposes and as an additional check on pumping test-derived hydraulic conductivities.

Intermediate (Inner) and Basal Confining Layers

Soil samples collected from D-21, D-22, and D-23 that represent the inner and basal confining zones are identified in Table E-10. The vertical coefficient of permeability was determined for ten (10) of the confining material samples. The range in vertical permeabilities for the two confining zones was 1.1 x 10^{-4} to 1.4 x 10^{-1} ft/day (4 x 10^{-8} to 5.0 x 10^{-5} cm/sec). The single sample (boring D-22, sample S-31) with the 5.0 x 10^{-5} cm/sec value is probably due to bedding fractures within the clay as noted on the well log (CH2M HILL, February 1986) or may represent a silty or sandy seam in the confining bed. Without including this sample, the vertical conductivity of the confining beds ranges from 5.7 x 10^{-3} ft/day (2 x 10^{-6} cm/sec) to 1.1 x 10^{-4} ft/day (4 x 10^{-8} cm/sec) and the mean value is 2.8 x 10^{-4} ft/day (1 x 10^{-7} cm/sec).

As shown in Table E-10, the moisture content for the soil samples collected from the inner and lower confining zones ranged from 23.0 % to 31.0 % and averaged 28.1 %, and the degree saturation ranged from 89.4 % to 98.7 % and averaged 93.7 %. These data indicate that moisture was present in the confining zones at near-saturated field conditions. According to the field drilling logs, the moisture content within the inner and upper confining zones ranged from dry to moist, supporting the presence of some moisture in the soils in the confining zones. However, the moisture content in soils below 100 ft. may have been affected by water used in rotary drilling.

Groundwater Flow Properties

Water Level and Hydraulic Gradient

Depth to Water Level Measurement Corrections

The results of gyroscopic surveys at piezometers U-26, UP-28, and UP-29 and monitoring well L-28 indicate that UP-28, UP-29, and L-28 significantly deviate from vertical, and U-26 does not significantly deviate from vertical. As a result, the depth to water measurements at UP-28, UP-29, and L-28 have been corrected based on regression analysis.

Based on the corrected depth to water measurements, the water level elevation anomaly indicated on potentiometric surface maps of the Upper Aquifer in the vicinity of UP-28 does not appear to be directly associated with the inclination of the piezometer off of vertical. However, the water level elevation anomaly indicated on potentiometric surface maps of the Lower Aquifer in the vicinity of UP-28 does not appear to be directly associated with the inclination of the piezometer off of vertical.

Potentiometric Data

Groundwater levels at USEI Site B are measured semiannually in the monitoring wells and piezometers included in the permitted Detection and Compliance Monitoring Systems. The period of record for each well varies according to when the individual well was installed. Some of the wells in the groundwater monitoring system were installed as test wells for site characterization prior to USEI receiving the permit. Consequently, they have periods of record extending back to 1984. Most of the active monitoring wells were installed after the Part B permit was issued and, therefore, the effective period of record begins in 1989

The pre-1989 data sets tend to have more scatter than the post-1989 wells for several reasons: 1) insufficient water level re-equilibration time between frequent sampling and testing activities; 2) variable wellhead configurations and therefore various measure points between wells and over time for the same well; and 3) non-standardized equipment. As the new and existing wells were brought into the permitted Detection Monitoring System, wellheads and measuring points were standardized, dedicated water level probes were used and written field procedures and data recording formats were adopted. These measures significantly reduced the data scatter in these records.

Water level data and hydrographs for the pre-1989 period are presented in CH2M HILL (February 1986). Appendix E.6 includes the tabulated data and hydrographs for all 50 wells in the current groundwater monitoring system for the period from April 1989 through April 2001. As discussed in the next section, water levels have been rising at Site B. In 1999 a Rising Groundwater Study was completed (CH2M HILL,1999b). In 2001, as required by DEQ, the rising groundwater was re-evaluated (CH2M Hill 2001). The 2001 re-evaluation report provides updated hydrographs through April 2001. The next scheduled re-evaluation of the rising groundwater at Site B will be completed in Fall 2003. The rising groundwater study is further discussed in the next section.

From April 1989 through the October 1996 sampling event, all water levels were measured with the same water-level probe. Prior to the October 1997 water-level measurements, however, the original probe failed and could not be repaired. Consequently, a new water meter was used for the October 1997 water-level data set. Calibrating the new probe or establishing a measurement offset by collecting comparison water levels from several wells using both probes could not be completed before the old probe failed.

In comparing the October 1996 to October 1997 water levels, many wells exhibited a significant decline in recorded water-level elevations between the two events. Because a correlation could not be established between the two probes, the observed declines in water levels between the successive October water levels are not considered reliable.

Water levels are tabulated after each sampling event and included in the sampling reports contained in the operating record. These reports document the water level data collected between April 2001 and October 2002. The October 2002 water levels are included on Table E-13 and the period of water level record from October 1989 to October 2002 is used in this section to describe the water level trends, potentiometric surfaces, hydraulic gradients, groundwater velocities, and the groundwater flux and water balance for the Upper and Lower Aquifers at Site B.

Water Level Trends

Water levels in the monitoring wells and piezometers at Site B have been generally rising over the period of record. The rate of rise for each well is variable and not consistent between wells or over the period of record for any individual well.

In 1999 a rising groundwater study was completed (CH2M HILL, 1999b). This study examined flow paths, water chemistry and age dating in an effort to determine the source of the rising groundwater. The rising groundwater study determined that the water in the Lower Aquifer water and eastern portions of the Upper Aquifer were of similar ages but that the water in the Upper Aquifer in the extreme northwest corner of the site was much younger. This suggests that the water coming into the site in the Upper Aquifer was being recharged by Castle Creek about one (1) mile to the west. This incoming water is displacing the older water in the Upper Aquifer. The rising hydraulic head in the Upper Aquifer is also affecting the pressure head in the Lower Aquifer, especially where the two aquifers overlap. Because of the potential impacts of rising water levels on groundwater flow rates and directions, monitoring well screen placement and concerns over possible impacts to water quality as the rising groundwater encounters vapors or the missile silos, DEQ requires the rising groundwater trends to be re-evaluated every two years. The first re-evaluation was completed in August 2001 and the next one scheduled for Fall 2003.

The 2001 re-evaluation report used regression analysis to predict future water level elevations based on the assumption that the rising water level trends continue at current rates. In summary, these projections indicate the Upper Aquifer water levels will contact the bottom of the missile silos in 36 to 53 years (year 2039 to 2056), again, assuming past trends continue unchanged into the future. In many wells the hydrographs show an initial steeper trend followed by a distinct flattening trend beginning in about 1993 so these predictions must be used with caution. The re-evaluation report also concluded that rising water would not seriously impact well construction or placement as the groundwater flow directions have not changed.

The maximum change has been an increase of 10.71 ft. in piezometer UP-4 and the minimum rise is 3.35 ft. in piezometer UP-7. In general, water levels in the Upper Aquifer on the east side of the site have risen faster than those on the west side. This has resulted in a gradual decrease in the west-to-east gradients across the site, although groundwater flow paths have not significantly changed. A contour map showing the change in water levels in the Upper Aquifer between October 1989 and October 2002 is provided in Figure E-14.

Water levels in the Lower Aquifer wells have also risen over this same period. The average rise in the Lower Aquifer is 4.7 ft. and the range is from 0.42 ft. in well L-35 to 8.26 ft. in well LP-15. In general the wells with the highest water level change, are overlain by the Upper Aquifer. Since the Lower Aquifer is confined, the water levels in these wells are believed to be responding primarily to the increase in loading from the water level rise in the Upper Aquifer.

Well L-38 in the extreme southwest part of the study area experienced a sudden water level increase of approximately ten ft. (10) in 1993 that is believed to be caused by surface loading of earth materials stockpiled in the vicinity during the excavation of Cell 14. Since 1993, the water level has been gradually declining back to the trend line that existed prior to the "spike." Similar, but smaller, spikes occurred in wells L-35 and LP-14 during this same time. These wells are also near the soil stockpile area. Well L-36, in contrast, experienced a drop of approximately three ft. (3) in the water level during this same time, apparently in response to the decrease in loading as the nearby Cell 14 trench was excavated. Since 1993, the water level in L-36 has been gradually rising back to the trend line that existed before the sudden drop in water levels. Water level changes in the Lower Aquifer have not significantly affected the groundwater flow paths.

Potentiometric Surface

Lower Aquifer.

There has been little change in the direction of groundwater flow over the period between October 1989 and October 2002. Groundwater in the Lower Aquifer moves into the site from the southwest and flows northeasterly across the southern end of the site. The equipotential lines on the figures are equally spaced and trend uniformly northwest-southeast. The consistency of the equipotential lines is also another indication that geologic matrix and hydraulic properties of the Lower Aquifer of the site are uniform across the southern and southwestern portions of the site. This uniform flow field characteristic is consistent with the geologic descriptions and hydraulic property characterization data presented earlier in this section.

The potentiometric surface in the Lower Aquifer changes character radically northeast of Cell 14. Because the piezometers in this area are linearly aligned along the northeastern side of the site (LP-12, LP-13 and LP-15), it is difficult to determine true flow patterns. However, the data suggest that groundwater flow in the Lower Aquifer changes to an easterly direction and that the gradients flatten out in this area.

Geologic coring, hydraulic property testing, and geophysical logging of the Lower Aquifer sediments in this area do not indicate any changes in the geologic framework or hydrogeologic properties that would account for these flow direction changes. The apparent distortion of the consistent northeasterly flow pattern exhibited by the Lower Aquifer to the southwest appears to be coincidental with the southern limit of saturation in the overlying Upper Aquifer. These data indicate the potentiometric head in the Lower Aquifer is influenced by the overlying Upper Aquifer. This influence is believed to be primarily related to hydraulic pressure, as opposed to leakage. The hydraulic communication between the Upper and Lower Aquifer is discussed in more detail below.

Based on the October 2002 potentiometric map, horizontal gradients in the southern part of the Lower Aquifer (that portion not overlain by the Upper Aquifer) range from 0.0110 to 0.0440 ft/ft and average 0.0261. It is not possible to establish a gradient for the Lower Aquifer north of the Cell 14 monitoring wells (where it is overlain by the Upper Aquifer) because of insufficient data points.

Upper Aquifer

Water table maps for the Upper Aquifer for the October 1989 and October 2002 periods are provided in Figures E-16 and E-19. Although, as discussed previously, water levels in the Upper Aquifer wells have risen 3.3 ft. to 10.7 ft. over the 1989 to 2002 time period, the overall pattern of groundwater flow has not changed. Water in the Upper Aquifer flows across the site from northwest to southeast. Water also flows into the site all along the northern boundary. This water flows diagonally across the northeastern corner and exits the site along the eastern boundary.

The additional water level data provided by wells UP-28 and UP-29, installed in 1993 along the west central side of the site, suggests a radical and unexplained gradient change in this area as shown on the October 2002 potentiometric map. The data from these wells indicate that along the west central side of the site, water in the Upper Aquifer is flowing from southwest to northeast, which is almost perpendicular to the predominant flow direction in the Upper Aquifer. However, the groundwater flowing from the area of UP-28 and UP-29 eventually converges upon and joins the rest of the system. Detailed site characterization efforts in this area, including a discussion of the high water levels in wells UP-28 and UP-29, are reported in CH2M HILL (June 1993).

Well UP-28 was drilled into the Lower Aquifer to verify the stratigraphy prior to well construction. Although the Lower part of the borehole was plugged with bentonite grout prior to installing the well, upward leakage of Lower Aquifer water cannot be ruled out. It is unlikely, however, that the high water level at UP-28 represents a mounding effect since the Upper Aquifer sediments should be able to accommodate any minimal leakage past the bentonite seal that could be occurring. There are insignificant chemistry differences between the Lower part of the Upper Aquifer and the Lower Aquifer; therefore, there is not a distinctive chemistry profile that can be used to determine if the high water levels represent leakage up the borehole (see Section E.3.c.(6)). Well UP-29 was not drilled into the Lower Aquifer, yet water levels in this well are also higher than expected. This suggests a natural cause for the elevated heads that cannot be explained by the existing data. At this point, the water levels in well UP-28, and to a lesser extent in UP-29, represent the only deviation in the overall northwest-southeast flow direction in the Upper Aquifer.

The irregular spacing and curved equipotential lines for the Upper Aquifer are an indication of the variable Aquifer hydraulic properties of the Upper Aquifer as described previously in Section E.3.c.(4). There are two hydrologic gradient regimes in the Upper Aquifer, illustrated by the distinct spacing of the equipotential lines in Figure E-19. The western 1/2 of the aquifer displays gradients in the range of 0.0049 to 0.0089 ft/ft. The eastern 1/2 has much steeper gradients that range from 0.0140 to 0.0235 ft/ft. The demarcation between the two gradient regimes appears to extend from slightly west of U-26 on the southern extent of the aquifer to between U-5 and UP-7 on the northern site boundary. The area of low gradients in the north and northwest parts of the site coincides with the areas of high hydraulic conductivity and transmissivity. Aquifer properties and well yields are Lower along the eastern side and southern extent of the aquifer. The pattern of hydraulic gradients illustrated in Figure E-19 mirrors and supports the distribution of aquifer properties.

Groundwater Flux and Velocities

Lower Aquifer

The cluster of sand and silty sand seams comprising the Lower Aquifer occurs over an interval 20 ft. to 40 ft. thick. Recalling that aquifer transmissivity, T, is defined as the hydraulic conductivity times saturated thickness, groundwater flux, or the volume of groundwater moving with time through the Lower Aquifer beneath the southern portion of the site, can be estimated by $Q = T \times I \times \text{width}$, where T = the average aquifer transmissivity, I = the average horizontal gradient, and width is the width of the aquifer parallel to the equipotential lines. The average T for the Lower Aquifer determined in wells around Cell 14 is 1.0 ft/d (Table E-9). The average gradient for the southern portion of the site using the October 2002 water level data is 0.0261 ft/ft as discussed previously. The cross-sectional width of the aquifer beneath Cell 14 is approximately 2,000 ft.. Based on these variables, there is about 57 cubic feet (ft^3) per day or 20,958 ft^3/year of water moving through the entire width and thickness of the Lower Aquifer. To put this flow rate in perspective, a typical household uses 400 gallons per day or 19,600 ft^3/year. Because the cross-sectional area, hydraulic conductivity, and hydraulic gradient in the Lower Aquifer do not change significantly across the site, flux into the site from the west side and flux leaving the site on the east side are approximately equal.

Most groundwater movement and, therefore, contaminant transport, will occur through the sand seams making up the aquifer. Groundwater velocities for the sand seams can be estimated by Velocity = $(K \times I)/n_e$ where K is the hydraulic conductivity, I is the gradient, and n_e is the effective porosity. Effective porosity is defined as that portion of the total porosity through which flow occurs. Effective porosity is almost impossible to determine because of the difficulty in obtaining undisturbed samples. The average porosity of the fine sands in the Upper and Lower Aquifers at Site B was 0.43. Also, as discussed in the 1986 Section E, researchers have concluded that for groundwater flow through granular media, the total porosity can be used in the velocity calculation with little effect. Therefore, velocity calculations for Site B made since 1986 have used the porosity value of 0.43. The K and porosity of the sand beds, as discussed in the Aquifer Properties section, were used in the velocity calculations. Calculated seepage velocities for the Lower Aquifer range from 2.6 ft. to 11.2 ft. per year and average 5.2 ft. per year. Calculated velocities vary with the K and I at each well.

Upper Aquifer

Flux calculations for the Upper Aquifer are more complicated than for the Lower Aquifer because the Upper Aquifer is unconfined, the gradients across the site are highly variable, and the saturated thickness varies from about 70 ft. along the north facility boundary to zero feet across the northern edge of Cell 14 where the last of the aquifer sediments emerge. Consequently, a wedge-shaped, cross-sectional area was used to compute the flux, and separate fluxes were calculated for the west and east sides.

From this exercise, the estimated flux into the site from the west is about 43,122 cubic feet (ft^3) per year and the flux leaving the east side of the site is 5,193 cubic feet (ft^3) per year. The difference between the two values is a net inflow of 37,929 cubic feet (ft^3) per year that must be accounted for. These issues are presented in the Water Balance section (Section E.3.c.(5)(d)), which follows the Upper Aquifer groundwater velocity discussion.

The same approach and assumptions presented earlier for the Lower Aquifer were also used to estimate velocities in the Upper Aquifer sand beds. Calculated seepage velocities for the Upper Aquifer range from 0.2 ft. per year at well U-2 to 81.6 ft. per year at well UP-7. The average for all Upper Aquifer wells is 8.3 ft. per year.

Calculated velocities vary with the K and I at each well. Table E-9 provides the calculated velocity at each Upper Aquifer well for which a K and I value have been determined. Although the composite hydraulic conductivities on the east side of the site are lower than those for the northwest corner, the gradients are higher. Therefore, there are no large and consistent east-west differences in the calculated groundwater velocities in the Upper Aquifer across the site. However the three wells with the highest velocities (UP-7, UP-5 and U-6) are all located in the northeast corner of the site.

Vertical Gradients and Flux

Separating the two aquifers is the inner confining bed, a strata of clay and silty clay 20 ft. to 40 ft. thick. The hydraulic head relationship between the Upper and Lower Aquifers across the inner confining bed varies across the site. Near the southern limit of saturation in the Upper Aquifer north of Cell 14, the hydraulic head in the Lower Aquifer is higher than the water table in the overlying Upper Aquifer. Across a narrow band in the middle of the site there is no significant head difference between the two aquifers, and across the northern 1/2 of the site water levels in the Upper Aquifer are higher than the head in the Lower Aquifer.

Using the October 2002 water level data, there are five Upper Aquifer-Lower Aquifer well pairs available to quantify the gradient across the inner confining bed. The upward gradient, as measured in two well pairs (U-26/L-33 and UP-26/LP-27) averages 0.0378 ft/ft with .77 ft. to 1.5.

ft. of actual water level difference. There are much greater water level differences between the Upper and Lower Aquifers across the northeast side of the site. Downward gradients in the three well pairs in this area (U-7/LP-13, UP-4/LP-12, and U-12/LP-15) average 0.1231, with actual water level differences ranging from 1.63 ft. at U-12/LP-15 to 6.77 ft. at U-7/LP-13.

Laboratory tests conducted on geologic cores of the inner confining bed and from similar formations within and beneath the Lower Aquifer provided estimates of vertical hydraulic conductivities of $1x10^{-7}$ to $1x10^{-8}$ cm/sec. (CH2M HILL, February 1986). Vertical flow occurs across strata, as opposed to along strata for horizontal flow. Therefore, it is appropriate to assume that in a bedded sedimentary sequence, vertical movement will be controlled by the material having the lowest hydraulic conductivity. To evaluate leakage between the Upper and Lower Aquifers, a vertical conductivity of 10^{-8} cm/sec was used.

Applying Darcy's law and using an average vertical hydraulic conductivity of 10^{-8} cm/sec, the gradients discussed previously, and an upward gradient zone 500 ft. wide by the width of the site (2,000 ft.) results in a flux of 391 cubic feet (ft^3) of water per year moving from the Lower to the Upper Aquifer in the southern part of the site. Doing the same calculation for the area with downward gradients across the northern part of the site indicates a downward flux of 3,822 cubic feet (ft^3) per year moving from the Upper Aquifer to the Lower Aquifer.

Comparing the calculated vertical flux into the Lower Aquifer beneath the northern part of the site to the horizontal flux in the Lower Aquifer south of the area overlain by the Upper Aquifer indicates that about 1/4 as much water is moving vertically into the Lower Aquifer as is coming in horizontally from the southwest. As discussed previously, the horizontal gradients in the Lower Aquifer beneath the northern part of the site appear to flatten and change directions to roughly parallel that in the Upper Aquifer. This gradient change is probably due to a combination of the flux of water coming vertically into the Lower Aquifer and the effect of the hydraulic head imposed by the overlying Upper Aquifer.

There are distinct water chemistry differences between the Upper Aquifer and the Lower Aquifer wells in the northern parts of the site. If leakage from the Upper Aquifer is a significant source of water for the Lower Aquifer as the Darcy flux indicates, then the Lower Aquifer water chemistry beneath the northern part of the site should also reflect the influx of Upper Aquifer water.

In summary, although there are strong downward gradients and therefore by Darcy's law a calculable net flux of water from the Upper Aquifer into the Lower Aquifer, water chemistry data suggest that the actual flow is much less than the calculations indicate.

Water Balance Calculation

To synthesize the elements affecting the movement of water though the Upper Aquifer at USEI Site B, a water balance was prepared. One of the most significant benefits of conducting a water balance analysis is to check the validity of the estimated physical and hydrogeologic characteristics of the aquifer and the overall conceptual model of the system. If it is impossible to achieve an approximate level of water balance by applying the site characterization data, then either the characteristics are not correct or the conceptual model is not correct. As will be presented in the following section, the water balance for the Upper Aquifer at Site B indicates that the site characterization data are both correct and reasonable and that the overall conceptual model is correct.

The elements of a water balance for the Upper Aquifer are: lateral inflow, lateral outflow, vertical inflow from the Lower Aquifer, vertical outflow to the Lower Aquifer, infiltration of precipitation, groundwater pumpage, and change in storage. To examine the water balance at Site B, the 13-year period from October 1989 to October 2002 was used. Each of the elements of the water balance discussed independently in the preceding sections is briefly presented below.

Lateral Inflow and Outflow in the Upper Aquifer

As mentioned previously, in the Upper Aquifer there is approximately 43,122 cubic feet (ft^3) per year coming into the site from the northwest and 5,193 cubic feet (ft^3) per year leaving along the eastern side. This results in a net influx of 37,929 cubic feet (ft^3) per year or a total net gain of approximately 498,265 cubic feet (ft^3) over the 1989 to 2002 period.

Vertical Inflow from the Lower Aquifer

The vertical flux calculations provided above account for an influx of 391 cubic feet (ft^3) per year from the Lower Aquifer to the Upper Aquifer over the southern portion of the Upper Aquifer. From 1989 to 2002, this added approximately 5,089 cubic feet (ft^3) of water to the Upper Aquifer.

Vertical Outflow to the Lower Aquifer

Over the northern portion of the Upper Aquifer, the calculated flux from the Upper Aquifer to the Lower Aquifer was about 3,822 cubic feet (ft^3) per year, or 49,683 cubic feet (ft^3) over the 1989-2002 period.

Precipitation Infiltration

There is no direct evidence of the infiltration of precipitation at Site B. In fact, the only hard evidence, very dry moisture contents in the vadose zone determined during the vadose zone characterization, suggests no infiltration is occurring. However, infiltration of precipitation occurs under very arid conditions given the right set of circumstances. Therefore, an infiltration component was included. The percentage of annual precipitation that actually infiltrates and reaches the groundwater is highly speculative and in arid ranges may range from essentially zero to about two percent (2 %) of annual precipitation. An infiltration rate of 0.05 inches per year (0.7 % of annual precipitation) was applied to the total square footage of the Upper Aquifer (about 4,000,000) and equates to about 16,667 cubic feet (ft^3) per year, or 216,967 cubic feet (ft^3) from 1989 to 2002. This calculated amount is intuitively much too large for Site B, especially given the dry vadose sediments present. At Site B where compacted clayey surface soils are prevalent and surface water runoff is channeled into lined ponds, infiltration rates are expected to be very low. The rising groundwater study conducted in 1999 (CH2M HILL, 199b) found no evidence of recent precipitation water in the Upper Aquifer through either water chemistry or tritium age dating and it probable that the effective recharge from precipitation is essentially zero at this site. However, for the purposes of the water balance, a low infiltration rate was used. The conclusions of the water balance evaluation are not affected by the inclusion, or exclusion, of precipitation.

Vadose Zone Drilling and Sampling

Two boreholes, D-33 and D-34, were drilled as part of the vadose zone drilling and sampling program.

Laboratory analyses were performed on 40 vadose zone soil samples from D-33 and D-34. The laboratory data were also grouped by geologic formation to determine the average properties of the different soil types encountered in the two boreholes. A total of seven soil types are identified: the Bruneau Formation soils, Glenns Ferry fluvial facies sand/silty sand soils, Glenns Ferry fluvial facies clayey silt soils, Glenns Ferry sandy silt soils, Glenns Ferry lacustrine sand/silty sand soils, Glenns Ferry lacustrine clayey silt soils, and Glenns Ferry blue-gray clayey silt soils.

Two geologic cross sections of the vadose zone at Site B were prepared from available soil boring logs. Cross section K-K' runs north to south along the eastern edge of the site. Cross section L-L'cuts diagonally across the site from the northeast to the southwest corner. Both cross sections show the interpreted locations of geologic formations and facies beneath the site. It should be noted that these cross sections have a large vertical exaggeration and the actual dip of the various geologic units if drawn to scale would appear almost horizontal.

The following is a summary of the results of the vadose zone drilling and sampling program.

1. Auger drilling and continuous sampling provide effective methods for obtaining detailed stratigraphic information on the vadose zone at Site B to depths of approximately 150 ft.
2. Laboratory data indicate the presence of four distinct soil types: 1) sands and gravels of the Bruneau Formation; 2) sands/silty sands of the fluvial and lacustrine facies of the Glenns Ferry Formation; 3) sandy silts of the fluvial and lacustrine facies of the Glenns Ferry; and 4) clayey silts of the fluvial and lacustrine facies of the Glenns Ferry Formation.
3. Saturated hydraulic conductivities of Bruneau Formation soils show the largest variation and range from 10^{-5} to 10^{-2} cm/sec. Saturated hydraulic conductivities of the Glenns Ferry fluvial and lacustrine sand/silty sand soils are on the order of 10^{-3} cm/sec. Saturated hydraulic conductivities of the Glenns Ferry clayey silt soils are on the order of 10^{-6} cm/sec. Saturated hydraulic conductivities of Glenns Ferry soils at the site differ by three to four orders of magnitude between the sand/silty sand and the clayey silt soils.
4. Cross sections prepared with existing soil boring logs and correlations with grain-size distribution data from Shannon and Wilson indicate that the geologic facies described in D-33 and D-34 are horizontally continuous beneath the site. The ranges of hydraulic conductivity found for soil types in D-33 and D-34 describe the range of hydraulic conductivity for similar soil types at the site.
5. Vadose zone strata dip to the north-northeast between 1.5 and 3.4 degrees. The north-northeast dip direction is consistent with the dip of deeper formations in the area that are known to dip toward the Snake River.
6. The most prominent stratigraphic marker in the vadose zone at Site B is the blue-gray clayey silt layer shown in the cross sections in Figures E-22 and E-23. The change from a light brown to blue-gray color is interpreted as a transition from oxidizing to reducing conditions within the soils. The blue-gray color contact does not parallel the present day potentiometric surface in the uppermost aquifer. Instead, the blue gray contact is located between 11 ft. and 75 ft. above the potentiometric surface and appears to parallel the strata in the vadose zone. This indicates the contact may be due to a change in the depositional environment as, or soon after, the sediments were deposited or is related to a paleo-potentiometric surface in the area.
7. Based on soil boring logs from D-33 and D-34, clayey silt layers comprise 8.6 to 11.0 % (6.5 ft. to 9.4 ft.) of the Glenns Ferry fluvial facies section. Clayey silt layers comprise 67.5 to 75.6 % (28.7 ft. to 36.9 ft.) of the Glenns Ferry lacustrine facies section. The total accumulated thickness of clayey silt layers in D-33 was 43.4 ft. over 155 ft. of borehole. The total thickness of clayey silt layers in D-34 was 38.2 ft. over 153.5 ft.

In situ moisture contents for Site B soils at depths less than 30 ft. are very low and are probably close to the residual value. At these moisture contents, the unsaturated hydraulic conductivity of these soils is also very low, indicating there is a low potential for infiltration and moisture recharge via precipitation at the site.

Computer Modeling

Computer modeling (CH2M HILL, December 1987) was conducted to simulate a release from the bottom of a disposal unit and the movement of a hypothetical leachate plume through the unsaturated zone at Site B. The emphasis was on examining the amount of vertical and lateral

movement of leachate through the unsaturated zone. The modeling effort also provided insight into the question of potential leachate plume widths and therefore appropriate monitoring well spacing.

The model SUTRA (Saturated and Unsaturated Transport), developed by the US. Geological Survey (Voss, 1984), was used to simulate quasi-3D vertical plume migration in the unsaturated zone. Hydraulic properties of the unsaturated strata underlying Site B used in these simulations were determined in the laboratory on samples collected by continuous coring during the vadose zone drilling and sampling investigation, as described above. The model included 43 separate layers consisting of nine (9) different lithologies based on the cores and vadose zone hydraulic properties analysis.

Simulations were conducted to analyze the effect of both "falling head" (catastrophic release) and "continuous leak for two (2) years" (slow leak based on infiltrating precipitation). The effect on plume spreading of variable leachate source depths and dimensions was also examined. The following represent the relevant conclusions that can be drawn from the simulation results:

1. The results from both simulated scenarios indicate that the unsaturated subsurface beneath Site B acts to completely halt the downward migration of large volumes of source fluid before it can reach the water table. This occurs primarily because the unsaturated zone is thick, relatively dry, and comprised of many low-permeability stratigraphic units that tend to retard and spread out the infiltrating liquids.
2. Simulated dissolved-solute contaminant releases from trenches at Site B, as large as 300,000 gallons and released over a period of two (2) years at a depth of 40 ft., did not reach the water table. A steady-state distribution of concentration for this particular scenario was reached in 15,000 years. At that point in elapsed time, the maximum depth of infiltration was about 130 ft., roughly 50 ft. above the water table.
3. The scale of the leak discussed in item 2 above is the largest leak considered likely to occur through the particular source-area diameter selected (10 ft.). However, should this scale of leak underestimate the size of potential contaminant sources, the results imply that for contamination to reach the water table, and to do so in less than 100 years, it would have to originate from a substantially larger source than the volume of the largest scenario simulated in this investigation.
4. Monitoring well spacing cannot be based solely on the simulation results because the hypothetical plume did not reach the depth of the Upper Aquifer at Site B. Therefore, other criteria must be used to establish appropriate monitoring well spacing and locations. These include location of waste disposal units and aquifer flow rates and flow directions.

Attachment 2

Dose Rate to Gondola Surveyor

MicroShield 7.02
US Ecology (08-MSD-7.02-1419)

Date	By	Checked

Filename	Run Date	Run Time	Duration
Gondola - Corrected.ms7	April 21, 2010	2:26:27 PM	00:00:01

Project Info	
Case Title	Case 1
Description	Case 1
Geometry	13 - Rectangular Volume

Source Dimensions	
Length	289.56 cm (9 ft 6.0 in)
Width	1.6e+3 cm (52 ft 6.0 in)
Height	167.64 cm (5 ft 6.0 in)

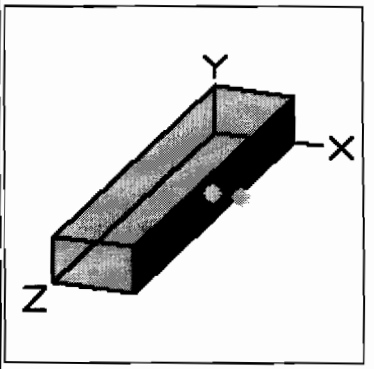

Dose Points			
A	X	Y	Z
#1	290.56 cm (9 ft 6.4 in)	83.82 cm (2 ft 9.0 in)	800.1 cm (26 ft 3.0 in)
#2	390.195 cm (12 ft 9.6 in)	83.82 cm (2 ft 9.0 in)	800.1 cm (26 ft 3.0 in)

Shields			
Shield N	Dimension	Material	Density
Source	7.77e+07 cm³	Concrete	1.5
Shield 1	.635 cm	Iron	7.86
Air Gap		Air	0.00122

Source Input: Grouping Method - Standard Indices
Number of Groups: 25
Lower Energy Cutoff: 0.015
Photons < 0.015: Included
Library: Grove

Nuclide	Ci	Bq	µCi/cm³	Bq/cm³
Ac-227	2.4992e-004	9.2470e+006	3.2174e-006	1.1904e-001
Bi-210	5.5048e-003	2.0368e+008	7.0868e-005	2.6221e+000
Bi-211	2.4992e-004	9.2470e+006	3.2174e-006	1.1904e-001
Bi-214	5.5048e-003	2.0368e+008	7.0868e-005	2.6221e+000
Fr-223	2.4992e-006	9.2470e+004	3.2174e-008	1.1904e-003
Pa-231	2.4992e-004	9.2470e+006	3.2174e-006	1.1904e-001
Pa-234m	1.5505e-002	5.7369e+008	1.9961e-004	7.3856e+000
Pb-210	5.5048e-003	2.0368e+008	7.0868e-005	2.6221e+000
Pb-211	2.4992e-004	9.2470e+006	3.2174e-006	1.1904e-001
Pb-214	5.5048e-003	2.0368e+008	7.0868e-005	2.6221e+000
Po-210	5.5048e-003	2.0368e+008	7.0868e-005	2.6221e+000
Po-214	5.5048e-003	2.0368e+008	7.0868e-005	2.6221e+000
Po-215	2.4992e-004	9.2470e+006	3.2174e-006	1.1904e-001

Po-218	5.5048e-003	2.0368e+008	7.0868e-005	2.6221e+000
Ra-223	2.4992e-004	9.2470e+006	3.2174e-006	1.1904e-001
Ra-226	5.5048e-003	2.0368e+008	7.0868e-005	2.6221e+000
Rn-219	2.4992e-004	9.2470e+006	3.2174e-006	1.1904e-001
Rn-222	5.5048e-003	2.0368e+008	7.0868e-005	2.6221e+000
Th-227	2.4742e-004	9.1545e+006	3.1852e-006	1.1785e-001
Th-230	5.5048e-003	2.0368e+008	7.0868e-005	2.6221e+000
Th-231	2.4992e-004	9.2470e+006	3.2174e-006	1.1904e-001
Th-234	1.5505e-002	5.7369e+008	1.9961e-004	7.3856e+000
Tl-207	2.4992e-004	9.2470e+006	3.2174e-006	1.1904e-001
U-234	5.5048e-003	2.0368e+008	7.0868e-005	2.6221e+000
U-235	2.4992e-004	9.2470e+006	3.2174e-006	1.1904e-001
U-238	1.5505e-002	5.7369e+008	1.9961e-004	7.3856e+000

Buildup: The material reference is Source	
Integration Parameters	
X Direction	10
Y Direction	20
Z Direction	20

Results - Dose Point # 1 - (290.56,83.82,800.1) cm

Energy (MeV)	Activity (Photons/sec)	Fluence Rate MeV/cm²/sec No Buildup	Fluence Rate MeV/cm²/sec With Buildup	Exposure Rate mR/hr No Buildup	Exposure Rate mR/hr With Buildup
0.015	2.466e+08	8.531e-255	5.082e-26	7.317e-256	4.359e-27
0.02	5.138e+04	3.521e-117	1.666e-29	1.220e-118	5.771e-31
0.03	2.224e+06	2.360e-39	1.595e-27	2.339e-41	1.580e-29
0.04	3.483e+04	7.666e-22	3.067e-21	3.390e-24	1.356e-23
0.05	1.158e+07	2.965e-12	2.082e-11	7.897e-15	5.546e-14
0.06	2.325e+07	1.054e-08	1.130e-07	2.093e-11	2.245e-10
0.08	5.357e+07	2.403e-05	3.752e-04	3.803e-08	5.937e-07
0.1	3.765e+07	3.449e-04	5.785e-03	5.277e-07	8.851e-06
0.15	2.617e+06	4.006e-04	5.717e-03	6.597e-07	9.414e-06
0.2	2.909e+07	1.336e-02	1.594e-01	2.359e-05	2.814e-04
0.3	4.759e+07	6.777e-02	6.036e-01	1.286e-04	1.145e-03
0.4	8.033e+07	2.284e-01	1.636e+00	4.450e-04	3.187e-03
0.5	3.683e+06	1.742e-02	1.049e-01	3.419e-05	2.058e-04
0.6	9.820e+07	6.953e-01	3.640e+00	1.357e-03	7.105e-03
0.8	2.081e+07	2.747e-01	1.167e+00	5.224e-04	2.219e-03
1.0	6.930e+07	1.469e+00	5.365e+00	2.707e-03	9.889e-03
1.5	3.878e+07	1.892e+00	5.429e+00	3.184e-03	9.133e-03
2.0	5.451e+07	4.654e+00	1.165e+01	7.197e-03	1.801e-02
Totals	**8.199e+08**	**9.312e+00**	**2.976e+01**	**1.560e-02**	**5.119e-02**

Results - Dose Point # 2 - (390.195,83.82,800.1) cm

Energy (MeV)	Activity (Photons/sec)	Fluence Rate MeV/cm²/sec	Fluence Rate MeV/cm²/sec	Exposure Rate mR/hr	Exposure Rate mR/hr

		No Buildup	With Buildup	No Buildup	With Buildup
0.015	2.466e+08	2.963e-146	2.106e-26	2.542e-147	1.807e-27
0.02	5.138e+04	2.334e-70	6.904e-30	8.085e-72	2.391e-31
0.03	2.224e+06	9.389e-25	1.903e-24	9.305e-27	1.886e-26
0.04	3.483e+04	4.394e-15	1.470e-14	1.943e-17	6.502e-17
0.05	1.158e+07	3.380e-08	1.693e-07	9.005e-11	4.511e-10
0.06	2.325e+07	7.504e-06	4.857e-05	1.490e-08	9.648e-08
0.08	5.357e+07	1.014e-03	7.671e-03	1.605e-06	1.214e-05
0.1	3.765e+07	3.800e-03	2.823e-02	5.814e-06	4.318e-05
0.15	2.617e+06	1.350e-03	8.375e-03	2.222e-06	1.379e-05
0.2	2.909e+07	3.027e-02	1.634e-01	5.343e-05	2.883e-04
0.3	4.759e+07	1.084e-01	4.807e-01	2.056e-04	9.119e-04
0.4	8.033e+07	3.030e-01	1.171e+00	5.904e-04	2.281e-03
0.5	3.683e+06	2.035e-02	7.081e-02	3.994e-05	1.390e-04
0.6	9.820e+07	7.385e-01	2.357e+00	1.441e-03	4.601e-03
0.8	2.081e+07	2.543e-01	7.150e-01	4.838e-04	1.360e-03
1.0	6.930e+07	1.235e+00	3.171e+00	2.277e-03	5.845e-03
1.5	3.878e+07	1.369e+00	3.024e+00	2.304e-03	5.087e-03
2.0	5.451e+07	3.093e+00	6.274e+00	4.783e-03	9.703e-03
Totals	**8.199e+08**	**7.159e+00**	**1.747e+01**	**1.219e-02**	**3.028e-02**

Attachment 3

Dose Rate to Excavator Operator

MicroShield 7.02
US Ecology (08-MSD-7.02-1419)

Date	By	Checked

Filename	Run Date	Run Time	Duration
Excavator Operator.ms7	April 26, 2010	2:23:51 PM	00:00:01

Project Info	
Case Title	Case 1
Description	Case 1
Geometry	13 - Rectangular Volume

Source Dimensions	
Length	167.64 cm (5 ft 6.0 in)
Width	1.6e+3 cm (52 ft 6.0 in)
Height	289.56 cm (9 ft 6.0 in)

Dose Points			
A	X	Y	Z
#1	270.18 cm (8 ft 10.4 in)	144.78 cm (4 ft 9.0 in)	800.1 cm (26 ft 3.0 in)

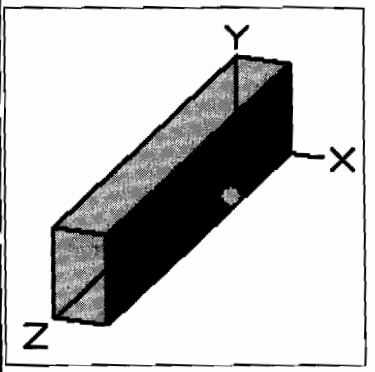

Shields			
Shield N	Dimension	Material	Density
Source	7.77e+07 cm³	Concrete	1.5
Shield 1	2.54 cm	Iron	7.86
Air Gap		Air	0.00122

Source Input: Grouping Method - Standard Indices
Number of Groups: 25
Lower Energy Cutoff: 0.015
Photons < 0.015: Included
Library: Grove

Nuclide	Ci	Bq	µCi/cm³	Bq/cm³
Ac-227	3.1700e-004	1.1729e+007	4.0810e-006	1.5100e-001
Bi-210	6.9900e-003	2.5863e+008	8.9988e-005	3.3296e+000
Bi-211	3.1700e-004	1.1729e+007	4.0810e-006	1.5100e-001
Bi-214	6.9900e-003	2.5863e+008	8.9988e-005	3.3296e+000
Fr-223	3.1700e-006	1.1729e+005	4.0810e-008	1.5100e-003
Pa-231	3.1700e-004	1.1729e+007	4.0810e-006	1.5100e-001
Pa-234m	1.9700e-002	7.2890e+008	2.5362e-004	9.3838e+000
Pb-210	6.9900e-003	2.5863e+008	8.9988e-005	3.3296e+000
Pb-211	3.1700e-004	1.1729e+007	4.0810e-006	1.5100e-001
Pb-214	6.9900e-003	2.5863e+008	8.9988e-005	3.3296e+000
Po-210	6.9900e-003	2.5863e+008	8.9988e-005	3.3296e+000
Po-214	6.9900e-003	2.5863e+008	8.9988e-005	3.3296e+000
Po-215	3.1700e-004	1.1729e+007	4.0810e-006	1.5100e-001
Po-218	6.9900e-003	2.5863e+008	8.9988e-005	3.3296e+000

Ra-223	3.1700e-004	1.1729e+007	4.0810e-006	1.5100e-001
Ra-226	6.9900e-003	2.5863e+008	8.9988e-005	3.3296e+000
Rn-219	3.1700e-004	1.1729e+007	4.0810e-006	1.5100e-001
Rn-222	6.9900e-003	2.5863e+008	8.9988e-005	3.3296e+000
Th-227	3.1400e-004	1.1618e+007	4.0424e-006	1.4957e-001
Th-230	6.9900e-003	2.5863e+008	8.9988e-005	3.3296e+000
Th-231	3.1700e-004	1.1729e+007	4.0810e-006	1.5100e-001
Th-234	1.9700e-002	7.2890e+008	2.5362e-004	9.3838e+000
Tl-207	3.1700e-004	1.1729e+007	4.0810e-006	1.5100e-001
U-234	6.9900e-003	2.5863e+008	8.9988e-005	3.3296e+000
U-235	3.1700e-004	1.1729e+007	4.0810e-006	1.5100e-001
U-238	1.9700e-002	7.2890e+008	2.5362e-004	9.3838e+000

Buildup: The material reference is Source	
Integration Parameters	
X Direction	10
Y Direction	20
Z Direction	20

Results

Energy (MeV)	Activity (Photons/sec)	Fluence Rate MeV/cm²/sec No Buildup	Fluence Rate MeV/cm²/sec With Buildup	Exposure Rate mR/hr No Buildup	Exposure Rate mR/hr With Buildup
0.015	3.132e+08	0.000e+00	3.144e-26	0.000e+00	2.697e-27
0.02	6.518e+04	6.147e-232	1.030e-29	2.129e-233	3.566e-31
0.03	2.821e+06	8.577e-76	9.853e-28	8.500e-78	9.765e-30
0.04	4.420e+04	1.114e-37	4.094e-29	4.928e-40	1.811e-31
0.05	1.470e+07	1.800e-20	1.680e-19	4.796e-23	4.476e-22
0.06	2.954e+07	1.663e-13	2.491e-12	3.303e-16	4.948e-15
0.08	6.802e+07	1.452e-07	3.009e-06	2.298e-10	4.761e-09
0.1	4.783e+07	1.457e-05	3.128e-04	2.230e-08	4.786e-07
0.15	3.320e+06	7.188e-05	1.213e-03	1.184e-07	1.997e-06
0.2	3.693e+07	3.487e-03	4.777e-02	6.155e-06	8.432e-05
0.3	6.042e+07	2.200e-02	2.230e-01	4.173e-05	4.230e-04
0.4	1.020e+08	7.991e-02	6.539e-01	1.557e-04	1.274e-03
0.5	4.677e+06	6.361e-03	4.396e-02	1.249e-05	8.629e-05
0.6	1.247e+08	2.620e-01	1.579e+00	5.113e-04	3.081e-03
0.8	2.642e+07	1.086e-01	5.317e-01	2.066e-04	1.011e-03
1.0	8.800e+07	6.035e-01	2.535e+00	1.113e-03	4.673e-03
1.5	4.924e+07	8.340e-01	2.725e+00	1.403e-03	4.584e-03
2.0	6.921e+07	2.139e+00	6.047e+00	3.308e-03	9.351e-03
Totals	**1.041e+09**	**4.059e+00**	**1.439e+01**	**6.758e-03**	**2.457e-02**

Attachment 4

Dose Rate to Truck Surveyor and Truck Driver

MicroShield 7.02
US Ecology (08-MSD-7.02-1419)

Date	By	Checked

Filename	Run Date	Run Time	Duration
Intermodal - Corected.ms7	April 21, 2010	3:09:21 PM	00:00:00

Project Info	
Case Title	Case 1
Description	Case 1
Geometry	13 - Rectangular Volume

Source Dimensions	
Length	218.44 cm (7 ft 2.0 in)
Width	462.28 cm (15 ft 2.0 in)
Height	127.0 cm (4 ft 2.0 in)

Dose Points			
A	X	Y	Z
#1	319.075 cm (10 ft 5.6 in)	63.5 cm (2 ft 1.0 in)	231.14 cm (7 ft 7.0 in)

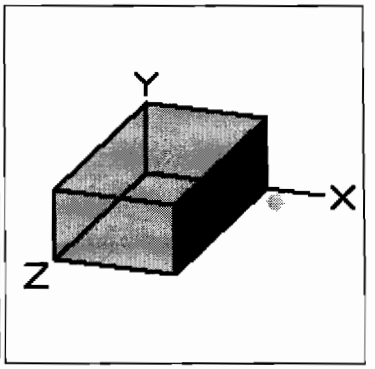

Shields			
Shield N	Dimension	Material	Density
Source	12.825 m³	Concrete	1.5
Shield 1	.006 m	Aluminum	2.7
Air Gap		Air	0.00122

Source Input: Grouping Method - Standard Indices
Number of Groups: 25
Lower Energy Cutoff: 0.015
Photons < 0.015: Included
Library: Grove

Nuclide	Ci	Bq	µCi/cm³	Bq/cm³
Ac-227	5.2301e-005	1.9351e+006	4.0782e-006	1.5089e-001
Bi-210	1.1520e-003	4.2624e+007	8.9828e-005	3.3236e+000
Bi-211	5.2301e-005	1.9351e+006	4.0782e-006	1.5089e-001
Bi-214	1.1520e-003	4.2624e+007	8.9828e-005	3.3236e+000
Fr-223	5.2301e-007	1.9351e+004	4.0782e-008	1.5089e-003
Pa-231	5.2301e-005	1.9351e+006	4.0782e-006	1.5089e-001
Pa-234m	3.2448e-003	1.2006e+008	2.5302e-004	9.3616e+000
Pb-210	1.1520e-003	4.2624e+007	8.9828e-005	3.3236e+000
Pb-211	5.2301e-005	1.9351e+006	4.0782e-006	1.5089e-001
Pb-214	1.1520e-003	4.2624e+007	8.9828e-005	3.3236e+000
Po-210	1.1520e-003	4.2624e+007	8.9828e-005	3.3236e+000
Po-214	1.1520e-003	4.2624e+007	8.9828e-005	3.3236e+000
Po-215	5.2301e-005	1.9351e+006	4.0782e-006	1.5089e-001
Po-218	1.1520e-003	4.2624e+007	8.9828e-005	3.3236e+000

Ra-223	5.2301e-005	1.9351e+006	4.0782e-006	1.5089e-001
Ra-226	1.1520e-003	4.2624e+007	8.9828e-005	3.3236e+000
Rn-219	5.2301e-005	1.9351e+006	4.0782e-006	1.5089e-001
Rn-222	1.1520e-003	4.2624e+007	8.9828e-005	3.3236e+000
Th-227	5.1778e-005	1.9158e+006	4.0374e-006	1.4938e-001
Th-230	1.1520e-003	4.2624e+007	8.9828e-005	3.3236e+000
Th-231	5.2301e-005	1.9351e+006	4.0782e-006	1.5089e-001
Th-234	3.2448e-003	1.2006e+008	2.5302e-004	9.3616e+000
Tl-207	5.2301e-005	1.9351e+006	4.0782e-006	1.5089e-001
U-234	1.1520e-003	4.2624e+007	8.9828e-005	3.3236e+000
U-235	5.2301e-005	1.9351e+006	4.0782e-006	1.5089e-001
U-238	3.2448e-003	1.2006e+008	2.5302e-004	9.3616e+000

Buildup: The material reference is Source	
Integration Parameters	
X Direction	10
Y Direction	20
Z Direction	20

Results

Energy (MeV)	Activity (Photons/sec)	Fluence Rate MeV/cm²/sec No Buildup	Fluence Rate MeV/cm²/sec With Buildup	Exposure Rate mR/hr No Buildup	Exposure Rate mR/hr With Buildup
0.015	5.161e+07	7.073e-24	7.862e-24	6.067e-25	6.744e-25
0.02	1.075e+04	2.823e-15	3.460e-15	9.777e-17	1.199e-16
0.03	4.654e+05	5.626e-07	8.734e-07	5.575e-09	8.656e-09
0.04	7.290e+03	5.264e-07	1.050e-06	2.328e-09	4.644e-09
0.05	2.423e+06	8.946e-04	2.229e-03	2.383e-06	5.938e-06
0.06	4.865e+06	4.130e-03	1.209e-02	8.203e-06	2.400e-05
0.08	1.121e+07	2.236e-02	7.787e-02	3.538e-05	1.232e-04
0.1	7.879e+06	2.513e-02	9.382e-02	3.845e-05	1.435e-04
0.15	5.477e+05	3.451e-03	1.303e-02	5.682e-06	2.145e-05
0.2	6.088e+06	5.924e-02	2.133e-01	1.046e-04	3.764e-04
0.3	9.960e+06	1.762e-01	5.684e-01	3.343e-04	1.078e-03
0.4	1.681e+07	4.549e-01	1.337e+00	8.863e-04	2.606e-03
0.5	7.708e+05	2.907e-02	7.948e-02	5.705e-05	1.560e-04
0.6	2.055e+07	1.018e+00	2.614e+00	1.987e-03	5.102e-03
0.8	4.354e+06	3.330e-01	7.791e-01	6.334e-04	1.482e-03
1.0	1.450e+07	1.559e+00	3.410e+00	2.874e-03	6.285e-03
1.5	8.115e+06	1.629e+00	3.173e+00	2.741e-03	5.339e-03
2.0	1.141e+07	3.558e+00	6.481e+00	5.502e-03	1.002e-02
Totals	**1.716e+08**	**8.872e+00**	**1.885e+01**	**1.521e-02**	**3.276e-02**

Attachment 5

Dose Rate to Cell Operator

MicroShield 7.02
US Ecology (08-MSD-7.02-1419)

Date	By	Checked

Filename	Run Date	Run Time	Duration
Cell Operator.ms7	April 26, 2010	2:17:38 PM	00:00:00

Project Info	
Case Title	Case 1
Description	Case 1
Geometry	13 - Rectangular Volume

Source Dimensions	
Length	30.48 cm (1 ft)
Width	914.4 cm (30 ft)
Height	609.6 cm (20 ft 0.0 in)

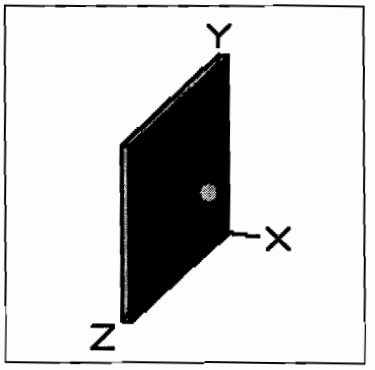

Dose Points			
A	X	Y	Z
#1	133.02 cm (4 ft 4.4 in)	304.8 cm (10 ft 0.0 in)	457.2 cm (15 ft)

Shields			
Shield N	Dimension	Material	Density
Source	1.04e+06 in³	Concrete	1.5
Shield 1	1.0 in	Iron	7.86
Air Gap		Air	0.00122

Source Input: Grouping Method - Standard Indices
Number of Groups: 25
Lower Energy Cutoff: 0.015
Photons < 0.015: Included
Library: Grove

Nuclide	Ci	Bq	µCi/cm³	Bq/cm³
Ac-227	6.9500e-005	2.5715e+006	4.0906e-006	1.5135e-001
Bi-210	1.5300e-003	5.6610e+007	9.0052e-005	3.3319e+000
Bi-211	6.9500e-005	2.5715e+006	4.0906e-006	1.5135e-001
Bi-214	1.5300e-003	5.6610e+007	9.0052e-005	3.3319e+000
Fr-223	6.9500e-007	2.5715e+004	4.0906e-008	1.5135e-003
Pa-231	6.9500e-005	2.5715e+006	4.0906e-006	1.5135e-001
Pa-234m	4.3100e-003	1.5947e+008	2.5368e-004	9.3860e+000
Pb-210	1.5300e-003	5.6610e+007	9.0052e-005	3.3319e+000
Pb-211	6.9500e-005	2.5715e+006	4.0906e-006	1.5135e-001
Pb-214	1.5300e-003	5.6610e+007	9.0052e-005	3.3319e+000
Po-210	1.5300e-003	5.6610e+007	9.0052e-005	3.3319e+000
Po-214	1.5300e-003	5.6610e+007	9.0052e-005	3.3319e+000
Po-215	6.9500e-005	2.5715e+006	4.0906e-006	1.5135e-001
Po-218	1.5300e-003	5.6610e+007	9.0052e-005	3.3319e+000

Ra-223	6.9500e-005	2.5715e+006	4.0906e-006	1.5135e-001
Ra-226	1.5300e-003	5.6610e+007	9.0052e-005	3.3319e+000
Rn-219	6.9500e-005	2.5715e+006	4.0906e-006	1.5135e-001
Rn-222	1.5300e-003	5.6610e+007	9.0052e-005	3.3319e+000
Th-227	6.8800e-005	2.5456e+006	4.0494e-006	1.4983e-001
Th-230	1.5300e-003	5.6610e+007	9.0052e-005	3.3319e+000
Th-231	6.9500e-005	2.5715e+006	4.0906e-006	1.5135e-001
Th-234	4.3100e-003	1.5947e+008	2.5368e-004	9.3860e+000
Tl-207	6.9500e-005	2.5715e+006	4.0906e-006	1.5135e-001
U-234	1.5300e-003	5.6610e+007	9.0052e-005	3.3319e+000
U-235	6.9500e-005	2.5715e+006	4.0906e-006	1.5135e-001
U-238	4.3100e-003	1.5947e+008	2.5368e-004	9.3860e+000

Buildup: The material reference is Source	
Integration Parameters	
X Direction	10
Y Direction	20
Z Direction	20

Results

Energy (MeV)	Activity (Photons/sec)	Fluence Rate MeV/cm²/sec No Buildup	Fluence Rate MeV/cm²/sec With Buildup	Exposure Rate mR/hr No Buildup	Exposure Rate mR/hr With Buildup
0.015	6.856e+07	0.000e+00	1.151e-26	0.000e+00	9.874e-28
0.02	1.429e+04	5.634e-228	3.775e-30	1.952e-229	1.308e-31
0.03	6.185e+05	3.727e-75	3.614e-28	3.693e-77	3.581e-30
0.04	9.686e+03	1.231e-37	1.501e-29	5.446e-40	6.638e-32
0.05	3.218e+06	1.794e-20	1.673e-19	4.778e-23	4.458e-22
0.06	6.463e+06	1.728e-13	2.588e-12	3.432e-16	5.140e-15
0.08	1.489e+07	1.485e-07	3.060e-06	2.351e-10	4.842e-09
0.1	1.047e+07	1.466e-05	3.136e-04	2.243e-08	4.797e-07
0.15	7.278e+05	7.270e-05	1.234e-03	1.197e-07	2.033e-06
0.2	8.086e+06	3.558e-03	4.944e-02	6.279e-06	8.725e-05
0.3	1.323e+07	2.274e-02	2.354e-01	4.313e-05	4.465e-04
0.4	2.233e+07	8.329e-02	6.963e-01	1.623e-04	1.357e-03
0.5	1.024e+06	6.670e-03	4.702e-02	1.309e-05	9.230e-05
0.6	2.729e+07	2.759e-01	1.692e+00	5.386e-04	3.303e-03
0.8	5.783e+06	1.151e-01	5.702e-01	2.190e-04	1.084e-03
1.0	1.926e+07	6.420e-01	2.712e+00	1.183e-03	4.998e-03
1.5	1.078e+07	8.882e-01	2.878e+00	1.494e-03	4.842e-03
2.0	1.515e+07	2.265e+00	6.282e+00	3.502e-03	9.715e-03
Totals	**2.279e+08**	**4.303e+00**	**1.516e+01**	**7.163e-03**	**2.593e-02**

Attachment 6

ResRad Evaluation

Table of Contents

Part I: Mixture Sums and Single Radionuclide Guidelines

Dose Conversion Factor (and Related) Parameter Summary ... 2
Site-Specific Parameter Summary 5
Summary of Pathway Selections 11
Contaminated Zone and Total Dose Summary 12
Total Dose Components
Time = 0.000E+00 13
Time = 1.000E+00 14
Time = 3.000E+00 15
Time = 1.000E+01 16
Time = 3.000E+01 17
Time = 1.000E+02 18
Time = 3.000E+02 19
Time = 1.000E+03 20
Dose/Source Ratios Summed Over All Pathways 21
Single Radionuclide Soil Guidelines 21
Dose Per Nuclide Summed Over All Pathways 22
Soil Concentration Per Nuclide 23

Dose Conversion Factor (and Related) Parameter Summary
Dose Library: FGR 12 & FGR 11

Menu	Parameter	Current Value#	Base Case*	Parameter Name
A-1	DCF's for external ground radiation, (mrem/yr)/(pCi/g)			
A-1	Ac-227 (Source: FGR 12)	4.951E-04	4.951E-04	DCF1(1)
A-1	At-218 (Source: FGR 12)	5.847E-03	5.847E-03	DCF1(2)
A-1	Bi-210 (Source: FGR 12)	3.606E-03	3.606E-03	DCF1(3)
A-1	Bi-211 (Source: FGR 12)	2.559E-01	2.559E-01	DCF1(4)
A-1	Bi-214 (Source: FGR 12)	9.808E+00	9.808E+00	DCF1(5)
A-1	Fr-223 (Source: FGR 12)	1.980E-01	1.980E-01	DCF1(6)
A-1	Pa-231 (Source: FGR 12)	1.906E-01	1.906E-01	DCF1(7)
A-1	Pa-234 (Source: FGR 12)	1.155E+01	1.155E+01	DCF1(8)
A-1	Pa-234m (Source: FGR 12)	8.967E-02	8.967E-02	DCF1(9)
A-1	Pb-210 (Source: FGR 12)	2.447E-03	2.447E-03	DCF1(10)
A-1	Pb-211 (Source: FGR 12)	3.064E-01	3.064E-01	DCF1(11)
A-1	Pb-214 (Source: FGR 12)	1.341E+00	1.341E+00	DCF1(12)
A-1	Po-210 (Source: FGR 12)	5.231E-05	5.231E-05	DCF1(13)
A-1	Po-211 (Source: FGR 12)	4.764E-02	4.764E-02	DCF1(14)
A-1	Po-214 (Source: FGR 12)	5.138E-04	5.138E-04	DCF1(15)
A-1	Po-215 (Source: FGR 12)	1.016E-03	1.016E-03	DCF1(16)
A-1	Po-218 (Source: FGR 12)	5.642E-05	5.642E-05	DCF1(17)
A-1	Ra-223 (Source: FGR 12)	6.034E-01	6.034E-01	DCF1(18)
A-1	Ra-226 (Source: FGR 12)	3.176E-02	3.176E-02	DCF1(19)
A-1	Rn-219 (Source: FGR 12)	3.083E-01	3.083E-01	DCF1(20)
A-1	Rn-222 (Source: FGR 12)	2.354E-03	2.354E-03	DCF1(21)
A-1	Th-227 (Source: FGR 12)	5.212E-01	5.212E-01	DCF1(22)
A-1	Th-230 (Source: FGR 12)	1.209E-03	1.209E-03	DCF1(23)
A-1	Th-231 (Source: FGR 12)	3.643E-02	3.643E-02	DCF1(24)
A-1	Th-234 (Source: FGR 12)	2.410E-02	2.410E-02	DCF1(25)
A-1	Tl-207 (Source: FGR 12)	1.980E-02	1.980E-02	DCF1(26)
A-1	Tl-210 (Source: no data)	0.000E+00	-2.000E+00	DCF1(27)
A-1	U-234 (Source: FGR 12)	4.017E-04	4.017E-04	DCF1(28)
A-1	U-235 (Source: FGR 12)	7.211E-01	7.211E-01	DCF1(29)
A-1	U-238 (Source: FGR 12)	1.031E-04	1.031E-04	DCF1(30)
B-1	Dose conversion factors for inhalation, mrem/pCi:			
B-1	Ac-227+D	6.724E+00	6.700E+00	DCF2(1)
B-1	Pa-231	1.280E+00	1.280E+00	DCF2(2)
B-1	Pb-210+D	2.320E-02	1.360E-02	DCF2(3)
B-1	Ra-226+D	8.594E-03	8.580E-03	DCF2(4)
B-1	Th-230	3.260E-01	3.260E-01	DCF2(5)
B-1	U-234	1.320E-01	1.320E-01	DCF2(6)
B-1	U-235+D	1.230E-01	1.230E-01	DCF2(7)
B-1	U-238	1.180E-01	1.180E-01	DCF2(8)
B-1	U-238+D	1.180E-01	1.180E-01	DCF2(9)
D-1	Dose conversion factors for ingestion, mrem/pCi:			
D-1	Ac-227+D	1.480E-02	1.410E-02	DCF3(1)
D-1	Pa-231	1.060E-02	1.060E-02	DCF3(2)
D-1	Pb-210+D	7.276E-03	5.370E-03	DCF3(3)
D-1	Ra-226+D	1.321E-03	1.320E-03	DCF3(4)
D-1	Th-230	5.480E-04	5.480E-04	DCF3(5)
D-1	U-234	2.830E-04	2.830E-04	DCF3(6)

Dose Conversion Factor (and Related) Parameter Summary (continued)
Dose Library: FGR 12 & FGR 11

Menu	Parameter	Current Value#	Base Case*	Parameter Name
D-1	U-235+D	2.673E-04	2.660E-04	DCF3(7)
D-1	U-238	2.550E-04	2.550E-04	DCF3(8)
D-1	U-238+D	2.687E-04	2.550E-04	DCF3(9)
D-34	Food transfer factors:			
D-34	Ac-227+D , plant/soil concentration ratio, dimensionless	2.500E-03	2.500E-03	RTF(1,1)
D-34	Ac-227+D , beef/livestock-intake ratio, (pCi/kg)/(pCi/d)	2.000E-05	2.000E-05	RTF(1,2)
D-34	Ac-227+D , milk/livestock-intake ratio, (pCi/L)/(pCi/d)	2.000E-05	2.000E-05	RTF(1,3)
D-34				
D-34	Pa-231 , plant/soil concentration ratio, dimensionless	1.000E-02	1.000E-02	RTF(2,1)
D-34	Pa-231 , beef/livestock-intake ratio, (pCi/kg)/(pCi/d)	5.000E-03	5.000E-03	RTF(2,2)
D-34	Pa-231 , milk/livestock-intake ratio, (pCi/L)/(pCi/d)	5.000E-06	5.000E-06	RTF(2,3)
D-34				
D-34	Pb-210+D , plant/soil concentration ratio, dimensionless	1.000E-02	1.000E-02	RTF(3,1)
D-34	Pb-210+D , beef/livestock-intake ratio, (pCi/kg)/(pCi/d)	8.000E-04	8.000E-04	RTF(3,2)
D-34	Pb-210+D , milk/livestock-intake ratio, (pCi/L)/(pCi/d)	3.000E-04	3.000E-04	RTF(3,3)
D-34				
D-34	Ra-226+D , plant/soil concentration ratio, dimensionless	4.000E-02	4.000E-02	RTF(4,1)
D-34	Ra-226+D , beef/livestock-intake ratio, (pCi/kg)/(pCi/d)	1.000E-03	1.000E-03	RTF(4,2)
D-34	Ra-226+D , milk/livestock-intake ratio, (pCi/L)/(pCi/d)	1.000E-03	1.000E-03	RTF(4,3)
D-34				
D-34	Th-230 , plant/soil concentration ratio, dimensionless	1.000E-03	1.000E-03	RTF(5,1)
D-34	Th-230 , beef/livestock-intake ratio, (pCi/kg)/(pCi/d)	1.000E-04	1.000E-04	RTF(5,2)
D-34	Th-230 , milk/livestock-intake ratio, (pCi/L)/(pCi/d)	5.000E-06	5.000E-06	RTF(5,3)
D-34				
D-34	U-234 , plant/soil concentration ratio, dimensionless	2.500E-03	2.500E-03	RTF(6,1)
D-34	U-234 , beef/livestock-intake ratio, (pCi/kg)/(pCi/d)	3.400E-04	3.400E-04	RTF(6,2)
D-34	U-234 , milk/livestock-intake ratio, (pCi/L)/(pCi/d)	6.000E-04	6.000E-04	RTF(6,3)
D-34				
D-34	U-235+D , plant/soil concentration ratio, dimensionless	2.500E-03	2.500E-03	RTF(7,1)
D-34	U-235+D , beef/livestock-intake ratio, (pCi/kg)/(pCi/d)	3.400E-04	3.400E-04	RTF(7,2)
D-34	U-235+D , milk/livestock-intake ratio, (pCi/L)/(pCi/d)	6.000E-04	6.000E-04	RTF(7,3)
D-34				
D-34	U-238 , plant/soil concentration ratio, dimensionless	2.500E-03	2.500E-03	RTF(8,1)
D-34	U-238 , beef/livestock-intake ratio, (pCi/kg)/(pCi/d)	3.400E-04	3.400E-04	RTF(8,2)
D-34	U-238 , milk/livestock-intake ratio, (pCi/L)/(pCi/d)	6.000E-04	6.000E-04	RTF(8,3)
D-34				
D-34	U-238+D , plant/soil concentration ratio, dimensionless	2.500E-03	2.500E-03	RTF(9,1)
D-34	U-238+D , beef/livestock-intake ratio, (pCi/kg)/(pCi/d)	3.400E-04	3.400E-04	RTF(9,2)
D-34	U-238+D , milk/livestock-intake ratio, (pCi/L)/(pCi/d)	6.000E-04	6.000E-04	RTF(9,3)
D-5	Bioaccumulation factors, fresh water, L/kg:			
D-5	Ac-227+D , fish	1.500E+01	1.500E+01	BIOFAC(1,1)
D-5	Ac-227+D , crustacea and mollusks	1.000E+03	1.000E+03	BIOFAC(1,2)
D-5				
D-5	Pa-231 , fish	1.000E+01	1.000E+01	BIOFAC(2,1)
D-5	Pa-231 , crustacea and mollusks	1.100E+02	1.100E+02	BIOFAC(2,2)
D-5				
D-5	Pb-210+D , fish	3.000E+02	3.000E+02	BIOFAC(3,1)
D-5	Pb-210+D , crustacea and mollusks	1.000E+02	1.000E+02	BIOFAC(3,2)

Dose Conversion Factor (and Related) Parameter Summary (continued)
Dose Library: FGR 12 & FGR 11

Menu	Parameter	Current Value#	Base Case*	Parameter Name
D-5	Ra-226+D , fish	5.000E+01	5.000E+01	BIOFAC(4,1)
D-5	Ra-226+D , crustacea and mollusks	2.500E+02	2.500E+02	BIOFAC(4,2)
D-5				
D-5	Th-230 , fish	1.000E+02	1.000E+02	BIOFAC(5,1)
D-5	Th-230 , crustacea and mollusks	5.000E+02	5.000E+02	BIOFAC(5,2)
D-5				
D-5	U-234 , fish	1.000E+01	1.000E+01	BIOFAC(6,1)
D-5	U-234 , crustacea and mollusks	6.000E+01	6.000E+01	BIOFAC(6,2)
D-5				
D-5	U-235+D , fish	1.000E+01	1.000E+01	BIOFAC(7,1)
D-5	U-235+D , crustacea and mollusks	6.000E+01	6.000E+01	BIOFAC(7,2)
D-5				
D-5	U-238 , fish	1.000E+01	1.000E+01	BIOFAC(8,1)
D-5	U-238 , crustacea and mollusks	6.000E+01	6.000E+01	BIOFAC(8,2)
D-5				
D-5	U-238+D , fish	1.000E+01	1.000E+01	BIOFAC(9,1)
D-5	U-238+D , crustacea and mollusks	6.000E+01	6.000E+01	BIOFAC(9,2)

#For DCF1(xxx) only, factors are for infinite depth & area. See ETFG table in Ground Pathway of Detailed Report.
*Base Case means Default.Lib w/o Associate Nuclide contributions.

Site-Specific Parameter Summary

Menu	Parameter	User Input	Default	Used by RESRAD (If different from user input)	Parameter Name
R011	Area of contaminated zone (m**2)	8.822E+04	1.000E+04	---	AREA
R011	Thickness of contaminated zone (m)	3.360E+01	2.000E+00	---	THICK0
R011	Fraction of contamination that is submerged	0.000E+00	0.000E+00	---	SUBMFRACT
R011	Length parallel to aquifer flow (m)	5.820E+02	1.000E+02	---	LCZPAQ
R011	Basic radiation dose limit (mrem/yr)	2.500E+01	3.000E+01	---	BRDL
R011	Time since placement of material (yr)	0.000E+00	0.000E+00	---	TI
R011	Times for calculations (yr)	1.000E+00	1.000E+00	---	T(2)
R011	Times for calculations (yr)	3.000E+00	3.000E+00	---	T(3)
R011	Times for calculations (yr)	1.000E+01	1.000E+01	---	T(4)
R011	Times for calculations (yr)	3.000E+01	3.000E+01	---	T(5)
R011	Times for calculations (yr)	1.000E+02	1.000E+02	---	T(6)
R011	Times for calculations (yr)	3.000E+02	3.000E+02	---	T(7)
R011	Times for calculations (yr)	1.000E+03	1.000E+03	---	T(8)
R011	Times for calculations (yr)	not used	0.000E+00	---	T(9)
R011	Times for calculations (yr)	not used	0.000E+00	---	T(10)
R012	Initial principal radionuclide (pCi/g): U-234	3.700E-03	0.000E+00	---	S1(6)
R012	Initial principal radionuclide (pCi/g): U-235	1.700E-04	0.000E+00	---	S1(7)
R012	Initial principal radionuclide (pCi/g): U-238	1.000E-02	0.000E+00	---	S1(8)
R012	Concentration in groundwater (pCi/L): U-234	not used	0.000E+00	---	W1(6)
R012	Concentration in groundwater (pCi/L): U-235	not used	0.000E+00	---	W1(7)
R012	Concentration in groundwater (pCi/L): U-238	not used	0.000E+00	---	W1(8)
R013	Cover depth (m)	3.600E+00	0.000E+00	---	COVER0
R013	Density of cover material (g/cm**3)	1.780E+00	1.500E+00	---	DENSCV
R013	Cover depth erosion rate (m/yr)	1.000E-04	1.000E-03	---	VCV
R013	Density of contaminated zone (g/cm**3)	1.500E+00	1.500E+00	---	DENSCZ
R013	Contaminated zone erosion rate (m/yr)	1.000E-03	1.000E-03	---	VCZ
R013	Contaminated zone total porosity	4.000E-01	4.000E-01	---	TPCZ
R013	Contaminated zone field capacity	2.000E-01	2.000E-01	---	FCCZ
R013	Contaminated zone hydraulic conductivity (m/yr)	5.000E+01	1.000E+01	---	HCCZ
R013	Contaminated zone b parameter	5.300E+00	5.300E+00	---	BCZ
R013	Average annual wind speed (m/sec)	2.000E+00	2.000E+00	---	WIND
R013	Humidity in air (g/m**3)	not used	8.000E+00	---	HUMID
R013	Evapotranspiration coefficient	7.500E-01	5.000E-01	---	EVAPTR
R013	Precipitation (m/yr)	1.840E-01	1.000E+00	---	PRECIP
R013	Irrigation (m/yr)	2.000E-01	2.000E-01	---	RI
R013	Irrigation mode	overhead	overhead	---	IDITCH
R013	Runoff coefficient	2.000E-01	2.000E-01	---	RUNOFF
R013	Watershed area for nearby stream or pond (m**2)	1.000E+06	1.000E+06	---	WAREA
R013	Accuracy for water/soil computations	1.000E-03	1.000E-03	---	EPS
R014	Density of saturated zone (g/cm**3)	1.500E+00	1.500E+00	---	DENSAQ
R014	Saturated zone total porosity	4.300E-01	4.000E-01	---	TPSZ
R014	Saturated zone effective porosity	4.000E-01	2.000E-01	---	EPSZ
R014	Saturated zone field capacity	4.000E-01	2.000E-01	---	FCSZ
R014	Saturated zone hydraulic conductivity (m/yr)	2.500E+01	1.000E+02	---	HCSZ
R014	Saturated zone hydraulic gradient	1.000E-02	2.000E-02	---	HGWT
R014	Saturated zone b parameter	5.000E+00	5.300E+00	---	BSZ
R014	Water table drop rate (m/yr)	1.000E-03	1.000E-03	---	VWT

Site-Specific Parameter Summary (continued)

Menu	Parameter	User Input	Default	Used by RESRAD (If different from user input)	Parameter Name
R014	Well pump intake depth (m below water table)	1.000E+01	1.000E+01	---	DWIBWT
R014	Model: Nondispersion (ND) or Mass-Balance (MB)	ND	ND	---	MODEL
R014	Well pumping rate (m**3/yr	2.500E+02	2.500E+02	---	UW
R015	Number of unsaturated zone strata	5	1	---	NS
R015	Unsat. zone 1, thickness (m)	1.000E+00	4.000E+00	---	H(1)
R015	Unsat. zone 1, soil density (g/cm**3)	1.630E+00	1.500E+00	---	DENSUZ(1)
R015	Unsat. zone 1, total porosity	5.200E-01	4.000E-01	---	TPUZ(1)
R015	Unsat. zone 1, effective porosity	1.000E-01	2.000E-01	---	EPUZ(1)
R015	Unsat. zone 1, field capacity	4.500E-01	2.000E-01	---	FCUZ(1)
R015	Unsat. zone 1, soil-specific b parameter	1.100E+01	5.300E+00	---	BUZ(1)
R015	Unsat. zone 1, hydraulic conductivity (m/yr)	1.500E-02	1.000E+01	---	HCUZ(1)
R015	Unsat. zone 2, thickness (m)	4.600E+00	0.000E+00	---	H(2)
R015	Unsat. zone 2, soil density (g/cm**3)	1.690E+00	1.500E+00	---	DENSUZ(2)
R015	Unsat. zone 2, total porosity	3.400E-01	4.000E-01	---	TPUZ(2)
R015	Unsat. zone 2, effective porosity	3.300E-01	2.000E-01	---	EPUZ(2)
R015	Unsat. zone 2, field capacity	7.000E-02	2.000E-01	---	FCUZ(2)
R015	Unsat. zone 2, soil-specific b parameter	2.000E+00	5.300E+00	---	BUZ(2)
R015	Unsat. zone 2, hydraulic conductivity (m/yr)	2.200E+03	1.000E+01	---	HCUZ(2)
R015	Unsat. zone 3, thickness (m)	2.130E+01	0.000E+00	---	H(3)
R015	Unsat. zone 3, soil density (g/cm**3)	1.300E+00	1.500E+00	---	DENSUZ(3)
R015	Unsat. zone 3, total porosity	5.200E-01	4.000E-01	---	TPUZ(3)
R015	Unsat. zone 3, effective porosity	4.000E-01	2.000E-01	---	EPUZ(3)
R015	Unsat. zone 3, field capacity	4.900E-01	2.000E-01	---	FCUZ(3)
R015	Unsat. zone 3, soil-specific b parameter	3.000E+00	5.300E+00	---	BUZ(3)
R015	Unsat. zone 3, hydraulic conductivity (m/yr)	9.000E+02	1.000E+01	---	HCUZ(3)
R015	Unsat. zone 4, thickness (m)	1.680E+01	0.000E+00	---	H(4)
R015	Unsat. zone 4, soil density (g/cm**3)	1.310E+00	1.500E+00	---	DENSUZ(4)
R015	Unsat. zone 4, total porosity	4.900E-01	4.000E-01	---	TPUZ(4)
R015	Unsat. zone 4, effective porosity	4.300E-01	2.000E-01	---	EPUZ(4)
R015	Unsat. zone 4, field capacity	4.800E-01	2.000E-01	---	FCUZ(4)
R015	Unsat. zone 4, soil-specific b parameter	5.000E+00	5.300E+00	---	BUZ(4)
R015	Unsat. zone 4, hydraulic conductivity (m/yr)	6.000E+01	1.000E+01	---	HCUZ(4)
R015	Unsat. zone 5, thickness (m)	1.220E+01	0.000E+00	---	H(5)
R015	Unsat. zone 5, soil density (g/cm**3)	1.500E+00	1.500E+00	---	DENSUZ(5)
R015	Unsat. zone 5, total porosity	5.200E-01	4.000E-01	---	TPUZ(5)
R015	Unsat. zone 5, effective porosity	1.500E-01	2.000E-01	---	EPUZ(5)
R015	Unsat. zone 5, field capacity	3.200E-01	2.000E-01	---	FCUZ(5)
R015	Unsat. zone 5, soil-specific b parameter	8.000E+00	5.300E+00	---	BUZ(5)
R015	Unsat. zone 5, hydraulic conductivity (m/yr)	1.000E-01	1.000E+01	---	HCUZ(5)

Site-Specific Parameter Summary (continued)

Menu	Parameter	User Input	Default	Used by RESRAD (If different from user input)	Parameter Name
R016	Distribution coefficients for U-234				
R016	Contaminated zone (cm**3/g)	3.500E+01	5.000E+01	---	DCNUCC(6)
R016	Unsaturated zone 1 (cm**3/g)	1.600E+03	5.000E+01	---	DCNUCU(6,1)
R016	Unsaturated zone 2 (cm**3/g)	3.500E+01	5.000E+01	---	DCNUCU(6,2)
R016	Unsaturated zone 3 (cm**3/g)	3.500E+01	5.000E+01	---	DCNUCU(6,3)
R016	Unsaturated zone 4 (cm**3/g)	3.500E+01	5.000E+01	---	DCNUCU(6,4)
R016	Unsaturated zone 5 (cm**3/g)	3.500E+01	5.000E+01	---	DCNUCU(6,5)
R016	Saturated zone (cm**3/g)	3.500E+01	5.000E+01	---	DCNUCS(6)
R016	Leach rate (/yr)	0.000E+00	0.000E+00	4.897E-05	ALEACH(6)
R016	Solubility constant	0.000E+00	0.000E+00	not used	SOLUBK(6)
R016	Distribution coefficients for U-235				
R016	Contaminated zone (cm**3/g)	3.500E+01	5.000E+01	---	DCNUCC(7)
R016	Unsaturated zone 1 (cm**3/g)	1.600E+03	5.000E+01	---	DCNUCU(7,1)
R016	Unsaturated zone 2 (cm**3/g)	3.500E+01	5.000E+01	---	DCNUCU(7,2)
R016	Unsaturated zone 3 (cm**3/g)	3.500E+01	5.000E+01	---	DCNUCU(7,3)
R016	Unsaturated zone 4 (cm**3/g)	3.500E+01	5.000E+01	---	DCNUCU(7,4)
R016	Unsaturated zone 5 (cm**3/g)	3.500E+01	5.000E+01	---	DCNUCU(7,5)
R016	Saturated zone (cm**3/g)	3.500E+01	5.000E+01	---	DCNUCS(7)
R016	Leach rate (/yr)	0.000E+00	0.000E+00	4.897E-05	ALEACH(7)
R016	Solubility constant	0.000E+00	0.000E+00	not used	SOLUBK(7)
R016	Distribution coefficients for U-238				
R016	Contaminated zone (cm**3/g)	3.500E+01	5.000E+01	---	DCNUCC(8)
R016	Unsaturated zone 1 (cm**3/g)	1.600E+03	5.000E+01	---	DCNUCU(8,1)
R016	Unsaturated zone 2 (cm**3/g)	3.500E+01	5.000E+01	---	DCNUCU(8,2)
R016	Unsaturated zone 3 (cm**3/g)	3.500E+01	5.000E+01	---	DCNUCU(8,3)
R016	Unsaturated zone 4 (cm**3/g)	3.500E+01	5.000E+01	---	DCNUCU(8,4)
R016	Unsaturated zone 5 (cm**3/g)	3.500E+01	5.000E+01	---	DCNUCU(8,5)
R016	Saturated zone (cm**3/g)	3.500E+01	5.000E+01	---	DCNUCS(8)
R016	Leach rate (/yr)	0.000E+00	0.000E+00	4.897E-05	ALEACH(8)
R016	Solubility constant	0.000E+00	0.000E+00	not used	SOLUBK(8)
R016	Distribution coefficients for daughter Ac-227				
R016	Contaminated zone (cm**3/g)	2.000E+01	2.000E+01	---	DCNUCC(1)
R016	Unsaturated zone 1 (cm**3/g)	2.000E+01	2.000E+01	---	DCNUCU(1,1)
R016	Unsaturated zone 2 (cm**3/g)	2.000E+01	2.000E+01	---	DCNUCU(1,2)
R016	Unsaturated zone 3 (cm**3/g)	2.000E+01	2.000E+01	---	DCNUCU(1,3)
R016	Unsaturated zone 4 (cm**3/g)	2.000E+01	2.000E+01	---	DCNUCU(1,4)
R016	Unsaturated zone 5 (cm**3/g)	2.000E+01	2.000E+01	---	DCNUCU(1,5)
R016	Saturated zone (cm**3/g)	2.000E+01	2.000E+01	---	DCNUCS(1)
R016	Leach rate (/yr)	0.000E+00	0.000E+00	8.540E-05	ALEACH(1)
R016	Solubility constant	0.000E+00	0.000E+00	not used	SOLUBK(1)

Site-Specific Parameter Summary (continued)

Menu	Parameter	User Input	Default	Used by RESRAD (If different from user input)	Parameter Name
R016	Distribution coefficients for daughter Pa-231				
R016	Contaminated zone (cm**3/g)	5.000E+01	5.000E+01	---	DCNUCC(2)
R016	Unsaturated zone 1 (cm**3/g)	5.000E+01	5.000E+01	---	DCNUCU(2,1)
R016	Unsaturated zone 2 (cm**3/g)	5.000E+01	5.000E+01	---	DCNUCU(2,2)
R016	Unsaturated zone 3 (cm**3/g)	5.000E+01	5.000E+01	---	DCNUCU(2,3)
R016	Unsaturated zone 4 (cm**3/g)	5.000E+01	5.000E+01	---	DCNUCU(2,4)
R016	Unsaturated zone 5 (cm**3/g)	5.000E+01	5.000E+01	---	DCNUCU(2,5)
R016	Saturated zone (cm**3/g)	5.000E+01	5.000E+01	---	DCNUCS(2)
R016	Leach rate (/yr)	0.000E+00	0.000E+00	3.433E-05	ALEACH(2)
R016	Solubility constant	0.000E+00	0.000E+00	not used	SOLUBK(2)
R016	Distribution coefficients for daughter Pb-210				
R016	Contaminated zone (cm**3/g)	1.000E+02	1.000E+02	---	DCNUCC(3)
R016	Unsaturated zone 1 (cm**3/g)	1.000E+02	1.000E+02	---	DCNUCU(3,1)
R016	Unsaturated zone 2 (cm**3/g)	1.000E+02	1.000E+02	---	DCNUCU(3,2)
R016	Unsaturated zone 3 (cm**3/g)	1.000E+02	1.000E+02	---	DCNUCU(3,3)
R016	Unsaturated zone 4 (cm**3/g)	1.000E+02	1.000E+02	---	DCNUCU(3,4)
R016	Unsaturated zone 5 (cm**3/g)	1.000E+02	1.000E+02	---	DCNUCU(3,5)
R016	Saturated zone (cm**3/g)	1.000E+02	1.000E+02	---	DCNUCS(3)
R016	Leach rate (/yr)	0.000E+00	0.000E+00	1.719E-05	ALEACH(3)
R016	Solubility constant	0.000E+00	0.000E+00	not used	SOLUBK(3)
R016	Distribution coefficients for daughter Ra-226				
R016	Contaminated zone (cm**3/g)	7.000E+01	7.000E+01	---	DCNUCC(4)
R016	Unsaturated zone 1 (cm**3/g)	7.000E+01	7.000E+01	---	DCNUCU(4,1)
R016	Unsaturated zone 2 (cm**3/g)	7.000E+01	7.000E+01	---	DCNUCU(4,2)
R016	Unsaturated zone 3 (cm**3/g)	7.000E+01	7.000E+01	---	DCNUCU(4,3)
R016	Unsaturated zone 4 (cm**3/g)	7.000E+01	7.000E+01	---	DCNUCU(4,4)
R016	Unsaturated zone 5 (cm**3/g)	7.000E+01	7.000E+01	---	DCNUCU(4,5)
R016	Saturated zone (cm**3/g)	7.000E+01	7.000E+01	---	DCNUCS(4)
R016	Leach rate (/yr)	0.000E+00	0.000E+00	2.454E-05	ALEACH(4)
R016	Solubility constant	0.000E+00	0.000E+00	not used	SOLUBK(4)
R016	Distribution coefficients for daughter Th-230				
R016	Contaminated zone (cm**3/g)	6.000E+04	6.000E+04	---	DCNUCC(5)
R016	Unsaturated zone 1 (cm**3/g)	6.000E+04	6.000E+04	---	DCNUCU(5,1)
R016	Unsaturated zone 2 (cm**3/g)	6.000E+04	6.000E+04	---	DCNUCU(5,2)
R016	Unsaturated zone 3 (cm**3/g)	6.000E+04	6.000E+04	---	DCNUCU(5,3)
R016	Unsaturated zone 4 (cm**3/g)	6.000E+04	6.000E+04	---	DCNUCU(5,4)
R016	Unsaturated zone 5 (cm**3/g)	6.000E+04	6.000E+04	---	DCNUCU(5,5)
R016	Saturated zone (cm**3/g)	6.000E+04	6.000E+04	---	DCNUCS(5)
R016	Leach rate (/yr)	0.000E+00	0.000E+00	2.870E-08	ALEACH(5)
R016	Solubility constant	0.000E+00	0.000E+00	not used	SOLUBK(5)
R017	Inhalation rate (m**3/yr)	8.400E+03	8.400E+03	---	INHALR
R017	Mass loading for inhalation (g/m**3)	1.000E-04	1.000E-04	---	MLINH
R017	Exposure duration	3.000E+01	3.000E+01	---	ED
R017	Shielding factor, inhalation	4.000E-01	4.000E-01	---	SHF3
R017	Shielding factor, external gamma	7.000E-01	7.000E-01	---	SHF1
R017	Fraction of time spent indoors	5.000E-01	5.000E-01	---	FIND

Site-Specific Parameter Summary (continued)

Menu	Parameter	User Input	Default	Used by RESRAD (If different from user input)	Parameter Name
R017	Fraction of time spent outdoors (on site)	2.500E-01	2.500E-01	---	FOTD
R017	Shape factor flag, external gamma	1.000E+00	1.000E+00	>0 shows circular AREA.	FS
R017	Radii of shape factor array (used if FS = -1):				
R017	Outer annular radius (m), ring 1:	not used	5.000E+01	---	RAD_SHAPE(1)
R017	Outer annular radius (m), ring 2:	not used	7.071E+01	---	RAD_SHAPE(2)
R017	Outer annular radius (m), ring 3:	not used	0.000E+00	---	RAD_SHAPE(3)
R017	Outer annular radius (m), ring 4:	not used	0.000E+00	---	RAD_SHAPE(4)
R017	Outer annular radius (m), ring 5:	not used	0.000E+00	---	RAD_SHAPE(5)
R017	Outer annular radius (m), ring 6:	not used	0.000E+00	---	RAD_SHAPE(6)
R017	Outer annular radius (m), ring 7:	not used	0.000E+00	---	RAD_SHAPE(7)
R017	Outer annular radius (m), ring 8:	not used	0.000E+00	---	RAD_SHAPE(8)
R017	Outer annular radius (m), ring 9:	not used	0.000E+00	---	RAD_SHAPE(9)
R017	Outer annular radius (m), ring 10:	not used	0.000E+00	---	RAD_SHAPE(10)
R017	Outer annular radius (m), ring 11:	not used	0.000E+00	---	RAD_SHAPE(11)
R017	Outer annular radius (m), ring 12:	not used	0.000E+00	---	RAD_SHAPE(12)
R017	Fractions of annular areas within AREA:				
R017	Ring 1	not used	1.000E+00	---	FRACA(1)
R017	Ring 2	not used	2.732E-01	---	FRACA(2)
R017	Ring 3	not used	0.000E+00	---	FRACA(3)
R017	Ring 4	not used	0.000E+00	---	FRACA(4)
R017	Ring 5	not used	0.000E+00	---	FRACA(5)
R017	Ring 6	not used	0.000E+00	---	FRACA(6)
R017	Ring 7	not used	0.000E+00	---	FRACA(7)
R017	Ring 8	not used	0.000E+00	---	FRACA(8)
R017	Ring 9	not used	0.000E+00	---	FRACA(9)
R017	Ring 10	not used	0.000E+00	---	FRACA(10)
R017	Ring 11	not used	0.000E+00	---	FRACA(11)
R017	Ring 12	not used	0.000E+00	---	FRACA(12)
R018	Fruits, vegetables and grain consumption (kg/yr)	1.600E+02	1.600E+02	---	DIET(1)
R018	Leafy vegetable consumption (kg/yr)	1.400E+01	1.400E+01	---	DIET(2)
R018	Milk consumption (L/yr)	9.200E+01	9.200E+01	---	DIET(3)
R018	Meat and poultry consumption (kg/yr)	6.300E+01	6.300E+01	---	DIET(4)
R018	Fish consumption (kg/yr)	not used	5.400E+00	---	DIET(5)
R018	Other seafood consumption (kg/yr)	not used	9.000E-01	---	DIET(6)
R018	Soil ingestion rate (g/yr)	3.650E+01	3.650E+01	---	SOIL
R018	Drinking water intake (L/yr)	5.100E+02	5.100E+02	---	DWI
R018	Contamination fraction of drinking water	1.000E+00	1.000E+00	---	FDW
R018	Contamination fraction of household water	1.000E+00	1.000E+00	---	FHHW
R018	Contamination fraction of livestock water	1.000E+00	1.000E+00	---	FLW
R018	Contamination fraction of irrigation water	1.000E+00	1.000E+00	---	FIRW
R018	Contamination fraction of aquatic food	not used	5.000E-01	---	FR9
R018	Contamination fraction of plant food	-1	-1	0.500E+00	FPLANT
R018	Contamination fraction of meat	-1	-1	0.100E+01	FMEAT
R018	Contamination fraction of milk	-1	-1	0.100E+01	FMILK
R019	Livestock fodder intake for meat (kg/day)	6.800E+01	6.800E+01	---	LFI5
R019	Livestock fodder intake for milk (kg/day)	5.500E+01	5.500E+01	---	LFI6
R019	Livestock water intake for meat (L/day)	5.000E+01	5.000E+01	---	LWI5

Site-Specific Parameter Summary (continued)

Menu	Parameter	User Input	Default	Used by RESRAD (If different from user input)	Parameter Name
R019	Livestock water intake for milk (L/day)	1.600E+02	1.600E+02	---	LWI6
R019	Livestock soil intake (kg/day)	5.000E-01	5.000E-01	---	LSI
R019	Mass loading for foliar deposition (g/m**3)	1.000E-04	1.000E-04	---	MLFD
R019	Depth of soil mixing layer (m)	1.500E-01	1.500E-01	---	DM
R019	Depth of roots (m)	9.000E-01	9.000E-01	---	DROOT
R019	Drinking water fraction from ground water	1.000E+00	1.000E+00	---	FGWDW
R019	Household water fraction from ground water	1.000E+00	1.000E+00	---	FGWHH
R019	Livestock water fraction from ground water	1.000E+00	1.000E+00	---	FGWLW
R019	Irrigation fraction from ground water	1.000E+00	1.000E+00	---	FGWIR
R19B	Wet weight crop yield for Non-Leafy (kg/m**2)	7.000E-01	7.000E-01	---	YV(1)
R19B	Wet weight crop yield for Leafy (kg/m**2)	1.500E+00	1.500E+00	---	YV(2)
R19B	Wet weight crop yield for Fodder (kg/m**2)	1.100E+00	1.100E+00	---	YV(3)
R19B	Growing Season for Non-Leafy (years)	1.700E-01	1.700E-01	---	TE(1)
R19B	Growing Season for Leafy (years)	2.500E-01	2.500E-01	---	TE(2)
R19B	Growing Season for Fodder (years)	8.000E-02	8.000E-02	---	TE(3)
R19B	Translocation Factor for Non-Leafy	1.000E-01	1.000E-01	---	TIV(1)
R19B	Translocation Factor for Leafy	1.000E+00	1.000E+00	---	TIV(2)
R19B	Translocation Factor for Fodder	1.000E+00	1.000E+00	---	TIV(3)
R19B	Dry Foliar Interception Fraction for Non-Leafy	2.500E-01	2.500E-01	---	RDRY(1)
R19B	Dry Foliar Interception Fraction for Leafy	2.500E-01	2.500E-01	---	RDRY(2)
R19B	Dry Foliar Interception Fraction for Fodder	2.500E-01	2.500E-01	---	RDRY(3)
R19B	Wet Foliar Interception Fraction for Non-Leafy	2.500E-01	2.500E-01	---	RWET(1)
R19B	Wet Foliar Interception Fraction for Leafy	2.500E-01	2.500E-01	---	RWET(2)
R19B	Wet Foliar Interception Fraction for Fodder	2.500E-01	2.500E-01	---	RWET(3)
R19B	Weathering Removal Constant for Vegetation	2.000E+01	2.000E+01	---	WLAM
C14	C-12 concentration in water (g/cm**3)	not used	2.000E-05	---	C12WTR
C14	C-12 concentration in contaminated soil (g/g)	not used	3.000E-02	---	C12CZ
C14	Fraction of vegetation carbon from soil	not used	2.000E-02	---	CSOIL
C14	Fraction of vegetation carbon from air	not used	9.800E-01	---	CAIR
C14	C-14 evasion layer thickness in soil (m)	not used	3.000E-01	---	DMC
C14	C-14 evasion flux rate from soil (1/sec)	not used	7.000E-07	---	EVSN
C14	C-12 evasion flux rate from soil (1/sec)	not used	1.000E-10	---	REVSN
C14	Fraction of grain in beef cattle feed	not used	8.000E-01	---	AVFG4
C14	Fraction of grain in milk cow feed	not used	2.000E-01	---	AVFG5
STOR	Storage times of contaminated foodstuffs (days):				
STOR	Fruits, non-leafy vegetables, and grain	1.400E+01	1.400E+01	---	STOR_T(1)
STOR	Leafy vegetables	1.000E+00	1.000E+00	---	STOR_T(2)
STOR	Milk	1.000E+00	1.000E+00	---	STOR_T(3)
STOR	Meat and poultry	2.000E+01	2.000E+01	---	STOR_T(4)
STOR	Fish	7.000E+00	7.000E+00	---	STOR_T(5)
STOR	Crustacea and mollusks	7.000E+00	7.000E+00	---	STOR_T(6)
STOR	Well water	1.000E+00	1.000E+00	---	STOR_T(7)
STOR	Surface water	1.000E+00	1.000E+00	---	STOR_T(8)
STOR	Livestock fodder	4.500E+01	4.500E+01	---	STOR_T(9)
R021	Thickness of building foundation (m)	1.500E-01	1.500E-01	---	FLOOR1
R021	Bulk density of building foundation (g/cm**3)	2.400E+00	2.400E+00	---	DENSFL

Site-Specific Parameter Summary (continued)

Menu	Parameter	User Input	Default	Used by RESRAD (If different from user input)	Parameter Name
R021	Total porosity of the cover material	4.130E-01	4.000E-01	---	TPCV
R021	Total porosity of the building foundation	1.000E-01	1.000E-01	---	TPFL
R021	Volumetric water content of the cover material	2.650E-02	5.000E-02	---	PH2OCV
R021	Volumetric water content of the foundation	3.000E-02	3.000E-02	---	PH2OFL
R021	Diffusion coefficient for radon gas (m/sec):				
R021	in cover material	7.233E-07	2.000E-06	---	DIFCV
R021	in foundation material	3.000E-07	3.000E-07	---	DIFFL
R021	in contaminated zone soil	3.000E-07	2.000E-06	---	DIFCZ
R021	Radon vertical dimension of mixing (m)	2.000E+00	2.000E+00	---	HMIX
R021	Average building air exchange rate (1/hr)	1.500E+00	5.000E-01	---	REXG
R021	Height of the building (room) (m)	2.500E+00	2.500E+00	---	HRM
R021	Building interior area factor	1.000E+00	0.000E+00	---	FAI
R021	Building depth below ground surface (m)	0.000E+00	-1.000E+00	---	DMFL
R021	Emanating power of Rn-222 gas	2.500E-01	2.500E-01	---	EMANA(1)
R021	Emanating power of Rn-220 gas	not used	1.500E-01	---	EMANA(2)
TITL	Number of graphical time points	512	---	---	NPTS
TITL	Maximum number of integration points for dose	17	---	---	LYMAX
TITL	Maximum number of integration points for risk	1	---	---	KYMAX

Summary of Pathway Selections

Pathway	User Selection
1 -- external gamma	active
2 -- inhalation (w/o radon)	active
3 -- plant ingestion	active
4 -- meat ingestion	active
5 -- milk ingestion	active
6 -- aquatic foods	suppressed
7 -- drinking water	active
8 -- soil ingestion	active
9 -- radon	active
Find peak pathway doses	active

Contaminated Zone Dimensions		Initial Soil Concentrations, pCi/g	
Area:	88221.00 square meters	U-234	3.700E-03
Thickness:	33.60 meters	U-235	1.700E-04
Cover Depth:	3.60 meters	U-238	1.000E-02

Total Dose TDOSE(t), mrem/yr
Basic Radiation Dose Limit = 2.500E+01 mrem/yr
Total Mixture Sum M(t) = Fraction of Basic Dose Limit Received at Time (t)

t (years):	0.000E+00	1.000E+00	3.000E+00	1.000E+01	3.000E+01	1.000E+02	3.000E+02	1.000E+03
TDOSE(t):	4.664E-14	3.265E-13	1.726E-12	1.544E-11	1.302E-10	1.413E-09	1.264E-08	1.415E-07
M(t):	1.866E-15	1.306E-14	6.903E-14	6.176E-13	5.207E-12	5.653E-11	5.056E-10	5.661E-09

Maximum TDOSE(t): 1.415E-07 mrem/yr at t = 1.000E+03 years

Total Dose Contributions TDOSE(i,p,t) for Individual Radionuclides (i) and Pathways (p)
As mrem/yr and Fraction of Total Dose At t = 0.000E+00 years

Water Independent Pathways (Inhalation excludes radon)

Radio-	Ground		Inhalation		Radon		Plant		Meat		Milk		Soil	
Nuclide	mrem/yr	fract.	mrem/yr	fract.	mrem/yr	fract.	mrem/yr	fract.	mrem/yr	fract.	mrem/yr	fract.	mrem/yr	fract.
U-234	1.736E-32	0.0000	0.000E+00	0.0000	4.664E-14	1.0000	0.000E+00	0.0000	0.000E+00	0.0000	0.000E+00	0.0000	0.000E+00	0.0000
U-235	0.000E+00	0.0000	0.000E+00	0.0000	0.000E+00	0.0000	0.000E+00	0.0000	0.000E+00	0.0000	0.000E+00	0.0000	0.000E+00	0.0000
U-238	9.099E-29	0.0000	0.000E+00	0.0000	8.934E-20	0.0000	0.000E+00	0.0000	0.000E+00	0.0000	0.000E+00	0.0000	0.000E+00	0.0000
Total	9.101E-29	0.0000	0.000E+00	0.0000	4.664E-14	1.0000	0.000E+00	0.0000	0.000E+00	0.0000	0.000E+00	0.0000	0.000E+00	0.0000

Total Dose Contributions TDOSE(i,p,t) for Individual Radionuclides (i) and Pathways (p)
As mrem/yr and Fraction of Total Dose At t = 0.000E+00 years

Water Dependent Pathways

Radio-	Water		Fish		Radon		Plant		Meat		Milk		All Pathways*	
Nuclide	mrem/yr	fract.	mrem/yr	fract.	mrem/yr	fract.	mrem/yr	fract.	mrem/yr	fract.	mrem/yr	fract.	mrem/yr	fract.
U-234	0.000E+00	0.0000	0.000E+00	0.0000	0.000E+00	0.0000	0.000E+00	0.0000	0.000E+00	0.0000	0.000E+00	0.0000	4.664E-14	1.0000
U-235	0.000E+00	0.0000	0.000E+00	0.0000	0.000E+00	0.0000	0.000E+00	0.0000	0.000E+00	0.0000	0.000E+00	0.0000	0.000E+00	0.0000
U-238	0.000E+00	0.0000	0.000E+00	0.0000	0.000E+00	0.0000	0.000E+00	0.0000	0.000E+00	0.0000	0.000E+00	0.0000	8.934E-20	0.0000
Total	0.000E+00	0.0000	0.000E+00	0.0000	0.000E+00	0.0000	0.000E+00	0.0000	0.000E+00	0.0000	0.000E+00	0.0000	4.664E-14	1.0000

*Sum of all water independent and dependent pathways.

Total Dose Contributions TDOSE(i,p,t) for Individual Radionuclides (i) and Pathways (p)
As mrem/yr and Fraction of Total Dose At t = 1.000E+00 years

Water Independent Pathways (Inhalation excludes radon)

Radio-	Ground		Inhalation		Radon		Plant		Meat		Milk		Soil	
Nuclide	mrem/yr	fract.	mrem/yr	fract.	mrem/yr	fract.	mrem/yr	fract.	mrem/yr	fract.	mrem/yr	fract.	mrem/yr	fract.
U-234	1.216E-31	0.0000	0.000E+00	0.0000	3.265E-13	1.0000	0.000E+00	0.0000	0.000E+00	0.0000	0.000E+00	0.0000	0.000E+00	0.0000
U-235	0.000E+00	0.0000	0.000E+00	0.0000	0.000E+00	0.0000	0.000E+00	0.0000	0.000E+00	0.0000	0.000E+00	0.0000	0.000E+00	0.0000
U-238	9.113E-29	0.0000	0.000E+00	0.0000	1.340E-18	0.0000	0.000E+00	0.0000	0.000E+00	0.0000	0.000E+00	0.0000	0.000E+00	0.0000
Total	9.125E-29	0.0000	0.000E+00	0.0000	3.265E-13	1.0000	0.000E+00	0.0000	0.000E+00	0.0000	0.000E+00	0.0000	0.000E+00	0.0000

Total Dose Contributions TDOSE(i,p,t) for Individual Radionuclides (i) and Pathways (p)
As mrem/yr and Fraction of Total Dose At t = 1.000E+00 years

Water Dependent Pathways

Radio-	Water		Fish		Radon		Plant		Meat		Milk		All Pathways*	
Nuclide	mrem/yr	fract.	mrem/yr	fract.	mrem/yr	fract.	mrem/yr	fract.	mrem/yr	fract.	mrem/yr	fract.	mrem/yr	fract.
U-234	0.000E+00	0.0000	0.000E+00	0.0000	0.000E+00	0.0000	0.000E+00	0.0000	0.000E+00	0.0000	0.000E+00	0.0000	3.265E-13	1.0000
U-235	0.000E+00	0.0000	0.000E+00	0.0000	0.000E+00	0.0000	0.000E+00	0.0000	0.000E+00	0.0000	0.000E+00	0.0000	0.000E+00	0.0000
U-238	0.000E+00	0.0000	0.000E+00	0.0000	0.000E+00	0.0000	0.000E+00	0.0000	0.000E+00	0.0000	0.000E+00	0.0000	1.340E-18	0.0000
Total	0.000E+00	0.0000	0.000E+00	0.0000	0.000E+00	0.0000	0.000E+00	0.0000	0.000E+00	0.0000	0.000E+00	0.0000	3.265E-13	1.0000

*Sum of all water independent and dependent pathways.

Total Dose Contributions TDOSE(i,p,t) for Individual Radionuclides (i) and Pathways (p)
As mrem/yr and Fraction of Total Dose At t = 3.000E+00 years

Water Independent Pathways (Inhalation excludes radon)

Radio-	Ground		Inhalation		Radon		Plant		Meat		Milk		Soil	
Nuclide	mrem/yr	fract.	mrem/yr	fract.	mrem/yr	fract.	mrem/yr	fract.	mrem/yr	fract.	mrem/yr	fract.	mrem/yr	fract.
U-234	6.443E-31	0.0000	0.000E+00	0.0000	1.726E-12	1.0000	0.000E+00	0.0000	0.000E+00	0.0000	0.000E+00	0.0000	0.000E+00	0.0000
U-235	0.000E+00	0.0000	0.000E+00	0.0000	0.000E+00	0.0000	0.000E+00	0.0000	0.000E+00	0.0000	0.000E+00	0.0000	0.000E+00	0.0000
U-238	9.141E-29	0.0000	0.000E+00	0.0000	1.564E-17	0.0000	0.000E+00	0.0000	0.000E+00	0.0000	0.000E+00	0.0000	0.000E+00	0.0000
Total	9.206E-29	0.0000	0.000E+00	0.0000	1.726E-12	1.0000	0.000E+00	0.0000	0.000E+00	0.0000	0.000E+00	0.0000	0.000E+00	0.0000

Total Dose Contributions TDOSE(i,p,t) for Individual Radionuclides (i) and Pathways (p)
As mrem/yr and Fraction of Total Dose At t = 3.000E+00 years

Water Dependent Pathways

Radio-	Water		Fish		Radon		Plant		Meat		Milk		All Pathways*	
Nuclide	mrem/yr	fract.	mrem/yr	fract.	mrem/yr	fract.	mrem/yr	fract.	mrem/yr	fract.	mrem/yr	fract.	mrem/yr	fract.
U-234	0.000E+00	0.0000	0.000E+00	0.0000	0.000E+00	0.0000	0.000E+00	0.0000	0.000E+00	0.0000	0.000E-00	0.0000	1.726E-12	1.0000
U-235	0.000E+00	0.0000	0.000E+00	0.0000	0.000E+00	0.0000	0.000E+00	0.0000	0.000E+00	0.0000	0.000E+00	0.0000	0.000E+00	0.0000
U-238	0.000E+00	0.0000	0.000E+00	0.0000	0.000E+00	0.0000	0.000E+00	0.0000	0.000E+00	0.0000	0.000E+00	0.0000	1.564E-17	0.0000
Total	0.000E+00	0.0000	0.000E+00	0.0000	0.000E+00	0.0000	0.000E+00	0.0000	0.000E+00	0.0000	0.000E+00	0.0000	1.726E-12	1.0000

*Sum of all water independent and dependent pathways.

Total Dose Contributions TDOSE(i,p,t) for Individual Radionuclides (i) and Pathways (p)
As mrem/yr and Fraction of Total Dose At t = 1.000E+01 years

Water Independent Pathways (Inhalation excludes radon)

Radio-	Ground		Inhalation		Radon		Plant		Meat		Milk		Soil	
Nuclide	mrem/yr	fract.	mrem/yr	fract.	mrem/yr	fract.	mrem/yr	fract.	mrem/yr	fract.	mrem/yr	fract.	mrem/yr	fract.
U-234	5.811E-30	0.0000	0.000E+00	0.0000	1.544E-11	1.0000	0.000E+00	0.0000	0.000E+00	0.0000	0.000E+00	0.0000	0.000E+00	0.0000
U-235	0.000E+00	0.0000	0.000E+00	0.0000	0.000E+00	0.0000	0.000E+00	0.0000	0.000E+00	0.0000	0.000E+00	0.0000	0.000E+00	0.0000
U-238	9.240E-29	0.0000	0.000E+00	0.0000	4.148E-16	0.0000	0.000E+00	0.0000	0.000E+00	0.0000	0.000E+00	0.0000	0.000E+00	0.0000
Total	9.821E-29	0.0000	0.000E+00	0.0000	1.544E-11	1.0000	0.000E+00	0.0000	0.000E+00	0.0000	0.000E+00	0.0000	0.000E+00	0.0000

Total Dose Contributions TDOSE(i,p,t) for Individual Radionuclides (i) and Pathways (p)
As mrem/yr and Fraction of Total Dose At t = 1.000E+01 years

Water Dependent Pathways

Radio-	Water		Fish		Radon		Plant		Meat		Milk		All Pathways*	
Nuclide	mrem/yr	fract.	mrem/yr	fract.	mrem/yr	fract.	mrem/yr	fract.	mrem/yr	fract.	mrem/yr	fract.	mrem/yr	fract.
U-234	0.000E+00	0.0000	0.000E+00	0.0000	0.000E+00	0.0000	0.000E+00	0.0000	0.000E+00	0.0000	0.000E+00	0.0000	1.544E-11	1.0000
U-235	0.000E+00	0.0000	0.000E+00	0.0000	0.000E+00	0.0000	0.000E+00	0.0000	0.000E+00	0.0000	0.000E+00	0.0000	0.000E+00	0.0000
U-238	0.000E+00	0.0000	0.000E+00	0.0000	0.000E+00	0.0000	0.000E+00	0.0000	0.000E+00	0.0000	0.000E+00	0.0000	4.148E-16	0.0000
Total	0.000E+00	0.0000	0.000E+00	0.0000	0.000E+00	0.0000	0.000E+00	0.0000	0.000E+00	0.0000	0.000E+00	0.0000	1.544E-11	1.0000

*Sum of all water independent and dependent pathways.

Total Dose Contributions TDOSE(i,p,t) for Individual Radionuclides (i) and Pathways (p)
As mrem/yr and Fraction of Total Dose At t = 3.000E+01 years

Water Independent Pathways (Inhalation excludes radon)

Radio-	Ground		Inhalation		Radon		Plant		Meat		Milk		Soil	
Nuclide	mrem/yr	fract.	mrem/yr	fract.	mrem/yr	fract.	mrem/yr	fract.	mrem/yr	fract.	mrem/yr	fract.	mrem/yr	fract.
U-234	5.015E-29	0.0000	0.000E+00	0.0000	1.302E-10	0.9999	0.000E+00	0.0000	0.000E+00	0.0000	0.000E+00	0.0000	0.000E+00	0.0000
U-235	0.000E+00	0.0000	0.000E+00	0.0000	0.000E+00	0.0000	0.000E+00	0.0000	0.000E+00	0.0000	0.000E+00	0.0000	0.000E+00	0.0000
U-238	9.527E-29	0.0000	0.000E+00	0.0000	1.015E-14	0.0001	0.000E+00	0.0000	0.000E+00	0.0000	0.000E+00	0.0000	0.000E+00	0.0000
Total	1.454E-28	0.0000	0.000E+00	0.0000	1.302E-10	1.0000	0.000E+00	0.0000	0.000E+00	0.0000	0.000E+00	0.0000	0.000E+00	0.0000

Total Dose Contributions TDOSE(i,p,t) for Individual Radionuclides (i) and Pathways (p)
As mrem/yr and Fraction of Total Dose At t = 3.000E+01 years

Water Dependent Pathways

Radio-	Water		Fish		Radon		Plant		Meat		Milk		All Pathways*	
Nuclide	mrem/yr	fract.	mrem/yr	fract.	mrem/yr	fract.	mrem/yr	fract.	mrem/yr	fract.	mrem/yr	fract.	mrem/yr	fract.
U-234	0.000E+00	0.0000	0.000E+00	0.0000	0.000E+00	0.0000	0.000E+00	0.0000	0.000E+00	0.0000	0.000E+00	0.0000	1.302E-10	0.9999
U-235	0.000E+00	0.0000	0.000E+00	0.0000	0.000E+00	0.0000	0.000E+00	0.0000	0.000E+00	0.0000	0.000E+00	0.0000	0.000E+00	0.0000
U-238	0.000E+00	0.0000	0.000E+00	0.0000	0.000E+00	0.0000	0.000E+00	0.0000	0.000E+00	0.0000	0.000E+00	0.0000	1.015E-14	0.0001
Total	0.000E+00	0.0000	0.000E+00	0.0000	0.000E+00	0.0000	0.000E+00	0.0000	0.000E+00	0.0000	0.000E+00	0.0000	1.302E-10	1.0000

*Sum of all water independent and dependent pathways.

Total Dose Contributions TDOSE(i,p,t) for Individual Radionuclides (i) and Pathways (p)
As mrem/yr and Fraction of Total Dose At t = 1.000E+02 years

Water Independent Pathways (Inhalation excludes radon)

Radio-	Ground		Inhalation		Radon		Plant		Meat		Milk		Soil	
Nuclide	mrem/yr	fract.	mrem/yr	fract.	mrem/yr	fract.	mrem/yr	fract.	mrem/yr	fract.	mrem/yr	fract.	mrem/yr	fract.
U-234	5.906E-28	0.0000	0.000E+00	0.0000	1.413E-09	0.9997	0.000E+00	0.0000	0.000E+00	0.0000	0.000E+00	0.0000	0.000E+00	0.0000
U-235	0.000E+00	0.0000	0.000E+00	0.0000	0.000E+00	0.0000	0.000E+00	0.0000	0.000E+00	0.0000	0.000E+00	0.0000	0.000E+00	0.0000
U-238	1.062E-28	0.0000	0.000E+00	0.0000	3.638E-13	0.0003	0.000E+00	0.0000	0.000E+00	0.0000	0.000E+00	0.0000	0.000E+00	0.0000
Total	6.968E-28	0.0000	0.000E+00	0.0000	1.413E-09	1.0000	0.000E+00	0.0000	0.000E+00	0.0000	0.000E+00	0.0000	0.000E+00	0.0000

Total Dose Contributions TDOSE(i,p,t) for Individual Radionuclides (i) and Pathways (p)
As mrem/yr and Fraction of Total Dose At t = 1.000E+02 years

Water Dependent Pathways

Radio-	Water		Fish		Radon		Plant		Meat		Milk		All Pathways*	
Nuclide	mrem/yr	fract.	mrem/yr	fract.	mrem/yr	fract.	mrem/yr	fract.	mrem/yr	fract.	mrem/yr	fract.	mrem/yr	fract.
U-234	0.000E+00	0.0000	0.000E+00	0.0000	0.000E+00	0.0000	0.000E+00	0.0000	0.000E+00	0.0000	0.000E+00	0.0000	1.413E-09	0.9997
U-235	0.000E+00	0.0000	0.000E+00	0.0000	0.000E+00	0.0000	0.000E+00	0.0000	0.000E+00	0.0000	0.000E+00	0.0000	0.000E+00	0.0000
U-238	0.000E+00	0.0000	0.000E+00	0.0000	0.000E+00	0.0000	0.000E+00	0.0000	0.000E+00	0.0000	0.000E+00	0.0000	3.638E-13	0.0003
Total	0.000E+00	0.0000	0.000E+00	0.0000	0.000E+00	0.0000	0.000E+00	0.0000	0.000E+00	0.0000	0.000E+00	0.0000	1.413E-09	1.0000

*Sum of all water independent and dependent pathways.

Total Dose Contributions TDOSE(i,p,t) for Individual Radionuclides (i) and Pathways (p)
As mrem/yr and Fraction of Total Dose At t = 3.000E+02 years

Water Independent Pathways (Inhalation excludes radon)

Radio-	Ground		Inhalation		Radon		Plant		Meat		Milk		Soil	
Nuclide	mrem/yr	fract.	mrem/yr	fract.	mrem/yr	fract.	mrem/yr	fract.	mrem/yr	fract.	mrem/yr	fract.	mrem/yr	fract.
U-234	6.665E-27	0.0000	0.000E+00	0.0000	1.263E-08	0.9992	0.000E+00	0.0000	0.000E+00	0.0000	0.000E+00	0.0000	0.000E+00	0.0000
U-235	5.481E-34	0.0000	0.000E+00	0.0000	0.000E+00	0.0000	0.000E+00	0.0000	0.000E+00	0.0000	0.000E+00	0.0000	0.000E+00	0.0000
U-238	1.492E-28	0.0000	0.000E+00	0.0000	9.782E-12	0.0008	0.000E+00	0.0000	0.000E+00	0.0000	0.000E+00	0.0000	0.000E+00	0.0000
Total	6.814E-27	0.0000	0.000E+00	0.0000	1.264E-08	1.0000	0.000E+00	0.0000	0.000E+00	0.0000	0.000E+00	0.0000	0.000E+00	0.0000

Total Dose Contributions TDOSE(i,p,t) for Individual Radionuclides (i) and Pathways (p)
As mrem/yr and Fraction of Total Dose At t = 3.000E+02 years

Water Dependent Pathways

Radio-	Water		Fish		Radon		Plant		Meat		Milk		All Pathways*	
Nuclide	mrem/yr	fract.	mrem/yr	fract.	mrem/yr	fract.	mrem/yr	fract.	mrem/yr	fract.	mrem/yr	fract.	mrem/yr	fract.
U-234	0.000E+00	0.0000	0.000E+00	0.0000	0.000E+00	0.0000	0.000E+00	0.0000	0.000E+00	0.0000	0.000E+00	0.0000	1.263E-08	0.9992
U-235	0.000E+00	0.0000	0.000E+00	0.0000	0.000E+00	0.0000	0.000E+00	0.0000	0.000E+00	0.0000	0.000E+00	0.0000	5.481E-34	0.0000
U-238	0.000E+00	0.0000	0.000E+00	0.0000	0.000E+00	0.0000	0.000E+00	0.0000	0.000E+00	0.0000	0.000E+00	0.0000	9.782E-12	0.0008
Total	0.000E+00	0.0000	0.000E+00	0.0000	0.000E+00	0.0000	0.000E+00	0.0000	0.000E+00	0.0000	0.000E+00	0.0000	1.264E-08	1.0000

*Sum of all water independent and dependent pathways.

Total Dose Contributions TDOSE(i,p,t) for Individual Radionuclides (i) and Pathways (p)
As mrem/yr and Fraction of Total Dose At t = 1.000E+03 years

Water Independent Pathways (Inhalation excludes radon)

Radio-	Ground		Inhalation		Radon		Plant		Meat		Milk		Soil	
Nuclide	mrem/yr	fract.	mrem/yr	fract.	mrem/yr	fract.	mrem/yr	fract.	mrem/yr	fract.	mrem/yr	fract.	mrem/yr	fract.
U-234	1.674E-25	0.0000	0.000E+00	0.0000	1.412E-07	0.9974	0.000E+00	0.0000	0.000E+00	0.0000	0.000E+00	0.0000	0.000E+00	0.0000
U-235	6.268E-33	0.0000	0.000E+00	0.0000	0.000E+00	0.0000	0.000E+00	0.0000	0.000E+00	0.0000	0.000E+00	0.0000	0.000E+00	0.0000
U-238	8.613E-28	0.0000	0.000E+00	0.0000	3.714E-10	0.0026	0.000E+00	0.0000	0.000E+00	0.0000	0.000E+00	0.0000	0.000E+00	0.0000
Total	1.683E-25	0.0000	0.000E+00	0.0000	1.415E-07	1.0000	0.000E+00	0.0000	0.000E+00	0.0000	0.000E+00	0.0000	0.000E+00	0.0000

Total Dose Contributions TDOSE(i,p,t) for Individual Radionuclides (i) and Pathways (p)
As mrem/yr and Fraction of Total Dose At t = 1.000E+03 years

Water Dependent Pathways

Radio-	Water		Fish		Radon		Plant		Meat		Milk		All Pathways*	
Nuclide	mrem/yr	fract.	mrem/yr	fract.	mrem/yr	fract.	mrem/yr	fract.	mrem/yr	fract.	mrem/yr	fract.	mrem/yr	fract.
U-234	0.000E+00	0.0000	0.000E+00	0.0000	0.000E+00	0.0000	0.000E+00	0.0000	0.000E+00	0.0000	0.000E+00	0.0000	1.412E-07	0.9974
U-235	0.000E+00	0.0000	0.000E+00	0.0000	0.000E+00	0.0000	0.000E+00	0.0000	0.000E+00	0.0000	0.000E+00	0.0000	6.288E-33	0.0000
U-238	0.000E+00	0.0000	0.000E+00	0.0000	0.000E+00	0.0000	0.000E+00	0.0000	0.000E+00	0.0000	0.000E+00	0.0000	3.714E-10	0.0026
Total	0.000E+00	0.0000	0.000E+00	0.0000	0.000E+00	0.0000	0.000E+00	0.0000	0.000E+00	0.0000	0.000E+00	0.0000	1.415E-07	1.0000

*Sum of all water independent and dependent pathways.

Dose/Source Ratios Summed Over All Pathways
Parent and Progeny Principal Radionuclide Contributions Indicated

Parent (i)	Product (j)	Thread Fraction	DSR(j,t) At Time in Years (mrem/yr)/(pCi/g) 0.000E+00	1.000E+00	3.000E+00	1.000E+01	3.000E+01	1.000E+02	3.000E+02	1.000E+03
U-234	U-234	1.000E+00	0.000E+00	0.000E+00	0.000E+00	0.000E+00	0.000E+00	0.000E+00	0.000E+00	0.000E+00
U-234	Th-230	1.000E+00	0.000E+00	0.000E+00	0.000E+00	0.000E+00	0.000E+00	0.000E+00	0.000E+00	0.000E+00
U-234	Ra-226+D	1.000E+00	1.261E-11	8.824E-11	4.664E-10	4.173E-09	3.518E-08	3.819E-07	3.414E-06	3.815E-05
U-234	Pb-210+D	1.000E+00	1.313E-41	1.959E-40	2.259E-39	5.744E-38	1.256E-36	3.310E-35	5.743E-34	2.017E-32
U-234	∑DSR(j)		1.261E-11	8.824E-11	4.664E-10	4.173E-09	3.518E-08	3.819E-07	3.414E-06	3.815E-05
U-235+D	U-235+D	1.000E+00	1.591E-39	1.595E-39	1.603E-39	1.630E-39	1.710E-39	2.024E-39	3.276E-39	1.767E-38
U-235+D	Pa-231	1.000E+00	5.881E-39	1.768E-38	4.141E-38	1.260E-37	3.810E-37	1.445E-36	6.463E-36	8.803E-35
U-235+D	Ac-227+D	1.000E+00	3.844E-35	2.670E-34	1.387E-33	1.169E-32	8.424E-32	6.057E-31	3.224E-30	3.699E-29
U-235+D	∑DSR(j)		3.845E-35	2.670E-34	1.388E-33	1.169E-32	8.424E-32	6.057E-31	3.224E-30	3.699E-29
U-238	U-238	5.400E-05	0.000E+00	0.000E+00	0.000E+00	0.000E+00	0.000E+00	0.000E+00	0.000E+00	0.000E+00
U-238+D	U-238+D	9.999E-01	9.099E-27	9.113E-27	9.141E-27	9.240E-27	9.527E-27	1.060E-26	1.440E-26	4.208E-26
U-238+D	U-234	9.999E-01	0.000E+00	0.000E+00	0.000E+00	0.000E+00	0.000E+00	0.000E+00	0.000E+00	0.000E+00
U-238+D	Th-230	9.999E-01	0.000E+00	0.000E+00	0.000E+00	0.000E+00	0.000E+00	0.000E+00	0.000E+00	0.000E+00
U-238+D	Ra-226+D	9.999E-01	8.934E-18	1.340E-16	1.564E-15	4.148E-14	1.015E-12	3.638E-11	9.782E-10	3.714E-08
U-238+D	Pb-210+D	9.999E-01	0.000E+00	0.000E+00	5.605E-45	4.358E-43	2.836E-41	2.644E-39	1.505E-37	1.903E-35
U-238+D	∑DSR(j)		8.934E-18	1.340E-16	1.564E-15	4.148E-14	1.015E-12	3.638E-11	9.782E-10	3.714E-08

The DSR includes contributions from associated (half-life ≤ 180 days) daughters.

Single Radionuclide Soil Guidelines G(i,t) in pCi/g
Basic Radiation Dose Limit = 2.500E+01 mrem/yr

Nuclide (i)	t= 0.000E+00	1.000E+00	3.000E+00	1.000E+01	3.000E+01	1.000E+02	3.000E+02	1.000E+03
U-234	*6.247E+09	*6.247E+09	*6.247E+09	5.992E+09	7.106E+08	6.546E+07	7.324E+06	6.553E+05
U-235	*2.161E+06	*2.161E+06	*2.161E+06	*2.161E+06	*2.161E+06	*2.161E+06	*2.161E+06	*2.161E+06
U-238	*3.361E+05	*3.361E+05	*3.361E+05	*3.361E+05	*3.361E+05	*3.361E+05	*3.361E+05	*3.361E+05

*At specific activity limit

Summed Dose/Source Ratios DSR(i,t) in (mrem/yr)/(pCi/g)
and Single Radionuclide Soil Guidelines G(i,t) in pCi/g
at tmin = time of minimum single radionuclide soil guideline
and at tmax = time of maximum total dose = 1.000E+03 years

Nuclide (i)	Initial (pCi/g)	tmin (years)	DSR(i,tmin)	G(i,tmin) (pCi/g)	DSR(i,tmax)	G(i,tmax) (pCi/g)
U-234	3.700E-03	1.000E+03	3.815E-05	6.553E+05	3.815E-05	6.553E+05
U-235	1.700E-04	1.000E+03	3.699E-29	*2.161E+06	3.699E-29	*2.161E+06
U-238	1.000E-02	1.000E+03	3.714E-08	*3.361E+05	3.714E-08	*3.361E+05

*At specific activity limit

Individual Nuclide Dose Summed Over All Pathways
Parent Nuclide and Branch Fraction Indicated

Nuclide (j)	Parent (i)	THF(i)	DOSE(j,t), mrem/yr t= 0.000E+00	1.000E+00	3.000E+00	1.000E+01	3.000E+01	1.000E+02	3.000E+02	1.000E+03
U-234	U-234	1.000E+00	0.000E+00	0.000E+00	0.000E+00	0.000E+00	0.000E+00	0.000E+00	0.000E+00	0.000E+00
U-234	U-238	9.999E-01	0.000E+00	0.000E+00	0.000E+00	0.000E+00	0.000E+00	0.000E+00	0.000E+00	0.000E+00
U-234	∑DOSE(j)		0.000E+00	0.000E+00	0.000E+00	0.000E+00	0.000E+00	0.000E+00	0.000E+00	0.000E+00
Th-230	U-234	1.000E+00	0.000E+00	0.000E+00	0.000E+00	0.000E+00	0.000E+00	0.000E+00	0.000E+00	0.000E+00
Th-230	U-238	9.999E-01	0.000E+00	0.000E+00	0.000E+00	0.000E+00	0.000E+00	0.000E+00	0.000E+00	0.000E+00
Th-230	∑DOSE(j)		0.000E+00	0.000E+00	0.000E+00	0.000E+00	0.000E+00	0.000E+00	0.000E+00	0.000E+00
Ra-226	U-234	1.000E+00	4.664E-14	3.265E-13	1.726E-12	1.544E-11	1.302E-10	1.413E-09	1.263E-08	1.412E-07
Ra-226	U-238	9.999E-01	8.934E-20	1.340E-18	1.564E-17	4.148E-16	1.015E-14	3.638E-13	9.782E-12	3.714E-10
Ra-226	∑DOSE(j)		4.664E-14	3.265E-13	1.726E-12	1.544E-11	1.302E-10	1.413E-09	1.264E-08	1.415E-07
Pb-210	U-234	1.000E+00	0.000E+00	0.000E+00	0.000E+00	0.000E+00	0.000E+00	0.000E+00	0.000E+00	0.000E+00
Pb-210	U-238	9.999E-01	0.000E+00	0.000E+00	0.000E+00	0.000E+00	0.000E+00	0.000E+00	0.000E+00	0.000E+00
Pb-210	∑DOSE(j)		0.000E+00	0.000E+00	0.000E+00	0.000E+00	0.000E+00	0.000E+00	0.000E+00	0.000E+00
U-235	U-235	1.000E+00	0.000E+00	0.000E+00	0.000E+00	0.000E+00	0.000E+00	0.000E+00	0.000E+00	0.000E+00
Pa-231	U-235	1.000E+00	0.000E+00	0.000E+00	0.000E+00	0.000E+00	0.000E+00	0.000E+00	0.000E+00	0.000E+00
Ac-227	U-235	1.000E+00	0.000E+00	0.000E-00	0.000E+00	0.000E+00	0.000E+00	0.000E+00	5.481E-34	6.288E-33
U-238	U-238	5.400E-05	0.000E+00	0.000E+00	0.000E+00	0.000E+00	0.000E+00	0.000E+00	0.000E+00	0.000E+00
U-238	U-238	9.999E-01	9.099E-29	9.113E-29	9.141E-29	9.240E-29	9.527E-29	1.060E-28	1.440E-28	4.208E-28
U-238	∑DOSE(j)		9.099E-29	9.113E-29	9.141E-29	9.240E-29	9.527E-29	1.060E-28	1.440E-28	4.208E-28

THF(i) is the thread fraction of the parent nuclide.

Individual Nuclide Soil Concentration
Parent Nuclide and Branch Fraction Indicated

Nuclide (j)	Parent (i)	THF(i)	S(j,t), pCi/g t= 0.000E+00	1.000E+00	3.000E+00	1.000E+01	3.000E+01	1.000E+02	3.000E+02	1.000E+03
U-234	U-234	1.000E+00	3.700E-03	3.700E-03	3.699E-03	3.698E-03	3.694E-03	3.681E-03	3.643E-03	3.513E-03
U-234	U-238	9.999E-01	0.000E+00	2.835E-08	8.503E-08	2.833E-07	8.492E-07	2.821E-06	8.377E-06	2.695E-05
U-234	∑S(j):		3.700E-03	3.700E-03	3.700E-03	3.698E-03	3.695E-03	3.684E-03	3.651E-03	3.540E-03
Th-230	U-234	1.000E+00	0.000E+00	3.331E-08	9.991E-08	3.330E-07	9.983E-07	3.321E-06	9.901E-06	3.231E-05
Th-230	U-238	9.999E-01	0.000E+00	1.276E-13	1.148E-12	1.275E-11	1.147E-10	1.271E-09	1.136E-08	1.230E-07
Th-230	∑S(j):		0.000E+00	3.331E-08	9.991E-08	3.330E-07	9.984E-07	3.322E-06	9.913E-06	3.243E-05
Ra-226	U-234	1.000E+00	0.000E+00	7.213E-12	6.490E-11	7.202E-10	6.460E-09	7.091E-08	6.168E-07	6.100E-06
Ra-226	U-238	9.999E-01	0.000E+00	1.842E-17	4.973E-16	1.840E-14	4.954E-13	1.817E-11	4.769E-10	1.604E-08
Ra-226	∑S(j):		0.000E+00	7.213E-12	6.490E-11	7.202E-10	6.460E-09	7.093E-08	6.173E-07	6.116E-06
Pb-210	U-234	1.000E+00	0.000E+00	7.416E-14	1.971E-12	6.919E-11	1.617E-09	3.941E-08	5.006E-07	5.745E-06
Pb-210	U-238	9.999E-01	0.000E+00	1.423E-19	1.138E-17	1.346E-15	9.696E-14	8.461E-12	3.539E-10	1.464E-08
Pb-210	∑S(j):		0.000E+00	7.416E-14	1.971E-12	6.919E-11	1.617E-09	3.942E-08	5.010E-07	5.760E-06
U-235	U-235	1.000E+00	1.700E-04	1.700E-04	1.700E-04	1.699E-04	1.698E-04	1.692E-04	1.675E-04	1.619E-04
Pa-231	U-235	1.000E+00	0.000E+00	3.597E-09	1.079E-08	3.595E-08	1.077E-07	3.578E-07	1.062E-06	3.414E-06
Ac-227	U-235	1.000E+00	0.000E+00	5.665E-11	4.992E-10	5.160E-09	3.833E-08	2.499E-07	9.502E-07	3.303E-06
U-238	U-238	5.400E-05	5.400E-07	5.400E-07	5.399E-07	5.397E-07	5.392E-07	5.374E-07	5.321E-07	5.142E-07
U-238	U-238	9.999E-01	9.999E-03	9.999E-03	9.998E-03	9.995E-03	9.985E-03	9.951E-03	9.854E-03	9.522E-03
U-238	∑S(j):		1.000E-02	1.000E-02	9.999E-03	9.995E-03	9.985E-03	9.951E-03	9.854E-03	9.522E-03

THF(i) is the thread fraction of the parent nuclide.

RESCALC.EXE execution time = 10.81 seconds