GE Hitachi Nuclear Energy

26A6642AK
Revision 7
March 2010

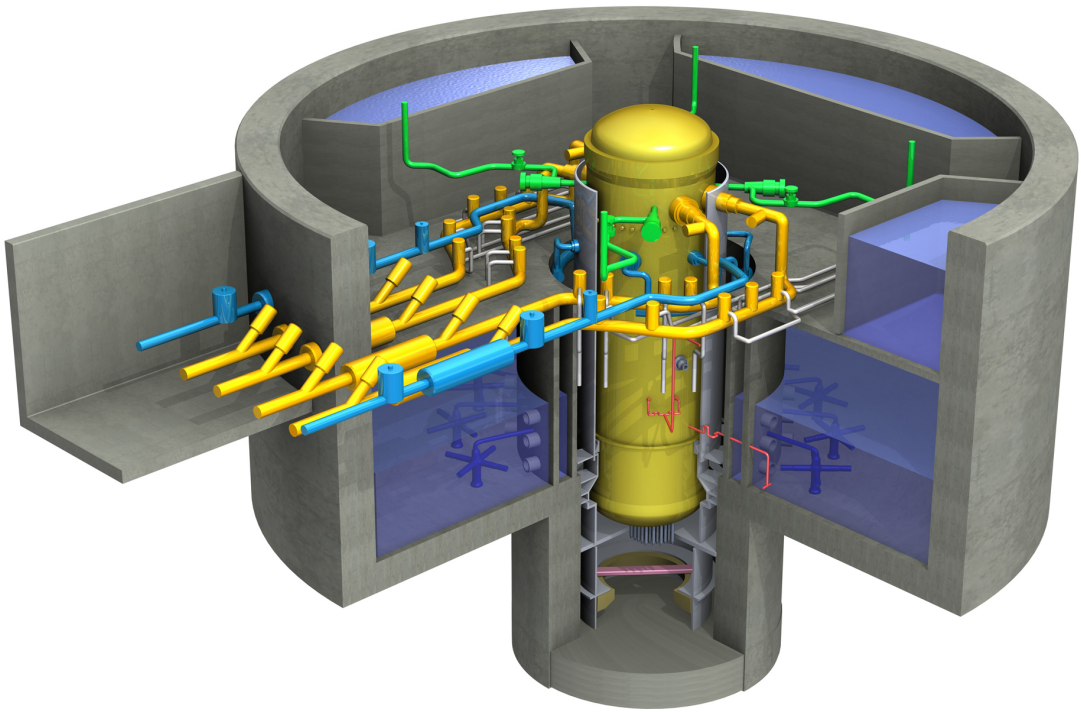

ESBWR Design Control Document
Tier 2

Chapter 3
Design of Structures, Components, Equipment, and Systems
Sections 3.9 – 3.11

Contents

3.9 Mechanical Systems and Components 3.9-1
3.9.1 Special Topics for Mechanical Components 3.9-1
3.9.1.1 Design Transients 3.9-1
3.9.1.2 Computer Programs Used in Analyses 3.9-2
3.9.1.3 Experimental Stress Analysis 3.9-2
3.9.1.4 Considerations for the Evaluation of Faulted Condition 3.9-2
3.9.2 Dynamic Testing and Analysis of Systems, Components and Equipment 3.9-5
3.9.2.1 Piping Vibration, Thermal Expansion and Dynamic Effects 3.9-5
3.9.2.1.1 Vibration and Dynamic Effects Testing 3.9-6
3.9.2.1.2 Thermal Expansion Testing 3.9-8
3.9.2.2 Seismic Qualification of Safety-Related Mechanical Equipment (Including Other RBV Induced Loads) 3.9-10
3.9.2.2.1 Tests and Analysis Criteria and Methods 3.9-10
3.9.2.2.2 Qualification of Safety-Related Mechanical Equipment 3.9-12
3.9.2.3 Dynamic Response of Reactor Internals Under Operational Flow Transients and Steady-State Conditions 3.9-15
3.9.2.4 Initial Startup Flow Induced Vibration Testing of Reactor Internals 3.9-17
3.9.2.5 Dynamic System Analysis of Reactor Internals Under Faulted Conditions 3.9-19
3.9.2.6 Correlations of Reactor Internals Vibration Tests with the Analytical Results 3.9-20
3.9.3 ASME B&PV Code Class 1, 2 and 3 Components, Component Supports and Core Support Structures 3.9-20
3.9.3.1 Loading Combinations, Design Transients and Stress Limits 3.9-21
3.9.3.1.1 Plant Conditions 3.9-22
3.9.3.1.2 Inspections/Testing Following the Reactor Coolant System Exceeding Service Level B Pressure Limit 3.9-24
3.9.3.2 Reactor Pressure Vessel Assembly 3.9-24
3.9.3.3 Main Steam System Piping 3.9-25
3.9.3.4 Other Components 3.9-25
3.9.3.5 Valve Operability Assurance 3.9-26
3.9.3.5.1 Major Active Valves 3.9-28
3.9.3.5.2 Other Active Valves 3.9-29
3.9.3.6 Design and Installation of Pressure Relief Devices 3.9-32
3.9.3.7 Component Supports 3.9-33
3.9.3.7.1 Piping Supports 3.9-34
3.9.3.7.2 Reactor Pressure Vessel Sliding Supports 3.9-41
3.9.3.7.3 Reactor Pressure Vessel Stabilizer 3.9-41
3.9.3.7.4 Floor-Mounted Major Equipment 3.9-41
3.9.3.8 Other ASME B&PV Code Component Supports 3.9-41
3.9.3.9 Threaded Fasteners – ASME B&PV Code Class 1, 2 and 3 ..... 3.9-42
3.9.3.9.1 Material Selection 3.9-42
3.9.3.9.2 Special Materials Fabrication Processes and Special Controls 3.9-42
3.9.3.9.3 Preservice and Inservice Inspection Requirements 3.9-42
3.9.4 Control Rod Drive System 3.9-43

3.9.4.1 Descriptive Information on Control Rod Drive System 3.9-44
3.9.4.2 Applicable Control Rod Drive System Design Specification 3.9-44
3.9.4.3 Design Loads and Stress Limits 3.9-44
3.9.4.4 Control Rod Drive Performance Assurance Program 3.9-44
3.9.5 Reactor Pressure Vessel Internals 3.9-45
3.9.5.1 Core Support Structures 3.9-46
3.9.5.2 Internal Structures 3.9-47
3.9.5.3 Loading Conditions 3.9-50
3.9.5.4 Design Bases 3.9-50
3.9.6 Inservice Testing of Pumps and Valves 3.9-52
3.9.6.1 InService Testing Valves 3.9-53
3.9.6.1.1 Valve Exemptions 3.9-54
3.9.6.1.2 Valve Categories 3.9-54
3.9.6.1.3 Valve Functions 3.9-54
3.9.6.1.4 Valve Testing 3.9-55
3.9.6.1.5 Specific Valve Test Requirements 3.9-56
3.9.6.2 Inservice Testing of Pumps 3.9-58
3.9.6.3 Preservice Testing of Valves 3.9-58
3.9.6.4 Deferred Testing Justifications 3.9-58
3.9.6.5 Valve Replacement, Repair and Maintenance 3.9-58
3.9.6.6 10 CFR 50.55a Relief Requests and Code Cases 3.9-58
3.9.6.7 Inservice Testing Program Implementation 3.9-59
3.9.6.8 Non-Code Testing of Power-Operated Valves 3.9-59
3.9.7 Risk-Informed Inservice Testing 3.9-59
3.9.8 Risk-Informed Inservice Inspection of Piping 3.9-59
3.9.9 COL Information 3.9-59
3.9.10 References 3.9-60
3.10 Seismic and Dynamic Qualification of Mechanical and Electrical Equipment 3.10-1
3.10.1 Seismic and Dynamic Qualification Criteria 3.10-3
3.10.1.1 Selection of Qualification Method 3.10-3
3.10.1.2 Input Motion 3.10-3
3.10.1.3 Dynamic Qualification Program 3.10-3
3.10.1.4 Dynamic Qualification Report 3.10-3
3.10.2 Methods and Procedures for Qualifying Mechanical and Electrical Equipment 3.10-4
3.10.2.1 Qualification by Testing 3.10-4
3.10.2.2 Qualification by Analysis 3.10-7
3.10.2.3 Qualification by Combined Testing and Analysis 3.10-7
3.10.2.4 (Deleted) 3.10-9
3.10.3 Analysis or Testing of Electrical Equipment Supports 3.10-9
3.10.3.1 Nuclear Steam Supply System Electrical Equipment Supports (Other than Motors and Valve-Mounted Equipment) 3.10-9
3.10.3.2 Other Electrical Equipment Supports 3.10-10
3.10.3.3 Documentation of Testing or Analysis of Electrical Supports 3.10-11
3.10.4 COL Information 3.10-12

3.10.5 References 3.10-12
3.11 Environmental Qualification of Mechanical and Electrical Equipment 3.11-1
3.11.1 Description Requirements 3.11-1
3.11.1.1 Applicable Regulations and Standards 3.11-2
3.11.1.2 General Requirements 3.11-4
3.11.1.3 Definitions 3.11-5
3.11.2 Equipment Identification 3.11-6
3.11.3 Environmental Conditions 3.11-6
3.11.3.1 General Requirements 3.11-6
3.11.3.2 Environmental Requirements 3.11-11
3.11.4 Qualification Program, Methods and Documentation 3.11-11
3.11.4.1 Harsh Environment Qualification 3.11-11
3.11.4.2 Mild Environment Qualification 3.11-13
3.11.4.3 Computer-based Instrumentation and Control Systems 3.11-13
3.11.4.4 Environmental Qualification Documentation 3.11-15
3.11.5 Loss of Heating, Ventilating and Air Conditioning 3.11-15
3.11.6 Estimated Chemical and Radiation Environment 3.11-15
3.11.7 COL Information 3.11-15
3.11.8 References 3.11-16

List of Tables

Table 3.9-1 Plant Events 3.9-61
[*Table 3.9-2 Load Combinations and Acceptance Criteria for Safety-Related, ASME B&PV Code Class 1, 2 and 3 Components, Component Supports, and Class CS Structures* 3.9-63
Table 3.9-3 Pressure Differentials Across Reactor Vessel Internals 3.9-67
Table 3.9-4 Deformation Limit for Safety Class Reactor Internal Structures Only 3.9-68
Table 3.9-5 Primary Stress Limit for Safety Class Reactor Internal Structures Only 3.9-69
Table 3.9-6 Buckling Stability Limit for Safety Class Reactor Internal Structures Only 3.9-71
Table 3.9-7 Fatigue Limit for Safety Class Reactor Internal Structures Only 3.9-72
Table 3.9-8 Inservice Testing 3.9-73
[*Table 3.9-9 Load Combinations and Acceptance Criteria for Class 1 Piping Systems* 3.9-111
[*Table 3.9-10 Snubber Loads* 3.9-112
[*Table 3.9-11 Strut Loads* 3.9-113
[*Table 3.9-12 Linear Type (Anchor and Guide) Main Steam Piping Support* 3.9-114
Table 3.11-1 Electrical and Mechanical Equipment for Environmental Qualification 3.11-17

List of Illustrations

Figure 3.9-1. Stress-Strain Curve for Blowout Restraints 3.9-115
Figure 3.9-2. Minimum Floodable Volume 3.9-116
Figure 3.9-3. Recirculation Flow Path 3.9-117
Figure 3.9-4. Fuel Support Pieces 3.9-118
Figure 3.9-5. Pressure Nodes for Depressurization Analysis 3.9-119
Figure 3.9-6. Flow Chart for Determining Test Data Frequency and Amplitude 3.9-120
Figure 3.9-7. ESBWR Reactor Assembly Showing Reactor Internal Components 3.9-121
Figure 3.9-8. Typical Shroud, Chimney, and Top Guide Assembly 3.9-122
Figure 3.9-9. Typical Core Plate to Shroud Connection 3.9-123
Figure 3.9-10. Typical In-core Guide Tube Lateral Support Connection to Support Ring . 3.9-124
Figure 3.9-11. Typical Inter-Connection Between In-core Guide Tube Lateral Supports .. 3.9-125
Figure 3.9-12. Typical Connection Between In-Core Guide Tube and Core Plate 3.9-126

3.9 MECHANICAL SYSTEMS AND COMPONENTS

3.9.1 Special Topics for Mechanical Components

This subsection addresses information concerning methods of analysis for seismic Category I components and supports, including both those designated as ASME Boiler and Pressure Vessel (B&PV) Code, Section III, Division 1 Class 1, 2, 3, or CS and those not covered by the ASME B&PV Code as discussed in Standard Review Plan (SRP) 3.9.1. Information is also presented concerning design transients for ASME B&PV Code Class 1 and CS components and supports.

The plant design meets the relevant requirements of the following regulations:

(1) General Design Criterion (GDC) 1 as it relates to safety-related components being designed, fabricated, erected, constructed, tested and inspected in accordance with the requirements of applicable codes and standards commensurate with the importance of the safety-related function to be performed.

(2) GDC 2 as it relates to safety-related mechanical components of systems being designed to withstand seismic events without loss of capability to perform their safety-related function.

(3) GDC 14 as it relates to the reactor coolant pressure boundary (RCPB) being designed so as to have an extremely low probability of abnormal leakage, of rapidly propagating failure, and of gross rupture.

(4) GDC 15 as it relates to the mechanical components of the reactor coolant system being designed with sufficient margin to ensure that the design conditions of the RCPB are not exceeded during any condition of normal operation, including anticipated operational occurrences (AOOs).

(5) Title 10, Code of Federal Regulations (10 CFR), Part 50, Appendix B as it relates to design quality control.

(6) 10 CFR 50, Appendix S as it relates to the suitability of the plant design bases for mechanical components established in consideration of site seismic characteristics.

3.9.1.1 Design Transients

The plant events affecting the mechanical systems, components and equipment are summarized in Table 3.9-1 in two groups: (1) plant operating events during which thermal-hydraulic transients occur, and (2) dynamic loading events caused by accidents, earthquakes and certain operating conditions. The number of cycles associated with each event for the design of the Reactor Pressure Vessel (RPV), as an example, is listed in Table 3.9-1. The plant operating conditions are identified as normal, upset, emergency, faulted, or testing as defined in Subsection 3.9.3. Appropriate Service Levels (A, B, C, D or testing) as defined in the ASME B&PV Code, are designated for design limits. The design and analyses of safety-related piping and equipment using specific applicable thermal-hydraulic transients, which are derived from the system behavior during the events listed in Table 3.9-1, are documented in the design specifications and/or stress reports of the respective equipment. Table 3.9-2 shows the load combinations and the standard acceptance criteria. Table 3.9-9 shows the specific load combinations and acceptance criteria for Class 1 piping systems.

3.9.1.2 Computer Programs Used in Analyses

The computer programs used in the analysis of the major safety-related components are described in Appendix 3D.

The computer programs used in the analyses of Seismic Category I components are maintained either by General Electric Company (GE) or by outside computer program developers. In either case, the quality of the programs and the computed results are controlled. The programs are verified for their application by appropriate methods, such as hand calculations, or comparison with results from similar programs, experimental tests or published literature including analytical results or numerical results to the benchmark problems.

3.9.1.3 Experimental Stress Analysis

The following subsections list those Nuclear Steam Supply System components for which experimental stress analysis is performed in conjunction with analytical evaluation. The experimental stress analysis methods are used in compliance with the provisions of Appendix II of the ASME B&PV Code.

Piping Snubbers and Restraints

The following components have been tested to verify their design adequacy:

(1) piping seismic snubbers, and

(2) pipe whip restraints.

Descriptions of the snubber and whip restraint tests are contained in Subsection 3.9.3 and Section 3.6, respectively.

3.9.1.4 Considerations for the Evaluation of Faulted Condition

All Seismic Category I equipment is evaluated for the faulted (Service Level D) loading conditions identified in Tables 3.9-1 and 3.9-2. In all cases, the calculated actual stresses are within the allowable Service Level D limits. The following subsections address the evaluation methods and stress limits used for the equipment and identify the major components evaluated for faulted conditions. Additional discussion of faulted analysis can be found in Subsections 3.9.2, 3.9.3 and 3.9.5.

Deformations under faulted conditions are evaluated in critical areas and the necessary design deformation limits, such as clearance limits, are satisfied.

Fine Motion Control Rod Drive

The Fine Motion Control Rod Drive (FMCRD) major components that are part of the RCPB are analyzed and evaluated for the faulted conditions in accordance with the ASME B&PV Code, Appendix F.

Hydraulic Control Unit

The Hydraulic Control Unit (HCU) is analyzed and tested for withstanding the faulted condition loads. Dynamic tests that are part of the seismic and dynamic qualification program establish the loads in the horizontal and vertical directions as the HCU capability for the frequency range that is likely to be experienced in the plant. These tests also ensure that the scram function of the

HCU can be performed under these loads. Dynamic analysis of the HCU with the mounting beams is performed to assure that the maximum faulted condition loads remain below the HCU capability.

Reactor Pressure Vessel Assembly

The RPV assembly includes: (1) the RPV boundary out to and including the nozzles and housings for FMCRD and in-core instrumentation; (2) vessel sliding support and (3) the shroud support. The design and analysis of these three parts complies with Subsections NB, NF and NG, respectively, of the ASME B&PV Code. For faulted conditions, the reactor vessel is evaluated using elastic analysis. For the sliding supports and shroud support, an elastic analysis is performed, and buckling is evaluated for compressive load cases for certain locations in the assembly.

Core Support Structures and Other Safety-Related Reactor Internal Components

The core support structures and other safety-related reactor internal components are evaluated for faulted conditions. The basis for determining the faulted loads for seismic events and other dynamic events is given in Section 3.7 and Subsection 3.9.5, respectively. The allowable Service Level D limits for evaluation of these structures are provided in Subsection 3.9.5.

RPV Stabilizer and FMCRD and In-Core Housing Restraints (Supports)

The calculated maximum stresses meet the allowable stress limits based on the ASME B&PV Code, Subsection NF, for the RPV stabilizer and supports for the FMCRD housing and in-core housing for faulted conditions. These supports restrain the components during earthquake, pipe rupture or other Reactor Building Vibration (RBV) events.

There are eight RPV Stabilizers attached to the Reactor Shield Wall (RSW) that are equally spaced around the circumference of the RPV. The stabilizers interact with eight stabilizer brackets welded to the outside of the RPV wall to resist horizontal loads and limit RPV motion during an earthquake or a postulated pipe break. The lugs are free to move in the vertical and radial directions to accommodate RPV thermal growth and dilation due to pressure. The horizontal loads are resisted by a series of Belleville washers (i.e., spring washers) on either side of the vessel brackets and transferred to the RSW.

Main Steam Isolation Valve, Safety Relief Valve and Other ASME Class 1 Valves

Elastic analysis methods and standard design rules, as defined in the ASME B&PV Code, are utilized in the analysis of the pressure boundary, Seismic Category I, ASME Class 1 valves. The ASME B&PV Code-allowable stresses are applied to assure integrity under applicable loading conditions including faulted condition. Subsection 3.9.3 discusses the operability qualification of the major active valves including main steam isolation valve (MSIV) and the main steam (MS) safety relief valve (SRV) for seismic and other dynamic conditions.

Fuel Storage and Refueling Equipment

Refueling and servicing equipment and other equipment, which in the case of a failure would degrade a safety-related component, are defined in Section 9.1, and are classified per Table 3.2-1. These components are subjected to an elastic dynamic finite-element analysis to generate loadings. This analysis utilizes appropriate floor response spectra and combines loads at frequencies up to Zero Period Acceleration (ZPA) defined in Subsection 3.7.2.7 in three

directions. Imposed stresses are generated and combined for normal, upset, and faulted conditions. Stresses are compared, depending on the specific equipment, to Industrial Codes (ASME, ANSI), or Industrial Standards (AISC) allowables.

Fuel Assembly (Including Channel)

GE ESBWR fuel assembly (including channel) design bases, and analytical and evaluation methods including those applicable to the faulted conditions are similar to those contained in References 3.9-1 and 3.9-2.

ASME Class 2 and 3 Vessels

Elastic analysis methods are used for evaluating faulted loading conditions for Class 2 and 3 vessels. The equivalent allowable stresses using elastic techniques are obtained from NC/ND-3300 and NC-3200 of the ASME B&PV Code. These allowables are above elastic limits.

ASME Class 2 and 3 Pumps

Elastic analysis methods are used for evaluating faulted loading conditions for Class 2 and 3 pumps. The equivalent allowable stresses for nonactive pumps using elastic techniques are obtained from NC/ND-3400 the ASME B&PV Code. These allowables are above elastic limits.

ASME Class 2 and 3 Valves

Elastic analysis methods and standard design rules are used for evaluating faulted loading conditions for Class 2 and 3 valves. The equivalent allowable stresses for nonactive valves using elastic techniques are obtained from NC/ND-3500 of the ASME B&PV Code. These allowables are above elastic limits.

ASME Class 1, 2 and 3 Piping

Elastic analysis methods are used for evaluating faulted loading conditions for Class 1, 2, and 3 piping. The equivalent allowable stresses using elastic techniques are obtained from Appendix F (for Class 1) and NC/ND-3600 (for Class 2 and 3 piping) of the ASME B&PV Code. These allowables are above elastic limits. The allowables for functional capability of the safety-related piping are provided in a footnote to Table 3.9-2.

Inelastic Analysis Methods

Inelastic analysis is only applied to ESBWR components to demonstrate the acceptability of two types of postulated events. Each event is an extremely low-probability occurrence and the equipment affected by these events would not be reused. These two events are as follows:

- postulated gross piping failure; and
- postulated blowout of a Control Rod Drive housing (CRDH) caused by a weld failure.

The loading combinations and design criteria for pipe whip restraints utilized to mitigate the effects of postulated piping failures are provided in Subsection 3.6.2. Except for pipe whip restraints, inelastic analysis methods are not used in the ESBWR piping design and analysis.

The mitigation of the CRDH attachment weld failure relies on components with regular functions to mitigate the weld failure effect. The components are specifically:

- core support plate;
- control rod guide tube (CRGT);
- CRDH;
- control rod drive (CRD) outer tube; and
- bayonet fingers.

Only the bodies of the CRGT, CRDH and CRD outer tube are analyzed for energy absorption by inelastic deformation.

Inelastic analyses for the CRDH attachment weld failure, together with the criteria used for evaluation, are consistent with the procedures described in Subsection 3.6.2 for the different components of a pipe whip restraint. Figure 3.9-1 shows the stress-strain curve used for the inelastic analysis.

3.9.2 Dynamic Testing and Analysis of Systems, Components and Equipment

This subsection presents the criteria, testing procedures, and dynamic analyses employed to ensure the structural and functional integrity of piping systems, mechanical equipment, reactor internals, and their supports (including supports for conduit and cable trays, and ventilation ducts) under vibratory loadings, including those due to fluid flow and postulated seismic events discussed in SRP 3.9.2. Structural requirements for conduits and cable tray supports and Heating, Ventilation and Air Conditioning duct supports are specified in Subsections 3.8.4.1.6 and 3.8.4.1.7 respectively.

The plant meets the following requirements:

(1) GDC 1 as it relates to the testing and analysis of systems, components, and equipment with appropriate safety-related functions being performed to appropriate quality standards.

(2) GDC 2 as it relates to safety-related systems, components and equipment being designed to withstand appropriate combinations of the effects of normal and accident conditions with the effects of natural phenomena (safe shutdown earthquake[SSE]).

(3) GDC 4 as it relates to safety-related systems and components being appropriately protected against the dynamic effects of discharging fluids.

(4) GDC 14 as it relates to systems and components of the RCPB being designed to have an extremely low probability of rapidly propagating failure or of gross rupture.

(5) GDC 15 as it relates to the reactor coolant system being designed with sufficient margin to ensure that the RCPB is not breached during normal operating conditions, including AOOs.

3.9.2.1 Piping Vibration, Thermal Expansion and Dynamic Effects

The overall test program is divided into two phases: the preoperational test phase and the initial startup test phase. Piping vibration, thermal expansion and dynamic effects testing is performed during both of these phases as described in Chapter 14. Discussed below are the general requirements for this testing. It should be noted that because one goal of the dynamic effects testing is to verify the adequacy of the piping support system, such components are addressed in

the subsections that follow. However, the more specific requirements for the design and testing of the piping support system are described in Subsection 3.9.3.7.

3.9.2.1.1 Vibration and Dynamic Effects Testing

The purpose of these tests is to confirm that the piping, components, restraints and supports of specified high- and moderate-energy systems have been designed to withstand the dynamic effects of steady state flow-induced vibration (FIV) and anticipated operational transient conditions. The general requirements for vibration and dynamic effects testing of piping systems are specified in Regulatory Guide (RG) 1.68, "Initial Test Programs for Water-Cooled Nuclear Power Plants." More specific vibration testing requirements are defined in Part 3 of Reference 3.9-8, "Requirements for Preoperational and Initial Startup Vibration Testing of Nuclear Power Plant Piping Systems." Detailed test specifications are in accordance with this standard and address such issues as prerequisites, test conditions, precautions, measurement techniques, monitoring requirements, test hold points and acceptance criteria. The development and specification of the types of measurements required, the systems and locations to be monitored, the test acceptance criteria, and the corrective actions that may be necessary are discussed in more detail below.

Measurement Techniques

There are essentially three methods available for determining the acceptability of steady state and transient vibration for the affected systems. These are visual observation, local measurements, and remotely monitored/recorded measurements. The technique used depends on such factors as the safety significance of the particular system, the expected mode and/or magnitude of the vibration, the accessibility of the system during designated testing conditions, or the need for a time-history recording of the vibratory behavior. Typically, the systems where vibration has the greatest safety implication are subject to more rigorous testing and precise instrumentation requirements and, therefore, require remote monitoring techniques. Local measurement techniques, such as the use of a hand-held vibrometer, are more appropriate in cases where it is expected that the vibration is less complex and of lower magnitude. Many systems that are accessible during the preoperational test phase and that do not show significant intersystem interactions fall into this category. Visual observations are used where vibration is expected to be minimal and the need for a time history record of transient behavior is not anticipated. However, unexpected visual observations or local indications may require that a more sophisticated technique be used. Also, the issue of accessibility is considered. Application of these measurement techniques is detailed in each testing specification consistent with the guidelines contained in Part 3 of Reference 3.9-8.

Monitoring Requirements

As described in Chapter 14, safety-related system critical components and piping runs are subjected to steady state and transient vibration measurements. The scope of such testing includes safety-related instrumentation piping and attached small-bore piping (branch piping). Monitoring location selection considerations include the proximity of isolation valves, pressure or flow control valves, flow orifices, distribution headers, pumps and other elements where shock or high turbulence may be of concern. Location and orientation of instrumentation and/or measurements are detailed in each test specification. Monitored data includes actual deflections and frequencies as well as related system operating conditions. Time duration of data recording

should be sufficient to indicate whether the vibration is continuous or transient. Steady state monitoring is performed at critical conditions such as minimum or maximum flow, or abnormal combinations or configurations of system pumps or valves. Transient monitoring includes anticipated system and total plant operational transients where critical piping or components are expected to show significant response. Steady state conditions and transient events to be monitored are detailed in the appropriate testing specification consistent with Reference 3.9-8 Part 3 guidelines.

Test Evaluation and Acceptance Criteria

The piping response to test conditions is considered acceptable if the review of the test results indicates that the piping responds in a manner consistent with predictions of the stress report and/or that piping stresses are within the ASME B&PV Code (NB, NC, ND-3600) limits. Acceptable limits are determined after the completion of piping systems stress analysis and are provided in the piping test specifications.

To ensure test data integrity and testing personnel protection, criteria have been established to facilitate assessment of the test while it is in progress. For steady state and transient vibration the pertinent acceptance criteria are usually expressed in terms of maximum allowable displacement/deflection. Visual observation is only used to confirm the absence of significant levels of vibration and not to determine acceptability of any potentially excessive vibration. Therefore, in some cases other measurement techniques are required with appropriate quantitative acceptance criteria.

There are two stress levels of acceptance criteria for allowable vibration displacements/deflections. Level 1 criteria are bounding type criteria associated with safety limits, while Level 2 criteria are stricter criteria associated with system or component expectations. For steady state vibration, the Level 1 criteria are based on Reference 3.9-8, Part 3, paragraph 3.2.1.2. For stainless steel, the Level 1 criterion is 75 MPa (10,880 psi). For carbon steel and low alloy steel, the Level 1 criterion is 53 MPa (7692 psi). The corresponding Level 2 criteria are based on one half of the Level 1 limits. For transient vibration, the Level 1 criteria are based on either the ASME B&PV Code upset primary stress limit or the applicable snubber load capacity. Level 2 criteria are based on a given tolerance about the expected deflection value.

Reconciliation and Corrective Actions

During the course of the tests, the remote measurements are regularly checked to verify compliance with acceptance criteria. If trends indicate that criteria may be violated, the measurements are monitored at more frequent intervals. The test is held for Level 2 criteria violations and terminated as soon as Level 1 criteria are violated. As soon as possible after the test hold or termination, appropriate investigative and corrective actions are taken. If practicable, a walkdown of the piping and suspension system is made in an attempt to identify potential obstructions, improperly operating suspension components, or sensor malfunction. Hangers and snubbers should be positioned such that they can accommodate the expected deflections without bottoming out or extending fully. All signs of damage to piping supports or anchors are investigated.

Instrumentation indicating criteria failure is checked for proper operation and calibration, including comparison with other instrumentation located in the proximity of the excessive

vibration. The assumptions used in the calculations that generated the applicable limits are verified against actual conditions and discrepancies noted are accounted for in the criteria limits. This may require a reanalysis at actual system conditions.

Should the investigation of instrumentation and calculations fail to reconcile the criteria violations, physical corrective actions may be required. This might include identification and reduction or elimination of offending forcing functions, detuning of resonant piping spans by modifications, addition of bracing, or changes in operating procedures to avoid troublesome conditions. Any such modifications require retest to verify that vibrations have been sufficiently reduced.

3.9.2.1.2 Thermal Expansion Testing

A thermal expansion preoperational and startup testing program verifies that normal unrestrained thermal movement occurs in specified safety-related high- and moderate-energy piping systems. The testing is performed through the use of visual observation and remote sensors. The purpose of this program is to ensure the following:

- The piping system during system heatup and cooldown is free to expand and move without unplanned obstruction or restraint in the x, y, and z directions.
- The piping system does shake down after a few thermal expansion cycles.
- The piping system is working in a manner consistent with the predictions of the stress analysis.
- There is adequate agreement between calculated values and measured values of displacements.
- There is consistency and repeatability in thermal displacements during heatup and cooldown of the systems.

The general requirements for thermal expansion testing of piping systems are specified in RG 1.68, " Initial Test Programs for Water-Cooled Nuclear Power Plants." More specific requirements are defined in Reference 3.9-8, Part 7 "Requirements for Thermal Expansion Testing of Nuclear Power Plant Piping Systems." Detailed test specifications are prepared in full accordance with this standard and address such issues as prerequisites, test conditions, precautions, measurement techniques, monitoring requirements, test hold points and acceptance criteria. The development and specification of the types of measurements required, the systems and locations to be monitored, the test acceptance criteria, and the corrective actions that may be necessary are discussed in more detail below.

In addition to thermal expansion testing, thermal stratification testing for the feedwater system piping is also performed on the initial ESBWR plant. This testing is performed using external thermocouples on the pipe to confirm that the thermal stratification inputs to the piping analysis were conservative.

Measurement Techniques

Verification of acceptable thermal expansion of specified piping systems can be accomplished by several methods. One method is to walk down the piping system and verify visually that free thermal movement is unrestrained. This might include verification that piping supports such as

snubbers and spring hangers are not fully extended or bottomed out and that the piping (including branch lines and instrument lines) and its insulation is not in hard contact with other piping or support structures. Another method involves local measurements, using a hand-held scale or ruler, against a fixed reference or by recording the position of a snubber or spring can. A more precise method uses permanent or temporary instrumentation that directly measures displacement, such as a lanyard potentiometer, that is monitored via a remote indicator or recording device. The technique used depends on such factors as the amount of movement predicted and the accessibility of the piping.

Measurement of piping temperature is also important when evaluating thermal expansion. This is accomplished either indirectly by measuring the temperature of the process fluid or by direct measurement of the piping wall temperature. Such measurements may be obtained either locally or remotely. The choice of technique used depends on such considerations as the accuracy required and the accessibility of the piping.

Monitoring Requirements

As described in Chapter 14, safety-related piping is included in the thermal expansion testing program. Thermal expansion of specified piping systems is measured at both the cold and hot extremes of their expected operating conditions. Walkdowns and recording of hanger and snubber positions are conducted where possible, considering accessibility and local environmental and radiological conditions in the hot and cold states. Displacements and appropriate piping/process temperatures are recorded for those systems and conditions specified. Sufficient time passes before taking such measurements to ensure the piping system is at a steady-state condition. In selecting locations for monitoring piping response, consideration is given to the maximum responses predicted by the piping analysis. Specific consideration is also given to the first run of pipe attached to component nozzles and pipe adjacent to structures requiring a controlled gap.

Test Evaluation and Acceptance Criteria

To ensure test data integrity and test safety, criteria have been established to facilitate assessment of the test while it is in progress. Limits of thermal expansion displacements are established prior to start of piping testing to which the actual measured displacements are compared to determine acceptability of the actual motion. If the measured displacement does not vary from the acceptance limits values by more than the specified tolerance, the piping system is responding in a manner consistent with the predictions and is therefore acceptable. The piping response to test conditions is considered acceptable if the test results indicate that the piping responds in a manner consistent with the predictions of the stress report and/or that piping stresses are within the ASME B&PV Code (NB, NC, ND-3600) limits. Acceptable thermal expansion limits are determined after the completion of piping system stress analysis and are provided in the piping test specifications. Level 1 criteria are bounding based on ASME B&PV Code stress limits. Level 2 criteria are stricter based on the predicted movements using the calculated deflections plus a selected tolerance.

Reconciliation and Corrective Actions

During the course of the tests, the remote measurements are regularly checked to verify compliance with acceptance criteria. If trends indicate that criteria may be violated, the measurements are monitored at more frequent intervals. The test is held for Level 2 criteria

violations, and terminated as soon as Level 1 criteria are violated. As soon as possible after the test hold or termination, investigative and corrective actions are taken. If practicable, a walkdown of the affected piping and suspension system is made to identify potential obstructions to free piping movement. Hangers and snubbers should be positioned within their expected cold and hot settings. All signs of damage to piping or supports are investigated.

Instrumentation indicating criteria failure is checked for proper operation and calibration, including comparison with other instrumentation located in the proximity of the out-of-bounds movement. Assumptions, such as piping temperature, used in the calculations that generated the applicable limits are compared with actual test conditions. Discrepancies noted are accounted for in the criteria limits including possible reanalysis.

Should the investigation of instrumentation and calculations fail to reconcile the criteria violations or should the visual inspection reveal an unintended restraint, physical corrective actions may be required. This might include complete or partial removal of an interfering structure; replacing, readjusting, adding or repositioning piping system supports; modifying the pipe routing; or modifying system operating procedures to avoid the temperature conditions that resulted in the unacceptable thermal expansion.

3.9.2.2 Seismic Qualification of Safety-Related Mechanical Equipment (Including Other RBV Induced Loads)

This subsection describes the criteria for dynamic qualification of safety-related mechanical equipment and associated supports, and the qualification testing and/or analysis applicable to the major components on a component by component basis. Seismic and other events that may induce RBV are considered. In some cases, a module or assembly consisting of mechanical and electrical equipment is qualified as a unit (e.g., HCU). These modules are generally discussed completely in this subsection and Subsection 3.9.3 rather than providing a separate discussion of the electrical parts in Section 3.10. Electrical supporting equipment such as control consoles, cabinets, and panels are discussed in Section 3.10.

3.9.2.2.1 Tests and Analysis Criteria and Methods

The ability of equipment to perform its safety-related function during and after the application of a dynamic load is demonstrated by tests and/or analysis. The analysis is performed in accordance with Section 3.7. Selection of testing, analysis or a combination of the two is determined by the type, size, shape, and complexity of the equipment being considered. When practical, operability is demonstrated by testing. Otherwise, operability is demonstrated by mathematical analysis or by a combination between analysis and test.

Equipment that is large, simple, and/or consumes large amounts of power is usually qualified by analysis or static bend tests to show that the loads, stresses and deflections are less than the allowable maximum. Analysis and/or static bend testing is also used to show there are no natural frequencies below ZPA defined in Subsection 3.7.2.7. If a natural frequency lower than ZPA defined in Subsection 3.7.2.7 in the case of other RBV induced loads is discovered, dynamic tests and/or mathematical dynamic analyses may be used to verify operability and structural integrity at the required dynamic input conditions.

When the equipment is qualified by dynamic test, the response spectrum or time history of the attachment point is used in determining input motion.

Natural frequency may be determined by running a continuous sweep frequency search using a sinusoidal steady-state input of low magnitude. Dynamic load conditions are simulated by testing, using random vibration input or single frequency input (within equipment capability) over the frequency range of interest. Whichever method is used, the input amplitude during testing envelops the actual input amplitude expected during the dynamic loading condition.

The equipment being dynamically tested is mounted on a fixture, which simulates the intended service mounting and causes no dynamic coupling to the equipment. Other interface loads (nozzle loads, weights of internal and external components attached) are simulated.

Equipment having an extended structure, such as a valve operator, is analyzed by applying static equivalent dynamic loads at the center of gravity of the extended structure. In cases where the equipment structural complexity makes mathematical analysis impractical, a static bend test is used to determine spring constant and operational capability at maximum equivalent dynamic load conditions.

Random Vibration Input

When random vibration input is used, the actual input motion envelops the appropriate floor input motion at the individual modes. However, single frequency input such as sine beats can be used provided one of the following conditions are met:

- the characteristics of the required input motion is dominated by one frequency;
- the anticipated response of the equipment is adequately represented by one mode; or
- the input has sufficient intensity and duration to excite all modes to the required magnitude so that the testing response spectra envelops the corresponding response spectra of the individual modes.

Application of Input Modes

When dynamic tests are performed, the input motion is applied to the vertical and one horizontal axis simultaneously. However, if the equipment response along the vertical direction is not sensitive to the vibratory motion along the horizontal direction and vice versa, then the input motion is applied to one direction at a time. In the case of single frequency input, the time phasing of the inputs in the vertical and horizontal directions are such that a purely rectilinear resultant input is avoided.

Fixture Design

The fixture design simulates the actual service mounting and causes no dynamic coupling to the equipment.

Prototype Testing

When possible, equipment testing is conducted on prototypes of the equipment to be installed in the plant. If not, a detailed inspection and justification of the capacity of the equipment tested is made.

3.9.2.2.2 Qualification of Safety-Related Mechanical Equipment

The following subsections discuss the testing or analytical qualification of the safety-related major mechanical equipment, and other ASME B&PV Code equipment including equipment supports.

CRD and CRDH

The qualification of the CRDH (with enclosed CRD) is done analytically, and the stress results of the analysis establish the structural integrity of these components. Dynamic tests are conducted to verify the operability of the CRD during a dynamic event. A simulated test, imposing dynamic deflection in the fuel channels up to values greater than the expected seismic response, is performed.

The correlation of the test with analysis is via the channel deflection, not the housing structural analysis, because insertability is controlled by channel deflection, not housing deflection.

Core Support (Fuel Support and Control Rod Guide Tube)

A detailed analysis imposing dynamic effects due to seismic and other RBV events is performed to show that the maximum stresses developed during these events are much lower than the maximum allowed for the component material.

Hydraulic Control Unit

The HCU is analyzed for the seismic and other RBV loads faulted condition and the maximum stress on the HCU frame is calculated to be below the maximum allowable for the faulted condition. As discussed in Subsection 3.9.1.4, the faulted condition loads are calculated to be below the HCU maximum capability.

Fuel Assembly (Including Channel)

ESBWR fuel channel design bases, analytical methods, and seismic considerations are similar to those contained in References 3.9-1 and 3.9-2. The resulting combined acceleration profiles, including fuel lift for all normal/upset and faulted events are to be shown less than the respective design basis acceleration profiles.

Standby Liquid Control Accumulator

The standby liquid control accumulator is a cylindrical vessel. The standby liquid control accumulator is qualified by analysis for seismic and other RBV loads.

The results of this analysis confirm that the calculated stresses at all investigated locations are less than their corresponding allowable values.

Main Steam Isolation Valves

The MSIVs are qualified for seismic and other RBV loads. The fundamental requirement of the MSIV following a safe shutdown earthquake (SSE) or other faulted RBV loadings is to close and remain closed after the event. This capability is demonstrated by the test and analysis as outlined in Subsection 3.9.3.5.

Standby Liquid Control Valve (Injection Valve)

The standby liquid control injection valve is qualified by type test to IEEE 344 for seismic and other RBV loads. The qualification test as discussed in Subsection 3.9.3.5 demonstrates the

ability to remain operable after the application of horizontal and vertical dynamic loading in excess of the required response spectra. The valve is qualified by dynamic analysis and the results of the analysis indicate that the valve is capable of sustaining the dynamic loads without overstressing the pressure retaining components.

Main Steam Safety Relief Valves

Due to the complexity of the structure and the performance requirements of the valve, the total assembly of the SRV (including electrical and pressure devices) is tested at dynamic accelerations equal to or greater than the combined SSE and other RBV loadings determined for the plant. Tests and analysis as discussed in Subsection 3.9.3.5 demonstrate the satisfactory operation of the valves during and after the test.

Other ASME B&PV Code, Section III Equipment

Other equipment, including associated supports, is qualified for seismic and other RBV loads to ensure its functional integrity during and after the dynamic event. The equipment is tested, if necessary, to ensure its ability to perform its specified function before, during, and following a seismic event.

Dynamic load qualification is done by testing, analysis, or both. Natural frequency, when determined by an exploratory test, is in the form of a single-axis continuous-sweep frequency search using a sinusoidal steady-state input at the lowest possible amplitude, which is capable of determining resonance. The search is conducted on each principal axis with a minimum of two continuous sweeps over the frequency range of interest at a rate no greater than one octave per minute. If no resonances are located, then the equipment is considered rigid and single frequency tests at every 1/3 octave frequency interval are acceptable. Also, if all natural frequencies of the equipment are greater than ZPA defined in Subsection 3.7.2.7, the equipment may be considered rigid and analyzed statically as such. In this static analysis, the dynamic forces on each component are obtained by concentrating the mass at the center of gravity and multiplying the mass by the appropriate floor acceleration. The dynamic stresses are then added to the operating stresses and a determination made of the adequacy of the strength of the equipment. The search for the natural frequency is done analytically if the equipment shape can be defined mathematically or by prototype testing.

If the equipment is a rigid body while its support is flexible, the overall system can be modeled as a single-degree-of-freedom system consisting of a mass and a spring. The natural frequency of the system is computed; then the acceleration is determined from the floor response spectrum curve using the appropriate damping value. A static analysis is then performed using this acceleration value. In lieu of calculating the natural frequency, the peak acceleration from the spectrum curve is used. The critical damping values for welded steel structures from Table 3.7-1 are employed.

If the equipment cannot be considered as a rigid body, it can be modeled as a multi-degree-of-freedom system. It is divided into a sufficient number of mass points to ensure adequate representation. The mathematical model can be analyzed using modal analysis techniques or direct integration of the equations of motion. Specified structural damping is used in the analysis unless justification for other values can be provided. A stress analysis is performed using the appropriate inertial forces or equivalent static loads obtained from the dynamic analysis of each mode.

For a multi-degree-of-freedom modal analysis, the modal response accelerations can be taken directly from the applicable floor response spectrum. The maximum spectral values within ±10% band of the calculated frequencies of the equipment are used for computation of modal dynamic response inertial loading. The total dynamic stress is obtained by combining the modal stresses. The dynamic stresses are added to the operating stresses using the loading combinations stipulated in the specific equipment specification and then compared with the allowable stress levels.

If the equipment being analyzed has no required orientation, the worst possible orientation is considered. Furthermore, equipment is considered to be in its operational configuration (i.e., filled with the appropriate fluid and/or solid). The investigation ensures that the point of maximum stress is considered. Lastly, a check is made to ensure that partially filled or empty equipment does not result in higher response than the operating condition. The analysis includes evaluation of the effects of the calculated stresses on mechanical strength, alignment, electrical performance (microphonics, contact bounce, etc.) and non-interruption of function. Maximum displacements are computed and interference effects determined and justified.

Individual devices are tested separately, when necessary, in their operating condition. Then the component to which the device is assembled is tested with a similar but inoperative device installed.

The equipment, component, or device to be tested is mounted on the vibration generator in a manner that simulates the final service mounting. If the equipment is too large, other means of simulating the service mounting are used. Support structures such as consoles, racks, etc., may be vibration tested without the equipment or devices being in operation provided they are performance tested after the vibration test. However, the components are in their operational configuration during the vibration test. The goal is to determine that, at the specified vibratory accelerations, the support structure does not amplify the forces beyond that level to which the devices have been qualified.

Alternatively, equipment may be qualified by presenting historical performance data, which demonstrate that the equipment satisfactorily sustains dynamic loads which are equal to or greater than those specified for the equipment and that the equipment performs a function equal to or better than that specified for it.

Equipment for which continued function is not required after a seismic and other RBV loads event, but whose postulated failure could produce an unacceptable influence on the performance of systems having a primary safety-related function, are also evaluated. Such equipment is qualified to the extent required to ensure that an SSE including other RBV loads, in combination with normal operating conditions, would not cause unacceptable failure. Qualification requirements are satisfied by ensuring that the equipment in its functional configuration, complete with attached appurtenances, remains structurally intact and affixed to the interface. The structural integrity of internal components is not required; however, the enclosure of such components is required to be adequate to ensure their confinement. Where applicable, fluid or pressure boundary integrity is demonstrated. With a few exceptions, simplified analytical techniques are adequate for this purpose.

Historically, it has been shown that the main cause of equipment damage during a dynamic excitation has been the failure of its anchorage. Stationary equipment is designed with anchor

bolts or other suitable fastening strong enough to prevent overturning or sliding. The effect of friction on the ability to resist sliding is neglected. The effect of upward dynamic loads on overturning forces and moments is considered. Unless specified otherwise, anchorage devices are designed in accordance with the requirements of the ASME B&PV Code, Subsection NF, or ANSI/AISC-N690 and ACI 349.

Dynamic design data are provided in the form of acceleration response spectra for each floor area of the equipment. Dynamic data for the ground or building floor to which the equipment is attached are used. For the case of equipment having multiple supports with different dynamic motions, an upper bound envelope of all the individual response spectra for these locations is used to calculate maximum inertial responses of items with multiple supports.

Refer to Subsection 3.9.3.5 for additional information on the dynamic qualification of valves.

Supports

Subsections 3.9.3.7 and 3.9.3.8 address analyses or tests that are performed for component supports to assure their structural capability to withstand seismic and other dynamic excitations.

3.9.2.3 Dynamic Response of Reactor Internals Under Operational Flow Transients and Steady-State Conditions

[*The major reactor internal components within the vessel are subjected to extensive testing, coupled with dynamic system analyses, to properly evaluate the resulting FIV phenomena during normal reactor operation and from anticipated operational transients.*

In general, the vibration forcing functions for operational flow transients and steady-state conditions are not predetermined by detailed analysis. The vibration forcing functions for operational flow transients and steady state conditions are determined by first postulating the source of the forcing function, such as forces due to flow turbulence, symmetric and asymmetric vortex shedding, pressure waves from steady state and transient operations. Based on these postulates, prior startup and other test data from similar or identical components are examined for the evidence of the existence of such forcing functions. Special analysis of the response signals measured for reactor internals of many similar designs is performed to obtain the parameters, which determine the amplitude and modal contributions in the vibration responses. Based on these examinations, the magnitudes of the forcing functions and response amplitudes are derived. These magnitudes are then used to calculate the expected ESBWR responses for each component of interest during steady state and transient conditions. This study provides useful predictive information for extrapolating the results from tests of components with similar designs. This vibration prediction method is appropriate where standard hydrodynamic theory cannot be applied due to complexity of the structure and flow conditions. Elements of the vibration prediction method are outlined as follows:

- *Dynamic modal analysis of major components and subassemblies is performed to identify vibration modes and frequencies. The analysis models used for Seismic Category I structures are similar to those outlined in Subsection 3.7.2.*
- *Data from previous plant vibration measurements are assembled and examined to identify predominant vibration response modes of major components. In general, response modes are similar but response amplitudes vary among Boiling Water Reactors (BWRs) of differing size and design.*

- *Parameters are identified which are expected to influence vibration response amplitudes among the several reference plants. These include hydraulic parameters such as velocity and steam flow rates and structural parameters such as natural frequency and significant dimensions.*
- *Correlation functions of the parameters are developed which, multiplied by response amplitudes, tend to minimize the statistical variability between plants. A correlation function is obtained for each major component and response mode.*
- *Predicted vibration amplitudes for components of the prototype plants are obtained from these correlation functions based on applicable values of the parameters for the prototype plants. The predicted amplitude for each dominant response mode is stated in terms of a range, taking into account the degree of statistical variability in each of the correlations. The predicted mode and frequency are obtained from the dynamic modal analyses.*

The dynamic modal analysis forms the basis for interpretation of the initial startup test results (Subsection 3.9.2.4). Modal stresses are calculated and relationships are obtained between sensor response amplitudes and peak component stresses for each of the lower normal modes.

Details of the special signal analyses of the vibration sensors are given below:

The test data from sensors (accelerometers, strain gages, and pressure sensors) installed on reactor internal components are first analyzed through signal processing equipment to determine the spectral characteristics of these signals. The spectral peak magnitudes and the frequencies at the spectral peaks are then determined. These spectral peak frequencies are then classified as natural frequencies or forced frequencies. If a spectral peak is classified as being from a natural frequency, its amplitude is then determined using a band-pass filter if deemed necessary. The resultant amplitude is then identified as the modal response at that frequency. This process is used for all frequencies of interest. Thus the modal amplitudes at all frequencies of interest are determined. If a spectral peak is identified as being from a forced frequency, the source (such as the vane passing frequency of a pump) is identified. Again, its magnitude is determined using a band-pass filter if deemed necessary.

The modal amplitudes and the forced response amplitudes are then used to calculate the expected ESBWR amplitudes for the same component. These ESBWR expected amplitudes are determined by calculating the expected changes in the forcing function magnitudes from the test component to the ESBWR component. For example, for flow turbulence excited components, the magnitudes are determined by ratio with the flow velocity squared.

A flow chart of the above process is shown in Figure 3.9-6.

The allowable vibratory amplitude in each mode is that which produces a peak stress amplitude of ±68.95 MPa (±10,000 psi). For the steam dryer and its components, a higher allowable peak stress limit is used as explained in the following paragraphs.

Vibratory loads are continuously applied during normal operation and the stresses are limited to ±68.95 MPa (±10,000 psi), with the exception of the steam dryer, in order to prevent fatigue failure. Prediction of vibration amplitudes, mode shapes, and frequencies of normal reactor operations are based on statistical extrapolation of actual measured results on the same or similar components in reactors now in operation.

Extensive predictive evaluations have been performed for the steam dryer loading and structural evaluation. These evaluations are described in Appendix 3L.4. In the dryer design and in the development of the initial strain and accelerations acceptance limits used during startup, the fatigue analysis performed for the ESBWR steam dryer uses a fatigue limit stress amplitude of 93.7 MPa (13,600 psi). For the outer hood component, which is subjected to higher pressure loading in the region of the main steamlines, the fatigue limit stress amplitude is 74.4 MPa (10,800 psi). Following the startup testing of the first unit or if an acceptance limit is reached during power ascension, the load FIV load definition is defined from the recorded dryer pressure or dryer pressure and steam line data. The load definition bias and uncertainty is benchmarked against the dryer pressure sensor data. A structural assessment is performed to benchmark the FE model strain and acceleration predictions against the measured data. The dryer peak stress based on test data, adjusted for load, FE model, and instrument bias and uncertainties, is then calculated and maintained less than 93.7 MPa (13,600 psi). The subsequent ESBWR steam dryers includes dryer FIV monitoring via main steam line instruments. The acceptance limits for subsequent plants is based on assuring that the stresses remain less than 93.7 MPa (13,600 psi) allowable stress. The limit is justified because first steam dryer is heavily instrumented, subsequent plants is also monitored for FIV loads, and the load and response is explicity evaluated based on test data with consideration of bias and uncertainty. The steam dryer is a nonsafety-related component, performs no safety-related functions, and is only required to maintain its structural integrity (no loose parts generated) for normal, transient and accident conditions.

The dynamic loads caused by FIV of the steam separators have been determined using a full-scale separator test under reactor conditions. During the test, the flow rate through the steam separator was 226,000 kg/hr (499,000 lbm/hr) at 7% quality. This is higher than the ESBWR maximum separator flow of 100,700 kg/hr (222,000 lbm/hr) at rated power. Test results show a maximum FIV stress of less than 49.6 MPa (7200 psi), well below the GEH acceptance criterion of 68.9 MPa (10,000 psi). Thus it can be concluded that separator FIV effects are acceptable. Jet impingement from feedwater flow has no significant effect on the steam separator assembly since the separator outer-most cylindrical structure (also referred to as the separator "skirt") is above the feedwater flow impingement area.]*

* Text sections that are bracketed and italicized with an asterisk following the brackets are designated as Tier 2*. Prior Nuclear Regulatory Commission (NRC) approval is required to change.

3.9.2.4 Initial Startup Flow Induced Vibration Testing of Reactor Internals

A reactor internals vibration measurement and inspection program is conducted only during initial startup testing. This meets the guidelines of RG 1.20 with the exception of those requirements related to preoperational testing which cannot be performed for a natural circulation reactor.

Initial Startup Testing

Vibration measurements are made during reactor startup at conditions up to 100% rated flow and power. Steady state and transient conditions of natural circulation flow operation are evaluated. The primary purpose of this test series is to verify the anticipated effect of single- and two-phase flow on the vibration response of internals. Details of the initial startup vibration test program

are described in Subsection 3L.4.6 for the steam dryer and Section 3L.5 for other reactor internals. A brief summary is given below.

Vibration sensor types may include strain gauges, displacement sensors (linear variable transformers), and accelerometers.

Accelerometers are provided with double integration signal conditioning to give a displacement output. Sensor locations are provided in Appendix 3L.

In all plant vibration measurements, only the dynamic component of strain or displacement is recorded. Data are recorded and provision is made for selective on-line analysis to verify the overall quality and level of the data. Interpretation of the data requires identification of the dominant vibration modes of each component by the test engineer using frequency, phase, and amplitude information for the component dynamic analyses. Comparison of measured vibration amplitudes to predicted and allowable amplitudes is then to be made on the basis of the analytically obtained normal mode that best approximates the observed mode.

The visual inspections conducted prior to and remote inspections conducted following startup testing are for damage, excessive wear, or loose parts. At the completion of initial startup testing, remote inspections of major components are performed on a selected basis. The remote inspections cover the steam dryer chimney, chimney head, core support structures, the peripheral CRD and incore housings. Access is provided to the reactor lower plenum for these inspections.

The analysis, design and equipment that are to be utilized for ESBWR comply with RG 1.20, as explained below.

RG 1.20 describes a comprehensive vibration assessment program for reactor internals during preoperational and initial startup testing. The vibration assessment program meets the requirements of Criterion 1, Quality Standards and Records, Appendix A to 10 CFR 50. This RG is applicable to the core support structures and other reactor internals.

Vibration testing of reactor internals is performed on all GE-BWR plants. Since the original issue of RG 1.20, test programs for compliance have been instituted for preoperational and startup testing. The first ESBWR plant is instrumented for testing. However, it can be subjected to startup flow testing only to demonstrate that FIVs similar to those expected during operation do not cause damage. Subsequent plants, which have internals similar to those of the first plant, are also tested in compliance with the requirements of RG 1.20. GEH is committed to confirm the satisfactory vibration performance of the internals in these plants through startup flow testing followed by inspection. Extensive vibration measurements in prototype plants together with satisfactory operating experience in all BWR plants have established the adequacy of reactor internal designs. GEH continues these test programs for subsequent plants to verify structural integrity and to establish the margin of safety. The FIV evaluation program pertaining to reactor internal components is addressed in Appendix 3L.

The Combined License (COL) Applicant will classify its reactor per the guidance in RG 1.20 and provide a milestone for submitting a description of the inspection and measurement programs to be performed (including measurement locations and analysis predictions) and the results of the vibration analysis, measurement and test program (COL 3.9.9-1-A).

3.9.2.5 Dynamic System Analysis of Reactor Internals Under Faulted Conditions

The faulted events that are evaluated are defined in Subsection 3.9.5.3. The loads that occur as a result of these events and the analysis performed to determine the response of the reactor internals are as follows:

(1) Reactor Internal Pressures — The reactor internal pressure differentials (Table 3.9-3) due to an assumed break of a main steamline (MSL) or feedwater line (FWL) are determined by analysis as described in Subsection 3.9.5.3. In order to assure that no significant dynamic amplification of load occurs as a result of the oscillatory nature of the blowdown forces during an accident, a comparison is made of the periods of the applied forces and the natural periods of the core support structures being acted upon by the applied forces. These periods are determined from comprehensive horizontal and vertical dynamic models of the RPV and internals. Besides the real masses of the RPV and core support structures, account is made for the water inside the RPV.

(2) External Pressure and Forces on the Reactor Vessel — An assumed break of the MSL, the FWL or the Reactor Water Cleanup/Shutdown Cooling (RWCU/SDC) line at the reactor vessel nozzle results in jet reaction and impingement forces on the vessel and asymmetrical pressurization of the annulus between the reactor vessel and the shield wall. These time-varying pressures are applied to the dynamic model of the reactor vessel system. Except for the nature and locations of the forcing functions, the dynamic model and the dynamic analysis method are identical to those for seismic analysis as described below. The resulting loads on the reactor internals, defined as loss-of-coolant-accident (LOCA) loads, are considered as shown in Table 3.9-1.

(3) SRV Loads — The discharge of the SRVs results in RBVs due to suppression pool dynamics as described in Appendix 3B. The response of the reactor internals to the RBV is also determined with the dynamic model and dynamic analysis method described below for seismic analysis.

(4) LOCA Loads — The assumed LOCA also results in RBV due to suppression pool dynamics as described in Appendix 3B and the response of the reactor internals are again determined with the dynamic model and dynamic analysis method used for seismic analysis. Various types of LOCA loads are identified on Table 3.9-1.

(5) Seismic Loads — The theory, methods, and computer codes used for dynamic analysis of the reactor vessel, internals, attached piping and adjoining structures are described in Section 3.7 and Subsection 3.9.1.2. Dynamic analysis is performed by coupling the lumped-mass model of the reactor vessel and internals with the building model to determine the system natural frequencies and mode shapes. The relative displacement, acceleration, and load response are then determined by either the time-history method or the response-spectrum method. The loads on the reactor internals due to a faulted event SSE are obtained from this analysis.

The above loads are considered in combination as defined in Table 3.9-2. The SRV, LOCA (Small Break LOCA (SBL), Intermediate Break LOCA (IBL) or Large Break LOCA (LBL)) and SSE loads as defined in Table 3.9-1 are all assumed to act in the same direction. The peak colinear responses of the reactor internals to each of these loads are added by the square root of the sum of the squares (SRSS) method. The resultant stresses in the reactor internal structures

are directly added with stress resulting from the static and steady state loads in the faulted load combination, including the stress due to peak reactor internal pressure differential during the LOCA. The reactor internals satisfy the stress deformation and fatigue limits defined in Subsection 3.9.5.4.

3.9.2.6 Correlations of Reactor Internals Vibration Tests with the Analytical Results

Prior to initiation of the instrumented vibration measurement program for a prototype plant, extensive dynamic analyses of the reactor and internals are performed. The results of these analyses are used to generate the allowable vibration levels during the vibration test. The vibration data obtained during the test are analyzed in detail.

The results of the data analyses, vibration amplitudes, natural frequencies, and mode shapes are then compared to those obtained from the theoretical analysis.

Such comparisons provide the analysts with added insight into the dynamic behavior of the reactor internals. The additional knowledge gained from previous vibration tests has been used in the generation of the dynamic models for seismic and LOCA analyses for this plant. The models used for this plant are similar to those used for the vibration analysis of earlier prototype BWR plants.

3.9.3 ASME B&PV Code Class 1, 2 and 3 Components, Component Supports and Core Support Structures

This subsection discusses the structural integrity of pressure-retaining components, their supports, and core support structures which are designed in accordance with the rules of the ASME B&PV Code, Section III, Division 1 and GDC 1, 2, 4, 14, and 15 as discussed in SRP 3.9.3.

The plant design meets the relevant requirements of the following regulations:

(1) 10 CFR Part 50.55a and GDC 1 as they relate to structures and components being designed, fabricated, erected, constructed, tested, and inspected to quality standards commensurate with the importance of the safety-related function to be performed.

(2) GDC 2 as it relates to safety-related structures and components being designed to withstand the effects of earthquakes combined with the effects of normal or accident conditions.

(3) GDC 4 as it relates to safety-related structures and components being designed to accommodate the effects of and to be compatible with the environmental conditions of normal and accident conditions.

(4) GDC 14 as it relates to the RCPB being designed, fabricated, erected, and tested to have an extremely low probability of abnormal leakage, of rapidly propagating failure, and of gross rupture.

(5) GDC 15 as it relates to the reactor coolant system being designed with sufficient margin to ensure that the design conditions are not exceeded.

The ASME B&PV Code, Section III, requires that a design specification be prepared for ASME Class 1, 2 and 3 components. The design specifications for ASME Class 1, 2 and 3 components, supports, and appurtenances are prepared under administrative procedures that meet the ASME

B&PV Code rules. The specifications conform to and are certified to the requirements of the applicable subsection of the ASME B&PV Code, Section III. The ASME B&PV Code also requires design reports for Class 1, 2 or 3 components be prepared which demonstrate that the as-built components satisfy the requirements of the respective ASME design specification for each component and the applicable ASME B&PV Code. These design specifications and the design reports are completed by the license applicant, or the applicant's authorized agent, in accordance with the responsibilities outlined under the ASME B&PV Code, Section III. The ASME B&PV Code design reports include the record of as-built reconciliations, for example, the evaluations of changes to piping support locations, the pre-operational testing and results, and reported construction deviation resolutions, and also includes the small-bore piping analysis.

3.9.3.1 Loading Combinations, Design Transients and Stress Limits

This section delineates the criteria for selection and definition of design limits and loading combinations associated with normal operation, postulated accidents, and specified seismic and other RBV events for the design of safety-related ASME B&PV Code components (except containment components which are discussed in Section 3.8).

This section discusses the ASME Class 1, 2, and 3 equipment and associated pressure-retaining parts and identifies the applicable loadings, calculation methods, calculated stresses, and allowable stresses. A discussion of major equipment is included on a component-by-component basis to provide examples. Design transients and dynamic loading for ASME Class 1, 2 and 3 equipment are covered in Subsection 3.9.1.1. Seismic-related loads and dynamic analyses are discussed in Section 3.7. The suppression pool-related RBV loads are described in Appendix 3B. Table 3.9-1 presents the plant events to be considered for the design and analysis of all ESBWR ASME B&PV Code Class 1, 2, and 3 components, component supports, core support structures and equipment. Specific loading combinations considered for evaluation of specific equipment are derived from Table 3.9-2 and are contained in the design specifications and design reports for the respective equipment. For Class I components where analysis for cyclic operation is evaluated in accordance with ASME B&PV Code, Section III, subarticle NB-3222.4, the fatigue usage evaluation shall include the use of environmental fatigue curves in accordance with RG 1.207 and NUREG/CR-6909.

[*Specific load combinations and acceptance criteria for Class 1 piping are shown in Table 3.9-9. Also for Class 1 piping, the operating temperatures above ambient or below ambient are included in the fatigue analysis. Even the ambient temperature is included as a load set with defined cycles. The stress-free state for the piping system is defined as a temperature of 21°C (70°F) for Class 1, 2, 3 or B31.1 piping. For Class 2, 3 or B31.1 piping, no thermal expansion analysis will be performed for a piping system operating at 65°C (150°F) or less.*]*

The design life for the ESBWR Standard Plant is 60 years. A 60-year design life is a requirement for all major plant components.. However, all plant operational components and equipment except the reactor vessel are designed to be replaceable.. The design life requirement allows for refurbishment and repair, as appropriate, to assure that the design life of the overall plant is achieved. In effect, essentially all piping systems, components and equipment are designed for a 60-year design life. Many of these components are classified as ASME Class 2 or 3 or Quality Group D.

The COL Applicant will provide a milestone for completing the required equipment stress reports, per ASME B&PV Code, Subsection NB, for equipment segments that are subject to loadings that could result in thermal or dynamic fatigue and for updating the Final Safety Analysis Report (FSAR), as necessary, to address the results of the analysis (COL 3.9.9-2-A).

[*In the event any non-Class 1 component is subjected to cyclic loadings of a magnitude and/or duration so severe that the 60-year design life cannot be assured by required ASME B&PV Code calculations, applicants referencing the ESBWR design shall identify these components and either provide an appropriate analysis to demonstrate the required design life, or provide designs to mitigate the magnitude or duration of the cyclic loads. For example, thermal sleeves may be required to protect the pressure boundary from severe cyclic thermal stress, at points where mixing of hot and cold fluids occur. For ESBWR, these locations include the SRV discharge line going to the quencher and the feedwater pipe within the steam tunnel at the reactor water cleanup (RWCU) junction.*]*

* Text sections that are bracketed and italicized with an asterisk following the brackets are designated as Tier 2*. Prior NRC approval is required to change.

3.9.3.1.1 Plant Conditions

All events that the plant might credibly experience during a reactor-year are evaluated to establish the design basis for plant equipment. These events are divided into four plant conditions. The plant conditions described in the following paragraphs are based on event probability (i.e., frequency of occurrence) as discussed below and correlated to service levels for design limits defined in the ASME B&PV Code Section III as shown in Tables 3.9-1 and 3.9-2.

Normal Condition

Normal conditions are any conditions in the course of system startup, operation in the design power range, normal hot standby (with condenser available), and system shutdown other than upset, emergency, faulted, or testing.

Upset Condition

An upset condition is any deviation from normal conditions anticipated to occur often enough that design should include a capability to withstand the conditions without operational impairment. The upset conditions include system operational transients, i.e., AOOs, as defined in 10 CFR 50, Appendix A, which result from any single operator error or control malfunction, from a fault in a system component requiring its isolation from the system, or from a loss of load or power. Hot standby with the main condenser isolated is an upset condition.

Emergency Condition

An emergency condition includes deviations from normal conditions that require shutdown for correction of the condition(s) or repair of damage in the RCPB. Such conditions have a low probability of occurrence but are included to provide assurance that no gross loss of structural integrity results as a concomitant effect of any damage developed in the system. Emergency condition events include but are not limited to infrequent operational transients (IOT), e.g., infrequent events, as defined in Subsection 15.0.1.2, caused by one of the following: (a) a multiple valve blowdown of the reactor vessel; (b) LOCA from a small break or crack (SBL) which does not depressurize the reactor systems, does not automatically actuate the Gravity-

Driven Cooling System (GDCS) and Automatic Depressurization System (ADS), and does not result in leakage beyond normal make-up system capacity, but which requires the safety-related functions of isolation of containment and shutdown and may involve inadvertent actuation of the ADS; (c) improper assembly of the core during refueling; or (d) depressurization valve (DPV) blowdown. An Anticipated Transient Without Scram (ATWS) or reactor overpressure with delayed scram (Tables 3.9-1 and 3.9-2) is a special event, as defined in Subsection 15.0.1.2, that is classified as an emergency condition.

Faulted Condition

A faulted condition is any of those combinations of conditions associated with extremely low-probability postulated events whose consequences are such that the integrity and operability of the system may be impaired to the extent that considerations of public health and safety are involved. Faulted conditions encompass events, such as a LOCA, that are postulated because their consequences would include the potential for the release of significant amounts of radioactive material. These events are the most drastic that must be considered in the design and thus represent limiting design bases. Faulted condition events include but are not limited to one of the following: (a) a fuel-handling accident; (b) a MSL or FWL break; (c) the combination of any SBL or IBL with the SSE, and a loss of off-site power; or (d) the SSE plus LBL plus a loss of off-site power.

The IBL classification covers those breaks for which the GDCS operation occurs during the blowdown. The LBL classification covers the sudden, double-ended severance of a MSL inside or outside the containment that results in transient reactor depressurization, or any pipe rupture of equivalent flow cross-sectional area with similar effects.

Correlation of Plant Condition with Event Probability

The probability of an event occurring per reactor-year associated with the plant conditions is listed below. This correlation identifies the appropriate plant conditions and assigns the appropriate ASME Section III service levels for any hypothesized event or sequence of events.

[*Plant Condition*	*ASME B&PV Code Service Level*	*Event Encounter Probability per Reactor Year*
Normal (planned)	*A*	*1.0*
Upset (moderate probability)	*B*	$1.0 > P \geq 10^{-2}$
Emergency (low probability)	*C*	$10^{-2} > P \geq 10^{-4}$
Faulted (extremely low probability)	*D*	$10^{-4} > P > 10^{-6}$]*

Safety-Related Functional Criteria

For any normal or upset design condition event, safety-related equipment and piping (Section 3.2) are capable of accomplishing their safety-related functions as required by the event and incurring no permanent changes that could deteriorate their ability to accomplish safety-related functions as required by any subsequent design-condition event.

For any emergency or faulted design-condition event, safety-related equipment and piping are capable of accomplishing their safety-related functions as required by the event, but repairs could be required to ensure their ability to accomplish safety-related functions as required by any subsequent design-condition event.

* Text sections that are bracketed and italicized with an asterisk following the brackets are designated as Tier 2*. Prior NRC approval is required to change.

3.9.3.1.2 Inspections/Testing Following the Reactor Coolant System Exceeding Service Level B Pressure Limit

[*If any abnormal event causes the reactor coolant system pressure to exceed 110% of its design value (i.e., exceed the ASME B&PV Code Service Level B pressure limit), an inspection program should be satisfactorily completed, before normal plant operations may proceed. Within ASME B&PV Code, Section XI, Subarticles IWB-2400 and IWB-2500 there are inspection specifications that can determine the structural integrity of the reactor coolant system components directly affected by the pressurization event. Therefore, if the pressure of the reactor coolant system exceeds its ASME B&PV Code Service Level B limit, then an inspection program will be established based on an assessment of all potentially affected safety-related reactor coolant system components, and subsequent inspections or testing per the appropriate portions of ASME B&PV Code, Section XI, Subarticles IWB-2400 and IWB-2500 will be performed and evaluated against the ASME B&PV Code acceptance criteria, prior to commencement of normal power operations.*]*

* Text sections that are bracketed and italicized with an asterisk following the brackets are designated as Tier 2*. Prior NRC approval is required to change.

3.9.3.2 Reactor Pressure Vessel Assembly

The reactor vessel assembly includes: the RPV boundary out to and including the nozzles and housings for FMCRD and in-core instrumentations; vessel sliding support, and shroud support.

[*The RPV, vessel sliding support, and shroud support are designed and constructed in accordance with the ASME B&PV Code. The shroud support consists of support legs and a support ring. The RPV is ASME Class 1, and the RPV internals are classified in Subsection 3.9.5. Complete stress reports on these components are prepared in accordance with the ASME B&PV Code requirements. The guidance from NUREG-0619 and associated Generic Letters 80-95 and 81-11 is factored into the feedwater nozzle and sparger design. The feedwater nozzle/sparger design does not allow incoming feedwater flow to have direct contact with the nozzle bore region, and the double thermal sleeve design adds further protection against thermal cycling on the nozzle.*]* Also see Subsection 3.9.5.2 for additional information.

[*The stress analysis is performed on the RPV, vessel sliding support, and shroud support for various plant operating conditions (including faulted conditions) by using elastic methods, except as noted in Subsection 3.9.1.4.*]* Loading conditions, design stress limits, and methods of stress analysis for the core support structures and other reactor internals are discussed in Subsection 3.9.5.

* Text sections that are bracketed and italicized with an asterisk following the brackets are designated as Tier 2*. Prior NRC approval is required to change.

3.9.3.3 Main Steam System Piping

[*The piping systems extending from the RPV to and including the outboard MSIV are designed and constructed in accordance with the ASME B&PV Code Section III, Class 1 criteria. Stresses are calculated on an elastic basis for each service level and evaluated in accordance with NB-3600 of the ASME B&PV Code. Table 3.9-9 shows the specific load combinations and acceptance criteria for Class 1 piping that apply to this piping. For the MS Class 1 piping, the thermal loads per Equation 12 of NB-3600 are less than 2.4* S_m*, and are more limiting than the dynamic loads that are required to be analyzed per Equation 13 of NB-3600.*

The MS system piping extending from the outboard MSIV to the turbine stop valve is constructed in accordance with the ASME B&PV Code, Class 2 Criteria.]*

* Text sections that are bracketed and italicized with an asterisk following the brackets are designated as Tier 2*. Prior NRC approval is required to change.

3.9.3.4 Other Components

Standby Liquid Control (SLC) Accumulator

The standby liquid control accumulator is designed and constructed in accordance with the requirements of the ASME B&PV Code, as a Class 2 component.

SLC Injection Valve

The SLC injection valve is designed and constructed in accordance with the requirements for the ASME B&PV Code, as a Class 1 component.

GDCS Piping and Valves

The GDCS valves connected with the RPV, including squib valves, and up to and including the biased-open check valve are designed and constructed in accordance with the requirements of the ASME B&PV Code, as Class 1 components. Other valves in the system are Class 2 components.

Main Steamline Isolation, Safety Relief, and Depressurization Valves

[*The MSIVs, SRVs, and DPVs are designed and constructed in accordance with the ASME B&PV Code, NB-3500 requirements for Class 1 components.*]*

Safety Relief Valve Piping

The relief valve discharge piping extending from the relief valve discharge flange to the vent wall penetration is designed and constructed in accordance with the ASME B&PV Code requirements for Class 3 components. The relief valve discharge piping extending from the diaphragm floor penetration to the quenchers is designed and constructed in accordance with the ASME B&PV Code requirements for Class 3 components.

Isolation Condenser System (ICS) Condenser and Piping

The ICS piping inside the primary containment between the RPV and the condenser isolation valve is designed and constructed in accordance with the ASME B&PV Code requirements for Class 1 piping. The isolation condenser and piping outside containment are designed and constructed in accordance with Class 2 requirements.

RWCU/SDC System Pump and Heat Exchangers

The RWCU/SDC pump and heat exchangers (regenerative and nonregenerative) are not part of a safety system. However, the pumps and heat exchanger are Seismic Category I equipment. The ASME B&PV Code requirements for Class 3 components are used in the design and construction of the RWCU System pump and heat exchanger components.

ASME Class 2 and 3 Vessels

The Class 2 and 3 vessels (all vessels not previously discussed) are constructed in accordance with the ASME B&PV Code. The stress analysis of these vessels is performed using elastic methods.

ASME Class 1, 2 and 3 Valves

The Class 1, 2, and 3 valves (all valves not previously discussed) are constructed in accordance with the ASME B&PV Code.

All valves and their extended structures are designed to withstand the accelerations due to seismic and other RBV loads. The attached piping is supported so that these accelerations are not exceeded. The stress analysis of these valves is performed using elastic methods. Refer to Subsection 3.9.3.5 for additional information on valve operability.

ASME Class 1, 2 and 3 Piping

[*The Class 1, 2 and 3 piping (all piping not previously discussed) is constructed in accordance with the ASME B&PV Code. For Class 1 piping, stresses are calculated on an elastic basis and evaluated in accordance with NB-3600 of the ASME B&PV Code, and fatigue usage is in accordance with RG 1.207 and NUREG/CR-6909.*]* For Class 2 and 3 piping, stresses are calculated on an elastic basis and evaluated in accordance with NC/ND-3600 of the ASME B&PV Code. In the event that a NB-3600 analysis is performed for Class 2 or 3 pipe, all analyses required for Class 1 pipe as specified in this document and the ASME B&PV Code are performed. Table 3.9-9 shows the specific load combinations and acceptance criteria for Class 1 piping systems. [*For the Class 1 piping that experiences the most significant stresses during operating conditions, the thermal loads per Equation 12 of NB-3600 are less than 2.4 S_m, and are more limiting than the dynamic loads that are required to be analyzed per Equation 13 of NB-3600. The piping considered in this category is the RWCU/SDC, feedwater, MS, and isolation condenser steam piping within the containment.*]* These were evaluated to be limiting based on differential thermal expansion, pipe size, transient thermal conditions and high energy line conditions. If ASME B&PV Code Case N-122-2 is used for analysis of a class 1 pipe, the analysis complying with this case is included in the design report for the piping system.

For submerged piping and associated supports, the applicable direct external loads (e.g., hydrodynamic) applied to the submerged components are included in the analysis.

* Text sections that are bracketed and italicized with an asterisk following the brackets are designated as Tier 2*. Prior NRC approval is required to change.

3.9.3.5 Valve Operability Assurance

This subsection discusses operability assurance of active ASME B&PV Code valves, including actuators (Subsection 3.9.2.2).

[*Valves that perform an active safety-related function are functionally qualified to perform their required functions. For valve designs developed for the ESBWR that were not previously qualified, the qualification programs meet the requirements of QME-1-2007. For valve designs previously qualified to standards other than ASME QME-1-2007, the following approach is used.*

- *The ESBWR general valve requirements specification includes requirements related to design and functional qualification of safety-related valves that incorporate lessons learned from nuclear power plant operations and research programs.*
- *Qualification specifications (e.g., design specifications) consistent with Appendices QV-I and QV-A of QME-1-2007 are prepared to ensure the operating conditions and safety functions for which the valves are to be qualified are communicated to the manufacturer or qualification facility.*
- *Suppliers are required to submit, for GE Hitachi Nuclear Energy (GEH) review and approval, application reports, as described in QME-1-2007, that describe the basis for the application of specific predictive methods and/or qualification test data to a valve application.*
- *GEH reviews the application reports provided by the suppliers for adherence to specification requirements to ensure the methods used are applicable and justified and to verify any extrapolation techniques used are justified. A gap analysis is performed to identify any deviations from QME-1-2007 in the valve qualification. Each deviation is evaluated for impact on the overall valve qualification. If the conclusion of the gap analysis is that the valve qualification is inadequate, then the valve may be qualified using a test-based methodology, as allowed by QME-1-2007.*
- *GEH performs independent sizing calculations, using bounding design parameters (such as sliding friction coefficients), to verify supplier actuator sizing.*

Functional qualification addresses key lessons learned from industry efforts, particularly on air- and motor-operated valves, many of which are discussed in Section QV-G of QME-1-2007.]* For example:

- Evaluation of valve performance is based on a combination of testing and analysis, using design similarity to apply test results to specific valve designs.
- Testing to verify proper valve setup and acceptable operating margin is performed using diagnostic equipment to measure stem thrust and torque, as appropriate.
- Sliding friction coefficients used to evaluate valve performance (e.g., disk-to-seat friction coefficients for gate valves and bearing coefficients for butterfly valves) account for the effects of temperature, cycle history, load and internal parts geometry.
- Actuator sizing allows margin for aging/degradation, test equipment accuracy and other uncertainties, as appropriate.
- Material combinations that may be susceptible to galling or other damage mechanisms under certain conditions are not used.

Subsection 3.9.2.2 and Section 3.10 provide details on the seismic qualification of valves. Section 3.11 provides details on the environmental qualification (EQ) of valves.

Section 4.4 of GEH's EQ Program (Reference 3.9-3) applies to this subsection, and the seismic qualification methodology presented therein is applicable to mechanical as well as electrical equipment.

* Text sections that are bracketed and italicized with an asterisk following the brackets are designated as Tier 2*. Prior NRC approval is required to change.

3.9.3.5.1 Major Active Valves

Some of the major safety-related active valves (Table 3.2-1) discussed in this subsection for illustration are the MSIVs and SRVs, and SLC injection valves and DPVs. These valves are designed to meet the ASME B&PV Code requirements and perform their mechanical motion in conjunction with a dynamic (SSE and other RBV) load event. These valves are supported entirely by the piping (i.e., the valve operators are not used as attachment points for piping supports) (Subsection 3.9.3.7). The dynamic qualification for operability is unique for each valve type; therefore, each method of qualification is detailed individually below.

Main Steam Isolation Valves

The MSIVs described in Subsection 5.4.5.2 are evaluated by analysis and test for capability to operate under the design loads that envelop the predicted loads during a design basis accident (DBA) and SSE.

The valve body is designed, analyzed and tested in accordance with the ASME B&PV Code, Class 1 requirements. The MSIVs are modeled mathematically in the MSL system analysis. The loads, amplified accelerations and resonance frequencies of the valves are determined from the overall steamline analysis. The piping supports (snubbers, rigid restraints, etc.) are located and designed to limit amplified accelerations of and piping loads in the valves to the design limits.

The MSIV and associated electrical equipment (wiring, solenoid valves, and position switches) are dynamically qualified to operate during an accident condition.

Main Steam Safety Relief Valves

The typical SRV design described in Subsection 5.2.2.2 is qualified by type test to IEEE 344 for operability during a dynamic event. Structural integrity of the configuration during a dynamic event is demonstrated by both the ASME B&PV Code Class 1 analysis and test.

- The valve is designed for maximum moments on inlet and outlet, which may be imposed when installed in service. These moments are resultants due to dead weight plus dynamic loading of both valve and connecting pipe, thermal expansion of the connecting pipe, and reaction forces from valve discharge.
- A production SRV is demonstrated for operability during a dynamic qualification (shake table) type test with moment and loads applied greater than the required equipment's design limit loads and conditions.

A mathematical model of this valve is included in the MSL system analysis, as with the MSIVs. This analysis ensures the equipment design limits are not exceeded.

Standby Liquid Control Valve (Injection Valve)

The typical SLC injection valve design is qualified by type test to IEEE 344. The valve body is designed, analyzed and tested per the ASME B&PV Code, Class 1. The qualification test demonstrates the ability to remain operable after the application of the horizontal and vertical dynamic loading exceeding the predicted dynamic loading.

Depressurization Valves

The DPV design described in Subsection 6.3.2.8 is qualified by test to IEEE 344 for operability during a dynamic event. Structural integrity of the configuration during dynamic events is demonstrated by both the ASME B&PV Code Class 1 analysis and test.

- The valve is designed for maximum moments on the inlet that may be imposed when installed in service. These moments are resultants due to dead weight plus dynamic loading of both valve and connecting pipe, thermal expansion of the connecting pipe, and reaction forces from valve discharge.
- A production DPV is demonstrated for operability after the performance of a dynamic qualification (shake table) type test with moment and loads applied greater than the required equipment's design limit loads and conditions.

A mathematical model of this valve is included in the ICS system analysis. These analyses assure that the equipment design limits are not exceeded.

3.9.3.5.2 Other Active Valves

Other safety-related active valves are ASME B&PV Code Class 1, 2 or 3 and are designed to perform their mechanical motion during dynamic loading conditions. The operability assurance program ensures that these valves operate during a dynamic seismic and other RBV event.

Procedures

Qualification tests accompanied by analyses are conducted for all active valves. Procedures for qualifying electrical and instrumentation components, which are depended upon to cause the valve to accomplish its intended function, are described in Section 3.10.

Tests

Prior to installation of the safety-related valves, the following tests are performed: (1) shell hydrostatic test to the ASME B&PV Code requirements; (2) back seat and main seat leakage tests; (3) disk hydrostatic test; (4) functional tests to verify that the valve opens and closes within the specified time limits when subject to the design differential pressure; and (5) operability qualification of valve actuators for the environmental conditions over the installed life. EQ procedures for operation follow those specified in Section 3.11. The results of all required tests are properly documented and included as a part of the operability acceptance documentation package.

Dynamic Load Qualification

The functionality of an active valve during and after a seismic and other RBV event may be demonstrated by an analysis or by a combination of analysis and test. The qualification of electrical and instrumentation components controlling valve actuation is discussed in

Section 3.10. The valves are designed using either stress analyses or the pressure temperature rating requirements based upon design conditions. An analysis of the extended structure is performed for static equivalent dynamic loads applied at the center of gravity of the extended structure. Refer to Subsection 3.9.2.2 for further details.

The maximum stress limits allowed in these analyses confirm structural integrity and are the limits developed and accepted by the ASME for the particular ASME Class of valve analyzed.

When qualification of mechanisms that must change position to complete their safety-related function is based on dynamic testing or equivalent static load testing, operability testing is performed for the loads defined by the applicable events and conditions per Subsection 3.9.1.1 and Table 3.9-1.

The dynamic qualification testing procedure for valve operability is outlined below. A subject valve assembly is mounted in a test stand or fixture in a manner that conservatively represents typical valve installation(s). Each test valve assembly includes the actuator and accessories that are attached to an inservice valve. Additional discussion of test criteria and method is provided in Subsection 3.9.2.2, and also in the portions of Subsections 3.10.1 and 3.10.2 applicable to active valve assemblies.

Dynamic load qualification is accomplished in the following way:

(1) The active valves are designed to have a fundamental frequency that is greater than the high frequency asymptote of the dynamic event. This is shown by suitable test or analysis.

(2) The actuator and yoke of the valve system is statically loaded to an amount greater than that due to a dynamic event. The load is applied at the center of gravity to the actuator alone in the direction of the weakest axis of the yoke. The simulated operational differential pressure is simultaneously applied to the valve during the static deflection tests.

(3) The valve is then operated while in the deflected position (i.e., from the normal operating position to the safe position). The valve is verified to perform its safety-related function within the specified operating time limits.

(4) Powered valve actuators and other accessory components directly attached onto the valve or actuator that are necessary for operation are qualified as operable during a dynamic event by appropriate qualification tests prior to installation on the valve. The powered actuator assemblies then have individual Seismic Category I supports attached to decouple the dynamic loads between the actuators and valves themselves.

The piping, stress analysis, and pipe support designs maintain the actuator assembly accelerations below the qualification levels with adequate margin of safety.

If the fundamental frequency of the valve, by test or analysis, is less than that for the ZPA, a dynamic analysis of the valve is performed to determine the equivalent acceleration to be applied during the static test. The analysis provides the amplification of the input acceleration considering the natural frequency of the valve and the frequency content of the applicable plant floor response spectra. The adjusted accelerations have been determined using the same conservatism contained in the horizontal and vertical accelerations used for rigid valves. The adjusted acceleration is then used in the static analysis and the valve operability is assured by the methods outlined in Steps (2) through (4), using the modified acceleration input. Alternatively, the valve, including the actuator and other accessories, is qualified by a shake table test.

Valves that are safety-related but can be classified as not having an overhanging structure, such as check valves and pressure-relief valves, are considered as follows:

Check Valves

Due to the particular simple characteristics of the check valves, the active check valves are qualified by a combination of the following tests and analysis:

- Stress analysis including the dynamic loads where applicable;
- In-shop hydrostatic tests;
- In-shop seat leakage test; and
- Periodic in-situ valve exercising and inspection to assure the functional capability of the valve.

Pressure-Relief Valves

The active pressure relief valves are qualified as follows. These valves are subjected to test and analysis similar to check valves, stress analyses including the dynamic loads, in-shop hydrostatic seat leakage, and performance tests. In addition to these tests, periodic in-situ valve inspection, as applicable, and periodic valve removal, refurbishment, performance testing, and reinstallation are performed to assure the functional capability of the valve. Tests of the relief valve under dynamic loading conditions demonstrate that valve actuation can occur during application of the loads. The tests include pressurizing the valve inlet with nitrogen and subjecting the valve to accelerations equal to or greater than the dynamic event (SSE plus other RBV) loads.

Qualification of Electrical and Instrumentation Components Controlling Valve Actuation

A practical problem arises in attempting to describe tests for devices (relays, motors, sensors, etc.) as well as for complex assemblies such as control panels. It is reasonable to assume that a device, as an integral part of an assembly, can be subjected to dynamic loads tests while in an operating condition and its performance monitored during the test. However, in the case of complex panels, such a test is not always practical. In such a situation, the following alternate approach may be followed.

The individual devices are tested separately in an operating condition and the test levels recorded as the qualification levels of the devices. The panel, with similar devices installed but inoperative, is vibration tested to determine if the panel response accelerations, as measured by accelerometers installed at the device attachment locations, are less than the levels at which the devices were qualified. Installing the non-operating devices assures that the test panel has representative structural characteristics. If the acceleration levels at the device locations are found to be less than the levels to which the device is qualified, then the total assembly is considered qualified. Otherwise, either the panel is redesigned to reduce the acceleration level to the device locations and retested, or the devices are requalified to the higher levels.

Documentation

All of the preceding requirements are satisfied to demonstrate that functionality is assured for active valves. The documentation is prepared in a format that clearly shows that each consideration has been properly evaluated, and a designated quality assurance representative has

validated the tests. The analysis is included as a part of the certified stress report for the assembly.

3.9.3.6 Design and Installation of Pressure Relief Devices

Main Steam Safety Relief Valves

SRV lift in the MS piping system results in a transient that produces momentary unbalanced forces acting on the MS and SRV discharge piping system for the period from opening of the SRV until a steady discharge flow from the RPV to the suppression pool is established. This period includes clearing of the water slug from the end of the discharge piping submerged in the suppression pool. Pressure waves traveling through the MS and discharge piping following the relatively rapid opening of the SRV cause this piping to vibrate.

[*The analysis of the MS and discharge piping transient due to SRV discharge consists of a stepwise time-history solution of the fluid flow equation to generate a time history of the fluid properties at numerous locations along the pipe. The fluid transient properties are calculated based on the maximum set pressure specified in the steam system specification and the value of the ASME B&PV Code flow rating, increased by a factor to account for the conservative method of establishing the rating. Simultaneous discharge of all valves in a MS line is assumed in the analysis because simultaneous discharge is considered to induce maximum stress in the piping.*]* Reaction loads on the pipe are determined at each location corresponding to the position of an elbow. These loads are composed of pressure-times-area, momentum-change, and fluid-friction terms.

[*The method of analysis applied to determine response of the MS piping system, including the SRV discharge line, to relief valve operation is time-history integration. The forces are applied at locations on the piping system where fluid flow changes direction, thus causing momentary reactions.*]* The resulting loads on the SRV, the MSL, and the discharge piping are combined with loads due to other effects as specified in Subsection 3.9.3.1. In accordance with Tables 3.9-1 and 3.9-2, the ASME B&PV Code stress limits for service levels corresponding to load combination classification as normal, upset, emergency, and faulted are applied to the MS and discharge pipe.

Many of the SRV design parameters and criteria are specified in Sections 5.2 and 15.2. The procurement specification for the SRV defines the SRV requirements that are necessary to be consistent with the SRV parameters used in the steam line stress analysis.

Other Safety Relief and Vacuum Breaker Valves

An SRV is identified as a pressure relief valve or vacuum breaker. SRVs in the reactor components and subsystems are described and identified in Subsection 5.4.13.

The operability assurance program discussed in Subsection 3.9.3.5 applies to the SRVs.

ESBWR SRVs and vacuum breakers are designed and manufactured in accordance with the ASME B&PV Code requirements.

[*The design of ESBWR SRVs incorporates SRV opening and pipe reaction load considerations required by ASME B&PV Code, Appendix O, and including the additional criteria of SRP, Subsection 3.9.3, Paragraph II.2 and those identified under NB-3658 of the ASME B&PV Code for pressure and structural integrity.*]* Safety relief and vacuum relief valve and vacuum relief

operability is demonstrated either by dynamic testing or analysis of similarly tested valves or a combination of both in compliance with the requirements of SRP Subsection 3.9.3.

Depressurization Valves

The instantaneous opening of a DPV due to the explosion of the DPV operator results in a transient that produces impact loads and momentary unbalanced forces acting on the ICS and DPV piping system. The impact load forcing functions associated with DPV operation used in the piping analyses are determined by test. From the test data a representative force time-history is developed and applied as input to a time-history analysis of the piping. If these loads are defined to act in each of the three orthogonal directions, the responses are combined by the SRSS method. The momentary unbalanced forces acting on the piping system are calculated and analyzed using the methods described above for SRV lift analysis.

The resulting loads on the DPV, the ICS lines, and the DPV piping are combined with loads due to other effects as specified in Subsection 3.9.3.1. In accordance with Tables 3.9-1 and 3.9-2, the ASME B&PV Code stress limits for service levels corresponding to load combination classification as normal, upset, emergency, and faulted are applied to the ICS and DPV discharge piping.

* Text sections that are bracketed and italicized with an asterisk following the brackets are designated as Tier 2*. Prior NRC approval is required to change.

3.9.3.7 Component Supports

[*The establishment of the design/service loadings and limits is in accordance with the ASME Section III, Division 1, Article NCA-2000 and Subsection NF. These loadings and stress limits apply to the structural integrity of components and supports when subjected to combinations of loadings derived from plant and system operating conditions and postulated plant events. The combination of loadings and stress limits are included in the Design Specification of each component and support. Where the design and service stress limits specified in the ASME B&PV Code do not necessarily provide direction for the proper consideration of operability requirements for conditions which warrant consideration, Section II.3 and Appendix A of SRP 3.9.3, and Regulatory Guides 1.124 and 1.130 are used for guidance.*]* Where these stress limits apply, the treatment of functional capability, including collapse, deformation and deflection limits are evaluated and appropriate information is developed for inclusion into the Design Specification.

[*ASME Section III component supports shall be designed, manufactured, installed and tested in accordance with all applicable codes and standards. Supports include hangers, snubbers, struts, spring hangers, frames, energy absorbers and limit stops. Pipe whip restraints are not considered as pipe supports.*

The design of bolts for component supports is specified in the ASME B&PV Code, Subsection NF. Stress limits for bolts are given in NF-3225. The rules and stress limits which must be satisfied are those given in NF-3324.6 multiplied by the appropriate stress limit factor for the particular service loading level and stress category specified in Table NF-3225.2-1.

Moreover, on equipment which is to be, or may be, mounted on a concrete support, sufficient holes for anchor bolts are provided to limit the anchor bolt stress to less than 68.95 MPa (10,000 psi) on the nominal bolt area in shear or tension.

The design and installation of all anchor bolts is performed in accordance with Appendix B to ACI 349 "Anchoring to Concrete," subject to the conditions and limitations specified in RG 1.199.]*

It is preferable to attach pipe supports to embedded plates; however, surface-mounted base plates with undercut anchor bolts can be used in the design and installation of supports for safety–related components.

* Text sections that are bracketed and italicized with an asterisk following the brackets are designated as Tier 2*. Prior NRC approval is required to change.

3.9.3.7.1 Piping Supports

[*Supports and their attachments for safety-related Code Class 1, 2, and 3 piping are designed in accordance with Subsection NF up to the interface of the building structure, with jurisdictional boundaries as defined by Subsection NF. The design of the nuclear power plant structures, systems, and components will provide access for the performance of inservice testing and inservice inspection as required by the applicable ASME Code. The building structure component supports (connecting the NF support boundary component to the existing building structure) are designed in accordance with ANSI/AISC N690, Nuclear Facilities-Steel Safety-Related Structures for Design, Fabrication and Erection, or the AISC Specification for the Design, Fabrication, and Erection of Structural Steel. The applicable loading combinations and allowables used for design of supports are shown on Tables 3.9-10, -11, and -12. The stress limits are per ASME B&PV Code, Subsection NF and Appendix F.*]*

Maximum calculated static and dynamic deflections of the piping at support locations do not exceed the allowable limits specified in the piping design specification.

[*Seismic Category II pipe supports are designed so that the SSE would not cause unacceptable structural interaction or failure. Support design follows the intent and general requirement specified in ASME B&PV Code, Nonmandatory Appendix F. This is used to evaluate the total design load condition with respect to the requirements of the SSE condition to ensure the structural integrity of the pipe supports are maintained.*]*

The design of supports for the non-nuclear piping satisfies the requirements of ASME B31.1 Power Piping Code, Paragraphs 120 and 121.

For the major active valves identified in Subsection 3.9.3.5, the valve operators are not used as attachment points for piping supports.

[*The friction loads caused by unrestricted motion of the piping due to thermal displacements are considered to act on the support with a friction coefficient of 0.3, in the case of steel-to-steel friction.*]* For stainless steel, Teflon, and other materials, the friction coefficient could be less. The friction loads are not considered during seismic or dynamic loading evaluation of pipe support structures.

[*For the design of piping supports, a deflection limit of 1.6 mm (1/16 in.) for erection and operation loadings is used, based on Welding Resource Council bulletin WRC-353 paragraph 2.3.2. For the consideration of loads due to SSE and in the cases involving springs, the deflection limit is increased to 3.2 mm (1/8 in.).*

For frame type supports, the total gap is limited to 3.2 mm (1/8 inch).]* In general, this gap is adequate to avoid thermal binding due to radial thermal expansion of the pipe. For large pipes with higher temperatures, this gap is evaluated to assure that no thermal binding occurs. The minimum total gap is specified to ensure that it is adequate for the thermal radial expansion of the pipe to avoid any thermal binding.

The small bore lines (e.g., small branch and instrumentation lines) are supported taking into account the flexibility, and thermal and dynamic motion requirements of the pipe to which they connect. Subsection 3.7.3.16 provides details for the support design and criteria for instrumentation lines 50 mm (2 in.) and less where it is acceptable practice by the regulatory agency to use piping handbook methodology.

The design criteria and dynamic testing requirements for the ASME B&PV Code piping supports are as follows:

(1) Piping Supports—All piping supports are designed, fabricated, and assembled so that they cannot become disengaged by the movement of the supported pipe or equipment after they have been installed. All piping supports are designed in accordance with the rules of Subsection NF of the ASME B&PV Code up to the building structure interface as defined by the jurisdictional boundaries in Subsection NF.

(2) Spring Hangers—The operating load on spring hangers is the load caused by dead weight. The hangers are calibrated to ensure that they support the operating load at both their hot and cold load settings. Spring hangers provide a specified down travel and up travel in excess of the specified thermal movement.

(3) Snubbers—The operating loads on snubbers are the loads caused by dynamic events (e.g., seismic, RBV due to LOCA, SRV and DPV discharge, discharge through a relief valve line, or valve closure) during various operating conditions. Snubbers restrain piping against response to the dynamic excitation and to the associated differential movement of the piping system support anchor points. The criteria for locating snubbers and ensuring adequate load capacity, the structural and mechanical performance parameters used for snubbers, and the installation and inspection considerations for the snubbers are as follows:

a. Required Load Capacity and Snubber Location

The loads calculated in the piping dynamic analysis cannot exceed the snubber load capacity for design, normal, upset, emergency and faulted conditions.

Snubbers are generally used in situations where dynamic support is required because thermal growth of the piping prohibits the use of rigid supports. The snubber locations and support directions are first decided by estimation so that the stresses in the piping system have acceptable values. The snubber locations and support directions are refined by performing the dynamic analysis of the piping and support system as described above in order that the piping stresses and support loads meet the ASME B&PV Code requirements.

The pipe support design specification requires that snubbers be provided with position indicators to identify the rod position. This indicator facilitates the checking of hot and cold settings of the snubber, as specified in the installation manual, during plant preoperational and startup testing.

b. Inspection, Testing, Repair and/or Replacement of Snubbers

The pipe support design specification requires that the snubber supplier prepare an installation instruction manual. This manual is required to contain complete instructions for the testing, maintenance, and repair of the snubber. It also contains inspection points and the period of inspection. [*The program for inservice examination and testing of snubbers in the completed ESBWR construction is prepared in accordance with the requirements of ASME OM Code, Subsection ISTD, and the applicable industry and regulatory guidance including RG 1.192. The intervals for visual examination are the subject of Code Case OMN-13, which is accepted under the RG 1.192. The preparation and submittal of a program for the inservice testing and examination of snubbers is addressed in Subsection 3.9.9.*]*

The pipe support design specification requires that hydraulic snubbers be equipped with a fluid level indicator so that the level of fluid in the snubber can be ascertained easily.

The spring constant achieved by the snubber supplier for a given load capacity snubber is compared against the spring constant used in the piping system model. If the spring constants are the same, then the snubber location and support direction become confirmed. If the spring constants are not in agreement, they are brought in agreement, and the system analysis is redone to confirm the snubber loads. This iteration is continued until all snubber load capacities and spring constants are reconciled.

A thermal motion monitoring program is established for verification of snubber movement, adequate clearance and gaps, including motion measurements and acceptance criteria to assure compliance with ASME B&PV Code, Section III Subsection NF.

c. Snubber Design and Testing

To assure that the required structural and mechanical performance characteristics and product quality are achieved, the following requirements for design and testing are imposed by the design specification:

(i) The snubbers are required by the pipe support design specification to be designed in accordance with the rules and regulations of the ASME B&PV Code, Section III, Subsection NF and consider the following:

- Design requirements include analysis for normal, upset, emergency and faulted loads. Calculated loads are then compared against allowable loads as established by snubber vendor.
- Swing angles, as supplied by the snubber vendor, are incorporated into the design. Pipe movements in the horizontal and vertical direction are taken into account to prevent end bracket/paddle plate binding.
- Snubber stiffness, as supplied by the snubber vendor, is included in the piping analysis. Other support components such as the pipe clamp, extension piece and transition tube and structural auxiliary steel stiffness values are incorporated into the final determination of the stiffness value used in the analysis.

In multiple snubber applications where mismatch of end fitting clearance and lost motion could possibly exist, the synchronism of activation level or release rate is evaluated, if deemed necessary, in the piping analysis model when this application could be considered critical to the functionality of the system, such as a multiple snubber application located near rotating equipment. Equal load sharing of multiple snubber supports is not assumed if a mismatch in end fitting clearances exists and is evaluated as a part of this assessment.

(ii) A list of snubbers on systems which experience sufficient thermal movement to measure cold to hot position is provided as part of the testing program after the piping analysis has been completed.

(iii) The snubbers are tested to ensure that they can perform as required during the seismic and other RBV events, and under anticipated operational transient loads or other mechanical loads associated with the design requirements for the plant. Production and qualification test programs for both hydraulic and mechanical snubbers are carried out by the snubber vendors in accordance with the snubber installation instruction manual required to be furnished by the snubber supplier. Acceptance criteria to assure compliance with ASME B&PV Code Section III Subsection NF, and other applicable codes, standards and requirements are as follows:

- Snubber production and qualification test programs are carried out by strict adherence to the manufacturer's snubber installation and instruction manual, which is prepared by the snubber manufacturer and subjected to review by the applicant for compliance with the applicable provisions of the ASME B&PV Code of record. The test program is periodically audited during implementation by the applicant for compliance.
- All snubbers will be inspected and tested for compliance with the design drawings and functional requirements of the procurement specifications.
- [*All snubbers are inspected and tested. No sampling methods may be used in the qualification tests.*
- *All snubbers are load rated by testing in accordance with the snubber manufacturer's testing program and in compliance with the applicable sections of ASME QME-1-2007, Subsection QDR and ASME OM Code, Subsection ISTD.*
- *Design compliance of the snubbers per ASME B&PV Code Section III Paragraph NF-3128, and Subparagraphs NF-3411.3 and NF-3412.4.*
- *The snubbers are tested for various abnormal environmental conditions. Upon completion of the abnormal environmental transient test, the snubber is tested dynamically at a frequency within a specified frequency range. The snubber must operate normally during the dynamic test. The functional parameters cited in Subparagraph NF-3412.4 are included in the snubber qualification and testing program. Other parameters in accordance with applicable ASME QME-1-2007 and the ASME OM Code will be incorporated.*

- *The codes and standards used for snubber qualification and production testing are as follows:*
  - *ASME B&PV Code Section III (Code of Record date) and Subsection NF.*
  - *ASME QME-1-2007, Subsection QDR and ASME OM Code, Subsection ISTD.*
- *All large bore hydraulic snubbers include full Service Level D load testing, including verifying bleed rates, control valve closure within the specified velocity ranges and drag forces/breakaway forces are acceptable in accordance with ASME QME-1-2007 and ASME OM Codes.*]*

(iv) All safety-related components that utilize snubbers in their support systems will be identified and inserted into the Final Safety Analysis Report in table format and will include the following:

- identification of systems and components
- number of snubbers utilized in each system and on that component
- snubber type (s) – (hydraulic or mechanical) – and name of supplier
- constructed to ASME B&PV Code Section III, Subsection NF or other
- snubber use such as shock, vibration, or dual purpose
- those snubbers identified as dual purpose or vibration arrestor type, will include an indication if both snubber and component were evaluated for fatigue strength

d. Snubber Installation Requirements

An installation instruction manual is required by the pipe support design specification. This manual is required to contain instructions for storage, handling, erection, and adjustments (if necessary) of snubbers. Each snubber has an installation location drawing that contains the installation location of the snubber on the pipe and structure, the hot and cold settings, and additional information needed to install the particular snubber.

e. Snubber Preservice and Inservice Examination and Testing

Preservice Examination and Testing

The preservice examination plan for snubbers is prepared in accordance with the requirements of the ASME Code for Operation and Maintenance of Nuclear Power Plants (OM Code), Subsection ISTD, and the additional requirements of this section. The preservice examinations are made after snubber installation but not more than 6 months prior to initial system pre-operational testing. The preservice examination verifies the following:

(i) There are no visible signs of damage or impaired operability as a result of storage, handling, or installation.

(ii) The snubber load rating, location, orientation, position setting, and configuration (attachments, extensions, etc.) are according to design drawings and specifications.

(iii) Snubbers are not seized, frozen or jammed.

(iv) Adequate swing clearance is provided to allow snubber movements.

(v) If applicable, fluid is to the recommended level and is not to be leaking from the snubber system.

(vi) Structural connections such as pins, fasteners and other connecting hardware such as lock nuts, tabs, wire, cotter pins are installed correctly.

If the period between the initial preservice examination and initial system pre-operational tests exceeds 6 months, reexamination of Items i, iv, and v is performed. Snubbers that are installed incorrectly or otherwise fail to meet the above requirements are repaired or replaced and re-examined in accordance with the above criteria.

Inservice Examination and Testing

[*The inservice examination and testing plan for snubbers is prepared in accordance with the requirements of the ASME OM Code, Subsection ISTD and is in conformance with the relevant requirements of 10 CFR 50 Part B, Appendix A, GDC 1.*]* The COL Applicant will provide a full description of the snubber preservice and inservice inspection and test programs and a milestone for program implementation. See COL item 3.9.9-4-A.

f. Snubber support data

A plant-specific table will be included as part of the inspection and test program for snubbers (see Subsection 3.9.9) and will include the following information:

(i) the general functional requirement (i.e., shock, vibration, dual purpose) for each system and component using snubbers including the number and location of each snubber. If either dual-purpose or arrestor type, indicate whether the snubber or component was evaluated for fatigue strength,

(ii) operating environment,

(iii) applicable codes and standards,

(iv) list type of snubber (i.e., hydraulic, mechanical), materials of construction, standards for hydraulic fluids and lubricants, and the corresponding supplier,

(v) environmental, structural, and performance design verification tests,

(vi) production unit functional verification tests and certification,

(vii) packaging, shipping, handling, and storage requirements,

(viii) description of provisions for attachments and installation, and

(ix) quality assurance and assembly quality control procedures for review and acceptance by the purchaser.

(4) Struts — Struts are defined as ASME Section III, Subsection NF, Component Standard Supports. They consist of rigid rods pinned to a pipe clamp or lug at the pipe and pinned to a clevis attached to the building structure or supplemental steel at the other end. Struts, including the rod, clamps, clevises, and pins, are designed in accordance with the ASME B&PV Code, Subsection NF-3000.

Struts are passive supports, requiring little maintenance and inservice inspection, and are normally used instead of snubbers where dynamic supports are required and the movement of the pipe due to thermal expansion and/or anchor motions is small. Struts are not used at locations where restraint of pipe movement to thermal expansion significantly increases the secondary piping stress ranges or equipment nozzle loads.

Because of the pinned connections at the pipe and structure, struts carry axial loads only. The design loads on struts may include those loads caused by thermal expansion, dead weight, and the inertia and anchor motion effects of all dynamic loads. As in the case of other supports, the forces on struts are obtained from an analysis, and are confirmed not to exceed the design loads for various operating conditions.

(5) Frame Type (Linear) Pipe Supports — Frame type pipe supports are linear supports as defined as ASME Section III, Subsection NF, Component Standard Supports. They consist of frames constructed of structural steel elements that are not attached to the pipe. They act as guides to allow axial and rotational movement of the pipe but act as rigid restraints to lateral movement in either one or two directions. Frame type pipe supports are designed in accordance with the ASME B&PV Code, NF-3000.

Frame type pipe supports are passive supports, requiring little maintenance and inservice inspection, and are normally used instead of struts when they are more economical or where environmental conditions are not suitable for the ball bushings at the pinned connections of struts. Similar to struts, frame type supports are not used at locations where restraint of pipe movement to thermal expansion significantly increases the secondary piping stress ranges or equipment nozzle loads.

The design loads on frame type pipe supports include those loads caused by thermal expansion, dead weight, and the inertia and anchor motion effects of all dynamic loads. As in the case of other supports, the forces on frame type supports are obtained from an analysis, which are assured not to exceed the design loads for various operating conditions.

Any hot or cold gaps required by the qualifying pipe stress analysis results are incorporated in the design. Where friction between the pipe and frame support occurs as a result of sliding, an appropriate coefficient of friction is used in order to calculate friction loading on the support. Seismic inertia loads as well as static seismic loads are considered in the design of frame supports covered by ASME Section III Subsection NF.

For insulated pipes, special pipe guides with one or two-way restraint (two or four trunnions welded to a pipe clamp) may be used in order to minimize the heat loss of piping systems. For small bore pipe guides, it could be acceptable to cut the insulation around the support frame, although this must be indicated in the support specification.

(6) Special Engineered Pipe Supports are not used

* Text sections that are bracketed and italicized with an asterisk following the brackets are designated as Tier 2*. Prior NRC approval is required to change.

3.9.3.7.2 Reactor Pressure Vessel Sliding Supports

[*The ESBWR RPV sliding supports are sliding supports as defined by NF-3124 of the ASME B&PV Code and are designed as an ASME B&PV Code Class 1 component support per the requirements of the ASME B&PV Code, Subsection NF.*]* The loading conditions and stress criteria are given in Tables 3.9-1 and 3.9-2, and the calculated stresses meet the ASME B&PV Code allowable stresses at all locations for various plant operating conditions. The stress level margins assure the adequacy of the RPV sliding supports.

* Text sections that are bracketed and italicized with an asterisk following the brackets are designated as Tier 2*. Prior NRC approval is required to change.

3.9.3.7.3 Reactor Pressure Vessel Stabilizer

The RPV stabilizer is designed as a safety-related linear type component support in accordance with the requirements of ASME B&PV Code Section III, Subsection NF. The stabilizer provides a reaction point near the upper end of the RPV to resist horizontal loads caused by effects such as earthquake, pipe rupture, and RBV. The design loading conditions and stress criteria are given in Table 3.9-2, and the calculated stresses meet the ASME B&PV Code allowable stresses in the critical support areas for various plant operating conditions.

3.9.3.7.4 Floor-Mounted Major Equipment

Because the major active valves are supported by piping and not tied to building structures, valve "supports" do not exist.

The condensers in the Isolation Condenser System (ICS) and Passive Containment Cooling System (PCCS) are analyzed to verify the adequacy of their support structure under various plant operating conditions. The analysis applies the maximum sheer, moment, and accelerations calculated from the seismic response analysis for the Reactor Building at the attachment locations on the pool floor. In the analysis, no credit is taken for damping effects of the pool water. Additionally, the mass of the condensers is increased by an amount equivalent to the weight of water they displace. This conservative factor accounts for the hydrodynamic effects that include impulsive loads and convective loads (sloshing of the pool water). In all cases, the load stresses in the critical support areas are within ASME B&PV Code allowables.

3.9.3.8 Other ASME B&PV Code Component Supports

The ASME B&PV Code component supports and their attachments (other than those discussed in the preceding subsection) are designed in accordance with Subsection NF of the ASME B&PV Code up to the interface with the building structure. The intermediate building structural steel component supports are designed in accordance with the codes as specified in Section 3.8. The loading combinations for the various operating conditions correspond to those used to design the supported component. The component loading combinations are discussed in Subsection 3.9.3.1. Active component supports are discussed in Subsection 3.9.3.7. The stress limits are per ASME B&PV Code, Subsection NF and Appendix F. The supports are evaluated for buckling in accordance with ASME B&PV Code.

3.9.3.9 Threaded Fasteners – ASME B&PV Code Class 1, 2 and 3

3.9.3.9.1 Material Selection

[*Material used for threaded fasteners complies with the requirements of ASME B&PV Code Section III NB-2000, NC-2000, ND-2000 or NF-2000 as appropriate. Fracture toughness testing is performed in accordance with ASME B&PV Code Section III NB-2300, NC-2300 or ND-2300, as appropriate.*]* For verification of conformance to the applicable ASME B&PV Code requirements, a chemical analysis is required for each heat of material and testing for mechanical properties is required on samples representing each heat of material and, where applicable, each heat treat lot.

The criteria of ASME B&PV Code Section III NB-2200, NC-2200 or ND-2200 rather than the material specification criteria applicable to the mechanical testing shall be applied if there is a conflict between the two sets of criteria. For safety-related threaded fasteners, documentation related to fracture toughness (as applicable) and certified material test reports are provided as part of the ASME B&PV Code records that are provided at the time the parts are shipped, and are part of the required records that are maintained at the site.

Threaded fasteners are selected for compatibility with the materials of the component being joined and the piping system fluids. The selection process considers deterioration which may occur during service as a result of corrosion, radiation effects, or instability of material.

* Text sections that are bracketed and italicized with an asterisk following the brackets are designated as Tier 2*. Prior NRC approval is required to change.

3.9.3.9.2 Special Materials Fabrication Processes and Special Controls

[*The design of threaded fasteners complies with ASME B&PV Code Section III NB-3000, NC-3000 or ND-3000, as appropriate. Fabrication of threaded fasteners complies with ASME B&PV Code Section III NB-4000, NC-4000 or ND-4000, as appropriate. Inspection of threaded fasteners complies with ASME B&PV Code Section III NB-2500, NC-2500 or ND-2500, as applicable.*]*

Lubricants with deliberately added halogens, sulfur, or lead are not used for any RCPB components or other components in contact with reactor water. Lubricants containing molybdenum sulfide (disulfide or polysulfide) are not to be used for any safety-related application. For ferritic steel threaded fasteners, conversion coatings, such as the Parkerizing process are suitable and may be used. If fasteners are plated, low melting point materials, such as zinc, tin, cadmium, etc., are not used.

* Text sections that are bracketed and italicized with an asterisk following the brackets are designated as Tier 2*. Prior NRC approval is required to change.

3.9.3.9.3 Preservice and Inservice Inspection Requirements

[*Preservice Inspection (PSI) and Inservice inspection is performed in accordance with ASME B&PV Code, Section XI.*]* The requirements for pressure retaining Class 1 bolting are addressed as Category B-G-1 for bolting greater than 2 inches in diameter and B-G-2 for bolting with diameters 2 inches and less. The Class 1 pressure retaining bolting sample is limited to the

bolting on the heat exchangers, piping, pumps, and valves that are selected for examination in the in-service inspection program.

Category B-G-2 requires visual, VT-1, examination of the selected bolting. For Class 1, 2 and 3 systems, the bolted connections are examined for leakage (VT-2) during the system pressure tests required by ASME Section XI. For safety-related threaded fasteners, documentation related to PSI is provided as part of the ASME B&PV Code records that are provided at the time the parts are shipped, and are part of the required records that are maintained at the site.

* Text sections that are bracketed and italicized with an asterisk following the brackets are designated as Tier 2*. Prior NRC approval is required to change.

3.9.4 Control Rod Drive System

This subsection addresses the CRD system as discussed in SRP 3.9.4. The CRD system consists of the control rods and the related mechanical components that provide the means for mechanical movement. As discussed in GDC 26 and 27, the CRD system provides one of the independent reactivity control systems. The rods and the drive mechanisms are capable of reliably controlling reactivity changes either under conditions of AOOs, or under postulated accident conditions. A positive means for inserting the rods is always maintained to ensure appropriate margin for malfunction, such as stuck rods. Because the CRD system is a safety-related system and portions of the CRD system are a part of the RCPB, the system is designed, fabricated, and tested to quality standards commensurate with the safety-related functions to be performed. This provides an extremely high probability of accomplishing the safety-related functions either in the event of AOOs or in withstanding the effects of postulated accidents and natural phenomena such as earthquakes, as discussed in GDC 1, 2, 14, 26, 27 and 29 and 10 CFR 50.55a.

The plant design meets the requirements of the following regulations:

(1) GDC 1 and 10 CFR 50.55a, as they relate to the CRD system being designed to quality standards commensurate with the importance of the safety-related functions to be performed.

(2) GDC 2, as it relates to the CRD system being designed to withstand the effects of an earthquake without loss of capability to perform its safety-related functions.

(3) GDC 14, as it relates to the RCPB portion of the CRD system being designed, constructed, and tested for the extremely low probability of leakage or gross rupture.

(4) GDC 26, as it relates to the CRD system being one of the independent reactivity control systems that is designed with appropriate margin to assure its reactivity control function under conditions of normal operation including AOOs.

(5) GDC 27, as it relates to the CRD system being designed with appropriate margin, and in conjunction with the emergency core cooling system, being capable of controlling reactivity and cooling the core under postulated accident conditions.

(6) GDC 29, as its relates to the CRD system, in conjunction with reactor protection systems, being designed to assure an extremely high probability of accomplishing its safety-related functions in the event of AOOs.

The CRD system includes electrohydraulic FMCRD mechanisms, the HCU assemblies, the condensate supply system, and power for FMCRD motors. The system extends inside RPV to the coupling interface with the control rod blades.

3.9.4.1 Descriptive Information on Control Rod Drive System

Descriptive information on the FMCRDs as well as the entire CRD system is contained in Subsection 4.6.1.

3.9.4.2 Applicable Control Rod Drive System Design Specification

The CRD system, which is designed to meet the functional design criteria outlined in Subsection 4.6.1, consists of the following:

- electro-hydraulic fine motion control rod drive;
- HCU;
- hydraulic power supply (pumps);
- electric power supply (for FMCRD motors);
- interconnecting piping;
- flow and pressure and isolation valves; and
- instrumentation and electrical controls.

Those components of the CRD system forming part of the primary pressure boundary are designed according to the ASME B&PV Code, Class 1 requirements.

The quality group classification of the components of the CRD system is outlined in Table 3.2-1 and they are designed to the codes and standards, per Table 3.2-3, in accordance with their individual quality groups.

Pertinent aspects of the design and qualification of the CRD system components are discussed in the following locations: transients in Subsection 3.9.1.1, faulted conditions in Subsection 3.9.1.4, and seismic testing in Subsection 3.9.2.2.

3.9.4.3 Design Loads and Stress Limits

Allowable Deformations

The ASME B&PV Code, Section III components of the CRD system have been evaluated analytically and the design loading conditions and stress criteria are as given in Tables 3.9-1 and 3.9-2, and the calculated stresses meet the ASME B&PV Code allowable stresses. For the non-ASME B&PV Code components, the ASME B&PV Code, Section III requirements are used as guidelines and experimental testing is used to determine the CRD performance under all possible conditions as described in Subsection 3.9.4.4.

3.9.4.4 Control Rod Drive Performance Assurance Program

The following CRD tests are described within Section 4.6.3:

- factory quality control tests;

- functional tests;
- operational tests;
- acceptance tests; and
- surveillance tests.

3.9.5 Reactor Pressure Vessel Internals

This subsection addresses the RPV internals as discussed in SRP 3.9.5. The RPV internals consist of all the structural and mechanical elements inside the reactor vessel. Safety-related structures and components are constructed and tested to quality standards commensurate with the importance of the safety-related functions to be performed, and designed with appropriate margins to withstand effects of AOOs, normal operation, natural phenomena such as earthquakes, postulated accidents including LOCA, and from events and conditions outside the nuclear power unit as discussed in GDC 1, 2, 4 and 10 and 10 CFR 50.55a.

The plant meets the requirements of the following regulations:

(1) GDC 1 and 10 CFR 50.55a, as they relate to reactor internals; the reactor internals are designed to quality standards commensurate with the importance of the safety-related functions to be performed.

(2) GDC 2, as it relates to reactor internals; the reactor internals are designed to withstand the effects of earthquakes without loss of capability to perform their safety-related functions.

(3) GDC 4, as it relates to reactor internals; reactor internals are designed to accommodate the effects of and to be compatible with the environmental conditions associated with normal operations, maintenance, testing, and postulated LOCA. Dynamic effects associated with postulated pipe ruptures are excluded from the design basis when analyses demonstrate that the probability of fluid system piping rupture is extremely low under conditions consistent with the design basis for the piping.

(4) GDC 10, as it relates to reactor internals; reactor internals are designed with appropriate margin to assure that specified acceptable fuel design limits are not exceeded during any condition of normal operation, including the effects of AOOs.

This subsection identifies and discusses the structural and functional integrity of the major RPV internals, including core support structures.

The core support structures and reactor vessel internals (exclusive of fuel, control rods, and in-core nuclear instrumentation) are as follows:

- Core Support Structures
  - shroud;
  - shroud support;
  - core plate (and core plate hardware);
  - top guide (and top guide hardware);
  - fuel supports (orificed fuel supports and peripheral fuel supports);

- CRGTs; and
- non-pressure boundary portion of CRDHs.

- Internal Structures (Components marked with an * are nonsafety-related.)
  - chimney* and partitions*;
  - chimney head* and steam separator assembly*;
  - steam dryer assembly*;
  - feedwater spargers*;
  - SLC header and spargers and piping;
  - RPV vent assembly*;
  - in-core guide tubes and stabilizers;
  - surveillance sample holders*; and
  - non-pressure boundary portion of in-core housings.

A general assembly drawing of the important reactor components is shown in Figure 3.9-7.

The floodable inner volume of the RPV can be seen in Figure 3.9-2. It is the volume up to the level of the GDCS equalizing nozzles.

The design arrangement of the reactor internals, such as the shroud, chimney, steam separators and guide tubes, is such that one end is unrestricted and thus free to expand.

3.9.5.1 Core Support Structures

The core support structures consist of those items listed in Subsection 3.9.5 and are safety-related as defined within Section 3.2. These structures form partitions within the reactor vessel to sustain pressure differentials across the partitions, direct the flow of the coolant water, and locate and support the fuel assemblies. Figure 3.9-3 shows the reactor vessel internal flow paths.

Shroud

The shroud and chimney make up a stainless steel cylindrical assembly that provides a partition to separate the upward flow of coolant through the core from the downward recirculation flow. This partition separates the core region from the downcomer annulus. The volume enclosed by this assembly is characterized by three regions. The upper region or chimney surrounds the core discharge plenum, which is bounded by the chimney head on top and the top guide below. The central region of the shroud surrounds the active fuel. This section is bounded at the top by the top guide and at the bottom by the core plate. The lower region, surrounding part of the lower plenum, is welded to the support legs. The shroud provides the horizontal support for the core by supporting the core plate and top guide. A conceptual design of the connection between the shroud, chimney, and top guide is shown in Figure 3.9-8.

Shroud Support

The RPV shroud support is designed to support the shroud and the components connected to the shroud. The RPV shroud support is a ring supporting the core plate and series of vertical support

legs supporting the ring. The support legs are welded to the vessel bottom head and the bottom of the support ring.

Core Plate

The core plate consists of a circular stainless steel plate with round openings. The core plate provides lateral support and guidance for the CRGTs, in-core flux monitor guide tubes, peripheral fuel supports, and startup neutron sources. The last two items are also supported vertically by the core plate. The core plate is bolted between the support ring and shroud. A conceptual design of the connection between the core plate, support ring and shroud is shown in Figure 3.9-9.

Top Guide

The top guide consists of a circular plate with square openings for fuel. Each opening provides lateral support and guidance for four fuel assemblies or, in the case of peripheral fuel, less than four fuel assemblies. Holes are provided in the bottom of the support intersections to anchor the in-core flux monitors and startup neutron sources. The top guide is mechanically attached to the top of the shroud and provides a flat surface for the chimney flange. The chimney is bolted to the top surface of the top guide as shown in Figure 3.9-8.

Fuel Supports

The Fuel supports (Figure 3.9-4) are of two basic types: peripheral supports and orificed fuel supports. The peripheral fuel supports are located at the outer edge of the active core and are not adjacent to control rods. Each peripheral fuel support supports one fuel assembly and contains an orifice designed to assure proper coolant flow to the peripheral fuel assembly. Each orificed fuel support holds four fuel assemblies vertically upward and horizontally and has four orifices to provide proper coolant flow distribution to each rod-controlled fuel assembly. The orificed fuel supports rest on the top a CRGT. The control rods pass through cruciform openings in the center of the orificed fuel support. This locates the four fuel assemblies surrounding a control rod. A control rod and the four adjacent fuel assemblies represent a core cell.

CRGTs

The CRGTs located inside the vessel extend from the top of the CRDHs up through holes in the core plate. Each guide tube is designed as the guide for the lower end of a control rod and as the support for an orificed fuel support. This locates the four fuel assemblies surrounding the control rod. The bottom of the guide tube is supported by the CRDH, which, in turn, transmits the weight of the guide tube, fuel support, and fuel assemblies to the reactor vessel bottom head. The CRGTs also include coolant flow holes near the top that are aligned with the coolant flow holes in the orificed fuel supports.

3.9.5.2 Internal Structures

The internal structures consist of those items listed in Subsection 3.9.5, and are safety-related or nonsafety-related as noted. These components direct and control coolant flow through the core or support safety-related and nonsafety-related functions.

Chimney and Partitions

These components are nonsafety-related internal components. The chimney is a long cylinder mounted to the top guide that supports the steam separator assembly. The chimney provides the driving head necessary to sustain the natural circulation flow. The chimney forms the annulus separating the subcooled recirculation flow returning downward from the steam separators and feedwater from the upward steam-water mixture flow exiting the core. The chimney cylinder is flanged at the bottom and top for attachment to the top guide and the chimney head, respectively. Inside the chimney are partitions that separate groups of 16 fuel assemblies. These partitions act to channel the mixed steam and water flow exiting the core into smaller chimney sections, limiting cross flow and flow instabilities, which could result from a much larger diameter open chimney. The partitions do not extend to the top of the chimney, thereby forming a plenum or mixing chamber for the steam/water mixture prior to entering the steam separators.

Chimney Head and Steam Separator Assembly

The chimney head and standpipes/steam separators are nonsafety-related internal components. The chimney head and steam separators assembly includes the upper flanges and bolts, and forms the top of the core discharge mixture plenum. The discharge plenum provides a mixing chamber for the steam/water mixture before it enters the steam separators. Individual stainless steel axial flow steam separators are supported on and attached to the top of standpipes that are welded into the chimney head. The steam separators have no moving parts. In each separator, the steam/water mixture rising through the standpipe passes through vanes that impart a spin and establish a vortex separating the water from the steam. The separated water flows from the lower portion of the steam separator into the downcomer annulus. The separator assembly is removable from the RPV on a routine basis.

Steam Dryer Assembly

The steam dryer assembly is a nonsafety-related component. The steam dryer removes moisture from the wet steam leaving the steam separators. The extracted moisture flows down the dryer vanes to the collecting troughs, then flows through drain ducts into the downcomer annulus.

The steam dryer assembly consists of multiple banks of dryer units mounted on a common structure, which is removable from the RPV as an integral unit. The dryer assembly includes the dryer banks, dryer supply and discharge ducting, drain collecting trough, drain duct, and a skirt that forms a water seal extending below the separator reference zero elevation. Upward and radial movement of the dryer assembly under the action of blowdown and seismic loads are limited by reactor vessel internal stops, which are arranged to permit differential expansion growth of the dryer assembly with respect to the RPV.

During normal refueling outages, the ESBWR steam dryer is supported from the floor of the equipment pool by the lower support ring that is located at the bottom edge of the skirt. The steam dryer is installed and removed from the RPV by the reactor building overhead crane. A steam separator and steam dryer lifting device, which attaches to four steam dryer lifting rod eyes, is used for lifting the steam dryer. Guide rods in the RPV are used to aid steam dryer installation and removal. Upper and lower guides on the steam dryer assembly are used to interface with the guide rods.

Feedwater Spargers

These are nonsafety-related components. Each of two feedwater lines is connected to spargers through three RPV nozzles. The feedwater spargers deliver makeup water to the reactor during plant start up, power generation and plant shutdown modes of operation. The RWCU/SDC system and CRD system, upon low water level, also utilize the feedwater spargers.

The feedwater spargers are stainless steel headers located in the mixing plenum above the downcomer annulus. A separate sparger in two halves is fitted to each feedwater nozzle by a tee and is shaped to conform to the curve of the vessel wall. The sparger tee inlet is connected to the thermal sleeve arrangement. Sparger end brackets are pinned to vessel brackets to support the spargers. Feedwater flow enters the center of the spargers and is discharged radially inward to mix the cooler feedwater with the downcomer flow from the steam separators and steam dryer. The feedwater also serves to condense steam in the region above the downcomer annulus and to subcool the water flowing down the annulus region.

SLC Header and Sparger and Piping

These are safety-related components. Each of two SLC nozzles feeds vertical piping extending down from the SLC nozzles to a header. Each header feeds two distribution lines extending down from the header to about the bottom of the fuel, and four injection lines with nozzles penetrating the shroud at four different levels (elevations). The injection lines enable the sodium pentaborate solution to be injected around the periphery of the core.

RPV Vent Assembly

This is designed as a nonsafety-related component. Only the piping external to the vessel is RCPB, and the vent function is a nonsafety-related operation.

The head vent assembly passes steam and noncondensable gases from the reactor head to the steamlines during startup and operation. During shutdown and filling for hydrostatic testing, steam and noncondensable gases may be vented to the drywell equipment sump while the connection to the steamline is blocked. When draining the vessel during shutdown, air enters the vessel through the vent.

In-Core Guide Tubes and Stabilizers

These are safety-related components. The guide tubes protect the in-core instrumentation from the flow of water in the bottom head plenum and provide a means of positioning fixed detectors in the core. The in-core flux monitor guide tubes extend from the top of the in-core flux monitor housing to the top of the core plate. The power range detectors for the power range monitoring units and the startup range neutron monitor detectors are inserted through the guide tubes. A conceptual design of the in-core guide tube and in-core monitor connection to the core plate is show in Figure 3.9-12.

A latticework of clamps, tie bars, and spacers give lateral support and rigidity to the guide tubes. A conceptual design of the In-core lateral supports is shown in Figures 3.9-10 and 3.9-11.

Surveillance Sample Holders

These are nonsafety-related components. The surveillance sample holders are welded baskets containing impact and tensile specimen capsules. The baskets hang from the brackets that are attached to the inside of the reactor vessel wall and extend to mid-height of the active core. The

radial positions are chosen to expose the specimens to the same environment and maximum neutron fluxes experienced by the reactor vessel itself.

3.9.5.3 Loading Conditions

Events to be Evaluated

Examination of the spectrum of conditions for which the safety-related design bases (Subsection 3.9.5.4) must be satisfied by core support structures and safety-related internal components reveals three significant load events:

- RPV Line Break Accident — a break in any one line between the reactor vessel nozzle and the isolation valve (the accident results in significant pressure differentials across some of the structures within the reactor and RBV caused by suppression pool dynamics).
- Earthquake — subjects the core support structures and reactor internals to significant forces as a result of ground motion and consequent RBV.
- SRV or DPV Discharge — RBV caused by suppression pool dynamics and structural feedback.

The faulted conditions for the RPV internals are discussed in Subsection 3.9.1.4. Loading combination and analysis for safety-related reactor internals including core support structures are discussed in Subsection 3.9.5.4.

Reactor Internal Pressure Differences

For reactor internal pressure differences, the events at normal, upset, emergency and faulted conditions are considered.

The TRACG computer code is used to analyze the transient conditions within the reactor vessel following AOOs, infrequent events and accidents (e.g., LOCA). The analytical model of the vessel consists of axial and radial nodes, which are connected to the necessary adjoining nodes by flow paths having the required resistance and inertial characteristics. The program solves the energy and mass conservation equations for each node to give the depressurization rates and pressures in the various regions of the reactor.

In order to determine the maximum pressure differences across the reactor internals, a two sigma statistical uncertainty study is performed to determine the upper bound pressure difference adders that are applied to the nominal pressure differences.

Table 3.9-3 summarizes the maximum pressure differentials that result from the limiting events among the AOOs, infrequent events and accidents (e.g., LOCA).

Seismic and Other RBV Events

The loads due to earthquake and other RBV acting on the structure within the reactor vessel are based on a dynamic analysis methods described in Section 3.7.

3.9.5.4 Design Bases

Safety-Related Design Bases

The reactor internals, including core support structures, meet the following safety-related design bases:

- The reactor vessel nozzles and internals are so arranged as to provide a floodable volume in which the core can be adequately cooled in the event of a breach in the nuclear system process barrier external to the reactor vessel.
- Deformation of internals is limited to assure that the control rods and core standby cooling systems can perform their safety-related functions.
- Mechanical design of applicable structures assures that the above safety-related design bases are satisfied so that the safe shutdown of the plant and removal of decay heat are not impaired.

Power Generation Design Bases

The reactor internals, including core support structures, are designed to the following power generation design bases:

- The internals provide the proper coolant distribution during all anticipated normal operating conditions to full power operation of the core without fuel damage.
- The internals are arranged to facilitate refueling operations.
- The internals are designed to facilitate inspection.

Design Loading Categories

The basis for determining faulted dynamic event loads on the reactor internals is shown in Section 3.7. Table 3.9-2 shows the load combinations used in the analysis.

Core support structures and safety class internals stress limits are consistent with the ASME B&PV Code, Subsection NG. For these components, Level A, B, C and D service limits are applied to the normal, upset, emergency, and faulted loading conditions, respectively, as defined in the design specification. Stress intensity and other design limits are discussed in the following paragraphs.

Stress and Fatigue Limits for Core Support Structures

The design and construction of the core support structures are in accordance with the ASME B&PV Code, Subsection NG.

Stress, Deformation, and Fatigue Limits for Safety Class and Other Reactor Internals (Except Core Support Structures)

For safety-related reactor internals, the stress deformation and fatigue criteria listed in Tables 3.9-4 through 3.9-7 are based on the criteria established in applicable codes and standards for similar equipment, by manufacturers' standards, or by empirical methods based on field experience and testing. For the quantity minimum safety factor (SF_{min}) appearing in those tables, the following values are used:

Service Level	Service Condition	SF_{min}
A	Normal	2.25
B	Upset	2.25
C	Emergency	1.5

Service Level	Service Condition	SF_{min}
D	Faulted	1.125

Components inside the RPV such as control rods, which must move during accident conditions, are examined to determine if adequate clearances exist during emergency and faulted conditions. The forcing functions applicable to the reactor internals are discussed in Subsection 3.9.2.

The design criteria, loading conditions, and analyses that provide the basis for the design of the safety class reactor internals other than the core support structures meet the guidelines of paragraph NG-3000 of the ASME B&PV Code and are constructed so as not to adversely affect the integrity of the core support structures (NG-1122).

The reactor internal structures classified as nonsafety-related in Section 3.9.5 are not ASME B&PV Code components, but their design complies with the requirements of ASME B&PV Code, Subsection NG-3000 except for the weld quality and fatigue factors for secondary structural non-load bearing welds. Primary structural load bearing welds use quality and fatigue factors as given in NG-3000. The steam dryer assembly weld quality and fatigue factor methodology is discussed in Reference 3.9-7.

3.9.6 Inservice Testing of Pumps and Valves

Inservice testing of certain ASME B&PV Code, Section III, Class 1, 2, and 3 pumps and valves is performed in accordance with the ASME OM Code as required by 10 CFR 50.55a(f), including limitations and modifications set forth in 10 CFR 50.55a. The Inservice Testing (IST) Program does not include any non-ASME B&PV Code Class valves. The design of the nuclear power plant structures, systems, and components will provide access for the performance of inservice testing and in-service inspection as required by the applicable ASME B&PV Code.

Inservice testing of pumps and valves is in conformance with the relevant requirements of 10 CFR Part 50, Appendix A, GDC 1, 37, 40, 43, 46, 54, and 10 CFR 50.55a(f). The relevant requirements are as follows:

(1) GDC 1, as it relates to testing safety-related components to quality standards commensurate with the importance of the safety-related functions to be performed.

(2) GDC 37, as it relates to periodic functional testing of the emergency core cooling system to ensure the leak tight integrity and performance of its active components.

(3) GDC 40, as it relates to periodic functional testing of the containment heat removal system to ensure the leak tight integrity and performance of its active components.

(4) GDC 43, as it relates to periodic functional testing of the containment atmospheric cleanup systems to ensure the leak tight integrity and the performance of the active components, such as pumps and valves.

(5) GDC 46, as it relates to periodic functional testing of the cooling water system to ensure the leak tight integrity and performance of the active components.

(6) GDC 54, as it relates to piping systems penetrating containment being designed with the capability to test periodically the operability of the isolation and determine valve leakage acceptability.

(7) Subsection 50.55a(f) of 10 CFR, as it relates to including pumps and valves whose function is required for safe operation in the IST Program to verify operational readiness by periodic testing.

The IST Program includes periodic tests and inspections that demonstrate the operational readiness of safety-related components and their capability to perform their safety-related functions. The IST Program is based on the requirements of the ASME OM Code, Subsections ISTA, ISTB, ISTC and (mandatory) Appendix I. The specific ASME OM Code requirements for functional testing of pumps are found in the ASME OM Code, Subsection ISTB, requirements for inservice testing of valves are found in the ASME OM Code, Subsection ISTC, and requirements for inservice testing of pressure relief devices are found in ASME OM Code, (mandatory) Appendix I. General requirements for inservice testing are found in ASME OM Code, Subsection ISTA.

The requirements for system pressure testing are defined in ASME Code Section XI, Subsection IWA-5000; this testing, which verifies pressure boundary integrity, is included within the scope of the in-service inspection program described in Subsection 5.2.4 and Section 6.6.

The requirements for preservice and inservice examination and testing of dynamic restraints are defined in the ASME OM Code, Subsection ISTD. This program is described in Subsection 3.9.3.7.1.

Refer to COL item 3.9.9-3-A for COL information requirements.

3.9.6.1 InService Testing Valves

Certain ASME B&PV Code Class 1, 2, and 3 valves and pressure relief devices are subject to inservice testing in accordance with the ASME OM Code, Subsection ISTC and/or Appendix I, including the general requirements in ISTA. Inservice testing of valves assesses operational readiness including actuating and position-indicating systems. The valves that are subject to inservice testing include those valves that perform a specific function in shutting down the reactor to a safe shutdown condition, in maintaining a safe shutdown condition, or in mitigating the consequences of an accident. In addition, pressure relief devices used for protecting systems or portions of systems that perform a function in shutting down the reactor to a safe shutdown condition, in maintaining a safe shutdown condition, or in mitigating the consequences of an accident, are subject to inservice testing.

The IST Program does not require testing of nonsafety-related valves. Any nonsafety-related valves included in the IST Program as part of regulatory treatment of nonsafety-related systems (RTNSS, see Appendix 19A) are considered augmented components and tested commensurate with their functions.

Valves subject to inservice testing in accordance with the ASME OM Code are indicated in Table 3.9-8.

Active valve dynamic qualification and pre-installation testing requirements to assure valve operability are addressed in Subsection 3.9.3.5. Periodic operability (non-ASME OM Code) testing for power-operated valves is described in Subsection 3.9.6.8.

3.9.6.1.1 Valve Exemptions

ASME OM Code ISTC-1200 provides exemptions from the IST Program for certain ASME B&PV Code Class 1, 2, and 3 valves provided that they are not required to perform a specific function in shutting down the reactor to a safe shutdown condition, in maintaining a safe shutdown condition, or in mitigating the consequences of an accident. The following valves are exempt from the ASME OM Code, Subsection ISTC:

(1) valves used only for operating convenience such as vent, test, drain and instrument valves

(2) valves used only for system control, such as pressure regulating valves

(3) valves used only for system or component maintenance

(4) skid-mounted valves provided they are justified and adequately tested

(5) valves used for external control and protection systems responsible for sensing plant conditions and providing signals for valve operation (e.g., solenoid valves on air operated valves).

3.9.6.1.2 Valve Categories

Non-exempt ASME B&PV Code Class 1, 2 and 3 valves are categorized in accordance with the ASME OM Code Subsection ISTC-1300 as follows:

(1) Category A – valves for which seat leakage is limited to a specific maximum amount in the closed position for fulfillment of their required function(s).

(2) Category B – valves for which seat leakage in the closed position is inconsequential for fulfillment of the required function(s).

(3) Category C – valves that are self-actuating in response to some system characteristic, such as pressure (relief valve) or flow direction (check valve) for fulfillment of the required function(s).

(4) Category D – valves that are actuated by an energy source capable of only one operation, such as rupture disks and explosively actuated valves.

When more than one distinguishing category characteristic is applicable, all requirements of each of the individual categories are applicable, although duplication or repetition of common testing requirements is not necessary.

3.9.6.1.3 Valve Functions

Valves in the IST Program are classified as either active or passive in accordance with the ASME OM Code ISTA-2000 as follows:

(1) Active Valve – valves that are required to change obturator position to accomplish a specific function in shutting down a reactor to the safe shutdown condition, maintaining the safe shutdown condition, or mitigating the consequences of an accident.

(2) Passive Valve – valves that maintain obturator position and are not required to change obturator position to accomplish the required function(s) in shutting down a reactor to the safe shutdown condition, maintaining the safe shutdown condition, or mitigating the consequences of an accident.

The IST Program identifies the safety-related functions for safety-related valves. The following are typical safety-related functions that are identified in the IST Program.

- Maintain closed (passive function)
- Maintain open (passive function)
- Transfer closed (active function)
- Transfer open (active function)

3.9.6.1.4 Valve Testing

Based on the valve category, active/passive function(s), and safety-related function(s) identified for each valve, the inservice tests to confirm the capability of the valve to perform these functions are identified in Table 3.9-8. ASME OM Code Table ISTC-3500-1, Inservice Test Requirements, specifies the required tests.

Table ISTC-3500-1 of the ASME OM Code requires the following four basic valve tests:

- exercise tests
- seat leakage tests
- remote position indicator tests
- special tests (i.e., fail-safe tests, explosive valve tests, rupture disc tests)

(1) Valve Exercise Tests

Active Category A valves, Category B valves, and Category C check valves are exercised periodically, except for self-actuated safety and relief valves. The ASME OM Code specifies a quarterly valve exercise frequency for all valves except power-operated safety and relief valves, which are required to be tested once per fuel cycle, and manual valves, as discussed in Subsection 3.9.6.1.5(2). Where it is not practicable to exercise a valve during normal power operation, the valve exercise test is deferred to either cold shutdown or refueling outages. Valve exercise tests and frequencies are identified in Table 3.9-8. In some cases, quarterly stroke testing is deferred to refueling outages or cold shutdown, as indicated in Table 3.9-8 Note g. The bases for deferral are consistent with NUREG-1482, Revision 1, considering the ESBWR is a new plant design. Where practical, the ESBWR is designed to accommodate quarterly stroke testing.

During valve exercise tests, the necessary valve obturator movement is determined while observing an appropriate direct indicator, such as indicating lights that signal the required changes of obturator position, or by observing other evidence or positive means, such as changes in system pressure, flow, level, or temperature that reflects change of obturator position.

Check valve exercise tests use direct observation or other positive means (ASME OM Code, ISTC-5221(a)) for verification of valve obturator position.

(2) Valve Leakage Tests

Active and passive Category A containment isolation valves are tested to verify seat leakage is within limits in accordance with 10 CFR 50 Appendix J. Frequencies of

containment isolation valve seat leakage tests are in accordance with the Appendix J requirements. All containment isolation valves and seat leakage tests are identified in Table 3.9-8.

Other Category A valves are required to be seat leakage tested at least once every two years as specified by the ASME OM Code ISTC-3630.

(3) Remote Position Indicator Tests

Active and passive valves that are included in the IST Program and that are equipped with remote position indication require periodic verification of the remote position indication function in accordance with ASME OM Code ISTC-3700. Valves that require remote position indication testing are observed locally during valve exercising to verify proper operation of the position indication. The frequency for this position indication test is once every two years. Where local observation is not practicable, other methods are used for verification of valve position indicator operation.

Valves with remote position indicators are identified in Table 3.9-8.

(4) Special Tests

- Valves with fail-safe actuators are tested by observing the operation of the actuator upon loss of valve actuating power (electrical power and/or pneumatic supply) in accordance with ASME OM Code ISTC-3560. These tests are performed in conjunction with the valve exercise test. Fail-safe test requirements are identified in Table 3.9-8.

- Category D explosively actuated valves are subject to periodic test firing of the explosive actuator charges. In accordance with ASME OM Code ISTC-5260, at least 20 percent of the charges installed in the plant in explosively actuated valves are fired and replaced at least once every two years. If a charge fails to fire, all charges within the same batch number are removed, discarded, and replaced with charges from a different batch. The firing of the explosive charge may be performed inside the valve or outside of the valve in a test fixture.

  The maintenance and review of the service life for charges for explosively actuated valves follows the requirements in the ASME OM Code ISTC-5260. Replacement charges are from batches from which a sample charge has been tested satisfactorily, and with a service life such that the requirements of ASME OM Code ISTC–5260(b) are met.

  Category D explosively actuated valves are identified in Table 3.9-8.

- Category D rupture disks are replaced on a 5 year frequency unless historical data indicates a requirement for more frequent replacement, in accordance with Mandatory Appendix I of the ASME OM Code.

  Category D rupture disks are identified in Table 3.9-8.

3.9.6.1.5 Specific Valve Test Requirements

(1) Power-Operated Valve Tests

Power-operated valves are tested in accordance with the ASME OM Code, Subsection ISTC. Specific testing activities for each valve are listed in Table 3.9-8. For active power-operated valves, stroke times will be measured during the exercise tests. Any abnormalities or erratic actions will be documented and evaluated. Test failures (e.g., failure to fully stroke or high stroke time measurements) are addressed per the ASME OM Code by repair, replacement or analysis.

The IST Program for power-operated valves also considers the guidance in the NRC Regulatory Issue Summary 2000-03, which incorporates lessons learned from motor-operated valve analyses and tests in response to Generic Letter 89-10. The COL Applicant is responsible for describing, in the IST Program description (see COL Item 3.9.9-3-A), how the IST Program addresses these lessons learned.

(2) Manual Valve Exercise Tests

Active Category A and B manual valves are exercised once every two years in accordance with 10 CFR 50.55a(b)(3)(vi).

(3) Check Valve Exercise Tests

Category C check valves are exercised to both the open and closed positions regardless of safety function position in accordance with ASME OM Code ISTC-3522(a) using the methods of ISTC-5221. Check valves that have seat leakage requirements are leak tested in accordance with ASME OM Code ISTC-3600.

During the exercise test, valve obturator position is verified by direct observation (position indicating lights) or by other positive means (i.e., changes in system pressure, temperature, flow rate, level, seat leakage or nonintrusive testing results).

Check valves are exercised open with flow to either the full open position or to the position required to perform its intended open safety function. Check valve closure tests are performed by verifying that the obturator travels to the seat upon cessation of flow or reverse flow. Check valves with only an open safety function may be verified closed by other direct observations such as pressure, level, temperature, or seat leakage. This methodology meets the exercise requirements of ASME OM Code ISTC-5221.

Check valve exercise tests and frequencies are included in Table 3.9-8.

(4) Vacuum Breaker Tests

Vacuum breakers must meet the test requirements for both a Category C check valve (ASME OM Code ISTC-5220) and for a pressure relief device (Appendix I). Vacuum breaker tests and frequencies are included in Table 3.9-8.

(5) Pressure Relief Valve Tests

Pressure relief devices that protect systems or portions of system that are required to perform a function in shutting down the reactor to the safe shutdown condition, in maintaining the safe shutdown condition, or in mitigating the consequences of an accident, are subject to periodic inservice testing. The inservice tests for these valves are identified in ASME OM Code (mandatory) Appendix I.

The periodic inservice testing includes visual inspection, seat tightness determination, set pressure determination, and operational determination of balancing devices, alarms, and position indication as appropriate. The frequency for this inservice test is every five years for ASME Class 1, and every 10 years for ASME Classes 2 and 3 devices. Pressure relief valves that require inservice testing are identified in Table 3.9-8.

3.9.6.2 Inservice Testing of Pumps

The ESBWR design does not require the use of pumps to mitigate the consequences of any DBA, or to achieve or maintain the safe shutdown condition. Therefore, there are no pumps required to be included in the IST Program. Table 3.9-8 does not list any pumps in the IST Program.

3.9.6.3 Preservice Testing of Valves

Category A, B, C (check valves), and D valves that are subject to periodic inservice testing are preservice tested in accordance with ASME OM Code Subsection ISTC-3100.

Category C pressure relief valves are preservice tested in accordance with ASME OM Code, Mandatory Appendix I.

3.9.6.4 Deferred Testing Justifications

In cases where it is not practicable to exercise category A, B or C (check) valves during normal power operations (quarterly), the valve is exercised during cold shutdown or refueling as permitted by ASME OM Code Subsections ISTC-3521 and ISTC-3522.

Valve exercise tests and associated frequencies are identified in Table 3.9-8. Justifications for deferred testing are detailed in Table 3.9-8.

3.9.6.5 Valve Replacement, Repair and Maintenance

Testing in accordance with ASME OM, ISTC-3310 and ISTC-5000 is performed after a valve is replaced, repaired, or has undergone maintenance that could affect the valve's performance.

3.9.6.6 10 CFR 50.55a Relief Requests and Code Cases

Inservice testing of ASME B&PV Code Class 1, 2, and 3 pumps and valves is performed in accordance with the ASME OM Code except where specific relief has been granted by the NRC in accordance with 10 CFR 50.55a(f). Relief from the testing requirements of ASME OM Code is requested when compliance with requirements of the ASME OM Code is not practical. In such cases, specific information is provided which identifies the impractical code requirement, justification for the relief request, and the testing method to be used as an alternative. Demonstration of the impracticality of the testing required by the ASME OM Code, and justification for alternative testing proposed are provided.

The IST Program for valves does not invoke the use of any ASME Code Cases for inservice testing.

3.9.6.7 Inservice Testing Program Implementation

ASME OM Code inservice test intervals are as required by ISTA-3120; the initial 120-month test interval begins following the start of commercial service. The duration of each 120-month test interval may be modified by as much as one year as allowed by the ASME OM Code, provided these adjustments do not cause successive intervals to be altered by more than one year from the original pattern of intervals.

The COL Applicant will provide milestones for implementation of the Preservice and Inservice Testing Programs and other valve-related programs. See COL item 3.9.9-3-A.

3.9.6.8 Non-Code Testing of Power-Operated Valves

Although the design basis capability of active, safety-related power-operated valves is verified as part of the design and qualification process, power-operated valves that perform an active safety function are tested again after installation in the plant, as required, to ensure valve setup is acceptable to perform their required functions, consistent with valve qualification. These tests, which are typically performed under static (no flow or pressure) conditions, also document the "baseline" performance of the valves to support future maintenance and trending programs performed by the plant licensee. During the testing, critical parameters needed to ensure proper valve setup are measured. Depending on the valve and actuator type, these parameters may include seat load, running torque or thrust, valve travel, actuator spring rate, bench set and regulator supply pressure. Uncertainties associated with performance of these tests and use of the test results (including those associated with measurement equipment and potential degradation mechanisms) are considered appropriately. Uncertainties may be considered in the specification of acceptable valve setup parameters or in the interpretation of the test results (or a combination of both). Uncertainties affecting both valve function and structural limits are considered.

Additional valve testing may be performed by the plant licensee, for example, as part of the plant's air-operated valve program in response to Regulatory Issue Summary 2000-003 or as part of the plant's preventive maintenance program.

3.9.7 Risk-Informed Inservice Testing

Risk-informed inservice testing initiatives, if any, are included in the implementation plans for the IST Program, which is an operational program addressed in Section 13.4.

3.9.8 Risk-Informed Inservice Inspection of Piping

Risk-informed inservice inspection of piping initiatives, if any, are included in the implementation plans for the inservice inspection of piping program, which is an operational program addressed in Section 13.4.

3.9.9 COL Information

3.9.9-1-A Reactor Internals Vibration Analysis, Measurement and Inspection Program

The COL Applicant will classify its reactor per the guidance in RG 1.20 and provide a milestone for submitting a description of the inspection and measurement programs to be performed

(including measurement locations and analysis predictions) and the results of the vibration analysis, measurement and test program (Subsection 3.9.2.4).

3.9.9-2-A ASME Class 2 or 3 or Quality Group D Components with 60-Year Design Life

The COL Applicant will provide a milestone for completing the required equipment stress reports, per ASME B&PV Code, Subsection NB, for equipment segments that are subject to loadings that could result in thermal or dynamic fatigue and for updating the FSAR, as necessary, to address the results of the analysis (Subsection 3.9.3.1).

3.9.9-3-A Inservice Testing Programs

The COL Applicant shall provide a full description of the IST Program and a milestone for full program implementation as identified in Subsection 3.9.6.1.

3.9.9-4-A A Snubber Inspection and Test Program

The COL Applicant shall provide a full description of the snubber preservice and inservice inspection and testing programs, and a milestone for program implementation, including development of a data table identified in Subsection 3.9.3.7.1(3)f (Subsection 3.9.3.7.1(3)e).

3.9.10 References

3.9-1 General Electric Company, "BWR Fuel Channel Mechanical Design and Deflection," NEDE-21354-P, September 1976 (GE proprietary) and NEDO-21354, September 1976 (Non-proprietary).

3.9-2 General Electric Company, "BWR Fuel Assembly Evaluation of Combined Safe Shutdown (SSE) and Loss-of-Coolant Accident (LOCA) Loadings (Amendment No. 3)," NEDE-21175-3-P-A, October 1984 (GE proprietary) and NEDO-21175-3-A, October 1984 (Non-proprietary).

3.9-3 General Electric Company, "General Electric Environmental Qualification Program," NEDE-24326-1-P, Proprietary Document, January 1983.

3.9-4 M.A. Miner, "Cumulative Damage in Fatigue," Journal of Applied Mechanics, Vol. 12, ASME, Vol. 67, pages A159-A164, September 1945.

3.9-5 American Society of Mechanical Engineers Code for Operation and Maintenance of Nuclear Power Plants, 2001 Edition with 2003 Addenda.

3.9-6 (Deleted)

3.9-7 GE Hitachi Nuclear Energy, "ESBWR Steam Dryer Structural Evaluation," NEDE-33313P, Revision 1, Class III (Proprietary), July 2009, and NEDO-33313, Revision 1, Class I (Non-Proprietary), July 2009.

3.9-8 American Society of Mechanical Engineers OM-S/G-1990, Standards and Guides for Operation and Maintenance of Nuclear Power Plants.

Table 3.9-1

Plant Events

	ASME B&PV Code Service Limit[8]	No. of Cycles
A. Plant Operating Events[1], [9]		
1. Boltup[1]	A	45
2. a. Hydrostatic Test (two test cycles for each boltup cycle)	Testing	90
b. Hydrostatic Test (shop and field)	Testing	3
3. Startup (55.6°C/hr [100°F/hr] Heatup Rate)[2]	A	180
4. Turbine Roll and Increase to Rated Power	A	180
5. Daily and Weekly Reduction to 50% Power[1]	A	20,200
6. Control Rod Pattern Change[1]	A	300
7. Loss of Feedwater Heaters	B	60
8. Scram:		
a. Turbine Generator Trip, Feedwater On, and Other Scrams	B	60
b. Loss of Feedwater Flow, MSIV Closure	B	60
9. Reduction to 0% Power, Hot Standby, Shutdown (55.6°C/hr [100°F/hr] Cooldown Rate)[2]	A	172
10. Refueling Shutdown and Unbolt[1]	A	45
11. Scram:		
a. Reactor Overpressure with Delayed Scram (ATWS)	C	1[3]
b. Automatic Blowdown	C	1[3]
12. Improper Plant Startup	C	1[3]
B. Dynamic Loading Events[1], [6], [9]		
13. Safe Shutdown Earthquake (SSE) at Rated Power Operating Conditions	B[4]	20[5]
14. Safe Shutdown Earthquake (SSE) at Rated Power Operating Conditions	D[7]	1[3]
15. a. Safety Relief Valve (SRV) actuation (one) with depressurization (scram)	B	8
b. Depressurization Valve (DPV) actuation (one) with depressurization (scram)	C	1[3]

Table 3.9-1

Plant Events

	ASME B&PV Code Service Limit(8)	No. of Cycles
16. Loss-of-Coolant-Accident (LOCA): Worst of small break LOCA (SBL), intermediate break LOCA (IBL), or large break LOCA (LBL)	D(7)	1(3)

Notes:

(1) Some events apply to RPV only. The number of events/cycles applies to RPV as an example.

(2) Bulk average vessel coolant temperature change 55.6°C (100°F) in any one-hour period.

(3) The annual encounter probability of a single event is $< 10^{-2}$ for a Level C event and $< 10^{-4}$ for a Level D event. Refer to Subsection 3.9.3.1.

(4) The effects of displacement-limited, seismic anchor motions due to SSE are evaluated for safety-related ASME B&PV Code Class 1, 2, and 3 components and component supports. See Table 3.9-2 for stress limits to be used to evaluate the seismic anchor motion effects.

(5) Use 20 peak SSE cycles for evaluation of ASME Class 1 components and core support structures for Service Level B fatigue analysis. Alternatively, an equivalent number of fractional SSE cycles may be used in accordance with Subsection 3.7.3.2.

(6) Table 3.9-2 shows the evaluation basis combination of these dynamic loadings.

(7) ASME B&PV Code Appendix F or other appropriate requirements of the ASME B&PV Code are used to determine the Service Level D limits, as described in Subsection 3.9.1.4.

(8) These ASME B&PV Code Service Limits apply to ASME B&PV Code Class 1, 2 and 3 components, component supports and Class CS structures. Different limits apply to Class MC and CC containment vessels and components, as discussed in Section 3.8.

(9) Plant events listed are those expected to occur over the 60-year life of the plant.

**[*Table 3.9-2*

Load Combinations and Acceptance Criteria for Safety-Related, ASME B&PV Code Class 1, 2 and 3 Components, Component Supports, and Class CS Structures

Plant Event	*Service Loading Combination* (1), (2), (3)	*ASME Service Level* (4)
1. *Normal Operation*	*N*	*A*
2. *Plant/System Operating Transients (SOT)*	*(a) N + TSV*	*B*
	(b) N + SRV(5)	*B*
3. *Normal Operation + SSE*	*N + SSE*	*B*(11), (12)
4. *Infrequent Operating Transient, ATWS, DPV*	*(a) N*(6) *+ SRV*(5)	*C*(13)
	(b) N + DPV(7)	*C*(13)
5. *SBL*	*N + SRV*(8) *+ SBL*	*C*(13)
6. *SBL or IBL + SSE*	*N + SBL (or IBL) + SSE + SRV*(8)	*D*(13)
7. *LBL + SSE*	*N + LBL + SSE*	*D*(13)
8. *NLF*	*N + SRV*(5) *+ TSV*(10)	*D*(13)

Notes:

(1) See Legend on the following pages for definition of terms. Refer to Table 3.9-1 for plant events and cycles information.

The service loading combination also applies to Seismic Category I instrumentation and electrical equipment (refer to Section 3.10).

(2) For vessels, loads induced by the attached piping are included as identified in their design specification.

For piping systems, water (steam) hammer loads are included as identified in their design specification.

(3) The method of combination of the loads is in accordance with NUREG-0484, Revision 1.

(4) The service levels are as defined in appropriate subsection of ASME Section III, Division 1.

(5) The most limiting load combination case among SRV(1), SRV(2) and SRV (ALL). For MS and branch piping evaluation, additional loads associated with relief line clearing and blowdown into the suppression pool are included.

(6) The RCPB is evaluated using in the load combination the maximum pressure expected to occur during ATWS.

(7) This applies only to the MS and Isolation Condenser systems. The loads from this event are combined with loads associated with the pressure and temperature concurrent with the event.

(8) The most limiting load combination case among SRV(1), SRV(2) and SRV (ADS). See Note (5) for MS and branch piping.

(9) (Deleted)

(10) This applies only to the main steamlines and components mounted on it. The low probability that the TSV closure and SRV loads can exist at the same time results in this combination being considered under service level D.

(11) Applies only to fatigue evaluation of ASME B&PV Code Class 1 components and core support structures. See Dynamic Loading Event No. 13, Table 3.9-1, and Note 5 of Table 3.9-1 for number of cycles.

(12) For ASME B&PV Code Class 1, 2 and 3 piping the following changes and additions to ASME B&PV Code Section III NB-3600, NC-3600 and ND-3600 are necessary and are evaluated to meet the following stress limits:

a. ASME B&PV Code Class 1 Piping

$$S_{SAM} = C_2 \frac{D_0}{2I} M_c \leq 6.0 S_m \qquad \textit{Eq. (12a)}$$

Where: S_{SAM} *is the nominal value of seismic anchor motion stress*

M_c *is the combined moment range equal to the greater of (1) the resultant range of thermal and thermal anchor movements plus one-half the range of the SSE anchor motion, or (2) the resultant range of moment due to the full range of the SSE anchor motions alone.*

C_2, D_0 *and I are defined in ASME B&PV Code NB-3600.*

S_m *is the tabulated value of allowable stress at temperature per the ASME B&PV Code or its equivalent*

SSE inertia and seismic anchor motion loads are included in the calculation of ASME B&PV Code NB-3600 Equations (10) and (11).

b. For ASME B&PV Code Class 2 and 3 piping:

$$S_{SAM} = i \frac{M_c}{Z} \leq 3.0 S_h \quad (\leq 2.0 S_y) \qquad \textit{Eq. (12b)}$$

Where: S_{SAM} *and* M_c *are defined in (a) above.*

i and Z are defined in ASME B&PV Code Subsections NC/ND-3600

SSE inertia and seismic anchor motion loads are not included in the calculation of ASME B&PV Code Subsections NC/ND-3600 Equation (9), Service Levels A and B and Equations (10) and (11).

(13) ASME B&PV Code Class 1, 2 and 3 Piping systems, which are essential for safe shutdown under the postulated events are designed to meet the requirements of NUREG-1367. Piping system dynamic moments can be calculated using an elastic response spectrum or time history analysis.

Load Definition Legend for Table 3.9-2	
Normal (N)	*Normal and/or abnormal loads associated with the system operating conditions, including thermal loads, depending on acceptance criteria.*
SOT	*System Operational Transient (Subsection 3.9.3.1).*
IOT	*Infrequent Operational Transient (Subsection 3.9.3.1).*
ATWS	*Anticipated Transient Without Scram.*
TSV	*Turbine stop valve closure induced loads in the MS piping and components integral to or mounted thereon.*
NLF	*Non-LOCA Fault.*
SSE	*RBV loads induced by safe shutdown earthquake.*
SRV(1), SRV(2)	*RBV loads induced by safety relief valve (SRV) discharge of one or two adjacent valves, respectively.*
SRV (ALL)	*RBV loads induced by actuation of all safety relief valves, which activate within milliseconds of each other (e.g., turbine trip operational transient).*
SRV (ADS)	*RBV loads induced by the actuation of safety relief valves in Automatic Depressurization System operation, which actuate within milliseconds of each other during the postulated small or intermediate break LOCA, or SSE.*
DPV	*Depressurization Valve opening induced loads in the Isolation Condenser system piping and pipe-mounted equipment.*
LOCA	*The loss-of-coolant-accident associated with the postulated pipe failure of a high-energy reactor coolant line. The load effects are defined by LOCA1 through LOCA7. LOCA events are grouped in three categories, SBL, IBL or LBL, as defined here.*
LOCA1	*Pool swell drag/fallback loads on safety-related piping and components located between the main vent discharge outlet and the suppression pool water upper surface.*
LOCA2	*Pool swell impact loads acting on safety-related piping and components located above the suppression pool water upper surface.*
LOCA3	*(a) Oscillating pressure induced loads on submerged safety-related piping and components during main vent clearing (VLC), condensation oscillations (COND), or chugging (CHUG), or* *(b) Jet impingement (JI) load on safety-related piping and components as a result of a postulated IBL or LBL event. Piping and components are defined safety-related, if they are required for shutdown of the reactor or to mitigate consequences of the postulated pipe failure without off-site power (refer to introduction to Section 3.6).*
LOCA4	*RBV load from main vent clearing (VLC).*
LOCA5	*RBV loads from condensation oscillations (COND).*
LOCA6	*RBV loads from chugging (CHUG).*

Load Definition Legend for Table 3.9-2	
LOCA7	*Annulus pressurization (AP) loads due to a postulated line break in the annulus region between the RPV and shieldwall. Vessel depressurization loads on reactor internals (Subsection 3.9.2.4) and other loads due to reactor blowdown reaction and jet impingement and pipe whip restraint reaction from the broken pipe are included with the AP loads.*
SBL	*Loads induced by small break LOCA (Subsection 3.9.3.1); the loads are: LOCA3(a), LOCA4 and LOCA6.*
IBL	*Loads induced by intermediate break LOCA (Subsection 3.9.3.1); the loads are: LOCA3(a) or LOCA3(b), LOCA4, LOCA5 and LOCA6.*
LBL	*Loads induced by large break LOCA (Subsection 3.9.3.1); the loads are: LOCA1 through LOCA7.*]*

* Text sections that are bracketed and italicized with an asterisk following the brackets are designated as Tier 2*. Prior NRC approval is required to change.

Table 3.9-3

Pressure Differentials Across Reactor Vessel Internals

Reactor Component[2]	Maximum Pressure Differences[1,3] kPaD, (psi)
1. Core plate and guide tube	76.7 (11.1)
2. Support legs and support ring (beneath the core plate)	51.3 (7.44)
3. Chimney head (at marked elevation)	84.9 (12.3)
4. Upper shroud (just below top guide)	122.6 (17.8)
5. Core averaged power fuel bundle (bulge at bottom of bundle)	44.8 (6.50)
6. Core averaged power fuel bundle (collapse at bottom of top guide)	66.6 (9.66)
7. Maximum power fuel bundle (bulge at bottom of bundle)	71.1 (10.3)
8. Top guide	74.6 (10.8)
9. Steam Dryer	15.8 (2.3)
• Chimney head to water level, for points (a) to (b), irreversible pressure drop	71.2 (10.3)
• Chimney head to water level, from points (a) to (b), elevation pressure drop	50.0 (7.25)

Notes:

(1) At 100% rated core power, 100% rated steam flow, and 100% rated core flow with two sigma statistical calculations.

(2) Item numbers in this column correspond to the location (node) numbers identified in Figure 3.9-5.

(3) In application there is an additional 10% margin added to these values.

Table 3.9-4

Deformation Limit for Safety Class Reactor Internal Structures Only

Either One Of (Not Both)		General Limit
a.	$\frac{\text{Permissible deformation, DP}}{\text{Analyzed deformation causing loss of function, DL}}$	$\leq \frac{0.90}{SF_{min}}$
b.[2]	$\frac{\text{Permissible deformation, DP}}{\text{Experimental deformation causing loss of function, DE}}$	$\leq \frac{1.00}{SF_{min}}$

where:

DP = Permissible deformation under stated conditions of Service Levels A, B, C or D (normal, upset, emergency or fault).

DL = Analyzed deformation which could cause a system loss of function.[1]

DE = Experimentally determined deformation which could cause a system loss of function.

SF_{min} = Minimum safety factor (refer to Subsection 3.9.5.4).

Notes:

(1) "Loss of Function" can only be defined quite generally until attention is focused on the component of interest. In cases of interest, where deformation limits can affect the function of equipment and components, they may be specifically delineated. From a practical viewpoint, it is convenient to interchange some deformation condition at which function is assured with the loss of function condition if the required safety margins from the functioning conditions can be achieved. Therefore, it is often unnecessary to determine the actual loss of function condition because this interchange procedure produces conservative and safe designs. Examples where deformation limits apply are CRD alignment and clearances for proper insertion, or excess leakage of any component.

(2) Equation b will not be used unless supporting data are provided to the NRC.

Table 3.9-5

Primary Stress Limit for Safety Class Reactor Internal Structures Only

	Any One of (No More than One Required)	General Limit
a.	Elastic evaluated primary stresses, PE / Permissible primary stresses, PN	$\leq \frac{2.25}{SF_{min}}$
b.	Permissible load, LP / Largest lower bound limit load, CL	$\leq \frac{1.5}{SF_{min}}$
c.	Elastic evaluated primary stress, PE / Conventional ultimate strength at temperature, US	$\leq \frac{0.75}{SF_{min}}$
d.	Elastic-plastic evaluated nominal primary stress, EP / Conventional ultimate strength at temperature, US	$\leq \frac{0.9}{SF_{min}}$
e.(1)	Permissible load, LP / Plastic instability load, PL	$\leq \frac{0.9}{SF_{min}}$
f.(1)	Permissible load, LP / Ultimate load from fracture analysis, UF	$\leq \frac{0.9}{SF_{min}}$
g.(1)	Permissible load, LP / Ultimate load or loss of function load from test, LE	$\leq \frac{1.0}{SF_{min}}$

where:

PE = Primary stresses evaluated on an elastic basis. The effective membrane stresses are to be averaged through the load carrying section of interest. The simplest average bending, shear or torsion stress distribution, which supports the external loading, is added to the membrane stresses at the section of interest.

PN = Permissible primary stress levels under service level A or B (normal or upset) conditions under ASME B&PV Code, Section III.

LP = Permissible load under stated conditions of service level A, B, C or D (normal, upset, emergency or faulted).

CL = Lower bound limit load with yield point equal to 1.5 Sm where Sm is the tabulated value of allowable stress at temperature per the ASME B&PV Code or its equivalent. The "lower bound limit load" is here defined as that produced from the analysis of an ideally plastic (non-strain hardening) material where deformations increase with no further increase in applied load. The lower bound load is one in which the material everywhere satisfies equilibrium and nowhere exceeds the defined material yield strength using either a shear theory or a strain energy of distortion theory to relate multiaxial yield to the uniaxial case.

US = Conventional ultimate strength at temperature or loading which would cause a system malfunction, whichever is more limiting.

EP = Elastic plastic evaluated nominal primary stress. Strain hardening of the material may be used for the actual monotonic stress strain curve at the temperature of loading or any approximation to the actual stress curve which everywhere has a lower stress for the same strain as the actual monotonic curve may be used. Either the shear or strain energy of distortion flow rule may be used.

PL = Plastic instability loads. The "Plastic Instability Load" is defined here as the load at which any load bearing section begins to diminish its cross-sectional area at a faster rate than the strain hardening can accommodate the loss in area. This type analysis requires a true-stress/true-strain curve or a close approximation based on monotonic loading at the temperature of loading.

UF = Ultimate load from fracture analyses. For components, which involve sharp discontinuities (local theoretical stress concentration), the use of a "Fracture Mechanics" analysis where applicable utilizing measurements of plane strain fracture toughness may be applied to compute fracture loads. Correction for finite plastic zones and thickness effects as well as gross yielding may be necessary. The methods of linear elastic stress analysis may be used in the fracture analysis where its use is clearly conservative or supported by experimental evidence. Examples where "Fracture Mechanics" may be applied are for fillet welds or end-of-fatigue-life crack propagation.

LE = Ultimate load or loss of function load as determined from experiment. In using this method, account is taken of the dimensional tolerances, which may exist between the actual part and the tested part or parts as well as differences, which may exist in the ultimate tensile strength of the actual part and the tested parts. The guide to be used in each of these areas is that the experimentally determined load is adjusted to account for material property and dimension variations, each of which has no greater probability than 0.1 of being exceeded in the actual part.

SF_{min} = Minimum safety factor (Subsection 3.9.5.4).

Notes:

(1) Equations e, f, or g will not be used unless supporting data are provided to the NRC for review and approval.

Table 3.9-6

Buckling Stability Limit for Safety Class Reactor Internal Structures Only

	Any One Of (No More Than One Required)	General Limit
a.	$\frac{\text{Permissible load, LP}}{\text{Service level A (normal) permissible load, PN}}$	$\leq \frac{2.25}{SF_{min}}$
b.	$\frac{\text{Permissible load, LP}}{\text{Stability analysis load, SL}}$	$\leq \frac{0.9}{SF_{min}}$
c.[1]	$\frac{\text{Permissible load, LP}}{\text{Ultimate buckling collapse load from test, SET}}$	$\leq \frac{1.0}{SF_{min}}$

where:

LP = permissible load under stated conditions of service levels A, B, C or D (normal, upset, emergency or faulted)

PN = applicable Service Level A (normal) event permissive load

SL = Stability analysis load. The ideal buckling analysis is often sensitive to otherwise minor deviations from ideal geometry and boundary conditions. These effects are accounted for in the analysis of the buckling stability loads. Examples of this are ovality in externally pressurized shells or eccentricity on column members.

SET = Ultimate buckling collapse load as determined from experiment. In using this method, account is taken of the dimensional tolerances, which may exist between the actual part and the tested part. The guide to be used in each of these areas is that the experimentally determined load is adjusted to account for material property and dimension variations, each of which has no greater probability than 0.1 of being exceeded in the actual part.

SF_{min} = minimum safety factor (refer to Subsection 3.9.5.4)

Notes:

(1) Equation c is not used unless supporting data are provided to the NRC.

Table 3.9-7

Fatigue Limit for Safety Class Reactor Internal Structures Only

Cumulative Damage From Fatigue[1]	Limit for Service Levels A&B (Normal and Upset Conditions)
Design fatigue cycle usage from analysis using the method of the ASME B&PV Code	≤ 1.0

[1] Reference 3.9-4.

Table 3.9-8

Inservice Testing

Number	Quantity	Description[g]	Valve Type[i]	Actuator[b]	Code Class [a]	Code Category[c]	Valve Function[d]	Normal Position	Safety Position	Fail Safe Position	Containment Isolation Valve	Test Parameter[e]	Test Frequency[f]
B21 Nuclear Boiler System Valves													
F710	1	Excess flow check valve – RPV shutdown range water level instrument reference leg line [g6]	CK	SA	2	A, C	A	O	O/C	N/A	Y	L SO SC	App J RO RO
F701	4	Excess flow check valve – RPV water level instrument reference leg line [g6]	CK	SA	2	A, C	A	O	O/C	N/A	Y	L SO SC	App J RO RO
F703	4	Excess flow check valve – RPV narrow range water level instrument sensing line [g6]	CK	SA	2	A, C	A	O	O/C	N/A	Y	SO SC L	RO RO App J
F705	4	Excess flow check valve – RPV wide range water level instrument sensing line [g6]	CK	SA	2	A, C	A	O	O/C	N/A	Y	SO SC L	RO RO App J
F707	4	Excess flow check valve – RPV fuel zone range water level instrument sensing line [g6]	CK	SA	2	A, C	A	O	O/C	N/A	Y	SC SO L	RO RO AppJ

Table 3.9-8

Inservice Testing

Number	Quantity	Description[g]	Valve Type[i]	Actuator[b]	Code Class[a]	Code Category[c]	Valve Function[d]	Normal Position	Safety Position	Fail Safe Position	Containment Isolation Valve	Test Parameter[e]	Test Frequency[f]
F099	2	Feedwater (FW) supply line second outboard check valve (g9)	CK	SA	2	A, C	A	O	C	N/A	---	SO SC L	RO RO 2 yrs
F100	2	FW supply line second containment isolation valve (g20)	GT	PM	1	A	A	O	C	C	Y	SC FC L P	RO RO App J 2 yrs
F101	2	FW supply line outboard containment isolation valve (g20)	GT	PM	1	A	A	O	C	C	Y	L SC FC P	App J RO RO 2 yrs
F102	2	FW supply line inboard containment isolation valve (g9)	CK	SA	1	A, C	A	O	O/C	N/A	Y	SO SC P L	RO RO 2 yrs App J

Table 3.9-8

Inservice Testing

Number	Quantity	Description[g]	Valve Type[i]	Actuator[b]	Code Class [a]	Code Category[c]	Valve Function[d]	Normal Position	Safety Position	Fail Safe Position	Containment Isolation Valve	Test Parameter[e]	Test Frequency[f]
F111	2	RWCU/SDC to Feedwater outboard containment isolation valve [g21]	CK	SA with AO	1	A, C	A	O	O/C	O	Y	SO SC FO L P	RO RO RO App J 2 yrs
F001	4	Inboard MSIV [g10]	GT	PM	1	A	A	O	C	C	Y	L P SC FC	App J 2 yrs CS CS
F002	4	Outboard MSIV [g10]	GT	PM	1	A	A	O	C	C	Y	L P SC FC	App J 2 yrs CS CS
F006	10	Safety relief valve (SRV) [g1]	RV	SA with NO	1	A, C	A	C	O/C	N/A	--	R	5 yrs
F003	8	Safety Valve [g1]	RV	SA	1	A, C	A	C	O/C	N/A	--	R	5 yrs

Table 3.9-8

Inservice Testing

Number	Quantity	Description[g]	Valve Type[i]	Actuator[b]	Code Class [a]	Code Category[c]	Valve Function[d]	Normal Position	Safety Position	Fail Safe Position	Containment Isolation Valve	Test Parameter[e]	Test Frequency[f]
F004	8	DPV	SQ	EX	1	D	A	C	O	as-is	--	X P	E2 2 yrs
F010	1	Inboard MSIV upstream drain line inboard containment isolation valve	QBL	NO	1	A	A	O	C	C	Y	L P SC FC	App J 2 yrs 3 mo 3 mo
F011	1	Inboard MSIV upstream drain line outboard containment isolation valve	QBL	NO	1	A	A	O	C	C	Y	L P SC FC	App J 2 yrs 3 mo 3mo
F016	4	Outboard MSIV upstream drain line outboard containment isolation valve	QBL	AO	1	A	A	O	O/C	C	Y	L P SC SO FC	App J 2 yrs 3 mo 3 mo 3 mo
F715	4	Excess flow check valve – MSL flow restrictor instrument line [g6]	CK	SA	2	A, C	A	O	O/C	N/A	Y	L SO SC	App J RO RO

Table 3.9-8

Inservice Testing

Number	Quantity	Description[g]	Valve Type[i]	Actuator[b]	Code Class [a]	Code Category[c]	Valve Function[d]	Normal Position	Safety Position	Fail Safe Position	Containment Isolation Valve	Test Parameter[e]	Test Frequency[f]
F713	4	Excess flow check valve – MSL flow restrictor instrument line [g6]	CK	SA	2	A, C	A	O	O/C	N/A	Y	L SO SC	App J RO RO
F026	1	RPV top head vent inboard shutoff valve [g2]	QBL	NO	1	B	A	C	C	C	--	P SC FC	2 yrs CS CS
F027	1	RPV top head vent outboard shutoff valve [g2]	QBL	NO	1	B	A	C	C	C	--	P SC FC	2 yrs CS CS
F007	10	SRV discharge line inboard vacuum breaker [g11]	VB	SA	3	C	A	C	O/C	N/A	--	R SC SO	2 yrs RO RO
F008	10	SRV discharge line outboard vacuum breaker [g11]	VB	SA	3	C	A	C	O/C	N/A	--	R SC SO	2 yrs RO RO
F035	10	SRV pneumatic supply line check valve [g12]	CK	SA	3	C	A	C	C	N/A	--	SC SO	RO RO

Table 3.9-8

Inservice Testing

Number	Quantity	Description[g]	Valve Type[i]	Actuator[b]	Code Class [a]	Code Category[c]	Valve Function[d]	Normal Position	Safety Position	Fail Safe Position	Containment Isolation Valve	Test Parameter[e]	Test Frequency[f]
F031	4	Inboard MSIV air supply line check valve [g13]	CK	SA	3	C	A	C	C	N/A	--	SO SC	RO RO
F032	4	Outboard MSIV air supply line check valve [g13]	CK	SA	3	C	A	C	C	N/A	--	SC SO	RO RO
F028	1	RPV head vent discharge line vacuum breaker [g11]	VB	SA	3	C	A	C	O/C	N/A	--	R SC SO	2 yrs RO RO
B32 Isolation Condenser System Valves													
F001	4	Steam supply line isolation valve	QBL	EH	1	A	A	O	O/C	as-is	Y	L P SC SO	App J 2 yrs 3 mo 3 mo
F002	4	Steam supply line isolation valve	GT	NO	1	A	A	O	O/C	as-is	Y	L P SC SO	App J 2 yrs 3 mo 3 mo

Table 3.9-8

Inservice Testing

Number	Quantity	Description[g]	Valve Type[i]	Actuator[b]	Code Class [a]	Code Category[c]	Valve Function[d]	Normal Position	Safety Position	Fail Safe Position	Containment Isolation Valve	Test Parameter[e]	Test Frequency[f]
F003	4	Condensate return line isolation valve	QBL	NO	1	A	A	O	O/C	as-is	Y	L P SC SO	App J 2 yrs 3 mo 3 mo
F004	4	Condensate return line isolation valve	GT	EH	1	A	A	O	O/C	as-is	Y	L P SC SO	App J 2 yrs 3 mo 3 mo
F005	4	Condensate return valve	QBL	EH	1	B	A	C	O	as-is	--	P SO	2 yrs 3 mo
F006	4	Condensate return bypass valve	QBF	NO	1	B	A	C	O	O	--	P SO FO	2 yrs 3 mo 3 mo
F007	4	Condenser upper header vent valve	GB	SO	2	A	A	C	C	C	Y	L P SC FC	App J 2 yrs 3 mo 3 mo

Table 3.9-8

Inservice Testing

Number	Quantity	Description[g]	Valve Type[i]	Actuator[b]	Code Class [a]	Code Category[c]	Valve Function[d]	Normal Position	Safety Position	Fail Safe Position	Containment Isolation Valve	Test Parameter[e]	Test Frequency[f]
F008	4	Condenser upper header vent valve	GB	SO	2	A	A	C	C	C	Y	L P SC FC	App J 2 yrs 3 mo 3 mo
F009	4	Condenser lower header vent valve	GB	SO	2	A	A	C	C	C	Y	L P SC FC	App J 2 yrs 3 mo 3 mo
F010	4	Condenser lower header vent valve	GB	SO	2	A	A	C	C	C	Y	L P SC FC	App J 2 yrs 3 mo 3 mo
F011	4	Bypass lower header vent valve	RV	SA	2	A	A	C	O/C	N/A	Y	R L	10 yrs App J

Table 3.9-8

Inservice Testing

Number	Quantity	Description[g]	Valve Type[i]	Actuator[b]	Code Class [a]	Code Category[c]	Valve Function[d]	Normal Position	Safety Position	Fail Safe Position	Containment Isolation Valve	Test Parameter[e]	Test Frequency[f]
F012	4	Bypass lower header vent valve	GB	SO	2	A	A	C	O/C	O	Y	L P SC SO FO	App J 2 yrs 3 mo 3 mo 3 mo
F013	4	Condenser purge line isolation valve	GB	SO	1	A	A	O	O/C	C	Y	SO SC FC P L	3 mo 3 mo 3 mo 2 yrs App J
F014	4	Condenser purge line isolation valve [g4]	CK	SA	1	A, C	A	O	O	N/A	Y	L P SO SC	App J 2 yrs RO RO
F104	2	Pool cross-connect valve	SQ	EX	3	D	A	C	O	as-is	--	X	E2
F105	2	Pool cross-connect valve	QBF	AO	3	B	A	C	O	as-is	--	SO	3 mo
F017	4	High Pressure Nitrogen check valve [g5]	CK	SA	2	C	A	C	C	N/A	--	SO SC	RO RO

Table 3.9-8

Inservice Testing

Number	Quantity	Description[g]	Valve Type[i]	Actuator[b]	Code Class [a]	Code Category[c]	Valve Function[d]	Normal Position	Safety Position	Fail Safe Position	Containment Isolation Valve	Test Parameter[e]	Test Frequency[f]
F018	4	High Pressure Nitrogen check valve [g5]	CK	SA	2	C	A	C	C	N/A	--	SO SC	RO RO
F701	4	Excess flow check valve – steam supply line differential pressure instrument sensing line [g6]	CK	SA	2	A, C	A	O	O/C	N/A	Y	L P SC SO	App J 2 yrs RO RO
F703	4	Excess flow check valve – steam supply line differential pressure instrument sensing line [g6]	CK	SA	2	A, C	A	O	O/C	N/A	Y	L P SC SO	App J 2 yrs RO RO
F705	4	Excess flow check valve – steam supply line differential pressure instrument sensing line [g6]	CK	SA	2	A, C	A	O	O/C	N/A	Y	L P SC SO	App J 2 yrs RO RO
F707	4	Excess flow check valve – steam supply line differential pressure instrument sensing line [g6]	CK	SA	2	A, C	A	O	O/C	N/A	Y	L P SC SO	App J 2 yrs RO RO

Table 3.9-8

Inservice Testing

Number	Quantity	Description[g]	Valve Type[i]	Actuator[b]	Code Class [a]	Code Category[c]	Valve Function[d]	Normal Position	Safety Position	Fail Safe Position	Containment Isolation Valve	Test Parameter[e]	Test Frequency[f]
F709	4	Excess flow check valve – condensate return line differential pressure instrument sensing line [g6]	CK	SA	2	A, C	A	O	O/C	N/A	Y	L P SC SO	App J 2 yrs RO RO
F711	4	Excess flow check valve – condensate return line differential pressure instrument sensing line [g6]	CK	SA	2	A, C	A	O	O/C	N/A	Y	L P SC SO	App J 2 yrs RO RO
F713	4	Excess flow check valve – condensate return line differential pressure instrument sensing line [g6]	CK	SA	2	A, C	A	O	O/C	N/A	Y	L P SC SO	App J 2 yrs RO RO
F715	4	Excess flow check valve – condensate return line differential pressure instrument sensing line [g6]	CK	SA	2	A, C	A	O	O/C	N/A	Y	L P SC SO	App J 2 yrs RO RO

Table 3.9-8

Inservice Testing

Number	Quantity	Description[g]	Valve Type[i]	Actuator[b]	Code Class [a]	Code Category[c]	Valve Function[d]	Normal Position	Safety Position	Fail Safe Position	Containment Isolation Valve	Test Parameter[e]	Test Frequency[f]
C12 Control Rod Drive System Valves													
F022	1	High pressure makeup line check valve [g7]	CK	SA	2	C	A	O	O/C	N/A	--	SO SC	RO RO
D005	269	Ball check valve – CRD drive insert line [g7]	CK	SA	3	C	A	O	O/C	N/A	--	SO SC	RO RO
F071	1	High pressure makeup line isolation valve	QBL	AO	2	B	A	O	C	Closed	--	P FC SC	2 yrs 3 mo 3 mo
F072	1	High pressure makeup line isolation valve	QBL	AO	2	B	A	O	C	Closed	--	P FC SC	2 yrs 3 mo 3 mo
C41 Standby Liquid Control (SLC) System Valves													
F002	4	SLC injection line shutoff valve	QBL	AO	2	A	A	O	O/C	as-is	--	SO SC P L	3 mo 3 mo 2 yrs 2 yrs

Table 3.9-8

Inservice Testing

Number	Quantity	Description[g]	Valve Type[i]	Actuator[b]	Code Class [a]	Code Category[c]	Valve Function[d]	Normal Position	Safety Position	Fail Safe Position	Containment Isolation Valve	Test Parameter[e]	Test Frequency[f]
F003	4	SLC injection line squib valve	SQ	EX	1	A, D	A	C	O	as-is	Y	X L	E2 App J
F004	2	SLC injection line outboard check valve [g14]	CK	SA	1	A, C	A	C	O/C	N/A	Y	L SC SO	App J RO RO
F005	2	SLC injection line inboard check valve [g14]	CK	SA	1	A, C	A	C	O/C	N/A	Y	L SC SO	App J RO RO
F030	2	SLC accumulator tank relief valve	RV	SA	2	C	A	C	O/C	N/A	--	R	10 yrs
F507	2	SLC accumulator tank inboard vent valve	GB	AO	2	B	A	C	O/C	C	--	P SC SO FC	2 yrs 3 mo 3 mo 3 mo
F508	2	SLC accumulator tank outboard vent valve	GB	AO	2	B	A	C	O/C	C	--	P SC SO FC	2 yrs 3 mo 3 mo 3 mo

Table 3.9-8

Inservice Testing

Number	Quantity	Description[g]	Valve Type[i]	Actuator[b]	Code Class [a]	Code Category[c]	Valve Function[d]	Normal Position	Safety Position	Fail Safe Position	Containment Isolation Valve	Test Parameter[e]	Test Frequency[f]
D11 Process Radiation Monitoring System Valves													
F001	1	Drywell Fission Product Monitoring Line Inboard isolation Valve	GB	SO	2	A	A	O	O	as-is	Y	SO P L	3 mo 2 yrs App J
F002	1	Drywell Fission Product Monitoring Line Outboard isolation Valve	GB	SO	2	A	A	O	O	as-is	Y	SO P L	3 mo 2 yrs App J
F003	1	Drywell Fission Product Monitoring Line Inboard isolation Valve	GB	SO	2	A	A	O	O	as-is	Y	SO P L	3 mo 2 yrs App J
F004	1	Drywell Fission Product Monitoring Line Outboard isolation Valve	GB	SO	2	A	A	O	O	as-is	Y	SO P L	3 mo 2 yrs App J

Table 3.9-8

Inservice Testing

Number	Quantity	Description[g]	Valve Type[i]	Actuator[b]	Code Class [a]	Code Category[c]	Valve Function[d]	Normal Position	Safety Position	Fail Safe Position	Containment Isolation Valve	Test Parameter[e]	Test Frequency[f]
T62 Containment Monitoring System Valves													
F001	2	Drywell to Sample Rack Inboard	QBL	AO	2	A	A	O	O	O	Y	SO FO P L	3 mo 3 mo 2 yrs App J
F002	2	Drywell to Sample Rack Outboard	QBL	AO	2	A	A	O	O	O	Y	SO FO P L	3 mo 3 mo 2 yrs App J
F006	2	Gas Sample Return to Wetwell Inboard	QBL	AO	2	A	A	O	O	O	Y	SO FO P L	3 mo 3 mo 2 yrs App J
F005	2	Gas Sample Return to Wetwell Outboard	QBL	AO	2	A	A	O	O	O	Y	SO FO P L	3 mo 3 mo 2 yrs App J

Table 3.9-8

Inservice Testing

Number	Quantity	Description[g]	Valve Type[i]	Actuator[b]	Code Class [a]	Code Category[c]	Valve Function[d]	Normal Position	Safety Position	Fail Safe Position	Containment Isolation Valve	Test Parameter[e]	Test Frequency[f]
F003	2	Wetwell to Sample Rack Inboard	QBL	AO	2	A	A	O	O	O	Y	SO FO P L	3 mo 3 mo 2 yrs App J
F004	2	Wetwell to Sample Rack Outboard	QBL	AO	2	A	A	O	O	O	Y	SO FO P L	3 mo 3 mo 2 yrs App J
F701	4	Suppression Pool Level Narrow Range	QBL	AO	2	A	A	O	O	O	Y	SO FO P L	3 mo 3 mo 2 yrs App J
F703	4	Suppression Pool Level Narrow Range	QBL	AO	2	A	A	O	O	O	Y	SO FO P L	3 mo 3 mo 2 yrs App J

Table 3.9-8

Inservice Testing

Number	Quantity	Description[g]	Valve Type[i]	Actuator[b]	Code Class [a]	Code Category[c]	Valve Function[d]	Normal Position	Safety Position	Fail Safe Position	Containment Isolation Valve	Test Parameter[e]	Test Frequency[f]
F705	2	Suppression Pool Level Wide Range	QBL	AO	2	A	A	O	O	O	Y	SO FO P L	3 mo 3 mo 2 yrs App J
F707	2	Suppression Pool Level Wide Range	QBL	AO	2	A	A	O	O	O	Y	SO FO P L	3 mo 3 mo 2 yrs App J
F709	2	Suppression Pool Level Wide Range	QBL	AO	2	A	A	O	O	O	Y	SO FO P L	3 mo 3 mo 2 yrs App J
F711	2	Suppression Pool Level Wide Range	QBL	AO	2	A	A	O	O	O	Y	SO FO P L	3 mo 3 mo 2 yrs App J

Table 3.9-8

Inservice Testing

Number	Quantity	Description[g]	Valve Type[i]	Actuator[b]	Code Class [a]	Code Category[c]	Valve Function[d]	Normal Position	Safety Position	Fail Safe Position	Containment Isolation Valve	Test Parameter[e]	Test Frequency[f]
F713	2	Lower Drywell Level Post Accident Monitoring (PAM)	QBL	AO	2	A	A	O	O	O	Y	SO FO P L	3 mo 3 mo 2 yrs App J
F715	2	Lower Drywell Level PAM	QBL	AO	2	A	A	O	O	O	Y	SO FO P L	3 mo 3 mo 2 yrs App J
F717	4	Lower Drywell Level Isolation	QBL	AO	2	A	A	O	O	O	Y	SO FO P L	3 mo 3 mo 2 yrs App J
F719	4	Lower Drywell Level Isolation	QBL	AO	2	A	A	O	O	O	Y	SO FO P L	3 mo 3 mo 2 yrs App J

Table 3.9-8

Inservice Testing

Number	Quantity	Description[g]	Valve Type[i]	Actuator[b]	Code Class [a]	Code Category[c]	Valve Function[d]	Normal Position	Safety Position	Fail Safe Position	Containment Isolation Valve	Test Parameter[e]	Test Frequency[f]
F721	2	Drywell Upper Level Isolation	QBL	AO	2	A	A	O	O	O	Y	SO FO P L	3 mo 3 mo 2 yrs App J
F723	2	Drywell Upper Level Isolation	QBL	AO	2	A	A	O	O	O	Y	SO FO P L	3 mo 3 mo 2 yrs App J
F725	2	Drywell/Wetwell Delta Pressure	QBL	AO	2	A	A	O	O	O	Y	SO FO P L	3 mo 3 mo 2 yrs App J
F727	2	Drywell/Wetwell Delta Pressure	QBL	AO	2	A	A	O	O	O	Y	SO FO P L	3 mo 3 mo 2 yrs App J

Table 3.9-8

Inservice Testing

Number	Quantity	Description[g]	Valve Type[i]	Actuator[b]	Code Class [a]	Code Category[c]	Valve Function[d]	Normal Position	Safety Position	Fail Safe Position	Containment Isolation Valve	Test Parameter[e]	Test Frequency[f]
F729	2	Drywell Pressure PAM	QBL	AO	2	A	A	O	O	O	Y	SO FO P L	3 mo 3 mo 2 yrs App J
F731	4	Drywell Pressure Narrow Range	QBL	AO	2	A	A	O	O	O	Y	SO FO P L	3 mo 3 mo 2 yrs App J
F733	4	Drywell Pressure Wide Range	QBL	AO	2	A	A	O	O	O	Y	SO FO P L	3 mo 3 mo 2 yrs App J
F735	2	Wetwell Pressure	QBL	AO	2	A	A	O	O	O	Y	SO FO P L	3 mo 3 mo 2 yrs App J

Table 3.9-8

Inservice Testing

Number	Quantity	Description[g]	Valve Type[i]	Actuator[b]	Code Class[a]	Code Category[c]	Valve Function[d]	Normal Position	Safety Position	Fail Safe Position	Containment Isolation Valve	Test Parameter[e]	Test Frequency[f]
E50 Gravity-Driven Cooling System Valves													
F001	8	GDCS injection line manual shutoff valve	QBL	M	1	B	P	O	O	N/A	--	P	2 yrs
F002	8	GDCS injection squib actuated valve	SQ	EX	1	D	A	C	O	as-is	--	X P	E2 2 yrs
F003	8	GDCS check valve [g8]	CK	SA	1	A, C	A	O	O/C	N/A	--	L SC SO P	RO RO RO 2 yrs
F004	4	GDCS manual shutoff valve	QBL	M	2	B	P	O	O	N/A	--	P	2 yrs
F005	4	GDCS equalization line manual shutoff valve	QBL	M	1	B	P	O	O	N/A	--	P	2 yrs
F006	4	GDCS equalization squib actuated valve	SQ	EX	1	D	A	C	O	as-is	--	X P	E2 2 yrs

Table 3.9-8

Inservice Testing

Number	Quantity	Description[g]	Valve Type[i]	Actuator[b]	Code Class[a]	Code Category[c]	Valve Function[d]	Normal Position	Safety Position	Fail Safe Position	Containment Isolation Valve	Test Parameter[e]	Test Frequency[f]
F007	4	GDCS check valve [g8]	CK	SA	1	A, C	A	O	O/C	N/A	--	L SO SC P	RO RO RO 2 yrs
F008	4	GDCS manual shutoff valve	QBL	M	2	B	P	O	O	N/A	--	P	2 yrs
F009	12	GDCS deluge squib valve	SQ	EX	2	D	P	C	C	as-is	--	X P	E2 2 yrs
F010	4	GDCS deluge line isolation valve	QBL	NO	2	B	P	O	O	as-is	--	P	2 yrs
G21 Fuel and Auxiliary Pools Cooling System (FAPCS) Valves													
F210	1	Emergency makeup spent fuel pool water line check valve	CK	SA	3	C	A	O	O/C	N/A	--	SO SC	3 mo 3 mo
F211	1	Emergency makeup spent fuel pool water line shutoff valve	QBL	M	3	B	A	C	O	N/A	--	SO	2 yrs

Table 3.9-8

Inservice Testing

Number	Quantity	Description[g]	Valve Type[i]	Actuator[b]	Code Class [a]	Code Category[c]	Valve Function[d]	Normal Position	Safety Position	Fail Safe Position	Containment Isolation Valve	Test Parameter[e]	Test Frequency[f]
F212	1	Reactor well drain line containment isolation valve	QBL	M	2	A	P	C	C	N/A	Y	P L	2 yrs App J
F213	1	Reactor well drain line second containment isolation valve	QBL	M	2	A	P	C	C	N/A	Y	P L	2 yrs App J
F303	1	GDCS pool return line outboard isolation valve	QBL	AO	2	A	A	C	C	C	Y	SC FC L P	3 mo 3 mo App J 2 yrs
F304	1	GDCS pool return line inboard isolation check valve	CK	SA	2	A, C	A	C	C	N/A	Y	SO SC L	3 mo 3 mo App J
F306	2	Suppression pool return line outboard isolation valve	QBL	AO	2	A	A	C	C	as-is	Y	SC L P	3 mo App J 2 yrs
F307	2	Suppression pool return line inboard isolation check valve	CK	SA	2	A, C	A	C	C	N/A	Y	SO SC L	3 mo 3 mo App J

Table 3.9-8

Inservice Testing

Number	Quantity	Description[g]	Valve Type[i]	Actuator[b]	Code Class [a]	Code Category[c]	Valve Function[d]	Normal Position	Safety Position	Fail Safe Position	Containment Isolation Valve	Test Parameter[e]	Test Frequency[f]
F309	1	Drywell spray line outboard isolation valve	QBL	AO	2	A	A	C	C	C	Y	SC FC L P	3 mo 3 mo App J 2 yrs
F310	1	Drywell spray line inboard isolation check valve [g15]	CK	SA	2	A, C	A	C	C	N/A	Y	SO SC L	RO RO App J
F323	1	GDCS pool suction line inboard isolation valve	QBL	NO	2	A	A	C	C	C	Y	SC FC L P	3 mo 3 mo App J 2 yrs
F324	1	GDCS pool suction line outboard isolation valve	QBL	AO	2	A	A	C	C	C	Y	SC FC L P	3 mo 3 mo App J 2 yrs
F321	2	Suppression pool suction line outboard isolation valve	QBL	AO	2	A	A	C	C	as-is	Y	SC L P	3 mo App J 2 yrs

Table 3.9-8

Inservice Testing

Number	Quantity	Description[g]	Valve Type[i]	Actuator[b]	Code Class [a]	Code Category[c]	Valve Function[d]	Normal Position	Safety Position	Fail Safe Position	Containment Isolation Valve	Test Parameter[e]	Test Frequency[f]
F322	2	Suppression pool suction line second isolation valve	QBL	AO	2	A	A	C	C	as-is	Y	SC L P	3 mo App J 2 yrs
F333	2	Low Pressure Coolant Injection (LPCI) testable check valve [g16]	CK	AO	2	A, C	A	C	C	C	--	SC SO FC L P	RO RO RO 2 yrs 2 yrs
F420	1	Emergency makeup Isolation Condenser/Passive Containment Cooling System (IC/PCCS) pool water line shutoff valve	QBL	M	3	B	A	C	O	N/A	--	SO	2 yrs
F421	1	Emergency makeup IC/PCCS pool water line check valve	CK	SA	3	C	A	C	O/C	N/A	--	SO SC	3 mo 3 mo
F426	2	Fire Protection System (FPS) water makeup valve to IC/PCCS pool	QBL	M	3	B	A	C	O	N/A	--	SO	2 yrs

Table 3.9-8

Inservice Testing

Number	Quantity	Description[g]	Valve Type[i]	Actuator[b]	Code Class [a]	Code Category[c]	Valve Function[d]	Normal Position	Safety Position	Fail Safe Position	Containment Isolation Valve	Test Parameter[e]	Test Frequency[f]
F427	2	FPS water makeup check valve to IC/PCCS pool	CK	SA	3	C	A	C	O/C	N/A	--	SO SC	3 mo 3 mo
F428	2	FPS water makeup valve to Spent Fuel Pool	QBL	M	3	B	A	C	O	N/A	--	SO	2 yrs
F429	2	FPS water makeup check valve to Spent Fuel Pool	CK	SA	3	C	A	C	O/C	N/A	--	SO SC	3 mo 3 mo
G31 Reactor Water Cleanup/Shutdown Cooling System Valves													
F002	2	RWCU/SDC mid-vessel suction line inboard isolation valve	QBL	NO	1	A	A	O	C	C	Y	L P SC FC	App J 2 yrs 3 mo 3 mo
F003	2	RWCU/SDC mid-vessel suction line outboard isolation valve	QBL	AO	1	A	A	O	C	C	Y	L P SC FC	App J 2 yrs 3 mo 3 mo

Table 3.9-8

Inservice Testing

Number	Quantity	Description[g]	Valve Type[i]	Actuator[b]	Code Class [a]	Code Category[c]	Valve Function[d]	Normal Position	Safety Position	Fail Safe Position	Containment Isolation Valve	Test Parameter[e]	Test Frequency[f]
F007	2	RWCU/SDC bottom head suction line inboard isolation valve	QBL	NO	1	A	A	O	C	C	Y	L P SC FC	App J 2 yrs 3 mo 3 mo
F008	2	RWCU/SDC bottom head suction line outboard isolation valve	QBL	AO	1	A	A	O	C	C	Y	L P SC FC	App J 2 yrs 3 mo 3 mo
F038	2	RWCU/SDC bottom head suction line sample line inboard isolation valve	GB	SO	1	A	A	C	O/C	C	Y	L P SO SC FC	App J 2 yrs 3 mo 3 mo 3 mo
F039	2	RWCU/SDC bottom head suction line sample line outboard isolation valve	GB	SO	1	A	A	C	O/C	C	Y	L P SO SC FC	App J 2 yrs 3 mo 3 mo 3 mo

Table 3.9-8

Inservice Testing

Number	Quantity	Description[g]	Valve Type[i]	Actuator[b]	Code Class [a]	Code Category[c]	Valve Function[d]	Normal Position	Safety Position	Fail Safe Position	Containment Isolation Valve	Test Parameter[e]	Test Frequency[f]
U50 Equipment and Floor Drain System Valves													
F001	1	Drywell equipment drain (low conductivity waste [LCW]) sump discharge line inboard isolation valve	QBL	NO	2	A	A	C	C	C	Y	L P SC FC	App J 2 yrs 3 mo 3 mo
F002	1	Drywell equipment drain (LCW) sump discharge line outboard isolation valve	QBL	AO	2	A	A	C	C	C	Y	L P SC FC	App J 2 yrs 3 mo 3 mo
F003	1	Drywell floor drain (high conductivity waste [HCW]) sump discharge line inboard isolation valve	QBL	NO	2	A	A	C	C	C	Y	L P SC FC	App J 2 yrs 3 mo 3 mo
F004	1	Drywell floor drain (HCW) sump discharge line outboard isolation valve	QBL	AO	2	A	A	C	C	C	Y	L P SC FC	App J 2 yrs 3 mo 3 mo

Table 3.9-8

Inservice Testing

Number	Quantity	Description[g]	Valve Type[i]	Actuator[b]	Code Class [a]	Code Category[c]	Valve Function[d]	Normal Position	Safety Position	Fail Safe Position	Containment Isolation Valve	Test Parameter[e]	Test Frequency[f]
P10 Makeup Water System													
F016	1	Demineralizer water drywell distribution system inboard containment isolation valve	CK	SA	2	A/C	A	C	C	N/A	Y	SO SC L P	3 mo 3 mo App J 2 yrs
F015	1	Demineralizer water drywell distribution system outboard containment isolation valve	QBL	M	2	A	P	C	C	N/A	Y	L P	App J 2 yrs
P25 Chilled Water System Valves													
F023	2	Chilled water supply line to drywell cooler outboard isolation valve	GT	SO	2	A	A	O	C	C	Y	L P SC FC	App J 2 yrs 3 mo 3 mo
F024	2	Chilled water supply line to drywell cooler inboard isolation valve	QBL	NO	2	A	A	O	C	C	Y	L P SC FC	App J 2 yrs 3 mo 3 mo

Table 3.9-8

Inservice Testing

Number	Quantity	Description[g]	Valve Type[i]	Actuator[b]	Code Class[a]	Code Category[c]	Valve Function[d]	Normal Position	Safety Position	Fail Safe Position	Containment Isolation Valve	Test Parameter[e]	Test Frequency[f]
F025	2	Chilled water return line from drywell cooler inboard isolation valve	QBL	NO	2	A	A	O	C	C	Y	L P SC FC	App J 2 yrs 3 mo 3 mo
F026	2	Chilled water return line from drywell cooler outboard isolation valve	GT	SO	2	A	A	O	C	C	Y	L P SC FC	App J 2 yrs 3 mo 3 mo
P51 Service Air System													
F002	1	Service air system inboard containment isolation valve	QBL	M	2	A	P	C	C	N/A	Y	L P	App J 2 yrs
F001	1	Service air system outboard containment isolation valve	QBL	M	2	A	P	C	C	N/A	Y	L P	App J 2 yrs
P54 High Pressure Nitrogen Supply System Valves													
F026	1	Nitrogen supply line outboard isolation valve to MSIV and other uses	QBL	AO	2	A	A	O	C	C	Y	L P SC FC	App J 2 yrs 3 mo 3 mo

Table 3.9-8

Inservice Testing

Number	Quantity	Description[g]	Valve Type[i]	Actuator[b]	Code Class [a]	Code Category[c]	Valve Function[d]	Normal Position	Safety Position	Fail Safe Position	Containment Isolation Valve	Test Parameter[e]	Test Frequency[f]
F027	1	Nitrogen supply line inboard check valve to MSIV and other uses [g5]	CK	SA	2	A, C	A	O/C	C	N/A	Y	L SC SO	App J RO RO
F009	1	Nitrogen supply line outboard isolation valve to ADS, SRV and ICS isolation valve accumulators	QBL	AO	2	A	A	O	C	C	Y	L P SC FC	App J 2 yrs 3 mo 3 mo
F010	1	Nitrogen supply line inboard isolation check valve to ADS, SRV and ICS isolation valve accumulators [g5]	CK	SA	2	A, C	A	O/C	C	N/A	Y	L SC SO	App J RO RO
T10 Containment													
F001	3	Drywell wetwell vacuum breaker isolation valve	QBF	NO	2	A	A	O	O/C	as-is	--	P L SO SC	2 yrs 2 yrs 3 mo 3 mo

Table 3.9-8

Inservice Testing

Number	Quantity	Description[g]	Valve Type[i]	Actuator[b]	Code Class[a]	Code Category[c]	Valve Function[d]	Normal Position	Safety Position	Fail Safe Position	Containment Isolation Valve	Test Parameter[e]	Test Frequency[f]
F002	3	Drywell wetwell vacuum breaker valve [g3]	VB	SA	2	A, C	A	C	O/C	N/A	--	SO SC L P R	RO RO 2 yrs 2 yrs RO
T15 Passive Containment Cooling System Valves													
F001	6	Vent fan check valves	CK	SA	2	A, C	A	C	O/C	N/A	--	L SO SC	2 yrs RO RO
T31 Containment Inerting System Valves													
F012	1	Suppression pool exhaust line outboard isolation valve [g19]	QBF	AO	2	A	A	C	C	C	Y	L P SC FC	App J 2 yrs RO RO
F007	1	Air/Nitrogen supply line to suppression pool outboard isolation valve [g19]	QBF	AO	2	A	A	C	C	C	Y	L P SC FC	App J 2 yrs RO RO

Table 3.9-8

Inservice Testing

Number	Quantity	Description[g]	Valve Type[i]	Actuator[b]	Code Class [a]	Code Category[c]	Valve Function[d]	Normal Position	Safety Position	Fail Safe Position	Containment Isolation Valve	Test Parameter[e]	Test Frequency[f]
F008	1	Air/N2 supply line to outboard isolation valve [g19]	QBF	AO	2	A	A	C	C	C	Y	L P SC FC	App J 2 yrs RO RO
F009	1	Air/N2 supply line to upper drywell outboard isolation valve [g19]	QBF	AO	2	A	A	C	C	C	Y	L P SC FC	App J 2 yrs RO RO
F023	1	N2 makeup line outboard isolation valve	QBL	AO	2	A	A	O	C	C	Y	L P SC FC	App J 2 yrs 3 mo 3 mo
F024	1	N2 makeup line to suppression pool outboard isolation valve	QBL	AO	2	A	A	O	C	C	Y	L P SC FC	App J 2 yrs 3 mo 3 mo

Table 3.9-8

Inservice Testing

Number	Quantity	Description[g]	Valve Type[i]	Actuator[b]	Code Class [a]	Code Category[c]	Valve Function[d]	Normal Position	Safety Position	Fail Safe Position	Containment Isolation Valve	Test Parameter[e]	Test Frequency[f]
F025	1	N2 makeup line to upper drywell outboard isolation valve	QBL	AO	2	A	A	O	C	C	Y	L P SC FC	App J 2 yrs 3 mo 3 mo
F010	1	Lower drywell exhaust line outboard isolation valve	QBF	AO	2	A	A	C	C	C	Y	L P SC FC	App J 2 yrs 3 mo 3 mo
F011	1	Containment atmospheric exhaust line outboard isolation valve	QBF	AO	2	A	A	C	C	C	Y	L P SC FC	App J 2 yrs 3 mo 3 mo
F014	1	Containment atmospheric bleed line outboard isolation valve	QBL	AO	2	A	A	C	C	C	Y	L P SC FC	App J 2 yrs 3 mo 3 mo

Table 3.9-8

Inservice Testing

Number	Quantity	Description[g]	Valve Type[i]	Actuator[b]	Code Class [a]	Code Category[c]	Valve Function[d]	Normal Position	Safety Position	Fail Safe Position	Containment Isolation Valve	Test Parameter[e]	Test Frequency[f]
F015	1	Containment atmospheric bleed line outboard isolation valve	QBL	AO	2	A	A	C	C	C	Y	L P SC FC	App J 2 yrs 3 mo 3 mo

Notes:

a) 1, 2 or 3 – ASME B&PV Code class per Section 3.2.

b) Valve actuators:

AO Air operated

EX Explosively actuated

NO Nitrogen operated

M Manually operated

MO Motor operated

PM Process Medium-actuated

SA Self-actuated

SO Solenoid operated

EH Electro-hydraulic operated

c) A, B, C or D – Valve category per ASME OM Code –Subsection ISTC-1300.

d) Valve Function:

A or P – Active or passive per ASME OM Code – Paragraph ISTC-1300.

e) Valve test parameters per ASME OM Code – Subsection ISTC and Appendix I:

L Seat leakage rate (Paragraph ISTC-3600 and Subsection 6.2.6.3)

P Valve position verification (Paragraph ISTC-3700)

R Safety and relief test including visual examination, set pressure determination and seat tightness testing in accordance with Appendix I of the ASME OM Code. Category A and B requirements for safety and relief valves of ISTC-3500 and ISTC-3700 are excluded per ISTC-1200.

SO Open stroke tests for Category A and B valves (Paragraph ISTC-3521) and Category C valves (Paragraph ISTC-3522)

SC Closure stroke tests for Category A and B valves (Paragraph ISTC-3521) and Category C valves (Paragraph ISTC-3522)

FO Fail open tests for Category A and B valves (Paragraph ISTC-3560)

FC Fail closed tests for Category A and B valves (Paragraph ISTC-3560)

X Explosively actuated valve tests (Paragraph ISTC-5260)

f) Valve test frequency for the specified test parameter including summary of exclusions and alternatives per ASME OM Code – Subsection ISTC and Appendix I:

CS Cold shutdown

RO Refueling outages. For position verification: refueling outages, but in no case greater than two years.

E2 Fired and replaced per Paragraph ISTC-5260.

App J Per 10 CFR 50 Appendix J requirements

g) Justifications for ASME OM Code-defined testing exceptions or alternatives as allowed by Paragraphs ISTC-3510 of the ASME OM Code for exercising tests and ISTC-3630 for seat leakage rate tests are as follows.

g1) Paragraph ISTC-3600 (leak testing requirements) is not applicable to these valves since they function in the course of plant operation in a manner that demonstrates functionally adequate seat leak-tightness.

g2) Although these valves could be tested one at a time at power, there is a risk of depressurizing the reactor.

g3) These valves cannot be tested at power because sufficient differential pressure/flow between the wetwell and the drywell cannot be created.

g4) These valves cannot be tested at power because a reverse flow cannot be established.

g5) These valves are installed in nitrogen supply lines to nitrogen-operated valves. If the main valve is tested quarterly, the opening function of the check valve will be tested as part of that test. Otherwise the check valve cannot be tested without potentially stroking the main valve. The closing function cannot be tested at power because a reverse flow cannot be established.

g6) These valves are installed in sensing lines. Valve opening is verified by the continued operation of the sensor. High flow cannot be established through these valves at power to verify valve closure.

g7) These valves cannot be tested for opening at power because of the potential for moving the control rods and cannot be tested for closing at power because a reverse flow cannot be established.

g8) There are squib valves in series with these valves; therefore, normal flow cannot be established through the line. Since the valves are inside containment, an alternate test method using test connections cannot be used.

g9) Valve opening is verified during normal plant operation. Valve closing cannot be verified without stopping feedwater flow in the train.

g10) These valves cannot be stroked without interrupting main steam flow.

g11) Normal flow through these valves cannot be established at power. Since the valves are inside containment, an alternate test method using test connections cannot be used.

g12) These valves cannot be tested at power without potentially operating an SRV.

g13) These valves cannot be tested at power without potentially operating an MSIV.

g14) There are squib valves in series with these valves; therefore, normal flow cannot be established through the line. There is a test connection upstream of the valves; however, using this connection to test at power would inject cold water into the reactor.

g15) Normal flow cannot be established without initiating Drywell Spray. Since the valves are inside containment, an alternate test method using test connections cannot be used.

g16) Normal flow cannot be established because RWCU/SDC system pressure exceeds FAPCS system pressure.

g17) (Deleted)

g18) (Deleted)

g19) Although these valves could be tested one-at-a-time during power operation, there is a risk of purging/venting the containment during this test.

g20) These valves cannot be tested at power without interrupting feedwater flow.

g21) Valve opening is verified during normal plant operation. Valve closing cannot be verified because a reverse flow cannot be established.

h) General Note on Check Valves: To satisfy the requirement for position verification of the ASME OM Code Paragraph ISTC-3700 for check valves, where local observation is not possible, other indications are used for verification of valve operation.

i) Valve Types (See Table 6.2-15 for a more detailed description of valve types):

GT Gate valve

GB Globe valve

QBL Quarter-turn ball valve

QBF Quarter-turn butterfly valve

CK Check valve

RV Safety and Relief valve

SQ Squib valve

VB Vacuum breaker

[*Table 3.9-9*

Load Combinations and Acceptance Criteria for Class 1 Piping Systems

Condition	*Load Combination for all terms*(1) (2)(3)	*Acceptance Criteria*
Design	*PD + WT*	*Eq 9 ≤ 1.5 S_m NB-3652*
Service Level A & B	*PP, TE, ΔT1, ΔT2 , TA-TB, RV_1, RV_2I, RV_2D, TSV, SSEI, SSED*	*Eq 12 & 13 ≤ 2.4 S_m* *Fatigue - NB-3653:* *U < 0.40*(4)
Service Level B	*PP + WT + (TSV)* *PP + WT + (RV_1)* *PP + WT + (RV_2I)*	*Eq 9 ≤ 1.8 S_m, but not greater than 1.5 S_y* *Pressure not to exceed 1.1P_a (NB-3654)*
Service Level C	*PP + WT + $[(CHUGI)^2 + (RV_1)^2]^{1/2}$* *PP + WT + $[(CHUGI)^2 + (RV_2I)^2]^{1/2}$*	*Eq 9 ≤2.25 S_m, but not greater than 1.8 S_y* *Pressure not to exceed 1.5 P_a (NB-3655)*
Service Level D	*PP + WT + $[(SSEI)^2 + (TSV)^2]^{1/2}$* *PP + WT + $[(SSEI)^2 + (CHUGI)^2 + (RV_1)^2]^{1/2}$* *PP + WT + $[(SSEI)^2 + (CHUGI)^2 + (RV_2I)^2]^{1/2}$* *PP + WT + $[(SSEI)^2 + (CONDI)^2 + (RV_1)^2]^{1/2}$* *PP + WT + $[(SSEI)^2 + (CONDI)^2 + (RV_2I)^2]^{1/2}$* *PP + WT + $[(SSEI)^2 + (API)^2]^{1/2}$*	*Eq 9 ≤ 3.0 S_m but not greater than 2.0 S_y* *Pressure not to exceed 2.0 P_a (NB-3656)*

(1) RV1 and TSV loads are used for MS Lines only

(2) RV2 represents RV2 ALL (all valves), RV2SV (single Valve) and RV2 AD (Automatic Depressurization operation)

(3) For the SRV discharge piping, all direct loads for SRV and LOCA loads are evaluated for submerged piping.

(4) In conjunction with compliance with RG 1.207, the fatigue usage limit of ≤ 0.40 will be used as the criteria for piping locations exempt from pipe break consideration.

Where: *API = Annulus Pressurization Loads (Inertia Effect)*

CHUGI = Chugging Load (Inertia Effect)

CONDI = Condensation Oscillation (Inertia Effect)

PD = Design Pressure

PP = Peak Pressure or the Operating Pressure Associated with that transient

RV_1 = SRV Opening Loads (Acoustic Wave)]*

* Text sections that are bracketed and italicized with an asterisk following the brackets are designated as Tier 2*. Prior NRC approval is required to change.

[*Table 3.9-10*

Snubber Loads

Condition	*Load Combination*[(1)(2)]	*Acceptance Criteria*
Service Level B	*(TSV)* (RV_1) $[(RV_2I)^2 + (RV_2D)^2]^{1/2}$	*Vendor Load Capacity Datasheet (LCD) or Vendor Design Report Summary (DRS)*
Service Level C	$[(CHUGI)^2 + (CHUGD)^2 + (RV_1)^2]^{1/2}$ $[(CHUGI)^2 + (CHUGD)^2 + (RV_2I)^2 + (RV_2D)^2]^{1/2}$	*Vendor Load Capacity Datasheet (LCD) or Vendor Design Report Summary (DRS)*
Service Level D	$[(SSEI)^2 + (SSED)^2 + (TSV)^2]^{1/2}$ $[(SSEI)^2 + (SSED)^2 + (CHUGI)^2 + (CHUGD)^2 + (RV_1)^2]^{1/2}$ $[(SSEI)^2 + (SSED)^2 + (CHUGI)^2 + (CHUGD)^2 + (RV_2I)^2 + (RV_2D)^2]^{1/2}$ $[(SSEI)^2 + (SSED)^2 + (CONDI)^2 + (CONDD)^2 + (RV_1)^2]^{1/2}$ $[(SSEI)^2 + (SSED)^2 + (CONDI)^2 + (CONDD)^2 + (RV_2I)^2 + (RV_2D)^2]^{1/2}$ $[(SSEI)^2 + (SSED)^2 + (API)^2 + (APD)^2]^{1/2}$	*Vendor Load Capacity Datasheet (LCD) or Vendor Design Report Summary (DRS)*

(1) RV_1 and TSV loads are used for MS Lines

(2) RV_2 represents RV_2 ALL (all valves), RV_2SV (single valve) and RV_2 AD (Automatic Depressurization Operation).

Where: *TSV = Turbine Stop Valve closure loads*

RV_1 = SRV Opening Loads (Acoustic Wave)

RV_2I = SRV Building Acceleration Loads (Inertia Effect) (all valves)

RV_2D = SRV Building Acceleration Loads (Anchor Displacement Loads) (all valves)

CHUGI = Chugging Load (Inertia Effect)

CHUGD = Condensation Oscillation (Anchor Displacement Loads)

SSEI = Safe Shutdown Earthquake (Inertia Effect)

SSED = Safe Shutdown Earthquake (Anchor Displacement Loads)

CONDI = Condensation Oscillation (Inertia Effect)

CONDD = Condensation Oscillation (Anchor Displacement Loads)

API = Annulus Pressurization Loads (Inertia Effect)

APD = Annulus Pressurization Loads (Anchor Displacement Loads)]*

* Text sections that are bracketed and italicized with an asterisk following the brackets are designated as Tier 2*. Prior NRC approval is required to change.

[*Table 3.9-11*

Strut Loads

Condition	*Load Combination*[(1)(2)(3)]	*Acceptance Criteria*
Service Level A	$WT + TE$	*Vendor Load Capacity Datasheet (LCD) or Vendor Design Report Summary (DRS)*
Service Level B	$WT + TE + (TSV)$ $WT + TE + (RV_1)$ $WT + TE + [(RV_2I)^2 + (RV_2D)^2]^{1/2}$	*Vendor Load Capacity Datasheet (LCD) or Vendor Design Report Summary (DRS)*
Service Level C	$WT + TE + [(CHUGI)^2 + (CHUGD)^2 + (RV_1)^2]^{1/2}$ $WT + TE + [(CHUGI)^2 + (CHUGD)^2 + (RV_2I)^2 + (RV_2D)^2]^{1/2}$	*Vendor Load Capacity Datasheet (LCD) or Vendor Design Report Summary (DRS)*
Service Level D	$WT + TE + [(SSEI)^2 + (SSED)^2 + (TSV)^2]^{1/2}$ $WT + TE + [(SSEI)^2 + (SSED)^2 + (CHUGI)^2 + (CHUGD)^2 + (RV_1)^2]^{1/2}$ $WT + TE + [(SSEI)^2 + (SSED)^2 + (CHUGI)^2 + (CHUGD)^2 + (RV_2I)^2 + (RV_2D)^2]^{1/2}$ $WT + TE + [(SSEI)^2 + (SSED)^2 + (CONDI)^2 + (CONDD)^2 + (RV_1)^2]^{1/2}$ $WT + TE + [(SSEI)^2 + (SSED)^2 + (CONDI)^2 + (CONDD)^2 + (RV_2I)^2 + (RV_2D)^2]^{1/2}$ $WT + TE + [(SSEI)^2 + (SSED)^2 + (API)^2 + (APD)^2]^{1/2}$	*Vendor Load Capacity Datasheet (LCD) or Vendor Design Report Summary (DRS)*

(1) RV_1 and TSV loads are used for MS Lines

(2) RV_2 represents RV_2 ALL (all valves), RV_2SV (single valve) and RV_2 AD (Automatic Depressurization Operation)

(3) TE = Thermal expansion case associated with the transient

Where: *TSV = Turbine Stop Valve closure loads*
WT = Dead Weight
TE = Thermal Expansion
RV_1 = SRV Opening Loads (Acoustic Wave)
RV_2I = SRV Building Acceleration Loads (Inertia Effect) (all valves)
RV_2D = SRV Building Acceleration Loads (Anchor Displacement Loads) (all valves)
CHUGI = Chugging Load (Inertia Effect)
CHUGD = Condensation Oscillation (Anchor Displacement Loads)
SSEI = Safe Shutdown Earthquake (Inertia Effect)
SSED = Safe Shutdown Earthquake (Anchor Displacement Loads)
CONDI = Condensation Oscillation (Inertia Effect)
CONDD = Condensation Oscillation (Anchor Displacement Loads)
API = Annulus Pressurization Loads (Inertia Effect)
APD = Annulus Pressurization Loads (Anchor Displacement Loads)]*

* Text sections that are bracketed and italicized with an asterisk following the brackets are designated as Tier 2*. Prior NRC approval is required to change.

[*Table 3.9-12*

Linear Type (Anchor and Guide) Main Steam Piping Support

Condition	*Load Combination*(1)(2)(3)	*Acceptance Criteria*(4)(5)
Service Level A	$WT + TE$	*Table NF-3131(a)-1 for Linear Supports*
Service Level B	$WT + TE + (TSV)$ $WT + TE + (RV_1)$ $WT + TE + [(RV_2I)^2 + (RV_2D)^2]^{1/2}$	*Table NF-3131(a)-1 for Linear Supports*
Service Level C	$WT + TE + [(CHUGI)^2 + (CHUGD)^2 + (RV_1)^2]^{1/2}$ $WT + TE + [(CHUGI)^2 + (CHUGD)^2 + (RV_2I)^2 + (RV_2D)^2]^{1/2}$	*Table NF-3131(a)-1 for Linear Supports*
Service Level D	$WT + TE + [(SSEI)^2 + (SSED)^2 + (TSV)^2]^{1/2}$ $WT + TE + [(SSEI)^2 + (SSED)^2 + (CHUGI)^2 + (CHUGD)^2 + (RV_1)^2]^{1/2}$ $WT + TE + [(SSEI)^2 + (SSED)^2 + (CHUGI)^2 + (CHUGD)^2 + (RV_2I)^2 + (RV_2D)^2]^{1/2}$ $WT + TE + [(SSEI)^2 + (SSED)^2 + (CONDI)^2 + (CONDD)^2 + (RV_1)^2]^{1/2}$ $WT + TE + [(SSEI)^2 + (SSED)^2 + (CONDI)^2 + (CONDD)^2 + (RV_2I)^2 + (RV_2D)^2]^{1/2}$ $WT + TE + [(SSEI)^2 + (SSED)^2 + (API)^2 + (APD)^2]^{1/2}$	*Appendix F Subarticle F-1334*

(1) RV_1 and TSV loads are used for MS Lines

(2) RV_2 represents RV_2 ALL (all valves), RV_2SV (single valve) and RV_2 AD (Automatic Depressurization Operation)

(3) TE = Thermal expansion case associated with the transient

(4) See Subsection 3.7.3.3.1 pertaining to the weight of the frame.

(5) See Subsection 3.9.3.7.1 regarding friction forces induced by thermal in unrestrained direction.

Where: *TSV = Turbine Stop Valve closure loads*
WT = Dead Weight
TE = Thermal Expansion
RV_1 = SRV Opening Loads (Acoustic Wave)
RV_2I = SRV Building Acceleration Loads (Inertia Effect) (all valves)
RV_2D = SRV Building Acceleration Loads (Anchor Displacement Loads) (all valves)
CHUGI = Chugging Load (Inertia Effect)
CHUGD = Condensation Oscillation (Anchor Displacement Loads)
SSEI = Safe Shutdown Earthquake (Inertia Effect)
SSED = Safe Shutdown Earthquake (Anchor Displacement Loads)
CONDI = Condensation Oscillation (Inertia Effect)
CONDD = Condensation Oscillation (Anchor Displacement Loads)
API = Annulus Pressurization Loads (Inertia Effect)
APD = Annulus Pressurization Loads (Anchor Displacement Loads)]*

* Text sections that are bracketed and italicized with an asterisk following the brackets are designated as Tier 2*. Prior NRC approval is required to change.

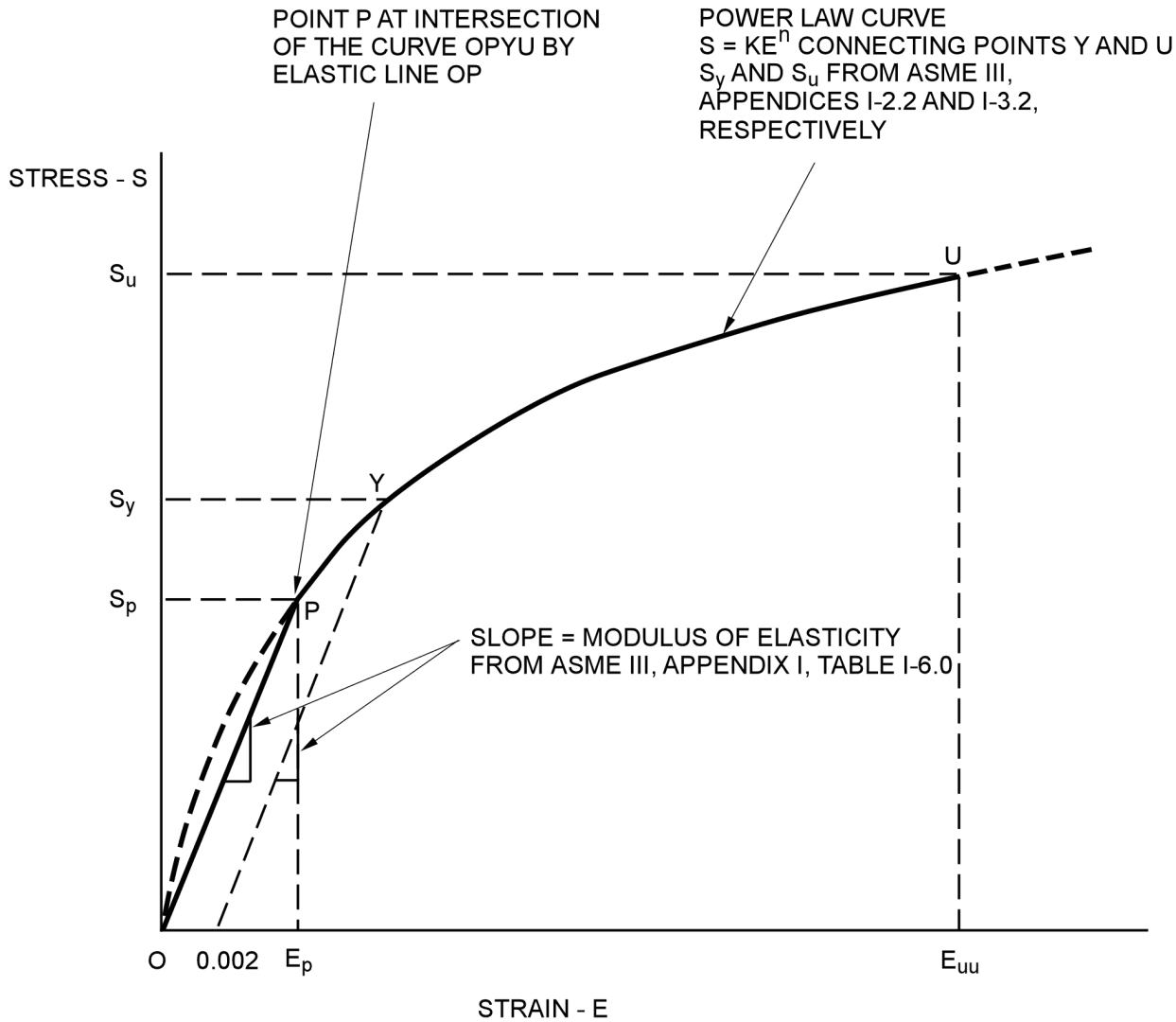

Figure 3.9-1. Stress-Strain Curve for Blowout Restraints

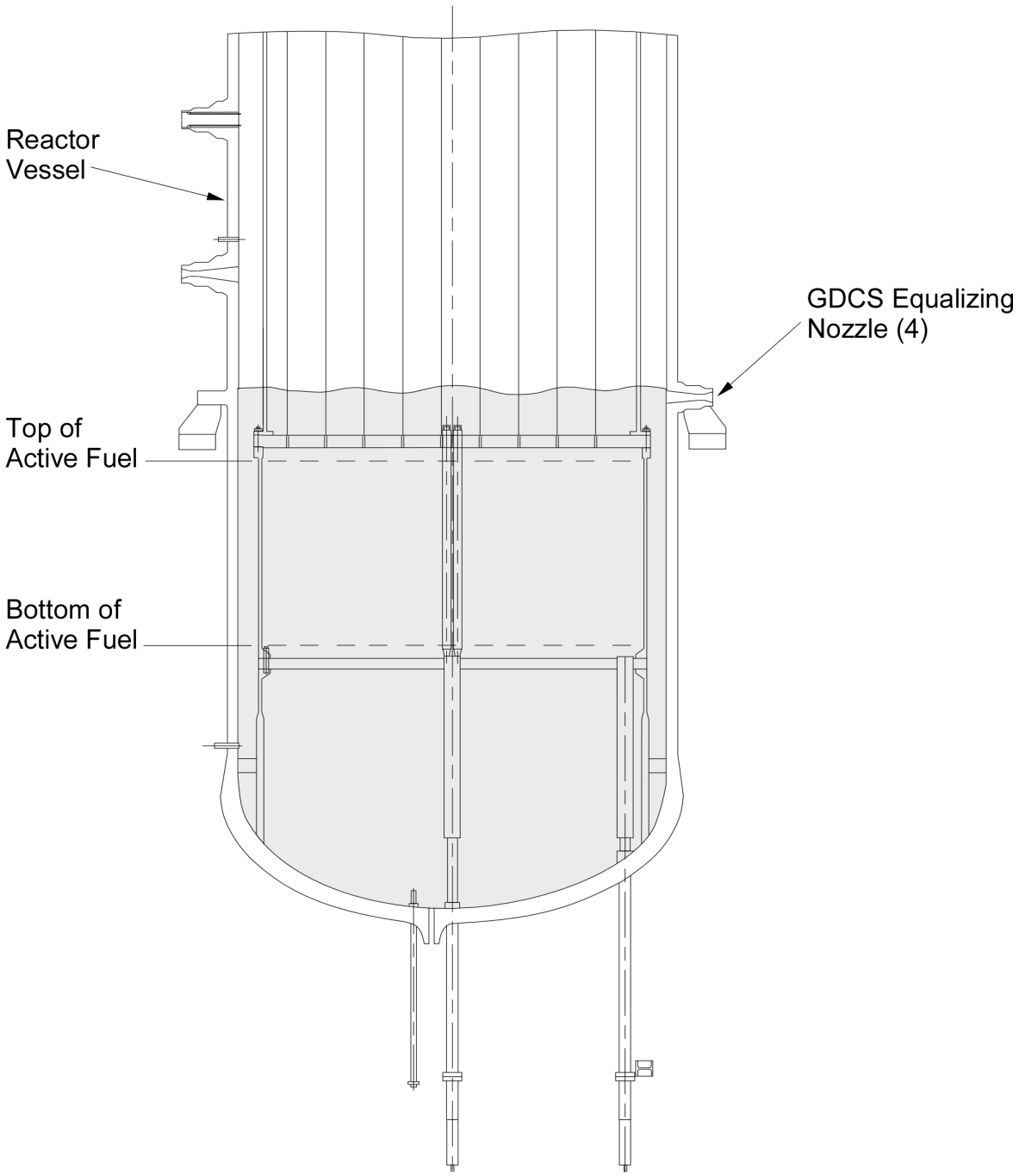

Figure 3.9-2. Minimum Floodable Volume

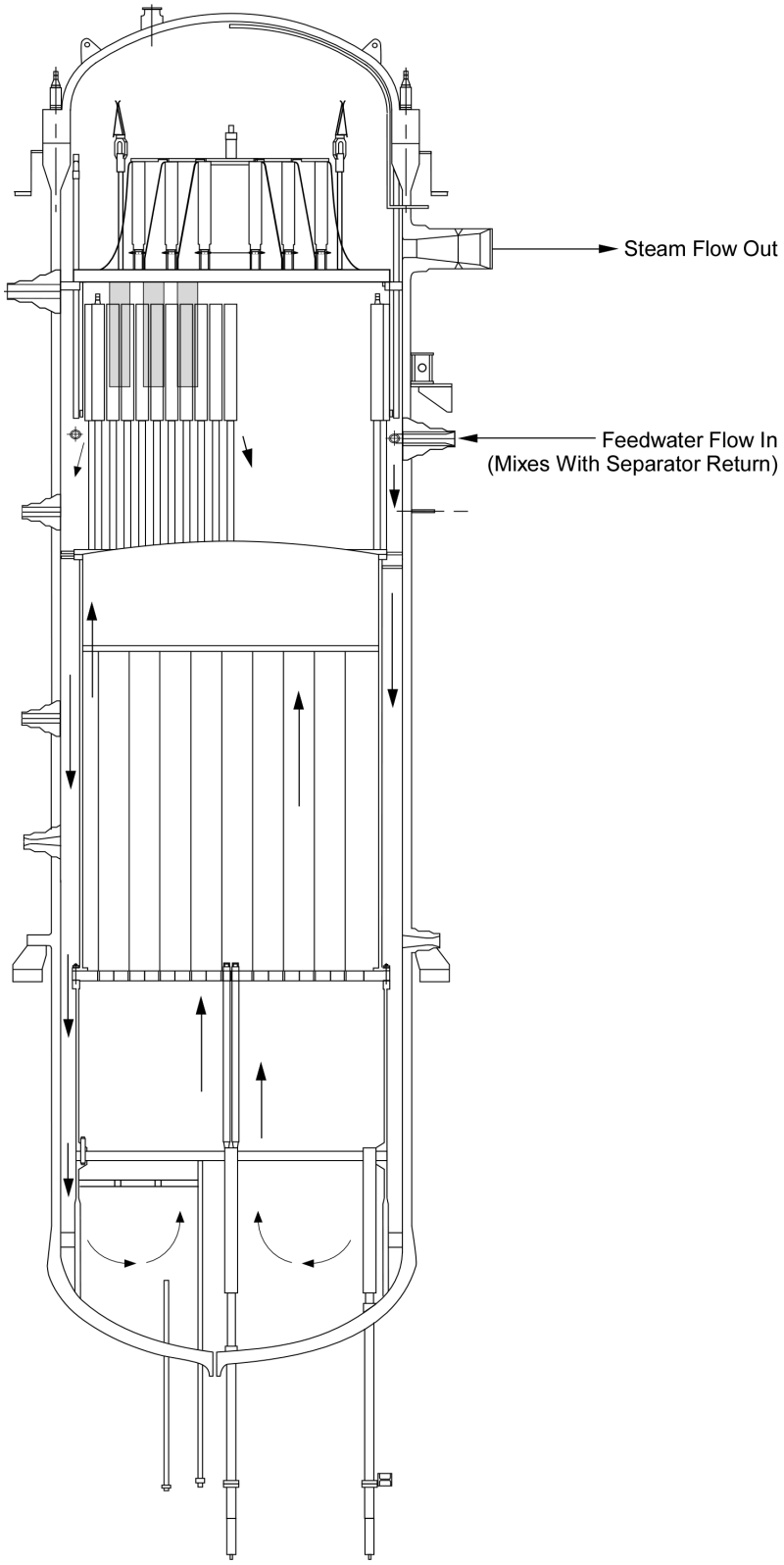

Figure 3.9-3. Recirculation Flow Path

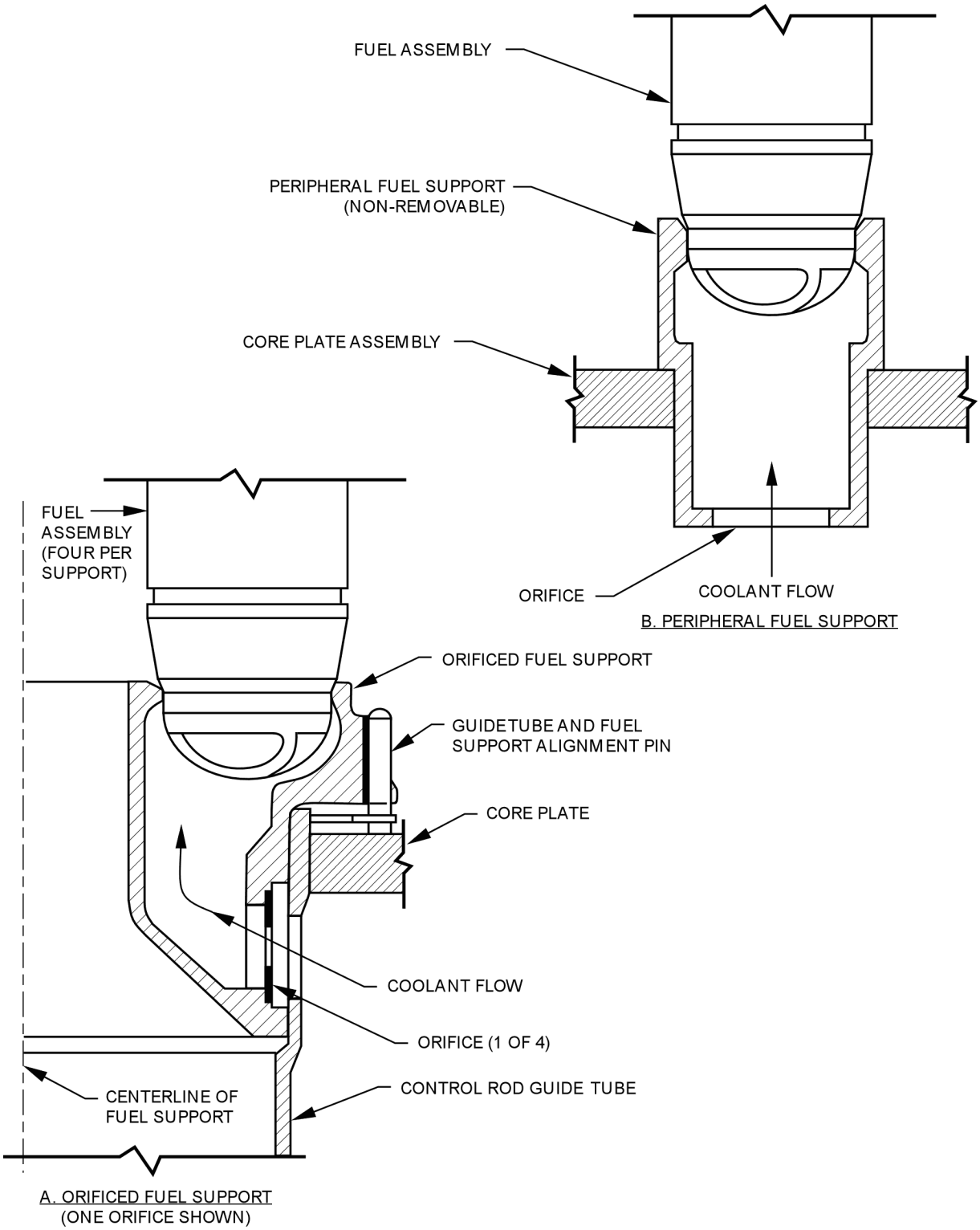

Figure 3.9-4. Fuel Support Pieces

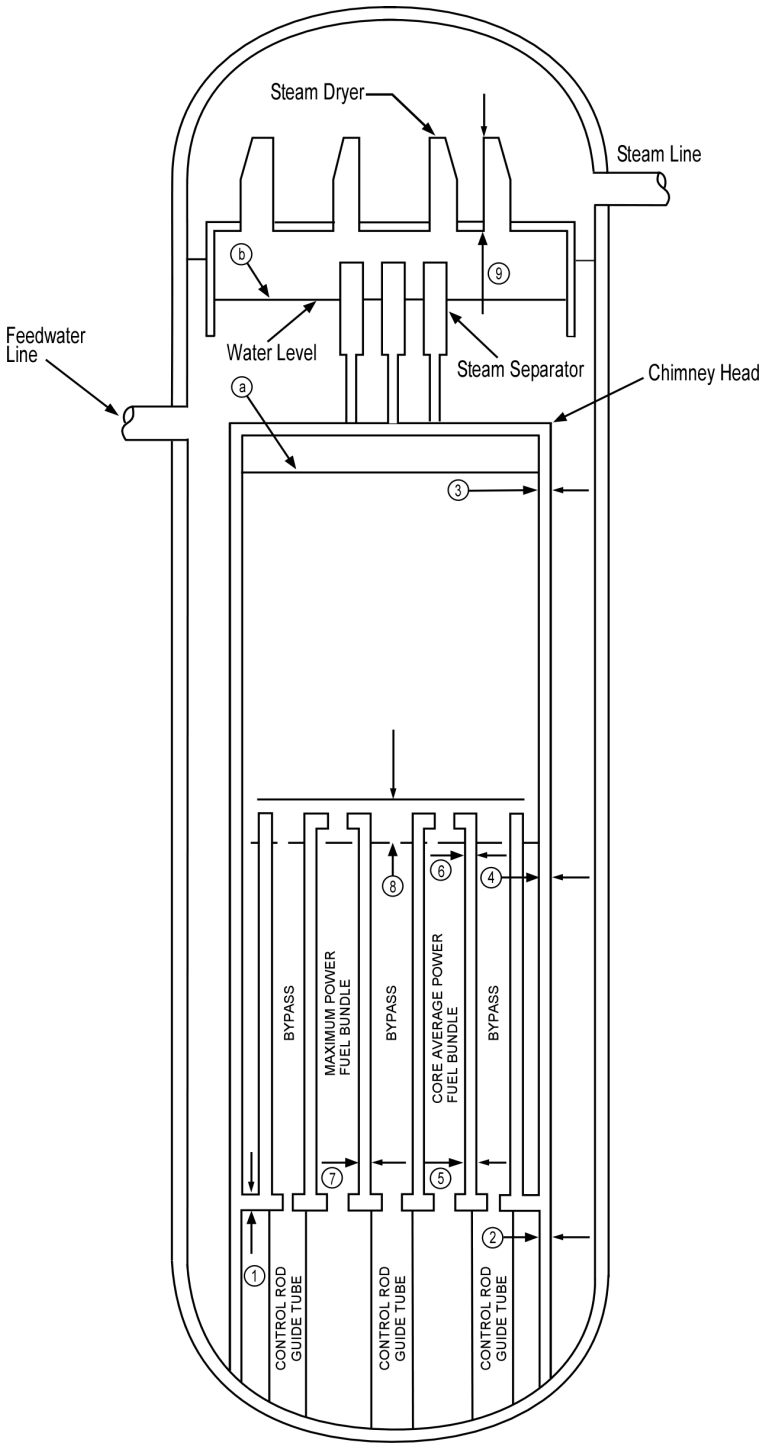

Figure 3.9-5. Pressure Nodes for Depressurization Analysis

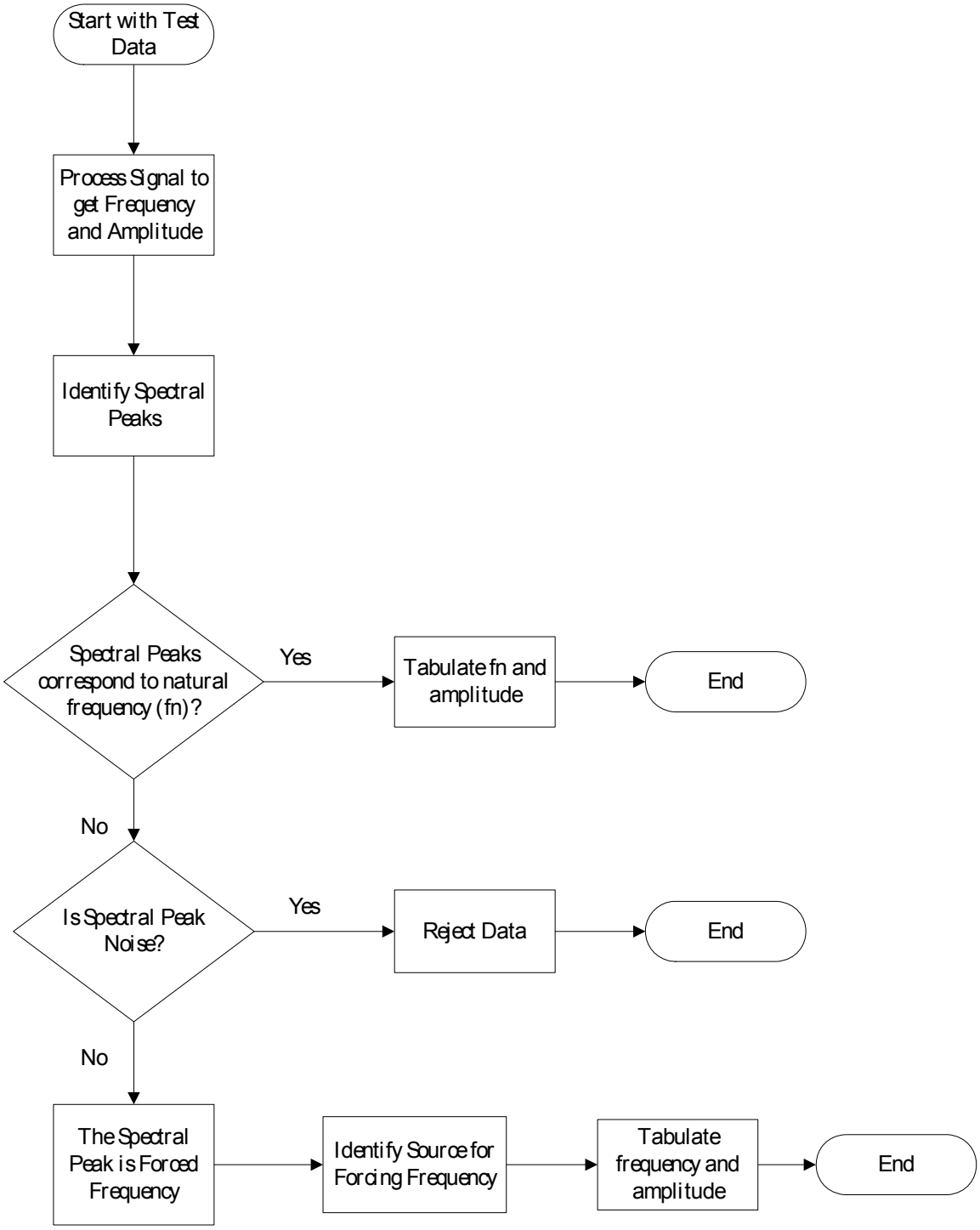

Figure 3.9-6. Flow Chart for Determining Test Data Frequency and Amplitude

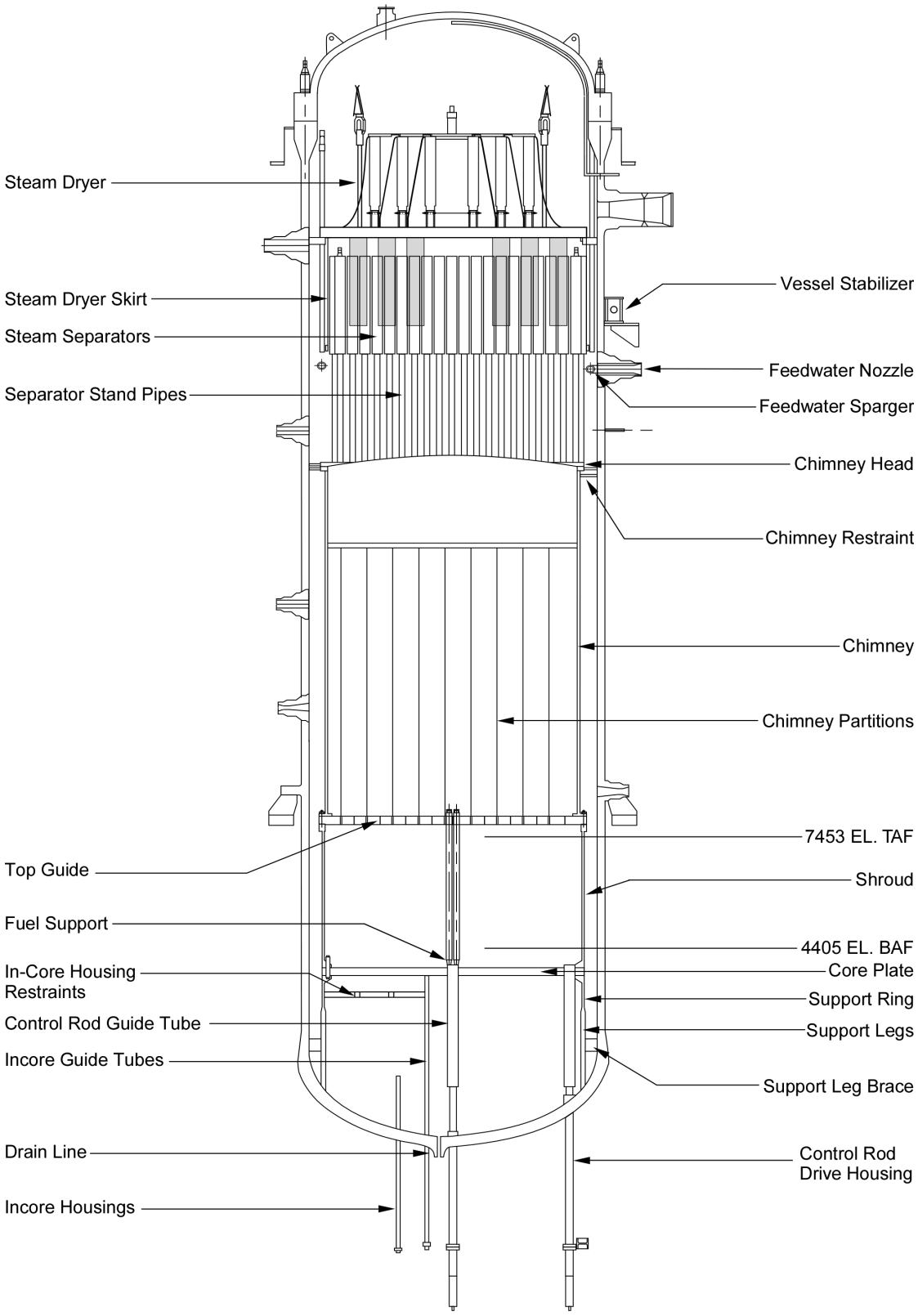

Figure 3.9-7. ESBWR Reactor Assembly Showing Reactor Internal Components

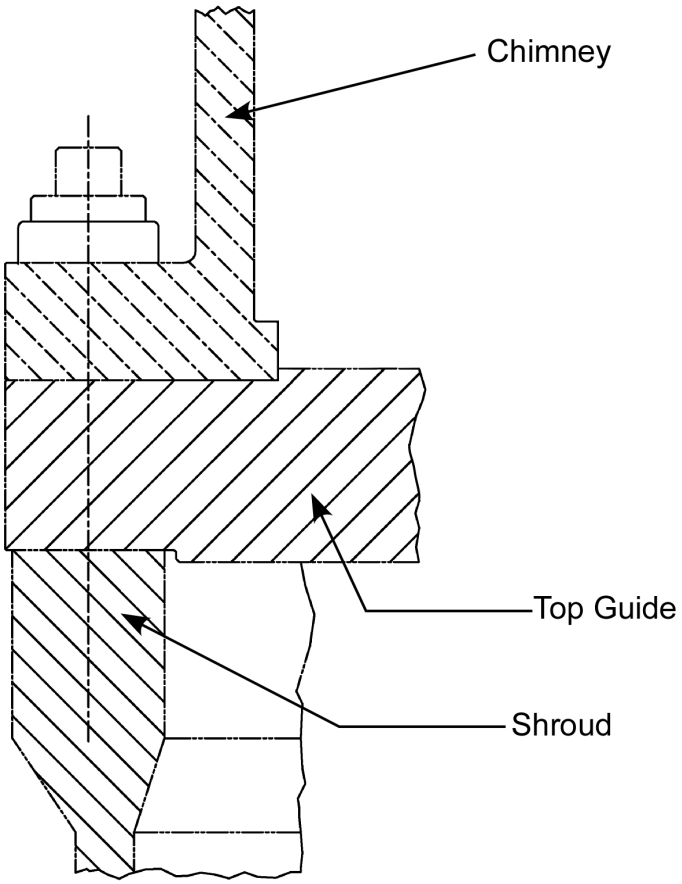

Figure 3.9-8. Typical Shroud, Chimney, and Top Guide Assembly

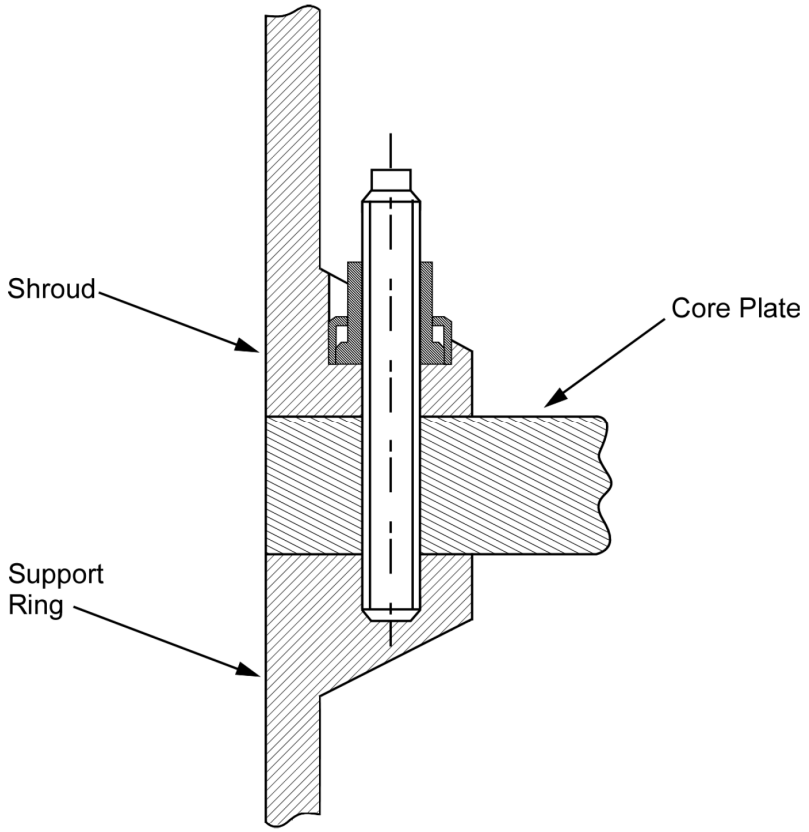

Figure 3.9-9. Typical Core Plate to Shroud Connection

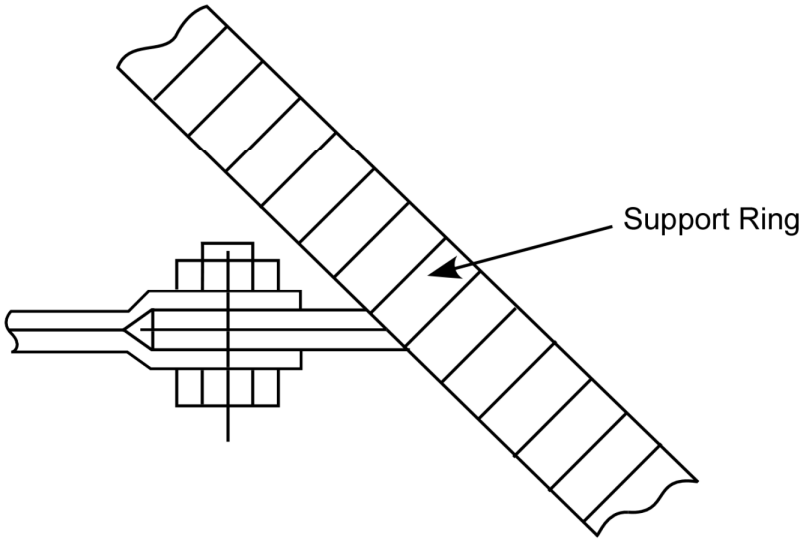

Figure 3.9-10. Typical In-core Guide Tube Lateral Support Connection to Support Ring

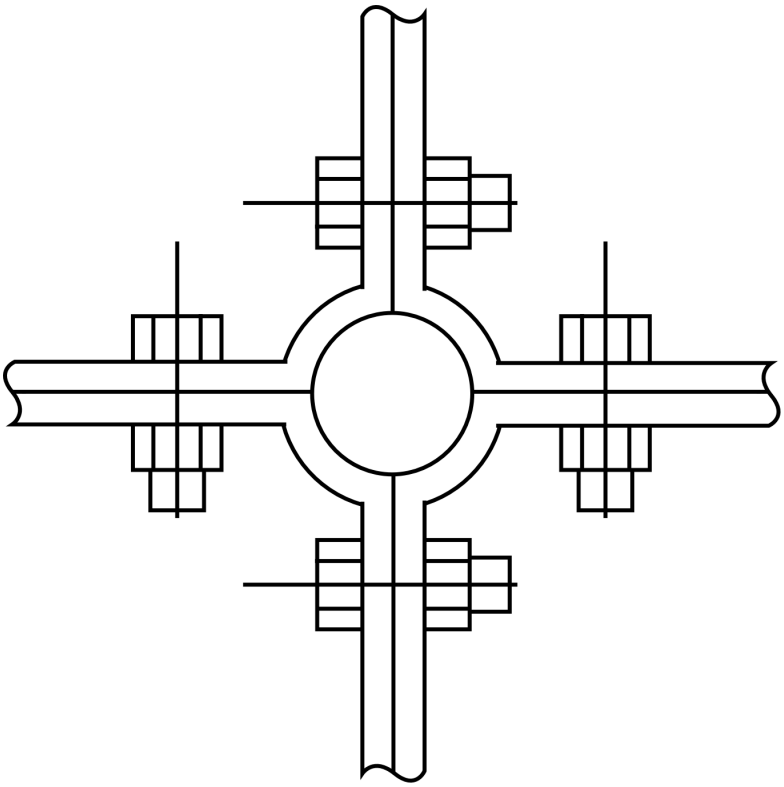

Figure 3.9-11. Typical Inter-Connection Between In-core Guide Tube Lateral Supports

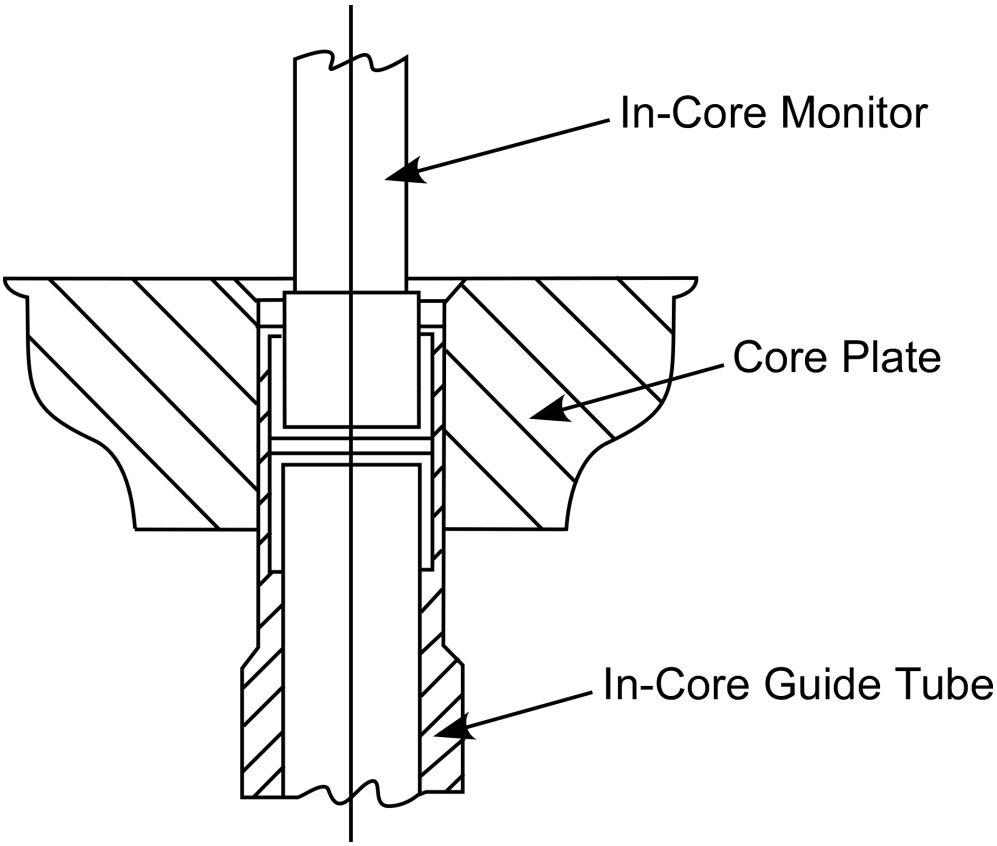

Figure 3.9-12. Typical Connection Between In-Core Guide Tube and Core Plate

3.10 SEISMIC AND DYNAMIC QUALIFICATION OF MECHANICAL AND ELECTRICAL EQUIPMENT

This section addresses methods of test and analysis employed to ensure the operability of mechanical and electrical equipment (includes instrumentation and control) under the full range of normal and accident loadings (including seismic), to ensure conformance with the requirements of General Design Criteria 1, 2, 4, 14 and 30 of Appendix A to 10 CFR 50, as well as Appendix B to 10 CFR Part 50, as discussed in SRP 3.10 Draft Revision 3 (Reference 3.10-1) and Appendix S to 10 CFR 50. Mechanical and electrical equipment are designed to withstand the effects of earthquakes, i.e., seismic Category I requirements, and other accident-related loadings. Mechanical and electrical equipment covered by this section include equipment associated with systems that are essential to emergency reactor shutdown, containment isolation, reactor core cooling, and containment and reactor heat removal, or otherwise are essential in preventing significant release of radioactive material to the environment. Also covered by this section is equipment (1) that performs the above functions automatically, (2) that is used by the operators to perform these functions manually, and (3) whose failure can prevent the satisfactory accomplishment of one or more of the above safety-related functions. Instrumentation that is needed to assess plant and environs conditions during and after an accident, as described in Regulatory Guide (RG) 1.97, is also covered by this section. Examples of mechanical equipment included in these systems are pumps, valves, fans, valve operators, battery and instrument racks, control consoles, cabinets, and panels. Examples of electrical equipment are valve operator motors, solenoid valves, pressure switches, level transmitters, electrical penetrations, and pump and fan motors.

The methods of test and analysis employed to ensure the operability of mechanical and electrical equipment meet the relevant requirements of the following regulations, industry codes and standards and Regulatory Guides:

(1) Code Federal Regulations (CFR):

a. 10 CFR 50 Appendix A, “General Design Criteria for Nuclear Power Plants,” (Criteria 1, 2, 4, 14 and 30).

b. 10 CFR 50 Appendix B, “Quality Assurance Criteria for Nuclear Power Plants and Fuel Reprocessing Plants.”

c. 10 CFR 50 Appendix S, “Earthquake Engineering Criteria for Nuclear Power Plants.”

(2) Institute of Electrical and Electronics Engineers (IEEE):

a. IEEE-323-1974, “Standard for Qualifying Class 1E Equipment for Nuclear Power Generating Stations.”

b. IEEE-382-1996 (R2004), “Standard for Qualification of Actuators for Power-Operated Valve Assemblies with Safety-Related Functions for Nuclear Power Plants.”

c. IEEE-344-1987 (R1993), “Recommended Practice for Seismic Qualification of Class 1E Equipment for Nuclear Power Generating Stations.”

(3) American Society of Mechanical Engineers (ASME):

a. ASME Boiler and Pressure Vessel (B&PV) Code Section III, "Rules for Construction of Nuclear Facility Components."

b. ASME NQA-1-1983, Addenda NQA-1a-1983, "Quality Assurance Requirements for Nuclear Facility Applications."

c. ASME B&PV Code Section III, Division 1, Subsection NF, "Rules for Construction of Nuclear Facility Components."

(4) U.S. Nuclear Regulatory Commission (NRC) Regulatory Guides:

a. Regulatory Guide 1.63-1987, "Electric Penetration Assemblies in Containment Structures for Nuclear Power Plants."

b. Regulatory Guide 1.122-1978, "Development of Floor Design Response Spectra for Seismic Design of Floor–Supported Equipment or Components."

c. Regulatory Guide 1.61-1973, "Damping Values for Seismic Design of Nuclear Power Plants."

d. Regulatory Guide 1.92 – 2006, "Combining Modal Responses and Spatial Components in Seismic Response Analysis."

e. Regulatory Guide 1.29-1978, "Seismic Design Classification."

f. Regulatory Guide 1.100-1988, "Seismic Qualification of Electrical and Mechanical Equipment for Nuclear Power Plants."

The dynamic loads may occur because of the Reactor Building Vibration (RBV) excited by the suppression pool dynamics when a loss-of-coolant-accident, a safety relief valve discharge or a depressurization valve discharge occurs. The non-seismic RBV dynamic loads are described in Tables 3.9-1 and 3.9-2 and can be categorized as Service Level B, C, or D depending upon the excitation source.

Principal Seismic Category I structures, systems and components are identified in Table 3.2-1. Most of these items are safety-related as explained in Subsection 3.2.1. The safety-related functions are defined in Section 3.2, and include the functions essential to emergency reactor shutdown, containment isolation, reactor core cooling, reactor protection, containment and reactor heat removal, and emergency power supply, or otherwise are essential in preventing significant release of radioactive material to the environment.

The mechanical components and equipment and the electrical components that are integral to the mechanical equipment are dynamically qualified as described in Section 3.9. Seismic and dynamic qualification methodology in Section 4.4 of GE's Environmental Qualification (EQ) Program (Reference 3.10-2) applies to mechanical as well as electrical equipment.

3.10.1 Seismic and Dynamic Qualification Criteria

3.10.1.1 Selection of Qualification Method

[*The qualification of Seismic Category I mechanical and electrical equipment is accomplished by test, analysis, or a combination of testing and analysis. Qualification by actual seismic experience as permitted by IEEE 344-1987, is not utilized.*]*

In general, analysis is used to supplement test data although simple components may lend themselves to dynamic analysis in lieu of full scale testing. The deciding factors for choosing between tests or analysis include:

- Magnitude and frequency of seismic and RBV dynamic loadings;
- Environmental conditions (Appendix 3H) associated with the dynamic loadings;
- Nature of the safety-related function(s);
- Size and complexity of the equipment;
- Dynamic characteristics of expected failure modes (structural or functional); and
- Partial test data upon which to base the analysis.

The selection of qualification method to be used is largely a matter of engineering judgment; however, tests or analyses of assemblies are preferable to tests or analyses on separate components (e.g., a motor and a pump, including the coupling and other appurtenances, should be tested or analyzed as an assembly).

* Text sections that are bracketed and italicized with an asterisk following the brackets are designated as Tier 2*. Prior NRC approval is required to change.

3.10.1.2 Input Motion

The input motion for the qualification of equipment and supports is defined by response spectra. The Required Response Spectra (RRS) are generated from the building dynamic analysis, as described in Section 3.7. They are grouped by buildings and by elevations. This RRS definition incorporates the contribution of RBV dynamic loads as specified by the load combinations in Tables 3.9-1 and 3.9-2. When one type of equipment is located at several elevations or in several buildings, the governing response spectra are specified.

3.10.1.3 Dynamic Qualification Program

The dynamic qualification program is described in Section 4.4 of GEH's EQ Program (Reference 3.10-2). The program conforms to the requirements of IEEE 323-1974 as modified and endorsed by the RG 1.89, and meets the criteria contained in IEEE 344-1987 as modified and endorsed by RG 1.100.

3.10.1.4 Dynamic Qualification Report

The Dynamic Qualification Report (DQR) identifies all Seismic Category I electrical and mechanical equipment and their supports. The DQR contains the following:

- A table or file for each system that is identified in Table 3.2-1 to be safety-related or having Seismic Category I equipment, shall be included in the DQR containing the Material Parts List item number and name, the qualification method, the input motion, the supporting structure of the equipment, and the corresponding qualification summary table or vendor's qualification report.
- The mode of safety-related operation (i.e., active, manual active or passive) of the equipment along with the manufacturer identification and model numbers shall also be tabulated in the DQR. The operational mode identifies the instrumentation, device, or equipment:
  - That performs the safety-related functions automatically;
  - That is used by the operators to perform the safety-related functions manually; or
  - Whose failure can prevent the satisfactory accomplishment of one or more safety-related functions.

The COL Applicant will provide a milestone for completing the DQR (refer to Subsection 3.10.4, Item 3.10.4-1-A).

3.10.2 Methods and Procedures for Qualifying Mechanical and Electrical Equipment

The following subsections describe the methods and procedures incorporated in the above mentioned dynamic qualification program. Described here are the general methods and procedures for qualifying by testing, analysis, or combined testing and analysis, the Seismic Category I mechanical and electrical equipment for operability during and after the safe shutdown earthquake (SSE) loads and Service Level D RBV dynamic loads and for continued structural and functional integrity of the equipment after low level earthquake loading of lesser magnitude (Section 3.7) and Service Level B RBV dynamic loads.

3.10.2.1 Qualification by Testing

The testing methodology includes the hardware interface requirements and the test methods.

Interface Requirements

Intervening structures or components (such as interconnecting cables, bus ducts, conduits) that serve as interfaces between the equipment to be qualified and that is supplied by others are not qualified as part of this program. However, the effects of interfacing are taken into consideration. When applicable, accelerations and frequency content at locations of interfaces with interconnecting cables, bus ducts, conduits, etc., are determined and documented in the test report. This information is specified in the form of interface criteria.

To minimize the effects of interfaces on the equipment, standard configurations using bottom cable entry are utilized whenever possible. Where non-rigid interfaces are located at the equipment support top, equipment qualification is based on the top entry requirements. A report including equipment support outline drawings is furnished specifying the equipment maximum displacement due to the SSE loads including appropriate RBV dynamic loads. Embedment loads and mounting requirements for the equipment supports are also specified in this manner.

Test Methods

The test method is biaxial, random single- or multi-frequency excitation to envelop generic RRS levels in accordance with Section 7 of IEEE 344-1987. Past testing demonstrates that Seismic Category I electrical equipment has critical damping ratios equal to or less than 5%. Hence, RRS at 5% or less critical damping ratio are developed as input to the equipment base.

Biaxial testing applies input motions to both the vertical and one horizontal axes simultaneously. Independent random inputs are preferred and, when used, the test is performed in two steps with equipment rotated 90 degrees in the horizontal plane in the second step.

When independent random tests are not available, four tests are performed:

(1) With the inputs in phase;

(2) With one input 180 degrees out of phase;

(3) With the equipment rotated 90 degrees horizontally and the inputs in phase; and

(4) With the same orientation as in the step (3) but with one input 180 degrees out of phase.

Selection of Test Specimen — Representative samples of equipment and supports are selected for use as test specimens. Variations in the configuration of the equipment are analyzed with supporting test data. For example, these variations may include mass distributions that differ from one cabinet to another. From test or analysis, it is determined which mass distribution results in the maximum acceleration or frequency content, and this worst-case configuration is used as the test specimen. The test report includes a justification that this configuration envelops all other equipment configurations.

Mounting of Test Specimen — The test specimen is mounted to the test table so that inservice mounting, including interfaces, is simulated.

For interfaces that cannot be simulated on the test table, the accelerations and any resonances at such interface locations are recorded during the equipment test and documented in the test report.

Dynamic Testing Sequence

The test sequence includes vibration conditioning, exploratory resonance search, low level earthquake loading including Service Level B RBV dynamic loads, and the SSE loading including Service Level D RBV dynamic loads.

Vibration Conditioning — If required by the applicable qualification standard for the equipment, vibration conditioning is performed at this point in the sequence and the vibration conditioning details are given.

Exploratory Tests — Exploratory tests are sine-sweep tests to determine resonant frequency and transmission factors at locations of Seismic Category I devices in the instrument panel. The exploratory tests are run at an acceleration level of 0.2 g, which is intended to excite all modes between 1 and 60 Hz and at a sweep rate of 2 octaves per minute or less. This acceleration level is chosen to provide a usable signal-to-noise ratio for the sensing equipment to allow accurate detection of natural test frequencies of the test specimens. These tests are run for one axis at a time in three mutually perpendicular major axes corresponding to the side-to-side, front-to-back, and vertical directions.

Testing for Low Level Earthquake Loading and RBV Dynamic Loads — This test is performed on all test specimens. This test is conducted to demonstrate that the low level earthquake (as defined in Section 3.7) loads combined with Service Level B RBV dynamic loads do not degrade the continued structural and functional integrity of the equipment. Strong motion test inputs are applied for a minimum of 15 seconds in each orientation. Operability of equipment is verified as described below.

Testing for SSE Loading and RBV Dynamic Loads — An SSE test including other appropriate Service Level D RBV dynamic loads is performed on all test specimens. This test is conducted to demonstrate that equipment would perform its safety-related function through a SSE (as defined in Section 3.7) combined with Service Level D RBV dynamic loads. The strong motion of the test lasts a minimum of 15 seconds in each orientation. Operability of equipment is verified as described in the next subsection.

Qualification for Operability — In general, analyses are only used to supplement the operability test data. However, analyses, without testing, are used as a basis for demonstration of functional capability, if the necessary functional operability of the instrumentation or equipment is assured by its structural integrity alone.

Equipment is tested in an operational condition. Most Seismic Category I mechanical and electrical equipment have safety-related function requirements before, during, and after seismic events. Other equipment (such as plant status display equipment) have requirements only before and after seismic events. All equipment is operated at appropriate times to demonstrate the ability to perform its safety-related function.

If a malfunction is experienced during any test, the effects of the malfunction are determined and documented in the final test report.

Equipment that has been previously qualified by means of tests and analyses equivalent to those described in this section is acceptable provided proper documentation of such tests and analyses is available.

Documentation of Testing

Qualification results are documented and include, but are not necessarily limited to the following:

- Locations of accelerometers;
- Resonant frequency, if any, and transmission ratios (if exploratory tests are applicable);
- Equipment damping coefficients if there is resonance in the 1-60 Hz range or over the range of the test response spectra (if exploratory tests are applicable);
- Test equipment used;
- Approval signature and dates;
- Description of test facility;
- Summary of results;
- Equipment seismic qualification conclusions (including RBV dynamic loads); and

- Justification for using single axis or single frequency tests for all items that are tested in this manner.

See Subsection 3.10.1.4 for additional information on the documentation of test results.

3.10.2.2 Qualification by Analysis

The discussion presented in the following subsections applies to the qualification of equipment by analysis.

Analysis Methods

Dynamic analysis or an equivalent static analysis, described in Subsection 3.7.3, is employed to qualify the equipment. In general, the choice of the analysis is based on the expected design margin, because the static coefficient method (the easiest to perform) is far more conservative than the dynamic analysis method.

If the fundamental frequency of the equipment is above the input excitation frequency (cutoff frequency of RRS) the equipment is considered rigid. In this case, the loads on each component can be determined statically by concentrating its mass at its center of gravity and multiplying the values of the mass with the appropriate maximum floor acceleration (i.e., floor spectra acceleration at the high frequency asymptote of the RRS) at the equipment support point.

A static coefficient analysis may be also used for certain equipment in lieu of the dynamic analysis. No determination of natural frequencies is made in this case. The seismic loads are determined statically by multiplying the actual distributed weight of the equipment by a static coefficient equal to 1.5 times the peak value of the RRS at the equipment mounting location, at a conservative and justifiable value of damping.

If the equipment is determined to be flexible (i.e., with the fundamental frequency of the equipment within frequency range of the input spectra) and not simple enough for equivalent static analysis, a dynamic analysis method is applied.

Acceptance Criteria for Qualification by Analysis

The structural and functional integrity of the equipment is maintained under low level earthquake loads including appropriate RBV dynamic loads in combination with normal operating loads. Where applicable, normal operating and SSE loads including appropriate RBV dynamic loads do not result in failure of the equipment to perform its safety-related function(s).

Documentation of Analysis

Qualification results are documented and include, but are not necessarily limited to equipment specification requirements, a summary of qualification results, and justification that the methods used demonstrate that the equipment does not malfunction. See Subsection 3.10.1.4 for additional information on the documentation of qualification results.

3.10.2.3 Qualification by Combined Testing and Analysis

In some instances, it is not practical to qualify the equipment solely by testing or analysis. This may be because of the size of the equipment, its complexity, or the large number of similar configurations. The following subsections address the cases in which combined analysis and testing may be warranted.

Low Impedance Excitation

Large equipment may be impractical to test due to limitations in vibration equipment loading capability. With the equipment mounted to simulate service mounting, a number of exciters are attached at points that best excite the various modes of vibration of the equipment. Data are obtained from sensors for subsequent analysis of the equipment performance under seismic plus appropriate RBV dynamic loads. The amplification of resonant motion is used to determine the appropriate modal frequency and damping for a dynamic analysis of the equipment.

This method can be used to qualify the equipment by exciting the equipment to levels at least equal to the expected response from the SSE loads including appropriate RBV dynamic loads, by using analysis to justify the excitation, and by utilizing the test data on modal frequencies to verify the mathematical model.

Extrapolation of Similar Equipment

As discussed in IEEE 344-1987, the qualification of complex equipment by analysis is not recommended because of the great difficulty in developing an accurate analytical model.

In many instances, however, similar equipment has already been qualified but with changes in size or in specific qualified devices in a fixed assembly or structure. In such instances, a full test program (Subsection 3.10.2.1) is conducted on a typical piece of equipment. Assurance is obtained that changes from originally tested equipment do not result in the formation of previously non-existent resonances.

If the equipment is not rigid, the effects of the changes are analyzed. The test results combined with the analysis allow the model of the similar equipment to be adjusted to produce a revised stiffness matrix and to allow refinement of the analysis for the modal frequencies of the similar equipment. The result is a verified analytical model that is used to qualify the similar equipment.

Extrapolation of Dynamic Loading Conditions.

Test results can be extrapolated for dynamic loading conditions in excess of or different from previous tests on a piece of equipment when the test results are in sufficient detail to allow an adequate dynamic model of the equipment to be generated. The model provides the capability of predicting failure under the increased or different dynamic load excitation.

Documentation of Combined Testing and Analysis

Qualification results are documented and include, but are not necessarily limited to, equipment specification requirements, a summary of qualification results, and justification that the methods used demonstrate that the equipment does not malfunction.

If qualification is by analysis and testing or by extrapolation from similar equipment, the report includes:

- Reference to the specific method of combined analysis and testing used;
- Description of equipment involved;
- Analysis data;
- Test data; and
- Justification of results.

When extrapolation of data is made from similar equipment, a description of the differences between the equipment items involved is required. Justification that the differences do not degrade the seismic adequacy below acceptable limits and any additional supporting data shall be included.

See Subsection 3.10.1.4 for additional information on the documentation of qualification results.

3.10.2.4 (Deleted)

3.10.3 Analysis or Testing of Electrical Equipment Supports

The following subsections describe the general methods and procedures, as incorporated in the dynamic qualification program (see Subsection 3.10.1.3), for analysis and testing of supports of Seismic Category I electrical equipment. When possible, the supports of most of the electrical equipment (other than motor and valve-mounted equipment supports, mostly control panels and racks) are tested with the equipment installed. Otherwise, a dummy is employed to simulate inertial mass effects and dynamic coupling to the support.

Combined stresses of the mechanically designed component supports are maintained within the limits of ASME B&PV Code Section III, Division 1, Subsection NF, up to the interface with building structure, and the combined stresses of the structurally designed component supports defined as building structure in the project design specifications are maintained within the limits delineated in Section 3.8.

3.10.3.1 Nuclear Steam Supply System Electrical Equipment Supports (Other than Motors and Valve-Mounted Equipment)

The seismic and other RBV dynamic load qualification tests on equipment supports are performed over the frequency range of interest.

Some of the supports are qualified by analysis only. Analysis is used for passive mechanical devices and is sometimes used in combination with testing for larger assemblies containing Seismic Category I devices. For instance, a test is run to determine if there are natural frequencies in the support equipment within the critical frequency range. If the support is determined to be free of natural frequencies (in the critical frequency range), then it is assumed to be rigid and a static analysis is performed. If natural frequencies are present in the critical frequency range, then calculations of transmissibility and responses to varying input accelerations are determined to see if Seismic Category I devices mounted in the assembly would operate without malfunctioning. In general, the testing of Seismic Category I supports is accomplished using the following procedure:

Assemblies (e.g., control panels) containing devices which have dynamic load malfunction limits established are tested by mounting the assembly on the table of a vibration machine in the manner it is to be mounted when in use and vibration testing it by running a low-level resonance search. As with the devices, the assemblies are tested in the three major orthogonal axes.

The resonance search is run in the same manner as described for devices. If resonances are present, the transmissibility between the input and the location of each device is determined by measuring the accelerations at each device location and calculating the magnification between it and the input. Once known, the transmissibilities could be used analytically to determine the

response at any Seismic Category I device location for any given input. (It is assumed that the transmissibilities are linear as a function of acceleration even though they actually decrease as acceleration increases; therefore, it is a conservative assumption.)

As long as the device input accelerations are determined to be below their malfunction limits, the assembly is considered a rigid body with a transmissibility equal to one so that a device mounted on it would be limited directly by the assembly input acceleration.

Control panels and racks constitute the majority of Seismic Category I electrical assemblies. There are four basic generic panel types: vertical board, instrument panel, relay rack, and NEMA Type 12 enclosure. One or more of each type are tested to full acceleration levels and qualified using the above procedures. From these tests, it is concluded that most of the panel types have more than adequate structural strength and that a given panel design acceptability is just a function of its amplification factor and the malfunction levels of the devices mounted in it.

Subsequent panels are therefore tested at lower acceleration levels and the transmissibilities measured to the various devices as described. By dividing the devices' malfunction levels by the panel transmissibility between the device and the panel input, the panel dynamic qualification level could be determined. Several high level tests are run on selected generic panel designs to assure the conservativeness in using the transmissibility analysis described.

3.10.3.2 Other Electrical Equipment Supports

Supports for Battery Racks, Instrument Racks, Control Consoles, Cabinets, and Panels

Response spectra for floors where Seismic Category I equipment is located are supplied to each vendor. The vendor submits test data and/or calculations to verify that the equipment did not suffer any loss of function before, during, or after the specified dynamic disturbance. Analysis and/or testing procedures are in accordance with Subsection 3.10.2.

In essence, these supports are inseparable from their supported items and are qualified with the items or with dummy loads. During testing, the supports are fastened to the test table with fastening devices or methods used in the actual installation, thereby qualifying the total installation.

Cable Trays and Conduit Supports

Seismic Category I cable trays and conduit supports are designed by the response spectrum method. Analysis and dynamic load restraint measures are based on combined limiting values for static load, span length, and response to excitation at the natural frequency. Restraint against excessive lateral and longitudinal movement uses the structural capacity of the tray to determine the spacing of the fixed support points. Provisions for differential motion between buildings are made by breaks in the trays and flexible connections in the conduit.

The following loadings are used in the design and analysis of Seismic Category I cable tray and conduit supports:

Loads

- Dead loads and live loads - 112 kg/m (75 lbm/linear-ft) load used for 0.46 m (18 in) and wider trays; 75 kg/m (50 lbm/linear-ft) load used for 0.31 m (12 in) and narrower trays.
- Dynamic loads - SSE loads plus appropriate RBV dynamic loads.

Dynamic Analysis

- Regardless of cable tray function, all supports are designed to meet Seismic Category I requirements. Seismic and appropriate RBV dynamic loads are determined by dynamic analysis using appropriate response spectra.
- Floor Response Spectra — Floor response spectra used are those generated for the supporting floor. In case supports are attached to the walls or to two different locations, the upper bound envelope spectra are used. In many cases, to facilitate the design, several floor response spectra are combined by an upper bound envelope.

Structural requirements for Conduits and Cable Tray supports are also specified in Subsection 3.8.4.1.6.

Local Instrument Supports

For field-mounted Seismic Category I instruments, the following is applicable:

- The mounting structures for the instruments have a fundamental frequency above the excitation frequency of the RRS.
- The stress level in the mounting structure does not exceed the material allowable stress when the mounting structure is subjected to the maximum acceleration level for its location.

Instrument Tubing Support

The following bases are used in the seismic and appropriate RBV dynamic loads design and analysis of Seismic Category I instrument tubing supports:

- The supports are qualified by the response spectrum method;
- Dynamic load restraint measures and analysis for the supports are based on combined limiting values for static load, span length, and computed dynamic response; and
- The Seismic Category I instrument tubing systems are supported so that the allowable stresses permitted by Section III of ASME B&PV Code are not exceeded when the tubing is subjected to the loads specified in Subsection 3.9.2 for Class 2 and 3 piping.

3.10.3.3 Documentation of Testing or Analysis of Electrical Supports

Qualification results are documented and include, but are not necessarily limited to, equipment specification requirements, a summary of qualification results, and justification that the methods used demonstrate that the equipment does not malfunction. If qualification is by analysis, testing or extrapolation from similar equipment, the report includes:

- Reference to the specific method of combined analysis and testing used;
- Description of equipment involved;
- Analysis data;
- Test data; and
- Justification of results.

When extrapolation of data is made from similar equipment, a description of the differences between the equipment items involved is required. Justification that the differences do not degrade the seismic adequacy below acceptable limits and any additional supporting data shall be included.

See Subsection 3.10.1.4 for additional information on the documentation of qualification results.

3.10.4 COL Information

3.10.4-1-A Dynamic Qualification Report

The COL Applicant will provide a milestone for submitting an implementation schedule for the seismic and dynamic qualification of ESBWR mechanical and electrical equipment and provide a milestone for completing the DQR per Subsection 3.10.1.4.

3.10.4-2-H Equipment Qualification Records (Deleted)

3.10.5 References

3.10-1 USNRC, SRP 3.10 Draft Revision 3 (04/1996), "Seismic and Dynamic Qualification of Mechanical and Electrical Equipment."

3.10-2 General Electric Co., "General Electric Environmental Qualification Program," NEDE-24326-1-P, Proprietary Document, January 1983.

3.11 ENVIRONMENTAL QUALIFICATION OF MECHANICAL AND ELECTRICAL EQUIPMENT

3.11.1 Description Requirements

This section describes the requirements for the environmental qualification (EQ) elements of the equipment qualification program as related to electrical and mechanical equipment. The equipment qualification program also includes dynamic and seismic qualification of safety-related electrical and mechanical equipment. Dynamic qualification is addressed in Sections 3.9 and 3.10 for Seismic Category I mechanical and electrical equipment, respectively, and the discussion in this section focuses on the environmental qualification elements of the equipment qualification program.

The equipment qualification program includes safety-related electrical and mechanical equipment located in harsh and mild environments. Safety-related electrical equipment consists of all safety-related electrical power and instrumentation and control (I&C) equipment, which includes all safety-related analog (non-digital) and digital I&C components. Computer-based I&C equipment is a subset of digital I&C components.

Mechanical, electrical, and I&C equipment associated with systems described below are reviewed to determine whether they are designed to meet the requirements described under the acceptance criteria as follows:

A. Equipment associated with systems that are essential for emergency reactor shutdown, containment isolation, reactor core cooling, and containment and reactor heat removal, or otherwise are essential in preventing significant release of radioactive material to the environment,

B. Equipment that initiates the above functions automatically,

C. Equipment that is used by the operators to initiate the above functions manually,

D. Equipment whose failure can prevent the satisfactory accomplishment of one or more of the above safety functions,

E. Other electrical equipment important to safety, as described in 10 CFR 50.49(b)(1) and (2), and

F. Certain post-accident monitoring equipment, as described in 10 CFR 50.49(b)(3) and Regulatory Guide (RG) 1.97.

The electrical equipment identified in 10 CFR 50.49 as electric equipment important to safety covered by (b)(1), (b)(2), and (b)(3) is included in the equipment qualification program.

The equipment qualification program includes qualification of safety-related electrical and mechanical equipment for natural phenomena and external events, unless the adverse effects are precluded by design. For example, location of safety-related electrical and mechanical equipment within safety-related structures may preclude the adverse effects of flood, wind, tornados, and tornado missiles.

The equipment qualification program includes safety-related electrical equipment, including I&C equipment in a mild environment. Safety-Related Distributed Control and Information System

equipment located in areas characterized as mild environments, also meets RG 1.209, "Guidelines for Environmental Qualification of Safety-Related Computer-based Instrumentation and Control Systems in Nuclear Power Plants," (Reference 3.11-4), and type testing is the preferred method of qualification.

Mild environments do not experience a loss-of-coolant-accident (LOCA), high energy line break (HELB), or main steamline break (MSLB) and have the environmental limits shown in Table 3H-13.

Equipment supporting RTNSS functions located inside containment are included in the equipment qualification program, and are qualified using the appropriate methods for their location. The remainder of the RTNSS equipment is qualified as outlined in Section 19A. Table 3.11-1 includes RTNSS equipment located inside containment.

The equipment in the EQ program is referred to as EQ equipment.

3.11.1.1 Applicable Regulations and Standards

The environmental qualification of electrical and mechanical equipment meets the relevant requirements of the following regulations:

(1) Code Federal Regulations (CFR):

a. 10 CFR 50, Appendix A, General Design Criterion 1, "Quality Standards and Records."

b. 10 CFR 50, Appendix A, General Design Criterion 2, "Design Bases for Protection Against Natural Phenomena."

c. 10 CFR 50, Appendix A, General Design Criterion 4, "Environmental and Dynamic Effects Design Bases."

d. 10 CFR 50, Appendix A, General Design Criterion 23, "Protection System Failure Modes."

e. 10 CFR 50.49, "Environmental Qualification of Electric Equipment Important to Safety for Nuclear Power Plants."

f. 10 CFR 50, Appendix B, "Quality Assurance Criteria for Nuclear Power Plants and Fuel Reprocessing Plants," Section III, "Design Control," Section XI, "Test Control," and Section XVII, "Quality Assurance Records."

(2) Institute of Electrical and Electronics Engineers (IEEE):

a. IEEE-323-2003, "Standard for Qualifying Class 1E Equipment for Nuclear Power Generating Stations." Note: Applies only to electrical equipment in a mild environment.

b. IEEE-317-1983 (R2003), "Standard for Electric Penetration Assemblies in Containment Structures for Nuclear Power Generating Stations."

c. IEEE-383-2003, "Standard for Qualifying Class 1E Electric Cables and Field Splices for Nuclear Power Generating Stations."

d. IEEE-420-2001, "Standard for the Design and Qualification of Class 1E Control Boards, Panels and Racks Used in Nuclear Power Generating Stations."

e. IEEE-535-1986 (R1994), "Standard for Qualification of Class 1E Lead Storage Batteries for Nuclear Power Generating Stations."[1]

f. IEEE-603-1991, "Standard Criteria for Safety Systems for Nuclear Power Generating Stations."

g. (Deleted)

h. IEEE-638-1992 (R2006), "Standard for Qualification of Class 1E Transformers for Nuclear Power Generating Stations."

i. IEEE-649-1991 (R2004), "Standard for Qualifying Class 1E Motor Control Centers for Nuclear Power Generating Stations."

j. IEEE-650-1990 (R1998), "Standard for Qualification of Class 1E Static Battery Chargers and Inverters for Nuclear Power Generating Stations."

k. IEEE-382-1996 (R2004), "Standard for Qualification of Actuators for Power-Operated Valve Assemblies with Safety-Related Functions for Nuclear Power Plants."

l. (Deleted)

m. IEEE-572-1985 (R2004), "Standard for Qualification of Class 1E Connection Assemblies for Nuclear Power Generating Stations."

n. IEEE-634-2004, "Standard Cable-Penetration Fire Stop Qualification Test."

o. IEEE-323-1974, "Standard for Qualifying Class 1E Equipment for Nuclear Power Generating Stations."

p. IEEE-334-1994 (R1999), "IEEE Standard for Qualifying Continuous Duty Class 1E Motors for Nuclear Power Generating Stations."

q. IEEE-344-1987 (R1993), "Recommended Practice for Seismic Qualification of Class 1E Equipment for Nuclear Power Generating Stations."

r. IEEE-497-2002, "Standard Criteria for Accident Monitoring Instrumentation for Nuclear Power Generating Stations."

s. IEEE-7-4.3.2-2003, "IEEE Standard Criteria for Digital Computers in Safety Systems of Nuclear Power Generating Stations."

t. IEEE-1202-2006, "Standard for Flame Propogation Testing of Wire and Cable."

(3) American Society of Mechanical Engineers (ASME):

a. ASME Boiler and Pressure Vessel (B&PV) Code Section III, "Rules for Construction of Nuclear Facility Components."

b. ASME NQA-1-1983, Addenda NQA-1a-1983, "Quality Assurance Program Requirements for Nuclear Facilities."

(4) U.S. Nuclear Regulatory Commission (NRC) Regulatory Guides:

a. Regulatory Guide 1.63, "Electric Penetration Assemblies in Containment Structures for Nuclear Power Plants."

[1] Applies except that duty cycle is 72 hours.

b. Regulatory Guide 1.73, "Qualification Tests of Electric Valve Operators Installed Inside the Containment of Nuclear Power Plants."

c. Regulatory Guide 1.89, "Environmental Qualification of Certain Electric Equipment Important to Safety for Nuclear Power Plants."

d. Regulatory Guide 1.131, "Qualification Tests of Electric Cables, Field Splices and Connections for Light-Water-Cooled Nuclear Power Plants."

e. Regulatory Guide 1.153, "Criteria for Safety Systems."

f. Regulatory Guide 1.183, "Alternative Radiological Source Terms for Evaluating Design Basis Accidents at Nuclear Power Reactor."

g. Regulatory Guide 1.97, "Criteria for Accident Monitoring Instrumentation for Nuclear Power Plants."

h. Regulatory Guide 1.180, "Guidelines for Evaluating Electromagnetic and Radio-Frequency Interference in Safety-Related Instrumentation and Control Systems."

i. Regulatory Guide 1.209, "Guidelines for Environmental Qualification of Safety-Related Computer-Based Instrumentation and Control Systems in Nuclear Power Plants."

j. Regulatory Guide 1.40, "Qualification Tests of Continuous-Duty Motors Installed Inside the Containment of Water-Cooled Nuclear Power Plants."

k. Regulatory Guide 1.100, "Seismic Qualification of Electric and Mechanical Equipment for Nuclear Power Plants."

l. Regulatory Guide 1.156, "Environmental Qualification of Connection Assemblies for Nuclear Power Plants."

m. Regulatory Guide 1.158, "Qualification of Safety-Related Lead Storage Batteries for Nuclear Power Plants."

(5) Department of Defense (DOD) Military Standards (MIL-STD)

a. MIL-STD 461E, "Requirements for the Control of Electromagnetic Interference Characteristics of Subsystems and Equipment."

(6) International Electrotechnical Commission (IEC)

a. 61000-4 series, "Electromagnetic Compatibility (EMC): Testing and Measurement Techniques."

3.11.1.2 General Requirements

Environmental design and qualification used to implement the relevant requirements of 10 CFR 50.49; General Design Criteria (GDC) 1, 2, 4 and 23; and 10 CFR 50, Appendix B, Quality Assurance Criteria III, XI, and XVII are as follows:

(1) The equipment is designed to have the capability of performing its design safety-related functions under all anticipated operational occurrences (AOOs) and normal, accident, and post-accident environments and for the length of time for which its function is required.

(2) The equipment environmental capability is demonstrated by appropriate testing and analyses.

(3) A quality assurance program meeting the requirements of 10 CFR Part 50, Appendix B, is established and implemented to provide assurance that all requirements have been satisfactorily accomplished.

A review is performed to assure conformance with the environmental design basis requirements of 10 CFR Part 50, Appendix A, GDC 4 which states, in part, that "Structures, systems, and components important to safety shall be designed to accommodate the effects of and to be compatible with the environmental conditions associated with normal operation, maintenance, testing, and postulated accidents, including loss-of-coolant-accidents."

3.11.1.3 Definitions

Normal Operating Conditions — Planned, purposeful, reactor operating conditions including startup, power range, hot standby (condenser available), shutdown, and refueling.

Anticipated Operational Occurrences (AOOs) – Conditions of normal operation expected to occur one or more times during the life of the nuclear power unit and include but not limited to loss of the turbine generator set, isolation of the main condenser and loss of offsite power.

Test Conditions — Planned testing including pre-operational tests.

Accident Conditions — A single event not reasonably expected during the course of plant operation that has been hypothesized for analysis purposes or postulated from unlikely but possible situations or that has the potential to cause a release of radioactive material (a reactor coolant pressure boundary rupture may qualify as an accident; a fuel cladding defect does not).

Design Basis Event (DBE) or Design Basis Accident (DBA) – Postulated events used in the design to establish the acceptable performance requirements for structures, systems, and components.

Equipment – The physical envelope of structures, systems and components which is the device or represents a collection of physically connected devices that perform the required function, or a group of related and representative functions, that as a whole unit is representative of how it will be installed in the plant. Specific to electrical equipment, including computer-based I&C, this physical envelope is defined as the cabinet or enclosure. The cabinet or enclosure contains representative and functional electrical or electronic assemblies and components (e.g.; chassis, controller packages, instruments, power supplies, video display units, fans, cabling, wiring, baffles, auxiliary devices). This does not include Interfaces which are defined separately.

Equipment Qualification – The generation and maintenance of evidence to ensure equipment will operate on demand to meet system performance requirements during normal and AOO service conditions and postulated design basis events.

Harsh Environment – An environment resulting from a design basis event, i.e., LOCA, HELB, and MSLB.

Interfaces – Physical attachments, mounting, auxiliary components, and connectors (electrical and mechanical) to the equipment at the equipment boundary.

Margin – The difference between service conditions and the conditions used for equipment qualification.

Mild Environment – An environment that would at no time be significantly more severe than the environment that would occur during normal plant operation, including AOOs.

Post-Accident Conditions — The environment after an accident where equipment must perform its safety-related function and must remain in a safe mode after the safety-related function is performed.

Qualified Life – The period of time, prior to the start of a design basis event, for which the equipment was demonstrated to meet the design requirements for the specified service conditions.

Service Conditions – Environmental, loading, power, and signal conditions expected as a result of normal operating requirements, expected extremes (abnormal) in operating requirements, and postulated conditions appropriate for the design basis events of the station.

Significant Aging Mechanism – An aging mechanism that, under normal and abnormal service conditions, causes degradation of equipment that progressively and appreciably renders the equipment vulnerable to failure to perform its safety-related function(s) during the design basis event conditions.

3.11.2 Equipment Identification

The equipment qualification program generates and maintains a list of EQ equipment located in harsh and mild environments. The systems containing EQ equipment are identified in Table 3.11-1.

The Environmental Qualification Document (EQD) summarizes the qualification results for all EQ equipment in the equipment qualification program. The EQD is current and in an auditable form for the entire period during which the covered item is installed or is stored for future use to permit verification that each item meets the equipment qualification requirements.

3.11.3 Environmental Conditions

3.11.3.1 General Requirements

Environmental Design Bases

Analysis is performed to identify the environmental design bases including the definition of AOO and normal, accident, and post-accident environments. DBA and AOO define the temperature and pressure time-dependent information for areas subject to accidents and AOOs.

EQ equipment is qualified to the worst-case environmental conditions for the areas in which they are located for the duration that they are required to perform their safety-related function.

The environmental design basis includes the safety-related function for each item of safety-related equipment and its acceptance criteria; electromagnetic interference/radio frequency interference (EMI/RFI) and voltage Surges; environmental conditions including temperature, equipment heating, Heating, Ventilation and Air Conditioning (HVAC) and lack of HVAC, inside and outside maximum and minimum temperatures, and time dependency of temperatures.

The safety-related functions are either functional performance requirements or fail-safe requirements. A fail-safe safety-related function consists of not failing in a manner detrimental to plant safety, accident mitigation, or prevention of a safety-related function. The basis for the safety-related function is included in the qualification documentation.

The following provides detailed information on each environment included in the environmental design basis. The environments are considered for electrical and mechanical equipment in the EQ program.

Temperature

The temperature qualification for EQ equipment in harsh environments is by test. EQ equipment is demonstrated to perform as intended while exposed to the qualification temperature. The qualification temperature is 10°C higher than the maximum temperature to which the equipment is exposed for the worst-case DBA, while the equipment is under its maximum loading, to comply with margin requirements.

For EQ safety-related electrical equipment in mild environments, except for digital computer-based I&C, the temperature qualification methods are test or analysis. The maximum qualification temperature is 10°C higher than the maximum temperature to which the equipment is exposed for the worst-case AOO, while the equipment is under its maximum loading, to comply with margin requirements. The minimum qualification temperature is 10°C lower than the minimum temperature to which the equipment is exposed for the worst-case AOO.

For EQ safety-related digital computer-based I&C equipment in mild environments, the temperature qualification method is by test. The maximum qualification temperature is 10°C higher than the maximum temperature to which the equipment is exposed for the worst-case AOO, while the equipment is under its maximum loading, to comply with margin requirements. The minimum qualification temperature is 10°C lower than the minimum temperature to which the equipment is exposed for the worst-case AOO.

Since HVAC is nonsafety-related, AOO, including Station Blackout (SBO), and DBA conditions assume no HVAC cooling and assume worst case highest ambient temperature caused by lack of HVAC, maximum outside temperature, and maximum heat rise from collocated and adjacent heat sources. Additionally, AOO, including SBO, conditions assume no HVAC heating and assume worst case lowest ambient temperature caused by lack of HVAC heating, minimum outside temperature, and minimum heat rise from collocated and adjacent heat sources.

This ensures that EQ equipment is qualified for the worst-case temperatures with margin per the requirements of IEEE 323-1974 for Harsh Environment and IEEE 323-2003 for Mild Environment.

Pressure

The pressure qualification for EQ equipment in harsh environments is by test. The qualified pressure is 10% higher, to comply with margin requirements, than the maximum pressure to which the equipment is exposed for the worst-case DBA, while the equipment is under its maximum loading.

For EQ safety-related electrical equipment in mild environments, including digital computer-based I&C, the pressure qualification methods are by test or analysis. The qualified pressure is 10% higher, to comply with margin requirements, than the maximum pressure to which the

equipment is exposed for the worst-case AOO, while the equipment is under its maximum loading.

This ensures that EQ equipment is qualified for the worst-case pressure with margin per the requirements of IEEE 323-1974 for Harsh Environment and IEEE 323-2003 for Mild Environment.

Humidity

Relative humidity requirements are defined for DBAs and AOOs, and EQ equipment is qualified for the applicable relative humidity conditions. The qualification for steam exposure for safety-related equipment in harsh environments is by test. The qualified steam conditions are those identified in the DBA analysis.

For EQ safety-related electrical equipment in mild environments, including digital computer-based I&C, the qualification methods for humidity are by test or analysis.

This ensures that EQ equipment is qualified for the worst-case humidity conditions per the requirements of IEEE 323-1974 for Harsh Environment and IEEE 323-2003 for Mild Environment.

Chemical effects

The assumed composition of chemicals is at least as severe as that resulting from the most limiting mode of plant operation (e.g., normal operation and borated water from the SLC system). There is no caustic containment spray in an ESBWR. The qualification for chemical exposure for EQ equipment in harsh environments is by test.

This chemical exposure test ensures that EQ equipment is qualified for the worst-case chemical conditions per the requirements of IEEE 323-1974. The EQ safety-related electrical equipment, including digital computer-based I&C, in mild environments is not exposed to chemicals.

Radiation

The radiation environment is based on the type of radiation, the total dose expected during normal operation over the installed life of the equipment, and the radiation environment associated with the most severe DBA during or following which the equipment is required to remain functional, including the radiation resulting from recirculating fluids for equipment located near recirculating lines and including dose rate effects. Radiation exposure simulates radiation degradation for the total integrated dose applicable for the normal radiation dose. Accident dose may be added to the normal dose and a single radiation total dose applied by test. Equipment that has accident dose rate sensitivity is tested at the most degrading dose rate. EQ equipment is qualified for radiation. The qualification for radiation for EQ equipment in harsh environments is by test. The qualification radiation total integrated accident dose is 10% higher, to comply with margin requirements, than the maximum accident total integrated dose to which the equipment is exposed for the worst-case DBA.

EQ equipment that could be exposed to radiation is environmentally qualified to a radiation dose that simulates the calculated radiation environment (normal and accident) that the equipment should withstand prior to completion of its required safety-related functions. Such qualification considers that equipment damage is a function of total integrated dose and can be influenced by dose rate, energy spectrum, and particle type. The radiation qualification includes doses from all

potential radiation sources at the equipment location. Specific plant design features to maintain radiation exposure to equipment less than the equipment qualification levels inside the containment during normal operations will be evaluated during the detailed design process. These analyses will evaluate each specific equipment location and determine design features needed to maintain integrated doses less than the qualification criteria for electronic equipment. If the integrated dose exceeds the equipment qualification values after the detailed calculations, shielding or other methods (e.g., equipment replacement program) to reduce the dose will be incorporated during the detailed design. Plant-specific analysis is used to justify any reductions in dose or dose rate resulting from component location or shielding. The foregoing defines how the qualification environment at the equipment location is established.

Shielded components are qualified only to the gamma radiation environment provided it can be demonstrated that the sensitive portions of the component or equipment are not exposed to significant beta radiation dose rates or that the effects of beta radiation, including heating and secondary radiation, have no deleterious effects on component performance. If, after considering the appropriate shielding factors, the total beta radiation dose contribution to the equipment or component is calculated to be less than 10% of the total gamma radiation dose to which the equipment or component has been qualified, the equipment or component is considered qualified for the beta and gamma radiation environment, based only on gamma radiation testing.

EQ equipment located outside containment that is exposed to the radiation from a recirculating fluid is qualified to withstand the radiation penetrating the containment plus the radiation from the recirculating fluid.

For EQ safety-related electrical equipment in mild environments, including digital computer-based I&C, the qualification methods for radiation are by test or analysis. A mild radiation environment for electronic equipment is a total integrated dose less than 10 Gy (1.0E3 rad), and a mild radiation environment for other equipment is less than 100 Gy (1.0E4 rad). Safety-related electronic and electrical equipment is tested with the equipment energized and performing its safety-related function, if the required total integrated dose exceeds the mild environment level.

This ensures EQ equipment is qualified for the worst-case radiation with DBA margin per the requirements of IEEE 323-1974 for Harsh Environment and IEEE 323-2003 for Mild Environment.

Operating Time

EQ equipment is qualified for its required operating time during DBA and post-accident conditions. Some mechanical and electrical equipment may be required to perform an intended function from within minutes of the occurrence of an event up to 10 hours into the event. Such equipment is shown to remain functional in the accident environment for a period of at least one hour in excess of the time assumed in the accident analysis unless a time margin of less than one hour can be justified. Such justification includes for each piece of equipment:

(1) Consideration of a spectrum of breaks;

(2) The potential need for the equipment later in the event or during recovery operations;

(3) Determination that failure of the equipment after performance of its safety-related function is not detrimental to plant safety nor misleads the operator; and

(4) Determination that the margin applied to the minimum operability time, when combined with other test margins, accounts for the uncertainties associated with the use of analytical techniques in the derivation of environmental parameters, the number of units tested, production tolerances, and test equipment inaccuracies.

For EQ equipment with a required time of operation during accident and post-accident conditions of more than 10 hours, testing demonstrates that the EQ equipment remains functional under such conditions for a period of time at least 10% longer than the required time of operation.

Aging

EQ equipment in harsh environments is analyzed for significant aging mechanisms. If the equipment is determined to have a significant aging mechanism, then the mechanism is accounted for in the qualification program. Aging mechanisms include time-temperature degradation, cycle aging and normal radiation exposure. Artificial aging or natural aging simulate time-temperature degradation. Artificial aging is determined from the Arrhenius Equation. Cycle aging conservatively simulates the degradation during the required operating cycles. Use of synergistic effects is considered when these effects are believed to have a significant effect on equipment performance.

Age conditioning is not required for EQ equipment without significant aging mechanisms, or for EQ safety-related equipment in mild environments.

Equipment is reviewed in terms of design, function, materials, and environment for its specified application to identify potentially significant aging mechanisms. An aging mechanism is significant if subsequent to manufacture, while in storage, and/or in the normal and abnormal service environment, it results in degradation of the equipment that progressively and appreciably renders the equipment vulnerable to failure to perform its safety-related function(s) under DBE conditions.

Artificial accelerated aging simulates the significant aging mechanisms and a qualified life is established. For materials with a qualified life of less than 60 years, maintenance requirements are established to ensure that the material is replaced prior to the end of its qualified life. Alternatively, materials with a qualified life of less than 60 years may be evaluated with condition monitoring to ensure that the material degradation is less than the degradation, which was simulated in type tests, prior to the simulated DBA conditions.

Submergence

EQ equipment that is submerged during or after a design basis event is tested for the resulting worst-case submergence.

Synergistic effects

The age conditioning considers sequential, simultaneous, and synergistic effects in order to achieve the worst state of degradation. Synergistic effects are considered when they have a significant effect on equipment performance.

Electromagnetic interference (EMI)/radio frequency interference (RFI) and Voltage Surges

EQ equipment is qualified for EMI/RFI and voltage surge protection against the following:

- EMI
- RFI
- Electrostatic Discharge
- Electrical Surge

EMI qualifications follow the requirements defined in EPRI TR-102323 –1994 (as approved by NRC Safety Evaluation Report dated April 16 1996)or MIL-STD 461E or IEC 61000-4 series. The qualification for EMI/RFI and voltage surges for EQ equipment in harsh and mild environments is by test, consistent with RG 1.180. Nonsafety-related electrical and digital computer-based I&C equipment is tested for conducted emission via power leads and radiated emission from electric fields to ensure that emissions from nonsafety-related electrical and I&C equipment do not exceed allowable limits and do not affect the EQ equipment.

This ensures that safety-related equipment is qualified for EMI/RFI and voltage surges per the requirements of IEEE 323-2003.

3.11.3.2 Environmental Requirements

Environmental conditions for the zones where EQ equipment is located are calculated for normal, AOO, test, accident and post-accident conditions and are documented in Appendix 3H, Equipment Qualification Environmental Design Criteria. Environmental conditions are tabulated by zones contained in the referenced building arrangements. Typical equipment in the noted zones is shown in the referenced system design schematics.

Environmental parameters include thermodynamic parameters (temperature, pressure and relative humidity), radiation parameters (radiation type, dose rates and total integrated dose) and chemical spray parameters (chemical composition and the resulting pH).

AOO and test condition environments are bounded by the normal or accident conditions according to the Appendix 3H tables.

Margins are included in the qualification parameters to account for normal variations in commercial production of equipment and reasonable errors in defining satisfactory performance. The environmental conditions shown in the Appendix 3H tables do not include margins.

The environmental conditions shown in the Appendix 3H tables are upper-bound envelopes used to establish the environmental design and qualification bases for equipment. The upper bound envelopes indicate that the zone data reflect the worse case expected environment produced by a compendium of accident conditions.

3.11.4 Qualification Program, Methods and Documentation

3.11.4.1 Harsh Environment Qualification

Some EQ equipment is located in a harsh environment. All three categories of 10 CFR 50.49(b) electrical equipment that are located in a harsh environment are qualified by test or other methods as described in IEEE-323-1974 and permitted by 10 CFR 50.49(f) (Reference 3.11-2). Equipment type test is the preferred method of qualification.

A type test subjects a representative sample of equipment, including interfaces, to a series of tests, simulating the effects of significant aging mechanisms during normal operation. The sample is subsequently subjected to DBA testing that simulates and thereby establishes the tested configuration for installed equipment service, including mounting, orientation, interfaces, conduit sealing, and expected environments. A type test demonstrates that the equipment performs the intended safety-related function(s) for the required operating time before, during, and/or following the DBA, as appropriate.

Performance data from equipment of similar design that has successfully operated under known service conditions may be used in qualifying other equipment to equal or less severe conditions. Applicability of this data depends on the adequacy of documentation establishing past service conditions, equipment performance, and similarity to the equipment to be qualified and upon which operating experience exists. A demonstration of required operability during applicable DBA(s) is included in equipment qualification programs based on operating experience, when harsh environment design basis event qualification is required.

Qualification by analysis requires a logical assessment or a valid mathematical model of the equipment to be qualified. The bases for analysis typically include physical laws of nature, results of test data, operating experience, and condition indicators. Analysis of data and tests for material properties, equipment rating, and environmental tolerance can be used to demonstrate qualification. However, analysis alone is not used to demonstrate the initial qualification for safety-related electrical equipment in a harsh environment.

EQ safety-related mechanical equipment qualified by analysis is consistent with ASME B&PV Code Section III, "Rules for Construction of Nuclear Facility Components."

Active EQ safety-related mechanical equipment is qualified by the qualification methods of IEEE 323-1974.

EQ equipment located in harsh environments may be qualified by combinations of type test, operating experience, and analysis. For example, if a type test of a complete assembly is not possible, component testing supplemented by analysis may be used.

The ESBWR equipment qualification program meets the guidance of RG 1.89, "Environmental Qualification of Certain Electric Equipment Important to Safety for Nuclear Power Plants." RG 1.89 endorses IEEE 323-1974. EQ equipment is qualified using the qualification methods of IEEE 323-1974.

The effects of chemical spray must be addressed. Containment spray, emergency core cooling initiation, and recirculation system operation are included in the qualification tests. The ESBWR SLC system injects borated water into the Reactor Pressure Vessel (RPV) during DBA LOCA. Containment spray is not caustic; therefore the effect of the water spray is included in the equipment qualification.

The equipment qualification program includes safety-related mechanical equipment in harsh environment areas and verifies that they are designed to be compatible with postulated environmental conditions, including those associated with LOCA. Active safety-related mechanical equipment is qualified using test, analysis, or a combination of test and analysis.

In some instances, mechanical equipment loading under normal service is more severe than loading under DBA. The loading under normal service is documented with test and/or analysis.

The loading and capability under DBA conditions is analyzed in the equipment qualification process to establish the suitability of materials, parts, and equipment needed for safety-related functions, and to verify that the design of such materials, parts, and equipment is adequate. The qualification of mechanical equipment includes materials that are sensitive to environmental effects (e.g., seals, gaskets, lubricants, fluids for hydraulic systems, and diaphragms), required operating time, non-metallic subcomponents of such equipment; the environmental conditions and process parameters for which this equipment must be qualified; non-metallic material capabilities; and the evaluation of environmental effects.

The EQ equipment in a harsh environment has a maximum qualified life of 60 years. The qualified life is verified using methods and procedures of qualification as stated in IEEE-323-1974 and as addressed herein.

The duty cycle of safety-related batteries in ESBWR is different from the duty cycle basis in IEEE-535-1986. Safety-related batteries are qualified to meet IEEE-535-1986, with the exception that the duty cycle is 72 hours and supplemental discharge cycle testing is required to meet the harsh environment qualification process of IEEE-323-1974.

ESBWR's equipment qualification type test process for batteries includes evaluation of significant aging mechanisms that are related to failure mechanisms from radiation exposure, time-temperature aging, and cycle aging; age testing for significant aging mechanisms for a 20-year qualified life; seismic test; and performance testing for the 72-hour duty cycle (see Reference 3.11-6).

3.11.4.2 Mild Environment Qualification

EQ safety-related equipment located in a mild environment is qualified per guidelines of Regulatory Guide 1.209 – 2007 and IEEE 323-2003 for qualification of Safety Related or Important to Safety digital I&C to be installed in a mild environment.

For EMI/RFI qualification, as endorsed in Regulatory Guide 1.180, Rev 1, qualification methods shall be per EPRI TR-102323 –1994 (as approved by NRC Safety Evaluation Report dated April 16 1996) or MIL-STD- 461E or IEC 61000-4 series.

To assure EQ safety-related equipment located in a mild environment meets its safety-related functional requirements during normal environmental conditions and AOOs, the environmental design basis for normal environmental conditions and AOO requirements is specified in the design/purchase specifications. A qualified life is not required for equipment located in a mild environment that has no significant aging mechanisms.

For all EQ safety-related equipment, excluding EQ safety-related digital computer-based I&C systems, a Certificate of Conformance from the vendor of the safety-related equipment to be located in a mild environment needs to certify performance to the environmental design basis for normal environmental conditions and AOO requirements for the equipment location for the time that the safety-related function is required.

3.11.4.3 Computer-based Instrumentation and Control Systems

EQ safety-related digital computer-based I&C systems comply with RG 1.209 and RG 1.180. For all EQ safety-related digital computer-based I&C systems, located in a mild environment, type testing is the preferred qualification method to demonstrate performance to the

environmental design basis for normal environmental conditions and AOO requirements for the equipment location for the time that the safety-related function is required.

Type tests may be separate laboratory or manufacturer's tests that document performance to the applicable service conditions with due consideration for synergistic effects, if applicable.

When digital computer-based I&C systems type testing is performed:

- The system under test functions and performs with safety-related software that has been validated and verified and is representative of the software to be installed in the nuclear power plant.
- Testing demonstrates performance of safety-related functions at the specified environmental service conditions, including AOOs.
- Testing exercises all portions of the system under test that are necessary to accomplish the safety-related functions and those portions whose operation or failure could impair the safety-related functions.
- Testing confirms the response of digital interfaces and verifies that the design accommodates the potential impact of environmental effects on the overall response of the system.
- Testing of representative sample of the equipment as a complete system contained within its cabinet or enclosure is preferred.
- When testing of a complete system is not practical, confirmation of the dynamic response to the most limiting environmental and operational conditions is based on type testing of the individual modules and analysis of the cumulative effects of environmental and operational stress on the entire system to demonstrate required safety-related performance.

In addition to Type Testing, analysis may be utilized per 10CFR50.49 to support digital I&C qualification in a mild environment via;

(1) Testing an identical item of equipment under identical conditions or under similar conditions with a supporting analysis to show that the equipment to be qualified is acceptable.

(2) Testing a similar item of equipment with a supporting analysis to show that the equipment to be qualified is acceptable.

(3) Experience with identical or similar equipment under similar conditions with a supporting analysis to show that the equipment to be qualified is acceptable.

(4) Analysis in combination with partial type test data that supports the analytical assumptions and conclusions.

The evidence of qualification in a mild environment is consistent with the guidance given in IEEE 323-2003 Section 7.2.

3.11.4.4 Environmental Qualification Documentation

The procedures and results of qualification by tests, analyses or other methods are documented, maintained, and reported in accordance with requirements of 10 CFR 50.49(j), RG 1.209, and IEEE 323-2003 Section 7.2. The EQD summarizes the qualification results for all equipment identified in Subsection 3.11.2. The EQD is developed during program implementation and includes the following:

- The environmental parameters and the methodology used to qualify the equipment for harsh and mild environments.
- The System Component Evaluation Work sheets which include a summary of environmental conditions and qualified conditions.

The compliance with the applicable portions of the GDC of 10 CFR 50, Appendix A, and the Quality Assurance Criteria of 10 CFR 50, Appendix B are described in the NRC approved Licensing Topical Report on GE's environmental qualification program (Reference 3.11-3).

The COL Applicant will provide a full description and milestone for program implementation of the environmental qualification program that includes completion of the plant specific EQD. (Refer to Subsection 3.11.7, Item 3.11-1-A).

3.11.5 Loss of Heating, Ventilating and Air Conditioning

Sections 6.4 and 9.4 describe the HVAC systems including their design evaluations. The loss of ventilation conditions are considered in Appendix 3H and the calculations are based on maximum heat loads assuming operation of all operable equipment regardless of safety-related classification.

3.11.6 Estimated Chemical and Radiation Environment

Chemical Environment

Equipment in the lower portions of the containment is potentially subject to submergence. The chemical composition and resulting pH to which safety-related equipment is exposed during normal operating and accident conditions is reported in Appendix 3H.

Sampling stations are provided for periodic analysis of reactor water, refueling and fuel storage pool water, and suppression pool water to assure compliance with operational limits of the plant technical specifications.

Radiation Environment

EQ equipment is designed to perform its safety-related function when exposed to the normal operational radiation levels and accident radiation levels.

Dose rates and integrated doses of radiation that are associated with normal plant operation and the DBA condition for various plant compartments are presented in Appendix 3H; these parameters are presented in terms of time-based profiles where applicable.

3.11.7 COL Information

3.11-1-A Environmental Qualification Document

The COL Applicant will provide a full description and a milestone for program implementation of the environmental qualification program that includes completion of the plant-specific EQD per Subsection 3.11.4.4.

3.11-2-H Environmental Qualification Records (Deleted)

3.11.8 References

3.11-1 USNRC, Standard Review Plan, NUREG-0800, SRP 3.11, Revision 3, March 2007, "Environmental Qualification of Mechanical and Electrical Equipment."

3.11-2 USNRC, Code of Federal Regulations, Title 10, Chapter I, Part 50, Paragraph 50.49, "Environmental Qualification of Electric Equipment Important to Safety for Nuclear Power Plants."

3.11-3 General Electric Co., "General Electric Environmental Qualification Program," NEDE-24326-1-P, Proprietary Document, January 1983.

3.11-4 Regulatory Guide 1.209, "Guidelines for Environmental Qualification of Safety-Related Computer-Based Instrumentation and Control Systems in Nuclear Power Plants," March 2007.

3.11-5 NUREG 0588, USNRC, "Interim Staff Position on Environmental Qualification of Safety-Related Electrical Equipment," December 1979.

3.11-6 [*GE Hitachi Nuclear Energy, "ESBWR Qualification Plan Requirements for a 72-Hour Duty Cycle Battery," NEDE-33516P Revision2, Proprietary Document, December 2009*.]*

* The reference that is bracketed and italicized with an asterisk following the brackets is designated as Tier 2*. Prior NRC approval is required to change Tier 2* information

Table 3.11-1

Electrical and Mechanical Equipment for Environmental Qualification

Components	Quantity	Location (note 1)	Function (note 2)	Required Operation Time (note 3)	Qualification Program (note 4)
B21 Nuclear Boiler System					
Depressurization Valves	8	CV	ESF	72 hr	MH
Safety Relief Valves	10	CV	ESF	72 hr	MH
Temperature element in DPV/SRV Discharge	18	CV	ESF	72 hr	EH
MSIV - Inboard	4	CV	PB	100 Days	MH
MSIV - Outboard	4	ST	PB	100 Days	MH
MSIV Drain Bypass Valve	2	ST	ESF	72 hr	MH
Steam Line Lowpoint Drain Bypass Valve	1	TB	ESF	72 hr	MH
Feedwater isolation valve	8	ST, CV	PB	100 Days	MH
RPV Level Transmitters	All	RB	ESF	100 Days	EH
RPV Temperature Elements	All	CV	ESF	100 Days	EH
RPV Pressure Transmitter	All	RB	ESF	100 Days	EH
Feed Piping Diff Pressure Transmitter	All	RB	ISOL	100 Days	EH
Steam Line Flow Transmitter	All	RB	ISOL	100 Days	EH
Electrical Modules and Cable	All	CV, RB, ST, TB	ESF	100 Days	EH
B32 Isolation Condenser System					
Isolation Valves	16	CV	PB	100 Days	MH
Isolation Valves Operator	16	CV	ESF	100 Days	MH
Condensate Return Valves	4	CV	ESF	100 Days	MH
Condensate Return Valves Operator	4	CV	ESF	100 Days	MH

Table 3.11-1

Electrical and Mechanical Equipment for Environmental Qualification

Components	Quantity	Location (note 1)	Function (note 2)	Required Operation Time (note 3)	Qualification Program (note 4)
Condensate Return Bypass Valve	4	CV	ESF	100 Days	MH
Condensate Return Bypass Valve Operator	4	CV	ESF	100 Days	MH
Upper Header Vent Valve	8	CV	ESF	100 Days	MH
Upper Header Vent Valve Actuator	8	CV	ESF	100 Days	MH
Lower Header Vent Valve	16	CV	ESF	100 Days	MH
Lower Header Vent Valve Actuator	12	CV	ESF	100 Days	MH
Pool Cross-Connect Valves	4	RB	ESF	100 Days	MH
Vent Line Temperature Element	8	CV	ESF	100 Days	EH
Condensate Drain Temperature Element	4	CV	ESF	100 Days	EH
Steam Piping Diff Pressure Transmitter	8	CV	ESF	100 Days	EH
Condensate Drain Diff Pressure Transmitter	8	CV	ESF	100 Days	EH
Electrical Modules and Cable	All	CV, RB	ESF	100 Days	EH
C11 Rod Control and Information System					
Electrical Modules and Cable	All	CB, RB	ESF	72 hr	EH
C12 Control Rod Drive System					
HCU Scram Solenoid Pilot Valve	135	RB	ESF	72 hr	MH
FMCRD Passive Holding Brake	269	CV	ESF	72 hr	MH

Table 3.11-1

Electrical and Mechanical Equipment for Environmental Qualification

Components	Quantity	Location (note 1)	Function (note 2)	Required Operation Time (note 3)	Qualification Program (note 4)
FMCRD Separation Switch	538	CV	ESF	72 hr	EH
Charging Water Header Pressure Transmitter	4	RB	ESF	72 hr	EH
Electrical Modules and Cable	All	CV, RB	ESF	72 hr	EH
High Pressure CRD Makeup Line Isolation Valves	2	RB	ESF	72 hr	MH
Backup Scram Valve Solenoids	2	RB	ESF	72 hr	EH
C21 Leak Detection and Isolation System					
Pressure Transmitters	All	CV, RB, CB	ESF	100 Days	EH
Temperature Sensors	All	CV, RB, CB	ESF	100 Days	EH
Electrical Modules and Cable	All	CV, RB, CB	ESF	100 Days	EH
C31 Feedwater Control System					
Electric Modules and Cable	All	CB, RB	ESF	72 hr	EH
C51 Neutron Monitoring System					
Detector and Tube Assembly	All	CV	ESF	72 hr	MH
Electrical Modules and Cable	All	CV, RB, CB	ESF	100 Days	EH
C61 Remote Shutdown System					
Electrical Panels, Modules and Cable	All	RB	ESF	100 Days	C

Table 3.11-1

Electrical and Mechanical Equipment for Environmental Qualification

Components	Quantity	Location (note 1)	Function (note 2)	Required Operation Time (note 3)	Qualification Program (note 4)
C63 Safety-Related Distributed Control and Information System (DCIS)					
Electrical Modules and Cable	All	RB, CB	ESF	100 Days	C
C71 Reactor Protection System					
Electrical Modules and Cable	All	CB, RB	ESF	100 Days	EH
C72 Diverse Protection System					
Electrical Modules and Cable	All	CB, RB, TB	ESF, ISOL	100 Days	EH
C74 Safety System Logic and Control					
Electrical Modules and Cable	All	CB, RB	ESF	100 Days	EH
C41 Standby Liquid Control System					
Isolation Check Valves	4	CV, RB	PB	100 days	MH
Squib Injection Valves	4	RB	ESF	72 hr	MH
Injection Shut-Off Valves Actuator	4	RB	ESF	100 Days	EH
Nitrogen Charging Globe Valve	2	RB	ESF	100 Days	MH
Nitrogen Charging Globe Valve Actuator	2	RB	ESF	100 Days	EH
Nitrogen Charging Check Valve	2	RB	ESF	72 hr	MH
Accumulator Depressurization Valves	4	RB	ESF	100 Days	MH
Accumulator Depressurization Valves Actuator	4	RB	ESF	100 Days	EH
Accumulator Relief Valve	2	RB	ESF	72 hr	MH

Table 3.11-1

Electrical and Mechanical Equipment for Environmental Qualification

Components	Quantity	Location (note 1)	Function (note 2)	Required Operation Time (note 3)	Qualification Program (note 4)
Injection Shut Off Valves	4	RB	ESF	100 Days	MH
Accumulator Level Instrumentation	8	RB	ESF	100 Days	EH
Accumulator Pressure Instrumentation	8	RB	ESF	100 Days	EH
Electrical Modules and Cable	All	CV, RB	ESF	100 Days	EH
D11 Process Radiation Monitoring System					
Isolation Valves	4	CV, RB, CB	ESF	100 Days	MH
Radiation Monitors, Sensors, Electrical Modules and Cable	All	CV, RB, CB	ESF	100 Days	EH
E50 Gravity-Driven Cooling System (GDCS)					
GDCS Pool Level Instrumentation	12	CV	ESF	100 Days	EH
GDCS Squib Valve to GDCS Pool	8	CV	ESF	72 hr	MH
GDCS Check Valve to GDCS Pool	8	CV	ESF	72 hr	MH
GDCS Squib Valve to Suppression Pool	4	CV	ESF	72 hr	MH
GDCS Check Valve to Suppression Pool	4	CV	ESF	72 hr	MH
GDCS Squib Valve to Lower Drywell (DW)	12	CV	ESF	72 hr	MH
Electrical Modules and Cable	All	CV, RB, CB	ESF	100 Days	EH

Table 3.11-1

Electrical and Mechanical Equipment for Environmental Qualification

Components	Quantity	Location (note 1)	Function (note 2)	Required Operation Time (note 3)	Qualification Program (note 4)
G21 Fuel and Auxiliary Pools Cooling System					
Containment Isolation Valve (CIV) - Drywell Spray - Outboard	1	RB	PB	100 Days	MH
CIV - Drywell Spray - Inboard	1	CV	PB	100 Days	MH
CIV – Suppression Pool Cooling (SPC) Suction - Outboard	4	RB	PB	100 Days	MH
CIV - SPC Return - Outboard	2	RB	PB	100 Days	MH
CIV - SPC Return - Inboard	2	CV	PB	100 Days	MH
CIV - GDCS Suction - Outboard	1	RB	PB	100 Days	MH
CIV - GDCS Suction - Inboard	1	CV	PB	100 Days	MH
CIV - GDCS Return - Outboard	1	RB	PB	100 Days	MH
CIV - GDCS Return - Inboard	1	CV	PB	100 Days	MH
LPCI Isolation	4	FB, RB	PB	100 Days	MH
IC/PCCS Pool Level Instrumentation	All	RB	ESF	100 Days	EH
Fuel Pool Level Instruments	2	FB	ESF	100 Days	EH
Electrical Modules and Cable	All	CV, FB, RB, CB	ESF	100 Days	EH
G31 Reactor Water Cleanup/Shutdown Cooling System					
CIV - Mid Vessel - Inboard	2	CV	PB, ISOL	100 Days	MH

Table 3.11-1

Electrical and Mechanical Equipment for Environmental Qualification

Components	Quantity	Location (note 1)	Function (note 2)	Required Operation Time (note 3)	Qualification Program (note 4)
CIV - Mid Vessel - Outboard	2	RB	PB, ISOL	100 Days	MH
CIV - Mid Vessel - Inboard Operator	2	CV	ISOL	72 hr	EH
CIV - Mid Vessel - Outboard Operator	2	RB	ISOL	72 hr	EH
CIV - Bottom Drain Inboard	2	CV	PB, ISOL	100 Days	MH
CIV - Bottom Drain Outboard	2	RB	PB, ISOL	100 Days	MH
CIV - Bottom Drain Inboard Operator	2	CV	ISOL	72 hr	EH
CIV - Bottom Drain Outboard Operator	2	RB	ISOL	72 hr	EH
CIV - Process Sampling Line -Inboard	2	CV	PB, PAMS	100 Days	MH
CIV - Process Sampling Line -Outboard	2	RB	PB, PAMS	100 Days	MH
CIV - Process Sampling Line -Inboard Operator	2	CV	ISOL, PAM	100 Days	EH
CIV - Process Sampling Line -Outboard Operator	2	RB	ISOL, PAM	100 Days	EH
Return Line Shutoff Valve	2	RB	ISOL	100 Days	MH
Check Valve to Feedwater	4	RB	ISOL	100 Days	MH
Mid-vessel Flow Instrumentation	All	CV	ISOL	100 Days	EH
Mid-vessel Temperature Instrumentation	All	CV	ISOL	100 Days	EH
Bottom Drain Flow Instrumentation	All	CV	ISOL	100 Days	EH

Table 3.11-1

Electrical and Mechanical Equipment for Environmental Qualification

Components	Quantity	Location (note 1)	Function (note 2)	Required Operation Time (note 3)	Qualification Program (note 4)
Bottom Drain Temperature Instrumentation	All	CV	ISOL	100 Days	EH
Return Line Flow Instrumentation	All	RB	ISOL	100 Days	EH
Return Line Temperature Instrumentation	All	RB	ISOL	100 Days	EH
Overboard Flow Instrumentation	All	RB	ISOL	100 Days	EH
Overboard Temperature Instrumentation	All	RB	ISOL	100 Days	EH
Electrical Modules and Cables	All	CV, RB	ESF	100 Days	EH
H11 Main Control Room (MCR) Panels					
Panels, Modules and Cables	All	CB	ESF	100 Days	C
H12 MCR Back Room Panels					
Panels, Modules and Cable	All	CB	ESF	100 Days	C
H21 Local Panels and Racks					
Panels, Modules and Cable	All	ALL	ESF	100 Days	EH
N21 Condensate and Feedwater System					
Feed Line Temperature Element	All	ST	ESF	100 Days	EH
Feed Piping Diff Pressure Transmitter	All	ST	ISOL	100 Days	EH
Electrical Modules and Cable	All	ST, CB	ESF	100 Days	EH
P10 Makeup Water System					
Isolation Valves	All	CV, RB	ISOL	100 Days	MH

Table 3.11-1

Electrical and Mechanical Equipment for Environmental Qualification

Components	Quantity	Location (note 1)	Function (note 2)	Required Operation Time (note 3)	Qualification Program (note 4)
P25 Chilled Water System					
Isolation Valves	All	CV, RB	ISOL	100 Days	MH
P51 Service Air System					
Isolation Valves	All	CV, RB	ISOL	100 Days	MH
P54 High Pressure Nitrogen Supply System					
Isolation Valves	4	CV, RB	ISOL	100 Days	MH
R10 Electrical Power Distribution System (EPDS)					
Cable and Supports	All	CB, FB, RB	ESF	100 Days	EH
R13 Uninterruptible AC Power Supply					
Electrical Modules and Cable	All	CV, CB, RB	ESF	100 Days	EH
R16 Direct Current Power Supply					
Divisional 250 VDC Battery	8	RB	ESF	100 Days	E
Divisional 250 VDC Normal/Standby Battery Charger	12	RB	ESF	100 Days	E
Divisional 250 VDC Power Center	8	RB	ESF	100 Days	E
Divisional 250 VDC Transfer Switch Box	8	RB	ESF	100 Days	E
Isolation Power Center Normal Main Circuit Breaker	4	RB	ISOL	100 Days	E
Isolation Power Center Alternate Main Circuit Breaker	4	RB	ISOL	100 Days	E

Table 3.11-1

Electrical and Mechanical Equipment for Environmental Qualification

Components	Quantity	Location (note 1)	Function (note 2)	Required Operation Time (note 3)	Qualification Program (note 4)
Isolation Power Center Supply Breaker to Division 250 VDC Normal Battery Charger	12	RB	ISOL	100 Days	E
Electrical Modules and Cable	All	CV, CB, RB, TB	ESF	100 Days	E
R31 Raceway System					
Electrical Penetrations	All	CV	PB	100 Days	EH
Conduit, Cable Trays and Supports	All	CV, CB, RB, TB, FB	ESF	100 Days	EH
T10 Containment System					
Vacuum Breakers	3	CV	ESF	100 Days	MH
Vacuum Breaker Isolation Valves	3	CV	ESF	72 hr	MH
Instrumentation and Cables	All	CV	ESF	100 Days	EH
Basemat Internal Melt Arrest Coolability (BiMAC) Temperature Element	ALL	CV	ESF	100 Days	EH
BiMAC Temperature Switch	ALL	CV	ESF	100 Days	EH
T15 Passive Containment Cooling System					
Vent Fan Check Valves	6	CV	ESF	100 Days	MH
Passive Containment Cooling System (PCCS) Vent Fan	6	CV	ESF	100 Days	EH
T31 Containment Inerting System					
Isolation Valve	10	CV, RB	ISOL	100 Days	MH

Table 3.11-1

Electrical and Mechanical Equipment for Environmental Qualification

Components	Quantity	Location (note 1)	Function (note 2)	Required Operation Time (note 3)	Qualification Program (note 4)
Electrical Modules and Cable	All	CB, RB	ESF	100 Days	EH
T49 Passive Autocatalytic Recombiner System					
Passive Autocatalytic Recombiners	ALL	CV	ESF	100 Days	MH
T62 Containment Monitoring System					
Containment Isolation Valves	All	CV, RB	ISOL	100 Days	MH
Electrical Modules and Cable	All	CB, CV, RB	ESF	100 Days	EH
Drywell Pressure Transmitters	All	RB	ESF	100 days	EH
Differential Pressure Transmitters	All	RB	ESF	100 days	EH
Suppression Pool Temperature Element	All	CV	ESF	100 days	EH
Lower DW Level Transmitter	All	RB	ESF, PAMS	100 days	EH
Suppression Pool Level Transmitters	All	RB	PAMS	100 days	EH
Suppression Pool Pressure Transmitters	All	RB	PAMS	100 days	EH
Hydrogen Analyzers	All	RB	ESF, PAMS	100 days	EH
Oxygen Analyzers	All	RB	ESF, PAMS	100 days	EH
U40 Reactor Building HVAC					
Building Isolation Dampers	All	RB	ESF	100 Days	EH
Electrical Modules and Cable	All	RB	ESF	100 Days	EH

Table 3.11-1

Electrical and Mechanical Equipment for Environmental Qualification

Components	Quantity	Location (note 1)	Function (note 2)	Required Operation Time (note 3)	Qualification Program (note 4)
U77 Control Building HVAC					
Control Room Habitability Area (CRHA) Supply Air Isolation Dampers	All	CB	ESF	100 Days	E
Emergency Filter Unit (EFU) Downstream Isolation Dampers	All	CB	ESF	100 Days	E
CRHA Restroom Exhaust Isolation Dampers	All	CB	ESF	100 Days	E
CRHA Smoke Purge Intake Isolation Dampers	All	CB	ESF	100 Days	E
CRHA Smoke Purge Exhaust Isolation Dampers	All	CB	ESF	100 Days	E
Emergency Filter Unit (EFU)	All	CB	ESF	100 Days	E
Electrical Modules and Cable	All	CB	ESF	100 Days	E
U98 Fuel Building HVAC					
Fuel Building General Area HVAC Subsystem (FBGAVS) Building Supply Air Isolation Dampers	All	FB	ESF	100 Days	EH
FBGAVS Building Exhaust Air Isolation Dampers	All	FB	ESF	100 Days	EH
Fuel Building Fuel Pool Area HVAC Subsystem (FBFPVS) Building Supply Air Isolation Dampers	All	FB	ESF	100 Days	EH
FBFPVS Building Exhaust Air Isolation Dampers	All	FB	ESF	100 Days	EH

Table 3.11-1

Electrical and Mechanical Equipment for Environmental Qualification

Components	Quantity	Location (note 1)	Function (note 2)	Required Operation Time (note 3)	Qualification Program (note 4)
Electrical Modules and Cable	All	FB	ESF	100 Days	EH

Note 1: CV – Containment Vessel
ST – Steam Tunnel
RB – Reactor Building
FB – Fuel Building
CB – Control Building
TB – Turbine Building
OO – Outdoors Onsite
When multiple locations are listed, information in this table applies to equipment in all locations listed that also meets the other criteria shown.

Note 2: ESF – Engineered Safety Feature
PAMS – Post Accident Monitoring
ISOL – Containment Isolation
PB – Primary Pressure Boundary
When multiple functions are listed, information in this table applies to equipment associated with either function that also meets the other criteria shown.

Note 3: Required operation time refers to the period of time which the equipment must remain available or operational. Required operation times apply to equipment when all criteria shown in the first four columns of the table are met.

Note 4: E – Electrical Equipment Program
M – Mechanical Equipment Program
C – Computer Based I&C System Program
H – Harsh Environment (omission of H indicates Mild Environment)
Qualification program classifications apply to equipment when all criteria shown in the first four columns of the table are met.

Note 5: Valve operators/actuators are considered to be part of the valve assembly and are generally not listed separately in this table.