GE Hitachi Nuclear Energy

26A6642AJ
Revision 7
March 2010

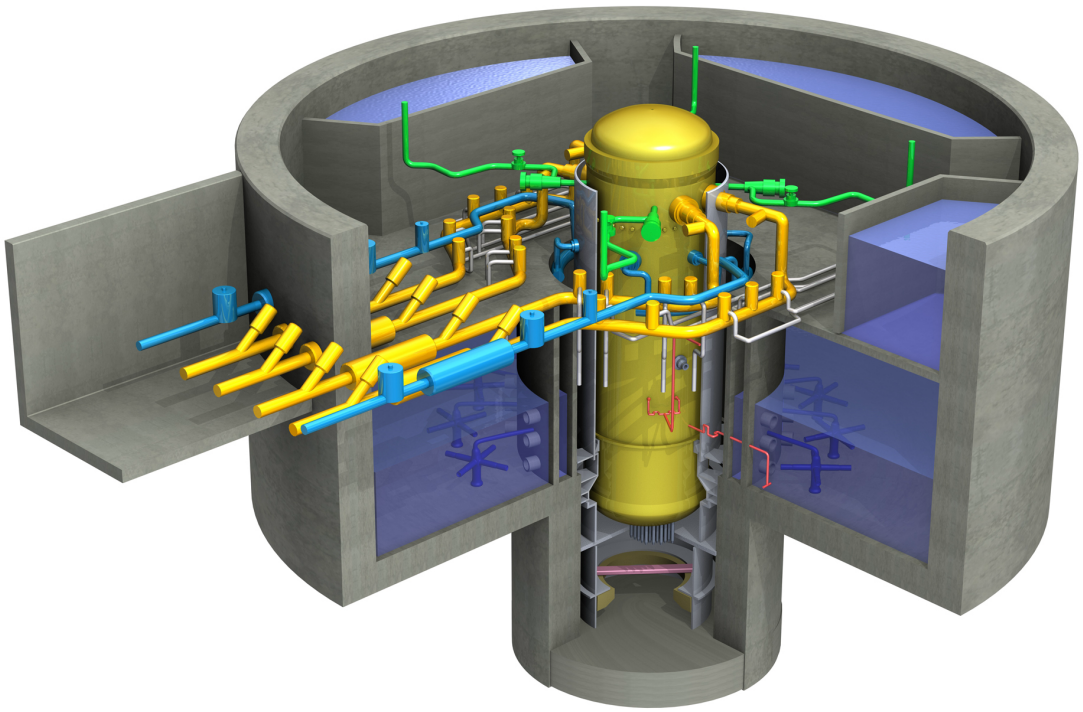

ESBWR Design Control Document
Tier 2

Chapter 3
Design of Structures, Components, Equipment, and Systems
Sections 3.1 – 3.8

Contents

3. DESIGN OF STRUCTURES, COMPONENTS, EQUIPMENT, AND SYSTEMS 3.1-1
3.1 CONFORMANCE WITH NRC GENERAL DESIGN CRITERIA 3.1-1
3.1.1 Group I — Overall Requirements 3.1-1
3.1.1.1 Criterion 1 — Quality Standards and Records 3.1-1
3.1.1.2 Criterion 2 — Design Bases for Protection Against Natural Phenomena 3.1-2
3.1.1.3 Criterion 3 — Fire Protection 3.1-4
3.1.1.4 Criterion 4 — Environmental and Dynamic Effects Design Bases 3.1-5
3.1.1.5 Criterion 5 — Sharing of Structures, Systems, and Components 3.1-7
3.1.2 Group II — Protection by Multiple Fission Product Barriers 3.1-8
3.1.2.1 Criterion 10 — Reactor Design 3.1-8
3.1.2.2 Criterion 11 — Reactor Inherent Protection 3.1-8
3.1.2.3 Criterion 12 — Suppression of Reactor Power Oscillations 3.1-9
3.1.2.4 Criterion 13 — Instrumentation and Control 3.1-10
3.1.2.5 Criterion 14 — Reactor Coolant Pressure Boundary 3.1-12
3.1.2.6 Criterion 15 — Reactor Coolant System Design 3.1-13
3.1.2.7 Criterion 16 — Containment Design 3.1-14
3.1.2.8 Criterion 17 — Electric Power Systems 3.1-15
3.1.2.9 Criterion 18 — Inspection and Testing of Electric Power Systems 3.1-17
3.1.2.10 Criterion 19 — Control Room 3.1-18
3.1.3 Group III — Protection and Reactivity Control Systems 3.1-19
3.1.3.1 Criterion 20 — Protection System Functions 3.1-19
3.1.3.2 Criterion 21 — Protection System Reliability and Testability 3.1-20
3.1.3.3 Criterion 22 — Protection System Independence 3.1-21
3.1.3.4 Criterion 23 — Protection System Failure Modes 3.1-22
3.1.3.5 Criterion 24 — Separation of Protection and Control Systems 3.1-23
3.1.3.6 Criterion 25 — Protection System Requirements for Reactivity Control Malfunctions 3.1-23
3.1.3.7 Criterion 26 — Reactivity Control System Redundancy and Capability 3.1-24
3.1.3.8 Criterion 27 — Combined Reactivity Control Systems Capability 3.1-26
3.1.3.9 Criterion 28 — Reactivity Limits 3.1-27
3.1.3.10 Criterion 29 — Protection Against Anticipated Operational Occurrences 3.1-28
3.1.4 Group IV — Fluid Systems 3.1-29
3.1.4.1 Criterion 30 — Quality of Reactor Coolant Pressure Boundary 3.1-29
3.1.4.2 Criterion 31 — Fracture Prevention of Reactor Coolant Pressure Boundary 3.1-30
3.1.4.3 Criterion 32 — Inspection of Reactor Coolant Pressure Boundary 3.1-31
3.1.4.4 Criterion 33 — Reactor Coolant Makeup 3.1-32
3.1.4.5 Criterion 34 — Residual Heat Removal 3.1-32
3.1.4.6 Criterion 35 — Emergency Core Cooling 3.1-33
3.1.4.7 Criterion 36 — Inspection of Emergency Core Cooling System 3.1-35
3.1.4.8 Criterion 37 — Testing of Emergency Core Cooling System 3.1-36
3.1.4.9 Criterion 38 — Containment Heat Removal 3.1-37
3.1.4.10 Criterion 39 — Inspection of Containment Heat Removal System 3.1-38
3.1.4.11 Criterion 40 — Testing of Containment Heat Removal System 3.1-39
3.1.4.12 Criterion 41 — Containment Atmosphere Cleanup 3.1-40

3.1.4.13 Criterion 42 — Inspection of Containment Atmosphere Cleanup Systems . 3.1-41
3.1.4.14 Criterion 43 — Testing of Containment Atmosphere Cleanup Systems 3.1-41
3.1.4.15 Criterion 44 — Cooling Water 3.1-42
3.1.4.16 Criterion 45 — Inspection of Cooling Water System 3.1-43
3.1.4.17 Criterion 46 — Testing of Cooling Water System 3.1-43
3.1.5 Group V — Reactor Containment 3.1-44
3.1.5.1 Criterion 50 — Containment Design Basis 3.1-44
3.1.5.2 Criterion 51 — Fracture Prevention of Containment Pressure Boundary 3.1-45
3.1.5.3 Criterion 52 — Capability for Containment Leakage Rate Testing 3.1-46
3.1.5.4 Criterion 53 — Provisions for Containment Testing and Inspection 3.1-46
3.1.5.5 Criterion 54 — Piping Systems Penetrating Containment 3.1-47
3.1.5.6 Criterion 55 — Reactor Coolant Pressure Boundary Penetrating Containment 3.1-48
3.1.5.7 Criterion 56 — Primary Containment Isolation 3.1-49
3.1.5.8 Criterion 57 — Closed System Isolation Valves 3.1-50
3.1.6 Group VI — Fuel and Radioactivity Control 3.1-50
3.1.6.1 Criterion 60 — Control of Releases of Radioactive Materials to the Environment 3.1-50
3.1.6.2 Criterion 61 — Fuel Storage and Handling and Radioactivity Control 3.1-51
3.1.6.3 Criterion 62 — Prevention of Criticality in Fuel Storage and Handling 3.1-52
3.1.6.4 Criterion 63 — Monitoring Fuel and Waste Storage 3.1-53
3.1.6.5 Criterion 64 — Monitoring Radioactivity Releases 3.1-54
3.1.7 COL Information 3.1-55
3.2 CLASSIFICATION OF STRUCTURES, SYSTEMS AND COMPONENTS 3.2-1
3.2.1 Seismic Classification 3.2-1
3.2.2 System Quality Group Classification 3.2-2
3.2.2.1 Quality Group A 3.2-2
3.2.2.2 Quality Group B 3.2-2
3.2.2.3 Quality Group C 3.2-3
3.2.2.4 Quality Group D 3.2-4
3.2.3 Safety Classification 3.2-4
3.2.3.1 Safety Class 1 ..... 3.2-5
3.2.3.2 Safety Class 2 ..... 3.2-5
3.2.3.3 Safety Class 3 ..... 3.2-6
3.2.3.4 NonSafety-Related 3.2-7
3.2.4 COL Information 3.2-7
3.2.5 References 3.2-8
3.3 WIND AND TORNADO LOADINGS 3.3-1
3.3.1 Wind Loadings 3.3-1
3.3.1.1 Design Wind Velocity and Recurrence Interval 3.3-1
3.3.1.2 Determination of Applied Forces 3.3-1
3.3.1.3 Effect of Failures of Structures or Components Not Designed for Wind Loads 3.3-1
3.3.2 Tornado Loadings 3.3-2
3.3.2.1 Applicable Design Parameters 3.3-2
3.3.2.2 Determination of Forces on Structures 3.3-2

3.3.2.3 Effect of Failures of Structures or Components Not Designed for Tornado Loads 3.3-2
3.3.3 References 3.3-3
3.4 WATER LEVEL (FLOOD) DESIGN 3.4-1
3.4.1 Flood Protection 3.4-1
3.4.1.1 Flood Protection Summary 3.4-2
3.4.1.2 Flood Protection From External Sources 3.4-2
3.4.1.3 Internal Flooding Evaluation Criteria 3.4-3
3.4.1.4 Evaluation of Internal Flooding 3.4-4
3.4.2 Analysis Procedures 3.4-7
3.4.3 COL Information 3.4-8
3.4.4 References 3.4-8
3.5 MISSILE PROTECTION 3.5-1
3.5.1 Missile Selection and Description 3.5-1
3.5.1.1 Internally Generated Missiles (Outside Containment) 3.5-3
3.5.1.2 Internally Generated Missiles (Inside Containment) 3.5-7
3.5.1.3 Turbine Missiles 3.5-8
3.5.1.4 Missiles Generated by Natural Phenomena 3.5-8
3.5.1.5 Site Proximity Missiles (Except Aircraft) 3.5-9
3.5.1.6 Aircraft Hazards 3.5-9
3.5.2 Structures, Systems, and Components to be Protected from Externally Generated Missiles 3.5-9
3.5.3 Barrier Design Procedures 3.5-9
3.5.3.1 Local Damage Prediction 3.5-9
3.5.3.2 Overall Damage Prediction 3.5-10
3.5.3.3 Impact of Failure of Nonsafety-Related Structures, Systems and Components 3.5-10
3.5.4 COL Information 3.5-10
3.5.5 References 3.5-10
3.6 PROTECTION AGAINST DYNAMIC EFFECTS ASSOCIATED WITH THE POSTULATED RUPTURE OF PIPING 3.6-1
3.6.1 Plant Design for Protection Against Postulated Piping Failures in Fluid Systems Inside and Outside of Containment 3.6-1
3.6.1.1 Design Bases 3.6-2
3.6.1.2 Description 3.6-4
3.6.1.3 Design Evaluation 3.6-4
3.6.2 Determination of Break Locations and Dynamic Effects Associated with the Postulated Rupture of Piping 3.6-7
3.6.2.1 Criteria Used to Define Break and Crack Location and Configuration 3.6-8
3.6.2.2 Analytic Methods to Define Blowdown Forcing Functions and Response Models 3.6-16
3.6.2.3 Dynamic Analysis Methods to Verify Integrity and Operability 3.6-18
3.6.2.4 Guard Pipe Assembly Design 3.6-24
3.6.2.5 [Pipe Break Analysis Results and Protection Methods 3.6-24
3.6.2.6 Analytic Methods to Define Blastwave Interaction to SSCs 3.6-25
3.6.3 (Deleted) 3.6-26

3.6.3.1 (Deleted) 3.6-26
3.6.3.2 (Deleted) 3.6-26
3.6.4 As-built Inspection of High-Energy Pipe Break Mitigation Features 3.6-26
3.6.5 COL Information 3.6-26
3.6.6 References 3.6-26
3.7 SEISMIC DESIGN 3.7-1
3.7.1 Seismic Design Parameters 3.7-2
3.7.1.1 Design Ground Motion 3.7-2
3.7.1.2 Percentage of Critical Damping Values 3.7-6
3.7.1.3 Supporting Media for Category I Structures 3.7-6
3.7.2 Seismic System Analysis 3.7-6
3.7.2.1 Seismic Analysis Methods 3.7-6
3.7.2.2 Natural Frequencies and Responses 3.7-10
3.7.2.3 Procedures Used for Analytical Modeling 3.7-11
3.7.2.4 Soil-Structure Interaction 3.7-12
3.7.2.5 Development of Floor Response Spectra 3.7-12
3.7.2.6 Three Components of Earthquake Motion 3.7-13
3.7.2.7 Combination of Modal Responses 3.7-14
3.7.2.8 Interaction of Non-Category I Structures with Seismic Category I Structures 3.7-16
3.7.2.9 Effects of Parameter Variations on Floor Response Spectra 3.7-19
3.7.2.10 Use of Equivalent Vertical Static Factors 3.7-19
3.7.2.11 Methods Used to Account for Torsional Effects 3.7-20
3.7.2.12 Comparison of Responses 3.7-20
3.7.2.13 Analysis Procedure for Damping 3.7-20
3.7.2.14 Determination of Seismic Category I Structure Overturning Moments 3.7-22
3.7.3 Seismic Subsystem Analysis 3.7-23
3.7.3.1 Seismic Analysis Methods 3.7-23
3.7.3.2 Determination of Number of Earthquake Cycles 3.7-23
3.7.3.3 Procedures Used for Analytical Modeling 3.7-24
3.7.3.4 Basis for Selection of Frequencies 3.7-25
3.7.3.5 Analysis Procedure for Damping 3.7-26
3.7.3.6 Three Components of Earthquake Motion 3.7-26
3.7.3.7 Combination of Modal Responses 3.7-26
3.7.3.8 Interaction of Other Systems with Seismic Category I Systems 3.7-26
3.7.3.9 Multiple-Supported Equipment and Components with Distinct Inputs 3.7-26
3.7.3.10 Use of Equivalent Vertical Static Factors 3.7-27
3.7.3.11 Torsional Effects of Eccentric Masses 3.7-28
3.7.3.12 Effect of Differential Building Movements 3.7-28
3.7.3.13 Seismic Category I Buried Piping, Conduits and Tunnels 3.7-28
3.7.3.14 Methods for Seismic Analysis of Seismic Category I Concrete Dams 3.7-30
3.7.3.15 Methods for Seismic Analysis of Above-Ground Tanks 3.7-30
3.7.3.16 Design of Small Branch and Small Bore Piping 3.7-31
3.7.3.17 Interaction of Other Piping with Seismic Category I Piping 3.7-32
3.7.4 Seismic Instrumentation 3.7-33
3.7.4.1 Comparison with Regulatory Guide 1.12 ..... 3.7-34

3.7.4.2 Location and Description of Instrumentation 3.7-34
3.7.4.3 Control Room Operator Notification 3.7-35
3.7.4.4 Comparison of Measured and Predicted Responses 3.7-35
3.7.4.5 In-Service Surveillance 3.7-36
3.7.5 Site-Specific Information 3.7-36
3.7.6 References 3.7-36
3.8 SEISMIC CATEGORY I STRUCTURES 3.8-1
3.8.1 Concrete Containment 3.8-1
3.8.1.1 Description of the Containment 3.8-1
3.8.1.2 Applicable Codes, Standards, and Specifications 3.8-3
3.8.1.3 Loads and Load Combinations 3.8-4
3.8.1.4 Design and Analysis Procedures 3.8-6
3.8.1.5 Structural Acceptance Criteria 3.8-10
3.8.1.6 Material, Quality Control and Special Construction Techniques 3.8-11
3.8.1.7 Testing and In-service Inspection Requirements 3.8-13
3.8.2 Steel Components of the Reinforced Concrete Containment 3.8-17
3.8.2.1 Description of the Steel Containment Components 3.8-17
3.8.2.2 Applicable Codes, Standards, Specifications and Regulatory Guides 3.8-19
3.8.2.3 Loads and Load Combinations 3.8-20
3.8.2.4 Design and Analysis Procedures 3.8-20
3.8.2.5 Structural Acceptance Criteria 3.8-22
3.8.2.6 Materials, Quality Control, and Special Construction Techniques 3.8-22
3.8.2.7 Testing and In-service Inspection Requirements 3.8-23
3.8.3 Concrete and Steel Internal Structures of the Concrete Containment 3.8-24
3.8.3.1 Description of the Internal Structures 3.8-24
3.8.3.2 Applicable Codes, Standards, and Specifications 3.8-26
3.8.3.3 Loads and Load Combinations 3.8-26
3.8.3.4 Design and Analysis Procedures 3.8-27
3.8.3.5 Structural Acceptance Criteria 3.8-28
3.8.3.6 Materials, Quality Control, and Special Construction Techniques 3.8-29
3.8.3.7 Testing and In-service Inspection Requirements 3.8-31
3.8.3.8 Welding Methods and Acceptance Criteria for Structural and Building Steel 3.8-32
3.8.4 Other Seismic Category I Structures 3.8-32
3.8.4.1 Description of the Structures 3.8-33
3.8.4.2 Applicable Codes, Standards, and Specifications 3.8-36
3.8.4.3 Loads and Load Combinations 3.8-38
3.8.4.4 Design and Analysis Procedures 3.8-41
3.8.4.5 Structural Acceptance Criteria 3.8-42
3.8.4.6 Material, Quality Control and Special Construction Techniques 3.8-43
3.8.4.7 Testing and In-Service Inspection Requirements 3.8-44
3.8.5 Foundations 3.8-44
3.8.5.1 Description of the Foundations 3.8-44
3.8.5.2 Applicable Codes, Standards and Specifications 3.8-45
3.8.5.3 Loads and Load Combinations 3.8-45
3.8.5.4 Design and Analysis Procedures 3.8-45

3.8.5.5 Structural Acceptance Criteria 3.8-47
3.8.5.6 Materials, Quality Control, and Special Construction Techniques 3.8-48
3.8.5.7 Testing and In-Service Inspection Requirements 3.8-48
3.8.6 Special Topics 3.8-48
3.8.6.1 Foundation Waterproofing 3.8-48
3.8.6.2 Site-Specific Physical Properties and Foundation Settlement 3.8-49
3.8.6.3 Structural Integrity Pressure Result 3.8-49
3.8.6.4 Identification of Seismic Category I Structures 3.8-49
3.8.6.5 Foundation Mud Mat 3.8-49
3.8.7 References 3.8-50

List of Tables

Table 3.2-1 Classification Summary 3.2-9
Table 3.2-2 Minimum Safety Class Requirements 3.2-52
Table 3.2-3 Quality Group Designations – Codes and Industry Standards 3.2-53
Table 3.4-1 Structures, Penetrations and Access Openings Designed for Flood Protection 3.4-9
Table 3.5-1 Requirement for the Probability of Missile Generation for ESBWR Standard Plant 3.5-12
Table 3.6-1 Safety-Related Systems, Components, and Equipment for Postulated Pipe Failures Inside Containment 3.6-27
Table 3.6-2 Safety-Related Systems, Components, and Equipment for Postulated Pipe Failures Outside Containment 3.6-28
Table 3.6-3 High and Moderate Energy Piping Inside Containment 3.6-29
Table 3.6-4 High and Moderate Energy Piping Outside Containment 3.6-30
Table 3.6-5 Terminal Pipe End Breaks at RPV Nozzles – High Energy Piping Systems 3.6-31
Table 3.6-6 Terminal Pipe End Breaks Outside Containment – High Energy Piping Systems 3.6-33
Table 3.6-7 Terminal End Breaks at Containment Penetrations (Inside and Outside the Drywell) 3.6-35
Table 3.7-1 Damping Values for SSE Dynamic Analysis 3.7-38
[*Table 3.7-2 5%-Damped Target Spectra of Single Envelope Design Ground Motion at Foundation Level* 3.7-39
[*Table 3.7-3 Summary of Methods of Seismic Analysis for Primary Building Structures* 3.7-40
[*Table 3.8-1 Key Dimensions of Concrete Containment* 3.8-51
[*Table 3.8-2 Load Combinations, Load Factors and Acceptance Criteria for the Reinforced Concrete Containment*(1),(2),(3),(7) 3.8-52
[*Table 3.8-3 Major Allowable Stresses in Concrete and Reinforcing Steel* 3.8-53
[*Table 3.8-4 Load Combination, Load Factors and Acceptance Criteria for Steel Containment Components of the RCCV* (1), (2), (3) 3.8-54
[*Table 3.8-5 Welding Activities and Weld Examination Requirements for Containment Vessel* 3.8-56
[*Table 3.8-6 Codes, Standards, Specifications, and Regulations Used in the Design and Construction of Seismic Category I Internal Structures of the Containment* 3.8-57
[*Table 3.8-7 Load Combination, Load Factors and Acceptance Criteria for Steel Structures Inside the Containment*(1),(2) 3.8-59
[*Table 3.8-8 Key Dimensions of RB, CB, FB, RW and FWSC* 3.8-60
[*Table 3.8-9 Codes, Standards, Specifications, and Regulatory Guides Used in the Design and Construction of Seismic Category I Structures* 3.8-61
[*Table 3.8-10 Temperatures During Operating Conditions (RB)* 3.8-63
[*Table 3.8-11 Temperatures During Operating Conditions (CB)* 3.8-64
[*Table 3.8-12 Temperatures During Operating Conditions (FB)* 3.8-65
[*Table 3.8-13 Key Dimensions of Foundations* 3.8-66
[*Table 3.8-14 Load Combinations and Factor of Safety for Foundation Design* 3.8-67
[*Table 3.8-15 Load Combinations, Load Factors and Acceptance Criteria for the Safety-Related Reinforced Concrete Structures*(1),(2),(3) 3.8-68

[*Table 3.8-16 Load Combinations, Load Factors and Acceptance Criteria for the Safety-Related Steel Structures*[(1),(2),(3)] 3.8-69
Table 3.8-17 PCCS Passages Through RCCV Top Slab 3.8-70
[*Table 3.8-18 Temperatures During Operating Conditions (FWSC)* 3.8-71

List of Illustrations

Figure 3.2-1. Quality Group and Seismic Category Classification Applicable to Power Conversion System 3.2-54
Figure 3.2-2. Quality Group and Seismic Category Classification Applicable to Feedwater System 3.2-55
Figure 3.5-1. Missile Velocity and Displacement Characteristics Resulting from Saturated Steam and Water Blowdowns (7.2 MPa (1044 psia) Stagnation Pressure) 3.5-13
Figure 3.5-2. ESBWR Standard Plant Low-Trajectory Turbine Missile Strike Zone 3.5-14
Figure 3.6-1. Jet Characteristics 3.6-37
Figure 3.6-2. Typical Pipe Whip Restraint Configuration 3.6-38
Figure 3.6-3. Typical Terminal End Break at Containment Penetration 3.6-39
Figure 3.7-1. Horizontal SSE Design Spectra, Generic Site 3.7-42
Figure 3.7-2. Vertical SSE Design Spectra, Generic Site 3.7-43
Figure 3.7-3. Horizontal, H1 Component Time History, Generic Site 3.7-44
Figure 3.7-4. Horizontal, H2 Component Time History, Generic Site 3.7-45
Figure 3.7-5. Vertical, Component Time History, Generic Site 3.7-46
Figure 3.7-6. 2% Damped Response Spectra, H1 Component, Generic Site 3.7-47
Figure 3.7-7. 3% Damped Response Spectra, H1 Component, Generic Site 3.7-48
Figure 3.7-8. 4% Damped Response Spectra, H1 Component, Generic Site 3.7-49
Figure 3.7-9. 5% Damped Response Spectra, H1 Component, Generic Site 3.7-50
Figure 3.7-10. 7% Damped Response Spectra, H1 Component, Generic Site 3.7-51
Figure 3.7-11. 2% Damped Response Spectra, H2 Component, Generic Site 3.7-52
Figure 3.7-12. 3% Damped Response Spectra, H2 Component, Generic Site 3.7-53
Figure 3.7-13. 4% Damped Response Spectra, H2 Component, Generic Site 3.7-54
Figure 3.7-14. 5% Damped Response Spectra, H2 Component, Generic Site 3.7-55
Figure 3.7-15. 7% Damped Response Spectra, H2 Component, Generic Site 3.7-56
Figure 3.7-16. 2% Damped Response Spectra, Vertical Component, Generic Site 3.7-57
Figure 3.7-17. 3% Damped Response Spectra, Vertical Component, Generic Site 3.7-58
Figure 3.7-18. 4% Damped Response Spectra, Vertical Component, Generic Site 3.7-59
Figure 3.7-19. 5% Damped Response Spectra, Vertical Component, Generic Site 3.7-60
Figure 3.7-20. 7% Damped Response Spectra, Vertical Component, Generic Site 3.7-61
Figure 3.7-21. Power Spectral Density Function, H1 Component, Generic Site 3.7-62
Figure 3.7-22. Power Spectral Density Function, H2 Component, Generic Site 3.7-63
Figure 3.7-23. Power Spectral Density Function, Vertical Component, Generic Site 3.7-64
Figure 3.7-24. North Anna ESP Horizontal H1 Target Spectrum at ESBWR CB Base 3.7-65
Figure 3.7-25. North Anna ESP Horizontal H1 Time Histories at ESBWR CB Base 3.7-66
Figure 3.7-26. North Anna ESP Horizontal H2 Target Spectrum at ESBWR CB Base 3.7-67
Figure 3.7-27. North Anna ESP Horizontal H2 Time Histories at ESBWR CB Base 3.7-68
Figure 3.7-28. North Anna ESP Vertical Target Spectrum at ESBWR CB Base 3.7-69
Figure 3.7-29. North Anna ESP Vertical Time Histories at ESBWR CB Base 3.7-70
Figure 3.7-30. North Anna ESP Horizontal H1 Target Spectrum at ESBWR RB/FB Base . 3.7-71
Figure 3.7-31. North Anna ESP Horizontal H1 Time Histories at ESBWR RB/FB Base 3.7-72
Figure 3.7-32. North Anna ESP Horizontal H2 Target Spectrum at ESBWR RB/FB Base . 3.7-73
Figure 3.7-33. North Anna ESP Horizontal H2 Time Histories at ESBWR RB/FB Base 3.7-74

Figure 3.7-34. North Anna ESP Vertical Target Spectrum at ESBWR RB/FB Base 3.7-75
Figure 3.7-35. North Anna ESP Vertical Time Histories at ESBWR RB/FB Base 3.7-76
Figure 3.7-36. Not used. 3.7-77
Figure 3.7-37. Alternative Damping Values for Response Spectra Analysis of ASME B&PV Code, Section III, Division 1 Class 1, 2, and 3, and ASME B31.1 Piping Systems 3.7-78
Figure 3.7-38. Single Envelope Spectrum Match – H1 Component 3.7-79
Figure 3.7-39. Single Envelope Spectrum Match – H2 Component 3.7-80
Figure 3.7-40. Single Envelope Spectrum Match – Vertical Component 3.7-81
Figure 3.7-41. Single Envelope Time Histories – H1 Component 3.7-82
Figure 3.7-42. Single Envelope Time Histories – H2 Component 3.7-83
Figure 3.7-43. Single Envelope Time Histories – Vertical Component 3.7-84
Figure 3.8-1. Configuration of Concrete Containment 3.8-72
Figure 3.8-2. Schematic of Reinforcements in RCCV Wall Around Equipment Hatch/Personnel Airlock Opening 3.8-73
Figure 3.8-3. Typical Internal Containment Plate Support with Embedment Integral with Containment Liner 3.8-74
Figure 3.8-4. Typical External Containment Plate Support with Embedment 3.8-75
Figure 3.8-5. Quencher Anchorage 3.8-76
Figure 3.8-6. RCCV Wall High-Energy Penetration 3.8-77
Figure 3.8-7. RCCV Top Slab Penetration and PCCS Passages 3.8-78
Figure 3.8-8. RCCV Low-Energy Penetration 3.8-79
Figure 3.8-9. RCCV Multiple Penetration 3.8-79
Figure 3.8-10. RCCV Electrical Penetration 3.8-80
Figure 3.8-11. RCCV Spare Penetration 3.8-80
Figure 3.8-12. (Deleted) 3.8-81

3. DESIGN OF STRUCTURES, COMPONENTS, EQUIPMENT, AND SYSTEMS

3.1 CONFORMANCE WITH NRC GENERAL DESIGN CRITERIA

This section contains an evaluation of the principal design criteria of the ESBWR Standard Plant as measured against the Nuclear Regulatory Commission (NRC) General Design Criteria (GDC) for Nuclear Power Plants, 10 CFR 50 Appendix A. The GDC are intended to establish minimum requirements for the principal design criteria for nuclear power plants.

The NRC GDC are intended to guide the design of water-cooled nuclear power plants; separate Boiling Water Reactor (BWR) specific criteria are not addressed. As a result, the criteria are subject to a variety of interpretations. For this reason, in some cases conformance to a particular criterion is not directly measurable. In these cases, the conformance of the ESBWR design to the interpretation of the criteria is discussed. For each criterion, the ESBWR design is specifically assessed and a complete list of references is included to identify where detailed design information pertinent to that criterion is treated in this Design Control Document (DCD).

3.1.1 Group I — Overall Requirements

3.1.1.1 Criterion 1 — Quality Standards and Records

Criterion 1 Statement

Structures, systems, and components important to safety shall be designed, fabricated, erected, and tested to quality standards commensurate with the importance of the safety functions to be performed. Where generally recognized codes and standards are used, they shall be identified and evaluated to determine their applicability, adequacy, and sufficiency and shall be supplemented or modified as necessary to assure a quality product in keeping with the required safety function. A quality assurance program shall be established and implemented in order to provide adequate assurance that these structures, systems and components shall satisfactorily perform their safety functions. Appropriate records of the design, fabrication, erection and testing of structures, systems, and components important to safety shall be maintained by or under the control of nuclear power unit licensee throughout the life of the unit.

Evaluation Against Criterion 1

Safety-related and nonsafety-related Structures, Systems, or Components (SSCs) are identified in Table 3.2-1. The quality assurance program is described in Chapter 17 and applies to the safety-related items. Nonsafety-related items are also controlled by the quality assurance program described in Chapter 17 in accordance with the functional importance of the item. The intent of the quality assurance program is to assure sound engineering in all phases of design and construction through conformity to regulatory requirements and design bases described in the license application. In addition, the quality assurance program assures adherence to specified standards of workmanship and implementation of recognized codes and standards in fabrication and construction. The quality assurance program also includes the observance of proper preoperational and operational testing and maintenance procedures as well as the appropriate documentation. The quality assurance program is responsive to and in conformance with the intent of the quality-related requirements of 10 CFR 50 Appendix B.

SSCs are identified in Section 3.2 with respect to their location, service, and their relationship to the safety-related or nonsafety-related function to be performed. Applicable codes and standards are applied to the equipment commensurate with their safety-related function.

Documents are maintained to demonstrate that the requirements of the quality assurance program are satisfied. This documentation shows that appropriate codes, standards, and regulatory requirements are identified, correct materials are specified, correct procedures are utilized, qualified personnel are provided, and the finished parts and components meet the applicable specifications. These records are available so that any desired item of information is retrievable for reference. These records are maintained for the life of the operating licenses.

The quality program and records meet Criterion 1. For further discussion, see the following sections:

Chapter/ Section	Title
3.2	Classification of Structures, Components, and Systems
3.9	Mechanical Systems and Components
3.10	Seismic and Dynamic Qualification of Mechanical and Electrical Equipment
3.11	Environmental Qualification of Mechanical and Electrical Equipment
5	Reactor Coolant System and Connected Systems
6	Engineered Safety Features
Table 7.1-1	I&C Regulatory Requirements Applicability Matrix
9.1.5	Overhead Heavy Load Handling Systems
9.3	Process Auxiliaries
17	Quality Assurance

3.1.1.2 Criterion 2 — Design Bases for Protection Against Natural Phenomena

Criterion 2 Statement

Structures, systems, and components important to safety shall be designed to withstand the effect of natural phenomena such as earthquakes, tornadoes, hurricanes, floods, tsunami, and seiches without loss of capability to perform their safety functions. The design bases for these structures, systems and components shall reflect:

(1) Appropriate consideration of the most severe of the natural phenomena that have been historically reported for the site and surrounding area, with sufficient margin for the limited accuracy, quantity, and period of time in which the historical data have been accumulated;

(2) appropriate combination of the effects of normal and accident conditions with the effects of the natural phenomena; and

(3) the importance of the safety functions to be performed.

Evaluation Against Criterion 2

The ESBWR design is designated as a standard plant, so the design bases for safety-related SSCs may not have been evaluated against the most severe of the natural phenomena that have been historically reported for each possible site and its surrounding area. The envelope of the site-related parameters, which encompass the majority of the potential sites in the contiguous United States is defined in Chapter 2. The design bases for safety-related SSCs reflect this envelope of natural phenomena including appropriate combinations of the effects of normal and accident conditions within this envelope.

The design bases for safety-related SSCs meet the requirements of Criterion 2. Detailed discussions of various phenomena considered and design criteria developed are presented in the following sections:

Chapter/ Section	Title
2.0	Site Characteristics
3.2	Classification of Structures, Systems, and Components
3.3	Wind and Tornado Loadings
3.4	Water Level (Flood) Design
3.5	Missile Protection
3.7	Seismic Design
3.8	Seismic Category I Structures
3.9	Mechanical Systems and Components
3.10	Seismic and Dynamic Qualification of Mechanical and Electrical Equipment
3.11	Environmental Qualification of Mechanical and Electrical Equipment
5.2	Integrity of Reactor Coolant Pressure Boundary
5.4.6	Isolation Condenser System
5.4.7	Residual Heat Removal System
5.4.8	Reactor Water Cleanup/Shutdown Cooling System
6.2.2	Passive Containment Cooling System
6.2.4	Containment Isolation Function
6.3	Emergency Core Cooling Systems
Table 7.1-1	I&C Regulatory Requirements Applicability Matrix
8.1.5.2	Onsite Power
8.3	Onsite Power Systems
9	Auxiliary System
19A	Regulatory Treatment of Non-Safety Systems

3.1.1.3 Criterion 3 — Fire Protection

Criterion 3 Statement

Structures, systems, and components important to safety shall be designed and located to minimize, consistent with other safety requirements, the probability and effect of fires and explosions. Noncombustible and heat-resistant materials shall be used wherever practical throughout the unit, particularly in locations such as the containment and control room. Fire detection and fighting systems of appropriate capacity and capability shall be provided and designed to minimize the adverse effects of fires on structures, systems, and components important to safety. Firefighting systems shall be designed to assure that their rupture or

inadvertent operation does not significantly impair the safety capability of the structures, systems, and components.

Evaluation Against Criterion 3

Fires in the plant are prevented or mitigated by the use of noncombustible and heat-resistant materials such as metal cabinets, metal wireways, high melting point insulation, and flame resistant markers for identification wherever practicable.

Cabling is suitably rated and cable tray loading is designed to avoid unacceptable internal heat buildup. Cable trays are suitably separated to avoid the loss of redundant channels of protective cabling if a fire occurs. The arrangement of equipment in reactor protection channels provides physical separation to limit the effects of fire.

Combustible supplies, such as logs, records, manuals, etc., are limited in such areas as the control room, thus limiting the potential of a fire.

The plant Fire Protection System (FPS) includes the following provisions:

- Automatic fire detection equipment in those areas where fire danger is greatest;
- A trained fire brigade; and
- Suppression services which include suppression systems with automatic actuation with manual override as well as manually-operated fire extinguishers.

The design of the FPS meets the requirements of Criterion 3. For further discussion, see the following sections:

Chapter/ Section	Title
5.4.7	Residual Heat Removal System
9.5.1	Fire Protection System
11.3	Gaseous Waste Management System

3.1.1.4 Criterion 4 — Environmental and Dynamic Effects Design Bases

Criterion 4 Statement

Structures, systems, and components important to safety shall be designed to accommodate the effects of and to be compatible with the environmental conditions associated with normal operation, maintenance, testing, and postulated accidents, including loss-of-coolant-accidents. These structures, systems, and components shall be appropriately protected against dynamic effects, including the effects of missiles, pipe whipping, and discharging fluids that may result from equipment failures and from events and conditions outside the nuclear power unit. However, dynamic effects associated with postulated pipe ruptures in nuclear power plant units may be excluded from the design basis when analyses reviewed and approved by the Commission demonstrate that the probability of fluid system piping rupture is extremely low under conditions consistent with the design basis for the piping.

Evaluation Against Criterion 4

Safety-related SSCs are designed to accommodate the dynamic effects of, and to be compatible with, environmental conditions associated with normal operation, maintenance, and postulated pipe failure accidents including Loss-of-Coolant-Accidents (LOCA).

Safety-related SSCs are appropriately protected against dynamic effects including the effects of missiles, pipe whipping, and discharging fluids that may result from equipment failure. The effects of missiles originating outside the ESBWR Standard Plant are also considered. Design requirements specify the duration that safety-related SSCs must survive the environmental conditions following a LOCA.

The design of safety-related SSCs meets the requirements of Criterion 4. For further discussion, see the following sections:

Chapter/ Section	Title
2.0	Site Characteristics
3.3	Wind and Tornado Loadings
3.4	Water Level (Flood) Design
3.5	Missile Protection
3.6	Protection Against Dynamic Effects Associated with the Postulated Rupture of Piping
3.8	Seismic Category I Structures
3.9	Mechanical Systems and Components
3.10	Seismic and Dynamic Qualification of Mechanical and Electrical Equipment
3.11	Environmental Qualification of Mechanical and Electrical Equipment
4.6	Functional Design of Reactivity Control System
5.2	Integrity of Reactor Coolant Pressure Boundary
5.3	Reactor Vessel
5.4.6	Isolation Condenser System
5.4.7	Residual Heat Removal System
5.4.8	Reactor Water Cleanup/Shutdown Cooling System
6	Engineered Safety Features
Table 7.1-1	I&C Regulatory Requirements Applicability Matrix
8	Electric Power
9	Auxiliary System
10.2.1	Turbine Generator

3.1.1.5 Criterion 5 — Sharing of Structures, Systems, and Components

Criterion 5 Statement

Structures, systems, and components important to safety shall not be shared among nuclear power units unless it can be shown that such sharing does not significantly impair their ability to perform their safety functions, including, in the event of an accident in one unit, an orderly shutdown and cooldown of the remaining units.

Evaluation Against Criterion 5

There are no shared SSCs because the ESBWR Standard Plant is a single-unit station; the requirements of Criterion 5 are met.

3.1.2 Group II — Protection by Multiple Fission Product Barriers

3.1.2.1 Criterion 10 — Reactor Design

Criterion 10 Statement

The reactor core and associated coolant, control, and protection systems shall be designed with appropriate margin to assure that specified acceptable fuel design limits are not exceeded during any condition of normal operation, including the effects of anticipated operational occurrences.

Evaluation Against Criterion 10

The reactor core components consist of fuel assemblies, control rods, in-core ion chambers, neutron sources, and related items. The mechanical design is based on conservative application of stress limits, operating experience, and experimental test results. The fuel is designed to maintain integrity over a complete range of power levels, including anticipated operational occurence (AOO) transient conditions. The core is sized with sufficient heat transfer area and coolant flow to ensure that specified acceptable fuel design limits are not exceeded under normal conditions or AOOs.

The safety-related Reactor Protection System (RPS) is designed to monitor certain reactor parameters, sense abnormalities, and to scram the reactor, thereby preventing specified acceptable fuel design limits from being exceeded. Scram setpoints are based on safety design basis analyses and setpoint methodology. There is no normal operation or AOO condition from which the scram setpoints allow the reactor core to exceed the specified acceptable safety limits.

AOO analyses are presented in Chapter 15. The results show that the minimum critical power ratio does not fall below the safety limit minimum critical power ratio, thereby satisfying the transient design basis.

The reactor core and associated coolant, control, and protection systems are designed to assure that the specified fuel design limits are not exceeded during conditions of normal or abnormal operation and, therefore, meet the requirements of Criterion 10. For further discussion, see the following sections:

Chapter/ Section	Title
3.9	Mechanical Systems and Components
4.3	Nuclear Design
4.4	Thermal and Hydraulic Design
Table 7.1-1	I&C Regulatory Requirements Applicability Matrix
15	Safety Analyses

3.1.2.2 Criterion 11 — Reactor Inherent Protection

Criterion 11 Statement

The reactor core and associated coolant systems shall be designed so that in the power operating range the net effect of the prompt inherent nuclear feedback characteristics tends to compensate for a rapid increase in reactivity.

Evaluation Against Criterion 11

The reactor core is designed to have responses that regulate or dampen changes in power level and spatial distribution of power production to a level consistent with safe and efficient operation.

The inherent dynamic behavior of the core is characterized in terms of:

- Fuel temperature or Doppler reactivity coefficient;
- Moderator void reactivity coefficient; and
- Moderator temperature reactivity coefficient.

The combined effect of these coefficients in the power range is termed the power coefficient.

A negative Doppler reactivity coefficient is maintained for any operating condition. Doppler reactivity feedback occurs simultaneously with a change in fuel temperature and opposes the power change that caused it; it contributes to system stability.

A negative core moderator void reactivity coefficient resulting from boiling in the active flow channels is maintained for any operating condition. The negative void reactivity coefficient provides an inherent negative feedback during power transients. Because of the large negative moderator void reactivity coefficient, the ESBWR has a number of inherent advantages, such as:

- The inherent self-flattening of the radial power distribution;
- The ease of control; and
- The spatial xenon stability.

The reactor is designed so that the moderator temperature reactivity coefficient is negative above hot standby, and the overall power reactivity coefficient is negative, well within the range required for adequate damping of power and spatial xenon disturbances.

The reactor core and associated coolant system are designed so that in the power operating range, prompt inherent dynamic behavior compensates for any rapid increase in reactivity in accordance with Criterion 11. For further discussion, see the following sections:

Chapter/ Section	Title
4.3	Nuclear Design

3.1.2.3 Criterion 12 — Suppression of Reactor Power Oscillations

Criterion 12 Statement

The reactor core and associated coolant, control, and protection systems shall be designed to assure that power oscillations which can result in conditions exceeding specified acceptable fuel design limits are not possible or can be reliably and readily detected and suppressed.

Evaluation Against Criterion 12

The ESBWR is designed to be inherently stable, and in addition, it includes control and protection systems designed to ensure that power oscillations that could result in exceeding

specified acceptable fuel design limits are reliably and readily detected and suppressed. The power reactivity coefficient is the composite simultaneous effect of the fuel temperature or Doppler reactivity coefficient, moderator reactivity void coefficient and moderator temperature reactivity coefficient. The power reactivity coefficient is negative and well within the range required for adequate damping of power and spatial xenon disturbances. Operating experience has shown large BWRs to be inherently stable against xenon induced power instability. The negative reactivity coefficients also provide:

- Good load following with well-damped behavior and little undershoot or overshoot in the heat transfer response; and
- Strong damping of spatial power disturbances.

ESBWR stable operation is developed by establishing sufficiently high natural circulation flow through inherent design features such as shorter length fuel to reduce core pressure drop and the addition of a tall chimney above the core to promote natural circulation. Power fluctuations subject to coupled neutronic-thermal-hydraulic feedback are inherently damped under the high natural circulation flow operating conditions.

The Neutron Monitoring System in conjunction with the RPS design provides further protection from coupled neutronic-thermal-hydraulic instability. Core wide and local oscillations abnormalities are sensed, and, if protection system limits are reached, corrective action is initiated through an automatic scram. High integrity of this protection system is achieved through the combination of logic arrangement, trip channel redundancy, power supply redundancy, and physical separation.

The combination of inherently stable design and the instability detection and suppression systems assure that Criterion 12 is met. For further discussions, see the following sections:

Chapter/ Section	Title
4.3	Nuclear Design
4.4	Thermal and Hydraulic Design
4D	Stability Evaluation
Table 7.1-1	I&C Regulatory Requirements Applicability Matrix

3.1.2.4 Criterion 13 — Instrumentation and Control

Criterion 13 Statement

Instrumentation shall be provided to monitor variables and systems over their anticipated ranges for normal operation, for anticipated operational occurrences, and for accident conditions as appropriate to assure adequate safety, including those variables and systems that can affect the fission process, the integrity of the reactor core, the reactor coolant pressure boundary, and the containment and its associated systems. Appropriate controls shall be provided to maintain these variables and systems within prescribed operating ranges.

Evaluation Against Criterion 13

Modern proven BWR instrumentation and controls are provided in the ESBWR Standard Plant design. The neutron flux in the reactor core is monitored by four subsystems. The Startup Range Neutron Monitor (SRNM) Subsystem measures the flux from startup through 15% power (into the power range). The power range is monitored by many detectors which make up the Local Power Range Monitor (LPRM) Subsystem. The output of these detectors is used in many ways. The output of selected core-wide sets of detectors is averaged to provide a core-average neutron flux. This output is called the Average Power Range Monitor (APRM) Subsystem. The Automated Fixed In-core Probe (AFIP) Subsystem provides a means for calibrating the LPRM. Both the SRNM and APRM Subsystems generate scram trips to the RPS. They also generate rod-block trips.

The RPS protects the fuel barriers and the nuclear process barrier by monitoring plant parameters and causing a reactor scram when predetermined setpoints are exceeded. Separation of the scram and normal rod control function prevents failures in the reactor manual control circuitry from affecting the scram circuitry. To provide protection against the consequences of accidents involving the release of radioactive materials from the fuel and reactor coolant pressure boundary (RCPB), the Leak Detection and Isolation System (LD&IS) initiates automatic isolation of appropriate pipelines whenever monitored variables exceed pre-selected operational limits.

The LD&IS provides instrumentation and controls to detect, annunciate and, in some cases, isolate the RCPB to ensure its integrity. Also see the evaluation of GDC 30.

The Process Radiation Monitoring System (PRMS) monitors radiation levels of various processes and provides trip signals to the LD&IS whenever pre-established limits are exceeded.

Adequate instrumentation has been provided to monitor system variables in the reactor core, RCPB, and reactor containment. Appropriate controls have been provided to maintain the variables in the operating range and to initiate the necessary corrective action in the event of abnormal operational occurrence or accident.

The design of instrumentation and control systems meets the requirements of Criterion 13. For further discussions, see the following sections:

Chapter/ Section	Title
5.4.8	Reactor Water Cleanup/Shutdown Cooling System
6.2	Containment Systems
6.3	Emergency Core Cooling Systems
Table 7.1-1	I&C Regulatory Requirements Applicability Matrix
9	Auxiliary Systems

3.1.2.5 Criterion 14 — Reactor Coolant Pressure Boundary

Criterion 14 Statement

The reactor coolant pressure boundary shall be designed, fabricated, erected, and tested so as to have an extremely low probability of abnormal leakage, of rapidly propagating failure, and of gross rupture.

Evaluation Against Criterion 14

The piping and equipment pressure parts within the RCPB (as defined by Section 50.2 of 10 CFR 50) are designed, fabricated, erected, and tested in accordance with 10 CFR 50.55a to provide a high degree of integrity throughout the plant lifetime. Systems and components within the RCPB are classified as Quality Group A (Subsection 3.2.2.1). The RCPB is protected from overpressure by means of pressure relieving devices. The design requirements and codes and standards applied to this quality group help ensure high integrity in keeping with the safety-related function.

To minimize the possibility of brittle fracture within the RCPB, the fracture toughness properties and the operating temperature of ferritic materials are controlled to ensure adequate toughness. Section 5.2 describes the methods utilized to control toughness properties of the RCPB materials. Materials are to be impact tested in accordance with American Society of Mechanical Engineers Boiler and Pressure Vessel (ASME B&PV) Code Section III, where applicable. Where RCPB piping penetrates the containment, the fracture toughness temperature requirements of the RCPB materials apply.

Piping and equipment pressure parts of the RCPB are assembled and erected by welding unless applicable codes permit flanged or threaded joints. Welding procedures are employed which produce welds of complete fusion that are free of unacceptable defects. All welding procedures, welders, and welding machine operators used in producing pressure containing welds are qualified in accordance with the requirements of the ASME B&PV Code Section IX for the materials to be welded. Qualifications records, including the results of procedure and performance qualification tests and identification symbols assigned to each welder, are maintained.

Section 5.2 contains the detailed material and examination requirements for the piping and equipment of the RCPB prior to and after its assembly and erection. Leakage testing and surveillance is accomplished as described in the evaluation against Criterion 30 of the GDC.

The design, fabrication, erection, and testing of the RCPB help assure an extremely low probability of abnormal leakage, thus satisfying the requirements of Criterion 14. For further discussion, see the following sections:

Chapter/ Section	Title
3	Design of Structures, Components, Equipment, and Systems
5.2	Integrity of Reactor Coolant Pressure Boundary
5.3	Reactor Vessel
5.4.8	Reactor Water Cleanup/Shutdown Cooling System

5.4.12	Reactor Coolant System High Point Vents
6.1	Design Basis Accident Engineered Safety Feature Materials
9.3.2	Process Sampling System

3.1.2.6 Criterion 15 — Reactor Coolant System Design

Criterion 15 Statement

The reactor coolant system and associated auxiliary, control, and protection systems shall be designed with sufficient margin to assure that the design conditions of the reactor coolant pressure boundary are not exceeded during any condition of normal operation, including anticipated operational occurrences.

Evaluation Against Criterion 15

The RCS consists mainly of the reactor vessel and appurtenances, and the Nuclear Boiler System (NBS) including the main steamlines, feedwater lines and pressure-relief discharge system. The Isolation Condenser System (ICS), and portions of the Reactor Water Cleanup/Shutdown Cooling (RWCU/SDC) System, Gravity Driven Cooling System (GDCS), and Control Rod Drive (CRD) System are also part of the RCS.

The auxiliary, control, and protection systems associated with the RCS act to provide sufficient margin to assure that the design conditions of the RCPB are not exceeded during any condition of normal operation, including AOOs. As described in the evaluation of Criterion 13, instrumentation is provided to monitor variables to verify that they are within prescribed operating limits. If the monitored variables exceed their predetermined settings, the auxiliary, control, and protection systems automatically respond to maintain the variables and systems within allowable design limits.

An example of the integrated protective action scheme is the Isolation Condenser System (ICS). Upon receipt of an overpressure signal, the ICS automatically initiates to assure that the design conditions of the RCPB are not exceeded. In addition to the ICS, overpressure protection of the Reactor Pressure Vessel (RPV) system and RCPB is provided by pressure-operated safety relief valves (SRVs) that discharge steam from the main steamlines to the suppression pool. The pressure relief system also provides for automatic depressurization of the RCS in the event of a LOCA in which the vessel is not depressurized by the accident. The depressurization of the RCS in this situation allows operation of the GDCS to supply enough cooling water to adequately cool the core.

In a similar manner, other auxiliary, control, and protection systems provide assurance that the design conditions of the RCPB are not exceeded during any conditions of normal operation, including AOOs, so that Criterion 15 is met. For further discussion, see the following sections:

Chapter/ Section	Title
3	Design of Structure, Components, Equipment, and Systems
5.2.2	Overpressure Protection
5.4.8	Reactor Water Cleanup/Shutdown Cooling System

Table 7.1-1 I&C Regulatory Requirements Applicability Matrix

15 Safety Analyses

3.1.2.7 Criterion 16 — Containment Design

Criterion 16 Statement

Reactor containment and associated systems shall be provided to establish an essentially leak-tight barrier against the uncontrolled release of radioactivity to the environment and to assure that the containment design conditions important to safety are not exceeded for as long as postulated accident conditions require.

Evaluation Against Criterion 16

The Primary Containment System consists of the following major structures and components:

- A leaktight containment vessel encloses the RPV, the RCPB, and other branch connections of the reactor primary coolant system. The containment vessel is a reinforced concrete cylindrical structure with an internal leaktight steel liner providing the primary containment boundary. The containment vessel structure consists of the drywell top slab, cylindrical containment wall, suppression pool floor slab, RPV pedestal, and the basemat. A steel drywell head closes the opening in the top of the containment vessel for servicing and refueling the RPV. The upper drywell encloses the upper portion of the RPV, the major piping systems (main steam, feedwater, GDCS, and ICS lines, SRVs, Depressurization Valves [DPVs]), Drywell Cooling System (DCS), GDCS pools, and other miscellaneous systems. The lower drywell encloses the lower portion of the RPV and encloses the cooling system ducts, fine motion control rod drives (FMCRDs), and other miscellaneous systems as well as providing maintenance space below the RPV.
- The wetwell includes the suppression pool, horizontal vents and airspace above the suppression pool. The water volume in the suppression pool serves as a heat sink to condense the steam released during a LOCA or SRV discharge. The airspace volume in the wetwell serves as the blowdown reservoir for the nitrogen displaced from the upper and lower drywells during a LOCA after it passes through the horizontal vents and suppression pool.
- Associated containment penetrations and isolation devices.

The drywell and wetwell condense the steam and contain fission product releases from the postulated design basis accident (DBA) (i.e., the double-ended rupture of the largest pipe in the RCS). The leaktight containment vessel prevents the release of fission products to the environment.

Temperature and pressure in the containment vessel are limited following an accident by using the Passive Containment Cooling System (PCCS), an Engineered Safety Feature (ESF) system to condense steam in the containment atmosphere. Additionally, the Isolation Condensers (ICs) and the RWCU/SDC system can assist in cooling reactor steam and reactor water coolants following an accident. The Fuel and Auxiliary Pools Cooling System (FAPCS) and RWCU/SDC can be used to cool the suppression pool water. Safety analyses demonstrate that important containment parameters are maintained within design limits for as long as required.

The design of the containment structure and associated systems meets the requirements of Criterion 16. For further discussion, see the following sections:

Chapter/ Section	Title
3.8.1	Concrete Containment
6.2	Containment Systems
Table 7.1-1	I&C Regulatory Requirements Applicability Matrix

3.1.2.8 Criterion 17 — Electric Power Systems

Criterion 17 Statement

An onsite electric power system and an offsite electric power system shall be provided to permit functioning of structures, systems, and components important to safety. The safety function of each system (assuming the other system is not functioning) shall be to provide sufficient capacity and capability to assure that (1) specified acceptable fuel design limits and design conditions of the reactor coolant pressure boundary are not exceeded as a result of anticipated operational occurrences and (2) the core is cooled and containment integrity and other vital functions are maintained in the event of postulated accidents.

The onsite electric power supplies, including the batteries, and the onsite electric distribution system shall have sufficient independence, redundancy, and testability to perform their safety functions assuming a single failure.

Electric power from the transmission network to the onsite electric distribution system shall be supplied by two physically independent circuits (not necessarily on separate rights of way) designed and located so as to minimize to the extent practical the likelihood of simultaneous failure under operating and postulated accident and environmental conditions. A switchyard common to both circuits is acceptable. Each of these circuits shall be designed to be available in sufficient time following a loss of all onsite alternating current power supplies and the other off-site electric power circuit, to assure that specified acceptable fuel design limits and design conditions of the reactor coolant pressure boundary are not exceeded. One of these circuits shall be designed to be available within a few seconds following a loss-of-coolant accident to assure that core cooling, containment integrity, and other vital safety functions are maintained.

Provisions shall be included to minimize the probability of losing electric power from any of the remaining supplies as a result of, or coincident with, the loss of power generated by the nuclear power unit, the loss of power from the transmission network, or the loss of power from the onsite electric power supplies.

Evaluation Against Criterion 17

Onsite Electric Power System — The onsite power system is divided into multiple trains at the Medium Voltage level(s). This arrangement allows for design and operational flexibility of the plant non-safety fluid and mechanical systems. Separate unit auxiliary and reserve auxiliary transformers provide both a normal preferred and alternate preferred feeds to each of the Medium Voltage power trains. The Medium Voltage trains are divided into two categories; Power Generation and Plant Investment Protection (PIP).

The Power Generation trains supply power to nonsafety-related loads required primarily for unit operation.

The PIP trains supply power to permanent nonsafety-related loads, which due to their specific functions, are generally required to remain operational at all times. The PIP trains may also be connected to the onsite non-safety Alternating Current (AC) power supplies (Standby Diesel Generators [SDGs]). The PIP trains also provide power to the four safety-related divisional isolation buses, which in turn provide AC power to the battery chargers, rectifiers, and isolation bus transformers.

In addition to the two SDGs, the design also includes two Ancillary Diesel Generators (ADGs). The ADGs provide electrical power to a subset of the loads on the PIP trains and loads that have been classified as Criterion B under the Regulatory Treatment of Non-Safety Systems Program (Section 19A.3).

Each division of the safety-related power distribution system is provided with physically separated and electrically independent batteries sized to supply normal and emergency power to the engineered safety systems in the event of loss of all other preferred AC power sources.

The onsite Direct Current (DC) power includes both safety-related and nonsafety-related systems. These DC systems include plant batteries and battery chargers and their DC load, the DC/AC inverters and the inverter loads.

The safety loads utilize safety-related AC power for systems required for safety. DC power from the four divisional safety-related batteries is converted to AC power by the safety-related DC/AC inverters to provide the necessary electrical power. The systems required for safety are:

- RPS;
- Engineered Safety Features Systems;
- ICS;
- Standby Liquid Control (SLC) system; and
- Safety-related information systems.

Offsite Electric Power System — The offsite power system consists of the set of electrical circuits and associated equipment that is used to interconnect the offsite transmission system with the plant main generator and the onsite electrical power distribution system.

The system includes the plant switchyard and the high voltage tie lines to the unit auxiliary and Reserve Auxiliary Transformer (RAT) disconnects at the switchyard side of the Unit Auxiliary Transformers (UATs) and RATs.

The offsite power system begins at the terminals on the transmission system side of the main generator circuit breakers and the switchyard side of the UAT and RAT disconnects, which connect to the offsite transmission systems.

Power is supplied to the plant from two electrically independent and physically separate offsite power sources as follows:

- “Normal Preferred” source through the UATs; and
- “Alternate Preferred” source through the RATs.

During plant startup, normal or emergency shutdown, or during plant outages, the offsite power system serves to supply power from the offsite transmission system to the plant auxiliary and service loads. During normal operation, the offsite power system is used to transmit generated power to the offsite transmission system and to the plant auxiliary and service loads.

The design of the offsite power systems is outside the scope of the ESBWR Standard Plant design. However, offsite power system requirements that meet the requirements of Criterion 17 are provided in Section 8.2. The onsite electric power systems are designed to meet the requirements of Criterion 17.

The ESBWR DC onsite power systems are adequate to accomplish required safety-related functions under all postulated accident conditions. The ESBWR does not require AC power (other than that provided by the uninterruptible power supplies) to achieve safe shutdown or to perform any safety-related function. Therefore, onsite safety-related DC power systems are applicable for Regulatory Guide (RG) 1.93 conformance; onsite AC power systems and offsite AC power systems are excluded from conformance with RG 1.93.

For further discussion, see the following sections:

Chapter/ Section	Title
5.4.6	Isolation Condenser System
5.4.12	Reactor Coolant System High Point Vents
6.3	Emergency Core Cooling Systems
8.1.5.2	Onsite Power
8.2	Offsite Power Systems
8.3	Onsite Power Systems
9.3.5	Standby Liquid Control System

3.1.2.9 Criterion 18 — Inspection and Testing of Electric Power Systems

Criterion 18 Statement

Electric power systems important to safety shall be designed to permit appropriate periodic inspection and testing of important areas and features, such as wiring, insulation, connections, and switchboards, to assess the continuity of the systems and the condition of their components. The systems shall be designed with a capability to test periodically (1) the operability and functional performance of the components of the systems, such as onsite power sources, relays, switches, and buses, and (2) the operability of the systems as a whole and, under conditions as close to design as practical, the full operation sequence that brings the systems into operation, including operation of applicable portions of the protection system, and the transfer of power among the nuclear power unit, the offsite power system, and the onsite power system.

Evaluation Against Criterion 18

All safety-related loads are normally supplied directly through DC to AC inverters. Capability is provided for testing each battery, rectifier, battery charger, and inverter without disrupting power to the safety-related loads.

Design of the safety-related power system provides testability in accordance with the requirements of Criterion 18. For further discussion, see the following sections:

Chapter/ Section	Title
8.1.5.2	Onsite Power
8.2	Offsite Power Systems
8.3	Onsite Power Systems

3.1.2.10 Criterion 19 — Control Room

Criterion 19 Statement

A control room shall be provided from which actions can be taken to operate the nuclear power unit safely under normal conditions and to maintain it in a safe condition under accident conditions, including loss-of-coolant accidents. Adequate radiation protection shall be provided to permit access and occupancy of the control room under accident conditions without personnel receiving radiation exposures in excess of 5 rem whole body, or its equivalent to any part of the body, for the duration of the accident. Equipment at appropriate locations outside the control room shall be provided (1) with a design capability for prompt hot shutdown of the reactor, including necessary instrumentation and controls to maintain the unit in a safe condition during hot shutdown, and (2) with a potential capability for subsequent cold shutdown of the reactor through the use of suitable procedures.

Applicants for and holders of construction permits and operating licenses under this part who apply on or after January 10, 1997, applicants for design approvals or certifications under part 52 of this chapter who apply on or after January 10, 1997, applicants for and holders of combined licenses or manufacturing licenses under part 52 of this chapter who do not reference a standard design approval or certification, or holders of operating licenses using an alternative source term under § 50.67, shall meet the requirements of this criterion, except that with regard to control room access and occupancy, adequate radiation protection shall be provided to ensure that radiation exposures shall not exceed 0.05 Sv (5 rem) total effective dose equivalent (TEDE) as defined in § 50.2 for the duration of the accident.

Evaluation Against Criterion 19

The control room contains the controls and necessary surveillance equipment for operation of the plant systems, including the reactor and its auxiliary systems, ESFs, turbine generator, steam and power conversion systems, and station electrical distribution.

The control room is located in the Control Building (CB). Safe occupancy of the control room during abnormal conditions is provided in the design. Adequate shielding is provided to maintain radiation levels in the control room within prescribed limits in the event of a DBA for the duration of the accident.

The control room ventilation system has redundant equipment and includes radiation, toxic gas and smoke detectors with appropriate alarms and interlocks. The control room intake air can be filtered through high efficiency particulate air/absolute and charcoal filters. If any of the above hazards exist at the normal control room ventilation intake, habitability is assured by the Control Room Habitability Area HVAC Subsystem (CRHAVS), which upon isolation of the control room provides a positive air purge through an Emergency Filter Unit (EFU).

The control room is continuously occupied by qualified operating personnel under both operating and accident conditions. In the unlikely event that the control room must be vacated and access is restricted, instrumentation and controls are provided by two divisional Remote Shutdown System (RSS) panels located outside the control room in the Reactor Building (RB). Either or both of the RSS panels can be utilized to safely perform a hot shutdown and a subsequent cold shutdown of the reactor.

The control room design meets the requirements of Criterion 19. For further discussion, see the following sections:

Chapter/ Section	Title
5.4.7	Residual Heat Removal System
5.4.12	Reactor Coolant System High Point Vents
6.3	Emergency Core Cooling Systems
6.4	Control Room Habitability Systems
Table 7.1-1	I&C Regulatory Requirements Applicability Matrix
9.4.1	Control Building HVAC System
9.4.7	Electrical Building HVAC System
11.5	Process Radiation Monitoring System
12.3	Radiation Protection
12.3.3	Ventilation
18.1.1	Design Goals and Design Bases
19A	Regulatory Treatment of Non-Safety Systems

3.1.3 Group III — Protection and Reactivity Control Systems

3.1.3.1 Criterion 20 — Protection System Functions

Criterion 20 Statement

The protection system shall be designed (1) to initiate automatically the operation of appropriate systems including the reactivity control systems, to assure that specified acceptable fuel design limits are not exceeded as a result of anticipated operational occurrences and (2) to sense accident conditions and to initiate the operation of systems and components important to safety.

Evaluation Against Criterion 20

The RPS is designed to provide timely protection against the onset and consequences of conditions that threaten the integrity of the fuel barrier and RCPB barrier. Fuel damage is prevented by initiation of an automatic reactor shutdown if monitored variables of the nuclear steam supply system (NSSS) (Section 7.2) exceed pre-established limits of AOOs. Scram trip settings are selected and verified to be far enough above or below operating levels to provide proper protection but not be subject to spurious scrams. The RPS includes the uninterruptible power sources, sensors, transmitters, bypass circuitry, and switches that signal the control rod system to scram and shut down the reactor. The scrams initiated by the Neutron Monitoring System (NMS) signals, nuclear boiler high pressure, and reactor vessel low and high water levels prevent fuel damage following abnormal operational transients. Specifically, these process parameters initiate a scram in time to prevent the core from exceeding thermal hydraulic safety limits during abnormal operational transients. Response by the RPS is prompt and the total scram time is short.

In addition to the RPS, which provides for automatic shutdown of the reactor to prevent fuel damage, protection systems are provided to sense accident conditions and to initiate automatically the operation of other safety-related systems and components. Other systems automatically isolate the reactor vessel or the containment to prevent the release of significant amounts of radioactive materials from the fuel and the RCPB. The controls and instrumentation for the Emergency Core Cooling System (ECCS) and the isolation systems are initiated automatically when monitored variables exceed pre-selected operational limits.

The design of the protection system satisfies the functional requirements as specified in Criterion 20. For further discussion, see the following sections:

Chapter/ Section	Title
Table 7.1-1	I&C Regulatory Requirements Applicability Matrix

3.1.3.2 Criterion 21 — Protection System Reliability and Testability

Criterion 21 Statement

The protection system shall be designed for high functional reliability and inservice testability commensurate with the safety functions to be performed. Redundancy and independence designed into the protection system shall be sufficient to assure that (1) no single failure results in loss of the protection function and (2) removal from service of any component or channel does not result in loss of the required minimum redundancy unless the acceptable reliability of operation of the protection system can be otherwise demonstrated.

The protection system shall be designed to permit periodic testing of its functioning when the reactor is in operation, including a capability to test channels independently to determine failures and losses of redundancy that may have occurred.

Evaluation Against Criterion 21

RPS design provides assurance that, through redundancy, each channel has sufficient reliability to fulfill the single-failure criterion. No single component failure, intentional bypass

maintenance operation, calibration operation, or test to verify operational availability, impairs the ability of the system to perform its intended safety function. Additionally, the system design assures that when a scram trip point is exceeded, there is a high scram probability. However, should a scram not occur from the RPS, the Alternate Rod Insertion (ARI) actuates when the trip points are exceeded. There is sufficient electrical and physical separation between channels and between logics monitoring the same variable to prevent environmental factors, electrical transients, and physical events from impairing the ability of the system to respond correctly.

The RPS includes design features that permit in-service testing. This ensures the functional reliability of the system should the reactor variable exceed the corrective action setpoint.

The RPS initiates an automatic reactor shutdown if the monitored plant variables exceed pre-established limits. This system is arranged as four separately powered divisions. Each division has a logic that can produce an automatic trip signal. The logic scheme is a two-out-of-four arrangement.

The RPS can be tested during reactor operation. Manual scram testing is performed by operating one of the four manual scram controls; this tests one division. The total tests verify the ability to de-energize the scram pilot valve solenoids. Indicating lights verify that the actuator's contacts have opened. This capability for a thorough testing program significantly increases reliability.

CRD operability can be tested during normal reactor operation. Rod position indicators and in-core neutron detectors are used to verify control rod movement. Each control rod can be withdrawn one step and then reinserted to the original position without significantly perturbing the NSSS at most power levels. One control rod is tested at a time. Hydraulic supply subsystem pressure can be observed on control room instrumentation.

The high functional reliability, redundancy, and in-service testability of the protection system satisfy the requirements specified in Criterion 21. For further discussion, see the following sections:

Chapter/ Section	Title
Table 7.1-1	I&C Regulatory Requirements Applicability Matrix

3.1.3.3 Criterion 22 — Protection System Independence

Criterion 22 Statement

The protection system shall be designed to assure that the effects of natural phenomena, and of normal operating, maintenance, testing, and postulated accident conditions on redundant channels do not result in loss of the protection function, or shall be demonstrated to be acceptable on some other defined basis. Design techniques, such as functional diversity or diversity in component design and principles of operation, shall be used to the extent practical to prevent loss of the protection function.

Evaluation Against Criterion 22

Components of the protection system are designed so that the mechanical, thermal and radiological environmental conditions resulting from any accident situation in which the components are required to function do not interfere with the operation of that function. The

redundant sensors are electrically and physically separated. Only circuits of the same division are run in the same raceway. Multiplexed signals are carried out by fiber optic medium to assure control signal isolation.

The RPS is designed to permit maintenance and diagnostic work while the reactor is operating, without restricting the plant operation or hindering the output of safety functions. The flexibility in design afforded the protection system allows operational system testing by the use of independent input for each actuator logic. When a safety-related monitored variable exceeds its scram trip point, it is sensed by four independent sensors, each located in a separate instrumentation channel. A bypass of any single channel is permitted for maintenance operation, test, etc. This leaves three channels per monitored variable, each of which is capable of initiating a scram. Only two actuator logics must trip to initiate a scram. Thus, the two-out-of-four arrangement assures that a scram occurs as a monitored variable exceeds its scram setting.

The protection system meets the design requirements for functional and physical independence as specified in Criterion 22. For further discussion, see the following sections:

Chapter/ Section	Title
Table 7.1-1	I&C Regulatory Requirements Applicability Matrix

3.1.3.4 Criterion 23 — Protection System Failure Modes

Criterion 23 Statement

The protection system shall be designed to fail into a safe state or into a state demonstrated to be acceptable on some other defined basis if conditions such as disconnection of the system, loss of energy (e.g., electric power, instrument air), or postulated adverse environments (e.g., extreme heat or cold, fire, pressure, steam, water, and radiation) are experienced.

Evaluation Against Criterion 23

The Reactor Protection (trip) System is designed to fail into a safe state. Use of independent channels allows the system to sustain any logic channel failure without preventing other sensors monitoring the same variable from initiating a scram. With a two-out-of-four logic design, the trip of any two channels initiates a scram. Intentional bypass for maintenance or testing causes the scram logic to revert to two-out-of-three. A failure of any one reactor protection input or subsystem component produces a trip in one channel. This condition is insufficient to produce a reactor scram, and the system performs its protective function upon trip of another channel. Failure of inputs or subsystem components in two channels produces a reactor scram.

The environmental conditions in which the instrumentation and equipment of the reactor protection must operate were considered in establishing the component specifications. Instrumentation specifications are based on the worst expected ambient conditions in which the instruments must operate.

The fail-safe design of the Reactor Protection (trip) System meets the requirements of Criterion 23. For further discussion, see the following sections:

Chapter/ Section	Title

3.11	Environmental Qualification of Mechanical and Electrical Equipment
4.6	Functional Design of Reactivity Control System
Table 7.1-1	I&C Regulatory Requirements Applicability Matrix

3.1.3.5 Criterion 24 — Separation of Protection and Control Systems

Criterion 24 Statement

The protection system shall be separated from control systems to the extent that failure of any single control system component or channel or failure or removal from service of any single protection system component or channel which is common to the control and protection systems leaves intact a system satisfying all reliability, redundancy, and independence requirements of the protection system. Interconnection of the protection and control systems shall be limited to assure that safety is not significantly impaired.

Evaluation Against Criterion 24

There is separation between the RPS and the process control systems. Logic channel and actuator logics of the RPS are not used directly for automatic control of process systems. Sensor outputs may be shared, but each signal is optically isolated before entering a redundant or nonsafety-related channel interface. Therefore, failure in the controls and instrumentation of process systems cannot induce failure of any portion of the protective system. Scram reliability is designed into the RPS and Hydraulic Control Unit (HCU) for the CRD. The scram signal and mode of operation override all other signals.

The systems that isolate containment and the RPV are designed so that any one failure, maintenance operation, calibration operation, or test to verify operational availability does not impair the functional ability of the isolation systems to respond to safety-related variables.

The protection system is separated from control systems as required in Criterion 24. For further discussion, see the following sections

Chapter/ Section	Title
Table 7.1-1	I&C Regulatory Requirements Applicability Matrix

3.1.3.6 Criterion 25 — Protection System Requirements for Reactivity Control Malfunctions

Criterion 25 Statement

The protection system shall be designed to assure that specified acceptable fuel design limits are not exceeded for any single malfunction of the reactivity control systems, such as accidental withdrawal (not ejection or dropout) of control rods.

Evaluation Against Criterion 25

The RPS provides protection against the onset and consequences of conditions that threaten the integrity of the fuel barrier and the RCPB. Any monitored variable, which exceeds the scram

setpoint, initiates an automatic scram and does not impair the remaining variables from being monitored, and if one channel fails, the remaining portion shall function.

The Rod Control and Information System (RC&IS) is designed so that no single failure can negate the effectiveness of a reactor scram. The circuitry of the RC&IS is completely independent of the circuitry controlling the scram valves. This separation of the scram and normal rod control functions prevents failures in the reactor normal circuitry from affecting the scram circuitry. Because one or two control rods are controlled by an individual HCU, a failure that results in continued energizing of an insert solenoid valve on a HCU can affect, at most, two control rods. The effectiveness of a reactor scram is not impaired by the malfunctioning of any one HCU or two control rods.

The design of the protection system assures that specified acceptable fuel limits are not exceeded for any single malfunction of the reactivity control systems as specified in Criterion 25. For further discussion, see the following sections:

Chapter/ Section	Title
4.6	Functional Design of Reactivity Control System
Table 7.1-1	I&C Regulatory Requirements Applicability Matrix

3.1.3.7 Criterion 26 — Reactivity Control System Redundancy and Capability

Criterion 26 Statement

Two independent reactivity control systems of different design principles shall be provided. One of these systems shall use control rods, preferably including a positive means for inserting the rods, and shall be capable of reliably controlling reactivity changes to assure that under conditions of normal operation, including anticipated operational occurrences, and with appropriate margin for malfunctions such as stuck rods, specified acceptable fuel design limits are not exceeded. The second reactivity control system shall be capable of reliably controlling the rate of reactivity changes resulting from planned, normal power changes (including xenon burnout) to assure acceptable fuel design limits are not exceeded. One of the systems shall be capable of holding the reactor core subcritical under cold conditions.

Evaluation Against Criterion 26

Two independent reactivity control systems utilizing different design principles are provided. The normal method of reactivity control employs control rod assemblies, which contain boron carbide (B_4C), hafnium or other approved material. A SLC system is also provided.

Positive insertion of these control rods is provided redundantly by means of the CRD electrical and hydraulic systems. The control rods are capable of reliably controlling reactivity changes during normal operation (e.g., power changes, power shaping, xenon burnout, normal startup and shutdown) via electrical powered insertions and withdrawals. The control rods are also capable of maintaining the core within acceptable fuel design limits during AOOs via the hydraulic powered automatic scram function. The unlikely occurrence of a limited number of stuck rods during a scram does not adversely affect the capability to maintain the core within fuel design limits.

The CRD system is capable of maintaining the reactor core subcritical under cold conditions, even when the pair of the control rods of the highest worth controlled by a HCU is assumed to stick in the fully withdrawn position. This shutdown capability of the CRD system is made possible by designing the fuel with burnable poison (Gadolinium Oxide [Gd_2O_3]) to control the high reactivity of fresh fuel.

The circuitry for electrical powered insertion or withdrawal of control rods is completely independent of the circuitry for hydraulic powered reactor scram. This separation of the scram and normal rod control functions prevents failures in the reactor manual-control circuitry from affecting the scram circuitry. Two sources of energy (accumulator pressure and electrical power to the motors of FMCRDs) are available for control rod insertion over the entire range of reactor pressure (i.e., from operating conditions to cold shutdown). The design of the CRD system includes appropriate margin for malfunctions such as stuck rods in the unlikely event that they do occur. Control rod withdrawal sequences and patterns are selected prior to operation to achieve optimum core performance and, simultaneously, low individual control rod worth. The operating procedures to accomplish such patterns are supplemented by the RC&IS, which prevent rod withdrawals yielding a rod worth greater than permitted by the pre-selected rod withdrawal pattern. Because of the carefully planned and regulated rod withdrawal sequence, prompt shutdown of the reactor can be achieved with the insertion of a small number of the many independent control rods.

A SLC system containing a neutron-absorbing sodium pentaborate solution is the independent backup system. This system has the capability to shut the reactor down from full power and maintain it in subcritical condition at any time during the core life. The reactivity control is provided to reduce reactor power from rated power to cold shutdown conditions, with the control rods withdrawn in the power pattern, accounting for the reactivity effects of the xenon decay, elimination of steam voids, change in water density due to the reduction in water temperature, Doppler effect in uranium, change in the neutron leakage from boiling to cold, and change in the rod worth as boron affects the neutron migration length.

The redundancy and capabilities of the reactivity control systems for the ESBWR satisfy the requirements of Criterion 26. For further discussion, see the following sections:

Chapter/ Section	Title
3.9	Mechanical Systems and Components
4.3	Nuclear Design
4.6	Functional Design of Reactivity Control System
Table 7.1-1	I&C Regulatory Requirements Applicability Matrix
9.3.2	Process Sampling System
9.3.5	Standby Liquid Control System

3.1.3.8 Criterion 27 — Combined Reactivity Control Systems Capability

Criterion 27 Statement

The reactivity control systems shall be designed to have a combined capability, in conjunction with poison addition by the emergency core cooling system, of reliably controlling reactivity changes to assure that under postulated accident conditions and with appropriate margin for stuck rods, the capability to cool the core is maintained.

Evaluation Against Criterion 27

There is no credible event applicable to the ESBWR that requires combined capability of the CRD system and the SLC system. The ESBWR design is capable of maintaining the reactor core subcritical, including allowance for a pair of stuck rods controlled by a HCU, without addition of any poison to the reactor coolant. The primary reactivity control system for the ESBWR during postulated accident conditions is the CRD system. Abnormalities are sensed, and, if protection system limits are reached, corrective action is initiated through automatic insertion of control rods. High integrity of the protection system is achieved through the combination of logic arrangement, actuator redundancy, power supply redundancy, and physical separation. High reliability of reactor scram is further achieved by separation of individual HCUs controlling a pair of control rods and by fail-safe design features built into the CRD system. Response by the RPS is prompt and the total scram time is short.

In the very unlikely event that more than one control rod fails to insert and the core cannot be maintained subcritical by control rods alone, the SLC system can be actuated to insert soluble boron into the reactor core. The SLC system has sufficient capacity to ensure that the reactor can always be maintained subcritical; and, hence, only decay heat is generated by the core, which can be removed by the appropriate decay heat removal systems (e.g., ICS), thereby ensuring that the core is always coolable.

The design of the reactivity control systems ensure reliable control of reactivity under postulated accident conditions with appropriate margin for stuck rods. The capability to cool the core is maintained under postulated accident conditions; thus, Criterion 27 is satisfied. For further discussion, see the following sections:

Chapter/ Section	Title
	(Deleted)
3.9	Mechanical Systems and Components
4.3	Nuclear Design
4.4	Thermal and Hydraulic Design
4.6	Functional Design of Reactivity Control System
6.3	Emergency Core Cooling Systems
Table 7.1-1	I&C Regulatory Requirements Applicability Matrix
	(Deleted)
9.3.5	Standby Liquid Control System

(Deleted)

3.1.3.9 Criterion 28 — Reactivity Limits

Criterion 28 Statement

The reactivity control systems shall be designed with appropriate limits on the potential amount and rate of reactivity increase to assure that the effects of postulated reactivity accidents can neither (1) result in damage to the reactor coolant pressure boundary greater than limited local yielding nor (2) sufficiently disturb the core, its support structures, or other reactor pressure vessel internals to impair significantly the capability to cool the core. These postulated reactivity accidents shall include consideration of rod ejection (unless prevented by positive means), rod dropout, steam line rupture, changes in reactor coolant temperature and pressure, and cold water addition.

Evaluation Against Criterion 28

The combined features of the CRD system and the RC&IS designs incorporate appropriate limits on the potential amount and rate of reactivity increase. Control rod withdrawal sequences and patterns are selected to achieve optimum core performance and low individual rod worth. The RC&IS prevents any withdrawal other than the pre-selected rod withdrawal pattern. The RC&IS function assists the operator with an effective backup control rod monitoring routine that enforces adherence to established startup, shutdown and power operation control rod procedures.

The CRD mechanical design incorporates a passive brake and hydraulic inlet check valve that individually prevent rapid rod ejection. The brake spring holds the rod in position if there is a break in the FMCRD primary pressure boundary. The check valve prevents rod ejection if there is a failure of the scram insert line. The FMCRD includes a separation switch that detects when withdrawal of a stuck control rod is being attempted and stops rod motion. Normal rod movement and the rod withdrawal rate are limited through the fine motion control motor.

The Safety Analyses evaluate the postulated reactivity accidents, as well as abnormal operational transients, in detail. Analyses are included for steam line break, changes in reactor coolant temperature and pressure, and cold water addition. The initial conditions, assumptions, calculational models, sequences of events, and anticipated results of each postulated occurrence are covered in detail. The results of these analyses indicate that none of the postulated reactivity transients or accidents results in damage to the RPV internals, so that the capability to cool the core is not impaired.

The design features of the RC&IS, which limit the potential amount and rate of reactivity increase, ensure that Criterion 28 is satisfied for postulated reactivity accidents. For further discussion, see the following sections:

Chapter/ Section	Title
	(Deleted)
	(Deleted)
	(Deleted)
	(Deleted)
	(Deleted)
4.6	Functional Design of Reactivity Control System
	(Deleted)
	(Deleted)
	(Deleted)
	(Deleted)
Table 7.7-1	I&C Regulatory Requirements Applicability Matrix
	(Deleted)

3.1.3.10 Criterion 29 — Protection Against Anticipated Operational Occurrences

Criterion 29 Statement

The protection and reactivity control systems shall be designed to assure an extremely high probability of accomplishing their safety functions in the event of anticipated operational occurrences.

Evaluation Against Criterion 29

The high functional reliability of the RPS and reactivity control system is achieved through the combination of logic arrangement, redundancy, physical and electrical independence, functional separation, fail-safe design, and in-service testability. These design features are discussed in detail in Criteria 21, 22, 23, 24, and 26.

A thorough program of in-service testing and surveillance maintains an extremely high reliability of timely response to AOOs.

Safety-related components, such as CRDs, RPS components, etc., are testable during normal reactor operation. Functional testing and calibration schedules are developed using available failure rate data, reliability analyses, and operating experience. These schedules represent an optimization of protection and reactivity control system reliability effects during individual component testing on the portion of the system not undergoing test. The capability for in-service testing ensures the high functional reliability of protection and reactivity control systems if a reactor variable exceeds the corrective action setpoint.

The capabilities of the protection and reactivity control systems to perform their safety functions in the event of AOOs satisfy the requirements of Criterion 29. For further discussion, see the following sections:

Chapter/ Section	Title
	(Deleted)
3.9	Mechanical Systems and Components
4.6	Functional Design of Reactivity Control System
Table 7.1-1	I&C Regulatory Requirements Applicability Matrix
	(Deleted)
	(Deleted)

3.1.4 Group IV — Fluid Systems

3.1.4.1 Criterion 30 — Quality of Reactor Coolant Pressure Boundary

Criterion 30 Statement

Components which are part of the reactor coolant pressure boundary shall be designed, fabricated, erected, and tested to the highest quality standards practical. Means shall be provided for detecting and, to the extent practical, identifying the location of the source of reactor coolant leakage.

Evaluation Against Criterion 30

By utilizing conservative design practices and detailed quality control procedures, the pressure retaining components of the RCPB are designed and fabricated to retain their integrity during normal and postulated accident conditions (Subsection 3.1.2.5). Accordingly, components that comprise the RCPB are designed, fabricated, erected, and tested in accordance with recognized industry codes and standards listed in Chapter 5 and Table 3.2-1. Further product and process quality planning are provided as described in Chapter 17 to assure conformance with the applicable codes and standards, and to retain appropriate documented evidence verifying compliance. Because the subject matter of this criterion deals with aspects of the RCPB, further discussion on this subject is treated in the response to Criterion 14.

Means are provided for detecting leakage in the RCPB. The LD&IS consists of sensors and instruments to detect, annunciate, and, in some cases, isolate the RCPB from potentially hazardous leaks before predetermined limits are exceeded. Small leaks are detected by temperature and pressure changes, increased frequency of sump pump operation, and increased airborne radioactivity. In addition to these means of detection, large leaks are detected by changes in flow rates in process lines, and changes in reactor water level. The allowable leakage rates have been based on the predicted and experimentally determined behavior of cracks in pipes, the ability to makeup to the RCS, the normally expected background leakage due to equipment design, and the detection capability of the various sensors and instruments.

The RCPB and the LD&IS are designed to meet requirements of Criterion 30. For further discussion, see the following sections:

Chapter/ Section	Title

	(Deleted)
3.2	Classification of Structures, Systems, and Components
3.10	Seismic and Dynamic Qualification of Mechanical and Electrical Equipment
5.2	Integrity of Reactor Coolant Pressure Boundary
5.2.5	Reactor Coolant Pressure Boundary Leakage Detection
5.3	Reactor Vessel
5.4.12	Reactor Coolant System High Point Vents
Table 7.1-1	I&C Regulatory Requirements Applicability Matrix
	(Deleted)
	(Deleted)

3.1.4.2 Criterion 31 — Fracture Prevention of Reactor Coolant Pressure Boundary

Criterion 31 Statement

The reactor coolant pressure boundary shall be designed with sufficient margin to assure that when stressed under operating, maintenance, testing, and postulated accident conditions (1) the boundary behaves in a nonbrittle manner and (2) the probability of rapidly propagating fracture is minimized. The design shall reflect consideration of service temperatures and other conditions of the boundary material under operating, maintenance, testing, and postulated accident conditions and the uncertainties in determining (1) material properties, (2) the effect of irradiation on material properties, (3) residual, steady-state, and transient stresses, and (4) size of flaws.

Evaluation Against Criterion 31

Brittle fracture control of pressure-retaining ferritic materials is provided to ensure protection against non-ductile fracture. To minimize the possibility of brittle fracture failure of the RPV, the RPV is designed to meet the requirements of ASME Code Section III.

The Nil-Ductility Transition Temperature (NDTT) is defined as the temperature below which ferritic steel behaves in a brittle rather than ductile manner. The NDTT increases as a function of neutron exposure at integrated neutron exposures greater than about $1x10^{17}$ nvt with neutron energies in excess of 1 MeV.

The reactor assembly design provides an annular space from the outermost fuel assemblies to the inner surface of the reactor vessel that serves to attenuate the fast neutron flux incident upon the reactor vessel wall. This annular volume contains the core shroud and reactor coolant. Assuming plant operation at rated power and availability 100% of the plant lifetime, the cumulative neutron fluence at the inner surface of the vessel causes a slight shift in the transition temperature. Expected shifts in transition temperature during design life as a result of environmental conditions, such as neutron flux, are considered in the design. Operational limitations ensure that NDTT shifts are accounted for in the reactor operation.

The RCPB is designed, maintained, and tested to provide adequate assurance that the boundary behaves in a non-brittle manner throughout the life of the plant. Therefore, the RCPB is in conformance with Criterion 31. For further discussion, see the following sections:

Chapter/ Section	Title
	(Deleted)
5.2	Integrity of Reactor Coolant Pressure Boundary
5.3	Reactor Vessel
5.4.8	Reactor Water Cleanup/Shutdown Cooling System
6.1	Design Basis Accident Engineered Safety Feature Materials

3.1.4.3 Criterion 32 — Inspection of Reactor Coolant Pressure Boundary

Criterion 32 Statement

Components which are part of the reactor coolant pressure boundary shall be designed to permit (1) periodic inspection and testing of important areas and features to assess their structural and leaktight integrity, and (2) an appropriate material surveillance program for the reactor pressure vessel.

Evaluation Against Criterion 32

The RPV design and engineering effort includes provisions for in-service inspection. Access to the annulus between the shield wall and vessel is provided by removable shield plugs and panels in the insulation. These openings provide access for examination of the vessel and its appurtenances. Also, removable insulation is provided on the NBS piping and valves extending out to and including the first isolation valve outside containment. Inspection of the RCPB is in accordance with ASME B&PV Code Section XI. Section 5.2 defines the In-service Inspection Plan, access provisions, and areas of restricted access.

Vessel material surveillance samples are located within the RPV. The program includes specimens of the base metal, weld metal, and heat affected zone metal.

The plant testing and inspection program ensures that the requirements of Criterion 32 are met. For further discussion, see the following sections:

Chapter/ Section	Title
	(Deleted)
	(Deleted)
5.3	Reactor Vessel

3.1.4.4 Criterion 33 — Reactor Coolant Makeup

Criterion 33 Statement

A system to supply reactor coolant makeup for protection against small breaks in the reactor coolant pressure boundary shall be provided. The system safety function shall be to assure that specified acceptable fuel design limits are not exceeded as a result of reactor coolant loss due to leakage from the reactor coolant pressure boundary and rupture of small piping or other small components which are part of the boundary. The system shall be designed to assure that for on-site electric power system operation (assuming offsite power is not available) and for off-site electric power system operation (assuming onsite power is not available) the system safety function can be accomplished using the piping, pumps, and valves used to maintain coolant inventory during normal reactor operation.

Evaluation Against Criterion 33

For small breaks without vessel depressurization and with preferred power or onsite AC power available, coolant from nonsafety-related inventory is automatically provided to the vessel by the nonsafety-related CRD System. Safety-related makeup from the initial inventory maintained in the ICs while they are in Hot Standby, is also provided by ICS upon automatic startup to perform its primary decay heat removal function. With or without preferred power and with a loss of feedwater supply, safety-related makeup is provided by the automatic depressurization system (ADS) with GDCS operation. Safety-related makeup is provided for the complete range of break sizes by the GDCS. For small breaks where depressurization of the reactor vessel is necessary to achieve GDCS flow, the ADS function (SRVs and DPVs) of the NBS operates to fully depressurize the vessel. After vessel depressurization and GDCS coolant inventory injection, makeup for core boil-off is provided by safety-related PCCS function through steam condensation and return to the vessel via the GDCS.

This design combination of nonsafety-related and safety-related systems provides the plant with ample reactor coolant makeup for protection against small leaks in the RCPB in response to AOOs and postulated accidents. The requirements of Criterion 33 are met with these systems. For further discussion, see the following sections:

Chapter/ Section	Title
	(Deleted)
5.4.6	Isolation Condenser System
	(Deleted)
Table 7.1-1	I&C Regulatory Requirements Applicability Matrix

3.1.4.5 Criterion 34 — Residual Heat Removal

Criterion 34 Statement

A system to remove residual heat shall be provided. The system safety function shall be to transfer fission product decay heat and other residual heat from the reactor core at a rate such that specified acceptable fuel design limits and the design conditions of the reactor coolant pressure boundary are not exceeded.

Redundancy in components and features, and suitable interconnections, leak detection, and isolation capabilities shall be provided to assure that for onsite electric power system operation (assuming offsite power is not available) and for offsite electric power system operation (assuming onsite power is not available) the system safety function can be accomplished, assuming a single failure.

Evaluation Against Criterion 34

The ICS provides the means to remove decay heat and residual heat from the NSSS at a rate such that specified acceptable fuel design limits and the design conditions of the RCPB are not exceeded.

The major equipment of the ICS consists of heat exchangers. The equipment is connected to the reactor by associated valves and piping, and controls and instrumentation are provided for proper system operation.

Simply opening one of a pair of redundant, diverse drain line valves actuates each ICS sub-loop. Three of the four ICS sub-loops are adequate operating alone to remove residual heat from the reactor core and to assure fuel and RCPB design limits are not exceeded following an NSSS isolation event. The ICS provides the capability to reliably remove decay heat and residual heat from the reactor as required by Criterion 34.

The design of the ICS meets the requirements of Criterion 34. For further discussion, see the following sections:

Chapter/ Section	Title
5.4.6	Isolation Condenser System
5.4.7	Residual Heat Removal System
Table 7.1-1	I&C Regulatory Requirements Applicability Matrix
	(Deleted)

3.1.4.6 Criterion 35 — Emergency Core Cooling

Criterion 35 Statement

A system to provide abundant emergency core cooling shall be provided. The system safety function shall be to transfer heat from the reactor core following any loss of reactor coolant at a rate such that (1) fuel and clad damage that could interfere with continued effective core cooling is prevented and (2) clad metal-water reaction is limited to negligible amounts.

Suitable redundancy in components and features, and suitable interconnections, leak detection, isolation, and containment capabilities shall be provided to assure that for onsite electric power system operation (assuming offsite power is not available) and for offsite electric power system operation (assuming onsite power is not available), the system safety function can be accomplished, assuming a single failure.

Evaluation Against Criterion 35

The ECCS consists of the following:

- ICS;
- SLC system;
- GDCS; and
- ADS

The ECCS is designed to limit fuel cladding temperature over the complete spectrum of possible break sizes in the RCPB, including the complete circumferential rupture of the largest pipe connected to the RPV. The ESBWR ECCS does not rely on pumps, offsite AC power, or SDGs to accomplish its safety function.

The ICS and GDCS provide flow to the annulus region of the reactor through their own nozzles. The SLC system provides coolant to the bypass region of the core.

GDCS provides gravity-driven flow from three separate water pools located within the drywell at an elevation above the active core region. It also provides water flow from the suppression pool to meet long-term post-LOCA core cooling requirements.

ICS provides water that accumulates in heat exchangers and condensate pipe when the system is in standby. The water flows into the vessel when the ICS is initiated. This capability is available over the entire range of reactor vessel pressures.

SLC injects borated water into the vessel in the event of low level in the vessel for the purposes of providing additional coolant volume.

The ADS provides reactor depressurization capability in the event of a pipe break that does not rapidly depressurize the reactor. The ADS is a function of the NBS and is accomplished through the combined use of squib-type permanently - opening DPVs and nitrogen operated SRVs.

The ADS operates as follows: when a confirmed low-low water level (Level 1) signal is received and sealed-in to the ECCS logic, a number of SRVs and DPVs actuate in a sequence described in Subsection 6.3.3. This sequence of SRV and DPV openings ensures that the RPV is depressurized rapidly to allow GDCS initiation prior to core uncovery.

Results of the performance of the ECCS for the entire spectrum of reactor pressure boundary line breaks are discussed in Subsection 6.3, which provides an analysis to show that the ECCS conforms to 10 CFR 50.46. This analysis shows complete compliance with Criterion 35 with the following results:

- Peak cladding temperatures are below the NRC acceptable limit.
- The amount of fuel cladding reacting with steam is well below the acceptable limit.
- The accident is terminated while the core is maintained in a coolable geometry.
- The core temperature is reduced and the decay heat can be removed for an extended period of time.
- The ESBWR ECCS is powered by the safety-related station batteries. The redundancy and capability of the onsite electrical power systems are presented in the evaluation against Criterion 17.

The design of the ECCS, including the power supply, meets the requirements of Criterion 35. For further discussion, see the following subsections:

Chapter/ Section	Title
5.4.6	Isolation Condenser System
6.1	Design Basis Accident Engineered Safety Feature Materials
6.3	Emergency Core Cooling Systems
	(Deleted)
Table 7.1-1	I&C Regulatory Requirements Applicability Matrix
	(Deleted)
9.3.5	Standby Liquid Control System
	(Deleted)

3.1.4.7 Criterion 36 — Inspection of Emergency Core Cooling System

Criterion 36 Statement

The emergency core cooling system shall be designed to permit appropriate periodic inspection of important components, such as spray rings in the reactor pressure vessel, water injection nozzles, and piping, to assure the integrity and capability of the system.

Evaluation Against Criterion 36

The ECCS discussed in Criterion 35 includes in-service inspection considerations. Removable plugs in the reactor shield wall and/or panels in the insulation are provided on the ECCS piping in the drywell.

During plant operations, the instrumentation valves, instrument piping, instrumentation, wiring, and other components that are outside the drywell can be visually inspected at any time. Components inside the drywell can be inspected when the drywell is open for access during outages. Portions of the ECCS, which are part of the reactor pressure boundary, are designed to specifications for in-service inspection to detect defects, which might affect the cooling performance. Particular attention is given to the GDCS nozzles.

Design of the reactor vessel and internals for in-service inspection and the plant testing program ensure that the requirements of Criterion 36 are met. For further discussion see the following subsections:

Chapter/ Section	Title
	(Deleted)
	(Deleted)
	(Deleted)
5.4.6	Isolation Condenser System

6.3	Emergency Core Cooling Systems
6.6	Preservice and Inservice Inspection and Testing of Class 2 and 3 Components and Piping
9.3.5	Standby Liquid Control System

3.1.4.8 Criterion 37 — Testing of Emergency Core Cooling System

Criterion 37 Statement

The emergency core cooling system shall be designed to permit appropriate periodic pressure and functional testing to assure (1) the structural and leaktight integrity of its components, (2) the operability and performance of the active components of the system, and (3) the operability of the system as a whole and, under conditions as close to the design as practical, the performance of the full operational sequence that brings the system into operation, including operation of applicable portions of the protection system, the transfer between normal and emergency power sources, and the operation of the associated cooling water system.

Evaluation Against Criterion 37

Each of the ECCS subsystems (ICS, SLC, ADS, and GDCS) is designed to permit periodic testing to assure operability and performance of active components of each system.

The ADS DPVs, SLC and the GDCS valves cannot be tested during power operation; selected actuators are removed and test fired during refueling outages. The GDCS check valves can be functionally tested via dedicated test line connections every refueling outage. GDCS flow testing is conducted as part of preoperational testing. Provisions for flushing the GDCS injection lines and venturi within the GDCS injection nozzle are provided. The ECCS is subject to periodic tests to verify the logic sequence that initiates ADS, ICS, SLC, and the GDCS system. A periodic self-test of the logic circuitry is performed to verify operability.

The design of the ECCS subsystems meets the requirements of Criterion 37. For further discussions, see the following subsections:

Chapter/ Section	Title
3.9	Mechanical Systems and Components
	(Deleted)
5.4.6	Isolation Condenser System
6.3	Emergency Core Cooling Systems
6.6	Preservice and Inservice Inspection and Testing of Class 2 and 3 Components and Piping
Table 7.1-1	I&C Regulatory Requirements Applicability Matrix
	(Deleted)
9.3.5	Standby Liquid Control System
	(Deleted)

3.1.4.9 Criterion 38 — Containment Heat Removal

Criterion 38 Statement

A system to remove heat from the reactor containment shall be provided. The system safety function shall be to reduce rapidly, consistent with the functioning of other associated systems, the containment pressure and temperature following any LOCA and maintain them at acceptably low levels.

Suitable redundancy in components and features, and suitable interconnections, leak detection, isolation, and containment capabilities shall be provided to assure that for onsite electric power system operation (assuming offsite power is not available) and for offsite electric power system operation (assuming onsite power is not available) the system safety function can be accomplished, assuming a single failure.

Evaluation Against Criterion 38

The containment heat removal function is accomplished by the PCCS and associated support systems. The PCCS provides sufficient decay heat removal post-LOCA to assure that containment never exceeds its design pressure and temperature.

The PCCS consists of six independent steam condensers that are an integral part of the containment. Each PCCS condenser contains two heat exchanger modules that condense steam on the tubeside and transfer heat to water in the Isolation Condenser/Passive Containment Cooling System (IC/PCCS) pool which is vented to atmosphere. The IC/PCCS pool is positioned above, and outside, the ESBWR containment (drywell). To assure availability, no valves are employed, thus precluding inadvertent isolation of the PCCS condensers. Long-term effectiveness of the PCCS credits an active gas recirculation system, which uses in-line fans to pull drywell gas through the PCCS condensers. These manually actuated fans (one per train) are located on a branch from the vent line and discharge to the GDCS pool.

The PCCS condensers receive a steam-gas mixture supply directly from the drywell. PCCS flow is driven by the pressure difference created between the containment drywell and the suppression

pool during a LOCA. The PCCS does not require power supplies, sensors, control logic, power-actuated devices or operator actions to function in the first 72 hours after a LOCA. During normal plant operation, the PCCS condensers are in "ready standby." In order to ensure the 72 hours of passive operation of the PCCS, the pool cross-connect valves, which are part of the ICS, must open to allow water to flow from the equipment pool to the IC/PCCS inner expansion pools. These valves are controlled by the Q-DCIS.

The PCCS is designed to Quality Group B Requirements per Regulatory Guide (RG) 1.26. The system is designed as Seismic Category I per RG 1.29. The common pool that the PCCS condensers share with the ICs of the ICS is an ESF. This pool is designed such that no locally generated force (such as an IC tube rupture) can destroy its function. Protection requirements against mechanical damage, fire and flood apply to the common IC/PCCS pool.

The safety-related IC/PCCS pool subcompartments provide protection for the PCCS condensers to comply with 10 CFR 50, Appendix A, Criteria 2 and 4.

The PCCS condensers do not fail in a manner that damages the safety-related IC/PCCS pool because it is designed to withstand the induced dynamic loads, which are caused by combined seismic, DPV/SRV or LOCA conditions in addition to PCCS operating loads.

The PCCS provides the containment heat removal function required in Criterion 38. For further discussion, see the following subsections:

Chapter/ Section	Title
6.2.2	Passive Containment Cooling System
Table 7.1-1	I&C Regulatory Requirements Applicability Matrix

3.1.4.10 Criterion 39 — Inspection of Containment Heat Removal System

Criterion 39 Statement

The containment heat removal system shall be designed to permit appropriate periodic inspection of important components, such as the torus, sumps, spray nozzles, and piping to assure the integrity and capability of the system.

Evaluation Against Criterion 39

The PCCS condenser is an integral part of the containment (drywell) pressure boundary and is used to mitigate the consequences of an accident. Because of this function it is classified as an ESF. The PCCS is designed to ASME Code Section III, Class MC and Section XI, IWE requirements for design and accessibility of welds for in-service inspection to meet 10 CFR 50 Appendix A, Criterion 16. Ultrasonic testing of tube-to-header welds and eddy current testing of tubes can be done with the PCCS condenser in place.

The containment heat removal system is designed to permit periodic inspection of major components to meet the requirements of Criterion 39. For further discussion, see the following subsections:

Chapter/ Section	Title
6.2.2	Passive Containment Cooling System
6.6	Preservice and Inservice Inspection and Testing of Class 2 and 3 Components and Piping

3.1.4.11 Criterion 40 — Testing of Containment Heat Removal System

Criterion 40 Statement

The containment heat removal system shall be designed to permit appropriate periodic pressure and functional testing to assure (1) the structural and leaktight integrity of its components, (2) the operability and performance of the active components of the system, and (3) the operability of the system as a whole, and under conditions as close to the design as practical the performance of the full operational sequence that brings the system into operation, including operation of applicable portions of the protection system, the transfer between normal and emergency power sources, and the operation of the associated cooling water system.

Evaluation Against Criterion 40

The PCCS accomplishes the containment heat removal function. The PCCS is an integral part of the containment boundary. It is designed to be periodically pressure tested as part of overall Containment Leakage Rate Testing Program (Subsections 6.2.6.1, 6.2.6.2 and 6.2.6.3) to demonstrate structural and leaktight integrity. Also, the PCCS loops can be isolated for individual pressure testing during maintenance or in-service inspection using various non-destructive examination methods.

Functional and operability testing of the PCCS is not needed because there are no active components of the system needed in the first 72 hours after a LOCA. Long-term effectiveness of the PCCS requires that the vent fans are manually actuated. Performance testing during power operation is not feasible; however, the performance capability of the PCCS is proven by full-scale PCCS condenser prototype tests at a test facility before their application to the plant containment system design. Performance is established for the range of in-containment environmental conditions following a LOCA. Integrated containment cooling tests have been completed on a full height, reduced section test facility, and the results have been correlated with TRACG computer program analytical predictions; this computer program is used to show acceptable containment performance.

The design of containment heat removal system testing meets the requirements of Criterion 40. For further discussion, see the following subsections:

Chapter/ Section	Title
3.9	Mechanical Systems and Components
6.2.2	Passive Containment Cooling System
6.6	Preservice and Inservice Inspection and Testing of Class 2 and 3 Components and Piping

(Deleted)

3.1.4.12 Criterion 41 — Containment Atmosphere Cleanup

Criterion 41 Statement

Systems to control fission products, hydrogen, oxygen, and other substances which may be released into the reactor containment shall be provided as necessary to reduce, consistent with the functioning of other associated systems, the concentration and quantity of fission products released to the environment following postulated accidents, and to control the concentration of hydrogen or oxygen and other substances in the containment atmosphere following postulated accidents to assure that containment integrity is maintained.

Each system shall have suitable redundancy in components and features, and suitable interconnections, leak detection, isolation, and containment capabilities to assure that for on-site electric power system operation (assuming offsite power is not available) and for offsite electric power system operation (assuming onsite power is not available) its safety function can be accomplished, assuming a single failure.

Evaluation Against Criterion 41

Fission products, hydrogen, oxygen, and other substances released from the reactor are contained within the low-leakage containment. Leakage from the containment after an accident is such that the dose guidelines of 10 CFR 52.47 are not exceeded. Containment leakage enters the RB or Turbine Building where it is assumed to be released to the environment. The threat posed by hydrogen and oxygen is addressed by maintaining the containment inerted with nitrogen during operation by the Containment Inerting System (CIS), and by designing certain components to withstand hydrogen combustion loads. Passive Autocatalytic Recombiners (PARs) are provided to recombine hydrogen and oxygen for long-term pressure control following an accident.

The containment integrity is assured for postulated accidents and requirements of Criterion 41 are met. For further discussion, see the following sections:

Chapter/ Section	Title
	(Deleted)
6.1	Design Basis Accident Engineered Safety Feature Materials
6.2.5	Combustible Gas Control in Containment
6.5.4	Suppression Pool as a Fission Product Cleanup System
Table 7.1-1	I&C Regulatory Requirements Applicability Matrix
	(Deleted)
	(Deleted)
9.3.2	Process Sampling System
	(Deleted)

3.1.4.13 Criterion 42 — Inspection of Containment Atmosphere Cleanup Systems

Criterion 42 Statement

The containment atmosphere cleanup systems shall be designed to permit appropriate periodic inspection of important components, such as filter frames, ducts, and piping to assure the integrity and capability of the systems.

Evaluation Against Criterion 42

Containment atmosphere control is provided by the Containment Inerting System (CIS). Except for components located in the containment, other components of the CIS are accessible for inspection during normal plant operation at power. The components within the containment may be inspected during refueling and maintenance outages.

The design of the CIS meets the requirements of Criterion 42. For further discussion, see the following sections:

Chapter/ Section	Title
	(Deleted)
6.2.5	Combustible Gas Control in Containment
6.5.4	Suppression Pool as a Fission Product Cleanup System
6.6	Preservice and In-service Inspection and Testing of Class 2 and 3 Components and Piping
Table 7.1-1	I&C Regulatory Requirements Applicability Matrix

3.1.4.14 Criterion 43 — Testing of Containment Atmosphere Cleanup Systems

Criterion 43 Statement

The containment atmosphere cleanup systems shall be designed to permit appropriate periodic pressure and functional testing to assure (1) the structural and leaktight integrity of its components, (2) the operability and performance of the active components of the systems such as fans, filters, dampers, pumps, and valves and (3) the operability of the systems as a whole and, under conditions as close to design as practical, the performance of the full operational sequence that brings the systems into operation, including operation of applicable portions of the protection system, the transfer between normal and emergency power sources, and the operation of associated systems.

Evaluation Against Criterion 43

Containment atmosphere control is provided by the CIS. The CIS is designed to be periodically tested.

The design of the CIS meets the requirements of Criterion 43. For further discussion, see the following sections:

Chapter/ Section	Title
	(Deleted)
3.9	Mechanical Systems and Components
6.2.3	Reactor Building Functional Design
6.2.5	Combustible Gas Control in Containment
6.5.4	Suppression Pool as a Fission Product Cleanup System
6.6	Preservice and Inservice Inspection and Testing of Class 2 and 3 Components and Piping
Table 7.1-1	I&C Regulatory Requirements Applicability Matrix

3.1.4.15 Criterion 44 — Cooling Water

Criterion 44 Statement

A system to transfer heat from structures, systems, and components important to safety, to an ultimate heat sink shall be provided. The system safety function shall be to transfer the combined heat load of these structures, systems, and components under normal operating and accident conditions.

Suitable redundancy in components and features, and suitable interconnections, leak detection, and isolation capabilities shall be provided to assure that for onsite electric power system operation (assuming offsite power is not available) and for offsite electric power system operation (assuming onsite power is not available), the system safety function can be accomplished, assuming a single failure.

Evaluation Against Criterion 44

The ESBWR ultimate heat sink is the IC/PCCS pool. In the event of a DBA, heat is transferred to the IC/PCCS pool(s) through the ICS and the PCCS. The water in the IC/PCCS pool(s) is allowed to boil and the resulting steam is vented to the environment. The PCCS has no active components and requires no electrical motive power or control and instrumentation functions to perform its safety-related function of transferring heat to the ultimate heat sink. The initial IC/PCCS pool volume, combined with the Equipment Storage Pool and Reactor Well, provides sufficient water volume for at least 72 hours after a LOCA without external make-up to the IC/PCCS pools. The pool cross-connect valves, which are part of the ICS, must open to allow water to flow from the equipment pool to the IC/PCCS inner expansion pools. These valves are controlled by the Q-DCIS. Because only one of the two valves on either side of the equipment pool needs to open, no credible single failure can prevent the IC/PCCS pools from performing their safety-related function.

The requirements of Criterion 44 for heat transfer to the ultimate heat sink are met. For further discussion, see the following sections:

Chapter/ Section	Title
	(Deleted)
	(Deleted)
	(Deleted)
Table 7.1-1	I&C Regulatory Requirements Applicability Matrix
9	Auxiliary System
9.2.5	Ultimate Heat Sink

3.1.4.16 Criterion 45 — Inspection of Cooling Water System

Criterion 45 Statement

The Cooling Water System shall be designed to permit appropriate periodic inspection of important components, such as heat exchangers and piping, to assure the integrity and capability of the system.

Evaluation Against Criterion 45

The IC/PCCS pool is located outside containment and is accessible for periodic inspections. During outages, the IC/PCCS pool compartments can be drained to permit inspection of the IC/PCCS pool components.

The features of the IC/PCCS pools meet the requirements of Criterion 45. For further discussion, see the following sections:

Chapter/ Section	Title
	(Deleted)
	(Deleted)
	(Deleted)
6.6	Preservice and Inservice Inspection and Testing of Class 2 and 3 Components and Piping
9	Auxiliary System
9.2.5	Ultimate Heat Sink
14	Initial Test Program

3.1.4.17 Criterion 46 — Testing of Cooling Water System

Criterion 46 Statement

The Cooling Water System shall be designed to permit appropriate periodic pressure and functional testing to assure (1) the structural leaktight integrity of its components, (2) the operability and the performance of the active components of the system, and (3) the operability of the system as a whole and, under conditions as close to the design as practical, the

performance of the full operational sequence that brings the system into operation for reactor shutdown and for loss-of-coolant-accidents, including operation of applicable portions of the protection system and the transfer between normal and emergency power sources.

Evaluation Against Criterion 46

Redundancy and isolation are provided to allow periodic inspection of the IC/PCCS pool compartments. As discussed in the evaluation of Criterion 44, the IC/PCCS pools contain no active components aside from connections to the Equipment Storage Pool that open automatically to ensure adequate coolant is provided for at least the initial 72 hours following an accident. These connections are accessible during an outage to permit inspection. The periodic inspections described in the response to Criterion 45 verify system integrity (see the evaluation of Criterion 40).

The design of the IC/PCCS pools meets the requirements of Criterion 46. For further discussion, see the following sections:

Chapter/ Section	Title
	(Deleted)
3.9	Mechanical Systems and Components
	(Deleted)
	(Deleted)
6.6	Preservice and Inservice Inspection and Testing of Class 2 and 3 Components and Piping
9	Auxiliary System
9.2.5	Ultimate Heat Sink
	(Deleted)
	(Deleted)

3.1.5 Group V — Reactor Containment

3.1.5.1 Criterion 50 — Containment Design Basis

Criterion 50 Statement

The reactor containment structure, including access openings, penetrations, and the Containment Heat Removal System, shall be designed so that the containment structure and its internal compartments can accommodate, without exceeding the design leakage rate and with sufficient margin, the calculated pressure and temperature conditions resulting from any loss-of-coolant-accident. This margin shall reflect consideration of (1) the effects of potential energy sources which have not been included in the determination of peak conditions, such as energy in steam generators and, as required by Section 50.44, energy from metal-water and other chemical reactions that may result from degradation but not total failure of emergency core cooling functioning, (2) the limited experience and experimental data available for defining accident phenomena and containment responses, and (3) the conservatism of the calculational model and input parameters.

Evaluation Against Criterion 50

Design of the containment is based on consideration of the full spectrum of postulated accidents which would result in the release of reactor coolant to the containment. These accidents include liquid breaks, steam breaks, and partial breaks (both steam and liquid). The evaluation of the containment design is based on enveloping the results of this range of analyses, plus provision for appropriate margins. The most limiting short-term and long-term pressure and temperature responses are assessed to verify adequacy of the containment structure.

The design of the containment system meets the requirements of Criterion 50. For further discussion, see the following sections:

Chapter/ Section	Title
3.7	Seismic Design
3.8	Design of Seismic Category I Structures
5.4.8	Reactor Water Cleanup/Shutdown Cooling System
6.2.1	Containment Functional Design
	(Deleted)
8.1.5.2	Onsite Power
8.3	Onsite Power Systems
	(Deleted)

3.1.5.2 Criterion 51 — Fracture Prevention of Containment Pressure Boundary

Criterion 51 Statement

The reactor containment boundary shall be designed with sufficient margin to assure that under operating, maintenance, testing, and postulated accident conditions (1) its ferritic materials behave in a nonbrittle manner and (2) the probability of rapidly propagating fracture is minimized.

The design shall reflect consideration of service temperatures and other conditions of the containment boundary material during operation, maintenance, testing, and postulated accident conditions and the uncertainties in determining (1) material properties, (2) residual, steady-state, and transient stresses, and (3) size of flaws.

Evaluation Against Criterion 51

The containment vessel is a reinforced concrete structure with ferritic parts, such as a liner and a removable head, which are made of materials that have a NDTT sufficiently below the minimum service temperature to assure that under operating, maintenance, testing, and postulated accident conditions the ferritic materials behave in a nonbrittle manner considering the uncertainties in determining the material properties, stresses and size of flaws.

The containment vessel is enclosed by and integrated with the reinforced concrete RB. The pre-operational test program and the quality assurance program ensure the integrity of the containment and its ability to meet all normal operating and accident requirements.

The containment design meets the requirements of Criterion 51. For further discussion, see the following sections:

Chapter/ Section	Title
	(Deleted)
6.2	Containment Systems
	(Deleted)

3.1.5.3 Criterion 52 — Capability for Containment Leakage Rate Testing

Criterion 52 Statement

The reactor containment and other equipment which may be subjected to containment test conditions shall be designed so that periodic integrated leakage rate testing can be conducted at containment design pressure.

Evaluation Against Criterion 52

The containment system is designed and constructed and the necessary equipment is provided to permit periodic integrated leak-rate tests. The testing program is conducted in accordance with 10 CFR 50 Appendix J.

The testing provisions provided and the test program meet the requirements of Criterion 52. For further discussion, see the following subsection:

Chapter/ Section	Title
6.2.2	Passive Containment Cooling System
6.2.6	Containment Leakage Testing

3.1.5.4 Criterion 53 — Provisions for Containment Testing and Inspection

Criterion 53 Statement

The reactor containment shall be designed to permit (1) appropriate periodic inspection of all important areas, such as penetrations, (2) an appropriate surveillance program, and (3) periodic testing at containment design pressure of the leaktightness of penetrations which have resilient seals and expansion bellows.

Evaluation Against Criterion 53

There are special provisions for conducting individual leakage rates tests on applicable penetrations. Penetrations are visually inspected and pressure tested for leaktightness at periodic intervals in accordance with 10 CFR 50 Appendix J.

The provisions made for periodic testing meet the requirements of Criterion 53. For further discussion, see the following sections:

Chapter/ Section	Title
	(Deleted)
6.2.1	Containment Functional Design
6.2.2	Passive Containment Cooling System
6.2.6	Containment Leakage Testing

3.1.5.5 Criterion 54 — Piping Systems Penetrating Containment

Criterion 54 Statement

Piping systems penetrating the primary reactor containment shall be provided with leak detection, isolation, and containment capabilities having redundancy, reliability, and performance capabilities which reflect the importance to safety of isolating these piping systems. Such piping systems shall be designed with a capability to test periodically the operability of the isolation valves and associated apparatus and to determine if valve leakage is within acceptable limits.

Evaluation Against Criterion 54

Piping systems penetrating containment are designed to provide the required isolation and testing capabilities. These piping systems are provided with test connections to allow periodic leak detection tests as necessary to determine if valve leakage is within acceptable limits.

The actuation test circuitry provides the means for testing isolation valve operability as necessary to determine if operability is within acceptable limits.

The design and provisions made for piping systems penetrating containment meet the requirements of Criterion 54. For further discussion, see the following subsections:

Chapter/ Section	Title
3.9.6	Mechanical Systems and Components
5.4.6	Isolation Condenser System
6.2.4	Containment Isolation Function
6.2.6	Containment Leakage Testing
6.5.2	Fission Product Control Systems and Structures
	(Deleted)

3.1.5.6 Criterion 55 — Reactor Coolant Pressure Boundary Penetrating Containment

Criterion 55 Statement

Each line that is part of the reactor coolant pressure boundary and that penetrates the primary reactor containment shall be provided with containment isolation valves as follows, unless it can be demonstrated that the containment isolation provisions for a specific class of lines, such as instrument lines, are acceptable on some other defined basis:

(1) One locked closed isolation valve inside and one locked closed isolation valve outside containment; or

(2) One automatic isolation valve inside and one locked closed isolation valve outside containment; or

(3) One locked closed isolation valve inside and one automatic isolation valve outside containment. A simple check valve may not be used as the automatic isolation valve outside containment; or

(4) One automatic isolation valve inside and one automatic isolation valve outside containment. A simple check valve may not be used as the automatic isolation valve outside containment.

Isolation valves outside containment shall be located as close to the containment as practical and upon loss of actuating power, automatic isolation valves shall be designed to take the position that provides greater safety.

Other appropriate requirements to minimize the probability or consequences of an accidental rupture of these lines or of lines connected to them shall be provided as necessary to assure adequate safety. Determination of the appropriateness of these requirements, such as higher quality in design, fabrication, and testing, additional provisions for inservice inspection, protection against more severe natural phenomena, and additional isolation valves and containment, shall include consideration of the population density, use characteristics, and physical characteristics of the site environs.

Evaluation Against Criterion 55

The RCPB, as defined in 10 CFR 50, Section 50.2, consists of the RPV, pressure-retaining appurtenances attached to the vessel, valves and pipes which extend from the RPV up to and including the outermost isolation valves. The lines of the RCPB, which penetrate the containment, have isolation valves capable of isolating the containment, thereby precluding any significant release of radioactivity. Justification for the design of each RCPB line penetrating containment is provided in Subsection 6.2.4.

The manner in which RCPB lines that penetrate primary containment meet the requirements of Criterion 55 is discussed further in the following sections:

Chapter/ Section	Title
	(Deleted)
5.4.5	Main Steamline Isolation System

Chapter/ Section	Title
5.4.6	Isolation Condenser System
	(Deleted)
	(Deleted)
6.2.4	Containment Isolation System
	(Deleted)
	(Deleted)
	(Deleted)
	(Deleted)

3.1.5.7 Criterion 56 — Primary Containment Isolation

Criterion 56 Statement

Each line that connects directly to the containment atmosphere and penetrates primary reactor containment shall be provided with containment isolation valves as follows, unless it can be demonstrated that the containment isolation provisions for a specific class of lines, such as instruments lines, are acceptable on some other defined basis:

(1) One locked closed isolation valve inside and one locked closed isolation valve outside containment; or

(2) One automatic isolation valve inside and one locked closed isolation valve outside containment; or

(3) One locked closed isolation valve inside and one automatic isolation valve outside containment. A simple check valve may not be used as the automatic isolation valve outside containment; or

(4) One automatic isolation valve inside and one automatic isolation valve outside containment. A simple check valve may not be used as the automatic isolation valve outside containment.

Isolation valves outside containment shall be located as close to the containment as practical and upon loss of actuating power, automatic isolation valves shall be designed to take the position that provides greater safety.

Evaluation Against Criterion 56

Lines penetrating containment and connecting directly to the containment atmosphere are isolatable by one of the methods specified in Criterion 56 or are exempted. A justification is provided for each containment penetration in Subsection 6.2.4.

The manner in which the containment isolation system meets the requirements of Criterion 56 is discussed further in the following sections:

Chapter/	Title

Section	
6.2.4	Containment Isolation System
	(Deleted)
	(Deleted)
	(Deleted)

3.1.5.8 Criterion 57 — Closed System Isolation Valves

Criterion 57 Statement

Each line that penetrates primary reactor containment and is neither part of the reactor coolant pressure boundary nor connected directly to the containment atmosphere shall have at least one containment isolation valve which shall be either automatic, or locked closed, or capable of remote manual operation. This valve shall be outside the containment and located as close to the containment as practical. A simple check valve may not be used as the automatic isolation valve.

Evaluation Against Criterion 57

Each line that penetrates the containment and is not connected to the containment atmosphere and is not part of the RCPB has at least one isolation valve outside containment.

The manner in which lines that penetrate the containment boundary but are not part of the RCPB nor connect to the containment atmosphere meet the requirements of Criterion 57 is discussed further in the following subsection:

Chapter/ Section	Title
6.2.4	Containment Isolation Systems

3.1.6 Group VI — Fuel and Radioactivity Control

3.1.6.1 Criterion 60 — Control of Releases of Radioactive Materials to the Environment

Criterion 60 Statement

The nuclear power unit design shall include means to control suitably the release of radioactive materials in gaseous and liquid effluents and to handle radioactive solid wastes produced during normal reactor operation, including anticipated operational occurrences. Sufficient holdup capacity shall be provided for retention of gaseous and liquid effluents containing radioactive materials, particularly where unfavorable site environmental conditions can be expected to impose unusual operational limitations upon the release of such effluents to the environment.

Evaluation Against Criterion 60

The ESBWR is designed so that releases of radioactive materials, in their gaseous, liquid, and solid form are minimized. Gaseous releases come primarily from the turbine condenser offgas and the ventilation systems. Noble gas and iodine activity that enters the turbine offgas system is held by ambient charcoal beds. Ventilation releases are through multiple plant stacks. The Turbine Building, Reactor Building/Fuel Building (RB/FB) and Radwaste Building stacks and

the major streams feeding the plant stacks are monitored by the Process Radiation Monitoring System so that action may be taken to avoid releases in excess of regulatory limits.

The radwaste systems process liquid and solid wastes. Processes are provided to treat and package solid wastes, as required by applicable state and federal regulations. In addition, the ESBWR liquid radwaste system can be operated in a mode where non-detergent and non-chemical waste streams are treated to allow maximum recycle to the condensate storage tank. This mode of operation would minimize releases of radioactivity via the liquid or discharge pathway, but would increase solid waste generated.

The radwaste system has significant hold-up capacity, both in waste collection tanks and in sample tanks containing processed water. This hold-up or surge capacity provides the plant operator flexibility in operations when deciding when and how to release effluents to the environment.

The provisions made for controlling the release of radioactive material meet the requirements of Criterion 60. For further discussion, see the following sections:

Chapter/ Section	Title
5.4.8	Reactor Water Cleanup/Shutdown Cooling System
9	Auxiliary System
11	Radioactive Waste Management
	(Deleted)
	(Deleted)
	(Deleted)
	(Deleted)
	(Deleted)

3.1.6.2 Criterion 61 — Fuel Storage and Handling and Radioactivity Control

Criterion 61 Statement

The fuel storage and handling, radioactive waste, and other systems, which may contain radioactivity shall be designed to assure adequate safety under normal and postulated accident conditions. These systems shall be designed (1) with capability to permit appropriate periodic inspection and testing of components important to safety, (2) with suitable shielding for radiation protection, (3) with appropriate containment, confinement, and filtering systems, (4) with a residual heat removal capability having reliability and testability that reflects the importance to safety of decay heat and other residual heat removal, and (5) to prevent significant reduction in fuel storage coolant inventory under accident conditions.

Evaluation Against Criterion 61

The spent fuel storage pool has adequate water shielding for stored spent fuel. Adequate shielding for transporting fuel is also provided in the buffer pool between the vessel and spent fuel storage pool. Liquid level sensors are installed to detect low pool water level. The RB/FB

is designed to meet RG 1.13 criteria. The spent fuel storage pool is designed with no penetrations below the water level needed for adequate shielding at the operating floor. Anti-siphoning provisions protect against draining the spent fuel storage pool in the event of a line break.

New fuel storage racks are provided in the buffer pool adjacent to the vessel cavity. These storage racks preclude accidental criticality (see evaluation against Criterion 62). The new fuel storage racks do not require any special in-service inspection and testing for nuclear safety purposes.

The nonsafety-related FAPCS normally removes decay heat from fuel storage pools. Without the active cooling trains of the FAPCS, the safety-related method of cooling the spent fuel is to allow the spent fuel pools to boil. Sufficient pool water inventory is provided to permit boiling for several days without makeup. If required, makeup water is provided from on site sources for up to at least 7 days from the FPS. Safety-related FAPCS piping is used to transport makeup water to the spent fuel pool from FPS (for at least 7 days) and from a connecting point (also safety-related) in the yard area to portable water sources (See Subsection 9.1.3.2).

The fuel storage and handling system is designed to ensure adequate safety under normal and postulated abnormal conditions. (See Subsection 9.1.4.)

The design of these systems meets the requirements of Criterion 61. For further discussion, see the following sections:

Chapter/ Section	Title
5.4.8	Reactor Water Cleanup/Shutdown Cooling System
9.1.1	New Fuel Storage
9.1.2	Spent Fuel Storage
9.1.3	Fuel and Auxiliary Pools Cooling System
9.1.4	Light Load Handling Systems
9.1.5	Overhead Heavy Load Handling System
9.4.2	Fuel Building HVAC Systems
	(Deleted)
11.4	Radioactive Waste Management System
12.3	Radiation Protection

3.1.6.3 Criterion 62 — Prevention of Criticality in Fuel Storage and Handling

Criterion 62 Statement

Criticality in the fuel storage and handling system shall be prevented by physical systems or processes, preferably by use of geometrically safe configurations.

Evaluation Against Criterion 62

Fuel handling and storage facilities are provided to preclude accidental criticality for new and spent fuel. Criticality of new fuel stored in the buffer pool is prevented by physical separation. Criticality in the spent fuel storage pool is prevented by presence of fixed neutron absorbing material. The new and spent fuel racks are Seismic Category I components.

The spent fuel is stored under water in the spent fuel storage pool. A full array of loaded spent fuel racks is designed to be subcritical. Neutron-absorbing material, as an integral part of the design, is employed to assure that the calculated k_{eff}, including biases and uncertainties, does not exceed 0.95 under all normal and abnormal conditions. The abnormal conditions accounted for are an earthquake, accidental dropping of equipment, or impact caused by the horizontal movement of the fuel handling equipment without first disengaging the fuel from the hoisting equipment.

Refueling interlocks include circuitry that senses conditions of the refueling equipment and the control rods. These interlocks reinforce the operational procedures that prohibit making the reactor critical. The fuel handling system is designed to provide a safe, effective means of transporting and handling and is designed to minimize the possibility of mishandling or maloperation.

The presence of fixed neutron-absorbing material in the spent fuel storage, physical separation in the new fuel storage and the design of fuel handling systems precludes accidental criticality in accordance with Criterion 62. For further discussion, see the following section:

Chapter/ Section	Title
9.1	Fuel Storage and Handling

3.1.6.4 Criterion 63 — Monitoring Fuel and Waste Storage

Criterion 63 Statement

Appropriate systems shall be provided in the fuel storage and radioactive waste systems and associated handling areas to (1) detect conditions that may result in loss of residual heat removal capability and excessive radiation levels and (2) initiate appropriate safety actions.

Evaluation Against Criterion 63

Fuel pool temperature and level are monitored as part of the FAPCS. High pool temperature or low skimmer surge tank level would signal the need for providing additional cooling. Area radiation monitors are provided as part of the Area Radiation Monitoring System, which monitors the operating/refueling floors for high radiation levels.

The radwaste system has no active decay heat removal functions, since the decay heat from the activity in the inputs to radwaste is not sufficient to warrant concern. Radwaste Building area radiation monitors are provided to protect against excessive personal exposure, and monitoring shipping container activity and surface radiation levels to meet appropriate waste and transportation criteria.

The design of these systems meets the requirements of Criterion 63. For further discussion, see the following subsections:

Chapter/ Section	Title
Table 7.1-1	I&C Regulatory Requirements Applicability Matrix
9.1.2	Spent Fuel Storage
9.1.3	Fuel and Auxiliary Pools Cooling System
	(Deleted)
9.3.2	Process Sampling System
11	Radioactive Waste Management System
12	Radiation Protection

3.1.6.5 Criterion 64 — Monitoring Radioactivity Releases

Criterion 64 Statement

Means shall be provided for monitoring the reactor containment atmosphere, spaces containing components for recirculation of loss-of-coolant-accident fluids, effluent discharge paths, and the plant environs for radioactivity that may be released from normal operations, including anticipated operational occurrences, and from postulated accidents.

Evaluation Against Criterion 64

Means have been provided for monitoring radioactivity releases resulting from normal operations and AOOs and from postulated accidents. The following releases are monitored:

- Gaseous releases; and
- Liquid discharge.

In addition, the containment atmosphere is monitored.

The design of these systems meets the requirements of Criterion 64. For further discussion of the means and equipment used for monitoring reactivity releases, see the following sections:

Chapter/ Section	Title
	(Deleted)
Table 7.1-1	I&C Regulatory Requirements Applicability Matrix
9.3.2	Process Sampling System
	(Deleted)
11.3	Gaseous Waste Management System
11.4	Solid Waste Management System
	(Deleted)

3.1.7 COL Information

None.

3.2 CLASSIFICATION OF STRUCTURES, SYSTEMS AND COMPONENTS

ESBWR structures, systems and components are categorized as safety-related (as defined in 10 CFR 50.2) or nonsafety-related. The safety-related structures, systems and components are those relied upon to remain functional during and following design basis events to ensure:

- The integrity of the reactor coolant pressure boundary (RCPB);
- The capability to shut down the reactor and maintain it in a safe condition; or
- The capability to prevent or mitigate the consequences of accidents that could result in potential offsite exposures comparable to the applicable exposure limits set forth in 10 CFR 52.47(a)(2)(iv).

Safety-related structures, systems and components conform to the quality assurance requirements of Appendix B to 10 CFR 50. Nonsafety-Related structures, systems and components have quality assurance requirements applied commensurate with the importance of the item's function. The quality assurance program is described in Chapter 17.

The ESBWR complies with 10 CFR 50, Appendix A, General Design Criterion (GDC) 2, as the safety-related structures, systems and components are designed to withstand the effects of earthquakes without loss of capability to perform their safety-related functions. Specific requirements for seismic design and quality group classifications are identified for these ESBWR items commensurate with their safety classification. Table 3.2-1 identifies these classifications for ESBWR structures, systems and components.

3.2.1 Seismic Classification

The ESBWR meets the acceptance criteria of Standard Review Plan (SRP) 3.2.1 (Reference 3.2-1). Structures that must remain integral with systems and components (including their foundations and supports) that must remain functional or retain their pressure integrity in the event of a safe shutdown earthquake (SSE) are designated Seismic Category I. These include safety-related items and fuel storage racks.

The Seismic Category I structures, systems, and components are designed to withstand the appropriate seismic loads (as discussed in Section 3.7) in combination with other appropriate loads without loss of function or pressure integrity. The seismic classifications indicated in Table 3.2-1 are consistent with the guidelines of Regulatory Guide (RG) 1.29 (Reference 3.2-2).

Structures, systems and components that perform no safety-related function, but whose structural failure or interaction could degrade the functioning of a Seismic Category I item to an unacceptable level of safety or could result in incapacitating injury to occupants of the main control room, are designated Seismic Category II. These items are designed to structurally withstand the effects of an SSE. Seismic Category II structures, systems and components that are also classified as Regulatory Treatment of Non-Safety Systems (RTNSS) Criterion B in Tables 19A-2 and 19A-3 are required to remain functional following a seismic event.

Structures, systems, and components that are not categorized as Seismic Category I or II are designated Seismic Category NS.

Seismic Category NS structures and equipment are designed for seismic requirements in accordance with the International Building Code (IBC) (Reference 3.2-6). The building structures are classified as Category IV (Power Generating Stations) with an Occupancy Importance Factor of 1.5. Either of the methods permitted by the IBC, simplified analysis or dynamic analysis, is acceptable for determination of seismic loads on Seismic Category NS structures and equipment. Refer to Subsection 19A.8.3 for seismic design requirements applicable to Seismic Category NS structures, systems and components designated as RTNSS, and to Table 19A-2 for a list of RTNSS structures, systems and components.

3.2.2 System Quality Group Classification

The ESBWR meets the acceptance criteria of SRP 3.2.2 (Reference 3.2-3). NRC RG 1.26 (Reference 3.2-4) describes a quality group classification method for fluid systems and relates it to industry codes. Items are classified by Quality Group A, B, C or D, as indicated in Table 3.2-3. Table 3.2-3 tabulates the design and fabrication requirements for each quality group, as defined in RG 1.26.

Table 3.2-1 shows the quality group classifications for ESBWR components. Core support structures and containment boundaries are not within the scope of RG 1.26 definitions, but are within the scope of the American Society of Mechanical Engineers (ASME) Boiler and Pressure Vessel (B&PV) Code, Section III. The quality group classifications assigned to core support structures and containment boundaries in Table 3.2-1 are in accordance with Tables 3.2-2 and 3.2-3.

Due to the use of many passive safety-related systems in ESBWR, the definitions of the quality groups provided in RG 1.26 can be somewhat misleading when trying to apply them directly to the ESBWR design. The following definitions in this section are consistent with the definitions in RG 1.26, but have been modified to more accurately describe their application to the ESBWR design.

3.2.2.1 Quality Group A

Quality Group A applies to pressure-retaining portions and supports of mechanical items that form part of the RCPB and whose failure could cause a loss of reactor coolant in excess of the reactor coolant normal makeup capability. These items are designed to meet the ASME B&PV Code, Section III. Remaining portions of the RCPB are classified in accordance with Subsection 3.2.2.2.

3.2.2.2 Quality Group B

Quality Group B applies to pressure-retaining portions and supports of containment and other mechanical items, requirements for which are within the scope of ASME B&PV Code, Section III. These items are not assigned to Quality Group A and are relied upon to accomplish one or more of the following safety-related functions:

- Maintain the pressure integrity of RCPB items that are not Quality Group A.
- During or following design basis accidents whose consequences could result in potential offsite exposures comparable to the limits of 10 CFR 52.47(a)(2)(iv). These items include those that:

- Maintain the pressure integrity of the containment, containment isolation, or extension of containment.
- Maintain the pressure integrity of items that are (1) exterior to the containment; (2) communicate with the RCPB or containment interior; and (3) are not isolated normally, cannot be automatically isolated, or are not isolated following a design basis accident or anticipated operation occurrence (transient).
- Maintain the pressure integrity of items that provide emergency negative reactivity insertion (scram).

As defined in RG 1.26, the Quality Group B standards defined in Table 3.2-3 are applied to water- and steam-containing pressure vessels, heat exchangers (other than turbines and condensers), storage tanks, piping, pumps, and valves that are either part of the RCPB as defined in 10 CFR 50.2 but excluded from the requirements of 10 CFR 50.55a pursuant to paragraph (c)(2) of that section, or not part of the RCPB but part of:

a. Systems or portions of systems important to safety that are designated for (1) emergency core cooling, (2) post-accident containment heat removal, or (3) post-accident fission product removal.
b. Systems or portions of systems important to safety that are designed for (1) reactor shutdown or (2) residual heat removal.
c. Those portions of the steam systems of boiling water reactors extending from the outermost containment isolation valve up to but not including the turbine stop and bypass valves and connected piping up to and including the first valve that is either normally closed or capable of automatic closure during all modes of normal reactor operation. Alternatively, for boiling water reactors containing a shutoff valve (in addition to the two containment isolation valves) in the main steamline and in the main feedwater line, Group B quality standards should be applied to those portions of the steam and feedwater systems extending from the outermost containment isolation valves up to and including the shutoff valve or the first valve that is either normally closed or capable of automatic closure during all modes of normal reactor operation.
d. Systems or portions of systems that are connected to the RCPB and are not capable of being isolated from the boundary during all modes of normal reactor operation by two valves, each of which is either normally closed or capable of automatic closure.

Quality Group B may also be assigned to nonsafety-related equipment in some instances.

3.2.2.3 Quality Group C

Quality Group C applies to pressure-retaining portions and supports of items that are not assigned to Quality Group A or Quality Group B, but (1) are within the scope of the codes and standards defined on Table 3.2-3, and (2) are relied upon to accomplish safety-related functions.

As defined in RG 1.26, the Quality Group C standards defined in Table 3.2-3 are applied to water-, steam- and radioactive-waste-containing pressure vessels, heat exchangers (other than turbines and condensers), storage tanks, piping, pumps, and valves not part of the RCPB or included in Quality Group B but part of:

a. Cooling water and auxiliary feedwater systems or portions of these systems important to safety that are designed for (1) emergency core cooling, (2) post-accident containment heat removal, (3) post-accident containment atmosphere cleanup, or (4) residual heat removal from the reactor and from the spent fuel storage pool (including primary and secondary cooling systems). Portions of these systems that are required for their safety functions and that (1) do not operate during any mode of normal reactor operation and (2) cannot be adequately tested should be classified as Quality Group B.

b. Cooling water and seal water systems or portions of these systems important to safety that are designed for functioning on components and systems important to safety, such as reactor coolant pumps, diesels, and control room.

c. Systems or portions of systems that are connected to the RCPB and are capable of being isolated from that boundary during all modes of normal reactor operation by two valves, each of which is either normally closed or capable of automatic closure.

d. Systems, other than radioactive waste management systems, not covered by items a. through c. above that contain or may contain radioactive material and whose postulated failure would result in conservatively calculated potential offsite doses that exceed 5 mSv (0.5 rem) total effective dose equivalent (TEDE) as defined in 10 CFR 50.2. For those systems located in Seismic Category I structures, only single component failures need be assumed.

Quality Group C may also be assigned to nonsafety-related equipment in some instances.

3.2.2.4 Quality Group D

Quality Group D applies to pressure-retaining portions and supports of items that are not assigned to Quality Group A, Quality Group B or Quality Group C but (1) are within the scope of the codes and standards defined on Table 3.2-3, and (2) are subject to one or more significant licensing requirements or commitments. These items include those that:

- Process, extract, encase, or store radioactive waste.
- Monitor radioactive effluents to ensure that release rates or total releases are within limits established for normal operation and design basis transients.
- Resist failure that could prevent any Quality Group A, Quality Group B or Quality Group C items from performing a safety-related function
- Protect items necessary to attain or maintain safe shutdown following fire.

3.2.3 Safety Classification

Safety-related structures, systems, and components of the ESBWR Standard Plant are classified for design requirements as Safety Class 1, Safety Class 2, or Safety Class 3 in accordance with their safety importance. These safety classifications are identified on Table 3.2-1 for principal structures, systems, and components. Components within a system are assigned different safety classes depending upon their differing safety importance; a system may thus have components in more than one safety class. Safety classification for supports within the scope of ASME B&PV Code Section III depends upon that of the supported component.

This section provides definitions of the safety classes and gives examples of their broad application. Because of specific design considerations, these general definitions are subject to interpretation and exceptions. Table 3.2-1 identifies component classifications on a component-by-component basis for primary components.

Minimum classification requirements (i.e., quality group, seismic category, electrical classification and quality assurance) that are applicable to the various safety-related classes are delineated in Table 3.2-2. Table 3.2-3 identifies the applicable industry codes and standards for the various quality groups defined above in Subsection 3.2.2. Where possible, reference is made to accepted industry codes and standards which define design requirements commensurate with the safety-related function(s) to be performed. In cases where industry codes and standards have no specific design requirements, the sections that summarize the requirements to be implemented in the design are indicated.

Structures, systems and components that have no safety-related function are classified as nonsafety-related and designated N.

3.2.3.1 Safety Class 1

Safety Class 1 applies to all components of the RCPB (as defined in 10 CFR 50.2), and their supports, whose failure could cause a loss of reactor coolant at a rate in excess of the normal makeup system, and which are within the scope of the ASME B&PV Code Section III.

Safety Class 1 structures, systems and components are identified in Table 3.2-1. All Safety Class 1 structures, systems and components are subject to 10 CFR 50 Appendix B quality assurance requirements. Safety Class 1 structures, systems and components that are pressure-retaining components belong to Quality Group A as defined in Subsection 3.2.2.1.

3.2.3.2 Safety Class 2

Safety Class 2 applies to pressure-retaining portions, and their supports, of the primary containment and to other mechanical equipment, requirements for which are within the scope of the ASME Code Section III, that are not included in Safety Class 1 and are designed and relied upon to accomplish the following safety-related functions:

(1) Provide primary containment radioactive material holdup or isolation;

(2) Provide emergency heat removal for the primary containment atmosphere to an intermediate heat sink, or emergency removal of radioactive material from the primary containment atmosphere;

(3) Introduce emergency negative reactivity to make the reactor subcritical;

(4) Ensure emergency core cooling where the equipment provides coolant directly to the core (e.g., emergency core cooling systems); and

(5) Provide or maintain sufficient reactor coolant inventory for emergency core cooling (e.g., GDCS pools).

Safety Class 2 includes the pressure-retaining portions of the following:

(1) Those control rod drive system components that are necessary for emergency negative reactivity insertion;

(2) Emergency core cooling systems;

(3) Primary containment vessel;

(4) Post-accident containment heat removal systems; and

(5) Pipes having a nominal pipe size of 25 mm (1 inch) or smaller that are part of the RCPB.

Safety Class 2 structures, systems, and components are identified in Table 3.2-1. All Safety Class 2 structures, systems and components are subject to 10 CFR 50 Appendix B quality assurance requirements. Safety Class 2 structures, systems and components that are pressure-retaining components belong to Quality Group B (as a minimum) as defined in Subsection 3.2.2.2.

3.2.3.3 Safety Class 3

Safety Class 3 applies to those structures, systems, and components, not included in Safety Class 1 or 2, that are designed and relied upon to accomplish the following safety-related functions:

(1) Provide for functions defined in Safety Class 1 or 2 by means of equipment, or portions thereof, that is not within the scope of the ASME B&PV Code Section III.

(2) Provide secondary containment radioactive material holdup, isolation, or heat removal.

(3) Except for primary containment boundary extension functions, ensure hydrogen concentration control of the primary containment atmosphere to acceptable limits.

(4) Remove radioactive material from the atmosphere of confined spaces outside primary containment (e.g., control room) containing Safety Class 1, 2, or 3 equipment.

(5) Maintain geometry within the reactor to ensure core reactivity control or core cooling capability.

(6) Structurally bear the load or protect Safety Class 1, 2, or 3 equipment in accordance with the requirements.

(7) Provide radiation shielding for the control room or offsite personnel.

(8) Provide inventory of cooling water and shielding for stored spent fuel.

(9) Ensure safety-related functions provided by Safety Class 1, 2, or 3 equipment (e.g., provide heat removal for Safety Class 1, 2, or 3 heat exchangers, provide lubrication of Safety Class 2 or 3 pumps).

(10) Provide actuation or motive power for Safety Class 1, 2, or 3 equipment.

(11) Provide information or controls to ensure capability for manual or automatic actuation of safety-related functions required of Safety Class 1, 2, or 3 equipment.

(12) Supply or process signals or supply power required for Safety Class 1, 2, or 3 equipment to perform their required safety-related functions.

(13) Provide a manual or automatic interlock function to ensure or maintain proper performance of safety-related functions required of Safety Class 1, 2, or 3 equipment.

(14) Provide acceptable environments for Safety Class 1, 2, or 3 equipment and operating personnel.

(15) Monitor plant variables that require Category 1 electrical instrumentation to meet the requirements of RG 1.97 (Reference 3.2-8).

Safety Class 3 includes the following:

(1) Reactor protection system

(2) Electrical and instrumentation auxiliaries necessary for operation of the safety-related systems and components.

(3) Systems or components that restrict the rate of insertion of positive reactivity

(4) Initiating systems required to accomplish emergency core cooling, containment isolation and other safety-related functions

(5) Spent fuel pool

(6) Batteries for the onsite emergency electrical system

(7) Emergency equipment area cooling

(8) Compressed gas or hydraulic systems required to provide control or operation of safety-related systems

Safety Class 3 structures, systems and components are identified in Table 3.2-1. All Safety Class 3 structures, systems and components are subject to 10 CFR 50 Appendix B quality assurance requirements. Safety Class 3 structures, systems and components that are pressure-retaining components belong to Quality Group C (as a minimum) as defined in Subsection 3.2.2.3.

3.2.3.4 NonSafety-Related

Structures, systems and components that do not fall into Safety Classes 1, 2 or 3 are classified as "Nonsafety-Related," which is abbreviated as "N" in Table 3.2-1.

The design requirements for Nonsafety-Related equipment are specified by the designer with appropriate consideration of the intended service of the equipment and expected plant and environmental conditions under which it will operate.

Where appropriate or required by specific regulations, Seismic Category I requirements are specified for Nonsafety-Related equipment in Table 3.2-1. Generally, design requirements for Nonsafety-Related equipment are based on applicable industry codes and standards as summarized in Table 3.2-3. Where these are not available, accepted industry or engineering practice is followed.

Nonsafety-related structures, systems and components that are classified Seismic Category I or II and Quality Group B or C are subject to ASME B&PV Code Section III requirements (including N stamping) and ASME B&PV Code Section XI inspection requirements.

3.2.4 COL Information

None.

3.2.5 References

Note: Detailed references for all Regulatory Guides and Industry Codes and Standards referred to in Tables 3.2-1 through 3.2-3 can be found in Tables 1.9-21 and 1.9-22.

3.2-1 USNRC, "Seismic Classification," NUREG-0800, SRP 3.2.1.

3.2-2 USNRC, "Seismic Design Classification," Regulatory Guide 1.29.

3.2-3 USNRC, "System Quality Group Classification." NUREG-0800, SRP 3.2.2.

3.2-4 USNRC, "Quality Group Classifications and Standards for Water-, Steam-, and Radioactive-Waste-Containing Components of Nuclear Power Plants," Regulatory Guide 1.26.

3.2-5 (Deleted)

3.2-6 International Building Code – 2003 by International Code Council, Inc.

3.2-7 (Deleted)

3.2-8 NRC Regulatory Guide 1.97, "Criteria for Accident Monitoring Instrumentation for Nuclear Power Plants."

3.2-9 Global Nuclear Fuel, "GESTAR II General Electric Standard Application for Reactor Fuel," NEDE-24011-P-A-16, Class III (GE Proprietary) and NEDO-24011-A-16, Class I (Non-proprietary), Revision 16, October 2007.

Table 3.2-1

Classification Summary

Principal Components[1]	Safety Class.[2]	Location[3]	Quality Group[4]	Safety-Related Classification[5]	Seismic Category[6]	Notes
B NUCLEAR STEAM SUPPLY SYSTEMS						
B11 Reactor Pressure Vessel System						
1. Reactor pressure vessel	1	CV	A	Q	I	
2. Reactor vessel appurtenances – reactor coolant pressure boundary (RCPB) portions	1	CV	A	Q	I	
3. Control Rod Drive housing and in-core housing	1	CV	A	Q	I	
4. Control rods	2	CV	—	Q	I	
5. Standby Liquid Control (SLC) system header and spargers	2	CV	—	Q	I	
6. Reactor vessel support and stabilizer	1	CV	A	Q	I	
7. Other safety-related reactor internals, including core support structures (Subsection 3.9.5)	3	CV	B	Q	I	
8. Reactor internals – Nonsafety-Related components (Subsection 3.9.5)	N	CV	—	S	II	(5) c
B21 Nuclear Boiler System (NBS)						
1. Level instrumentation condensing chambers	1	CV	A	Q	I	
2. Safety relief valves (SRVs) and depressurization valves (DPVs)	1	CV	A	Q	I	
3. Safety relief discharge piping (including supports)	3	CV	C	Q	I	

Table 3.2-1

Classification Summary

Principal Components[1]	Safety Class.[2]	Location[3]	Quality Group[4]	Safety-Related Classification[5]	Seismic Category[6]	Notes
4. Nitrogen accumulators (for ADS and manual actuation of SRVs)	3	CV	C	Q	I	
5. Piping and valves (including supports) for main steamlines (MSL) and feedwater (FW) lines up to and including the outermost containment isolation valves	1	CV, RB	A	Q	I	
6. Piping (including supports) for MSL from outermost isolation valve to and including seismic interface restraint	2	RB	B	Q	I	Seismic interface restraints are located inside the seismic category I building.
7. Deleted.						
8. Piping and valves (including supports) for FW from outermost isolation valve to the seismic interface restraint	2	RB	B	Q	I	
9. Pipe whip restraints	3	CV, RB	—	Q	I or II	**Pipe Whip Restraints** —Pipe Whip Restraints are required on the MSL and FW piping.
10. Main steam drain piping and valves (including supports) within outermost containment isolation valves	1	CV, RB	A	Q	I	(7)
11. RPV head vent piping and valves (including supports) to the main steamline and to the second isolation valve	1	CV	A	Q	I	

Table 3.2-1

Classification Summary

Principal Components[1]	Safety Class.[2]	Location[3]	Quality Group[4]	Safety-Related Classification[5]	Seismic Category[6]	Notes
12. Piping (including supports) for main steam drains inboard of outermost MSL isolation valves from outermost containment isolation valves up to and including the seismic restraints	N	RB	B	S	I	(5) a
13. Piping and valves (including supports) for main steam drains beyond outermost MSL isolation valves up to and including second drain isolation valve and associated restricting orifice or seismic restraint	N	TB	B	S	II	(5) c
14. Piping (including supports) for safety-related instrumentation up to but excluding the process instrument, and for nonsafety-related instrumentation up to and including the first instrument isolation valve	2	CV, RB	B	Q	I	(7)
15. Piping and valves (including supports) for nonsafety-related instrumentation downstream of first instrument isolation valve	N	CV, RB	D	N	NS	(7)
16. Other mechanical modules with safety-related function	3	CV, RB, CB	—	Q	I	
17. Other electrical modules, cable, and instrumentation with safety-related function	3	CV, RB, CB	—	Q	I	

Table 3.2-1

Classification Summary

Principal Components[1]	Safety Class.[2]	Location[3]	Quality Group[4]	Safety-Related Classification[5]	Seismic Category[6]	Notes
18. Components (piping, valves, fittings) for the above-valve-seat main steam drain piping from downstream of the seismic restraint, and also for the main steam low-point drain piping from the second drain isolation valve, to the condenser nozzle connection.	N	TB	D	S	NS	(5) c Analyzed to demonstrate structural integrity under SSE conditions.
19. Electrical modules, cables and instrumentation supporting diverse protection functions	N	CV, RB, TB	—	S	II	(5) c, (5) i, (5) j
B32 Isolation Condenser System (ICS)						
1. Steam supply line piping and valves (including supports) from the reactor up to and including the venturis outside containment and purge line returning to main steamline	1	CV, RB	A	Q	I	
2. Isolation condenser and piping outside containment from the supply line venturis to the condensate return line tee.	2	RB	B	Q	I	
3. Condensate return line piping and valves (including supports) from the reactor to the tee connection outside containment	1	CV, RB	A	Q	I	
4. Vent piping and valves (including supports) to suppression pool	2	CV, RB	B	Q	I	

Table 3.2-1

Classification Summary

Principal Components[1]	Safety Class.[2]	Location[3]	Quality Group[4]	Safety-Related Classification[5]	Seismic Category[6]	Notes
5. Electrical modules and cable with safety-related function	3	CV, RB	—	Q	I	
6. Pneumatic accumulators	3	CV, RB	C	Q	I	
7. Electrical modules and cables supporting diverse protection functions	N	CV, RB	—	S	II	(5) c, (5) i, (5) j
8. Pool cross-connect valves	3	RB	C	Q	I	
C CONTROL AND INSTRUMENT SYSTEMS						
C11 Rod Control and Information System (RC&IS)	N	RB, CB	—	S / N	NS	(5) j
C12 Control Rod Drive (CRD) System						
1. CRD primary pressure boundary	1	CV	A	Q	I	
2. CRD internals	3	CV	—	Q	I	
3. Hydraulic control unit (HCU)	2	RB	—	Q	I	(8)
4. Piping including supports – insert line	2	CV, RB	B	Q	I	
5. High pressure makeup piping including supports, from and including the check valve and test valve in the common line, isolation valves and isolation bypass valves up to the connection to RWCU/SDC	2	RB	B	Q	I	CRD piping classification is consistent with piping to which it connects.
6. Piping and valves with no safety-related function (pump suction, pump discharge, drive header, and other piping not part of HCU)	N	RB	D	S	II	(5) c, (7) , (5) k – for other risk-significant equipment

Table 3.2-1

Classification Summary

Principal Components[1]	Safety Class.[2]	Location[3]	Quality Group[4]	Safety-Related Classification[5]	Seismic Category[6]	Notes
7. CRD water pumps	N	RB	D	S	II	(5) c
8. Fine motion drive motor	N	CV	—	S	II	(5) c
9. Electrical modules, solenoids, and cable with safety-related function	3	CV, RB, CB	—	Q	I	
10. Electrical modules and cables supporting anticipated transients without scram (ATWS) Alternate Rod Insertion (ARI) and diverse protection functions	N	RB	—	S	II	(5) c, (5) f, (5) i, (5) j
C21 Leak Detection and Isolation System (LD&IS)						
1. Electrical modules (temperature sensors, pressure transmitters, etc.) and cable with safety-related function	3	CV, RB, CB	—	Q	I	
2. Other electrical modules and cable with no safety-related function	N	CV, RB, CB	—	N	NS	
C31 Feedwater Control System (FWCS)						
1. Electrical modules and cables supporting ATWS and diverse protection functions	N	TB, CB, EB	—	S	NS	(5) f, (5) j
2. Other equipment	N	CV, TB, RB, CB, EB	—	N	NS	

Table 3.2-1

Classification Summary

Principal Components[1]	Safety Class.[2]	Location[3]	Quality Group[4]	Safety-Related Classification[5]	Seismic Category[6]	Notes
C41 Standby Liquid Control (SLC) System						
1. Standby liquid control accumulator including supports and vents	2	RB	B	Q	I	
2. Valves – injection	1	RB	A	Q	I	
3. Piping and valves (including supports) between injection valves and reactor vessel	1	CV, RB	A	Q	I	(7)
4. Piping and valves (including supports) upstream of injection valves and downstream of automatic N_2 makeup valve	2	RB	B	Q	I	(7)
5. N_2 gas bottles and associated piping up to automatic N_2 makeup valve	N	RB, SB	—	N	NS	
6. Electrical modules and cable with safety-related function	3	RB, CB	—	Q	I	
7. Electrical modules and cables supporting diverse protection functions	N	RB, CB	—	S	II	(5) c, (5) j, (5) f – for ATWS equipment, (5) i – for RTNSS equipment
8. Electrical modules and cable – others	N	RB, CB	—	N	NS	

Table 3.2-1

Classification Summary

Principal Components[1]	Safety Class.[2]	Location[3]	Quality Group[4]	Safety-Related Classification[5]	Seismic Category[6]	Notes
9. Piping and valves used for poison solution fill/makeup from the fill/makeup isolation valve downstream to the accumulators	2	RB	B	Q	I	
10. Other equipment used for poison fill/makeup, sampling and mixing	N	RB	—	N	NS	
C51 Neutron Monitoring System (NMS)						
1. Detector and tube assembly – primary pressure boundary	2	CV	B	Q	I	
2. Detector and tube assembly – internals	3	CV	C	Q	I	
3. Electrical modules and cable – SRNM, LPRM, APRM and OPRM	3	CV, CB, RB	—	Q	I	
4. Electrical modules and cables supporting diverse protection functions	N	CV, RB, CB	—	S	II	(5) c, (5) j
C61 Remote Shutdown System (RSS)						
1. Safety-related panels	3	RB	—	Q	I	
2. Nonsafety-Related panels	N	RB	—	S	II	(5) c

Table 3.2-1

Classification Summary

Principal Components[1]	Safety Class.[2]	Location[3]	Quality Group[4]	Safety-Related Classification[5]	Seismic Category[6]	Notes
C62 NonSafety-Related Distributed Control and Information System (DCIS)						
1. Electrical modules and cable with no safety-related function	N	ALL	—	S / N	II/NS	(5) c, (5) i Components whose failure can potentially adversely affect Seismic Category I components (e.g., in main control room) are required to be Seismic Category II and Safety-Related Classification S. Otherwise the components are Seismic Category NS and Safety-Related Classification N.
2. Performance Monitoring and Control Subsystem equipment	N	CB	—	S	II	(5) c
C63 Safety-Related DCIS						
1. Electrical modules and cables with safety-related function	3	RB, CB	—	Q	I	
C71 Reactor Protection System (RPS)	3	CB, TB, RB	—	Q	I	
C72 Diverse Protection System	N	CB, RB	—	S	NS	(5) f, (5) i, (5) j
C74 Safety System Logic and Control (SSLC)	3	RB, CB	—	Q	I	
C82 Plant Automation System	N	CB	—	N	NS	
C85 Steam Bypass and Pressure Control (SB&PC) System	N	CB	—	N	NS	

Table 3.2-1

Classification Summary

Principal Components[1]	Safety Class.[2]	Location[3]	Quality Group[4]	Safety-Related Classification[5]	Seismic Category[6]	Notes
D RADIATION MONITORING SYSTEMS						
D11 Process Radiation Monitoring System (PRMS)						
1. Radiation monitors and sensors with safety-related function	3	RB, CB, FB	—	Q	I	
2. Fission product monitoring piping and valves (including supports) forming part of the containment boundary	2	CV, RB	B	Q	I	
3. Electrical modules and cable with safety-related function	3	CV, RB, CB, FB	—	Q	I	
4. Fission product monitoring system (other portions)	N	CV, RB, CB	—	N	NS	
5. Other electrical modules and cable with no safety-related function	N	ALL	—	N	NS	
D21 Area Radiation Monitoring System (ARMS)	N	ALL, except CV	—	N	NS	
E CORE COOLING SYSTEMS						
E50 Gravity-Driven Cooling System (GDCS)						
1. Piping and valves (including supports) connected with the reactor vessel, including the squib valves, and up to and including the check valves upstream of the squib valves	1	CV	A	Q	I	
2. Piping and valves (including supports) from the check valves upstream of the squib valves to the suppression pool and GDCS pools	2	CV	B	Q	I	

Table 3.2-1

Classification Summary

Principal Components[1]	Safety Class.[2]	Location[3]	Quality Group[4]	Safety-Related Classification[5]	Seismic Category[6]	Notes
3. Piping and valves (including supports) from the GDCS pools to the lower drywell	2	CV	B	Q	I	
4. Safety-related electrical modules, components and cables	3	CV, RB, CB	—	Q	I	
5. GDCS pool splash guard and perforated plate	3	CV	—	Q	I	
6. Nonsafety-Related electrical modules, components and cable	N	CV, RB, CB	—	S	II	(5) c, (5) i, (5) j, (5) k – for deluge function temperature sensors
F REACTOR SERVICING EQUIPMENT						
F11 Fuel Servicing Equipment						
1. Fuel Preparation Machine	N	FB	—	S	I	(5) a
2. New Fuel Inspection Stand	N	FB	—	S	II	(5) c
3. All Other Equipment	N	FB, RB	—	N	NS	
F12 Miscellaneous Servicing Equipment	N	FB, RB	—	N	NS	
F13 Reactor Pressure Vessel Servicing Equipment						
1. RPV head holding pedestal	N	RB	—	S	I	(5) c
2. All other RPV servicing equipment	N	RB	—	N	NS	
F14 RPV Internal Servicing Equipment	N	RB	—	N	NS	
F15 Refueling Equipment						
1. Fuel Handling Machine	N	FB	—	S	I	(5) a

Table 3.2-1

Classification Summary

Principal Components[1]	Safety Class.[2]	Location[3]	Quality Group[4]	Safety-Related Classification[5]	Seismic Category[6]	Notes
2. Refueling Machine	N	RB	—	S	I	(5) a
3. (Deleted)						
F16 Fuel Storage Racks						
1. Fuel storage racks - new and spent	N	RB, FB	—	S	I	(5) a
F17 Under-RPV Servicing Equipment	N	CV	—	N	NS	
F21 CRD Maintenance Facility	N	FB	—	N	NS	
F32 Fuel Cask Cleaning Facility	N	FB	—	N	NS	
F41 Plant Startup and Test Equipment	N	CV, RB, CB, TB, FB	—	N	NS	
F42 Fuel Transfer System (FTS)						
1. Transfer tube assembly from interface with upper fuel pool, through building to lower spent fuel pool terminus equipment, including drain connection	N	RB, FB	D	S	I	(5) a
2. Remaining equipment	N	RB, FB	D/—	S / N	II/NS	(5) c See Figure 9.1-2 for clarification of seismic classification boundaries. Seismic Category II items are Safety-Related Classification S.

Table 3.2-1

Classification Summary

Principal Components[1]	Safety Class.[2]	Location[3]	Quality Group[4]	Safety-Related Classification[5]	Seismic Category[6]	Notes
G DECAY HEAT REMOVAL NETWORK						
G21 Fuel and Auxiliary Pools Cooling System (FAPCS)						
1. Piping and valves including supports between containment isolation valves (including valves) for – Suppression pool return line – GDCS pool suction line – GDCS pool return line – Drywell spray discharge line	2	CV, RB	B	Q	I	
2. Piping between inboard manual valve and second outboard containment isolation valve on suppression pool suction line, as well as the low pressure coolant injection (LPCI) piping between the RWCU/SDC interface and the second isolation valve.	2	CV, RB	B	Q	I	
3. Independent line (including piping, valves, and supports) for safety-related makeup to IC/PCCS and spent fuel pools from piping connections at grade level in reactor yard area and to the fire protection system.	3	OO, RB, FB	C	Q	I	
4. GDCS pool interconnecting pipes	3	CV	C	Q	I	

Table 3.2-1

Classification Summary

Principal Components[1]	Safety Class.[2]	Location[3]	Quality Group[4]	Safety-Related Classification[5]	Seismic Category[6]	Notes
5. Piping and components outside containment needed for fuel pool cooling, suppression pool cooling, LPCI and drywell spray modes of operation including skimmer lines and all components in the cooling and cleanup trains.	N	RB, FB	B	S	II	(5) b, (5) c, (5) i – for RTNSS equipment, (5) k – for other risk-significant equipment
6. Suppression pool suction line inside containment between inboard manual valve and its termination point (including suction strainers)	N	CV	B	S	I	(5) b, (5) c, (5) i – for RTNSS equipment
7. Piping and valves inside containment between inboard containment isolation valves and their termination points inside containment for: – Suppression pool return line – Drywell spray discharge line	N	CV	C	S	I	(5) b, (5) c, (5) i – for RTNSS equipment
8. Piping and valves inside containment between inboard containment isolation valves and their termination points inside containment for: – GDCS pool suction line – GDCS pool return line	N	CV	D	S	II	(5) c
9. IC/PCCS pools active cooling and cleanup subsystem piping, and components.	N	RB	D	S	II	(5) c

Table 3.2-1

Classification Summary

Principal Components[1]	Safety Class.[2]	Location[3]	Quality Group[4]	Safety-Related Classification[5]	Seismic Category[6]	Notes
10. Auxiliary pools skimmer lines, and auxiliary pool return lines between isolation valves and terminus points, and all piping and mechanical components associated with pool liner leak detection.	N	RB, FB	D	N	NS	
11. Instrument sensing lines for the following parameters – IC/PCCS pool water level – Spent fuel pool level – Buffer pool level	3	RB, FB	C	Q	I	
12. Electrical modules and cables with safety-related function (containment isolation, LPCI isolation)	3	RB, CB, CV, FB	—	Q	I	
13. Electrical modules and cables with nonsafety-related function	N	RB, CB, FB	—	S	II	(5) c, (5) i – for RTNSS equipment, (5) j – for diverse protection equipment, (5) k – for other risk-significant equipment
14. Control and instrumentation required for safety-related functions	3	RB, CB	—	Q	I	
15. Controls and instrumentation required for nonsafety-related functions	N	RB, FB, CB	—	S	II	5) c, (5) i – for RTNSS equipment, (5) j – for diverse protection equipment, (5) k – for other risk-significant equipment

Table 3.2-1

Classification Summary

Principal Components[1]	Safety Class.[2]	Location[3]	Quality Group[4]	Safety-Related Classification[5]	Seismic Category[6]	Notes
G31 Reactor Water Cleanup/Shutdown Cooling (RWCU/SDC) System						
1. Piping including supports and valves in the mid-vessel pump suction line from the RPV up to but excluding the flow control valve and up to but excluding the last check valve in the Train A post-LOCA return line to the RPV	1	CV, RB	A	Q	I	(7)
2. Piping including supports and valves from feedwater lines to and including shutoff valves	2	RB	B	Q	I	(7) RWCU/SDC piping classification is consistent with piping to which it connects.
3. Vessels including supports (demineralizer)	N	RB	C	S	I	(5) b, (5) c
4. Regenerative heat exchangers (including supports) carrying reactor water	N	RB	C	S	I	(5) b, (5) c
5. Cleanup recirculation pump, motors	N	RB	C	S	I	(5) b, (5) c
6. Other piping including supports and valves from and including the flow control valve in the mid-vessel suction line and from and including the first motor-operated valve in the bottom head suction line to but excluding the motor-operated shutoff valves at feedwater line connections	N	RB	C	S	I	(5) b, (5) c, (7)
7. Nonregenerative heat exchanger tube side and piping (including supports and valves) carrying process water	N	RB	C	S	I	(5) b, (5) c

Table 3.2-1

Classification Summary

Principal Components[1]	Safety Class.[2]	Location[3]	Quality Group[4]	Safety-Related Classification[5]	Seismic Category[6]	Notes
8. Nonregenerative heat exchanger shell and piping (including supports and valves) carrying cooling water	N	RB	D	S	I	(5) c
9. Sample station	N	RB	D	S	I	(5) c
10. Electrical modules, cable and instrumentation with safety-related function	3	RB, CB	—	Q	I	
11. Electrical modules, cable and instrumentation with no safety-related function	N	RB, CB	—	S	II	(5) c, (5) j
12. Overboard line piping outside reactor building	N	TB	D	S	II	(5) b, (5) c
13. Cross-tie piping including supports and valves in the post-accident containment heat removal return line to FAPCS up to and including the spectacle flange	N	RB	C	S	I	(5) b, (5) c
14. Cross-tie piping including supports and valves in the post-accident containment heat removal return line to FAPCS from but excluding the spectacle flange up to and including the first downstream manual isolation valve	N	RB	C	S	II	(5) b, (5) c

Table 3.2-1

Classification Summary

Principal Components[1]	Safety Class.[2]	Location[3]	Quality Group[4]	Safety-Related Classification[5]	Seismic Category[6]	Notes
15. Cross-tie piping including supports and valves in the post-accident containment heat removal suction line from FAPCS from and including the first upstream manual isolation valve up to but excluding the spectacle flange	N	RB	C	S	II	(5) b, (5) c
16. Cross-tie piping including supports and valves in the post-accident containment heat removal suction line from FAPCS from and including the spectacle flange to the mid-vessel suction line	N	RB	C	S	I	(5) b, (5) c
17. Cross-tie piping including supports and valves up to and including the last check valve for post-accident return flow to mid vessel suction line	N	RB	C	S	I	(5) b, (5) c
18. Piping including supports and valves in the bottom head suction line from the RPV up to but excluding the first motor-operated valve, and up to and including the outboard isolation valve in the branch line to the sample station	1	CV, RB	A	Q	I	(7)

Table 3.2-1

Classification Summary

Principal Components[1]	Safety Class.[2]	Location[3]	Quality Group[4]	Safety-Related Classification[5]	Seismic Category[6]	Notes
H CONTROL PANELS						
H11 Main Control Room Panels						
1. Panels, electrical modules, and cable with safety-related function	3	CB	—	Q	I	**Control Panels** — Panels and associated structures that support or house safety-related mechanical or electrical components are safety-related.
2. Panels, electrical modules, and cable with no safety-related function	N	CB	—	S	II	(5) c
H12 MCR Back Room Panels						
1. Panels, electrical modules, and cable with safety-related function	3	CB	—	Q	I	**Control Panels** — Panels and associated structures that support or house safety-related mechanical or electrical components are safety-related.
2. Panels, electrical modules, and cable with no safety-related function	N	CB	—	S	II	(5) c
H14 Radwaste Control Room Panels	N	RW	—	S	NS	(5) d
H21 Local Panels and Racks						
1. Panels, electrical modules, and cable with safety-related function	3	ALL	—	Q	I	**Control Panels** – Panels and associated structures that support or house safety-related mechanical or electrical components are safety-related.
2. Panels, electrical modules, and cable with no safety-related function	N	ALL	—	N	NS	
J NUCLEAR FUEL						
J10 Core and Fuel Services	No physical items to be classified					

Table 3.2-1

Classification Summary

Principal Components[1]	Safety Class.[2]	Location[3]	Quality Group[4]	Safety-Related Classification[5]	Seismic Category[6]	Notes
J11 Nuclear Fuel	3	CV, RB, FB	—	Q	I	Nuclear fuel and channels are designed in accordance with NRC-approved methodology as described in chapters 4, 15 and Reference 3.2-9.
J12 Fuel Channel	3	CV, RB, FB	—	Q	I	See note for J11.
K RADIOACTIVE WASTE MANAGEMENT SYSTEMS						
K10 Liquid Waste Management System (LWMS)						
1. Mechanical modules (including supports)	N	RB, RW	D	S	NS	(5) d
2. Electrical modules and cabling	N	RB, RW	—	S	NS	(5) d
K20 Solid Waste Management System (SWMS)						
1. Mechanical modules (including supports)	N	RB, RW	D	S	NS	(5) d
2. Electrical modules and cabling	N	RB, RW	—	S	NS	(5) d
K30 Offgas System (OGS)	N	TB	D	S	NS	(5) d
N POWER CYCLE SYSTEMS						
N11 Turbine Main Steam System (TMSS)						
1. TMSS consists of the piping (including supports) for the MSL from the seismic interface restraint (or seismic guide) to the turbine stop valves (TSVs), turbine bypass valves and the connecting branch lines up to and including their isolation valves.	N	TB	B	S	II	(5) a **Main Steamlines** – TMSS lines are designed to ASME Section III Code, Class 2. Lines smaller than 63.5 mm (2.5 inches) are NS. Also see Figure 3.2-1.

Table 3.2-1

Classification Summary

Principal Components[1]	Safety Class.[2]	Location[3]	Quality Group[4]	Safety-Related Classification[5]	Seismic Category[6]	Notes
2. Other mechanical and electrical modules	N	TB	D	N	NS	
N21 Condensate and Feedwater System (C&FS)						
1. Main feedwater line beyond seismic interface restraint	N	TB	D	N	NS	See Figure 3.2-2
2. Electrical modules, cable and instrumentation associated with diverse protection functions	N	TB	—	S	NS	(5) j
N22 Heater Drain and Vent System (HDVS)	N	TB	—	N	NS	
N25 Condensate Purification System (CPS)	N	TB	D	N	NS	
N31 Main Turbine						
1. TSVs, turbine control valves (TCVs) and main steam leads from the TSVs to the turbine casing	N	TB	D	N	NS	(9)
2. All other system components	N	TB	—	N	NS	
N32 Turbine Generator Control System (TGCS)						
1. Electrical modules and cables associated with diverse protection functions	N	TB	—	S	NS	(5) j
2. All other components	N	TB	—	N	NS	
N33 Turbine Gland Seal System (TGSS)	N	TB	D	N	NS	
N34 Turbine Lube Oil System (TLOS)	N	TB	—	N	NS	

Table 3.2-1

Classification Summary

Principal Components[1]	Safety Class.[2]	Location[3]	Quality Group[4]	Safety-Related Classification[5]	Seismic Category[6]	Notes
N35 Moisture Separator Reheater (MSR)	N	TB	—	N	NS	
N36 Extraction System	N	TB	—	N	NS	
N37 Turbine Bypass System (TBS)	N	TB	D	S	NS	(5) c Analyzed to demonstrate structural integrity under SSE loading conditions. TMSS lines up to the turbine bypass valves are designed to ASME Section III Code, Class 2. Lines smaller than 63.5 mm (2.5 inches) are NS. Also see Figure 3.2-1.
N38 Turbine Hydraulics	N	TB	—	N	NS	
N39 Turbine Auxiliary Steam System (TASS)	N	TB	—	N	NS	
N41 Generator	N	TB	—	N	NS	
N42 Hydrogen Gas Control System (HGCS)	N	TB	—	N	NS	
N43 Stator Cooling Water System (SCWS)	N	TB	—	N	NS	
N44 Generator Lube and Seal Oil System (GLSOS)	N	TB	—	N	NS	
N45 Hydrogen and Carbon Dioxide Bulk Gas Storage System	N	OO	—	N	NS	
N51 Generator Excitation System (GES)	N	TB	—	N	NS	

Table 3.2-1

Classification Summary

Principal Components[1]	Safety Class.[2]	Location[3]	Quality Group[4]	Safety-Related Classification[5]	Seismic Category[6]	Notes
N61 Main Condenser and Auxiliaries						See Figure 3.2-1.
1. Condenser anchorage	N	TB	—	S	NS (see note)	(5) c The condenser anchorage is seismically analyzed for SSE.
2. Condenser air removal system	N	TB	D	N	NS	
3. All other main condenser and auxiliaries components	N	TB	—	N	NS	
N71 Circulating Water System (CIRC)	N	TB, OO	D	N	NS	
P STATION AUXILIARY SYSTEMS						
P10 Makeup Water System (MWS)						
1. Piping and valves (including supports) forming part of the containment boundary	2	CV, RB	B	Q	I	
2. Piping and valves inside containment or inside Reactor Building	N	CV, RB	D	S	II	(5) c
3. Other mechanical and electrical modules	N	OO, RW, RB, CB, SF	D	N	NS	
P21 Reactor Component Cooling Water System (RCCWS)						
1. Piping and valves inside Reactor and Fuel Buildings	N	RB, FB	D	S	II	(5) c, (5) i
2. Other mechanical and electrical modules	N	TB, RB, FB, EB	D	S / N	NS	(5) i – for RTNSS equipment
P22 Turbine Component Cooling Water System (TCCWS)	N	TB	D	N	NS	

Table 3.2-1

Classification Summary

Principal Components[1]	Safety Class.[2]	Location[3]	Quality Group[4]	Safety-Related Classification[5]	Seismic Category[6]	Notes
P25 Chilled Water System (CWS)						
1. Piping and valves (including supports) forming part of the containment boundary	2	CV, RB	B	Q	I	
2. Piping and valves inside containment and Reactor Building	N	CV, RB	D	S	II	(5) c, (5) i
3. Other mechanical and electrical modules	N	TB, RB, CB, FB, EB, RW	D	S / N	NS	(5) i – for RTNSS equipment
P30 Condensate Storage and Transfer System (CS&TS)						
1. Mechanical modules, including piping and valves, in Reactor Building	N	RB	D	S	II	(5) c
2. Other mechanical modules, including piping, valves, and condensate storage tank	N	OO, RW, TB	D	N	NS	
3. Electrical modules and cable	N	RB	—	N	NS	
P32 Oxygen Injection System (OIS)	N	TB	—	N	NS	
P33 Process Sampling System (PSS)	N	RB, OO, TB, RW	D	N	NS	(7)
P41 Plant Service Water System (PSWS)						
1. Mechanical and electrical modules, including piping and valves (including supports)	N	SF, OO, TB	D	S / N	NS	(5) i – for RTNSS equipment

Table 3.2-1

Classification Summary

Principal Components[1]	Safety Class.[2]	Location[3]	Quality Group[4]	Safety-Related Classification[5]	Seismic Category[6]	Notes
P51 Service Air System (SAS)						
1. Piping and valves (including supports) forming part of the containment boundary	2	CV, RB	B	Q	I	
2. Other system components	N	ALL	D	N	NS	
P52 Instrument Air System (IAS)	N	ALL	D	N	NS	
P54 High Pressure Nitrogen Supply System (HPNSS)						
1. Piping and valves (including supports) forming part of the containment boundary	2	CV, RB	B	Q	I	
2. Other Nonsafety-Related mechanical modules	N	RB	D	N	NS	
3. Other Nonsafety-Related electrical modules	N	RB, CB	—	N	NS	
4. Nitrogen storage bottles	N	RB	—	N	NS	
P62 Auxiliary Boiler System (ABS)	N	OL	—	N	NS	
P73 Hydrogen Water Chemistry System	N	TB	—	N	NS	The ESBWR Standard Plant design includes the capability to connect a Hydrogen Water Chemistry System, but the system itself is not part of the ESBWR Standard Plant design.
P74 Zinc Injection System	N	TB	D	N	NS	The ESBWR Standard Plant design includes the capability to connect a Zinc Injection System, but the system itself is not part of the ESBWR Standard Plant design.

Table 3.2-1

Classification Summary

Principal Components[1]	Safety Class.[2]	Location[3]	Quality Group[4]	Safety-Related Classification[5]	Seismic Category[6]	Notes
R STATION ELECTRICAL SYSTEMS						
R10 Electrical Power Distribution System (EPDS)						
1. Main transformers	N	OO	—	N	NS	
2. Main generators	N	TB	—	N	NS	
3. Reserve and unit auxiliary transformers	N	OO	—	N	NS	
4. Isolated phase bus duct	N	OO, TB	—	N	NS	
5. Non-segregated bus duct	N	OO, EB	—	N	NS	
6. Metal clad switchgear	N	RB, EB, TB, OL	—	N	NS	
7. Power centers	N	RB, EB, FB, TB, OL	—	N	NS	
8. Motor control centers	N	RB, EB, FB, CB, TB, OL	—	N	NS	
9. (Deleted)						
10. Other cable and supports with no safety function	N	CV, CB, RB, EB, TB, OL	—	N	NS	
R11 Medium Voltage Distribution System						
1. Power Generation (PG) buses	N	EB, TB, CP, OO	—	N	NS	
2. Plant Investment Protection (PIP) buses	N	EB, RB, TB, SF, ADB, RW, OO	—	S	NS	(5) i

Table 3.2-1

Classification Summary

Principal Components[1]	Safety Class.[2]	Location[3]	Quality Group[4]	Safety-Related Classification[5]	Seismic Category[6]	Notes
R12 Low Voltage Distribution System						
1. Components supporting distribution of power from Ancillary Diesel Generators to RTNSS Criterion B structures, systems and components	N	ADB, RB, FWSC, CB, SB	—	S	II	(5) c, (5) h
2. Components supporting distribution of power from Ancillary Diesel Generators to RTNSS non-Criterion B structures, systems and components	N	ADB, CB, SB, EB	—	S	NS	(5) i
3. Nonsafety-related components designated as risk significant but not RTNSS	N	RB, EB	—	S	NS	(5) k
4. All other components	N	ALL	—	N	NS	
R13 Uninterruptible AC Power Supply						
1. Electrical modules and cable with safety-related function	3	CV, CB, RB	—	Q	I	
2. Other electrical modules and cable with no safety function	N	CV, RB, CB, EB, TB, OL	—	S / N	NS	(5) h, (5) i – for RTNSS equipment, (5) k – for other risk-significant equipment
R15 Lighting and Servicing Power Supply						
1. Lighting	N	ALL	—	N	NS	Components of the lighting systems associated with safety-related systems and emergency exit lighting are supported to Seismic Category I requirements.

Table 3.2-1

Classification Summary

Principal Components[1]	Safety Class.[2]	Location[3]	Quality Group[4]	Safety-Related Classification[5]	Seismic Category[6]	Notes
2. Emergency lighting in main control room and remote shutdown system rooms	N	CB, RB	—	S	I	(5) c, (5) h Safety-related power is provided through isolation devices. The seismic classification applies to the supports for the lighting fixtures, not to the bulbs and fixtures.
R16 Direct Current Power Supply						
1. Electrical modules and cable with safety-related function	3	RB	—	Q	I	
2. Other electrical modules and cable with no safety function	N	EB, RB, TB, RW, SF, CP, OO, OL	—	S / N	NS	(5) h, (5) i – for RTNSS equipment, (5) k – for other risk-significant equipment
R21 Standby AC Power Supply						
1. Ancillary diesel generators and their support equipment	N	ADB	—	S	II	(5) c, (5) h
2. Standby diesel generators and their supporting equipment	N	EB	—	S	NS	(5) i
R31 Raceway System						
1. Conduit, cable trays and supports with safety-related function	3	CV, CB, RB, FB, TB	—	Q	I	
2. Other electrical modules with no safety function	N	CV, CB, RB, EB, TB, OL	—	S / N	NS	(5) h, (5) i – for RTNSS equipment
3. Electrical penetrations	3	CV, RB	—	Q	I	
R41 Plant Grounding System	N	OO	—	N	NS	

Table 3.2-1

Classification Summary

Principal Components[1]	Safety Class.[2]	Location[3]	Quality Group[4]	Safety-Related Classification[5]	Seismic Category[6]	Notes
R51 Communication System	N	ALL	—	S / N	NS	(5) c System components are mounted to Seismic Category II requirements in safety-related areas.
S POWER TRANSMISSION SYSTEMS						
S21 Switch Yard	N	OO	—	N	NS	
T CONTAINMENT AND ENVIRONMENTAL CONTROL SYSTEMS						
T10 Containment System						
1. Upper and lower drywell airlocks and equipment hatches, wetwell access hatch, and safety-related instrumentation	2	CV	B	Q	I	
2. Wetwell/drywell vacuum breakers	2	CV	B	Q	I	
3. Vacuum Breaker “Closed” Proximity Instrumentation	3	CV	—	Q	I	
4. Vacuum Breaker “Open” Proximity Instrumentation.	3	CV	—	Q	I	
5. Vacuum Breaker Isolation Valves	2	CV	B	Q	I	
6. Refueling bellows	N	CV	—	S	I	(5) c
7. Vacuum Breaker/Isolation Valve Temperature Sensor Instrumentation	3	CV	—	Q	I	
8. Basemat Internal Melt Arrest Coolability (BiMAC) device	N	CV	—	S	NS	(5) i
9. GDCS pool spillover pipes	N	CV	—	S	II	(5) c

Table 3.2-1

Classification Summary

Principal Components[1]	Safety Class.[2]	Location[3]	Quality Group[4]	Safety-Related Classification[5]	Seismic Category[6]	Notes
T11 Containment Vessel						
1. Drywell head	2	CV	B	Q	I	
2. Reinforced Concrete Containment Vessel (RCCV)	2	CV	B	Q	I	
3. Reactor pedestal (Part of RCCV)	2	CV	B	Q	I	
4. Portion of basemat under pedestal	2	CV	B	Q	I	
T12 Containment Internal Structures						
1. Reactor vessel support brackets and stabilizer support	3	CV	—	Q	I	
2. Support structures for safety-related piping, including supports and equipment	3	CV	—	Q	I	
3. Reactor shield wall	3	CV	—	Q	I	
4. Diaphragm floor	3	CV	—	Q	I	
5. GDCS pools	3	CV	—	Q	I	
6. Vent Wall	3	CV	—	Q	I	
T15 Passive Containment Cooling System (PCCS)						
1. All components other than vent fans and vent fan piping	2	CV	B	Q	I	
2. Vent fans and vent fan piping	N	CV	B	S	II	(5) b, (5) c, (5) h
T31 Containment Inerting System						
1. Piping and valves (including supports) forming part of the containment boundary	2	RB	B	Q	I	

Table 3.2-1

Classification Summary

Principal Components[1]	Safety Class.[2]	Location[3]	Quality Group[4]	Safety-Related Classification[5]	Seismic Category[6]	Notes
2. Electrical modules and cables with safety-related function	3	RB, CB	—	Q	I	
3. Other mechanical modules (including nitrogen storage tanks, and vaporizers), piping, valves, and electrical modules and cables with no safety function	N	RB, OO	—	N	NS	
4. Hardened containment vent line to RB/FB stack	N	RB	—	S	NS	(5) k
T41 Drywell Cooling System (DCS)	N	CV	—	S	II	(5) c
T49 Passive Autocatalytic Recombiner System (PARS)	N	CV	—	S	I	(5) c, (5) h
T62 Containment Monitoring System						
1. Mechanical components involved in containment isolation function	2	CV, RB	B	Q	I	
2. Other safety-related mechanical components	3	CV, RB, CB	C	Q	I	
3. Safety-related electrical modules, cables and instrumentation	3	CV, RB, CB	—	Q	I	
4. Electrical modules, cables and instrumentation supporting diverse protection functions	N	CV, RB, CB	—	S	II	(5) c, (5) j
5. Other nonsafety-related portions of system	N	CV, RB, CB	—	N	NS	
T64 Environmental Monitoring System	N	OL	—	N	NS	

Table 3.2-1

Classification Summary

Principal Components[1]	Safety Class.[2]	Location[3]	Quality Group[4]	Safety-Related Classification[5]	Seismic Category[6]	Notes
U STRUCTURES AND SERVICING SYSTEMS						
U31 Cranes, Hoists, and Elevators						
1. Reactor building cranes, fuel building crane	N	RB, FB	—	S	I	(5) a **Cranes** — The reactor building and fuel building cranes are designed to maintain their position and hold up their loads under conditions of an SSE.
2. Upper and lower drywell servicing hoists and cranes	N	CV	—	S	II	(5) c
3. Main steam tunnel servicing hoists and cranes	N	OL	—	S	II	(5) c
4. Special service rooms hoists and cranes	N	RB, TB, FB, RW	—	S or N	II or NS	(5) c Components must be seismic category II and Safety-Related Classification S if they can potentially damage safety-related equipment.
5. Elevators	N	RB, TB, FB, CB, RW, EB	—	N	NS	
U36 Electrical Building HVAC	N	EB	—	S / N	NS	(5) i – for RTNSS equipment
U37 Service Building HVAC	N	SB	—	N	NS	
U38 Radwaste Building HVAC	N	RW	—	S	NS	(5) d
U39 Turbine Building HVAC	N	TB	—	S / N	NS	(5) i – for RTNSS equipment
U40 Reactor Building HVAC						
1. Building isolation dampers	3	RB	—	Q	I	
2. Controls associated with the isolation dampers	3	RB	—	Q	I	

Table 3.2-1

Classification Summary

Principal Components[1]	Safety Class.[2]	Location[3]	Quality Group[4]	Safety-Related Classification[5]	Seismic Category[6]	Notes
3. (Deleted)						
4. Other system components	N	RB	—	S	II	(5) c, (5) i – for RTNSS equipment
U41 Other Building HVAC	N	OL	—	N	NS	
U42 Potable Water and Sanitary Waste System	N	CB, SB, EB, RB, OO, TB, OL	—	N	NS	
U43 Fire Protection System (FPS)						
1. Non-seismic yard piping and valves including supports (includes secondary piping in Turbine and other Buildings supplied by yard piping)	N	OO, OL, TB, EB, RW, SB	D	S	NS	(5) e
2. Seismic Category I piping and valves including supports providing source of makeup water to IC/PCCS and fuel pools	N	FWSC, OL	D	S	I	(5) c, (5) e, (5) h
3. Seismic Category II piping and valves including supports (includes balance of primary piping and valves)	N	FWSC, OL, RB, CB, FB	D	S	II	(5) c, (5) e
4. Primary firewater storage tanks	N	FWSC	D	S	I	(5) c, (5) e, (5) h
5. Secondary firewater storage	N	OO	D	S	NS	(5) e
6. (Deleted)						
7. Primary diesel-driven fire pump	N	FWSC	D	S	I	(5) c, (5) e, (5) h
8. Primary motor-driven fire pump	N	FWSC	D	S	II	(5) c, (5) e, (5) h
9. Other primary pumps	N	FWSC	D	S	II	(5) c, (5) e

Table 3.2-1

Classification Summary

Principal Components[1]	Safety Class.[2]	Location[3]	Quality Group[4]	Safety-Related Classification[5]	Seismic Category[6]	Notes
10. Primary diesel fire pump fuel tank	N	FWSC	—	S	I	(5) c, (5) e, (5) h
11. Other pumps and motors	N	OO	D	S	NS	(5) e
12. Electrical modules and cables for RB preaction sprinklers	N	RB	—	S	NS	(5) e
13. All other electrical modules and cables	N	ALL	—	S	NS	(5) e
14. (Deleted)						
15. Sprinklers	N	RB, TB, RW, SB, EB, OL	D	S	NS	(5) e
16. Foam, preaction or deluge	N	EB, TB, ADB, OO	—	S	NS	(5) e
U44 Sanitary Waste Discharge System	N	CB, SB, EB, RB, OO	—	N	NS	
U50 Equipment and Floor Drain System						
1. Piping and valves forming part of the containment boundary	2	CV, RB	B	Q	I	
2. Drain piping and valves, including supports, in Seismic Category I buildings	N	RB, FB	D	S	II	(5) c
3. Drain piping and valves, including supports, in other buildings	N	ALL except RB, FB	D	N	NS	
4. Other mechanical and electrical modules	N	ALL	—	N	NS	

Table 3.2-1

Classification Summary

Principal Components[1]	Safety Class.[2]	Location[3]	Quality Group[4]	Safety-Related Classification[5]	Seismic Category[6]	Notes
U51 Oily Waste Drain System	N	TB	—	N	NS	
U61 Auxiliary Boiler Building Structure	N	OO	—	N	NS	
U62 Auxiliary Boiler Building HVAC System	N	OL	—	N	NS	
U63 Firewater Service Complex Structure	N	FWSC	—	S	I	(5) c, (5) e, (5) h
U64 Firewater Service Complex HVAC System	N	FWSC	—	S	II	(5) c, (5) e
U65 Other Building Structures						
1. (Deleted)						
2. Other buildings	N	OO, OL	—	N	NS	
U66 Access Tunnel Structures	N	OL	—	S	II	(5) c
U67 Radwaste Tunnel	N	OL	—	S	NS	(5) d Structural acceptance and material criteria for the Radwaste Tunnel are in accordance with RG 1.143, Safety Classification RW-IIa.

Table 3.2-1

Classification Summary

Principal Components[1]	Safety Class.[2]	Location[3]	Quality Group[4]	Safety-Related Classification[5]	Seismic Category[6]	Notes
U68 Ancillary Diesel Building Structure	N	ADB	—	S	II	(5) c, (5) h
U69 Ancillary Diesel Building HVAC System	N	ADB	—	S	II	(5) c, (5) h
U71 Reactor Building Structure						
1. Main building	3	RB	—	Q	I	
2. Stair towers, equipment removal access shaft and elevator shafts	N	RB	—	S	II	(5) c
3. Equipment storage pool, reactor well and buffer pool liners	3	RB	—	Q	I	
U72 Turbine Building Structure	N	TB	—	S	II	(5) c
U73 Control Building Structure						
1. Main building	3	CB	—	Q	I	
2. Stair towers and elevator shaft	N	CB	—	S	II	(5) c
U74 Radwaste Building Structure	N	RW	—	S	NS	(5) d
U75 Service Building Structure	N	SB	—	S	II	(5) c
U77 Control Building HVAC						
1. Ducts, valves, and dampers (including supports) supporting safety-related areas	3	CB	—	Q	I	
2. Other ducts, valves and dampers (including supports)	N	CB	—	N	NS	
3. Electrical modules and cable with safety-related function	3	CB	—	Q	I	

Table 3.2-1

Classification Summary

Principal Components[1]	Safety Class.[2]	Location[3]	Quality Group[4]	Safety-Related Classification[5]	Seismic Category[6]	Notes
4. Control Room air handling units and the air conditioning for their coils	N	CB	—	S	II	(5) c, (5) h
5. Other Nonsafety-Related equipment	N	CB	—	N	NS	
6. Emergency Filter Unit	3	CB	—	Q	I	
7. Safety-Related DCIS (Q-DCIS) room coolers	N	CB	—	S	II	(5) c, (5) h
U78 Cold Machine Shop	N	OO	—	N	NS	
U80 Electrical Building Structure	N	EB	—	N	NS	
U81 Seismic Monitoring System	N	ALL	—	N	NS	
U84 Service Water Building Structure	N	SF	—	N	NS	
U85 Service Water Building HVAC	N	SF	—	N	NS	
U91 Administration Building Structure	N	OL	—	N	NS	
U93 Training Center	N	OL	—	N	NS	
U95 Hot Machine Shop	N	OO	—	N	NS	
U97 Fuel Building Structure						
1. Main building	3	FB	—	Q	I	
2. HVAC penthouse, stair towers and elevator shaft	N	FB	—	S	II	(5) c
3. Spent fuel pool liner	3	FB	—	Q	I	
U98 Fuel Building HVAC						
1. Building isolation dampers	3	FB	—	Q	I	
2. Ducting penetrating fuel building boundary	3	FB	—	Q	I	

Table 3.2-1

Classification Summary

Principal Components[1]	Safety Class.[2]	Location[3]	Quality Group[4]	Safety-Related Classification[5]	Seismic Category[6]	Notes
3. Controls associated with the isolation dampers	3	FB	—	Q	I	
4. Other system components	N	FB	—	S	II	(5) c, (5) i – for RTNSS equipment
W INTAKE STRUCTURE AND SERVICING EQUIPMENT						
W12 Intake and Discharge Structures	N	OO	—	N	NS	
W24 Cooling Tower	N	OO	—	N	NS	
W32 Screen Cleaning Facility	N	OO	—	N	NS	
W33 Screens, Racks, and Rakes	N	OO	—	N	NS	
W41 Intake Structure Power Supply	N	OO	—	N	NS	
Y YARD STRUCTURES AND EQUIPMENT						
Y12 Roads and Walkways	N	OO	—	N	NS	
Y21 Tanks and Equipment Pads	N	OO	—	N	NS	Some tanks in the yard area belong to other systems (e.g., firewater storage tank in U43) and have different classifications.
Y41 Station Water System	N	OO	—	N	NS	
Y46 Cathodic Protection System	N	OO	—	N	NS	
Y47 Meteorological Observation System	N	OO	—	N	NS	
Y51 Yard Miscellaneous Drain System	N	OO	—	N	NS	
Y52 Oil Storage and Transfer System						
1. System components supporting operation of ancillary diesel generators	N	ADB	—	S	II	(5) c, (5) h
2. All other system components	N	OO	—	N	NS	

Table 3.2-1

Classification Summary

Principal Components[1]	Safety Class.[2]	Location[3]	Quality Group[4]	Safety-Related Classification[5]	Seismic Category[6]	Notes
Y53 Chemical Storage and Transfer System	N	OO	—	N	NS	
Y71 Piping Duct						Classification of individual piping ducts matches the highest classification of the pipe they carry.
1. Concrete Trench/Tunnel for Seismic Category I and II FPS Piping	N	OL	--	S	I/II	(5) c
2. Other Piping Duct	N	OL	--	N	NS	
Y72 Cable Duct						Classification of individual cable ducts matches the highest classification of the cables they carry.
1. Concrete duct banks between RB and CB	3	OL	--	Q	I	
2. Concrete duct banks between ancillary diesel building and other structures	N	OL	--	S	II	(5) c
3. Other Cable Duct	N	OL	--	N	NS	
Y86 Site Security	N	ALL	—	N	NS	

Notes:

(1) Principal components: A module is an assembly of interconnected components that constitute an identifiable device or piece of equipment. For example, electrical modules include sensors, power supplies, and signal processors; and mechanical modules include turbines, strainers, and orifices.

(2) Safety Class: 1, 2, 3 or N are designations for safety-related or nonsafety-related as discussed in Subsection 3.2.3.

(3) Location codes:

ALL	=	All locations	ADB	=	Ancillary Diesel Building
CV	=	Containment Vessel	RW	=	Radwaste Building
CB	=	Control Building	CP	=	Circulating Water Pump House
RB	=	Reactor Building	SF	=	Service Water Building
OO	=	Outdoors Onsite	TB	=	Turbine Building
OL	=	Any Other Location	EB	=	Electrical Building
FB	=	Fuel Building	SB	=	Service Building
FWSC	=	Firewater Service Complex			

(4) Quality group classifications: A, B, C, or D are quality groups defined in Regulatory Guide 1.26, as discussed in Subsection 3.2.2. The principal components are classified, designed, and constructed in accordance with the requirements identified in Tables 3.2-2 and 3.2-3. The designation "—" indicates that the quality groups A through D are not applicable to the associated principal component.

(5) Safety-Related Classification: The designation "Q" indicates that the quality assurance requirements of 10 CFR 50, Appendix B, are applied in accordance with the quality assurance program described in Chapter 17. The designation "S" indicates that special quality assurance requirements are applied, commensurate with the importance of the item's function for one or more of the following reasons:

a. Nonsafety-related structures, systems and components for which 10 CFR 50 Appendix B quality assurance requirements are to be fully applied.

b. Nonsafety-related structures, systems and components required to be designed in accordance with Quality Group B or C requirements from RG 1.26. See note (4).

c. Nonsafety-related structures, systems and components required to be designed in accordance with special seismic design requirements, such as Seismic Category I or II requirements. See note (6).

d. Nonsafety-related structures, systems and components required to be designed in accordance with Radioactive Waste Management requirements from RG 1.143 for Category RW-IIa (see Subsection 3.7.2.8.2 for further details on the design of the Radwaste Building and structures, systems and components housed inside the Radwaste Building). A quality assurance program meeting the guidance of NRC Regulatory Guide 1.143, as applied to radioactive waste management systems, is described in Chapter 17. The Radioactive Waste Management System components conform to Regulatory Guide 1.143 Table 1. For radwaste processing systems, Regulatory Guide 1.143 Table 1 modifies Regulatory Guide 1.26 Table 1 Quality Group D. This modification is acceptable per Standard Review Plan 3.2.2 Appendix C Note (9). Applicable portions of Regulatory Guide 1.143 Table 1 are reprinted in Chapter 11, Table 11.2-1. Exceptions to RG 1.143 requirements for the design of the radwaste building are defined in Chapter 2, Table 2.0-1.

e. Nonsafety-related structures, systems and components required to be designed in accordance with Fire Protection requirements from 10 CFR 50.48 and RG 1.189. A quality assurance program meeting the guidance of NRC Branch Technical Position SPLB 9.5-1 (NUREG-0800) is applied to the protection system. Also, special seismic qualification requirements are applied.

f. Nonsafety-related structures, systems and components required to be designed in accordance with ATWS requirements from 10 CFR 50.62. A quality assurance program that meets or exceeds the guidance of NRC Generic Letter 85-06 is applied to all nonsafety-related ATWS equipment.

g. Nonsafety-related structures, systems and components required to be designed in accordance with Station Blackout requirements from 10 CFR 50.63 and RG 1.155.

h. Nonsafety-related structures, systems and components required to be designed in accordance with RTNSS Criterion B requirements as specified in Appendix 19A.

i. Nonsafety-related structures, systems and components assigned to RTNSS criteria other than Criterion B that are required to be designed in accordance with RTNSS requirements as specified in Appendix 19A.

j. Nonsafety-related structures, systems and components associated with the performance of Diverse I&C functions that are required to be designed in accordance with a quality assurance program that meets or exceeds the guidance of NRC Generic Letter 85-06 as specified in Subsection 7.8.3.

k. Nonsafety-related structures, systems and components designated as risk significant, but that are not designated as RTNSS.

The designation "N" indicates that standard nonsafety-related quality assurance requirements are applied. See Subsection 17.1.22 for further details on the safety-related classification system.

(6) Seismic category: The designations "I" or "II" indicate that the design requirements of Seismic Category I or II structures and equipment are applied as described in Subsection 3.2.1 and Section 3.7, Seismic Design. Structures and equipment that are not designated "I" or "II" are designated "NS."

(7) Small Piping and Instrument Lines — Lines 25 mm (one inch) and smaller in diameter that are part of the RCPB are Quality Group B and meet the requirements of the ASME B&PV Code, Section III, Class 2 and Seismic Category I, with the exceptions noted below:

Instrument lines that are connected to the RCPB and are used to actuate or monitor safety-related systems are Quality Group B from the outer isolation valve or the process shutoff valve (root valve) to the sensing instrumentation. Instrument lines that are connected to the RCPB and are not used to actuate and monitor safety-related systems are nonsafety-related and Quality Group D from the outer isolation valve or the process shutoff valve (root valve) to the sensing instrumentation. Other instrument lines meet the following requirements:

- Through the root valve: the lines are the same classification as the system to which they are attached.

- Beyond the root valve, if used to actuate a safety-related system: the lines are the same classification as the system to which they are attached.
- Beyond the root valve, if not used to actuate a safety-related system: the lines may be Quality Group D.

Sample lines from the outer isolation valve or the process root valve through the remainder of the sampling system may be Quality Group D.

Safety-related instrument lines comply with the guidance of NRC Regulatory Guide 1.151.

(8) HCU for CRD system — Each HCU is a factory-assembled, engineered module of valves, tubing, piping, and stored water that controls two CRDs by the application of pressure and flow to accomplish rapid insertion for reactor scram.

Although each HCU is field installed as a unit and connected to process piping, many of its internal parts differ markedly from process piping and components because of the more complex functions of the HCUs. Thus, although the codes and standards invoked by the different quality groups (A, B, C and D) apply to the interfaces between the HCUs and connections to conventional piping components (e.g., pipe nipples, fittings, hand valves, etc.), they are not considered applicable to the specialty parts (e.g., solenoid valves, pneumatic components, and instruments).

However, the design and construction specifications for the HCUs do invoke such codes and standards as can be reasonably applied to individual parts in developing required quality levels. For example: (1) all welds are inspected using liquid penetrant, (2) all socket welds are inspected for gaps between the pipe and socket bottom, (3) all welding is performed by qualified welders, and (4) all work is performed in accordance with written procedures. Quality Group D is generally applicable because the codes and standards invoked by that group permit the use of manufacturer's standards and proven design techniques that are not explicitly defined within the codes for Quality Groups A, B or C. This is supplemented by appropriate quality control (QC) techniques.

(9) Main Turbine —Turbine steam leads from the stop valves to the inlet nozzles, including stop and control valves, are Quality Group D and designed to withstand the SSE and maintain its pressure-retaining integrity.

All cast pressure-retaining parts of a size and configuration for which volumetric methods are effective are examined by radiographic methods by qualified personnel. Ultrasonic examination to equivalent standards is used as an alternative to radiographic methods. Examination procedures and acceptance standards are at least equivalent to those defined in Paragraph 136.4, Nonboiler External Piping, ASME B31.1.

The following qualifications are met with respect to the certification requirements:

a. The manufacturer of the turbine stop valves, turbine control valves, turbine bypass valves, and main steamlines from turbine control valve to turbine casing uses quality control procedures at least equivalent to those defined in GE Publication GEZ-4982A, General Electric Large Steam Turbine Generator Quality Control Program.
b. A certification obtained from the manufacturer of these valves and steam lines demonstrates that the quality control program as defined has been accomplished.

The following requirements are applied in addition to the Quality Group D requirements:

a. All longitudinal and circumferential butt weld joints are radiographed (or ultrasonically tested to equivalent standards). Where size or configuration does not permit effective volumetric examination, magnetic particle or liquid penetrant examination may be substituted. Examination procedures and acceptance standards are at least equivalent to those specified as supplementary types of examinations, Paragraph 136.4 in ASME B31.1.

b. All fillet and socket welds, and all structural attachment welds to pressure-retaining materials are examined by either magnetic particle or liquid penetrant methods. Examination procedures and acceptance standards are at least equivalent to those specified as supplementary types of examinations, Paragraph 136.4 in ASME B31.1.

c. All inspection records are maintained for the life of the plant. These records include data pertaining to qualification of inspection personnel, examination procedures, and examination results.

Table 3.2-2

Minimum Safety Class Requirements

Safety Class	Minimum Design Requirements for Specific Safety Class				
	Quality Group	ASME B&PV Section III Code Class	Seismic Category[1]	Electrical Classification[2]	Quality Assurance[4]
1	A	1	I	N/A	10 CFR 50 Appendix B
2	B	2, CC, MC or CS	I	N/A	10 CFR 50 Appendix B
3	C	3	I	Class 1E	10 CFR 50 Appendix B
N	D[3]	N[5]	II or NS	Non-Class 1E	—

1 Seismic Category I structures, systems, and components meet the design and analysis requirements of Section 3.7. Some safety-related items (e.g., pipe whip restraints) have no safety-related function in the event of an SSE and are Seismic Category II.

2 Safety-related electrical equipment and instrumentation meet the design requirements of Institute of Electrical and Electronics Engineers (IEEE) Class 1E (as well as Seismic Category I). Some nonsafety-related electrical equipment and instrumentation are optionally designed to IEEE Class 1E requirements as noted in Table 3.2-1.

3 Some nonsafety-related structures, systems, and components are optionally designed to Quality Group B or C requirements, as designated in Table 3.2-1. Nonsafety-Related structures, systems, and components that are not assigned a quality group are designed to requirements of applicable industry codes and standards (see Subsection 3.2.3.4).

4 Safety-related (Safety Class 1, 2 and 3) structures, systems, and components meet the quality assurance requirements of 10 CFR 50, Appendix B, as described in Chapter 17. Nonsafety-Related (N) structures, systems and components meet quality assurance requirements as defined in the quality assurance program that are commensurate with the importance of the equipment's function. Structures, systems and components designated as Safety-Related Class S in Table 3.2-1 have special quality assurance requirements consistent with the portions of Note (5) that are referred to in the Notes column. See Subsection 17.1.22 for further details.

5 Nonsafety-related reactor internal structures subject to the requirements of ASME B&PV Code Section III, Division 1, Subsection NG, are assigned to Class IS.

Table 3.2-3

Quality Group Designations – Codes and Industry Standards

Quality Group Classification	ASME BPVC Section III Code Classes	Pressure Vessels and Heat Exchangers[4]	Pipes, Valves, and Pumps	Storage Tanks (0-103 kPaG) 0-15 psig	Storage Tanks Atmospheric	ASME BPVC Section III Component Supports	Non-ASME BPVC Section III Component Supports	Core Support Structures and Reactor Internals	Containment Boundary
A	1	NCA and NB TEMA C	NCA and NB	—	—	NCA and NF	—	—	—
B	2	NCA and NC TEMA C	NCA and NC	NCA and NC	NCA and NC	NCA and NF	—	—	—
	CC[1] and MC	—	—	—	—	—	—	—	NCA, CC[1], and NE
	CS	—	—	—	—	—	—	NCA and NG	
C	3	NCA and ND TEMA C	NCA and ND	NCA and ND	NCA and ND	NCA and NF	—	—	—
D	—	ASME BPVC Sect. VIII Division 1 TEMA C	ASME B31.1 for piping and valves[2]	API-620 or equivalent[3]	API-650 AWWA-D100 ASME B96.1 or equivalent[3]	—	Manufacturer's Standards, e.g., ASME B31.1, AISC	—	—

1. RCCV is designed to Subsection CC in ASME BPVC, Section III, Division 2.
2. For pumps classified in Quality Group D, the ASME B&PV Code, Section VIII, Division 1 is used as a guide in determining the wall thickness for pressure-retaining parts and in sizing the cover bolting.
3. Tanks are designed to meet the intent of American Petroleum Institute (API), American Water Works Association (AWWA), and/or ASME B96.1 standards, as applicable.
4. For heat exchangers, both the ASME Code and Tubular Exchanger Manufacturers' Association (TEMA) C must be taken into account.

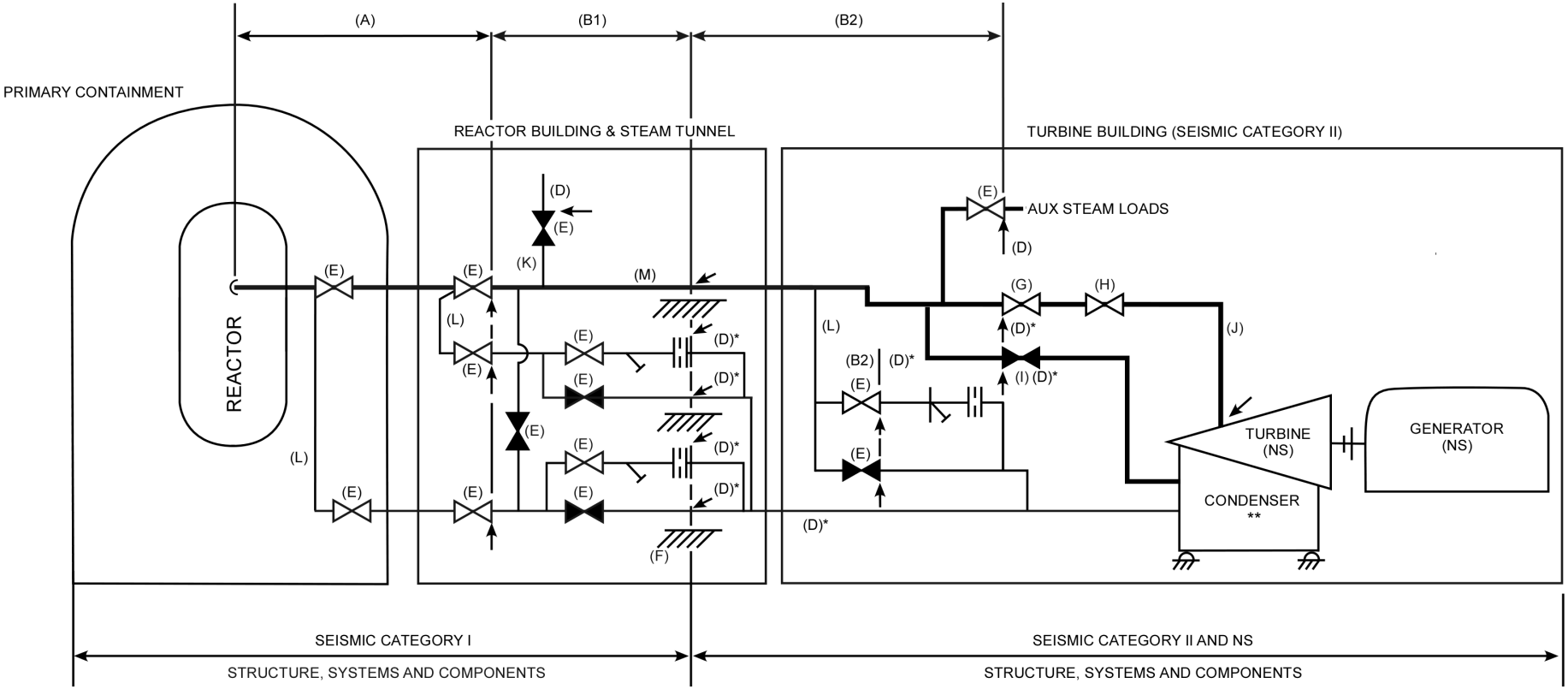

LEGEND:

A.	QUALITY GROUP A	I.	TURBINE BYPASS VALVE	* ANALYZED TO DEMONSTRATE STRUCTURAL INTEGRITY UNDER SSE LOADING CONDITIONS FOR MSIV LEAKAGE PATH
B 1.	QUALITY GROUP B	J.	MAIN STEAM LEAD	** CONDENSER SUPPORTS AND ANCHORS ARE DESIGNED TO MAINTAIN CONDENSER INTEGRITY FOLLOWING SSE FOR MSIV LEAKAGE HOLDUP VOLUME.
B 2.	QUALITY GROUP B, SEISMIC CATEGORY II	K.	INSTRUMENT BRANCH LINE	
D.	QUALITY GROUP D	L.	DRAIN LINE	
E.	ISOLATION VALVE	M.	STEAM LINE	
F.	SEISMIC INTERFACE RESTRAINT	NS	SEISMIC CATEGORY NS	
G.	TURBINE STOP VALVE	↙	CLASSIFICATION CHANGE	
H.	TURBINE CONTROL VALVE			

Figure 3.2-1. Quality Group and Seismic Category Classification Applicable to Power Conversion System

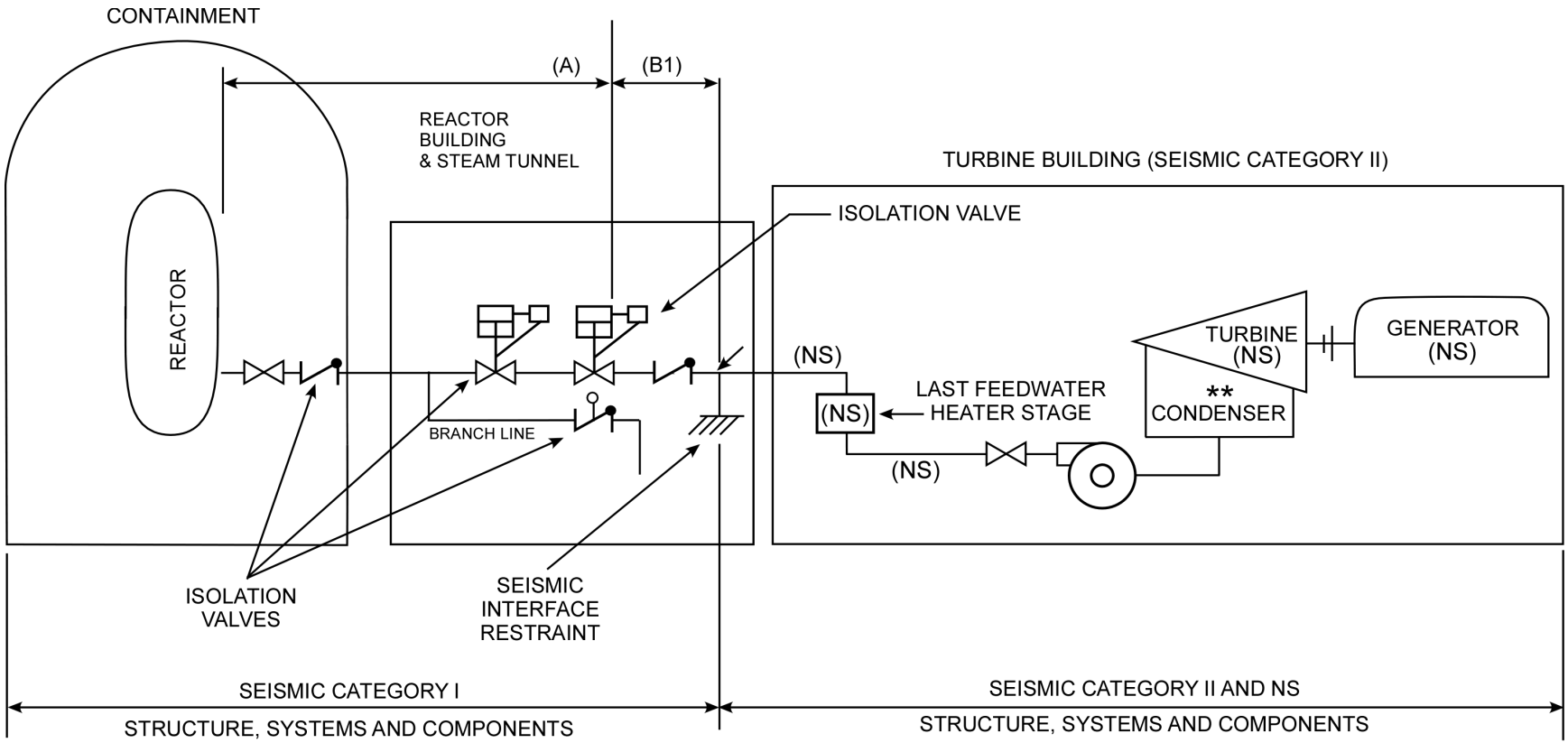

Note: See Figure 3.2-1 for Legend.

Figure 3.2-2. Quality Group and Seismic Category Classification Applicable to Feedwater System

3.3 WIND AND TORNADO LOADINGS

Seismic Category I structures are designed for tornado and extreme wind phenomena. Seismic Category II structures are designed for extreme and tornado wind (excluding tornado missiles).

3.3.1 Wind Loadings

As discussed in Standard Review Plan (SRP) 3.3.1, the design wind velocity and its recurrence interval, the velocity variation with height, and the applicable gust factors are used in defining the input parameters for the structural design criteria appropriate to account for wind loadings. The procedures that are utilized to transform the design wind velocity into an effective pressure applied to structures take into consideration the geometrical configuration and physical characteristics of the structures and the distribution of wind pressure on the structures.

The design of structures that must withstand the effects of the design wind load consider the relevant requirements of General Design Criterion 2 concerning natural phenomena. The wind used in the design includes the most severe wind that has been historically reported for the site and surrounding area with sufficient margin for the limited accuracy, quantity, and period of time in which historical data has been accumulated. Appropriate consideration has been given for the design wind velocity and its recurrence interval, the velocity variation with height, the applicable gust factors, and the bases for determining these site-related parameters. The procedures utilized to transform the wind velocity into an effective pressure applied to structures and parts and portions of structures, are as delineated in Reference 3.3-1.

3.3.1.1 Design Wind Velocity and Recurrence Interval

Seismic Category I and II structures are designed to withstand the design wind velocity listed in Table 2.0-1. The recurrence interval listed in Table 2.0-1 is equivalent to an importance factor of 1.15 based on Category IV building.

Seismic Category NS buildings that house RTNSS equipment are designed to withstand hurricane Category 5 wind velocity at 87.2 m/s (195 mph), 3-second gust, instead of wind speed listed in Table 2.0-1.

3.3.1.2 Determination of Applied Forces

The design wind velocity is converted to velocity pressure in accordance with Reference 3.3-1 with Exposure Category D.

The design wind velocity for use in the ESBWR is listed in Table 2.0-1. Reference 3.3-2 is used to obtain the effective wind pressures for geometric and physical cases that Reference 3.3-1 does not cover.

3.3.1.3 Effect of Failures of Structures or Components Not Designed for Wind Loads

Safety-related systems and components are protected within wind-resistant structures. The remainder of plant structures and components not designed for extreme wind loads are arranged or designed such that their failures do not adversely affect the ability of any Seismic Category I structures, systems, and components to perform their safety-related function(s).

3.3.2 Tornado Loadings

As discussed in SRP 3.3.2, the design of structures that have to withstand the effects of the design basis tornado are in conformance with the requirements of General Design Criterion 2.

3.3.2.1 Applicable Design Parameters

The design basis tornado and applicable missiles are described in Table 2.0-1.

3.3.2.2 Determination of Forces on Structures

The procedures of transforming the tornado loading into effective loads and the distribution across the structures are in accordance with Reference 3.3-3. The velocity pressure used meets the SRP 3.3.2 discussion. The procedure for transforming the tornado-generated missile impact into an effective or equivalent static load on structures is given in Subsection 3.5.3. The loading combinations of the individual tornado loading components and the load factors are in accordance with SRP 3.3.2.

Loading combinations and load factors used are as follows:

$W_t = W_w$

$W_t = W_p$

$W_t = W_m$

$W_t = W_w + 0.5\ W_p$

$W_t = W_w + W_m$

$W_t = W_w + 0.5\ W_p + W_m$

Where:

W_t = total tornado load

W_w = tornado wind load

W_p = tornado differential pressure load

W_m = tornado missile load

The Reactor Building, Fuel Building, and Control Building are not vented (enclosed) structures. The exposed exterior roofs and walls of these structures are designed for the full pressure drop. Tornado dampers are provided on Control Building EFU air intake openings. These dampers are designed to withstand the full negative pressure drop.

All Control Room Habitability Area ventilation penetrations for outside air intake and exhaust openings are provided with tornado protection. In addition, the Control Building Heating, Ventilation and Air Conditioning System outside air intake and return/exhaust openings are provided with tornado protection.

3.3.2.3 Effect of Failures of Structures or Components Not Designed for Tornado Loads

Safety-related systems and components are protected within tornado-resistant structures. The remainder of plant structures and components not designed for tornado loads are arranged or designed such that their failures do not adversely affect the ability of any Seismic Category I

structures, systems and components to perform their safety-related function(s). Any nonsafety-related, non-seismic structure postulated to fail under tornado loading is located at least a distance of its height above grade from Seismic Category I structures. The Radwaste Building (RW) is designed for tornado wind loads. Refer to Table 2.0-1 for tornado wind speed, radius, pressure drop and rate of pressure drop for the RW. Refer to RG 1.143 for tornado missile spectrum for the RW.

3.3.3 References

3.3-1 American Society of Civil Engineers, "Minimum Design Loads for Buildings and Other Structures," ASCE Standard 7-2002, Committee A. 58.1, American National Standards Institute.

3.3-2 American Society of Civil Engineers, "Wind Forces on Structures," ASCE Paper No. 3269, Transactions of the American Society of Civil Engineers," Vol. 126, Part II, 1961.

3.3-3 Bechtel Topical Report BC-TOP-3-A, Revision 3, "Tornado and Extreme Wind Design Criteria for Nuclear Power Plants," August 1974.

3.4 WATER LEVEL (FLOOD) DESIGN

Design of the plant flood protection includes all structures, systems and components (SSCs) whose failure could prevent safe shutdown of the plant or result in uncontrolled release of significant radioactivity to assure conformance with the requirements of General Design Criterion 2.

3.4.1 Flood Protection

This section describes the plant flood protection for all SSCs whose failure could prevent safe shutdown of the plant or result in uncontrolled release of significant radioactivity to assure conformance with the requirements of General Design Criterion 2. The analysis identifies the safety-related SSCs that must be protected against flooding from both external and internal causes to:

- Demonstrate the capabilities of structures housing safety-related systems or equipment to withstand flood considerations; that is, the relationship between structure elevation and flood elevation including waves and wind effects as described in Table 2.0-1;
- Assess the adequacy of the isolation of redundant safety-related systems or equipment subject to flooding, including possible inleakage sources, such as: (i) cracks in structures not designed to withstand seismic events and (ii) exterior or access openings or penetrations in structures located at a lower elevation than the flood level and associated wave activity.

The analysis also includes consideration of flooding from internal sources of safety-related SSCs from failure of tanks, vessels, and piping. The flooding analysis also considers the water-related effects of piping failures, while dynamic effects are addressed in Section 3.6.

The flood protection measures meet specific GDC and regulatory guides. The plant design for protection of SSCs from the effects of flooding considers the relevant requirements of General Design Criterion 2, "Design Bases for Protection Against Natural Phenomena," and 10 CFR Part 50, Appendix S, "Earthquake Engineering Criteria for Nuclear Power Plants," Section IV.(c) as related to protecting safety-related SSCs from the effects of floods, water waves and other design conditions. The design meets the guidelines of Regulatory Guide (RG) 1.59 with regard to the methods utilized for establishing the probable maximum flood (PMF), probable maximum precipitation (PMP), seiche and other pertinent hydrologic considerations; and the guidelines of RG 1.102 regarding the means utilized for protection of safety-related SSCs from the effects of the PMF and PMP. If safety-related structures need to be protected from below-grade groundwater seepage by means of a permanent dewatering system, then the system would be designed as a safety-related system and would meet the single failure criterion requirements. However, the ESBWR does not require a safety-related permanent dewatering system. The design criteria for protection against the effects of compartment flooding meet ANSI/ANS 56.11 (Reference 3.4-1), "Design Criteria for Protection Against the Effects of Compartment Flooding in Light Water Reactor Plants". This subsection discusses the flood protection design and operational measures that are applicable to the plant Seismic Category I SSCs and addresses both external flooding and postulated internal flooding from plant piping failures, fire fighting, and other sources.

3.4.1.1 Flood Protection Summary

The safety-related systems and components of the ESBWR standard plant are located in the Seismic Category I structures that provide protection against external flood and groundwater damage. External flood design considerations for safety-related systems and components are provided for the postulated flood and groundwater levels and conditions described in Tables 2.0-1 and 3.4-1.

The Seismic Category I structures that house safety-related systems and equipment and that offer flood protection are described in Section 3.8. All exterior access openings are above flood level and exterior penetrations below design flood and groundwater levels are appropriately sealed.

The internal flood analysis evaluates whether a single pipe failure, a fire fighting event or other flooding source, as described in Subsection 3.4.1.4, could prevent safe reactor shutdown. In all cases, system components are located above the flood level or are capable of operating in a flooded environment. Appropriate means are provided to prevent flooding compartments that house redundant system trains or divisions. Some of the mechanisms used to minimize flooding are structural barriers or compartments; curbs and elevated thresholds, at least 200 mm (8 in) high; and a leak detection system. See Subsection 3.4.1.3 for further discussion.

3.4.1.2 Flood Protection From External Sources

Safety-related systems and components are protected from exterior sources (e.g., floods, groundwater) because they are located above design flood level or because they are enclosed in groundwater protected concrete structures.

The Seismic Category I structures that may be subjected to the design basis flood are designed to withstand the flood level and groundwater level stated in Table 2.0-1. This is done by locating the design plant grade elevation at least 300 mm (1 ft.) above the design flood level and by incorporating structural provisions into the plant design to protect the SSCs from the postulated flood and groundwater conditions.

These provisions include:

- Walls below flood level designed to withstand hydrostatic loads.
- Water stops provided in all expansion and construction joints below design basis maximum flood and groundwater levels.
- Waterproofing of external surfaces below design basis maximum flood and groundwater levels.
- Water seals at pipe penetrations below design basis maximum flood and groundwater levels.
- Roofs designed to prevent pooling of large amounts of water in accordance with RG 1.102.
- No exterior access openings below grade.

The flood protection measures that are described above are not only for external natural floods but also guard against flooding from onsite storage tank rupture. Such tanks are designed and

constructed to minimize the risk of catastrophic failure and are located to allow drainage without damage to site facilities.

Because plant grade is above design flood level, the Seismic Category I structures remain accessible during postulated flood events (See Table 3.4-1). Thus, no emergency actions are required due to flooding to ensure the safe operation of the ESBWR plant.

3.4.1.3 Internal Flooding Evaluation Criteria

All safety-related components that affect the safe shutdown of the plant are located in the Reactor Building (RB) and Control Building (CB). Redundant systems and components are physically separated from each other and from nonsafety-related systems. If the failure of a system results in one division being inoperable, a redundant division is available to perform the safe shutdown of the plant. Protective features used to mitigate or eliminate the consequences of internal flooding are:

- Structural enclosures or barriers;
- Curbs and sills;
- Leakage detection components; and
- Drainage systems.

The internal flooding analysis, besides identifying flooding sources, equipment in each area, and effect on safety-related equipment and maximum flood levels, also considers the following criteria:

- A flooding alarm in the main control room is followed by operator action within 30 minutes to identify the flooding source.
- Fire fighting events are considered assuming that fuel inventory for the fire is limited to a 1-hour event, during which two 7.9 l/s (125 gpm) fire hoses are in service.
- A single active failure of flood mitigating systems is assumed, following the initiating events, as required in ANSI/ANS 56.11 (Reference 3.4-1).
- No credit is taken for the drainage system or operation of the drain sump pumps for flooding mitigation, although they are expected to operate during some of the postulated flooding events.
- The free surface considered in each flooding zone is reduced by at least 10% due to space utilization by components located in that zone.

As established in Section 3.6, the moderate energy piping leakage failure is assumed to be a circular opening with a flow area equal to one-half of the outside pipe diameter multiplied by one-half of the pipe nominal wall thickness. Resulting leakage flow rates are calculated using normal operating pressure in the pipe.

The Fire Protection System (FPS) headers from the FPS pumps are routed outside Seismic Category I buildings. Floors are assumed to prevent water seepage to lower levels.

Spray damage is avoided by appropriate location of equipment or pipe or by providing protection from water spray. Doors and penetrations rated as 3 hour barriers are assumed to prevent water spray from crossing divisional boundaries.

All safety-related equipment within the Containment that must operate during or after a design basis accident is qualified for LOCA environmental conditions. Flooding associated with the postulated failure of any moderate energy pipe is within the bounds of the LOCA qualification. Consequently, no detailed evaluation of this less severe event is required to verify the effect on safety-related equipment or safe plant shutdown capability as a result of moderate energy piping failures in the Containment.

3.4.1.4 Evaluation of Internal Flooding

Leakage from pipe breaks and cracks, fire hose discharges and other flooding sources are collected by the floor drainage system, stair towers and elevator shafts and discharged to appropriate sumps. The flood level is evaluated taking into consideration the flow paths described above.

The RB and CB drain collection system and sumps are designed and separated so that drainage from a flooded compartment containing equipment for a train or division does not flow to compartments containing equipment for another system train or division. Zones that are isolated by watertight doors provide physical separation. Watertight doors between flood divisions have open/close sensors with status indication and alarms in the main control room. The location of the zones prevents two redundant trains from being affected by the flooding at the same time.

The following flooding sources are considered in the analysis:

- High energy piping breaks and cracks;
- Moderate energy piping through-wall cracks;
- Pump mechanical seal failures;
- Storage tank ruptures;
- Actuation of the FPS; and
- Flow from upper elevations and nearby areas.

Through-wall cracks are considered in seismically supported, moderate energy piping as well as breaks and through-wall cracks in non-seismically supported moderate energy piping in the flooding analysis.

The analysis is performed based on the criteria and assumptions provided in Section 3.6 and ANS-56.11 (Reference 3.4-1). Section 3.6 provides the criteria used to define break and crack locations and configurations for high and moderate-energy piping failures. Additional design criteria pertaining to the internal flooding analysis are provided in this section.

No breaks are assumed for piping with nominal diameters of 25 mm (1 in.) or less. For flooding analysis, in case of storage tank rupture, it is assumed that the entire tank inventory is drained.

Safety-related equipment and equipment necessary for safe shutdown is located above the maximum flood level or is qualified for flood conditions. Accordingly, flooding due to moderate

energy pipe failure or fire fighting or other flooding sources does not affect any safety-related equipment and the ability to safely shut down the plant.

3.4.1.4.1 Control Building

There are no tanks or high-energy piping in the CB and the more relevant moderate-energy fluid system piping, i.e. FPS and Chilled Water System (CWS), is seismically qualified. The main source of floodwater is from the fire protection standpipe hose stations. A nominal volume of 57 m^3 (15,000 gal) is provided for the FPS considering two 7.9 l/s (125 gpm) fire hoses are in service for one (1) hour. This results in a flooding level in the lowest floor of the CB of 40 cm (16 in) in the corridors, stair towers and elevator rooms, assuming that the water propagates into these rooms by flowing through embedded drains and under the doors. This maximum water depth is below the Distributed Control and Information System (DCIS) room floor elevation; see Figure 1.2-2 (Rooms 3110, 3120, 3130 and 3140).

To prevent flooding in the Control Room Habitability Area (CRHA) emergency ventilation equipment from failures of liquid carrying systems in the Heating, Ventilation and Air Conditioning rooms, the water is routed by the installation of 300 mm (12 in) high curbs in the access doors, chases and other floor openings, as well as by normally closed isolation valves in the drain lines and elevated thresholds in the access doors to CRHA emergency ventilation equipment, to discharge the potential flooding water to the building stairwells.

In addition, for further protection, the DCIS room access doors are watertight. Normally closed valves are installed in the drain pipes of the DCIS rooms. Moreover, the access doors from the access tunnel to the CB at Elevation -2000 are watertight.

Therefore, the separation of electrical trains in independent zones, along with measures to direct the water to drains, maintains the safety function of the systems housed in the CB.

There is no flooding hazard in the main control room because the potential flood water from chilled water portion inside CRHA envelope is detected and isolated.

3.4.1.4.2 Reactor Building

The potential sources of water in the RB include the Reactor Component Cooling Water System (RCCWS); CWS; Reactor Water Cleanup/Shutdown Cooling (RWCU/SDC) system; Control Rod Drive (CRD) system, including the CRD pump suction from the Condensate Storage and Transfer System (CS&TS) and Condensate and Feedwater System (C&FS); FPS; Fuel and Auxiliary Pools Cooling System (FAPCS); Makeup Water System (MWS); and Standby Liquid Control (SLC) system.

The large number of pools in the ESBWR is contained within thick concrete walls designed for maximum hydrostatic loads combined with seismically induced hydrodynamic loads. GDCS pools inside containment are similarly contained within robust structural members designed for hydrostatic loads combined with seismically induced hydrodynamic loads. These pools are not considered as potential sources of flood.

The piping of the RCCWS, CWS, CRD pump suction (from CS&TS/C&FS), MWS, and FPS are seismically analyzed. These are moderate energy fluid systems and therefore only through-wall pipe cracks are considered.

The maximum flooding volume expected is from a through-wall pipe crack in the FPS or in the FAPCS suction lines from the suppression pool. The flooding volume from either of these sources is greater than flooding due to any failure in high and moderate energy piping or tanks.

The maximum volume of the suppression pool for flooding is limited to the difference between the maximum level and the anti-siphoning provision in the suction line elevation.

This results in a flood level of 20 cm (8 in) in the RB lower elevation. This maximum flood level is lower than the CRD Hydraulic Control Unit (HCU) room elevation, see Figure 1.2-1 (rooms 1110, 1120, 1130 and 1140). Other safety-related components in the lower elevation are located above the maximum flood level. Therefore, no flood in this RB elevation could affect the safety-related equipment or plant's safe shutdown capability.

For further protection, the HCU room access doors and the access doors to the RB at El. -1000 are watertight.

The SLC system accumulators for Division 1 and 2 are located in fully independent rooms in El. 17500 of the RB. Therefore, SLC system high energy pipe break or tank failure flooding of one division cannot affect the other.

Flooding in the electrical rooms is limited to the actuation of the FPS. The separation of the electrical trains in independent zones, along with measures to direct the water to drains, maintains the safety function of the systems housed in the RB.

The main steam tunnel contains the main steam and main feedwater piping and their isolation valves. In the event of a feedwater pipe break or leak in the main steam tunnel, water is drained to the Turbine Building (TB). The safety-related components in the main steam tunnel are located above the maximum flood level or are designed to function when flooded.

3.4.1.4.3 Adjacent Flooding Events

- **Turbine Building**. – There are no components in the TB that could affect the safe shutdown of the reactor.

  The TB is subject to flooding from a variety of potential sources including the Circulating Water System (CIRC), C&FS, PSWS, RCCWS, TCCWS, CWS and FPS.

  The bounding flooding source for the TB is a CIRC pipe or expansion joint failure. Level switches are located in the TB to limit flooding in the TB in the event of a failure in the CIRC (see Subsection 10.4.5.6). In any case, flooding in the TB could not affect the RB or CB because a 1.5 m (4.9 ft.) high flooding barrier is provided in the access tunnel to the RB and CB (see Figure 1.2-13). A hypothetical massive flooding in the TB would run out of the building to the yard through relief panels.

- **Fuel Building (FB) –** There are no safety-related components in the FB that could be affected by flooding in the FB. The FPS, CWS, RCCWS, FAPCS, MWS and CS&TS (including Condensate Storage Tank) are the primary sources of flooding in the FB. In any case, flooding in the FB could not affect the RB because the connection points in the lower elevation are watertight.

- **Radwaste Building –** The Radwaste Building (RW) does not contain safety-related equipment. The radwaste tunnel and other connections with the CB and RB are designed

to prevent flooding from spreading in the RW to CB or RB. The primary sources of flooding in the RW are the LWMS, the building drain systems, RWCU/SDC, FAPCS, CPS, CS&TS, CWS and FPS. In case of flooding, the building substructure serves as a large sump that can collect and hold any leakage within the building.

- **Electrical Building (EB)** – There are no safety-related components in the EB. The flooding water in a nonsafety-related diesel generator room is discharged outside via the equipment access door.

  The primary sources of flooding in the EB are the FPS, CWS and RCCWS (nonsafety-related diesel generator rooms). The main source of floodwater is due to an FPS piping failure. A flooding barrier is provided at the Nuclear Island access tunnel EB access door. In addition, for further protection the access doors to the RB and CB are watertight.

3.4.2 Analysis Procedures

The following paragraphs describe the design of Seismic Category I structures to withstand the effects of the maximum external flood and highest groundwater levels specified for the plant. The maximum flood and highest groundwater levels are considered in defining the input design parameters for the structural design to account for flood and groundwater loadings. Because the ESBWR standard plant is located at a site where the flood level is below the finished ground level around Seismic Category I structures, the dynamic phenomena associated with a flooding event, such as currents, wind waves, and their hydrodynamic effects, are not considered. The values for the maximum flood and maximum groundwater level parameters are provided in Table 2.0-1. The procedures utilized to transform the static and dynamic effects of the maximum flood and highest groundwater levels, that is, the design flood level and design ground water level, into effective loads applied to Seismic Category I structures are discussed in this subsection.

The design of ESBWR structures complies with the relevant requirements of GDC 2 concerning natural phenomena. The values for site parameters used in the design of Seismic Category I structures were selected to envelope the actual characteristics at most sites. Table 2.0-1 ensures that the site meets the following:

(1) The highest flood and highest groundwater levels, including any dynamic effects, are the most severe that have been historically reported for the site and surrounding area, with sufficient margin for the limited accuracy, quantity, and period of time in which the historical data have been accumulated.

(2) The highest flood or highest groundwater level for the plant is below the finished ground level as shown in Table 3.4-1.

(3) Because the highest flood level of the plant is below the finished ground level, only hydrostatic effects need to be considered. The hydrostatic pressure associated with the design flood level or with the design groundwater level is considered as a structural load on the basemat and basement walls. Uplift or floating of the structure is considered and the total buoyancy force is based on the hydrostatic pressure due to the design flood level, excluding wave action, or the design groundwater level. The lateral, overturning and

upward hydrostatic pressures acting on the side walls and on the foundation slab, respectively, are also considered in the structural design of these elements.

Because the design flood elevation is below the finished ground level (Table 3.4-1), there are no dynamic forces due to flood. The lateral hydrostatic pressures on the structures due to the design flood level, as well as ground water and soil pressure, are factored into the structural design in accordance with SRP 3.4.2. See Appendix 3G, Design Details and Evaluation Results of Seismic Category I Structures.

3.4.3 COL Information

None.

3.4.4 References

3.4-1 ANSI/ANS 56.11-1988, "Design Criteria for Protection Against the Effects of Compartment Flooding in Light Water Reactor Plants".

Table 3.4-1 Structures, Penetrations and Access Openings Designed for Flood Protection

	Reactor & Fuel Buildings mm (ft.)	Control Building mm (ft.)
Building Elevation	El. 52700 (172.9)	El. 13500 (44.3)
Design Plant Grade	El. 4650 (15.3)	El. 4650 (15.3)
Finished Ground Level Grade	El. 4500 (14.8)	El. 4500 (14.8)
Design Flood Level	El. 4350 (14.3)	El. 4350 (14.3)
Design Groundwater Level	El. 4040 (13.3)	El. 4040 (13.3)
Top of Basemat	El. –11500 (-37.7)	El. -7400 (-24.3)
Penetrations Below Design Flood Level	Sealed	Sealed
Access Openings Below Design Flood Level	None (except at RB access to CB at tunnel)	None (except at CB access to RB at tunnel)

3.5 MISSILE PROTECTION

The missile protection design basis for Seismic Category I structures, systems and components (SSCs) is described in this section. A tabulation of SSCs (both inside and outside containment), their location, seismic category, and quality group classification is given in Table 3.2-1. General arrangement drawings showing locations of the SSCs are presented in Section 1.2.

Missiles considered are those that could result from a plant-related failure or incident including failures within and outside of containment, environmental-generated missiles and site-proximity missiles. The structures, shields, and barriers that are designed to withstand missile effects, the possible missile loadings, and the procedures to which each barrier is designed to resist missile impact are described in detail.

3.5.1 Missile Selection and Description

Components and equipment are designed to have a low potential for generation of missiles as a basic safety precaution. In general, the design that results in reduction of missile-generation potential promotes the long life and usability of a component and is well within permissible limits of accepted codes and standards.

Seismic Category I structures are analyzed and designed to be protected against a wide spectrum of missiles. For example, failure of certain rotating or pressurized components of equipment is considered to be of sufficiently high probability and to presumably lead to generation of missiles. However, the generation of missiles from other equipment is considered to be of low enough probability and is dismissed from further consideration. Tornado-generated missiles and missiles resulting from activities particular to the site are also discussed in this section. The missile protection criteria to which the plant has been designed consider Criterion 4 of 10 CFR 50 Appendix A, General Design Criteria for Nuclear Power Plants.

Potential missiles that have been identified are listed and discussed in later subsections.

After a potential missile has been identified, its statistical significance is determined. A statistically significant missile is defined as a missile that could cause unacceptable plant consequences or violation of the limits of 10 CFR 52.47(a)(2)(iv).

The examination of potential missiles and their consequences is done in the following manner to determine statistically significant missiles:

- If the probability of occurrence of the missile, P_1, is determined to be less than 10^{-7} per year, the missile is dismissed from further consideration because at that likelihood it is considered not to be a statistically significant risk.
- If P_1 is found to be greater than 10^{-7} per year, it is examined for its probability of impacting a design target P_2.
- If the product of P_1 and P_2 is less than 10^{-7} per year, the missile is dismissed from further consideration.
- If the product of P_1 and P_2 is greater than 10^{-7} per year, the missile is examined for its damage probability P_3. If the combined probability (i.e., $P_1 \times P_2 \times P_3 = P_4$) is less than 10^{-7} per year, the missile is dismissed.

- Finally, measures are taken to design acceptable protection against missiles with P_4 greater than 10^{-7} per year to reduce P_1, P_2, and/or P_3, so that P_4 is less than 10^{-7} per year.

Many practices used in the fabrication, construction and inspection of equipment as well as conservative design criteria result in very robust components that are inherently missile resistant. These practices are used in making the design missile-proof.

Protection of SSCs is afforded by one or more of the following practices:

- Location of the system or component in an individual missile-proof structure;
- Physical separation of redundant systems or components of the system from the missile trajectory path or calculated range;
- Provision of localized protection shields or barriers for systems or components;
- Design of the particular structure or component to withstand the impact of the most damaging missile;
- Provision of design features on the potential missile source to prevent missile generation; and/or
- Orientation of the potential missile source to prevent unacceptable consequences caused by missile generation.

The following criteria are adopted to provide an acceptable design basis for the plant's capability to withstand the statistically significant missiles postulated inside the Reactor Building:

- No loss of containment function as a result of missiles generated internal to containment.
- Reasonable assurance that a safe plant shutdown condition can be achieved and maintained.
- Offsite exposure within the 10 CFR 52.47(a)(2)(iv) limits for those potential missile damage events resulting in radiation activity release.
- The failure of nonsafety-related equipment, components, or structures whose failure could result in a missile, do not cause failure of more than one division of safety-related equipment.
- No high energy lines are located near Off-Gas Charcoal Bed Adsorbers (located in the Turbine Building).

The systems requiring protection are as follows:

(1) Reactor coolant pressure boundary;

(2) Automatic Depressurization System relief valves;

(3) Passive Containment Cooling System;

(4) Isolation Condenser;

(5) Gravity Driven Cooling System;

(6) Control Rod Drive scram system (hydraulic and electrical);

(7) Reactor Protection System;

(8) All containment isolation valves;

(9) Electrical and control systems and wiring required for operation of items (1) through (8); and

(10) Remote shutdown panel.

The following general criteria are used in the design, manufacture, and inspection of equipment:

- All pressurized equipment and sections of piping that may periodically become isolated under pressure are provided with pressure-relief valves acceptable under ASME Code Section III. The valves ensure that no pressure buildup in equipment or piping sections exceeds the design limits of the materials involved.
- Components and equipment of the various systems are designed and built to the standards established by the ASME Code or other equivalent industrial standards. A stringent quality control program is also enforced during manufacture, testing, and installation.
- Volumetric and ultrasonic testing, where required by code, coupled with periodic in-service inspections of materials used in components and equipment, add further assurance that any material flaws that could permit the generation of missiles are detected.

3.5.1.1 Internally Generated Missiles (Outside Containment)

This subsection addresses SSCs provided to support the reactor facility, and that require protection from internally generated missiles (outside containment) to ensure conformance with the requirements of General Design Criterion 4. The design addresses concerns for missiles that could result from in-plant component overspeed failures and high-pressure system ruptures as discussed in SRP 3.5.1.1, when applicable.

3.5.1.1.1 Rotating Equipment

3.5.1.1.1.1 Missile Characterization

Equipment within the general categories of pumps, fans, blowers, diesel generators, compressors, turbines, and, in particular, components in systems normally functioning during power reactor operation, are examined for any possible source of credible and significant missiles.

3.5.1.1.1.2 Main Steam Turbine

The main turbine has a favorable turbine generator placement and orientation relative to placement of the containment. The arrangement adheres to the guidelines presented in Regulatory Guide (RG) 1.115 and meets position C1 therein. The ESBWR turbine generator placement and orientation are shown in Figure 3.5-2. See Subsection 10.2.4 for additional evaluation.

Regulatory Treatment of Non-Safety Systems (RTNSS), Category B functions, as listed in DCD Table 19A-2 and 19A-3, and structures, systems and components listed in Regulatory Guide 1.117 Appendix including the Independent Fuel Storage Installation are not within the low-trajectory turbine missile strike zone as defined in Regulatory Guide 1.115 and shown in Figure 3.5-2. Therefore barriers to protect this equipment, or the safety-related equipment, listed in Section 10.2, from low-trajectory turbine missile strikes are not required.

Favorable turbine generator placement and orientation, combined with quality assurance in design and fabrication, maintenance and inspection programs as provided in Section 10.2, and overspeed protection systems, provide an acceptably small risk from turbine missiles. The probability of turbine missile generation, P_1, is less than 1×10^{-5} per year. This is less than the required value provided in Table 3.5-1. See Section 10.2 for a discussion of turbine missile analysis, turbine inspection, test and maintenance program, and turbine missile probability calculations.

3.5.1.1.1.3 Other Missile Analysis

No remaining credible missiles meet the significance criteria of having a probability, P_4, greater than 10^{-7} per year for rotating or pressurized equipment, because either:

- The equipment design and manufacturing criteria mentioned previously result in P_1 being less than 10^{-7} per year; or
- Sufficient physical separation (barriers and/or distance) of safety-related and redundant equipment exists so that the combined probability, $P_1 \times P_2$, is less than 10^{-7} per year.

The configuration of components is robust as required by ASME Code.

These conclusions are arrived at by noting that pumps, fans, and the like are AC powered. Their speed is governed by the frequency of the AC power supply. Because the AC power supply frequency variation is limited to a narrow range, it is not likely that these components could attain an overspeed condition. At rated speed, if a component's piece such as a fan blade breaks off, it would not penetrate the casing. As an example, a typical containment high purge exhaust fan used in previous applications has been analyzed for a thrown blade at rated speed conditions using an analytical expression from Reference 3.5-2. It is determined, based on the maximum thickness this blade could penetrate, that the blade would not escape the fan casing and consequently P_1 is less than 10^{-7} per year.

3.5.1.1.2 Pressurized Components

3.5.1.1.2.1 Missile Characterization

Potential missiles that could result from the failure of pressurized components are addressed in this subsection. These potential missiles are categorized as contained fluid energy missiles or stored-energy (elastic) missiles. These potential missiles are conservatively evaluated against the design criteria in the following subsections.

Examples of potential contained fluid-energy missiles are valve bonnets, valve stems, and retaining bolts. Valve bonnets are considered jet-propelled missiles and have been analyzed as such. Valve stems are analyzed as piston-type missiles, while retaining bolts are examples of stored strain-energy missiles.

3.5.1.1.2.2 Missiles Analyses

Pressurized components outside the containment capable of producing missiles have been reviewed. Although piping failures could result in dynamic effects if permitted to whip, they do not form missiles as such because the whipping section remains attached to the remainder of the

pipe. Section 3.6 addresses the dynamic effects associated with pipe breaks, so pipes are not included here as potential internal missiles.

All pressurized equipment and sections of piping that may periodically become isolated under pressure are provided with pressure-relief valves acceptable under the ASME Code, Section III.

The only remaining pressurized components considered to be potentially capable of producing missiles are as follows:

- Valve bonnets (large and small);
- Valve stems;
- Pressure vessels;
- Thermowells;
- Retaining bolts; and
- Blowout panels.

3.5.1.1.2.2.1 Valve Bonnets

Valves of ANSI 900 Pressure Class and above are constructed in accordance with the ASME Code, Section III and are pressure-seal bonnet-type valves. Valve bonnets are prevented from becoming missiles by limiting stresses in the bolting to those defined by the ASME Code and by designing flanges in accordance with applicable code requirements. Safety factors involved against failure of these type bonnets are sufficiently high that these pressure seal-type valves are not considered a potential missile source (Reference 3.5-3).

Most valves of ANSI 600 Pressure Class rating and below are valves with bolted bonnets. These type valves are analyzed for the safety factors against failure, and, coupled with the low historical incidents of complete severance failure, are determined to not be a potential missile source (Reference 3.5-3).

3.5.1.1.2.2.2 Valve Stems

Isolation valves installed in the reactor coolant systems have stems with back seats, which eliminates the possibility of ejecting valve stems even if the stem threads fail. Because a double failure of highly reliable components would be required to produce a valve stem missile, the overall probability of occurrence is less than 10^{-7} per year. Hence, valve stems are dismissed as a source of missiles.

3.5.1.1.2.2.3 Pressure Vessels

Moderate energy vessels less than 1.9 MPaG (275 psig) are not credible missile sources. The pneumatic system air bottles and components are designed for 17.2 MPaG (2500 psig) and the standby liquid control accumulator tank is designed for 17.2 MPaA (2500 psia) to the ASME Code, Section III requirements. These bottles are not considered a credible source of missiles for the following qualitative analysis:

- The bottles are fabricated from heavy-wall rolled steel.

- The operating orientation is vertical with the ends facing concrete slabs. The bottles are topped with steel covers thick enough to preclude penetration by a missile.
- The fill connection and critical parts are protected by a permanent steel collar.
- The bottles are strapped in a rack to prevent them from toppling over. The rack is seismically designed to the ASME Code, Section III, Subsection NF requirements.

3.5.1.1.2.2.4 Thermowells

Thermowells are welded to sockolet connections, which in turn are welded to the wall of the pipe. An analysis of a postulated failure of this weld is performed as follows. The following expression relates the missile displacement and velocity following the postulated failure:

$$\frac{y}{W/A} = \upsilon_\infty \left[\ln\left(\frac{1}{1 - V/u_\infty} \right) - \frac{V}{u_\infty} \right], \qquad \text{(Reference 3.5-1)}$$

where:

y = distance traveled by the missile from the break

W = missile weight

A = frontal area of missile

u_∞ =asymptotic velocity of jet

υ_∞ = asymptotic specific volume of jet

V = velocity of missile

Inherently, the water and steam velocities are equal (i.e., a unity velocity ratio) in a saturated water blowdown. The jet asymptotic velocity (u_∞) and the jet asymptotic specific volume are determined by the methods described by Reference 3.5-4. The corresponding velocity-displacement relationships for missiles resulting from saturated water and saturated steam blowdowns are presented in Figure 3.5-1. The ordinate is the missile velocity, V, and the abscissa is the displacement parameter, Y*, given by:

$$Y^* = \frac{y}{(W/A)}$$

Included in Figure 3.5-1 is the influence of different values on the friction parameter, f*, defined by:

$$f^* = \left(\frac{f1}{D}\right)_P \left(\frac{A_E}{A_p}\right)^2$$

where:

$\left(\frac{f1}{D}\right)_P$ = equivalent loss coefficient between the broken pressurized component and fluid reservoir, dimension-less

A_E = area of break,

A_p = area of pressurized component between break and fluid reservoir (assumes $A_p > A_E$)

As illustrated in Figure 3.5-1, the effect of friction on the velocity-displacement relationship is reasonably small. It can be conservatively assumed that the most extreme friction condition persists with f* = 100 for the case of saturated water blowdown and f* = 0 for the case of saturated steam blowdown.

A typical thermowell weighs about 0.91 kg (2 lbs). Based on ejection by steam at 7.2 MPa (1044 psia), the ejection velocity could reach 61 m/s (200 ft/s), which is not sufficient to inflict significant damage to critical systems. P_4 is therefore less than 10^{-7} per year.

3.5.1.1.2.2.5 Retaining Bolts

Nuts, bolts, nut and bolt combinations, and nut and stud combinations have a small amount of stored energy and are of no concern as potential missiles.

3.5.1.1.2.2.6 Blowout Panels

Blowout panels are hinged to prevent them from becoming missiles. Guard rails for personnel protection are provided where required by the swing pattern. Thus by design, P_2 is less than 10^{-7} per year.

3.5.1.1.3 Missile Barriers and Loadings

Credit is taken in some cases of rotating and pressurized components generating missiles for missile-consequence mitigation by structural walls and slabs. These walls and slabs are designed to withstand internal missile effects; the applicable seismic category and quality group classification are listed in Section 3.2. Penetration of structural walls by internally generated missiles is not considered credible.

3.5.1.2 Internally Generated Missiles (Inside Containment)

Internal missiles are those resulting from plant equipment failures within the containment. Potential missile sources from both rotating equipment and pressurized components are considered, when applicable.

3.5.1.2.1 Rotating Equipment

By an analysis similar to that in Subsection 3.5.1.1.1, it is concluded that no items of rotating equipment inside the containment have the capability of generating potential missiles.

3.5.1.2.2 Pressurized Components

Identification of potential missiles and their consequences outside containment are specified in Subsection 3.5.1.1.2. The same conclusions are drawn for pressurized components inside containment. For example, the ADS accumulators are moderate energy vessels and are therefore not considered a credible missile source. Another group of items is Fine Motion Control Rod Drives (FMCRDs) under the reactor vessel. The FMCRD mechanisms are not credible missiles.

The FMCRD housings are designed (Section 4.6) to prevent any significant nuclear transient in the event of a drive housing break.

3.5.1.2.3 Evaluation of Potential Gravitational Missiles Inside Containment

Gravitational missiles inside the containment are considered as follows:

Seismic Category I systems, components, and structures are not potential gravitational missile sources.

Non-Seismic items and systems inside containment are considered as follows:

- Cable Trays - All cable trays for both safety-related and nonsafety-related circuits are seismically supported whether or not a hazard potential is evident.
- Conduit and Nonsafety-Related Pipe - Nonsafety-related conduit is seismically supported if it is identified as a potential hazard to safety-related equipment. All nonsafety-related piping that is identified as a potential hazard is seismically analyzed per Subsection 3.7.3.8.
- Equipment for Maintenance - All other equipment, such as a hoist, that is required during maintenance is either removed during operation, moved to a location where it is not a potential hazard to safety-related equipment, or seismically restrained to prevent it from becoming a missile. This is ensured by plant procedures as described in Section 13.5.

3.5.1.3 Turbine Missiles

See Subsection 3.5.1.1.1.2.

3.5.1.4 Missiles Generated by Natural Phenomena

This subsection considers possible hazards due to missiles generated by the design basis tornado, flood, and any other natural phenomena identified in Section 3.5.

Tornado generated missiles are determined to be the limiting natural phenomena hazard in the design of all structures required for safe shutdown of the nuclear power plant. Because tornado missiles are used in the design basis, they envelop missiles generated by less intense phenomena such as extreme winds. See Reference 3.5-8.

The design basis tornado and missile spectrum as defined in Table 2.0-1 is included in the design of Seismic Category I buildings, and is in compliance with positions C1 and C2 of RG 1.76, "Design Basis Tornado for Nuclear Power Plants," positions C1, C2, and C3 of RG 1.117, "Tornado Design Classification," Position C2 of RG 1.13, "Spent Fuel Storage Facility Design Basis," and positions C2 and C3 of RG 1.27, "Ultimate Heat Sink for Nuclear Power Plants."

Since Seismic Category I buildings are designed to resist tornado missiles for their full height (See Table 2.0-1), their resistance to missiles is independent of site topography.

Non-tornado resistant building superstructures are constructed from materials such as reinforced concrete block, and/or structural steel with metal siding and roof deck. Potential missiles or debris from these materials, resulting from failure of superstructure or from items blown off, when subjected to winds of tornado intensity, are not considered to generate missiles more severe than the Spectrum I missiles of SRP 3.5.1.4 in accordance with Reference 3.5-8.

3.5.1.5 Site Proximity Missiles (Except Aircraft)

The site is selected such that the probability of occurrence of the site proximity missile (except aircraft) is less than 10^{-7} occurrences per year. The site proximity missile has been dismissed from further consideration because at that likelihood it is considered not to be a statistically significant risk.

3.5.1.6 Aircraft Hazards

The probability of aircraft hazards impacting the ESBWR Standard Plant and causing consequences greater than 10 CFR 52.47(a)(2)(iv) exposure limits is < about 10^{-7} per year.

3.5.2 Structures, Systems, and Components to be Protected from Externally Generated Missiles

This subsection discusses the SSCs to be protected from externally generated missiles and includes all safety-related SSCs on the plant site that are provided to support the reactor facility.

The sources of external missiles, which could affect the safety of the plant, are identified in Subsection 3.5.1. Certain items in the plant are required to safely shut down the reactor and maintain it in a safe condition assuming an additional single failure. These items, whether they are structures, systems or components, must all be protected from externally generated missiles.

These items are the safety-related items listed in Table 3.2-1; appropriate safety classes and equipment locations are given in this table. All of the safety-related systems listed are located in buildings that are designed as tornado resistant. Because the tornado missiles are the design basis missiles, the SSCs listed are adequately protected. Provisions are made to protect the Off-Gas Charcoal Bed Adsorbers, Seismic Category I portions of the Fire Protection System (FPS) and components of Fuel and Auxiliary Pool Cooling System that transport makeup water to Spent Fuel Pool and Isolation Condenser/Passive Containment Cooling Pools from the FPS against tornado missiles.

3.5.3 Barrier Design Procedures

The procedures by which structures and barriers are designed to resist the missiles described in Subsection 3.5.1 are presented in this section. The following procedures are in accordance with Subsection 3.5.3 of NUREG-0800 (Standard Review Plan) and ensure that the design of structures, shields, and barriers that must withstand the effects of environmental and natural phenomena meet the relevant requirements of GDC 2 and GDC 4.

3.5.3.1 Local Damage Prediction

The prediction of local damage in the impact area depends on the basic material of construction of the structure or barrier (i.e., concrete or steel). The corresponding procedures are presented separately.

3.5.3.1.1 Concrete Structures and Barriers

Sufficient thickness of concrete is provided to prevent perforation, spalling or scabbing of the barriers in the event of missile impact. The (modified) National Defense Research Committee formula (Reference 3.5-5) is applied analytically for missile penetration in concrete. To prevent

perforation, ACI-349 Appendix C Section C.7 is used. The resulting thickness of concrete required to prevent perforation, spalling or scabbing is no less than that for Region I listed in Table 1 of SRP 3.5.3.

3.5.3.1.2 Steel Structures and Barriers

The Stanford equation (Reference 3.5-6) is applied for steel structures and barriers. Composite barriers are not utilized in the ESBWR Standard Plant for missile protection.

3.5.3.2 Overall Damage Prediction

The overall response of a structure or barrier to missile impact depends largely upon the location of impact (e.g., near mid-span or near a support), dynamic properties of the structure/barrier and missile, and on the kinetic energy of the missile. In general, it is assumed that the momentum of the missile is transferred to the structure or barrier and only a portion of the kinetic energy is absorbed as strain energy within the structure or barrier.

After demonstrating that the missile does not perforate the structure or barrier, an equivalent static load concentrated at the impact area is determined. The structural response to this load, in conjunction with other appropriate design loads, is evaluated using an analysis procedure provided in Reference 3.5-7.

The maximum allowable ductility ratios for steel and reinforced concrete given in ANSI/AISC N690-1994 including Supplement 2 (Reference Number 15 of Table 3.8-6) and RG 1.142 respectively are met.

3.5.3.3 Impact of Failure of Nonsafety-Related Structures, Systems and Components

Any non-seismic structure postulated to fail under tornado wind loads is located at least a distance of its height above grade from Seismic Category I structures. Per Subsection 3.5.2, Offgas Charcoal Bed Adsorbers are provided with missile protection.

3.5.4 COL Information

None.

3.5.5 References

3.5-1 USNRC, “Safety Evaluation Report of U.S. ABWR,” NUREG-1503, July 1994.

3.5-2 C. V. Moore, “The Design of Barricades for Hazardous Pressure Systems,” Nuclear Engineering and Design, Vol. 5, 1967.

3.5-3 “River Bend Station Updated Safety Analysis Report,” Docket No. 50-458, Volume 6, Pages 3.5-4 and 3.5-5, August 1987.

3.5-4 F. J. Moody, “Prediction of Blowdown Thrust and Jet Forces,” ASME Publication 69-HT-31, August 1969.

3.5-5 R. P. Kennedy, “A Review of Procedures for the Analysis and Design of Concrete Structures to Resist Missile Impact Effects,” Nuclear Engineering and Design, Volume 37, Issue 2, May 1976.

3.5-6 Oak Ridge National Laboratory, W. B. Cottrell and A. W. Savolainen, "U. S. Reactor Containment Technology," ORNL-NSIC-5, Vol. 1, Chapter 6.

3.5-7 Bechtel Power Corporation, "Design of Structures for Missile Impact", Topical Report, BC-TOP-9A, Revision 2, September 1974.

3.5-8 J. R. McDonald, "Rationale for Wind-borne Missile Criteria for DOE facilities", Sept. 1999 (UCRL-CR-135687 S/C B505188).

3.5-9 (Deleted)

Table 3.5-1

Requirement for the Probability of Missile Generation for ESBWR Standard Plant

Criterion	Probability/Yr	Required Licensee Action
(A)	$P_1 < 10^{-4}$	Criterion (A) is the general reliability requirement for loading the turbine and bringing the system on line.
(B)	$10^{-4} < P_1 < 10^{-3}$	If Criterion (B) is reached during operation, the turbine may be kept in service until the next scheduled outage, at which time the applicant, referencing the ESBWR design, is to take action to reduce P_1 to meet Criterion (A) before returning the turbine to service.
(C)	$10^{-3} < P_1 < 10^{-2}$	If Criterion (C) is reached during operation, the turbine is to be isolated within 60 days, at which time the applicant, referencing the ESBWR design, is to take action to reduce P_1 to meet Criterion (A) before returning the turbine to service.
(D)	$10^{-2} < P_1$	If Criterion (D) is reached at any time during the operation, the turbine is to be isolated from the steam supply within 6 days, at which time the applicant, referencing the ESBWR design, is to take action to reduce P_1 to meet Criterion (A) before returning the turbine to service.

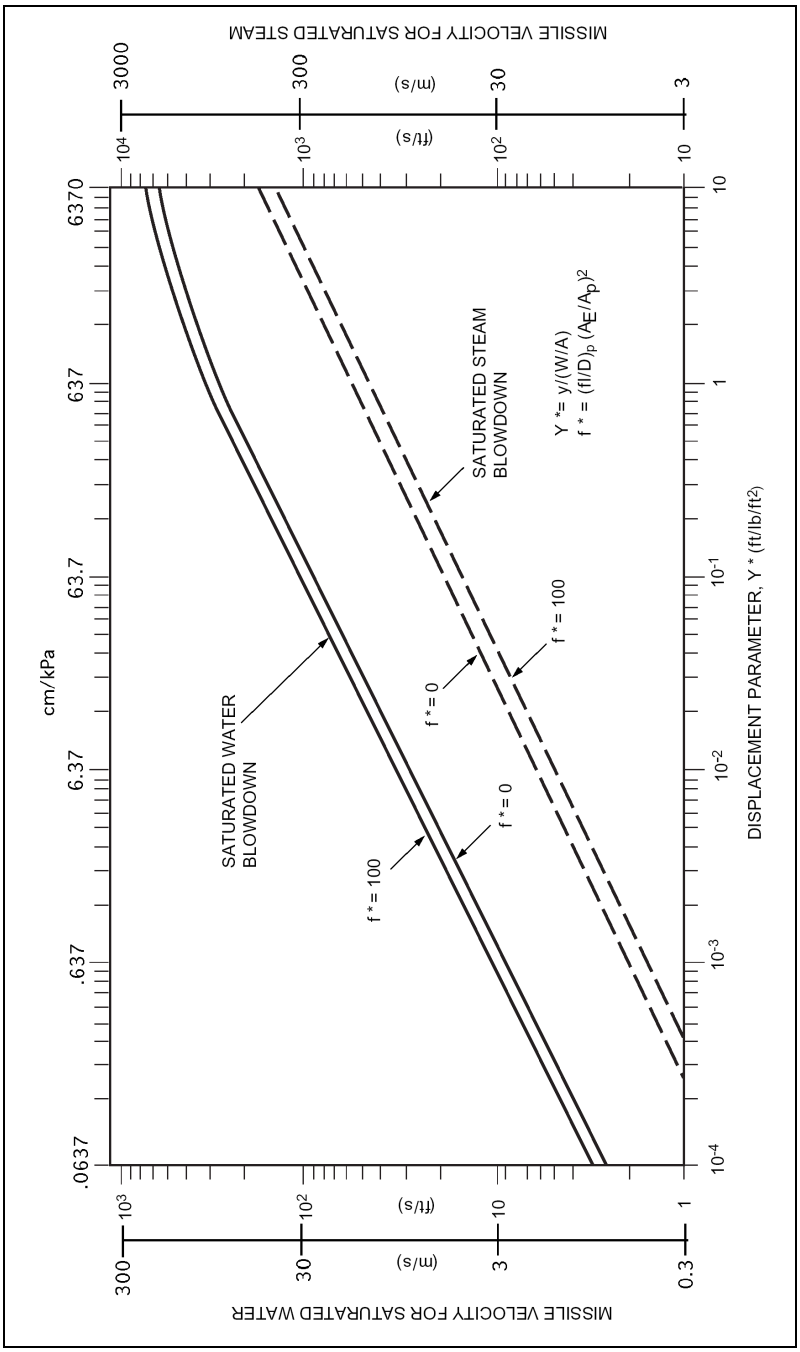

Figure 3.5-1. Missile Velocity and Displacement Characteristics Resulting from Saturated Steam and Water Blowdowns (7.2 MPa (1044 psia) Stagnation Pressure)

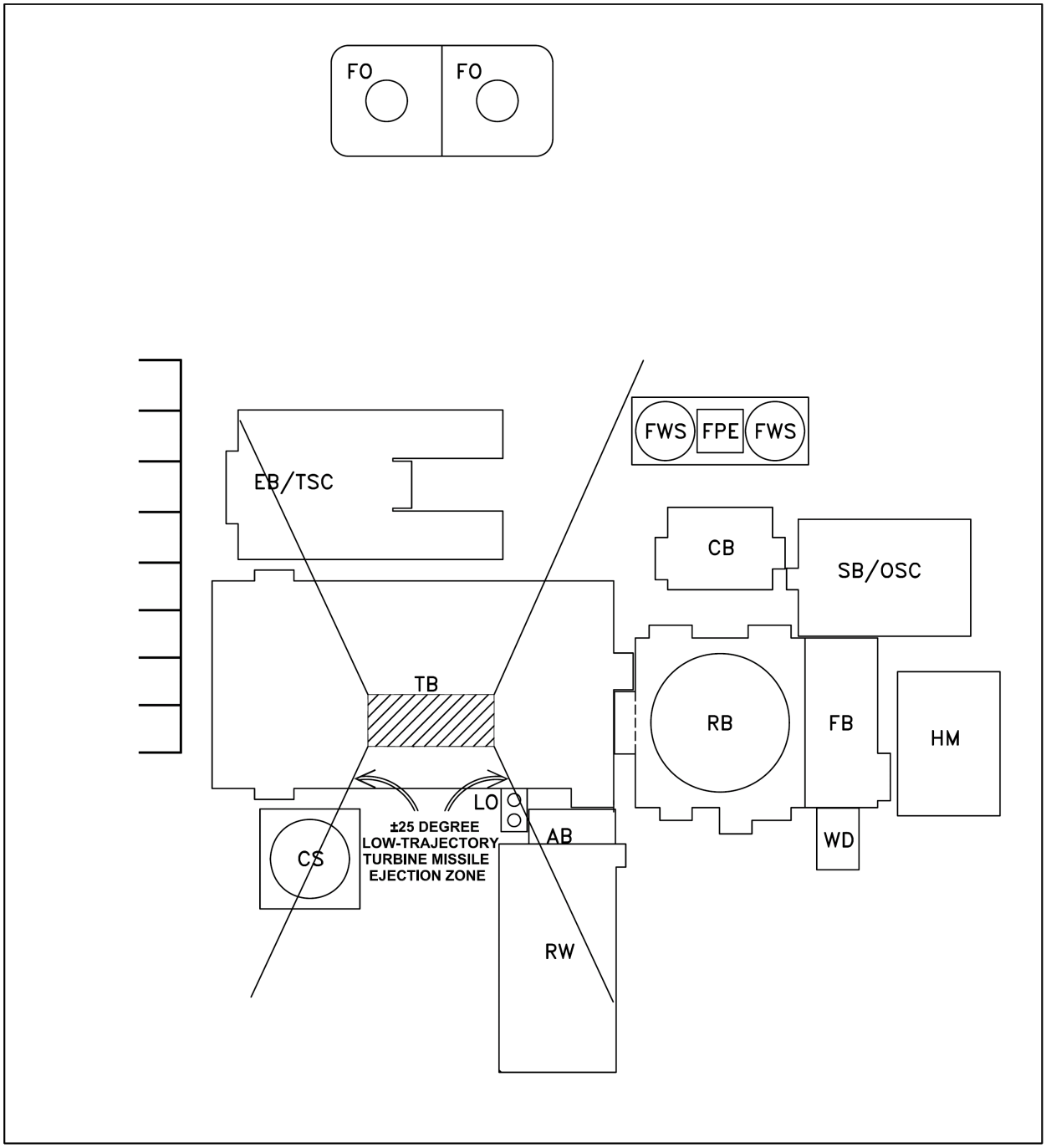

See Figure 1.1-1 for nomenclature.

Figure 3.5-2. ESBWR Standard Plant Low-Trajectory Turbine Missile Strike Zone

3.6 PROTECTION AGAINST DYNAMIC EFFECTS ASSOCIATED WITH THE POSTULATED RUPTURE OF PIPING

This section deals with the structures, systems, components and equipment in the ESBWR Standard Plant.

Subsections 3.6.1 and 3.6.2 describe the design bases and protective measures which ensure that (1) the containment, (2) safety-related systems, components and equipment, and (3) other safety-related structures are adequately protected from the consequences associated with a postulated rupture of high-energy piping or crack of moderate-energy piping both inside and outside the containment.

Before delineating the criteria and assumptions used to evaluate the consequences of piping failures inside and outside of containment, it is necessary to define a pipe break event and a postulated piping failure:

- Pipe Break Event—Any single postulated piping failure occurring during normal plant operation and any subsequent piping failure and/or equipment failure that occurs as a direct consequence of the postulated piping failure.
- Postulated Piping Failure—Longitudinal or circumferential break or rupture postulated in high-energy fluid system piping or through-wall leakage crack postulated in moderate-energy fluid system piping. The terms used in this definition are explained in Subsection 3.6.2.

Structures, systems, components and equipment that are required to shut down the reactor and mitigate the consequences of a postulated piping failure, without offsite power, are defined as safety-related and are designed to Seismic Category I requirements.

The dynamic effects that may result from a postulated rupture of high-energy piping include (1) missile generation, (2) pipe whipping, (3) pipe break reaction forces, (4) jet impingement forces, (5) compartment, subcompartment, and cavity pressurizations, (6) decompression waves within the ruptured pipes, and (7) eight types of loads identified with a Loss-of-Coolant-Accident. (See Subsection 3.8.1.3.5.)

3.6.1 Plant Design for Protection Against Postulated Piping Failures in Fluid Systems Inside and Outside of Containment

In accordance with NUREG-0800, SRP 3.6.1 and SRP 3.6.2, the plant is designed for protection against piping failures inside and outside containment to assure that such failures do not cause the loss of needed functions of safety-related systems and to ensure that the plant can be safely shut down in the event of such failures. The design includes consideration of high energy and moderate energy fluid system piping located inside and outside of containment. Where such a system penetrates containment, consideration starts with the first isolation valve outside of containment.

3.6.1.1 Design Bases

Criteria

Pipe break event protection conforms to 10 CFR 50 Appendix A, General Design Criterion 4, Environmental and Dynamic Effect Design Bases, as it relates to safety-related Structures, Systems, or Components (SSCs) being designed to accommodate the dynamic effects of postulated pipe rupture, including the effects of pipe whipping and discharging fluids. The design bases for this protection are in compliance with NRC Branch Technical Position (BTP) SPLB 3-1 (Formerly BTP ASB 3-1), and BTP 3-4 included in Subsections 3.6.1 and 3.6.2, respectively, of NUREG-0800 (Standard Review Plan). BTP 3-4 describes an acceptable basis for selecting the design locations and orientations of postulated breaks and cracks in fluid systems piping. Standard Review Plan Subsections 3.6.1 and 3.6.2 describe acceptable measures that could be taken for protection against the breaks and cracks and for restraint against pipe whip that may result from breaks.

The design of the containment structure, component arrangement, pipe runs, pipe whip restraints, and compartmentalization are done in consonance with the acknowledgment of protection against dynamic effects associated with a pipe break event. Analytically sized and positioned pipe whip restraints are engineered to preclude damage based on the pipe break evaluation.

Objectives

Protection against pipe break event dynamic effects is provided to fulfill the following objectives:

- Assure that the reactor can be shut down safely and maintained in a safe shutdown condition and that the consequences of the postulated piping failure are mitigated to acceptable limits with Loss of Preferred Power (LOPP).
- Assure that containment integrity is maintained.
- Assure that the radiological doses of a postulated piping failure remain below the limits of 10 CFR 52.47(a)(2)(iv).

Assumptions

The following assumptions are used to determine the protection requirements:

- Pipe break events may occur during normal plant conditions (i.e., reactor startup, operation at power, normal hot standby (Reference 3.6-1) or reactor cooldown to a cold shutdown condition but excluding test modes).
- A pipe break event may occur simultaneously with a seismic event; however, a seismic event does not initiate a pipe break event. This applies to Seismic Category I and non-Seismic Category I piping (seismically analyzed).
- A Single Active Component Failure (SACF) is assumed in systems used to mitigate consequences of the postulated piping failure and to shut down the reactor, except as noted below. A SACF is the malfunction or loss of function of a component of electrical or fluid systems. The failure of an active component of a fluid system is considered to be a loss of component function as a result of mechanical, hydraulic, or electrical malfunction but not the loss of component structural integrity. The direct consequences

of a SACF are considered to be a part of the single active failure. The SACF is assumed to occur in addition to the postulated piping failure and any direct consequences of the piping failure.

- Where the postulated piping failure is assumed to occur in one of two or more redundant trains of a dual-purpose moderate-energy safety-related system (i.e., one required to operate during normal plant conditions as well as to shut down the reactor and mitigate the consequences of the piping failure), single active failure of components in the other train or trains of that system only are not assumed. This applies, provided the system is designed to Seismic Category I standards, is powered from both offsite and onsite sources, and is constructed, operated, and inspected to quality assurance, testing and in-service inspection standards appropriate for safety-related systems.
- If a pipe break event involves a failure of non-Seismic Category I piping, the pipe break event must not result in failure of safety-related systems, components and equipment to shut down the reactor and mitigate the consequences of the pipe break event considering a SACF.
- If LOPP is a direct consequence of the pipe break event (e.g., trip of the turbine-generator producing a power surge that, in turn, trips the main breaker), then a LOPP occurs in a mechanistic time sequence with a SACF. Otherwise, preferred power is assumed available with a SACF.
- A whipping pipe is not capable of rupturing impacted pipes of equal or greater nominal pipe diameter, but may develop through-wall cracks in equal or larger nominal pipe sizes with thinner wall thickness.
- All available systems, including those actuated by operators, are able to mitigate the consequences of a failure. In judging the availability of systems, account is taken of the postulated failure and its direct consequences such as unit trip and LOPP, and of the assumed SACF and its direct consequences. The feasibility of carrying out operator actions is judged on the basis of ample time and adequate access to equipment being available for the proposed actions.
- Although a pipe break event outside the containment may require a cold shutdown, up to eight hours in hot standby is allowed in order for plant personnel to assess the situation and make repairs.
- Pipe whip with rapid motion of pipe resulting from a postulated pipe break occurs in the plane determined by the piping geometry and causes movement in the direction of the jet reaction. If unrestrained, a whipping pipe with a constant energy source forms a plastic hinge and rotates about the nearest rigid restraint, anchor, or wall penetration. If unrestrained, a whipping pipe without a constant energy source (i.e., a break at a closed valve with only one side subject to pressure) is not capable of forming a plastic hinge or rotating about the hinge, provided its movement can be defined and evaluated.
- The fluid internal energy associated with the pipe break reaction can take into account any line restrictions (e.g., flow limiter) between the pressure source and break location and absence of energy reservoirs, as applicable.

- All walls, doors and penetrations which serve as divisional boundaries are designed to withstand the worst case pressurizations associated with the postulated pipe failures inside primary containment. All structural divisional separation walls are designed to maintain their structural integrity after a postulated failure outside containment and within Reactor Building. Divisional separation doors, penetrations and floors are not required to maintain their structural integrity. Justification for divisional separation integrity is addressed in Subsections 3.4.1, 6.2.3 and 9.5.1.

Approach

To comply with the objectives previously described, the safety-related systems, components, and equipment are identified. The safety-related systems, components, and equipment, or portions thereof, are identified in Table 3.6-1 for piping failures postulated inside the containment and in Table 3.6-2 for outside the containment.

3.6.1.2 Description

The lines identified as high and moderate-energy per Subsection 3.6.2.1 are listed in Table 3.6-3 for inside the containment and in Table 3.6-4 for outside the containment. Pressure response analyses are performed for the subcompartments containing high-energy piping. A detailed discussion of the line breaks selected, vent paths, room volumes, analytical methods, pressure results, etc., is provided in Section 6.2.

The effects of pipe whip, jet impingement, spraying, and flooding on the required functions of safety-related systems, components, and equipment, or portions thereof, inside and outside the containment, are considered.

In particular, there are no high-energy lines near the control room. As such, there are no effects upon the habitability of the control room by a piping failure in the control room or elsewhere either from pipe whip, jet impingement, or transport of steam. Further discussion on control room habitability systems is provided in Section 6.4.

3.6.1.3 Design Evaluation

General

An analysis of pipe break events is performed to identify those safety-related systems, components, and equipment that provide protective actions required to mitigate, to acceptable limits, the consequences of the pipe break event.

Pipe break events involving high-energy fluid systems are evaluated for the effects of pipe whip, jet impingement, flooding, room pressurization, and other environmental effects such as temperature. Pipe break events involving moderate-energy fluid systems are evaluated for wetting from spray, flooding, and other environmental effects.

By means of the design features such as separation, barriers, and pipe whip restraints, a discussion of which follows, adequate protection is provided against the effects of pipe break events for safety-related items to an extent that their ability to shut down the plant safely or mitigate the consequences of the postulated pipe failure would not be impaired.

General Protection Methods

The direct effects associated with a particular postulated break or crack are mechanistically consistent with the failure. Thus, actual pipe dimensions, piping layouts, material properties, and equipment arrangements are considered in defining the following specific measure for protection against actual pipe movement and other associated consequences of postulated failures:

- Protection against the dynamic effects of pipe failures is provided in the form of pipe whip restraints, equipment shields, and physical separation of piping, equipment, and instrumentation.
- The precise method chosen depends largely upon limitations placed on the designer such as accessibility, maintenance, and proximity to other pipes.

Protection Methods by Separation

The plant arrangement provides physical separation to the extent practicable to maintain the independence of redundant safety-related systems (including their auxiliaries) in order to prevent the loss of safety function caused by any single postulated event. Redundant trains (e.g., A and B trains) and divisions are located in separate compartments to the extent possible. Physical separation between redundant safety-related systems with their related auxiliary supporting features, therefore, is the basic protective measure incorporated in the design to protect against the dynamic effects of postulated pipe failures.

Because of the complexities of several divisions being adjacent to high-energy lines in the drywell, specific break locations are determined in accordance with Subsection 3.6.2.1 for possible spatial separation. Care is taken to avoid concentrating safety-related equipment in the break exclusion zone allowed according to Subsection 3.6.2.1. If spatial separation requirements (distance and/or arrangement to prevent damage) cannot be met based on the postulation of specific breaks, then barriers, enclosures, shields, or restraints are provided. These methods of protection are discussed below.

For other areas where physical separation is not practical, the following High Energy Line Separation Analysis (HELSA) evaluation is done to determine which high-energy lines meet the spatial separation requirement and which lines require further protection:

- For the HELSA evaluation, no particular break points are identified. Cubicles or areas through which the high-energy lines pass are examined in total. Breaks are postulated at any point in the piping system.
- Safety-related systems, components, and equipment at a distance greater than 9.1 m (30 ft) from any high energy piping are considered as meeting spatial separation requirements. No damage is assumed to occur on account of jet impingement, because the impingement force becomes negligible beyond 9.1 m (30 ft). Likewise, a 9.1 m (30 ft) evaluation zone is established for pipe breaks to assure protection against potential damage from a whipping pipe. Assurance that 9.1 m (30 ft) represents the maximum free length is made in the piping layout.

  Exception to the 9.1 m (30 ft) rule is the main steam line break (750 mm [30 inch] diameter pipe) for which 19.1 m (63 ft approx) is used as the evaluation zone for the jet interaction and structural integrity determination to any SSCs.

- Safety-related systems, components, and equipment at a distance less than 9.1 m (30 ft) from any high-energy piping are evaluated to see if damage could occur to more than one safety-related division, preventing safe shutdown of the plant. If damage occurred to only one division of a redundant system, the requirement for redundant separation is met. Other redundant divisions are available for safe shutdown of the plant and no further evaluation is performed.

  Exception to the 9.1 m (30 ft) rule is the main steam line break (750 mm [30 inch] diameter pipe), for which the distance of 19.1 m (63 ft approx) is used as requirement for the above evaluation.

- If damage could occur to more than one division of a redundant safety-related system within 9.1 m (30 ft) of any high energy piping, other protection in the form of barriers, shields, or enclosures is used. Exception to the 9.1 m (30 ft) rule is the main steam line break (750 mm [30 inch] diameter pipe), for which the distance of 19.1 m (63 ft approx) is used as the requirement for the evaluation. Pipe whip restraints are used if protection from whipping pipe is not possible by barriers and shields. These methods of protection are discussed below.

Barriers, Shields, and Enclosures

Protection requirements are met through the protection afforded by the walls, floors, columns, abutments, and foundations in many cases. Where adequate protection is not already present because of spatial separation or existing plant features, additional barriers, deflectors, or shields are identified as necessary to meet the functional protection requirements.

Barriers or shields that are identified as necessary by the use of specific break locations in the drywell are designed for the specific loads associated with the particular break location.

The Main Steam Isolation Valves (MSIV) and the feedwater isolation and check valves located inside the main steam tunnel are designed for the effects of a line break. The details of how the MSIV and feedwater isolation and check valves functional capabilities are protected against the effects of these postulated pipe failures are provided as part of the pipe break evaluation report.

Barriers or shields that are identified as necessary by the HELSA evaluation (i.e., based on no specific break locations) are designed for worst-case loads. The closest high-energy pipe location and resultant loads are used to size the barriers.

Pipe Whip Restraints

Pipe whip restraints are used where pipe break protection requirements could not be satisfied using spatial separation, barriers, shields, or enclosures alone. Restraints are located based on the specific break locations determined in accordance with Subsection 3.6.2.1. After the restraints are placed, the piping and safety-related systems are evaluated for jet impingement and pipe whip. For those cases where jet impingement damage could still occur, barriers, shields, or enclosures are utilized.

The design criteria for restraints are given in Subsection 3.6.2.3.

Specific Protection Measures

- Nonsafety-related systems and system components are not required for the safe shutdown of the reactor, nor are they required for the limitation of the offsite release in the event of

a pipe rupture. However, while none of this equipment is needed during or following a pipe break event, pipe whip protection is considered where a resulting failure of a nonsafety-related system or component could initiate or escalate the pipe break event in a safety-related system or component, or in another nonsafety-related system whose failure could affect a safety-related system.

- For high energy piping systems penetrating through the containment, isolation valves are located as close to the containment as possible.
- The pressure, water level, and flow sensor instrumentation for those safety-related systems required to function following a pipe rupture are protected.
- High-energy fluid system pipe whip restraints and protective measures are designed so that a postulated break in one pipe could not, in turn, lead to a rupture of other nearby pipes or components, if the secondary rupture could result in consequences that would be considered unacceptable for the initial postulated break.
- For any postulated pipe rupture, the structural integrity of the containment is maintained. In addition, for those postulated ruptures classified as a loss of reactor coolant, the design leaktightness of the containment fission product barrier is maintained.
- Safety relief valves (SRVs) are located and restrained so that a pipe failure would not prevent depressurization.
- Protection for the FMCRD scram insert lines is not required, because the motor operation of the FMCRD can adequately insert the control rods even with a complete loss of insert lines (Subsection 3.6.2.1.3).
- The escape of steam, water, combustible or corrosive fluids, gases, and heat in the event of a pipe rupture do not preclude:
  - accessibility to any areas required to cope with the postulated pipe rupture;
  - habitability of the control room; or
  - the ability of safety-related instrumentation, electric power supplies, components, and controls to perform their safety-related function.

3.6.2 Determination of Break Locations and Dynamic Effects Associated with the Postulated Rupture of Piping

Information concerning break and crack location criteria and methods of analysis for dynamic effects are discussed in this Subsection in accordance with NUREG-0800, SRP 3.6.2. This includes location criteria and methods of analysis needed to evaluate the dynamic effects associated with postulated breaks and cracks in high and moderate-energy fluid system piping inside and outside of the primary containment. This information provides the basis for the requirements for the protection of safety-related structures, systems, and components defined in the introduction of Section 3.6, which includes meeting the requirements of GDC 4 as it relates to safety-related SSCs being designed to accommodate the dynamic effects of postulated pipe rupture, including postulation of pipe rupture locations; break and crack characteristics; dynamic analysis of pipe-whip; and jet impingement loads.

The plant meets the relevant requirements of GDC 4 as follows:

(1) Criteria defining postulated pipe rupture locations and configurations inside containment are in accordance with BTP 3-4. For the piping system with reactor water, if the environmental fatigue is included in accordance with Regulatory Guide (RG) 1.207, the fatigue usage limit should be ≤ 0.40 as the criterion instead of ≤ 0.10 for determining pipe break locations.

(2) Protection against postulated pipe ruptures outside containment is provided in accordance with BTP 3-4.

(3) Detailed acceptance criteria covering pipe-whip dynamic analysis, including determination of the forcing functions of jet thrust and jet impingement are in accordance with Section III of SRP 3.6.2. The general bases and assumptions of the analysis are in accordance with BTP 3-4.

3.6.2.1 Criteria Used to Define Break and Crack Location and Configuration

The following subsections establish the criteria for the location and configuration of postulated breaks and cracks.

Definition of High-Energy Fluid Systems

High-energy fluid systems are defined to be those systems or portions of systems that, during normal plant conditions (as defined in Subsection 3.6.1.1), are either in operation or are maintained pressurized under conditions where either or both of the following are met:

- maximum operating temperature exceeds 93.3°C (200°F); or
- maximum operating pressure exceeds 1.9 MPaG (275 psig).

Definition of Moderate-Energy Fluid Systems

Moderate-energy fluid systems are defined to be those systems or portions of systems that, during normal plant conditions (as defined in Subsection 3.6.1.1), are either in operation or are maintained pressurized (above atmospheric pressure) under conditions where both of the following are met:

- maximum operating temperature is 93.3°C (200°F) or less; and
- maximum operating pressure is 1.9 MPaG (275 psig) or less.

Piping systems are classified as moderate-energy systems when they operate as high-energy piping for only short operational periods in performing their system function but, for the major operational period, qualify as moderate-energy fluid systems. An operational period is considered short if the total fraction of time that the system operates within the pressure-temperature conditions specified for high-energy fluid systems is less than 2% of the total time that the system operates as a moderate-energy fluid system.

Postulated Pipe Breaks and Cracks

A postulated pipe break is defined as a sudden gross failure of the pressure boundary either in the form of a complete circumferential severance (guillotine break) or a sudden longitudinal split without pipe severance, and is postulated for high-energy fluid systems only. For moderate-

energy fluid systems, pipe failures are limited to postulation of cracks in piping and branch runs; these cracks affect the surrounding environmental conditions only and do not result in whipping of the cracked pipe. High-energy fluid systems are also postulated to have cracks for conservative environmental conditions in a confined area where high and moderate-energy fluid systems are located.

The following high-energy piping systems (or portions of systems) are considered as potential candidates for a postulated pipe break during normal plant conditions and are analyzed for potential damage resulting from dynamic effects:

- all piping which is part of the reactor coolant pressure boundary (RCPB) and subject to reactor pressure continuously during station operation;
- all piping which is beyond the second isolation valve but subject to reactor pressure continuously during station operation; and
- all other piping systems or portions of piping systems considered high-energy systems.

Portions of piping systems that are isolated from the source of the high-energy fluid during normal plant conditions are exempted from consideration of postulated pipe breaks. This includes portions of piping systems beyond normally closed valves. Pump and valve bodies are also exempted from consideration of pipe break because of their greater wall thickness.

3.6.2.1.1 [*Locations of Postulated Pipe Breaks*

Postulated pipe break locations are selected as follows:

Piping Meeting Separation Requirements

Based on the HELSA evaluation described in Subsection 3.6.1.3, the high-energy lines which meet the spatial separation requirements are generally not identified with particular break points. Breaks are postulated at all possible points in such high-energy piping systems. However, in some systems break points are particularly specified according to the following subsections if special protection devices such as barriers or restraints are provided.

Piping in Containment Penetration Areas

No pipe breaks or cracks are postulated in those portions of piping from the containment wall penetration to and including the inboard or outboard isolation valves which meet the following requirements in addition to the requirement of the ASME Code, Section III, Subarticle NE-1120:

- *The following design stress and fatigue limits are not exceeded:*

  For ASME Code, Section III, Class 1 Piping

  - *The maximum stress range between any two load sets (including the zero load set) does not exceed 2.4 S_m, and is calculated by Equation 10 in NB-3653, ASME Code, Section III. If the calculated maximum stress range of Equation 10 exceeds 2.4 S_m, the stress ranges calculated by both Equation 12 and Equation 13 in paragraph NB-3653 meet the limit of 2.4 S_m.*
  - *The cumulative usage factor is less than 0.1.*

For the piping system with reactor water, if the environmental fatigue is included in accordance with RG 1.207, the fatigue usage limit should be ≤ 0.40 as the criterion instead of ≤ 0.10 for determining pipe break locations.

- *The maximum stress as calculated by Equation 9 in NB-3652 under the loadings resulting from a postulated piping failure beyond those portions of piping, does not exceed the lesser of 2.25 S_m and 1.8 S_y except that, following a failure outside containment, the pipe between the outboard isolation valve and the first restraint may be permitted higher stress, provided a plastic hinge is not formed and operability of the valves with such stresses is assured in accordance with the requirements identified in Subsection 3.9.3. Primary loads include those that are deflection limited by whip restraints.*

For ASME Code, Section III, Class 2 Piping

- *The maximum stress as calculated by the sum of Equations 9 and 10 in Paragraph NC-3653, ASME Code, Section III, considering those loads and conditions thereof for which level A and level B stress limits are specified in the system's Design Specification (i.e., sustained loads, occasional loads, and thermal expansion), excluding an earthquake event, does not exceed 0.8(1.8 S_h + S_A). The S_h and S_A are allowable stresses at maximum (hot) temperature and allowable stress range for thermal expansion, respectively, as defined in Article NC-3600 of the ASME Code, Section III.*
- *The maximum stress, as calculated by Equation 9 in NC-3653 under the loadings resulting from a postulated piping failure of fluid system piping beyond these portions of piping, does not exceed the lesser of 2.25 S_h and 1.8 S_y.*

Primary loads include those that are deflection limited by whip restraints. The exceptions permitted above may also be applied provided that, when the piping between the outboard isolation valve and the restraint is constructed in accordance with the Power Piping Code ASME Code B31.1, the piping is either of seamless construction with full radiography of all circumferential welds, or all longitudinal and circumferential welds are fully radiographed.

- *Welded attachments, for pipe supports or other purposes, to these portions of piping are avoided except where detailed stress analyses, or tests, are performed to demonstrate compliance with the above mentioned code limits.*
- *The number of circumferential and longitudinal piping welds and branch connections are minimized. Where penetration sleeves are used, the enclosed portion of fluid system piping is seamless construction and without circumferential welds unless specific access provisions are made to permit in-service volumetric examination of longitudinal and circumferential welds.*
- *The length of these portions of piping are reduced to the minimum length practical.*
- *The design of pipe anchors or restraints (e.g., connections to containment penetrations and pipe whip restraints) do not require welding directly to the outer surface of the piping (e.g., flued integrally forged pipe fittings may be used) except where such welds are 100% volumetrically examinable in service and a detailed stress analysis is performed to demonstrate compliance with the above mentioned code limits.*

- *Sleeves provided for those portions of piping in the containment penetration areas are constructed in accordance with the rules of Class MC, Subsection NE of the ASME Code, Section III, where the sleeve is part of the containment boundary. In addition, the entire sleeve assembly is designed to meet the following requirements and tests:*
  - *The design pressure and temperature are not less than the maximum operating pressure and temperature of the enclosed pipe under normal plant conditions.*
  - *The Level C stress limits in NE-3220, ASME Code, Section III, are not exceeded under the loadings associated with containment design pressure and temperature in combination with the safe shutdown earthquake (SSE).*
  - *The assemblies are subjected to a single pressure test at a pressure not less than its design pressure.*
  - *The assemblies do not prevent the access required to conduct the in-service examination specified below.*
- *A 100% volumetric in-service examination of all pipe welds is conducted during each inspection interval as defined in IWA-2400, ASME Code, Section XI.*

ASME Code Section III Class 1 Piping in Areas Other Than Containment Penetration

With the exception of those portions of piping identified above, breaks in ASME Code, Section III, Class 1 piping are postulated at the following locations in each piping and branch run:

- *At terminal ends including the locations shown in Figure 3.6-3.*
- *At intermediate locations where the maximum stress range as calculated by Equation 10 in NB-3653, ASME Code, Section III exceeds 2.4 S_m, and either Equation 12 or Equation 13 in Paragraph NB-3653 exceeds 2.4 S_m.*
- *At intermediate locations where the cumulative usage factor exceeds 0.1. As a result of piping reanalysis caused by differences between the design configuration and the as-built configuration, the highest stress or cumulative usage factor locations may be shifted; however, the initially determined intermediate break locations need not be changed unless one of the following conditions exists:*
  - *The dynamic effects from the new (as-built) intermediate break locations are not mitigated by the original pipe whip restraints and jet shields.*
  - *A change is required in pipe parameters, such as major differences in pipe size, wall thickness, and routing.*

  For the piping system with reactor water, if the environmental fatigue is included in accordance with RG 1.207, the fatigue usage limit should be ≤ 0.40 as the criteria instead of ≤ 0.10 for determining pipe break locations.

ASME Code Section III Class 2 and 3 Piping in Areas Other Than Containment Penetration

With the exceptions of those portions of piping identified above, breaks in ASME Code, Section III, Class 2 and 3 piping are postulated at the following locations in those portions of each piping and branch run:

- *At terminal ends.*
- *At intermediate locations selected by one of the following criteria:*
  - *At each pipe fitting (e.g., elbow, tee, cross, flange, and nonstandard fitting), welded attachment, and valve.*
  - *At one location at each extreme of the piping run adjacent to the protective structure for piping that contains no fittings, welded attachments, or valves.*
  - *At each location where stresses calculated by the sum of Equations 9 and 10 in NC/ND-3653, ASME Code, Section III, exceed 0.8 times the sum of the stress limits given in NC/ND-3653.*

Piping will be designed to minimize the stresses and fatigue usage factors such that intermediate pipe break locations are avoided.

As a result of piping reanalysis caused by differences between the design configuration and the as-built configuration, the highest stress locations may be shifted; however, the initially determined intermediate break locations may be used unless a redesign of the piping resulting in a change in the pipe parameters (diameter, wall thickness, routing) is required, or the dynamic effects from the new (as-built) intermediate break location are not mitigated by the original pipe whip restraints and jet shields.

For complex piping systems such as those containing arrangements of headers and parallel piping running between headers, the pipe breaks are postulated pursuant to the applicable criteria identified in this subsection and in conformance with BTP 3-4.]*

The terminal end pipe break locations for high energy lines inside and outside containment are provided in Tables 3.6-5 and 3.6-6. The high energy line breaks at the containment penetration outside of the containment penetration zone are provided in Table 3.6-7. Terminal end break locations in piping systems on both sides of the containment penetration are shown in Figure 3.6-3.

[*Non-ASME Class Piping*

Breaks in seismically analyzed non-ASME Class (not ASME Class 1, 2, or 3) piping are postulated according to the same requirements for ASME Class 2 and 3 piping above. Separation and interaction requirements between seismically analyzed and non-seismically analyzed piping are met as described in Subsection 3.7.3.8.

Separating Structure With High-Energy Lines

If a structure separates a high-energy line from a safety-related component, the separating structure is designed to withstand the consequences of the pipe break in the high-energy line at locations that the aforementioned criteria require to be postulated. However, as noted in Subsection 3.6.1.3, some structures which are identified as necessary by the HELSA evaluation (i.e., based on no specific break locations) are designed for worst-case loads.]*

* Text sections that are bracketed and italicized with an asterisk following the brackets are designated as Tier 2*. Prior NRC approval is required to change.

3.6.2.1.2 [*Locations of Postulated Pipe Cracks*

Postulated pipe crack locations are selected as follows:

Piping Meeting Separation Requirements

Based on the HELSA evaluation described in Subsection 3.6.1.3, the high- or moderate-energy lines, which meet the separation requirements, are not identified with particular crack locations. Cracks are postulated at all possible points that are necessary to demonstrate adequacy of separation or other means of protections provided for safety-related SSCs.

High-Energy Piping

With the exception of those portions of piping identified above, leakage cracks are postulated for the most severe environmental effects as follows:

- *For ASME B&PV Code, Section III Class 1 piping, at axial locations where the calculated stress range by Equation 10 and either Equation 12 or Equation 13 in NB-3653 exceeds 1.2 S_m.*
- *For ASME B&PV Code, Section III Class 2 and 3 or non-ASME class piping, at axial locations where the calculated stress by the sum of Equations 9 and 10 in NC/ND-3653 exceeds 0.4 times the sum of the stress limits given in NC/ND-3653.*
- *Non-ASME class piping, which has not been evaluated to obtain stress information, has leakage cracks postulated at axial locations that produce the most severe environmental effects.*

Moderate-Energy Piping in Containment Penetration Areas

Leakage cracks are not postulated in those portions of piping from the containment wall to and including the inboard or outboard isolation valves, provided (1) they meet the requirements of the ASME B&PV Code, Section III, NE-1120, and (2) the stresses calculated by the sum of Equations 9 and 10 in ASME B&PV Code, Section III, NC-3653 do not exceed 0.4 times the sum of the stress limits given in NC-3653.

Moderate-Energy Piping in Areas Other Than Containment Penetration

- *Leakage cracks are postulated in piping located adjacent to safety-related SSCs, except:*
  - *Where exempted above.*
  - *For ASME B&PV Code, Section III, Class 1 piping the stress range calculated by Equation 10 and either Equation 12 or Equation 13 in NB-3653 is less than 1.2 S_m.*
  - *For ASME B&PV Code, Section III, Class 2 or 3 and non-ASME class piping, the stresses calculated by the sum of Equations 9 and 10 in NC/ND-3653 are less than 0.4 times the sum of the stress limits given in NC/ND-3653.*
- *Leakage cracks, unless the piping system is exempted above, are postulated at axial and circumferential locations that result in the most severe environmental consequences.*
- *Leakage cracks are postulated in fluid system piping designed to non-seismic standards as necessary to meet the environmental protection requirements of Subsection 3.6.1.1.*

Moderate-Energy Piping in Proximity to High-Energy Piping

Moderate-energy fluid system piping or portions thereof which are located within a compartment of confined area involving considerations for a postulated break in high-energy fluid system piping, are acceptable, without postulation of through-wall leakage cracks, except where a postulated leakage crack in the moderate-energy fluid system piping results in more severe environmental conditions than the break in the proximate high-energy fluid system piping, in which case the provisions of this subsection are applied.]*

* Text sections that are bracketed and italicized with an asterisk following the brackets are designated as Tier 2*. Prior NRC approval is required to change.

3.6.2.1.3 Types of Breaks and Cracks to be Postulated

Pipe Breaks

The following types of breaks are postulated in high-energy fluid system piping at the locations identified by the criteria specified in Subsection 3.6.2.1.1.

- No breaks are postulated in piping having a nominal diameter less than or equal to 25 mm (1 inch). Instrument lines 25 mm (1 in) and less nominal pipe or tubing size meet the provision of RG 1.11. Additionally, the 32 mm (1.25 in) nominal diameter hydraulic control units (HCU) fast scram lines do not require special protection measures because of the following reasons:
  - The piping to the control rod drives (CRDs) from the HCUs are located in the containment under reactor vessel, and in the Reactor Building away from other safety-related equipment; therefore, should a line fail, it would not affect any safety-related equipment but only impact other HCU lines. As discussed in Subsection 3.6.1.1, a whipping pipe can only rupture an impacted pipe of smaller nominal pipe size or cause a through-wall crack in the same nominal pipe size but with thinner wall thickness.
  - The total amount of energy contained in the 32 mm (1.25 in) nominal diameter piping between the normally closed scram insert valve on the HCU module and the ball-check valve in the control rod housing is smaller than 6 kJ per meter (1348.85 ft. lbf per foot) of the 32 mm (1.25 in) line. In the event of a rupture of this line, the ball-check valve would close to prevent reactor vessel flow out of the break.
  - Even if a number of the HCU lines ruptured, the control rod insertion function would not be impaired, because the electrical motor of the fine motion control drive would drive in the control rods.
- Longitudinal breaks are postulated only in piping having a nominal diameter equal to or greater than 100 mm (4 in).
- Circumferential breaks are only assumed at all terminal ends.
- At each of the intermediate postulated break locations identified to exceed the stress and usage factor limits of the criteria in Subsection 3.6.2.1.1, consideration is given to the occurrence of either a longitudinal or circumferential break. Examination of the state of stress in the vicinity of the postulated break location is used to identify the most probable

type of break. If the maximum stress range in the longitudinal direction is greater than 1.5 times the maximum stress range in the circumferential direction, only the circumferential break is postulated. Conversely, if the maximum stress range in the circumferential direction is greater than 1.5 times the stress range in the longitudinal direction, only the longitudinal break is postulated. If no significant difference between the circumferential and longitudinal stresses is determined, then both types of breaks are considered.

- Where breaks are postulated to occur at each intermediate pipe fitting, weld attachment, or valve without the benefit of stress calculations, only circumferential breaks are postulated.
- For both longitudinal and circumferential breaks, after assessing the contribution of upstream piping flexibility, pipe whip is assumed to occur in the plane defined by the piping geometry and configuration for circumferential breaks and out of plane for longitudinal breaks and to cause piping movement in the direction of the jet reactions. Structural members, piping restraints, or piping stiffness as demonstrated by inelastic limit analysis are considered in determining the piping movement limit (alternatively, circumferential breaks are assumed to result in pipe severance and separation amounting to at least a one-diameter lateral displacement of the ruptured piping sections).
- For a circumferential break, the dynamic force of the jet discharged at the break location is based upon the effective cross-sectional flow area of the pipe and on a calculated fluid pressure as modified by an analytically or experimentally determined thrust coefficient. Limited pipe displacement at the break location, line restrictions, flow limiters, positive pump-controlled flow, and the absence of energy reservoirs are used, as applicable, in the reduction of the jet discharge.
- Longitudinal breaks in the form of axial split without pipe severance are postulated in the center of the piping at two diametrically opposed points (but not concurrently) located so that the reaction force is perpendicular to the plane of the piping configuration and produces out-of-plane bending. Alternatively, a single split is assumed at the section of highest tensile stress as determined by detailed stress analysis (e.g., finite element analysis).
- For longitudinal breaks, the dynamic force of the fluid jet discharge is based on a circular or elliptical (2D x 1/2D) break area equal to the effective cross-sectional flow area of the pipe at the break location and on a calculated fluid pressure modified by an analytically or experimentally determined thrust coefficient as determined for a circumferential break at the same location. Line restrictions, flow limiters, positive pump-controlled flow, and the absence of energy reservoirs may be taken into account as applicable in the reduction of jet discharge.

Pipe Cracks

The following criteria are used to postulate through-wall leakage cracks in high- or moderate-energy fluid systems or portions of systems:

- Cracks are postulated in moderate-energy fluid system piping and branch runs exceeding a nominal pipe size of 25 mm (1 in).

- At axial locations determined per Subsection 3.6.2.1.2, the postulated cracks are oriented circumferentially to result in the most severe environmental consequences.
- Crack openings are assumed as a circular orifice of area equal to that of a rectangle having dimensions one-half-pipe-diameter in length and one-half-pipe-wall thickness in width.
- The flow from the crack opening is assumed to result in an environment that wets all unprotected components within the compartment, with consequent flooding in the compartment and communicating compartments, based on a conservatively estimated time period to effect corrective actions.

3.6.2.2 Analytic Methods to Define Blowdown Forcing Functions and Response Models

Analytic Methods to Define Blowdown Forcing Functions

The rupture of a pressurized pipe causes the flow characteristics of the system to change, creating reaction forces that can dynamically excite the piping system. The reaction forces are a function of time and space and depend upon fluid state within the pipe prior to rupture, break flow area, frictional losses, plant system characteristics, piping system, and other factors. The methods used to calculate the reaction forces for various piping systems are presented as follows:

The criteria that are used for calculation of fluid blowdown forcing functions include:

- Circumferential breaks are assumed to result in pipe severance and separation amounting to at least a one-diameter lateral displacement of the ruptured piping sections unless physically limited by piping restraints, structural members, or piping stiffness as may be demonstrated by inelastic limit analysis (e.g., a plastic hinge in the piping is not developed under loading).
- The dynamic force of the jet discharge at the break location is based on the cross-sectional flow area of the pipe and on a calculated fluid pressure as modified by an analytically or experimentally-determined thrust coefficient. Line restrictions, flow limiters, positive pump-controlled flow, and the absence of energy reservoirs are taken into account, as applicable, in the reduction of jet discharge.
- All breaks are assumed to attain full size within one millisecond after break initiation.

Blowdown forcing functions are determined by the method specified in Appendix B of ANSI/ANS-58.2 (Reference 3.6-4).

Pipe Whip Dynamic Response Analyses

The prediction of time-dependent and steady thrust reaction loads caused by blowdown of subcooled, saturated, and two-phase fluid from ruptured pipe is used in design and evaluation of dynamic effects of pipe breaks. A discussion of the analytical methods employed to compute these blowdown loads is given above. Following is a discussion of analytical methods used to account for this loading.

The criteria used for performing the pipe whip dynamic response analyses include the following:

- A pipe whip analysis is performed for each postulated pipe break. However, a given analysis can be used for more than one postulated break location if the blowdown forcing

function, piping and restraint system geometry, and piping and restraint system properties are conservative for other break locations.

- The analysis includes the dynamic response of the pipe in question and the pipe whip restraints, which transmit loading to the support structures.
- The analytical model adequately represents the mass/inertia and stiffness properties of the system.
- Pipe whipping is assumed to occur in the plane defined by the piping geometry and configuration and to cause pipe movement in the direction of the jet reaction.
- Piping within the broken loop is no longer considered part of the RCPB. Plastic deformation in the pipe is considered as a potential energy absorber. Limits of strain are imposed which are similar to strain levels allowed in restraint plastic members. Piping systems are designed so that plastic instability does not occur in the pipe at the design dynamic and static loads unless damage studies are performed which show the consequences do not result in direct damage to any safety-related system or component.
- Components, such as vessel safe ends and valves which are attached to the broken piping system and do not serve a safety-related function and components whose failure would not further escalate the consequences of the accident are not designed to meet ASME Code-imposed limits for safety-related components under faulted loading. However, if these components are required for safe shutdown or serve to protect the structural integrity of a safety-related component, limits to meet the Code requirements for faulted conditions and limits to ensure required operability would be met.

Analyses for pipe whip restraint selection using the pipe dynamic analysis computer program and a pipe break modeling program (ANSYS) are performed as described in Appendix 3D, which predicts the response of a pipe subjected to the thrust force occurring after a pipe break. The program treats the situation in terms of generic pipe break configuration which involves a straight, uniform pipe fixed at one end and subjected to a time-dependent thrust force at the other end. A typical restraint used to reduce the resulting deformation is also included at a location between the two ends. Nonlinear and time-independent stress strain relationships are used to model the pipe and the restraint. Using a plastic-hinge concept, bending of the pipe is assumed to occur only at the fixed end and at the location supported by the restraint.

Effects of pipe shear deflection are considered negligible. The pipe-bending moment-deflection (or rotation) relation used for these locations is obtained from a static nonlinear cantilever-beam analysis. Using the moment-rotation relation, nonlinear equations of motion of the pipe are formulated using energy considerations and the equations are numerically integrated in small time steps to yield time-history of the pipe motion.

The piping stresses in the containment penetration areas are calculated by the ANSYS computer program, a program as described in Appendix 3D. The program is used to perform the non-linear analysis of a piping system for time varying displacements and forces due to postulated pipe breaks.

3.6.2.3 Dynamic Analysis Methods to Verify Integrity and Operability

3.6.2.3.1 Jet Impingement Analyses and Effects on Safety-Related Components

The criteria used for evaluating the effects of fluid jets on safety-related SSCs are as follows:

- Safety-related SSCs are not impaired so as to preclude safety-related functions. For any given postulated pipe break and consequent jet, those safety-related SSCs needed to safely shut down the plant are identified.
- Safety-related SSCs which are not necessary to safely shut down the plant for a given break are not protected from the consequences of the fluid jet.
- Safe shutdown of the plant caused by postulated pipe ruptures within the RCPB is not aggravated by sequential failures of safety-related piping and the required emergency cooling system performance is maintained.
- Offsite doses comply with 10 CFR 52.47(a)(2)(iv).
- Postulated breaks resulting in jet impingement loads are assumed to occur in high-energy lines at 102% power operation of the plant.
- Through-wall leakage cracks are postulated in moderate-energy lines and are assumed to result in wetting and spraying of safety-related SSCs.
- Reflected jets are considered only when there is an obvious reflecting surface (such as a flat plate) which directs the jet onto safety-related equipment. Only the first reflection is considered in evaluating potential targets.
- Potential targets, or portions of targets adjacent to the jet boundary, are assumed to be impinged upon when reasonable variations in jet geometry or pipe movement are considered.

The analytical methods used to determine which targets could be impinged upon by a fluid jet and the corresponding jet impingement load include:

- The direction of the fluid jet is based on the arrested position of the pipe during steady-state blowdown.
- The impinging jet proceeds along a straight path.
- The total impingement force acting on any cross-sectional area of the jet is time and distance invariant with a total magnitude equivalent to the steady-state fluid blowdown force given in Subsection 3.6.2.2 and with jet characteristics shown in Figure 3.6-1.
- The jet impingement thrust force on the target is calculated for certain cases according to ANSI/ANS 58.2 (Reference 3.6-4).
- For cases where the magnitude of a jet thrust force is only important for pipe reaction load, a detailed jet evaluation is not necessary. Simple load calculation may be applicable for a pipe break where the absence of an energy reservoir upstream or downstream of the break does not result in a continuous jet blowdown. A detailed jet impingement analysis is not significant for smaller pipe breaks if the design or analysis of larger size pipe break loads envelops these pipe break jet impingement loads affecting the

same target. The jet shield, barrier and an enclosure designed for a large pipe break will bound smaller pipe jet impingement and pipe whip effects, and loads calculated based on simplified method may be sufficient to justify these cases.

- On a case by case basis a quantitative analysis approach to determine the dynamic jet force is necessary where jet characteristics such as, jet nonlinearity, turbulence, feedback amplification, and jet reflection are deemed significant in the jet modeling. For this purpose, other dynamic analysis method is appropriate such as computational fluid dynamic analysis. This method of analysis is capable of defining parameters associated with the jet flow properties, ambient condition, and surface profile of the interacting targets. The resulting force time history and jet pressures on target surface are obtained from such computational fluid dynamics analysis. The detailed jet analysis evaluation method is described later as analysis Steps 1, 2, and 3 in this subsection.
- The break opening is assumed to be a circular orifice of cross-sectional flow area equal to the effective flow area of the break.
- The jet impingement force is equal to the steady-state value of the fluid blowdown force calculated by the methods described in Subsection 3.6.2.2.
- The distance of jet travel is divided into two or three regions. Region 1 (Figure 3.6-1, items a, b and c) extends from the break to the asymptotic area. Within this region the discharging fluid flashes and undergoes expansion from the break area pressure to the atmospheric pressure. In Region 2 the jet expands further. For partial-separation circumferential breaks, the area increases as the jet expands. In Region 3, the jet expands at a half angle of 10 degrees (Figure 3.6-1, items a and c).
- The analytical model for estimating the asymptotic jet area for subcooled water and saturated water assumes a constant jet area. For fluids discharging from a break that are below the saturation temperature at the corresponding room pressure or have a pressure at the break area equal to the room pressure, the free expansion does not occur.
- The distance downstream from the break where the asymptotic area is reached (Region 2 in Figure 3.6-1) is calculated for circumferential and longitudinal breaks.
- Both longitudinal and fully separated circumferential breaks are treated similarly. The value of fL/D (where, f = friction factor, L/D = pipe length to pipe diameter ratio) used in the blowdown calculation is also used for jet impingement.
- Circumferential breaks with partial (i.e., $h<D/2$) separation between the two ends of the broken pipe not significantly offset (i.e., no more than one pipe wall thickness lateral displacement) are more difficult to quantify. For these cases, the following assumptions are made.
  - The jet is uniformly distributed around the periphery.
  - The jet cross-section at any cut through the pipe axis has the configuration depicted in Figure 3.6-1, item b. The jet regions are also shown.

– The jet force F_j = total blowdown.

The pressure at any point intersected by the jet (P_j) is:

$$P_j = \frac{F_s}{A_R} \tag{3.6-1}$$

where

A_R = the total 360° area of the jet at a radius equal to the distance from the pipe centerline to the target

F_s = Steady State blowdown force

The jet pressure at the target is calculated by:

$$P_1 = \frac{F_j}{A_x} \tag{3.6-2}$$

where

P_1 = incident pressure

A_x= area of the expanded jet at the target intersection.

Target shape factors are included in accordance with ANSI/ANS 58.2 (Reference 3.6-4).

If the effective target area (A_{te}) is less than the expanded jet area ($A_{te} < A_x$), the target is fully submerged in the jet and the impingement load is equal to (P_1) (A_{te}). If the effective target area is greater than the expanded jet area ($A_{te} > A_x$), the target intercepts the entire jet and the impingement load is equal to (P_1) (A_x) = F_j. Where applicable, the net load on the target is determined to be equal to the impingement load (F_j) times the appropriate shape factor of the target surface on which the jet is being impinged upon. The effective target area (A_{te}) for various geometries is as follows:

- Flat Surface — For a case where a target with physical area A_t is oriented at angle ϕ with respect to the jet axis and with no flow reversal, the effective target area A_{te} is:

$$A_{te} = (A_t)(\sin\phi) \tag{3.6-3}$$

- Pipe Surface — As the jet hits the convex surface of the pipe, its forward momentum is decreased rather than stopped; therefore, the jet impingement load on the impacted area is expected to be reduced. For conservatism, no credit is taken for this reduction and the pipe is assumed to be impacted with the full impingement load. However, where shape factors are justifiable, they may be used. The effective target area A_{te} is:

$$A_{te} = (D_A)(D) \tag{3.6-4}$$

where

D_A = diameter of the jet at the target interface

D = pipe outside diameter of target pipe for a fully submerged pipe

When the target (pipe) is larger than the area of the jet, the effective target area equals the expanded jet area

$$A_{te} = A_x \tag{3.6-5}$$

- For all cases, the jet area (A_x) is assumed to be uniform and the load is uniformly distributed on the impinged target area A_{te}.
- Where applicable, on a case-by-case basis, detailed structural analysis of protective devices for safety-related components necessary to achieve and maintain stable shutdown of the plant is performed due to the jet load impact. The analysis steps involved are as follows:

Step 1: Thermal Hydraulic Analysis. A thermal hydraulic analysis of the pipe break is performed to calculate the mass flow rate and pipe reaction force time history through the break, along with the fluid conditions at the break. RELAP5 or TRACG is used for this analysis. The hydrodynamic model is a one-dimensional transient two-phase model with the capability for modeling non-condensable components in the steam phase and/or a soluble component in the water phase. The calculation scheme is based on the conservation of mass, momentum and energy among the control volumes and junctions for each phase, the state equations and constitutive relations (steam generation, wall heat transfer, etc.).

The hydrodynamic model is based on the use of fluid control volumes and junctions to represent the spatial character of the flow. Velocities are located at the junctions and are associated with mass and energy flow between control volumes. The control system provides the capability to evaluate simultaneous algebraic and ordinary differential equations. The capability is primarily intended to simulate control systems typically used in hydrodynamic systems.

A ruptured (circumferential break) pipe geometry is modeled as the control volumes and the required fluid parameters are provided as the input with the appropriate boundary conditions. A thermal hydraulic transient system analysis as a series of control volumes connected by junctions is carried out. RELAP5 or TRACG solves one-dimensional mass, momentum and energy equations for volumes assumed to contain homogeneous or non-homogeneous (as the case may be) fluid with the vapor and liquid phases in thermodynamic equilibrium.

This analysis results include the mass flow rate time history through the break and the pipe reaction force time history among other desired output.

Step 2: ANSYS Computational Fluid Dynamics Analysis. This program uses CFX, solver version 11.0 or the solver Fluent V6.3 included in ANSYS. Using the mass flow rate derived from the thermal hydraulic analysis and considering a worst case pipe displaced configuration (a pipe position that would cause maximum jet impact to the target structure) and defining the target location and its surface geometry in the computational fluid dynamics program as input, the computational fluid dynamics analysis provides results such as the time history of the force on the target. The computational fluid dynamics analysis captures the flow effects associated with the jet unsteadiness, nonlinearity, feedback amplification and jet reflections.

The technical report in Appendix B of Reference 3.6-10 documents a methodology for evaluating blowdown forces created by jet impingement as a result of a high energy line break. The report also documents the benchmarking of the methodology against experimental data and implements the methodology for an ESBWR Main Steamline break. The analysis methodology documented in this report will be used for the ESBWR to develop pipe break models during the detailed design phase that closely represent the geometry of the building volume and equipment being modeled.

Step 3: ANSYS Finite Element Analysis (FEA) Method. This program is used to model the target structure by FEA method. Using force time history as the input load resulting from the computational fluid dynamics analysis on the target structure, the transient dynamic analysis is performed. This dynamic time history analysis addresses the resonance (if any) with the input forcing function. To account for the uncertainty in the resonance frequencies of the target structure finite element model, input force time histories that are shifted in 2.5% increments spanning a ±10% uncertainty are applied to the structural FEA model, ensuring that the worst-case structural response is computed and used to assess structural integrity.

3.6.2.3.2 Pipe Whip Effects on Safety-Related Components

This subsection provides the criteria and methods used to evaluate the effects of pipe displacements on safety-related structures, systems, and components following a postulated pipe rupture.

Pipe whip (displacement) effects on safety-related structures, systems, and components can be placed in two categories: (1) pipe displacement effects on components (nozzles, valves, tees, etc.) which are in the same piping run that the break occurs in; and (2) pipe whip or controlled displacements onto external components such as building structure, other piping systems, cable trays, conduits, etc.

Pipe Displacement Effects on Components in the Same Piping Run

The criteria for determining the effects of pipe displacements on inline components are as follows:

- Components such as vessel safe ends and valves which are attached to the broken piping system and do not serve a safety function or failure of which would not further escalate the consequences of the accident need not be designed to meet ASME B&PV Code Section III-imposed limits for safety-related components under faulted loading.
- If these components are required for safe shutdown or serve to protect the structural integrity of a safety-related component, limits to meet the ASME B&PV Code requirements for faulted conditions and limits to ensure required operability are met.

  The operability qualification of active pipe mounted components is described in Subsection 3.9.3.
- The methods used to calculate the pipe whip loads on piping components in the same run as the postulated break are described in Subsection 3.6.2.2 under paragraph titled “Pipe Whip Dynamic Response Analyses”.

Pipe Displacement Effects on Safety-Related Structures, Systems, and Components

The criteria and methods used to calculate the effects of pipe whip on external components consist of the following:

- The effects on safety-related structures and barriers are evaluated in accordance with the barrier design procedures given in Subsection 3.5.3.
- If the whipping pipe impacts a pipe of equal or greater nominal pipe diameter and equal or greater wall thickness, the whipping pipe does not rupture the impacted pipe. Otherwise, the impacted pipe is assumed to be ruptured.
- If the whipping pipe impacts other components (valve actuators, cable trays, conduits, etc.), it is assumed that the impacted component is unavailable to mitigate the consequences of the pipe break event.
- Damage of unrestrained whipping pipe on safety-related structures, components, and systems other than the ruptured one is prevented by either separating high-energy systems from the safety-related systems or providing pipe whip restraints.

3.6.2.3.3 Loading Combinations and Design Criteria for Pipe Whip Restraint

Pipe whip restraints, as differentiated from piping supports, are designed to function and carry loads for an extremely low-probability gross failure in a piping system carrying high-energy fluid. Piping integrity does not depend on the pipe whip restraints for any piping design loading combination, including an earthquake, but the pipe whip restraints are required to remain functional following an earthquake up to and including the SSE (Subsection 3.2.1). When the piping integrity is lost because of a postulated break, the pipe whip restraint acts to limit the movement of the broken pipe to an acceptable distance. The pipe whip restraints (i.e., those devices which serve only to control the movement of a ruptured pipe following gross failure) could be subjected to a once-in-a-lifetime loading. For the purpose of the pipe whip restraint design, the pipe break is considered to be a faulted condition (Subsection 3.9.3.1) and the structure to which the restraint is attached is analyzed and designed accordingly. The pipe whip restraints are non-ASME B&PV Code components; however, the ASME Code requirements may be used in the design selectively to assure its safety-related function if ever needed. Other methods (i.e., testing) with a reliable database for design and sizing of pipe whip restraints can also be used.

The pipe whip restraints utilize energy absorbing U-rods to attenuate the kinetic energy of a ruptured pipe. A typical pipe whip restraint is shown in Figure 3.6-2. The principal feature of these restraints is that they are installed with several inches of annular clearance between them and the process pipe. This allows for installation of normal piping insulation and for unrestricted pipe thermal movements during plant operation. Select critical locations inside the primary containment are also monitored during hot functional testing to provide verification of adequate clearances prior to plant operation. The specific design objectives for the restraints are:

- The restraints in no way increase the RCPB stresses by their presence during any normal mode of reactor operation or condition.
- The restraint system functions to stop the movement of a pipe failure (gross loss of piping integrity) without allowing damage to critical components or missile development.

- The restraints provide minimum hindrance to in-service inspection of the process piping.

For the purpose of design, the pipe whip restraints are designed for the following dynamic loads:

- Blowdown thrust of the pipe section that impacts the restraint.
- Dynamic inertia loads of the moving pipe section, which is accelerated by the blowdown thrust and subsequent impact on the restraint.
- Design characteristics of the pipe whip restraints are included and verified by the pipe whip dynamic analysis described in Subsection 3.6.2.2.
- Because the pipe whip restraints are not contacted during normal plant operation, the postulated pipe rupture event is the only design loading condition.

Strain rate effects and other material property variations have been considered in the design of the pipe whip restraints. The material properties utilized in the design have included one or more of the following methods:

- Applicable code minimum or specification yield and ultimate strength values for the affected components and structures are used for both the dynamic and steady-state events.
- Not more than a 10% increase in minimum code or specification strength values is used when designing components or structures for the dynamic event, and code minimum or specification yield and ultimate strength values are used for the steady-state loads.
- Representative or actual test data values are used in the design of components and structures including justifiably elevated strain rate-affected stress limits in excess of 10%.
- Representative or actual test data are used for any affected component(s) and the minimum code or specification values are used for the structures for the dynamic and the steady-state events.

3.6.2.4 Guard Pipe Assembly Design

The ESBWR does not require guard pipes.

3.6.2.5 [Pipe Break Analysis Results and Protection Methods

The following information shall be provided in a pipe break evaluation report that will be completed in conjunction with closure of Inspections, Tests, Analyses and Acceptance Criteria (ITAAC) Tier 1, Table 3.1-1 related to pipe break analysis report:

- *A summary of the dynamic analyses applicable to high-energy piping systems in accordance with Subsection 3.6.2.5 of RG 1.70. This shall include the following:*
  - *Sketches of applicable piping systems showing the location, size and orientation of postulated pipe breaks and the location of pipe whip restraints and jet impingement barriers.*
  - *A summary of the data developed to select postulated break locations including calculated stress intensities, cumulative usage factors and stress ranges as delineated in BTP 3-4.*

- *For failure in the moderate-energy piping systems, descriptions showing how safety-related systems are protected from the resulting jets, flooding and other adverse environmental effects.*
- *Identification of protective measures provided against the effects of postulated pipe failures for protection of each of the systems listed in Tables 3.6-1 and 3.6-2.*
- *The details of how the MSIV functional capability is protected against the effects of postulated pipe failures.*
- *Typical examples, if any, where protection for safety-related systems and components against the dynamic effects of pipe failures include their enclosure in suitably designed structures or compartments (including any additional drainage system or equipment environmental qualification needs).*
- *The details of how the feedwater line check and feedwater isolation valves functional capabilities are protected against the effects of postulated pipe failures.*]*

* Text sections that are bracketed and italicized with an asterisk following the brackets are designated as Tier 2*. Prior NRC approval is required to change.

3.6.2.6 Analytic Methods to Define Blastwave Interaction to SSCs

SSCs are evaluated for the blast wave effects. The blast wave occurs as a result of a pipe rupture that creates a rapid wave propagation of air surrounding the break due to the differential pressure between the rupture of a pressurized fluid in pipe and the ambient air. The blast effects are evaluated from all break types such as for the circumferential and longitudinal breaks for high and moderate energy piping systems. The wave propagation of the blast wave is dependent on the following conditions:

Blast Wave Due to a Pipe Rupture Occurring in an Open Space

The blast wave in an open space is considered as spherically expanding wave front. The blast wave pressure intensity is determined based on the pressure difference between pipe internal pressure prior to the pipe break and surrounding air at the break point, and the pressure attenuation occurs based on the radius cubed of the spherically expanding wave front.

Blast Wave Due to a Pipe Rupture Occurring in an Enclosed Space

Blast wave in an enclosed space experiences the propagation of shock wave and reflected wave effects. As the shock wave continues to propagate outward along the enclosed surface, a front known as the Mach front is formed by the interaction of the incident wave and the reflected wave. The reflected wave represents the incident wave that has been reinforced by the surrounding surface. Computational fluid dynamic analysis models analyze these phenomena and blast intensities farther from a pipe break location are determined.

Appendix A of Reference 3.6-10 provides a report that evaluates a blast wave induced by a high-energy line break at the feedwater nozzle inside containment. The blast wave propagates into the annular region between the RPV and the shield wall, and reflects between the boundaries of the annulus. This report establishes that a two-dimensional approximation of the annulus is conservative by comparing two-dimensional pressure amplitudes with those computed using a three-dimensional model. The report also establishes that the mesh discretization used is

conservative by comparing pressures and velocities to those from a model generated with a coarser mesh. The methodology used in this report is representative of the methodology that will be used for breaks for which a blast wave calculation is performed.

3.6.3 (Deleted)

3.6.3.1 (Deleted)

3.6.3.2 (Deleted)

3.6.4 As-built Inspection of High-Energy Pipe Break Mitigation Features

An as-built inspection of the high-energy pipe break mitigation features is performed. The as-built inspection confirms that SSCs that are required to be functional during and following an SSE are protected against the dynamic effects associated with high-energy pipe breaks. An as-built inspection of pipe whip restraints, jet shields, structural barriers and physical separation distances is also performed.

For pipe whip restraints and jet shields, the location, the orientation, size and clearances to allow for thermal expansion are inspected. The locations of structures, identified as pipe break mitigation features, are inspected. Where physical separation is considered to be a pipe break mitigation feature, the assumed separation distances are confirmed during inspection.

3.6.5 COL Information

3.6.5-1-A (Deleted)

3.6.6 References

3.6-1 USNRC, "Modification of General Design Criterion 4, Requirements for Protection Against Dynamic Effects of Postulated Pipe Rupture," Federal Register, Volume 52, No. 207, Rules and Regulations, Pages 41288 through 41295, October 27, 1987.

3.6-2 (Deleted)

3.6-3 (Deleted)

3.6-4 ANSI/ANS-58.2-1988 "Design Basis for Protection of Light Water Nuclear Power Plants Against the Effects of Postulated Pipe Rupture."

3.6-5 (Deleted)

3.6-6 (Deleted)

3.6-7 (Deleted)

3.6-8 10 CFR 50 "Domestic licensing of production and utilization facilities."

3.6-9 (Deleted)

3.6-10 GE Hitachi Nuclear Energy "ESBWR Safety Analysis - Additional Information," NEDE-33440P, Revision 2, Class III (Proprietary), March 2010; NEDO-33440, Revision 2, Class I (Non-proprietary), March 2010.

Table 3.6-1

Safety-Related Systems, Components, and Equipment for Postulated Pipe Failures Inside Containment

1. Reactor Coolant Pressure Boundary (up to and including the outboard isolation valves)
2. Containment Isolation System and Containment Boundary (including liner plate)
3. Reactor Protection System (scram signals)
4. Control Rod Drive System (scram/rod insertion)
5. Flow restrictors (passive)
6. Passive Containment Cooling System
7. Gravity-Driven Cooling System (including Fuel and Auxiliary Pools Cooling System interconnecting lines)
8. Isolation Condenser System
9. Standby Liquid Control System
10. The following equipment/systems or portions thereof required to assure the proper operation of those safety-related items listed in items 1 through 9.
    (a) Safety-related electrical systems
    (b) Instrumentation
    (c) Process Sampling System

Table 3.6-2

Safety-Related Systems, Components, and Equipment for Postulated Pipe Failures Outside Containment

1. Containment Isolation System and Containment Boundary
2. Reactor Protection System (scram signals)
3. Control Rod Drive System (scram/rod insertion)
4. Flow restrictors
5. Isolation Condenser System and Passive Containment Cooling System (Fuel and Auxiliary Pools Cooling System make-up lines included)
6. Standby Liquid Control System
7. The following equipment/systems or portions thereof required to assure the proper operation of those safety-related items listed in items 1 through 6, and GDCS function.
   (a) Safety-related Power Supply Systems (DC, Uninterruptible AC)
   (b) Instrumentation
   (c) Process Sampling System

Table 3.6-3

High and Moderate Energy Piping Inside Containment

High Energy Piping Inside Containment

1.	Nuclear Boiler System
2.	Control Rod Drive System (to and from HCU)
3.	Reactor Water Cleanup and Shutdown Cooling System (suction and RPV drain lines)
4.	Isolation Condenser System
5.	Gravity-Driven Cooling System Injection Lines (from RPV to isolation valves)
6.	Standby Liquid Control System Lines

Moderate Energy Piping Inside Containment

1.	Gravity Driven Cooling System
2.	Passive Containment Cooling System
3.	Fuel and Auxiliary Pools Cooling System
4.	Chilled Water System
5.	High Pressure Nitrogen Supply System
6.	Service Air System
7.	Equipment and Floor Drain System

Table 3.6-4

High and Moderate Energy Piping Outside Containment

High Energy Piping Outside Containment

1.	Reactor Water Cleanup and Shutdown Cooling System
2.	Nuclear Boiler System Lines in Steam Tunnel
3.	Control Rod Drive System (from CRD pumps to HCU and to FW lines and from HCU to containment penetrations)
4.	Standby Liquid Control Lines
5.	Isolation Condenser System Lines

Moderate Energy Piping Outside Containment

1.	Containment Inerting System
2.	Fuel and Auxiliary Pools Cooling System
3.	Chilled Water System
4.	Control Rod Drive System (pump suction line only)
5.	Makeup Water System
6.	Fire Protection System
7.	Service Air System
8.	High Pressure Nitrogen Supply System
9.	Instrument Air System
10.	Equipment and Floor Drain System
11.	Passive Containment Cooling System

Table 3.6-5

Terminal Pipe End Breaks at RPV Nozzles – High Energy Piping Systems

Terminal Pipe End Breaks for Systems	Location	System Condition	Jet Type	Analysis Method (Note 7)	Rupture Restraint Device Required (Note 6)
30” Main Steam Nozzle (Note 2)	RPV (Four nozzles)	Steam	Compressible, supersonic, turbulent, unsteady and expanding Quality: superheated steam	Jet by CFD Target by FEA	Note 3
12” FW Nozzle	RPV (Six nozzles) (Note 1)	Saturated Water	Compressible (mildly), expanding Quality: subcooled (some flashing can occur)	Enveloped by 12” RWCU analysis	Note 3
12” RWCU Nozzle	RPV (Two nozzles) (Note 1)	Saturated Water	Compressible (mildly), expanding Quality: subcooled (some flashing can occur)	Jet by CFD Target by FEA	Note 3
2” RWCU Drain Nozzle	RPV (Four nozzles located on bottom head of the RPV) (Note 1)	Saturated Water	Compressible, expanding Quality: subcooled (some flashing can occur)	Enveloped by 12” RWCU analysis	Note 4
18” IC Nozzle (Note 2)	RPV (Four nozzles) (Note 1)	Steam	Compressible, supersonic, turbulent, unsteady and expanding Quality: superheated steam	Jet by CFD Target by FEA	Note 3
8” IC Return Nozzle	RPV (Four nozzles) (Note 1)	Saturated Water	Compressible, expanding Quality: subcooled (some flashing can occur)	Enveloped by 12” RWCU analysis	Note 4
6” GDCS Nozzle (Note 2)	RPV (Eight nozzles) (Note 1)	Saturated Water	Compressible, expanding Quality: subcooled (some flashing can occur)	Enveloped by 12” RWCU analysis	Note 4
6” GDCS Equalizing Nozzle (Note 2)	RPV (Four nozzles) (Note 1)	Saturated Water	Compressible, expanding Quality: subcooled (some flashing can occur)	Enveloped by 12” RWCU analysis	Note 4
2” Stand-by Liquid Control Nozzle	RPV (Two nozzles) (Note 1)	Low Temp. Water	Compressible, expanding Quality: subcooled	Enveloped by 12” RWCU analysis	Note 4
2” RPV Level Inst. System (RVLIS) Piping (4 nozzles)	RPV (Four nozzles) (Note 1)	Steam	Compressible, supersonic, expanding Quality: superheated steam	Enveloped by 12” RWCU analysis	Note 4
2” Head Vent Nozzle	RPV (One nozzle) (Note 1)	Steam	Compressible, Supersonic, Expanding Quality: Super heated Steam	Enveloped by 12” RWCU analysis	Note 4
1-1/4” CRD Pipe at CRD Housing	269 Housings (On bottom shell of the RPV)	Low Temp. Water	Compressible, Non-expanding Quality: Subcooled	N/A	Note 5

Notes:
1. The terminal end location is within the Annulus formed by the RPV and Shield wall.
2. The nozzle has Venturi.
3. Rupture restraint device is required.

4. Rupture restraint function can be achieved by stiff pipe support structural hardware.
5. Rupture restraint device is not required.
6. The use of pipe restraints is subject to the final results of the high energy line break evaluations.
7. The analysis methods listed are used for forward flow cases from the reactor vessel and for reverse flow cases. CFD/FEA analyses include consideration of jet reflections.

Table 3.6-6

Terminal Pipe End Breaks Outside Containment – High Energy Piping Systems

Terminal Pipe End Breaks for Systems	Pipe Break Locations	Building	System Condition	Jet Type	Analysis Method (Note 5)	Rupture Restraint Device Required (Note 4)
30” Main Steam Pipe	At header near Turbine Stop Valve	Turbine Building	Enveloped by 12” RWCU analysis Steam	Compressible, supersonic, expanding, turbulent, and unsteady Quality: superheated steam	Enveloped by 30” Main Steam Nozzle CFD analysis (Table 3.6-5)	Note 2
24” FW Pipe	At FW Heater nozzles Number of heaters = 6 (all in concrete wall enclosures)	Turbine Building	Saturated Water	Compressible, expanding Quality: subcooled	Jet by CFD Target by FEA	Note 2
6” & 8” RWCU Piping	At Regenerative Heat Exchanger (in a room)	Reactor Bldg.	Hot Water (for Regenerative Heat Exchanger inlet) Low Temp. Water (for Regenerative Heat Exchanger inlet)	Compressible, expanding (for Regenerative Heat Exchanger inlet), non-expanding for outlet (for Regenerative Heat Exchanger inlet) Quality: subcooled	Scale load based on 12” RWCU Nozzle CFD analysis (Table 3.6-5)	Note 2
12” RWCU Piping	At Non- Regenerative Heat Exchanger (in a room)	Reactor Bldg.	Low Temp. Water	Compressible, non-expanding Quality: subcooled	Results from 12” RWCU Nozzle CFD analysis (Table 3.6-5) are used	Note 2
8” and 12” RWCU Pump nozzles	RWCU pumps inlet (in a room)	Reactor Bldg.	Low Temp. Water	Compressible, non-expanding Quality: subcooled	Results from 12” RWCU Nozzle CFD analysis (Table 3.6-5) are used	Note 1
8” and 12” RWCU Pump	RWCU pumps outlet (in a room)	Reactor Bldg.	Low Temp. Water	Compressible, non-expanding Quality: subcooled	Results from 12” RWCU Nozzle CFD analysis (Table 3.6-5) are used	Note 1
6” RWCU piping	RWCU Demineralizer tank inlet & outlet	Reactor Bldg.	Low Temp. Water	Compressible, non-expanding Quality: subcooled	Scale load based on 12” RWCU Nozzle CFD analysis (Table 3.6-5) (Note 6)	Note 1
8” IC Piping with ≈ 3”Dia. Venturi	At Inlet of Isolation Condenser in IC/PCCS Pool submerged in the water	Reactor Bldg.	Hot Water	Heat Exchanger nozzles submerged in the pool (jetting will not occur)	None required	Note 3

Table 3.6-6

Terminal Pipe End Breaks Outside Containment – High Energy Piping Systems

Terminal Pipe End Breaks for Systems	Pipe Break Locations	Building	System Condition	Jet Type	Analysis Method (Note 5)	Rupture Restraint Device Required (Note 4)
4" IC Piping	At Outlet of Isolation Condenser in IC/PCCS Pool submerged in the water	Reactor Bldg.	Hot Water	Heat Exchanger nozzles submerged in the pool (jetting will not occur)	None required	Note 3
3" Stand-by Liquid Control Piping	At SLC Tank Outlet (in a room)	Reactor Bldg.	Low Temp. Water	Compressible, non-expanding Quality: subcooled	Hand Calculation using DLF of 2.0 for loads (Note 6)	Note 1
1-1/4" CRD Piping (269 Lines)	At HCU (Hydraulic Control Units)	Reactor Bldg.	Low Temp. Water	Compressible, non-expanding Quality: subcooled	N/A (see Section 3.6.2.1.3)	Note 3

Notes:
1. This break is located in a separate room & has no other safety-related components. The pipe whip and jet interactions are limited within its system and components. The need for pipe rupture device is determined during the detailed design phase.
2. Rupture restraint device is required.
3. Rupture restraint device is not required.
4. The use of pipe restraints is subject to the final results of the high energy line break evaluations.
5. Unless otherwise indicated, the analysis methods listed are used for forward flow cases from the reactor vessel; reverse flow cases are not performed. CFD/FEA analyses include consideration of jet reflections.
6. The reverse flow case is also evaluated for these pipe end breaks, using the same analysis method listed for the forward flow case.

Table 3.6-7

Terminal End Breaks at Containment Penetrations

(Inside and Outside the Drywell)

Penetration Number	Description	Pipe Dia, mm (in) (Note 6)	System Condition	Jet Type	Analysis Method (Note 8)	Rupture Restraint Device Required (Note 5 & Note 7)
B21-MPEN-0001 through 4	Main Steam Line A through D	750 (30)	Steam	Same as in Tables 3.6-5 and 3.6-6	Results from 30" Main Steam Nozzle (Table 3.6-5) are used; Target by FEA	Note 1
B21-MPEN-0006 & 7	Feedwater Line A & B	550 (22)	Saturated Water	Same as in Tables 3.6-5 and 3.6-6	Jet by CFD Target by FEA	Note 1
B21-MPEN-0005	Main Steam Drain Header	100 (4)	Steam/Hot Water (*)	Compressible, supersonic, turbulent, unsteady and expanding Quality: superheated steam	Hand Calculation using DLF of 2.0 for loads; Target by hand calculation	Note 1
B32-MPEN-0001 through 4	IC Train A, B, C & D Steam Supply Line	350 (14)	Steam	Compressible, supersonic, turbulent, unsteady and expanding Quality: superheated steam	Results from 18" IC Nozzle (Table 3.6-5) are used; Target by FEA	Note 2
B32-MPEN-0005 through 8	IC Train A, B, C & D Condensate Return	200 (8)	Hot water	Compressible, expanding Quality: subcooled (some flashing can occur)	Scale load based on 12" RWCU Nozzle CFD analysis (Table 3.6-5); Target by FEA	Note 3
C12-MPEN-0001 through 12	FMCRD: Hydraulic Lines	32 (1.25)	Low Temp. Water	Compressible & non-expanding Quality: Sub-cooled	N/A (see Section 3.6.2.1.3)	Note 4
C41-MPEN-0001 & 2	SLC (Train A & B)	80 (3)	Low Temp. Water	- Compressible, Expanding Quality: Sub-cooled (inside Cont.) - Compressible, non-Expanding Quality: Low temp water (outside)	Hand Calculation using DLF of 2.0 for loads; Target by hand calculation	Note 3
G31-MPEN-0001 & 2	RWCU	300 (12)	Hot water	Compressible (mildly) Expanding Quality: Subcooled (Some flashing can occur)	Results from 12" RWCU Nozzle CFD analysis (Table 3.6-5) are used; Target by FEA	Note 1

Penetration Number	Description	Pipe Dia, mm (in) (Note 6)	System Condition	Jet Type	Analysis Method (Note 8)	Rupture Restraint Device Required (Note 5 & Note 7)
G31-MPEN-0003 & 4	RPV Bottom Drain Line	150 (6)	Hot Water	Compressible, Expanding Quality: sub-cooled (Some flashing can occur)	Scale load based on 12" RWCU Nozzle CFD analysis (Table 3.6-5); Target by FEA	Note 1

Notes:
1. Rupture restraint device is required on piping (inside and outside the penetration) near isolation valve.
2. Rupture restraint device is required inside the drywell side of the penetration only. This line penetrates the upper drywell through penetration into the IC/PCCS pool.
3. Rupture restraint function can be achieved by stiff pipe support structural hardware.
4. Rupture restraint device is not required.
5. See Figure 3.6-3 (Typical) for pipe break location.
6. Pipe diameter may be reduced at the containment penetration.
7. The use of pipe restraints is subject to the final results of the high energy pipe break evaluations.
8. The analysis methods listed are used for forward flow cases from the reactor vessel and for reverse flow cases. CFD/FEA analyses include consideration of jet reflections.

(*) – System is functional during plant startup only.

Legend:
B21 – System identification
MPEN-0001 – Mechanical Penetration 0001.
CFD – Computational fluid dynamics
FEA – Finite element analysis
DLF – Dynamic load factor

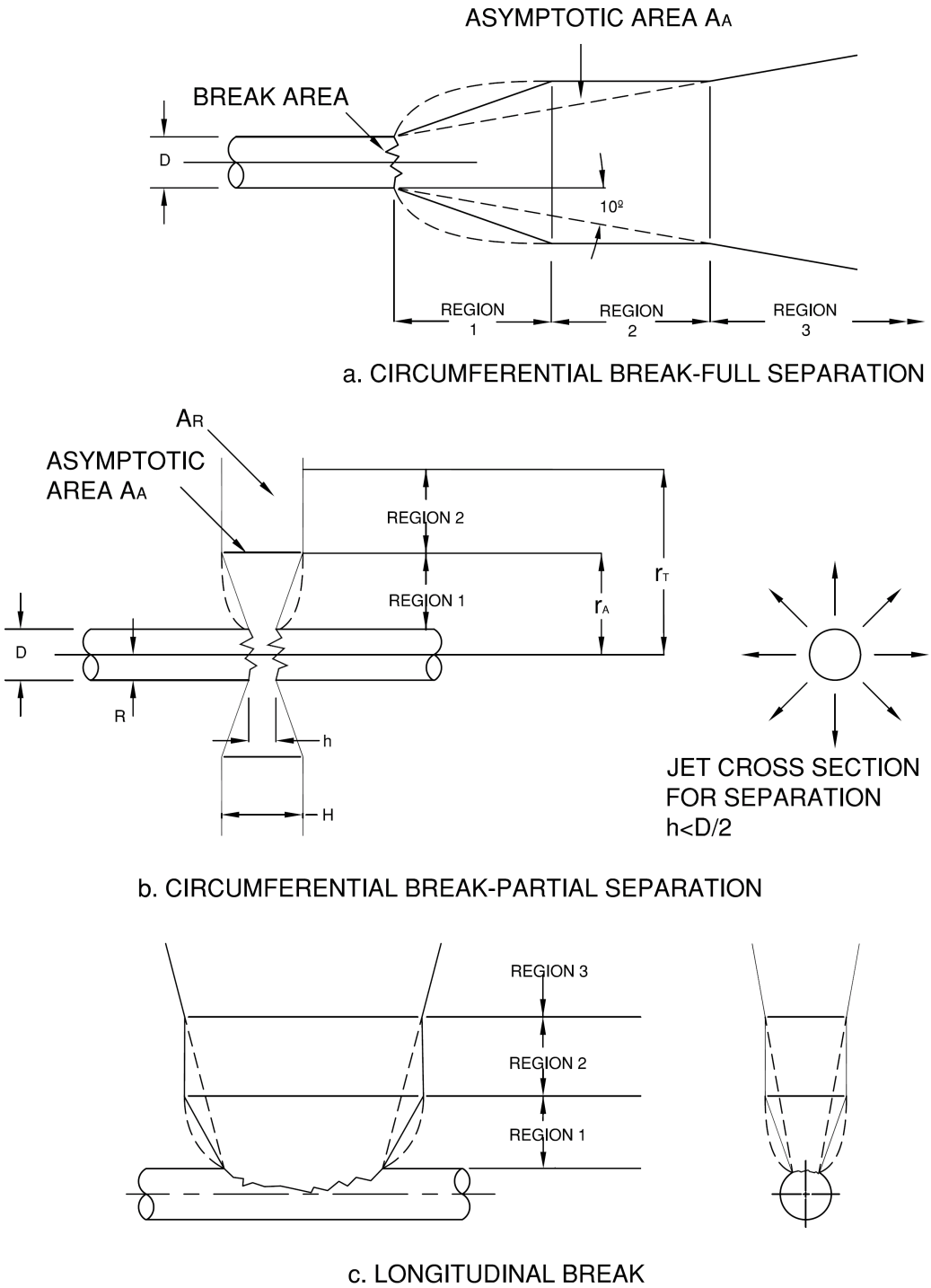

Figure 3.6-1. Jet Characteristics

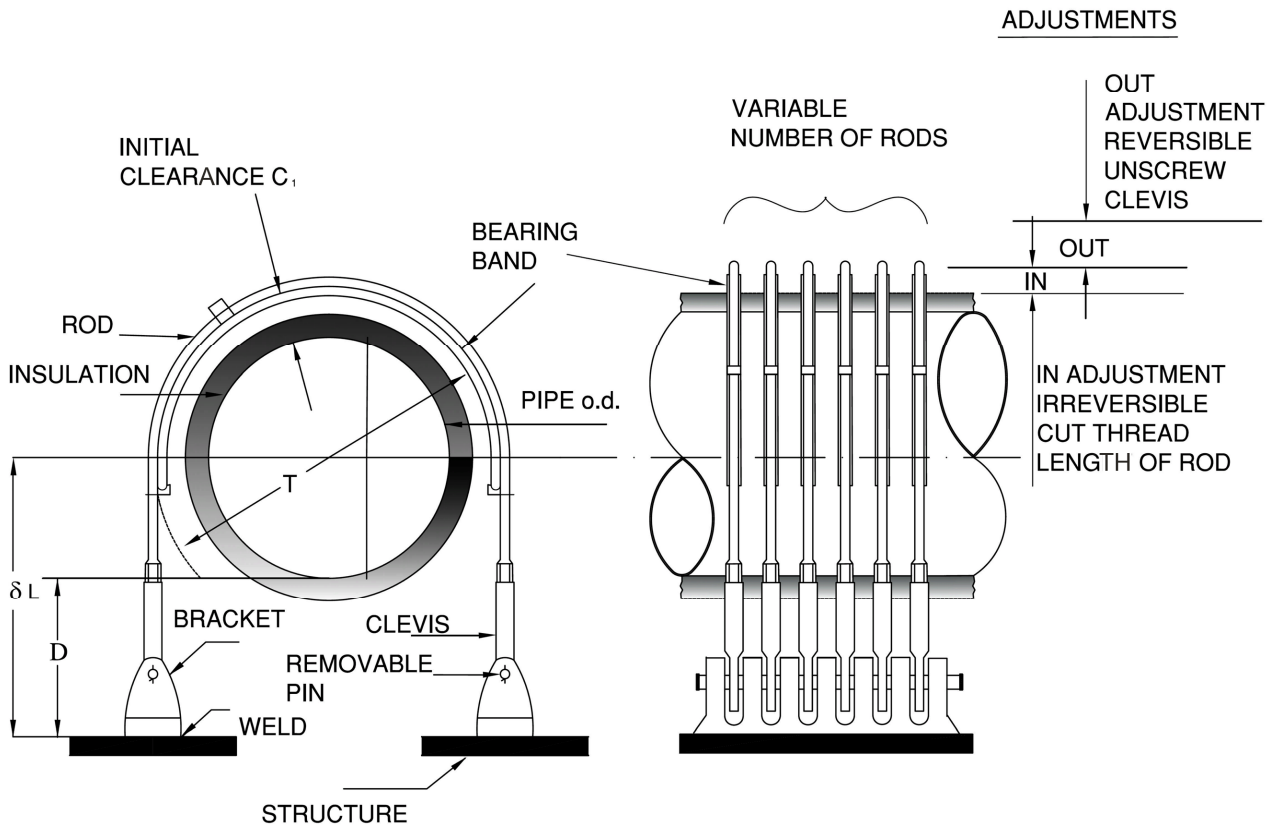

Figure 3.6-2. Typical Pipe Whip Restraint Configuration

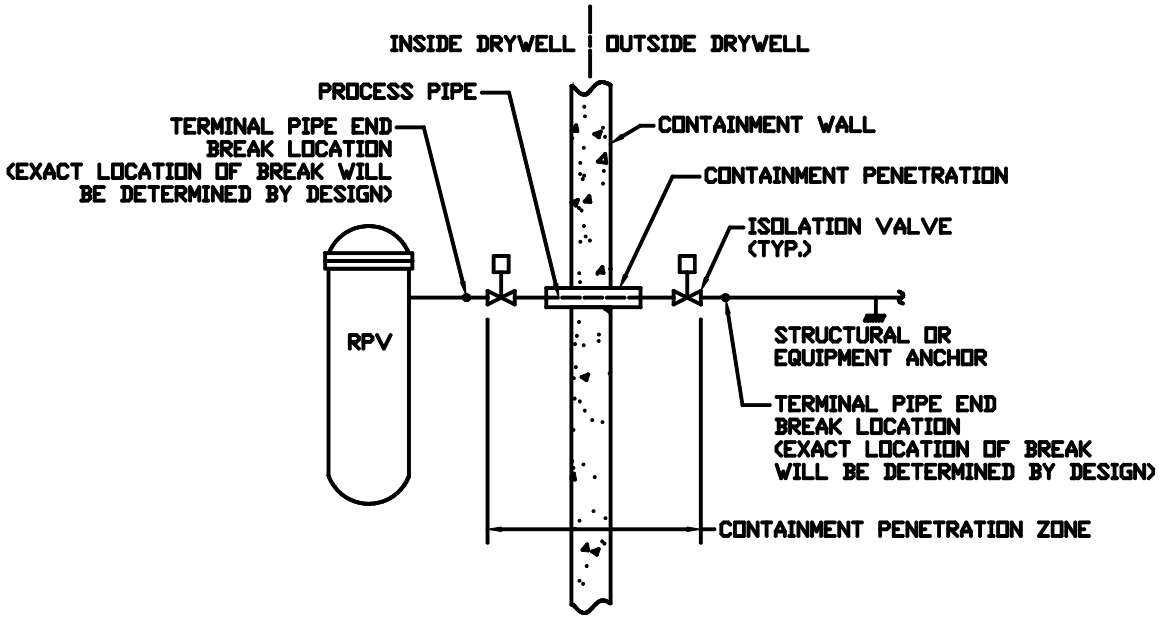

Figure 3.6-3. Typical Terminal End Break at Containment Penetration

3.7 SEISMIC DESIGN

For seismic design purposes, all structures, systems, and components of the ESBWR standard plant are classified into Seismic Category I, Seismic Category II, or Seismic Category NS in accordance with the requirements to withstand the effects of the SSE as described in Section 3.2. For those Seismic Category I and Seismic Category II structures, systems and components (SSCs) in the Reactor Building (RB) complex, the effects of other dynamic loads caused by Reactor Building vibration (RBV) caused by suppression pool dynamics are also considered in the design. Although this section addresses seismic aspects of design and analysis in accordance with Regulatory Guide (RG) 1.70, the methods of this section are also applicable to RBV dynamic loadings, unless noted otherwise.

The SSE is that earthquake which is based upon an evaluation of the maximum earthquake potential considering the regional and local geology, seismology, and specific characteristics of local subsurface material. It is the earthquake that produces the maximum vibratory ground motion for which Seismic Category I SSCs are designed to remain functional and within applicable stress, strain, and deformation limits. These systems and components are those necessary to ensure the following:

- The integrity of the reactor coolant pressure boundary;
- The capability to shut down the reactor and maintain it in a safe condition; or
- The capability to prevent or mitigate the consequences of accidents which could result in potential offsite exposures comparable to the applicable exposure limits set forth in 10 CFR 100 (10 CFR 52.47(a)(2)(iv)).

In response during an earthquake (up to SSE), the ESBWR will shut down and maintain safety using the Automatic Depressurization System and Gravity Driven Cooling System as described in the Probabilistic Risk Assessment. In this case, depressurization is accomplished in part with depressurization valves that remain open in order for the Gravity Driven Cooling System and the Passive Containment Cooling System to perform their safety functions.

Seismic Category II includes all plant SSCs which perform no safety-related function, and whose continued function is not required, but whose structural failure or interaction could degrade the functioning of a Seismic Category I structure, system or component to an unacceptable safety level, or could result in incapacitating injury to occupants of the control room. Thus, this category includes the SSCs whose structural integrity, not their operational performance, is required. Seismic Category II SSCs that are also classified as RTNSS Criterion B in Tables 19A-2 and 19A-3 are required to remain functional following a seismic event. [*The methods of seismic analysis and design acceptance criteria for Seismic Category II SSCs are the same as Seismic Category I; however, the procurement, fabrication and construction requirements for Seismic Category II SSCs are in accordance with industry practices. Seismic Category II items are those corresponding to position C.2 of RG 1.29.*

The operating basis earthquake (OBE) is a design requirement. For the ESBWR OBE, ground motion is chosen to be one-third of the SSE ground motion.]* Therefore, no explicit response or design analysis is required to show that OBE design requirements are met. This is consistent with Appendix S to 10 CFR 50. The effects of low-level earthquakes (lesser magnitude than the

SSE) on fatigue evaluation and plant shutdown criteria are addressed in Subsections 3.7.3.2 and 3.7.4.4, respectively.

Text sections that are bracketed and italicized with an asterisk following the brackets are designated as Tier 2. Prior NRC approval is required to change.

3.7.1 Seismic Design Parameters

As discussed in Standard Review Plan (SRP) 3.7.1, structures that are safety-related and that must withstand the effects of earthquakes are designed to the relevant requirements of GDC 2 and comply with Appendix S to 10 CFR 50 concerning natural phenomena. Standardized plants envelop the most severe earthquakes that affected a great number of sites where a nuclear plant may be located, with sufficient margin considering the limits of accuracy, quantity and period of time during which historical data have been accumulated. Seismic design parameters considered for ESBWR comprise two site conditions, generic sites and early site permit (ESP) sites. Two sites, Clinton (Reference 3.7-3) and Grand Gulf (Reference 3.7-4), have received ESPs. NRC is currently reviewing an ESP application from North Anna (Reference 3.7-2). A review of the three site conditions reveals that Clinton and Grand Gulf are bounded by the envelope of generic site and North Anna conditions. North Anna ESP site is therefore selected for further consideration in conjunction with generic sites for site enveloping seismic design of the ESBWR Standard Plant.

3.7.1.1 Design Ground Motion

The ESBWR standard plant SSE design ground motion is rich in both low and high frequencies. The low-frequency ground motion follows RG 1.60 ground spectra anchored to 0.3 g. The high-frequency ground motion matches the North Anna ESP site-specific spectra as representative of most severe rock sites in the Eastern US. These two ground motions are considered separately in the basic design. To verify the basic design the two separate inputs are further enveloped to form a single ground motion as the design basis ground motion for ESBWR. The single envelope design ground response spectra of 5% damping, also termed certified seismic design response spectra (CSDRS), are shown in Figures 2.0-1 and 2.0-2 for horizontal and vertical direction, respectively. They are defined as free-field outcrop spectra at the foundation level (bottom of the base slab) of the Reactor Building/Fuel Building (RB/FB) and Control Building (CB) structures. Application of design ground motion at the foundation level is a conservative approach for deeply embedded foundations as compared to the compatible free-field motion deconvoluted from the free ground surface motion at the finished grade. The ESBWR RB and CB foundations are embedded at depths of 20 m (66 ft.) and 14.9 m (49 ft.), respectively. The Fuel Building (FB) shares a common foundation mat with the RB. For the Firewater Service Complex (FWSC), which is essentially a surface founded structure, the CSDRS is 1.35 times the values shown in Figures 2.0-1 and 2.0-2 and is defined as free-field outcrop spectra at the foundation level (bottom of the base slab) of the FWSC structure. The ESBWR CSDRS are higher than RG 1.60 spectra anchored to 0.1 g peak ground acceleration (PGA) at the foundation level, meeting Appendix S to 10 CFR Part 50 regulations for 0.1 g minimum PGA for the horizontal component of the SSE at the foundation level in the free-field. The development of design ground motion is delineated in the following subsections.

3.7.1.1.1 Low-Frequency Ground Motion

The ground response spectra for low-frequency ground motion are developed in accordance with RG 1.60 anchored to 0.3 g and specified at the foundation level in the free field for generic sites. The 0.3 g SSE design response spectra for various damping ratios are shown in Figures 3.7-1 and 3.7-2 for the horizontal and vertical motions, respectively. The horizontal response spectra are equally applicable in two orthogonal horizontal directions.

Seismic input motions in the form of time histories are generated to envelop the design response spectra. The generic site 0.3 g SSE acceleration time histories for two horizontal components (H1 and H2) and vertical component are shown in Figures 3.7-3 through 3.7-5, respectively, together with corresponding velocity and displacement time histories. Each time history has a total duration of 22 seconds.

These time histories satisfy the spectrum-enveloping requirement stipulated in the NRC SRP 3.7.1. The computed response spectra for 2%, 3%, 4%, 5% and 7% damping are compared with the corresponding design RG 1.60 spectra in Figures 3.7-6 through 3.7-10 for the H1 component, in Figures 3.7-11 through 3.7-15 for the H2 component, and in Figures 3.7-16 through Figure 3.7-20 for the vertical component. The response spectra are computed at frequency intervals suggested in Table 3.7.1-1 of SRP 3.7.1 plus three additional frequencies at 40, 50, and 100 Hz.

The time histories of the two horizontal components also satisfy the power spectral density (PSD) requirement stipulated in Appendix A to SRP 3.7.1. The computed PSD functions envelop the target PSD of a maximum 0.3 g acceleration with a wide margin in the frequency range of 0.3 Hz to 24 Hz as shown in Figures 3.7-21 and 3.7-22 for the H1 and H2 components, respectively. In these figures, the curve labeled as 80% of the target PSD is the minimum PSD requirement.

The target PSD compatible with the RG 1.60 vertical spectrum is not specified in Appendix A to SRP 3.7.1. Using the same methodology on which the minimum PSD requirement of Appendix A to SRP 3.7.1 for the RG 1.60 horizontal spectrum is based, the vertical target PSD compatible with the RG 1.60 vertical spectrum is derived using the following approach (Reference 3.7-15):

(1) Establish initial candidate PSD.

(2) Calculate several time histories using the PSD, each with a different phase function.

(3) Calculate 2% critically damped pseudovelocity response spectrum (PSV) of each time history.

(4) Compare the suite of PSVs from (3) to a target PSV.

(5) If the average of the suite of PSVs does not fit (this is a visual fit) the target PSV, adjust form of PSD and go to Step (2).

(6) Obtain the final PSD.

This vertical target PSD with the following input coefficients for 1.0 g PGA, is defined as $S_o(f)$ at frequency f:

$$S_0(f) = 2289\ cm^2/s^3(f/3.5)^{0.2} \quad f \leq 3.5\ Hz$$
$$= 2289\ cm^2/s^3(3.5/f)^{1.6} \quad 3.5 < f \leq 9.0\ Hz$$
$$= 505\ cm^2/s^3(9.0/f)^{3.0} \quad 9.0 < f \leq 16.0\ Hz$$
$$= 89.9\ cm^2/s^3(16.0/f)^{7.0} \quad f > 16.0\ Hz$$

The PSD function for the vertical component of the design time history (SSE with 0.3 g PGA) is computed and subsequently averaged and smoothed using SRP 3.7.1 criteria. Similarly, the target PSD is computed for 0.3 g maximum acceleration. The PSD of the design time history is compared with the target and 80% of target PSD in Figure 3.7-23. As shown in this figure, PSD of the vertical time history envelops the target PSD by a wide margin. This comparison confirms the adequacy of energy content for the vertical time history.

The time histories of three spatial components are checked for statistical independency. The cross-correlation coefficient at zero time lag is 0.0135 between H1 and H2, 0.0704 between H1 and vertical, and 0.0737 between H2 and vertical. The cross-correlation coefficients are less than 0.16 as recommended in RG 1.92. Thus, H1, H2, and vertical acceleration time histories are mutually statistically independent.

The 0.3 g RG 1.60 input motion is considered in the basic design seismic analysis for generic uniform sites using the DAC3N computer code.

3.7.1.1.2 High-Frequency Ground Motion

The high-frequency ground motion is North Anna site-specific developed in the ESP application. The ESBWR foundation elevations at North Anna ESP site are EL. 205 ft. (62.484 m) for RB/FB and EL. 222 ft. (67.666 m) for CB. Since the low frequency parts of North Anna SSE ground spectra are enveloped by the 0.3 g RG 1.60 generic site spectra with large margins, only the high frequency part is explicitly taken into account. The high frequency SSE ground spectra and compatible time histories at elevations of CB and RB/FB foundation level are shown in Figures 3.7-24 to 3.7-35.

Data	CB Base	RB/FB Base
Horizontal H1 target spectrum	Figure 3.7-24	Figure 3.7-30
Horizontal H1 time histories	Figure 3.7-25	Figure 3.7-31
Horizontal H2 target spectrum	Figure 3.7-26	Figure 3.7-32
Horizontal H2 time histories	Figure 3.7-27	Figure 3.7-33
Vertical target spectrum	Figure 3.7-28	Figure 3.7-34
Vertical time histories	Figure 3.7-29	Figure 3.7-35

The spectrum figures are associated with 5% damping. The PGA values, corresponding to the spectral acceleration at 100 Hz of the target spectra, are 0.492 g at the CB base and 0.469 g at the RB/FB base in both horizontal and vertical directions. The time histories are generated under the spectral matching criteria given in NUREG/CR-6728 and the cross-correlations between the three individual components are all less than the 0.16 requirement. Since a more stringent matching criteria of NUREG/CR-6728 is used, a separate PSD check per SRP 3.7.1.II.1 is not required.

The high-frequency input ground motion thus defined is considered in the basic design seismic analysis for North Anna ESP site condition using the DAC3N computer code.

3.7.1.1.3 Single Envelope Ground Motion

[*The single envelope ground response spectra are constructed to envelope the low-frequency 0.3 g RG 1.60 spectra (Subsection 3.7.1.1.1) and the high-frequency North Anna site-specific spectra (Subsection 3.7.1.1.2). The smoothed target spectra of 5% damping are shown in Table 3.7-2 and in Figures 2.0-1 and 2.0-2.*]* The spectral values up to and including 9 Hz and 10 Hz in the horizontal and vertical directions, respectively, are based on 0.3 g RG 1.60 spectra. At higher frequencies, the spectral values closely match those of the envelope of North Anna ESP spectra at ESBWR RB/FB and CB foundations as a representative ground motion for Eastern US sites founded on rock. Note that there has never been recorded a seismic event containing simultaneously very high low-frequency excitations and very high high-frequency motions. Therefore, this envelope is very conservative in terms of energy content and is used to verify the basic design previously discussed.

[*A single set of three orthogonal, statistically independent time histories is generated to match the target spectra in accordance with NUREG/CR-6728 criteria. The computed response spectra are compared with the corresponding target spectra in Figures 3.7-38 through 3.7-40 for H1, H2 and vertical components, respectively.*]* Spectral matching tests for 5% damping only is consistent with the recommendations of NUREG/CR-6728 (Reference 3.7-18) for specifying ground-motions in terms of 5% spectra. Use of 5% only is considered sufficient because there is a strong correlation among the response-spectral ordinates at damping ratios from 1 to 20%. Thus, if a time history matches the 5% target, it is likely to match the targets at other damping ratios. Because the more stringent matching criterion of NUREG/CR-6728 is used, a separate PSD check per SRP 3.7.1.II.1 is not required. Tests referenced in NUREG/CR-6728 indicate that the response-spectrum tests are sufficient.

[*The acceleration time histories are shown in Figures 3.7-41 through 3.7-43, together with corresponding velocity and displacement time histories. Each time history has a total duration of 40 seconds with time steps of 0.005 seconds. The strong motion duration is 7.8 seconds for H1, 12 seconds for H2 and 8.9 seconds for vertical. The cross-correlations between the three individual components are all less than the 0.16 requirement.*

The single envelope ground motion is considered in the design basis seismic analysis for all generic uniform sites using DAC3N and SASSI2000 computer codes and for layered sites using SASSI2000 computer code.]*

Text sections that are bracketed and italicized with an asterisk following the brackets are designated as Tier 2. Prior NRC approval is required to change.

3.7.1.2 Percentage of Critical Damping Values

[*Damping values of various structures and components are shown in Table 3.7-1 for use in SSE dynamic analysis. These damping values are consistent with RG 1.61 Revision 1 SSE damping.*]*

For ASME Section III, Division 1 Class 1, 2, and 3, and ASME B31.1 piping systems, the damping values of Table 3.7-1 or alternative damping values specified in Figure 3.7-37 are used. The damping values shown in Table 3.7-1 are applicable to all modes of a structure or component constructed of the same material. Damping values for systems composed of subsystems with different damping properties are obtained using the procedures described in Subsection 3.7.2.13.

Text sections that are bracketed and italicized with an asterisk following the brackets are designated as Tier 2. Prior NRC approval is required to change.

3.7.1.3 Supporting Media for Category I Structures

The Seismic Category I structures have concrete mat foundations supported on soil, rock or compacted backfill. [*The embedment depth, dimensions of the structural foundation, and total structural height for each structure are given in Subsection 3.8.5.1. The soil conditions considered for soil-structural interaction analysis are described in Appendix 3A.*]*

Text sections that are bracketed and italicized with an asterisk following the brackets are designated as Tier 2. Prior NRC approval is required to change.

3.7.2 Seismic System Analysis

This section applies to building structures that constitute primary structural systems (RB, FB, CB, and FWSC). The reactor pressure vessel (RPV) is not a primary structural component but, due to its dynamic interaction with the supporting structure, it is considered as another part of the primary system of the RB for the purpose of dynamic analysis. [*Table 3.7-3 provides a summary of seismic analysis methods for primary building structures.*]*

Text sections that are bracketed and italicized with an asterisk following the brackets are designated as Tier 2. Prior NRC approval is required to change.

3.7.2.1 Seismic Analysis Methods

Analysis can be performed using any of the following methods:

- time history;
- response spectrum;
  - singly- or multi-supported system with Uniform Support Motion (USM); or
  - multi-supported system with independent support motion (ISM); or
- static coefficient.

3.7.2.1.1 Time History Method

The response of a multi-degree-of-freedom linear system subjected to external forces or uniform support excitations is represented by the following differential equations of motion in the matrix form:

$$[M]\{\ddot{u}\} + [C]\{\dot{u}\} + [K]\{u\} = \{P\} \tag{3.7-1}$$

where,

$[M]$ = mass matrix

$[C]$ = damping matrix

$[K]$ = stiffness matrix

$\{u\}$ = column vector of time-dependent relative displacements

$\{\dot{u}\}$ = column vector of time-dependent relative velocities

$\{\ddot{u}\}$ = column vector of time-dependent relative accelerations

$\{P\}$ = column vector of time-dependent applied forces

= $-[M]\{\ddot{x}_g\}$ for support excitation in which $\{\ddot{x}_g\}$ is column vector of time-dependent support accelerations

The above equation can be solved by modal superposition or direct integration in the time domain, or by the complex frequency response method in the frequency domain. For the time domain solution, the numerical integration time step is sufficiently small to accurately define the dynamic excitation and to render stability and convergence of the solution up to the highest frequency (or shortest period) of significance. For most of the commonly used numerical integration methods (such as Newmark β-method and Wilson θ-method), the maximum time step is limited to one-tenth of the shortest period of significance. The adequacy of the selected time step (Δt) is checked by ensuring that use of ½ of Δt does not change the response by more than 10%. For the frequency domain solution, the dynamic excitation time history is digitized with time steps no larger than the inverse of two times the highest frequency of significance and the frequency interval is selected to accurately define the transfer functions at structural frequencies within the range of significance.

The modal superposition method is used when the equation of motion (Equation 3.7-1) can be decoupled using the transformation,

$$\{u\} = [\phi]\{q\} \tag{3.7-2}$$

where,

$[\phi]$ = mode shape matrix; often mass normalized, i.e.,
$[\phi]^T[M][\phi] = [1]$

$\{q\}$ = column vector of normal or generalized coordinates

Substituting Equation 3.7-2 into Equation 3.7-1 and multiplying each term by the transposition of the mode shape matrix results in the uncoupled equation of motion due to the orthogonality of

the mode shapes (note that the orthogonality condition of the damping matrix is assumed). For systems subjected to base acceleration excitation, $\ddot{x}_g$, the equation of motion for the jth mode is

$$\ddot{q}_j + 2\lambda_j\omega_j\dot{q}_j + \omega_j^2 q_j = -\Gamma_j\ddot{x}_g \tag{3.7-3}$$

where

q_j	=	generalized coordinate of jth mode
λ_j	=	damping ratio of jth mode, expressed as fraction of critical damping
ω_j	=	undamped circular frequency of jth mode
Γ_j	=	modal participation factor of jth mode
	=	$\{\phi_j\}^T[M]\{1\} / (\{\phi_j\}^T[M]\{\phi_j\})$

The final solution for each mode is obtained by the transformation from the generalized coordinates back to the physical coordinates. The total response is the superposition of the modal responses. All modes with frequencies up to the zero period acceleration (ZPA) frequency are included in the modal superposition and the residual rigid response due to the missing mass is accounted for in accordance with the methods described in Subsection 3.7.2.7.

The system equation of motion (Equation 3.7-1) can be solved directly using the direct integration method in the time domain without the need to revert to decoupling by the coordinate transformation for mode superposition.

The system equation of motion (Equation 3.7-1) can also be solved in the frequency domain using the complex frequency response method. This method requires that the transfer functions be determined first and the applied forces be transformed into frequency domain. The transfer functions can be computed directly from the system equations of motion or from the normal mode approach. The Fast Fourier Transform (FFT) algorithm is commonly used for the transformation between the time domain and frequency domain. To facilitate the FFT operation, the total number of digitized points of the excitation time history is a power of two, which can always be achieved by adding trailing zeros to the actual record. For damped systems, these trailing zeros also serve as a quiet zone, which allows the transient response motions to die out at the end of the duration to avoid cyclic overlapping in the discrete Fourier transform procedure.

For multi-supported systems subjected to ISM, the ISM method of analysis described in Subsection 3.7.2.1.2 can also be performed using the time history method.

The frequency domain solution is not used in the piping system response analysis.

3.7.2.1.2 Response Spectrum Method

a) Singly- or Multi-Supported System with USM

This method, applicable to singly-supported systems or multi-supported systems with USMs, is the modal superposition method described in Subsection 3.7.2.1.1 except that only the peak values of the solutions of the decoupled modal equations (Equation 3.7-3) are obtained. The maximum response in terms of the generalized coordinate for jth mode is

$$(q_j)_{max} = \Gamma_i \left(\frac{S_{aj}}{\omega_j^2} \right) \tag{3.7-4}$$

where S_{aj} is the spectral acceleration of the input spectrum corresponding to frequency ω_j for a specified damping factor. The maximum displacement of node i for mode j in the physical coordinate is

$$(u_{ij})_{max} = \phi_{ij}(q_j)_{max} \tag{3.7-5}$$

The maximum modal displacement is then used to determine other modal response quantities, such as forces. The applicable methods of modal response combination are defined in Subsection 3.7.2.7.

b) Multi-Supported System with ISMs

This method is applicable to linear dynamic systems which are supported at two or more locations and have different excitations applied at each support. The governing equation of motion is expressed in the following partitioned matrix form:

$$\begin{bmatrix} M_a & O \\ O & M_s \end{bmatrix} \begin{Bmatrix} \ddot{U}_a \\ \ddot{U}_s \end{Bmatrix} + \begin{bmatrix} C_{aa} & C_{as} \\ C_{as} & C_{ss} \end{bmatrix} \begin{Bmatrix} \dot{U}_a \\ \dot{U}_s \end{Bmatrix} + \begin{bmatrix} K_{aa} & K_{as} \\ K_{as} & K_{ss} \end{bmatrix} \begin{Bmatrix} U_a \\ U_s \end{Bmatrix} = \begin{Bmatrix} F_a \\ F_s \end{Bmatrix} \tag{3.7-6}$$

where

U_a	=	displacements of active (unsupported) degrees of freedom
U_s	=	specified displacements of support points
M_a and M_s	=	diagonal mass matrices associated with active degrees of freedom and support points, respectively
O	=	null matrix
C_{aa} and K_{aa}	=	damping and stiffness matrices, respectively, associated with active degrees of freedom
C_{ss} and K_{ss}	=	support forces caused by unit velocities and displacements of supports, respectively
C_{as} and K_{as}	=	damping and stiffness matrices, respectively, denoting the coupling forces developed in the active degrees of freedom by the motion of the supports and vice versa
F_a	=	prescribed external forces applied on the active degrees of freedom
F_s	=	reaction forces at the system support points

Total differentiation with respect to time is denoted by (•) above a variable in Equation 3.7-6. Also, the contributions of the fixed degrees of freedom have been removed in the equation. Equation 3.7-6 can be separated into two sets of equations. The first set of equations can be written as:

$$[M_s]\{\ddot{U}_s\} + [C_{ss}]\{\dot{U}_s\} + [K_{ss}]\{U_s\} + [C_{as}]\{\dot{U}_a\} + [K_{as}]\{U_a\} = \{F_s\} \tag{3.7-7}$$

and the second set as:

$$[M_a]\{\ddot{U}_a\} + [C_{aa}]\{\dot{U}_a\} + [K_{aa}]\{U_a\} + [C_{as}]\{\dot{U}_s\} + [K_{as}]\{U_s\} = \{F_a\} \quad (3.7\text{-}8)$$

The timewise solution of Equation 3.7-8 can be obtained easily by using the standard normal mode solution technique. After obtaining the displacement response of the active degrees of freedom (U_a), Equation 3.7-7 can then be used to solve for the support point reaction forces (F_s). Analysis can be performed using either the time history method or response spectrum method. Additional considerations associated with the ISM response spectrum method of analysis are given in Subsection 3.7.3.9.

[*The response spectrum method is not used for seismic response analysis of primary building structures.*]*

Text sections that are bracketed and italicized with an asterisk following the brackets are designated as Tier 2. Prior NRC approval is required to change.

3.7.2.1.3 Static Coefficient Method

This is an alternative method of analysis that allows a simpler technique in return for added conservatism. This method does not require determination of natural frequencies. The response loads are determined statically by multiplying the mass value by a static coefficient equal to 1.5 times the maximum spectral acceleration at appropriate damping value of the input response spectrum. A static coefficient of 1.5 is intended to account for the effect of both multi-frequency excitation and multi-mode response for linear frame-type structures, such as members physically similar to beams and columns, which can be represented by a simple model similar to those shown to produce conservative results (References 3.7-13 and 3.7-14). A factor of less than 1.5 is used if justified. If the fundamental frequency of the structure is known, the highest spectral acceleration value at or beyond the fundamental frequency can be multiplied by a factor of 1.5 to determine the response. A factor of 1.0 instead of 1.5 can be used if the component is simple enough such that it behaves essentially as a single-degree-of-freedom system. When the component is rigid, it is analyzed statically using the ZPA as input. Structures, systems, and components are considered rigid when the fundamental frequency is equal to or greater than the frequency at which the input response spectrum returns to approximately the ZPA. Relative displacements between points of support are also considered and the resulting response is combined with the response calculated using the equivalent static method. [*The static coefficient method is not used for primary building structures.*]*

Text sections that are bracketed and italicized with an asterisk following the brackets are designated as Tier 2. Prior NRC approval is required to change.

3.7.2.2 Natural Frequencies and Responses

[*Natural frequencies and SSE responses of Category I buildings are presented in Appendix 3A.*]*

Text sections that are bracketed and italicized with an asterisk following the brackets are designated as Tier 2. Prior NRC approval is required to change.

3.7.2.3 Procedures Used for Analytical Modeling

[*The mathematical model of the structural system is developed as a stick model for seismic response analysis of primary building structures.*]* The details of the model are determined by the complexity of the actual systems and the information required from the analysis. In the primary structural system model, the following subsystem decoupling criteria are applicable:

- If $R_m < 0.01$, decoupling can be done for any R_f.
- If $0.01 \leq R_m \leq 0.1$, decoupling can be done if $R_f \leq 0.8$ or $R_f \geq 1.25$.
- If $R_m > 0.1$, a subsystem model should be included in the primary system model

where R_m (mass ratio) and R_f (frequency ratio) are defined as:

R_m = total mass of the supported subsystem/total mass of the supporting system

R_f = fundamental frequency of the supported subsystem/dominant frequency of the support motion.

If the subsystem is comparatively rigid in relation to the supporting system, and also is rigidly connected to the supporting system, it is sufficient to include only the mass of the subsystem at the support point in the primary system model. On the other hand, in case of a subsystem supported by very flexible connections (e.g., pipe supported by hangers), the subsystem need not be included in the primary model. In most cases, the equipment and components, which come under the definition of subsystems, are analyzed (or tested) as a decoupled system from the primary structure and the dynamic input for the former is obtained by the analysis of the latter. One important exception to this procedure is the RPV, which is considered as a subsystem but is analyzed using a coupled model with the primary structure.

In general, three-dimensional models are used with six degrees of freedom assigned to each mass (node) point (i.e., three translational and three rotational). Some dynamic degrees of freedom, such as rotary inertia, can be neglected, since their contribution to the total kinetic energy of the system is small compared to the contribution from translational inertia. A two- or one-dimensional model is used if the directional coupling effect is negligible. Coupling between two horizontal motions occurs when the center of mass, the centroid, and the centroid of rigidity do not coincide. The degree of coupling depends on the amount of eccentricity and the ratio of uncoupled torsional frequency to the uncoupled lateral frequency. Structures are generally designed to keep eccentricities as small as practical to minimize lateral/torsional coupling and torsional response.

Nodal points are selected to coincide with the locations of large masses, such as floors or at heavy equipment supports, at all points where significant changes in physical geometry occur, and locations where the responses are of interest. [*The mass properties in the model include all contributions expected to be present at the time of dynamic excitation, such as dead weight, fluid weight, attached piping and equipment weight, and appropriate part (25% of floor live load or minimum 75% of roof snow load, as applicable) of the live load. For design, 100% of roof snow load is used. The hydrodynamic effects of any significant fluid mass interacting with the structure are considered in modeling of the mass properties.*]* Masses are lumped to node points. Alternatively, the consistent mass formulation is used. The number of masses or dynamic degrees of freedom is considered adequate when additional degrees of freedom do not

result in more than a 10% increase in response. Alternatively, the number of dynamic degrees of freedom is no less than twice the number of modes below the cutoff frequency in Subsection 3.7.2.1.1. For the stick models of the primary building structures, the number of dynamic degrees of freedom is no less than twice the number of modes below 50 Hz.

The RPV, including its major internal components, is analyzed together with the primary structure using a coupled RPV and supporting structural model. The RPV model is constructed following the general modeling procedures described above for the primary structures. The RPV model includes major internal components such as the fuel assemblies, control rod guide tubes, control rod drive (CRD) housings, shroud, chimney, standpipes, and steam separators. Stiffness of light components such as in-core guide tubes and housings, spargers, and their supply headers are not included in the model, but their masses are considered. For the dynamic responses of these components, floor response spectra generated from system analysis is used for subsystem analysis. Mass points are located at all points of interest such as anchors, supports, and points of discontinuity. In addition, mass points are chosen so that the mass distribution in various zones is as uniform as practicable and the full range of frequency of response of interest is adequately represented. The presence of fluid and other structural components introduces a dynamic coupling effect. The hydrodynamic coupling effects caused by horizontal excitation are taken into consideration by including coupling fluid masses lumped to appropriate structural nodes at the same elevation. The details of the hydrodynamic mass derivation are given in Reference 3.7-6. In the vertical excitation, the hydrodynamic coupling effects are assumed to be negligible and the fluid masses are lumped to appropriate structural locations.

Text sections that are bracketed and italicized with an asterisk following the brackets are designated as Tier 2. Prior NRC approval is required to change.

3.7.2.4 Soil-Structure Interaction

[*The seismic soil-structure interaction (SSI) analyses of the Category I buildings performed for a range of soil conditions are presented in Appendix 3A.*]*

Text sections that are bracketed and italicized with an asterisk following the brackets are designated as Tier 2. Prior NRC approval is required to change.

3.7.2.5 Development of Floor Response Spectra

Floor response spectra are developed from the primary structural dynamic analysis using the time history method. A direct spectra generation without resorting to time history in accordance with the method referenced in Reference 3.7-7 or equivalent is an acceptable alternative method.

Seismic floor response spectra for various damping values are generated in three orthogonal directions (two horizontal and one vertical) at various elevations and locations of interest to the design of equipment and piping. When the dynamic analyses are performed separately for each of the three components of the input motion, the resulting co-directional response spectra are combined according to the square root of the sum of the squares (SRSS) method to obtain the combined spectrum in that direction. An alternative approach to obtain co-directional floor response spectra is to perform dynamic analysis with simultaneous input of the three excitation components if those components are statistically independent. Furthermore, when the three components are mutually and statistically independent, response analysis can be performed

individually and the resulting acceleration response time histories in the same direction are added algebraically for floor response spectra generation.

[*In the generation of floor response spectra, the spectrum ordinates are computed at frequency intervals suggested in Table 3.7.1-1 of SRP 3.7.1 plus additional frequencies corresponding to the natural frequencies of the supporting structures. Another acceptable method is to choose a set of frequencies such that each frequency is within 10% of the previous one, and add the natural frequencies of the supporting structures to the set. Alternatively, a set of frequencies such that each frequency is within 5% of the previous one is used.*]*

Text sections that are bracketed and italicized with an asterisk following the brackets are designated as Tier 2. Prior NRC approval is required to change.

3.7.2.6 Three Components of Earthquake Motion

Earthquake motion is three-dimensional and seismic design takes into account the effects of three orthogonal components (two horizontal and one vertical) of the prescribed design earthquake. The applicable methods for combining co-directional responses caused by each of the three components are described below.

[*When the response spectrum method or static coefficient method of analysis is used, the maximum responses caused by each of the three components are combined by taking the SRSS of the maximum co-directional responses caused by each of the three earthquake components at a particular point of the structure or of the mathematical model.*]* The mathematical expression is

$$R_i = \left(\sum_{j=1}^{3} R_{ij}^2 \right)^{1/2} \tag{3.7-9}$$

where

R_{ij} = maximum, co-directional response of interest in direction (i) caused by excitation in direction j (j = 1, 2, 3)

R_i = total combined response of interest in direction (i) obtained by the SRSS rule to account for non-simultaneous occurrence of R_{ij}.

When the time history method of analysis is used and separate analyses are performed for each earthquake component, the total combined response for all three components is obtained using the SRSS method to combine the maximum co-directional responses from each earthquake component. The total response may alternatively be obtained, if the three component motions are mutually statistically independent, by algebraically adding the co-directional responses calculated separately for each component at each time step.

[*When the time history analysis is performed by applying the three component motions simultaneously, the combined response is obtained directly by solution of the equations of motion. This method of combination is applicable only if the three component motions are mutually statistically independent. This method is used for seismic response analysis of primary building structures.*]*

Text sections that are bracketed and italicized with an asterisk following the brackets are designated as Tier 2. Prior NRC approval is required to change.

3.7.2.7 Combination of Modal Responses

This section addresses the applicable methods for the combination of modal responses and the missing mass, when the response spectrum method is used for response analysis.

[*The analysis methods meet the requirements in RG 1.92 Revision 2, 2006, for combining the modal responses and the missing masses, except that for piping analyses, the double sum equation in RG 1.92 Revision 1 is used and the residual rigid response of the missing mass modes is included.*]* The details of the equations from the Regulatory Guide are shown below.

Research since the late 1970s has shown that in the regions of amplified spectral displacement, amplified spectral velocity and amplified spectral acceleration of a spectrum, the periodic responses are dominant. Beyond amplified spectral acceleration Region CD and up to E (Refer to RG 1.92 Rev. 2 for definition of Region CD and up to E), the modal responses consist of both the periodic and rigid components. The periodic modal responses and the periodic components of modal responses are combined using the following double sum ("complete quadratic combination") equation:

$$R_{pI} = \left[\sum_{i=1}^{n} \sum_{j=1}^{n} \varepsilon_{ij} R_{pi} R_{pj} \right]^{1/2} \tag{3.7-10A}$$

where R_{pI} = combined periodic response for the Ith component of seismic input motion (I = 1, 2, 3, for one vertical and two horizontal components), ε_{ij} = the modal correlation coefficient for modes i and j, R_{pi} = periodic response or periodic component of a response of mode i, R_{pj} = periodic response or periodic component of a response of mode j, and n = number of modes considered in the combinations of modal responses.

For completely correlated modes i and j, $\varepsilon_{ij} = 1$; for partially correlated modes i and j, $0 < \varepsilon_{ij} < 1$; for uncorrelated modes i and j, $\varepsilon_{ij} = 0$.

The modal correlation coefficients are uniquely defined, depending on the method chosen for evaluating the correlation, as follows.

Rosenblueth provided the first significant mathematical approach to the evaluation of modal correlation for seismic response spectrum analysis. It is based on the application of random vibration theory, utilizing a finite duration of white noise to represent seismic loading. A formula for calculation of the coefficient ε_{ij} as a function of modal frequencies (f_i, f_j), modal damping ratios (λ_i, λ_j), and the time duration of strong earthquake motion (t_D) was derived as follows:

$$\varepsilon_{ij} = \left[1 + \left(\frac{f'_i - f'_j}{\lambda'_i f_i + \lambda'_j f_j} \right)^2 \right]^{-1} \tag{3.7-10B}$$

where

$$f'_i = f_i\left[1-\lambda_i^2\right]^{1/2}$$

$$\lambda'_i = \lambda_i + \frac{1}{\pi t_D f_i}$$

and f'_j, λ'_j are similarly defined.

The Rosenblueth double sum equation in Equation 3.7-10A, which is accepted by RG 1.92 Revision 2, is different from the double sum equation in RG 1.92 Revision 1. The RG 1.92 Revision 1 equation is as follows:

$$R_{pI} = \left[\sum_{i=1}^{n}\sum_{j=1}^{n}\varepsilon_{ij}\left|R_{pi}R_{pj}\right|\right]^{1/2} \qquad (3.7\text{-}10C)$$

As shown, the absolute value of the responses is used in the RG 1.92 Revision 1 equation, so the product of the responses is always positive. For piping analyses, Equation 3.7-10C is used, rather than Equation 3.7-10A. The RG 1.92 Revision 1 equation used in the piping analyses provides more conservative results than the RG 1.92 Revision 2 equation. The amount of conservatism depends on the critical damping ratio used in the piping analysis. Higher damping ratio will result in more conservatism. See Section 3D.4.1.1 for further details of the PISYS08 piping computer program.

Appendix D to Reference 3.7-17 tabulates numerical values of ε_{ij} for the Rosenblueth formula as a function of frequency, frequency ratio, and strong motion duration time for constant modal damping of 1%, 2%, 5% and 10%. The effect of t_D is most significant at 1% damping and low frequency. For 5% and 10% damping, t_D = 10 sec and 1,000 sec produced similar values for ε_{ij} regardless of frequency. The most significant result is that ε_{ij} is highly dependent on the damping ratio; for 2%, 5% and 10% damping, ε_{ij} = 0.2, 0.5 and 0.8, respectively, at a frequency ratio of 0.9 (modal frequencies within 10%).

For modal combination involving high-frequency modes, the following procedure applies:

Step 1. Determine the modal responses only for those modes with natural frequencies less than that at which the spectral acceleration approximately returns to the ZPA of the input response spectrum (f_{ZPA}). Examples of f_{ZPA} are shown in Figures 1, 2 and 3 of RG 1.92, Rev. 2. Combine such modes in accordance with the methods described above.

When applying these methods to building dynamic loads other than seismic, it is acceptable to use a ZPA cutoff frequency of 100 Hz if the spectral acceleration at 100 Hz has not returned to the ZPA of the response spectrum.

Step 2. For each degree of freedom (DOF) included in the dynamic analysis, determine the fraction of DOF mass included in the summation of all modes included in Step 1. This fraction d_i for each DOF i is given by the following equation:

$$d_i = \sum_{n=1}^{N}\left[\left(c_{n,j}\right)\left(\phi_{n,i}\right)\right] \qquad (3.7\text{-}11)$$

where

n = mode number (*1, 2, ..., N*)

N = the number of modes included in Step 1

$\phi_{n,i}$ = eigenvector value for mode n and DOF i

j = direction of input motion

$c_{n,j}$ = participation factor for mode n in the jth direction:

$$c_{n,j} = \frac{\{\phi_n\}^T [m] \{\delta_{ij}\}}{\{\phi_n\}^T [m] \{\phi_n\}}$$

where δ_{ij} is the Kronecker delta, which is 1 if DOF i is in the direction of the earthquake input motion j and 0 if DOF i is a rotation or not in the direction of the earthquake input motion j. This assumes that the three orthogonal directions of earthquake input motion are coincident with the DOF directions. Also, $[m]$ is the mass matrix.

Next, determine the fraction of DOF mass not included in the summation of these modes:

$$e_i = d_i - \delta_{ij} \tag{3.7-12}$$

Step 3. Higher modes can be assumed to respond in phase with the ZPA and, thus, with each other; hence, these modes are combined algebraically, which is equivalent to pseudostatic response to the inertial forces from these higher modes excited at the ZPA. The pseudostatic inertial forces associated with the summation of all higher modes for each DOF i are given by the following:

$$P_i = (ZPA)(M_i)(e_i) \tag{3.7-13}$$

where P_i is the force or moment to be applied at DOF i, M_i is the mass or mass moment of inertia associated with DOF i.

The structure is then statically analyzed for this set of pseudostatic inertial forces applied to all degrees of freedom to determine the maximum responses associated with high-frequency modes not included in Step 1.

This procedure requires the computation of individual modal responses only for lower-frequency modes. Thus, the more difficult higher-frequency modes need not be determined. The procedure ensures inclusion of all modes of the structural model and proper representation of DOF masses.

Text sections that are bracketed and italicized with an asterisk following the brackets are designated as Tier 2. Prior NRC approval is required to change.

3.7.2.8 Interaction of Non-Category I Structures with Seismic Category I Structures

The interfaces between Seismic Category I and non-Seismic Category I SSCs are designed for the dynamic loads and displacements produced by both the Category I and non-Category I SSCs. All non-Category I SSCs meet at least one of the following requirements:

(1) The collapse of any non-Category I structure, system or component does not cause the non-Category I structure, system or component to strike a Seismic Category I SSCs. SSCs in this category are classified as Seismic Category NS. Any Seismic Category NS structure postulated to fail under SSE is located at least a distance of its height above grade from Seismic Category I structures.

(2) The collapse of any non-Category I SSCs does not impair the integrity of Seismic Category I SSCs. This is demonstrated by showing that the impact loads on the Category I structure, system or component resulting from collapse of an adjacent non-Category I structure, because of its size and mass, are either negligible or smaller than those considered in the design (e.g., loads associated with tornado, including missiles). SSCs in this category are classified as Seismic Category NS.

(3) The non-Category I structures, systems or components are analyzed and designed to prevent their failure under SSE conditions in a manner such that the margin of safety of these structures, systems or components is equivalent to that of Seismic Category I structures, systems or components. SSCs in this category are classified as Seismic Category II, except the Radwaste Building.

The following subsections describe the seismic analysis methodology and design acceptance criteria for the Radwaste Building and Seismic Category II Buildings to preclude any adverse interaction with Seismic Category I structures.

3.7.2.8.1 Turbine Building

[*The Turbine Building is a Seismic Category II structure that is adjacent to the Reactor Building. The method of analysis of the Turbine Building is the same as a Seismic Category I structure including the loading cases and acceptance criteria as shown in Tables 3.8-15 and 3.8-16. The mathematical model of the structural systems for seismic analysis is either a stick model or a finite element model using the procedures in accordance with Subsection 3.7.2.3. The soil-structure interaction (SSI) analysis is performed using the soil spring/dashpot approach or the finite element approach in accordance with Appendix 3A. The generic uniform site properties are shown in Table 3A.3-1 and the layered site properties are shown in Table 3A.3-3. The effect of structure-soil-structure interaction with adjacent Seismic Category I structures is performed in the same manner as described in Subsection 3A.8.11. Seismic input motions are based on the single envelope design response spectra as defined in Table 3.7-2 with the applicable scale factor applied at the foundation level, at the bottom of the base slab.*

The Turbine Building location is shown in Figure 1.1-1. The building height is shown in Figure 1.2-19. The seismic gaps between the Turbine Building and the Reactor Building are no less than the calculated maximum relative displacements between the two buildings during SSE event, considering out-of-phase motion.]*

Text sections that are bracketed and italicized with an asterisk following the brackets are designated as Tier 2. Prior NRC approval is required to change.

3.7.2.8.2 Radwaste Building

[*The RW is designed in accordance with RG 1.143 Classification RW-IIa. The earthquake loading for the RW is full SSE instead of 1/2 SSE as shown in RG 1.143. Systems, structures and components classified as RW-IIa that are housed within the RW are designed to 1/2 SSE.*

Analysis of the RW is performed in the same manner as a Seismic Category I structure including the loading cases and acceptance criteria as shown in Tables 3.8-15 and 3.8-16. The mathematical model of the structural systems for seismic analysis is either a stick model or a finite element model using the procedures of Subsection 3.7.2.3. The SSI analysis is performed using the soil spring/dashpot approach or the finite element approach in accordance with Appendix 3A. The generic uniform site properties are shown in Table 3A.3-1 and the layered site properties are shown in Table 3A.3-3. The effect of structure-soil-structure interaction with adjacent Seismic Category I structures is performed in the same manner as described in Subsection 3A.8.11. Seismic input motions are based on the single envelope design response spectra as defined in Table 3.7-2 with the applicable scale factor, applied at the foundation level, at the bottom of the base slab.

The RW location is shown in Figure 1.1-1. It is located at least 10 meters from the RW. The building height is shown in Figure 1.2-25.]*

Text sections that are bracketed and italicized with an asterisk following the brackets are designated as Tier 2. Prior NRC approval is required to change.

3.7.2.8.3 Service Building

[*The Service Building is a Seismic Category II structure that is adjacent to the Reactor Building and the Fuel Building. The method of analysis of the Service Building is the same as a Seismic Category I structure including the loading cases and acceptance criteria as shown in Tables 3.8-15 and 3.8-16. The mathematical model of the structural systems for seismic analysis is either a stick model or a finite element model using the procedures of Subsection 3.7.2.3. The SSI analysis is performed using the soil spring/dashpot approach or the finite element approach in accordance with Appendix 3A. The generic uniform site properties are shown in Table 3A.3-1 and the layered site properties are shown in Table 3A.3-3. The effect of structure-soil-structure interaction with adjacent Seismic Category I structures is performed in the same manner as described in Subsection 3A.8.11. Seismic input motions are based on the single envelope design response spectra as defined in Table 3.7-2 with the applicable scale factor, applied at the foundation level, at the bottom of the base slab.*

The Service Building location is shown in Figure 1.1-1. The seismic gaps between the Service Building and the Reactor/Fuel Building are no less than the calculated maximum relative displacements between the two buildings during an SSE event, considering out-of-phase motion.]*

Text sections that are bracketed and italicized with an asterisk following the brackets are designated as Tier 2. Prior NRC approval is required to change.

3.7.2.8.4 Ancillary Diesel Building

[*The Ancillary Diesel Building is a Seismic Category II structure. It houses the Ancillary Diesel Generators that are classified as Criterion B under the Regulatory Treatment of Non-Safety*

Systems (see Section 19A). The method of analysis of the Ancillary Diesel Building is the same as a Seismic Category I structure including the loading cases and acceptance criteria as shown in Tables 3.8-15 and 3.8-16. The mathematical model of the structural systems for seismic analysis is either a stick model or a finite element model using the procedures of Subsection 3.7.2.3. The soil-structure interaction (SSI) analysis is performed using the soil spring/dashpot approach or the finite element approach in accordance with Appendix 3A. The generic uniform site properties are shown in Table 3A.3-1 and the layered site properties are shown in Table 3A.3-3. The effect of structure-soil-structure interaction with adjacent Seismic Category I structures is performed in the same manner as described in Subsection 3A.8.11. Seismic input motions are based on the single envelope design response spectra as defined in Table 3.7-2 with the applicable scale factor applied at the foundation level, bottom of the base slab.

The Ancillary Diesel Building location is shown in Figure 1.1-1. It is located at least 15.2 meters from the Fuel Building.]*

Text sections that are bracketed and italicized with an asterisk following the brackets are designated as Tier 2. Prior NRC approval is required to change.

3.7.2.9 Effects of Parameter Variations on Floor Response Spectra

[*Floor response spectra calculated according to the procedures described in Subsection 3.7.2.5 are peak broadened by ±15% to account for uncertainties in the structural frequencies owing to uncertainties in the material properties of the structure and soil and to approximations in the modeling techniques used in the analysis.*

When, in lieu of response spectrum analysis, the calculated floor acceleration time history is used to perform a time history analysis of piping and equipment, uncertainties are accounted for by expanding and shrinking the floor acceleration time history within 1/(1±0.15) so as to change the frequency content of the time history by ±15%. In this case, multiple time history analyses are performed. Alternatively, a single synthetic time history, which matches the broadened floor response spectra, may be used.]*

The methods described above to account for the effect of parameter variation are applicable to seismic and other building dynamic loads.

Text sections that are bracketed and italicized with an asterisk following the brackets are designated as Tier 2. Prior NRC approval is required to change.

3.7.2.10 Use of Equivalent Vertical Static Factors

Equivalent vertical static factors are used when the requirements for the static coefficient method in Subsection 3.7.2.1.3 are satisfied. [*All Seismic Category I structures are dynamically analyzed in the vertical direction. No constant static factors are utilized.*]*

Text sections that are bracketed and italicized with an asterisk following the brackets are designated as Tier 2. Prior NRC approval is required to change.

3.7.2.11 Methods Used to Account for Torsional Effects

One method of treating the torsional effects in the dynamic analysis is to carry out a dynamic analysis that incorporates the torsional degrees of freedom. For structures having negligible coupling of lateral and torsional motions, a two-dimensional model without the torsional degrees of freedom can be used for the dynamic analysis and the torsional effects are accounted for in the following manner. The locations of the center of mass are calculated for each floor. The center of rigidity and torsional stiffness are determined for each story. Torsional effects are introduced in each story by applying a torsional moment about its center of rigidity. The torsional moment is calculated as the sum of the products of the inertial force applied at the center of mass of each floor above, and a moment arm equal to the distance from the center of mass of the floor to the center of rigidity of the story, plus 5% of the maximum building dimension at the level under consideration. To be conservative, the absolute values of the moments are used in the sum. The torsional moment and story shear are distributed to the resisting structural elements in proportion to each individual stiffness.

[*The seismic analysis for primary building structures is performed using a three-dimensional model including the torsional degrees of freedom.*]*

Text sections that are bracketed and italicized with an asterisk following the brackets are designated as Tier 2. Prior NRC approval is required to change.

3.7.2.12 Comparison of Responses

Since only the time history method is used for the dynamic analysis of Seismic Category I structures, a comparison of responses with the response spectrum method is not necessary.

3.7.2.13 Analysis Procedure for Damping

[*When the modal superposition method of analysis (either time history or response spectrum) is used for models that consist of elements with different damping properties, the composite modal damping ratio can be obtained either as stiffness-weighted:*

$$\lambda_k = \frac{\{\phi\}^T[\bar{K}]\{\phi\}}{K^*} \qquad (3.7\text{-}14)$$

or as mass-weighted:

$$\lambda_k = \{\phi\}^T[\bar{M}]\{\phi\} \qquad (3.7\text{-}15)$$

where:

λ_k = *equivalent modal damping for the k-th mode*

K^* = $\{\phi\}^T [K] \{\phi\}$

$[K]$ = *assembled stiffness matrix*

$[\bar{K}], [\bar{M}]$ = *modified stiffness or mass matrix constructed from element matrices formed by the product of the damping ratio for the element and its stiffness or mass matrix*

{ϕ} = *k-th normalized modal vector.*

The composite modal damping calculated by either Equation 3.7-14 or 3.7-15 is limited to 20%. For models that take SSI into account by the lumped soil spring approach, the method defined by Equation 3.7-14 is acceptable. For fixed base model, either Equation 3.7-14 or 3.7-15 is used.

In the seismic response analysis of primary building structures described in Appendix 3A using the complex response method in the frequency domain, material damping is included in the formulation of the complex stiffness matrix:

$$[k_j^*] = [k_j](1 + 2i\lambda_j) \qquad (3.7\text{-}16)$$

where

$[k_j^*]$ = *complex stiffness matrix of element j*

$[k_j]$ = *stiffness matrix of element j*

λ_j = *material damping ratio of element j*

i = $\sqrt{-1}$.

In the seismic response analysis of primary building structures described in Appendix 3A using the time history method solved by direct integration, the damping matrix is formed by the following procedure:

(1) First, the stiffness-weighted modal damping λ_k is calculated in accordance with Equation 3.7-14

(2) The damping matrix that fits the relationships between the frequencies and modal damping constants above can be calculated using the following formula. (Reference 3.7-9)

$$[C] = [M][\Phi][\Lambda][\Phi]^T[M] \qquad (3.7\text{-}17)$$

where,

$[M]$: *mass matrix*

$[\Phi]$: *undamped characteristic mode matrix*

$$[\Lambda]: \begin{bmatrix} \Lambda_1 & & & & \\ & \ddots & & & \\ & & \Lambda_k & & \\ & & & \ddots & \\ & & & & \Lambda_n \end{bmatrix}$$

$$\Lambda_k = \frac{2\lambda_k\omega_k}{m_k}$$

λ_k: *k-th damping constant*

ω_k: *k-th undamped circular frequency*

m_k: *k-th equivalent mass*

n: maximum mode number

In the dynamic response analysis of containment loads described in Appendix 3F using the direct integration time history method, the damping matrix is formed by a linear combination of the mass and stiffness matrices,

$$[C] = \alpha[M] + \beta[K] \qquad (3.7\text{-}18)$$

where α and β are constants. They are determined to give the required damping value as a function of the circular frequency ω, i.e.,

$$\lambda = \frac{\alpha}{2\omega} + \frac{\beta\omega}{2} \qquad (3.7\text{-}19)]^*$$

Text sections that are bracketed and italicized with an asterisk following the brackets are designated as Tier 2. Prior NRC approval is required to change.

3.7.2.14 Determination of Seismic Category I Structure Overturning Moments

[*When the combined effect of earthquake ground motion and structural response is strong enough, the structure undergoes a rocking motion pivoting about either edge of the base. When the amplitude of rocking motion becomes so large that the center of structural mass reaches a position right above either edge of the base, the structure becomes unstable and may tip over. The mechanism of the rocking motion is like an inverted pendulum and its natural period is long compared with the linear, elastic structural response. Thus, with regard to overturning, the structure can be treated as a rigid body.*

The maximum kinetic energy (E_s) can be conservatively estimated to be:

$$E_s = \frac{1}{2}\sum_i m_i[(V_h)_i^2 + (V_v)_i^2] \qquad (3.7\text{-}20)$$

where $(V_h)_i$ and $(V_v)_i$ are the maximum values of the total lateral velocity and total vertical velocity, respectively, of mass m_i, and are computed as follows:

$$|(V_h)_i| = |(V_x)_i| + |(V_h)_g|$$
$$|(V_v)_i| = |(V_z)_i| + |(V_v)_g| \qquad (3.7\text{-}21)$$

where $(V_h)_g$ and $(V_v)_g$ are the peak horizontal and vertical ground velocity, respectively, and $(V_x)_i$ and $(V_z)_i$ are the maximum values of the relative lateral and vertical velocity of mass m_i.

Letting m_o be the total mass of the structure and basemat, the potential energy required to overturn the structure is equal to:

$$E_o = m_o g h + W_p - W_b \qquad (3.7\text{-}22)$$

where h is the height to which the center of mass of the structure must be lifted to reach the overturning position, g is the gravity constant, and W_p and W_b are the energy components caused by the effects of embedment and buoyancy, respectively. Because the structure may not be a symmetrical one, the value of h is computed with respect to the edge that is nearer to the center

of mass. The structure is defined stable against overturning when the ratio of E_o to E_s is no less than 1.1 for the SSE in combination with other appropriate loads.]*

Text sections that are bracketed and italicized with an asterisk following the brackets are designated as Tier 2. Prior NRC approval is required to change.

3.7.3 Seismic Subsystem Analysis

This section applies to Seismic Category I and Seismic Category II subsystems (equipment and piping) that are qualified to satisfy the performance requirements according to their Seismic Category I or Seismic Category II designation. Input motions for the qualification are usually in the form of floor response spectra and displacements obtained from the primary system dynamic analysis. Input motions in terms of acceleration time histories are used when needed. Dynamic qualification can be performed by analysis, testing, or a combination of both, or by the use of experience data. This section addresses the aspects related to analysis only.

3.7.3.1 Seismic Analysis Methods

[*The methods of analysis described in Subsection 3.7.2.1 are equally applicable to equipment and piping systems*.]* Among the various dynamic analysis methods, the response spectrum method is used most often. For multi-supported systems analyzed by the response spectrum method, the input motions can be either the envelope spectrum with USM of all support points or the ISM at each support. Additional considerations associated with the ISM response spectrum method of analysis are given in Subsection 3.7.3.9. For equipment analysis, refer to the requirements of Step 1 of Subsection 3.7.2.7 for ZPA cutoff frequency determination.

Text sections that are bracketed and italicized with an asterisk following the brackets are designated as Tier 2. Prior NRC approval is required to change.

3.7.3.2 Determination of Number of Earthquake Cycles

[*The SSE is the only design earthquake considered for the ESBWR Standard Plant. To account for the cyclic effects of the more frequent occurrences of lesser earthquakes and their aftershocks, the fatigue evaluation for ASME B&PV Code Class 1, 2, and 3 components and core support structures takes into consideration two SSE events with 10 peak stress cycles per event for a total of 20 full cycles of the peak SSE stress. This is equivalent to the cyclic load basis of one SSE and five OBE events as currently recommended in SRP 3.7.3. Alternatively, a number of fractional vibratory cycles equivalent to 20 full SSE vibratory cycles is used (with an amplitude not less than one-third of the maximum SSE amplitude) when derived in accordance with Appendix D of IEEE-344.*

For equipment seismic qualification performed in accordance with IEEE-344 as endorsed by RG 1.100, the equivalent seismic cyclic loads are five 0.5 SSE events followed by one full SSE event. Alternatively, a number of fractional peak cycles equivalent to the maximum peak cycles for five 0.5 SSE events is used in accordance with Appendix D of IEEE-344 when followed by one full SSE.]*

* Text sections that are bracketed and italicized with an asterisk following the brackets are designated as Tier 2*. Prior NRC approval is required to change.

3.7.3.3 Procedures Used for Analytical Modeling

The mathematical modeling of equipment and piping is developed according to the finite element technique following the basic modeling procedures described in Subsection 3.7.2.3 for primary systems.

3.7.3.3.1 Piping Systems

Mathematical models for Seismic Category 1 piping systems are constructed to reflect the dynamic characteristics of the system. The continuous system is modeled as an assemblage of pipe elements (straight sections, elbows, and bends) supported by hangers and anchors, and restrained by pipe guides, struts and snubbers. Pipe and hydrodynamic fluid masses are lumped at the nodes and connected by zero-mass elastic elements, which reflect the physical properties of the corresponding piping segment. The mass node points are selected to coincide with the locations of large masses, such as valves, pumps, and motors, and with locations of significant geometry change. All concentrated weights on the piping systems, such as the valves, pumps, and motors, are modeled as lumped mass rigid systems if their fundamental frequencies are greater than the cutoff frequency in Subsection 3.7.2.1.1. On straight runs, mass points are located at spacing no greater than the span which would have a fundamental frequency equal to the cutoff frequency stipulated in Subsection 3.7.2.1.1, when calculated as a simply supported beam with uniformly distributed mass. The torsional effects of valve operators and other equipment with offset center of gravity with respect to the piping center line are included in the analytical model. Furthermore, all pipe guides and snubbers are modeled so as to produce representative stiffness. The equivalent linear stiffness of the snubbers is based on certified test results provided by the vendor.

Pipe supports are designed and qualified to satisfy stiffness values used in the piping analysis. For struts and snubbers, the stiffness to consider is the combined stiffness of strut, snubber, pipe clamp and piping support steel.

In general, pipe support component weights, which are directly attached to a pipe such as a clamp, strut, snubber, and trapeze, are considered in the piping analysis. Frame type supports are designed to carry their own mass and are subjected to deflection requirements. [*A maximum deflection of 1.6 mm (1/16 in.) is used for normal operating conditions, and 3.2 mm (1/8 in.) is used for abnormal conditions. For other types of supports, either it must be demonstrated that the support is dynamically rigid, or it must be demonstrated that one-half of the support mass is less than 10% of the mass of the straight pipe segment of the span at the support location, to preclude amplification. Otherwise, the contribution of the support weight amplification is added into the piping analysis. Piping supports are evaluated to include the impact of self-weight excitation on support structure and anchorage in detail along with piping analyzed loads where this effect is significant.*]*

The stiffness of the building steel/structure (i.e., beyond the NF jurisdictional boundary) is not considered in pipe support overall stiffness. Response spectra input to the piping system includes flexibility of the building structure. When attachment to a major building structure is not possible, any intermediate structures are included in the analysis of the pipe support.

Text sections that are bracketed and italicized with an asterisk following the brackets are designated as Tier 2. Prior NRC approval is required to change.

3.7.3.3.2 Equipment

For dynamic analysis, equipment is represented by a lumped-mass system, which consists of discrete masses connected by zero-mass elements. The criteria used to lump masses are as follows:

- The number of modes of a dynamic system is controlled by the number of masses used; therefore, the number of masses is chosen so that all significant modes are included. The number of masses or dynamic degrees of freedom is considered adequate when additional degrees of freedom do not result in more than a 10% increase in response. Alternatively, the number of dynamic degrees of freedom is no less than twice the number of modes below the cutoff frequency of Subsection 3.7.2.1.1.
- Mass is lumped at any point where a significant concentrated weight is located. Examples are the motor in the analysis of a pump stand, and the impeller in the analysis of a pump shaft.
- If the equipment has free-end overhang span whose flexibility is significant compared to the center span, a mass is lumped at the overhang span.
- [*When equipment is concentrated between two existing nodes located between two supports in a finite element model, a new node is created at that location. Alternatively, the equipment mass can be concentrated at the nearest node to either side which tends to shift the natural frequency to the higher amplification region of the input motion response spectrum. When the approximate location of the equipment mass is shifted toward the mid-span between the supports the natural frequency is lowered and when the approximate location is shifted toward either support the natural frequency is increased. Moving the natural frequencies of the equipment into the higher amplification region of the excitation thereby conservatively increases the equipment response level.*

  Similarly, in the case of live loads (mobile) and variable support stiffness, the location of the load and the magnitude of the support stiffness are chosen to lower the system natural frequencies. Similar to the above discussion, this ensures conservative dynamic responses because the lowered equipment frequencies tend to be shifted to the higher amplification range of the input motion spectra. If not, the model is adjusted to give more conservative responses.]*

Text sections that are bracketed and italicized with an asterisk following the brackets are designated as Tier 2. Prior NRC approval is required to change.

3.7.3.3.3 Modeling of Special Engineered Pipe Supports

[*Special engineered pipe supports are not used.*]*

Text sections that are bracketed and italicized with an asterisk following the brackets are designated as Tier 2. Prior NRC approval is required to change.

3.7.3.4 Basis for Selection of Frequencies

Where practical, in order to avoid adverse resonance effects, equipment and components are designed/selected such that their fundamental frequencies are less than half or more than twice the dominant frequencies of the support structure. Moreover, in any case, the equipment is

analyzed or tested or both to demonstrate that it is adequately designed for the applicable loads considering both its fundamental frequency and the forcing frequency of the applicable support structure.

3.7.3.5 Analysis Procedure for Damping

[*Damping values for equipment and piping are shown in Table 3.7-1 and are consistent with RG 1.61, Revision 1.*]* For ASME B&PV Code, Section III, Division 1 Class 1, 2, and 3, and ASME B31.1 piping systems, alternative damping values specified in Figure 3.7-37 are used. For systems made of subsystems with different damping properties, the analysis procedures described in Subsection 3.7.2.13 are applicable.

* Text sections that are bracketed and italicized with an asterisk following the brackets are designated as Tier 2*. Prior NRC approval is required to change.

3.7.3.6 Three Components of Earthquake Motion

[*The applicable methods of spatial combination of responses due to each of the three input motion components are described in Subsection 3.7.2.6.*]*

Text sections that are bracketed and italicized with an asterisk following the brackets are designated as Tier 2. Prior NRC approval is required to change.

3.7.3.7 Combination of Modal Responses

[*The applicable methods of modal response combination are described in Subsection 3.7.2.7.*]*

Text sections that are bracketed and italicized with an asterisk following the brackets are designated as Tier 2. Prior NRC approval is required to change.

3.7.3.8 Interaction of Other Systems with Seismic Category I Systems

Each non-Category I (i.e., Seismic Category II or non-seismic) system is designed to be isolated from any Seismic Category I system by either a constraint or barrier, or is remotely located with regard to the Seismic Category I system. [*If it is not feasible or practical to isolate the Seismic Category I system, adjacent non-Category I systems are analyzed according to the same seismic criteria as applicable to the Seismic Category I systems. For non-Category I systems attached to Seismic Category I systems, the dynamic effects of the non-Category I systems are simulated in the modeling of the Seismic Category I system.*]* The attached non-Category I systems, up to the first anchor beyond the interface, are also designed in such a manner that during an earthquake of SSE intensity it does not cause a failure of the Seismic Category I system.

Text sections that are bracketed and italicized with an asterisk following the brackets are designated as Tier 2. Prior NRC approval is required to change.

3.7.3.9 Multiple-Supported Equipment and Components with Distinct Inputs

For multi-supported systems (equipment and piping) analyzed by the response spectrum method for the determination of inertial responses, either of the following two input motions are acceptable:

- Envelope response spectrum with USM applied at all support points for each orthogonal direction of excitation; or
- ISM response spectrum at each support for each orthogonal direction of excitation.

When the ISM response spectrum method of analysis (Subsection 3.7.2.1.2) is used, a support group is defined by supports that have the same time-history input. This usually means all supports located on the same floor, or portions of a floor, of a structure. The highest response spectrum for any support in a given group is used as input for the entire support group. This approach is appropriate since the time histories for supports within each group are time phase correlated. In most cases, the support at the highest elevation has the highest response spectrum and is used for the group. For piping inside the RCCV, the responses caused by motions of supports in two groups are combined by the SRSS procedure since it has been demonstrated that the phases for the independent support motions are sufficiently uncorrelated, and the analysis results for two typical piping systems (main steam and feedwater) using the SRSS procedure are more conservative than the time history analysis method when a 10 percent margin is applied to the SRSS results. In most cases, the number of support groups can be restricted to two ISM groups (RPV and inside RCCV), but in piping analysis cases where additional support motion groups are used within the RCCV, the absolute sum procedure for an ISM analysis shall be used. For piping outside the RCCV, the absolute sum procedure for an ISM analysis shall be used.

[*To use the SRSS method for independent support response spectrum analysis, it is required to include 10 percent margin in the design requirements for piping stress and piping support loads to address the uncertainties that may exist from the use of the SRSS method rather than the absolute sum method for the group combination method when performing an ISM analysis.*]*

In addition to the inertial response discussed above, the effects of relative support displacements are considered. The maximum relative support displacements are obtained from the dynamic analysis of the building, or as a conservative approximation, by using the floor response spectra. For the latter option, the maximum displacement of each support is predicted by $S_d = S_a g/\omega^2$, where S_a is the spectral acceleration in "g's" at the high-frequency end of the spectrum curve (which, in turn, is equal to the maximum floor acceleration), g is the gravity constant, and ω is the fundamental frequency of the primary support structure in radians per second. The support displacements are imposed on the supported systems in a conservative (i.e., most unfavorable combination) manner and static analysis is performed for each orthogonal direction. The resulting responses are combined with the inertia effects by the SRSS method. Because the OBE design is not required, the displacement-induced SSE stresses due to seismic anchor motion are included in Service Level D load combinations.

In place of the response spectrum analysis, the ISM time history method of analysis is used for multi-supported systems subjected to distinct support motions, in which case both inertial and relative displacement effects are already included.

* Text sections that are bracketed and italicized with an asterisk following the brackets are designated as Tier 2*. Prior NRC approval is required to change.

3.7.3.10 Use of Equivalent Vertical Static Factors

[*Equivalent vertical static factors are used when the requirements for the static coefficient method in Subsection 3.7.2.1.3 are satisfied.*]*

Text sections that are bracketed and italicized with an asterisk following the brackets are designated as Tier 2. Prior NRC approval is required to change.

3.7.3.11 Torsional Effects of Eccentric Masses

[*Torsional effects of eccentric masses are included for subsystems similar to that for the piping systems discussed in Subsection 3.7.3.3.1.*]*

Text sections that are bracketed and italicized with an asterisk following the brackets are designated as Tier 2. Prior NRC approval is required to change.

3.7.3.12 Effect of Differential Building Movements

In most cases, subsystems are anchored and restrained to floors and walls of buildings that may have differential movements during a seismic event. The movements may range from insignificant differential displacements between rigid walls of a common building at low elevations to relatively large displacements between separate buildings at a high seismic activity site.

Differential endpoint or restraint deflections cause forces and moments to be induced in the system. The stress thus produced is a secondary stress. It is justifiable to place this stress, which results from restraint of free-end displacement of the system, in the secondary stress category because the stresses are self-limiting and, when the stresses exceed yield strength, minor distortions or deformations within the system satisfy the condition which caused the stress to occur.

[*When the piping analysis is performed using USM analysis, per SRP Section 3.9.2, the absolute sum method is used to combine the inertia results and the seismic anchor motion results for both piping and piping support design.*

When the piping analysis is performed by ISM, the piping stresses and pipe support loads are increased by 10% when using the SRSS group combination method. With the additional 10% added to the piping stresses and the pipe support loads, the inertia and the seismic anchor motion are combined by SRSS for piping stresses and pipe support loads.]*

Text sections that are bracketed and italicized with an asterisk following the brackets are designated as Tier 2. Prior NRC approval is required to change.

3.7.3.13 Seismic Category I Buried Piping, Conduits and Tunnels

[*All Seismic Category I utilities (i.e. piping, conduits, or auxiliary system components), that are routed underground are installed in concrete trenches/tunnels or in concrete duct banks in direct contact with soil.*

Fire Protection System yard piping with a Seismic Category I classification is installed in reinforced concrete tunnels and covered concrete trenches near the ground surface with removable covers to facilitate maintenance and inspection access.

There are Seismic Category I conduits in four electrical duct banks from the CB to the RB. The electrical conduit are embedded in reinforced concrete duct bank in direct contact with soil.

The access tunnel, which includes walkways between and access to the RB, CB, TB, SB, and Electrical Building, is classified Seismic Category II. Since Seismic Category II structures are

designed to the same criteria as Seismic Category I structures there is no impact to adjacent Seismic Category I structures.

The Radwaste Tunnel provides for pipes that transport radioactive waste to the Radwaste Building from the RB and TB. The radwaste tunnel is classified non-seismic but the structural acceptance criteria are in accordance with RG 1.143 – Safety Class RW-IIa.

In accordance with SRP 3.7.3 (Rev. 3, March 2007), the following items are considered in the analysis and design of trenches/tunnels or concrete duct banks for Seismic Category I utilities and buried Seismic Category II and radwaste tunnels (RG 1.143 – use 1/2 SSE):

- *Two types of ground shaking-induced loadings are considered for design:*
  - *Relative deformations imposed by seismic waves traveling through the surrounding soil or by differential deformations between the soil and anchor points.*
  - *Lateral earthquake pressures and groundwater effects acting on structures.*
- *When applicable, the effects caused by local soil settlements, soil arching, etc., are considered in the analysis.*
- *Lateral earth pressures are determined in the same manner as for embedded walls below grade for Seismic Category I structures. The effect of wave propagation is accounted for in accordance with ASCE 4-98, Subsection 3.5.2 and Commentary.*
- *Longitudinal forces and strains are treated as secondary forces and strains (displacement-controlled).*
- *Longitudinal compressive strains are limited to 0.3%. The reinforcing steel added to the concrete addresses the effect of longitudinal tensile strains. Member forces are calculated per ASCE 4-98 methodology and section capacities are determined per ACI 349-01. Steel section properties are determined per AISC N690-94.*
- *Seismic input motions are based on the single envelope design response spectra as defined in Table 3.7-2 using the applicable scale factor.*
- *Primary loadings are lateral earth pressures, hydrostatic pressures, dead loads, and live loads applied concurrently with seismic excitation. Resultant stresses due to wave propagation effects and those resulting from the dynamic anchor movement are combined by the SRSS method.*
- *Expansion joints are provided between the tunnel and the connecting building to provide seismic isolation.*
- *Expansion joints along the tunnel are placed no more than 20 m (65.6 ft.) apart.*

Seismic Category I utilities and Safety Class RW-IIa radwaste piping installed in trenches or tunnels are analyzed in accordance with the standard requirements of Subsection 3.7.3. Seismic input motions for the portions located below ground are based on the single envelope design response spectra as defined in Table 3.7-2 using applicable scale factors.]*

Text sections that are bracketed and italicized with an asterisk following the brackets are designated as Tier 2. Prior NRC approval is required to change.

3.7.3.14 Methods for Seismic Analysis of Seismic Category I Concrete Dams

[*There are no Seismic Category I concrete dams in the ESBWR design.*]*

Text sections that are bracketed and italicized with an asterisk following the brackets are designated as Tier 2. Prior NRC approval is required to change.

3.7.3.15 Methods for Seismic Analysis of Above-Ground Tanks

[*The seismic analysis of Seismic Category I above-ground tanks considers the following items:*

- *At least two horizontal modes of combined fluid-tank vibration and at least one vertical mode of fluid vibration are included in the analysis. The horizontal response analysis includes at least one impulsive mode in which the responses of the tank shell and roof are coupled together with the portion of the fluid contents that move in unison with the shell, and the fundamental sloshing (convective) mode.*
- *The fundamental natural horizontal impulsive mode of vibration of the fluid-tank system is estimated giving due consideration to the flexibility of the supporting medium and to any uplifting tendencies for the tank. The rigid tank assumption is not made unless it can be justified. The horizontal impulsive-mode spectral acceleration, S_{a1}, is then determined using this frequency and damping value for the impulsive mode. This is the same as that for the tank shell material in accordance with NUREG/CR-1161 (Reference 3.7-19). Alternatively, the maximum spectral acceleration corresponding to the relevant damping is used.*
- *Damping values used to determine the spectral acceleration in the impulsive mode are based upon the system damping associated with the tank shell material as well as with the SSI. The SSI system damping takes into account soil damping in the form of stiffness-weighted damping in accordance with Equation 3.7-14 or the complex stiffness matrix in accordance with Equation 3.7-16.*
- *In determining the spectral acceleration in the horizontal convective mode, S_{a2}, the fluid damping ratio is 0.5% of critical damping unless a higher value can be substantiated by experimental results.*
- *The maximum overturning moment, M_o, at the base of the tank is obtained by the modal and spatial combination methods discussed in Subsections 3.7.2.7 and 3.7.2.6, respectively. The uplift tension resulting from M_o is resisted either by tying the tank to the foundation with anchor bolts, etc., or by mobilizing enough fluid weight on a thickened base skirt plate. The latter method of resisting M_o, when used, must be shown to be conservative.*
- *The seismically induced hydrodynamic pressures on the tank shell at any level are determined by the modal and spatial combination methods discussed in Subsections 3.7.2.7 and 3.7.2.6, respectively. The maximum hoop forces in the tank wall are evaluated with due regard for the contribution of the vertical component of ground shaking. If the effects of SSI results in higher response, then an appropriate SSI method of analysis comparable to Reference 3.7-16 is used. The hydrodynamic pressure at any level is added to the hydrostatic pressure at that level to determine the hoop tension in the tank shell.*

- *Either the tank top head is located at an elevation higher than the slosh height above the top of the fluid or else is designed for pressures resulting from fluid sloshing against this head.*
- *At the point of attachment, the tank shell is designed to withstand the seismic forces imposed by the attached piping. An appropriate analysis is performed to verify this design.*
- *The tank foundation is designed to accommodate the seismic forces imposed on it. These forces include the hydrodynamic fluid pressures imposed on the base of the tank as well as the tank shell longitudinal compressive and tensile forces resulting from M_o.*
- *In addition to the above, a consideration is given to prevent buckling of tank walls and roof, failure of connecting piping, and sliding of the tank.*

The seismic SSI analysis of the Firewater Storage Tanks is described in Appendix 3A.]*

Text sections that are bracketed and italicized with an asterisk following the brackets are designated as Tier 2. Prior NRC approval is required to change.

3.7.3.16 Design of Small Branch and Small Bore Piping

(1) Small branch lines are defined as those lines that can be decoupled from the analytical model used for the analysis of the main run piping to which the branch lines attach. [*Branch lines can be decoupled when the ratio of run to branch pipe moment of inertia is 25 to 1, or greater.*]* In addition to the moment of inertia criterion for acceptable decoupling, these small branch lines are designed with no concentrated masses, such as valves, in the first one-half span length from the main run pipe; and with sufficient flexibility to prevent restraint of movement of the main run pipe. Due to branch decoupling, the thermal displacements at the run pipe are combined with associated pressures and temperatures for the flexibility analyses of the branch pipe. All the stresses must meet the ASME B&PV Code requirements. The branch pipe analysis results ensure adequate flexibility and proper design of all the restraints on the branch pipe.

(2) For small bore piping defined as piping 50 mm (2 in.) and less nominal pipe size, and small branch lines 50 mm (2 in.) and less nominal pipe size, as defined in (1) above, it is acceptable to use small bore piping handbooks in lieu of performing a system flexibility analysis, using static and dynamic mathematical models, to obtain loads on the piping elements and using these loads to calculate stresses per equations in NB, NC, and ND-3600 in ASME B&PV Code Section III and ASME B31.1 Code, whenever the following are met:

a. When the small bore piping handbook is serving the purpose of the design report it meets all of the ASME B&PV Code requirements for a piping design report. This includes the piping and its supports.

b. Formal documentation exists showing piping designed and installed to the small bore piping handbook (1) is conservative in comparison to results from a detail stress analysis for all applied loads and load combinations using static and dynamic analysis methods defined in Subsection 3.7.3, (2) does not result in piping that is less reliable

because of loss of flexibility or because of excessive number of supports, (3) satisfies required clearances around sensitive components.

The small bore piping handbook methodology is not applied when specific information is needed on (a) magnitude of pipe and fitting stresses, (b) pipe and fitting cumulative usage factors, (c) accelerations of pipe-mounted equipment, or locations of postulated breaks and leaks.

The small bore piping handbook methodology is not applied to piping systems that are fully engineered and installed in accordance with the engineering drawings.

Text sections that are bracketed and italicized with an asterisk following the brackets are designated as Tier 2. Prior NRC approval is required to change.

3.7.3.17 Interaction of Other Piping with Seismic Category I Piping

In certain instances, Seismic Category II piping is connected to Seismic Category I piping at locations other than a piece of equipment which, for purposes of analysis, could be represented as an anchor. The transition points typically occur at Seismic Category I valves, which may or may not be physically anchored. Because a dynamic analysis must be modeled from pipe anchor point to anchor point, two options exist:

(1) Specify and design a structural anchor at the Seismic Category I valve and analyze the Seismic Category I subsystem.

(2) Analyze the subsystem from the anchor point in the Seismic Category I subsystem through the valve to either the first anchor point in the Seismic Category II subsystem; or for a distance such that there are at least two seismic restraints in each of the three orthogonal directions.

Note: The interface anchor between the seismic and non-seismic category piping is designed for the maximum load using piping reactions from both sides.

Where small Seismic Category II piping is directly attached to Seismic Category I piping, it can be decoupled from Seismic Category I piping.

For dynamic and seismic anchor motion analyses,

(1) Decouple criterion is 25 to 1 in the ratio of "moment of inertia" of run pipe to branch pipe.

(2) Amplified response spectra from the seismic and dynamic analyses used in the large bore piping analysis (run pipe) are applied to the small branch piping interfaces. The seismic and dynamic displacements at the connection point use the run pipe displacements.

(3) Formal analysis methods and procedures similar to the main pipe should be used, or more conservative handbook analysis may also be used.

(4) Branch pipe decoupling using response spectrum analysis can use one of the following options.

   a. Place the branch line close (4 times pipe diameter, for example) to large bore pipe supports.

   b. Demonstrate that the applicable pipe segment is "dynamically rigid".

c. Overlapping analysis. (1) Include the small bore pipe up to two supports in all three directions to the large bore pipe, (2) analyze the small bore pipe again.

d. The dynamic analysis obtains the accelerations at the supports on both sides of the run pipe side (Aa), and side (Ab), and at the small branch at (Ac). Envelope the adjusted amplified response spectra (ARS) from both sides of the run pipe supports, (Ac/Aa) and (Ac/Ab), in all three directions and apply to the branch pipe analysis.

e. From large bore piping analysis, obtain the ARS at the branch location to apply to the branch pipe analysis. (A referenced program is ERSIN01 user's manual.)

The decouple criterion is 25 to 1 in the ratio of "moment of inertia" of run pipe to branch pipe. In the event that this criterion cannot be met and decoupling is also needed, then the decouple method as outlined in NUREG/CR-1980 is used. The following specific criteria from NUREG/CR-1980 are applied. In general, based on the current capability of modeling software the entire system is incorporated into one model instead of using the overlap method.

(1) The overlap region has enough rigid restraints and includes enough bends in three directions to prevent the transmission of motion due to modal excitation from one end to the other and to reduce to a negligible level the sensitivity of the structure to the direction of excitation. Specifically, there are at least four rigid restraints in each of three mutually perpendicular directions in the overlap region (including the ends). For axial restraints only this requirement may be relaxed to a single restraint in any straight segment.

(2) For cases where multiple spectra are involved at the different anchor points the spectrum to be used for each subsystem analysis is dependent on the rigidity of the overlap region. If the fundamental natural frequency of the overlap is demonstrated to be at least 25% higher than the highest significant forcing frequency, then the envelope spectrum of the spectra associated with the boundaries of each separate subsystem is acceptable. If this rigidity of the overlap region is not demonstrated or its frequency characteristics do not meet the criterion stated above the full system anchor-to-anchor envelope spectrum is used for all subsystems.

(3) The envelope of the support forces is increased by 10% for design purposes.

3.7.4 Seismic Instrumentation

In accordance with SRP 3.7.4, the seismic instrumentation system meets the relevant requirements of GDC 2, 10 CFR 50, Appendix S, and 10 CFR 50.55a "Codes and Standards" as they relate to the capabilities and performance of the instruments to adequately measure the effects of earthquakes. Any other seismic instrumentation program, which is justified to have equivalent capabilities, may also be used. The instrumentation used for the measurements is capable of recording the effects produced by the most severe earthquakes that have been historically reported for the unique site considered and surrounding area, with sufficient margin for the limited accuracy, quantity and period of time in which historical data has been accumulated. As required in 10 CFR 50, Appendix S, instrumentation is provided so that the seismic response of safety-related nuclear plant features can be evaluated promptly after an earthquake.

3.7.4.1 Comparison with Regulatory Guide 1.12

The seismic instrumentation program described in the following subsections is consistent with RG 1.12. The procedures for plant response to earthquakes follow the guidelines of the EPRI reports NP-6695 (Reference 3.7-10), NP-5930 (Reference 3.7-11) and TR-100082 (Reference 3.7-12), as permitted by RG 1.166 and RG 1.167.

3.7.4.2 Location and Description of Instrumentation

The following instrumentation and associated equipment of a solid-state digital type are used to measure plant response to earthquake motion:

- triaxial time-history accelerograph (THA): one in the free field, three in the RB and two in the CB;
- recording and playback equipment; and
- annunciators in the main control room.

The seismic instrumentation and equipment has sufficient battery capacity to sense and record 25 minutes of seismic motion over a 24-hour period. The associated battery charger is connected to a Nonsafety-related Distributed Control and Information System (N-DCIS), uninterruptible power supply (see Subsection 7.1.4) in accordance with RG 1.12. Information on the installed instruments is kept and maintained at the plant site as part of pre-earthquake planning as required by RG 1.166.

3.7.4.2.1 Time-History Accelerographs

THAs produce a record of the time-varying acceleration at the sensor location. Each triaxial acceleration sensor unit contains three accelerometers mounted in an orthogonal array (two horizontal and one vertical). All acceleration units have their principal axes oriented and aligned with the building major axes used in development of the mathematical models for seismic analysis. The acceleration sensor for each THA has a dynamic range of 1000:1 zero to peak (i.e., 0.001 g to 1.0 g) and a frequency range between 0.2 Hz to 50 Hz.

One THA is located in the free field at the finished grade. A second THA is located on the RB foundation mat. A third THA is located at the RB floor at the same elevation as finished grade elevation. A fourth THA is located at the RB operating floor. In the CB one THA is located on the foundation mat and a second THA at the main control room. The individual THAs located on each building are interconnected for common starting and common timing. The RB THAs also serve the purpose of measuring the response of the containment and its internal structures since the RB and containment are integrated. The specific THA locations on the floor are selected to maintain occupational radiation exposure as low as reasonably achievable in accordance with RG 8.8 for the location, installation, and maintenance of instrumentation.

The THA system is triggered by the accelerometer signals. The trigger is actuated whenever a threshold acceleration of not more than 0.02 g is exceeded for any of the three axes. The initial setpoint of 0.01 g can be changed once an analysis of significant plant operating data indicates that a different setpoint would provide better THA system operation.

3.7.4.2.2 Recording and Playback Equipment

Recording and playback units are provided for multiple channel recording and playback of the THA accelerometer signals. The data recorder has a dynamic range of 1000:1 and its recording speed is 200 samples per second with a 50 Hz bandwidth. The recorder is capable of recording, as a minimum, the 3 seconds prior to seismic trigger actuation, and operating continuously during the period in which the earthquake exceeds the seismic trigger threshold, plus 5 seconds minimum, beyond the last seismic trigger signal. Furthermore, the recorder is capable of a minimum of 25 minutes of continuous recording.

3.7.4.3 Control Room Operator Notification

Activation of the seismic trigger causes an audible and visual annunciation in the main control room to alert the plant operator that a felt earthquake has occurred.

The recorded THA data in the free field is processed, within four hours after the earthquake, to obtain the 5% damped response spectrum and cumulative absolute velocity for each of the three components. The cumulative absolute velocity calculations are prepared according to the procedures described in EPRI report TR-100082 (Reference 3.7-12).

3.7.4.4 Comparison of Measured and Predicted Responses

Within eight hours after the earthquake, operator actions and operator walkdown inspections are performed in accordance with the guidelines described in Reference 3.7-10, as permitted by RG 1.166, to assess the severity of the earthquake. The data from the seismic instrumentation, coupled with information obtained from a plant walkdown, is used to make the initial determination of whether the plant should be shut down, if it has not already been shut down by operational perturbations resulting from the seismic event. The plant is shut down if the walkdown inspections discover damage to equipment that would affect the safe operation of the plant, or the recorded motion in the free field in any of the three directions (two horizontal and one vertical) exceeds both the response spectrum limit and the cumulative absolute velocity limit as follows:

- Response spectrum limit is exceeded if:
  - at frequencies between 2 and 10 Hz, the recorded response spectral accelerations of 5% damping exceed 1/3 of the corresponding SSE values or 0.2 g, whichever is greater; or
  - at frequencies between 1 and 2 Hz, the recorded response spectral velocities of 5% damping exceed 1/3 of the corresponding SSE values or 152.4 mm/sec (6 in/sec), whichever is greater.
- Cumulative absolute velocity limit is exceeded if the cumulative absolute velocity value calculated according to the procedures in Reference 3.7-12 is greater than 0.16 g-sec.

Following plant shutdown, post-shutdown inspections and tests are performed in accordance with Reference 3.7-10, as permitted by RG 1.167, to determine the physical condition of the plant and its readiness to resume operation. After plant is restarted (or prior to restart if the earthquake caused significant damage to the plant per Reference 3.7-10 definition), long-term evaluations are carried out for engineering assessments of plant structures and equipment using

the actual event records to assure their long-term reliability in accordance with Reference 3.7-10 guidelines, as permitted by RG 1.167.

3.7.4.5 In-Service Surveillance

The seismic instrumentation operates during all modes of plant operation including periods of plant shutdown. The maintenance and repair procedures keep the maximum number of instruments in service during plant operation and shutdown. The walkdown inspection following a felt earthquake ensures the safety condition of the plant.

Each of the seismic instruments is demonstrated operable by the performance of the channel check, channel calibration, and channel functional test operations. The channel checks are performed every two weeks for the first three months of service after startup. After the initial three-month period and three consecutive successful checks, the channel checks are performed on a monthly basis. The channel calibration are performed during each refueling. The channel functional test is performed every 6 months.

3.7.5 Site-Specific Information

(1) [*See Table 2.0-1 for seismology requirements of site-specific SSE ground response spectra.*

(2) *See Table 2.0-1 for soil properties requirements of site-specific foundation bearing capacities, minimum shear wave velocity and liquefaction potential. For sites not meeting the soil property requirements, a site-specific analysis is required to demonstrate the adequacy of the standard plant design.*]*

Text sections that are bracketed and italicized with an asterisk following the brackets are designated as Tier 2. Prior NRC approval is required to change.

3.7.6 References

3.7-1 (Deleted)

3.7-2 Dominion Nuclear North Anna, LLC, "North Anna Early Site Permit Application," Revision 4, May 2005.

3.7-3 Exelon Generation Company, LLC, "Clinton Early Site Permit Application," Revision 0, September 2003.

3.7-4 System Energy Resources, INC, "Grand Gulf Early Site Permit Application," Revision 0, October 2003.

3.7-5 (Deleted)

3.7-6 L. K. Liu, "Seismic Analysis of the Boiling Water Reactor, symposium on seismic analysis of pressure vessel and piping components, First National Congress on Pressure Vessel and Piping," San Francisco, California, May 1971.

3.7-7 M. P. Singh, "Seismic Design Input for Secondary Systems, ASCE Mini-Conference on Civil Engineering and Nuclear Power," Vol. II, Boston, April 1979.

3.7-8 ASCE 4-98, "Seismic Analysis of Safety-Related Nuclear Structures and Commentary."

3.7-9 R. W. Clough et al., "Dynamics of Structure," McGraw-Hill, 1975.

3.7-10 Electric Power Research Institute, "Guidelines for Nuclear Plant Response to an Earthquake," EPRI NP-6695, December 1989.

3.7-11 Electric Power Research Institute, "A Criterion for Determining Exceedance of the Operating Basis Earthquake," EPRI NP-5930, July 1988.

3.7-12 Electric Power Research Institute, "Standardization of Cumulative Absolute Velocity," EPRI TR-100082, December 1991.

3.7-13 Stevenson, J.D., and LaPay, W.S., "Amplification Factors to be Used in Simplified Seismic Dynamic Analysis of Piping Systems," Presented at the ASME Pressure Vessels and Piping Conference, Miami Beach, FL, June 1974.

3.7-14 Lin, C.W. and Esselman, T.C., "Equivalent Static Coefficients for Simplified Seismic Analysis of Piping Systems," Proc., 7th International Conference on Structural Mechanics in Reactor Technology, August 1983.

3.7-15 Kennedy, R.P. and Shinozuka, M., "Recommended Minimum Power Spectral Density Functions Compatible with NRC Regulatory Guide 1.60 Response Spectrum," January 1989, Appendix B, NUREG/CR-5347.

3.7-16 Brookhaven National Laboratory, BNL 52361, "Seismic Design and Evaluation guidelines for the Department of Energy High-Level Waste Storage Tanks and Appurtenances," October 1995.

3.7-17 R. Morante and Y. Wang, "Reevaluation of Regulatory Guidance on Modal Response Combination Methods for Seismic response Spectrum Analysis," NUREG/CR-6645, U.S. Nuclear Regulatory Commission, Washington, DC, December 1999.

3.7-18 "R. McGuire, W. Silva and C. Costantino, "Technical Basis for Revision of Regulatory Guidance on Design Ground Motions: Hazard- and Risk-consistent Ground Motion Spectra Guidelines."

3.7-19 D. Coats, "Recommended Revisions to Nuclear Regulatory Commission Seismic Design Criteria," NUREG/CR-1161, U.S. Nuclear Regulatory Commission, Washington, DC, May 1980.

Table 3.7-1

Damping Values for SSE Dynamic Analysis

Components	Percent of Critical Damping
Reinforced concrete structures	7.0
Welded and friction bolted steel assemblies/structures	4.0
Bearing bolted steel assemblies/structures	7.0
Equipment	3.0
Piping systems[1]	4.0
RPV, skirt, shroud, chimney, and separators	4.0
Control rod guide tubes and CRD housings	2.0
Fuel assemblies	6.0
Cable tray system[2]	
– maximum cable loading	10.0
– empty	7.0
– sprayed-on fire retardant or other cable-restraining mechanism	7.0
Conduit systems[2]	
– maximum cable fill	7.0
– empty	5.0
HVAC ductwork	
- companion angle	7.0
- pocket lock	10.0
- welded	4.0

[1] See Figure 3.7-37 for alternative damping values for response spectra analysis of ASME Section III, Division 1, Class 1, 2, and 3, and ASME B31.1 piping systems.
[2] Notes to Table 4 of RG 1.61 Revision 1 apply.

[***Table 3.7-2***

5%-Damped Target Spectra of Single Envelope Design Ground Motion at Foundation Level

Horizontal		*Vertical*	
Frequency (Hz)	*S_a (g)*	*Frequency (Hz)*	*S_a (g)*
0.1	*0.023*	*0.1*	*0.015*
0.25	*0.141*	*0.25*	*0.094*
2.5	*0.939*	*3.5*	*0.894*
9	*0.783*	*9*	*0.783*
10	*0.92*	*10*	*0.724*
20	*1.35*	*20*	*1.11*
30	*1.35*	*30*	*1.24*
50	*1.1*	*50*	*1.21*
100	*0.5*	*100*	*0.5*

Note:
Applicable scale factors are:

- *1.0 for embedment depths equal to or greater than 14.9 m (49 ft.)*
- *1.35 for embedment depths equal to or less than 2.35 m (7.7 ft.)*
- *Linearly interpolated between 1.0 and 1.35 for intermediate embedment depths.*]*

Text sections that are bracketed and italicized with an asterisk following the brackets are designated as Tier 2. Prior NRC approval is required to change.

[*Table 3.7-3*

Summary of Methods of Seismic Analysis for Primary Building Structures

Building Structure	*Site Condition*	*SSI Model*	*Analysis Method*	*Three Components Combination*	*Modal Combination*	*Computer Program*	*Use of Analysis Output*
Reactor Building including containment and containment internal structures	*Uniform Sites*	*3D lumped mass stick coupled with soil springs*	*Direct integration in the time domain*	*Algebraic Sum*	*n/a*	*DAC3N*	*Max. forces, moments, acceleration, floor response spectra and max. relative displacements. Interface loads with foundation medium not used.*
Reactor Building including containment and containment internal structures	*Uniform and Layered Sites*	*3D lumped mass stick coupled with soil finite elements*	*Frequency response in the frequency domain.*	*Algebraic Sum*	*n/a*	*SASSI2000*	*Max. forces, moments, acceleration, floor response spectra, max. relative displacements and interface loads with foundation medium.*
Fuel Building	*Uniform Sites*	*Integrated with the Reactor Building models*	*Direct integration in the time domain*	*Algebraic Sum*	*n/a*	*DAC3N*	*Max. forces, moments, acceleration and floor response spectra. Interface loads with foundation medium not used.*
Fuel Building	*Uniform and Layered Sites*	*Integrated with the Reactor Building models*	*Frequency response in the frequency domain.*	*Algebraic Sum*	*n/a*	*SASSI2000*	*Max. forces, moments, acceleration, floor response spectra and interface loads with foundation medium.*
Control Building	*Uniform Sites*	*3D lumped mass stick coupled with soil springs*	*Direct integration in the time domain*	*Algebraic Sum*	*n/a*	*DAC3N*	*Max. forces, moments, acceleration and floor response spectra. Interface loads with foundation medium not used.*
Control Building	*Uniform and Layered Sites*	*3D lumped mass stick coupled with soil finite elements*	*Frequency response in the frequency*	*Algebraic Sum*	*n/a*	*SASSI2000*	*Max. forces, moments, acceleration, floor response spectra and*

[*Table 3.7-3*

Summary of Methods of Seismic Analysis for Primary Building Structures

Building Structure	*Site Condition*	*SSI Model*	*Analysis Method*	*Three Components Combination*	*Modal Combination*	*Computer Program*	*Use of Analysis Output*
			domain.				*interface loads with foundation medium.*
Firewater Service Complex	*Uniform Sites*	*3D lumped mass stick coupled with soil springs*	*Direct integration in the time domain*	*Algebraic Sum*	*n/a*	*DAC3N*	*Max. forces, moments, acceleration and floor response spectra. Interface loads with foundation medium not used.*
Firewater Service Complex	*Uniform and Layered Sites*	*3D lumped mass stick coupled with soil finite elements*	*Frequency response in the frequency domain*	*Algebraic Sum*	*n/a*	*SASSI2000*	*Max. forces, moments, acceleration, floor response spectra and interface loads with foundation medium.*]*

Text sections that are bracketed and italicized with an asterisk following the brackets are designated as Tier 2. Prior NRC approval is required to change.

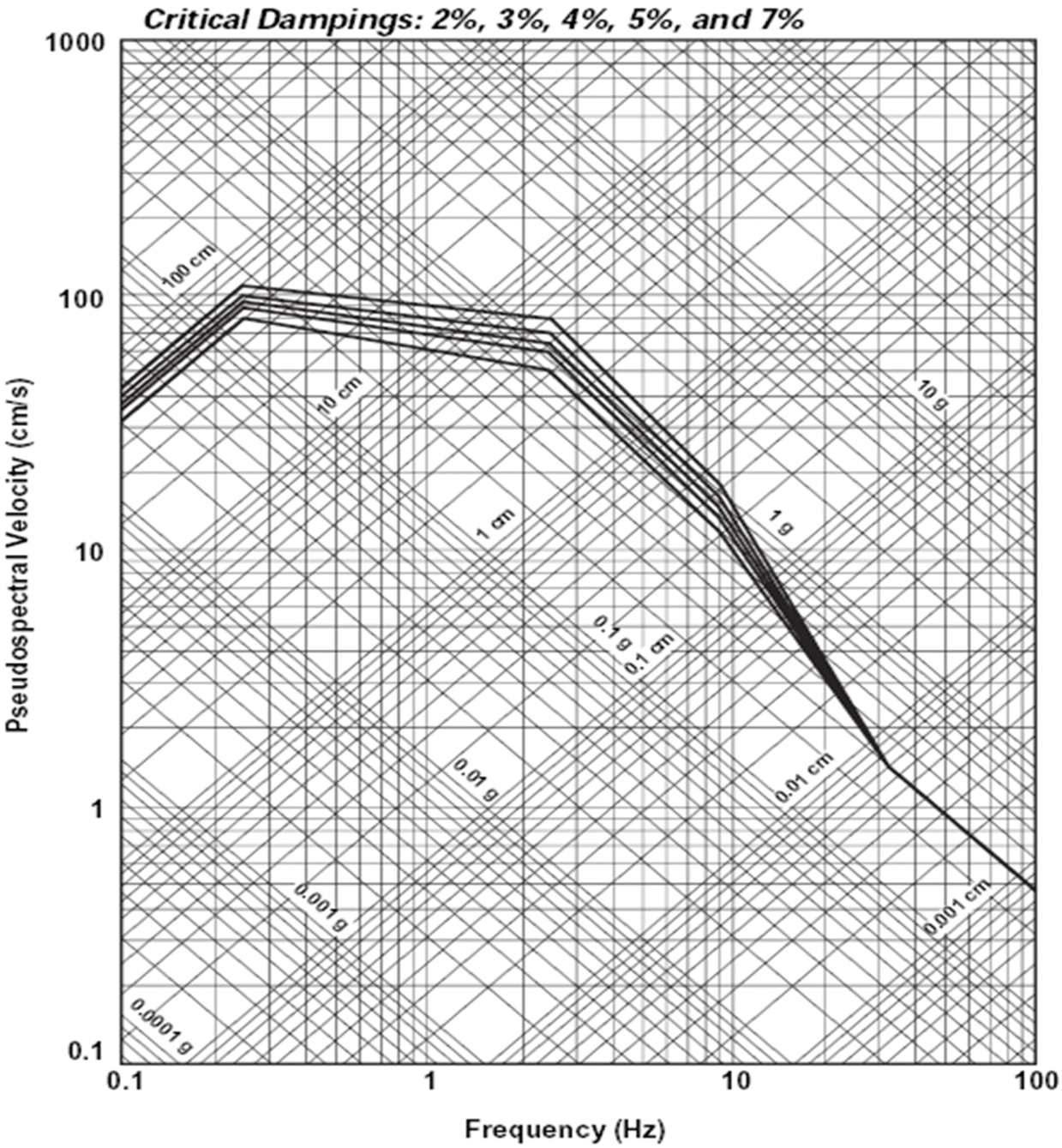

Figure 3.7-1. Horizontal SSE Design Spectra, Generic Site

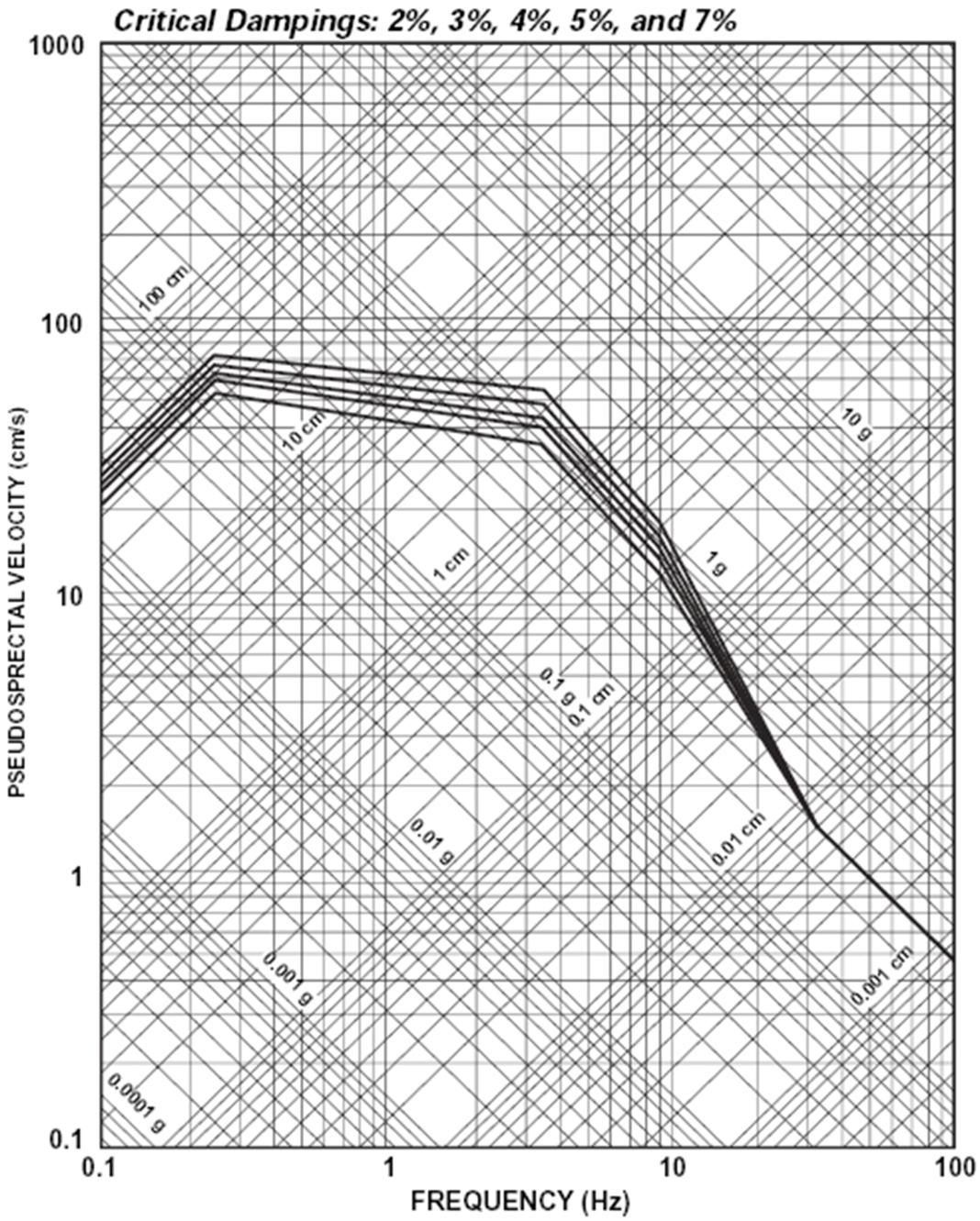

Figure 3.7-2. Vertical SSE Design Spectra, Generic Site

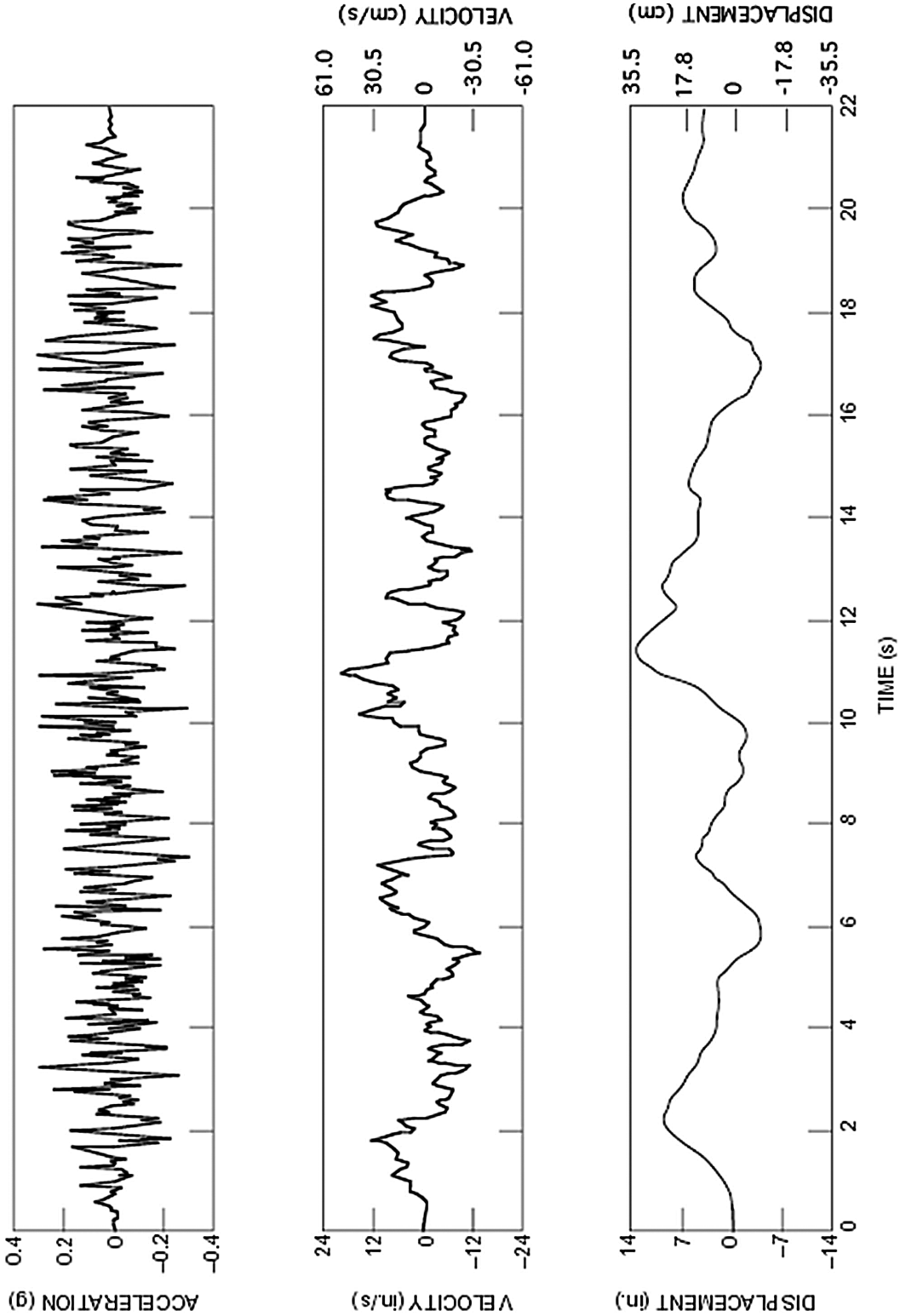

Figure 3.7-3. Horizontal, H1 Component Time History, Generic Site

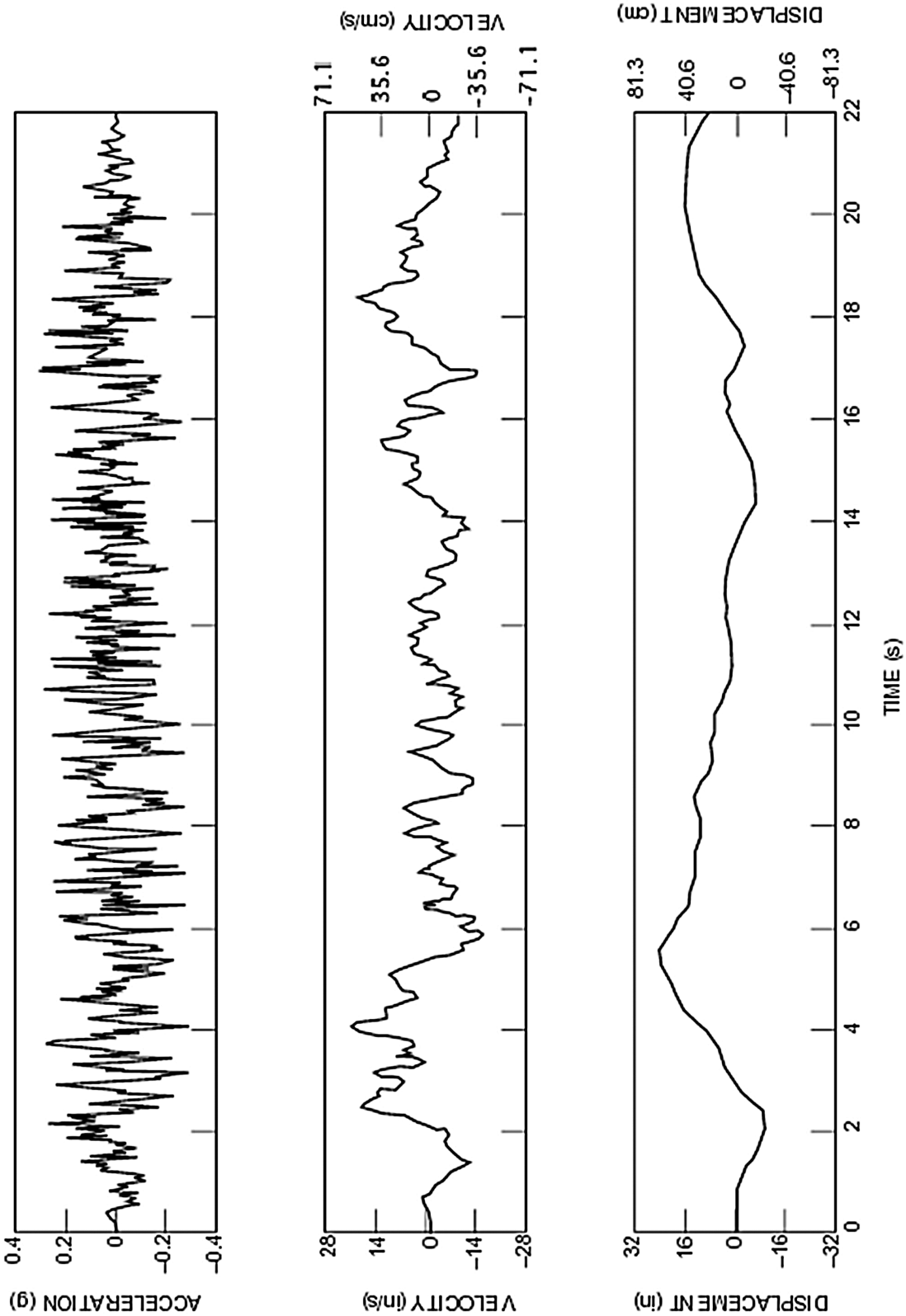

Figure 3.7-4. Horizontal, H2 Component Time History, Generic Site

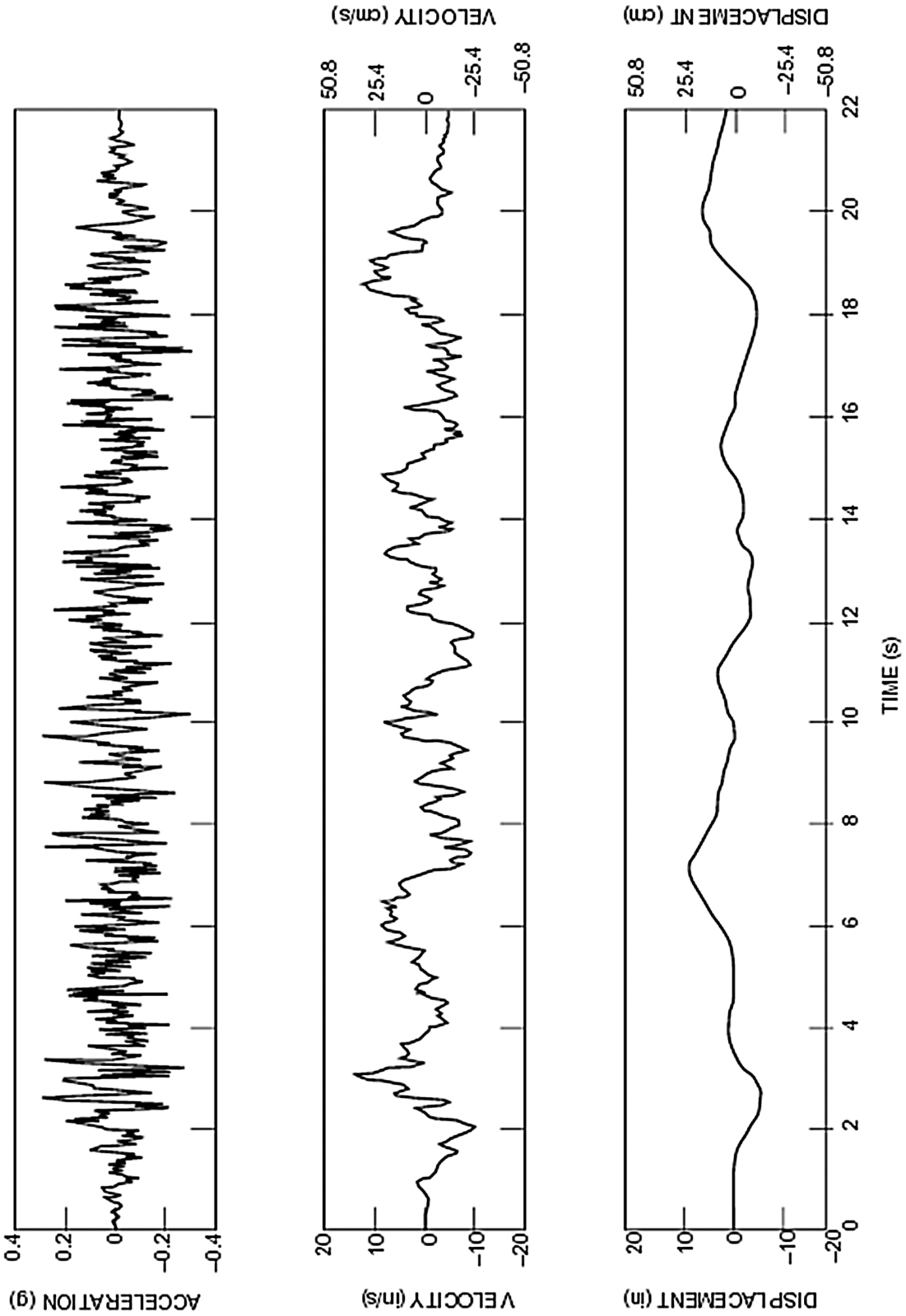

Figure 3.7-5. Vertical, Component Time History, Generic Site

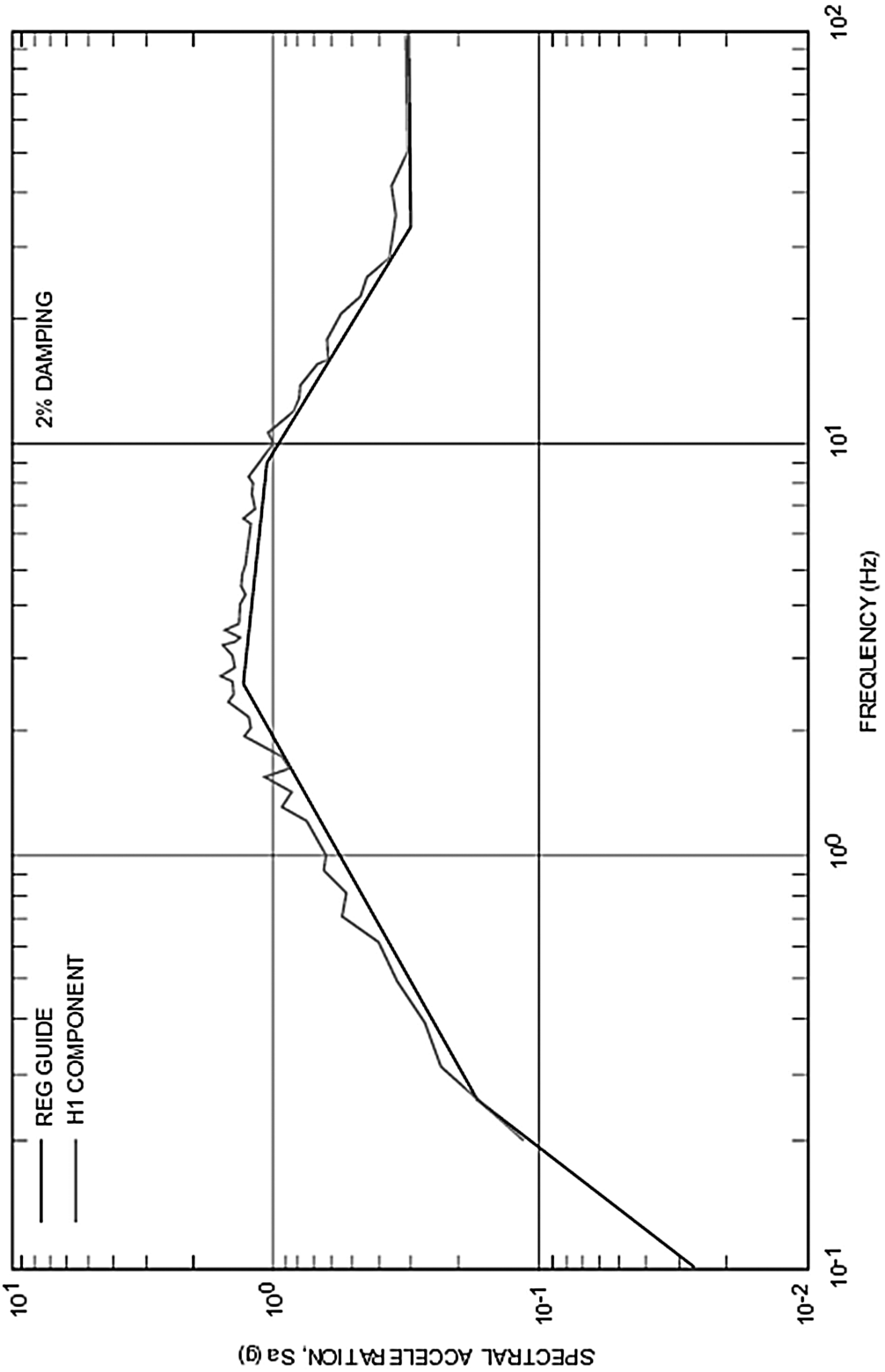

Figure 3.7-6. 2% Damped Response Spectra, H1 Component, Generic Site

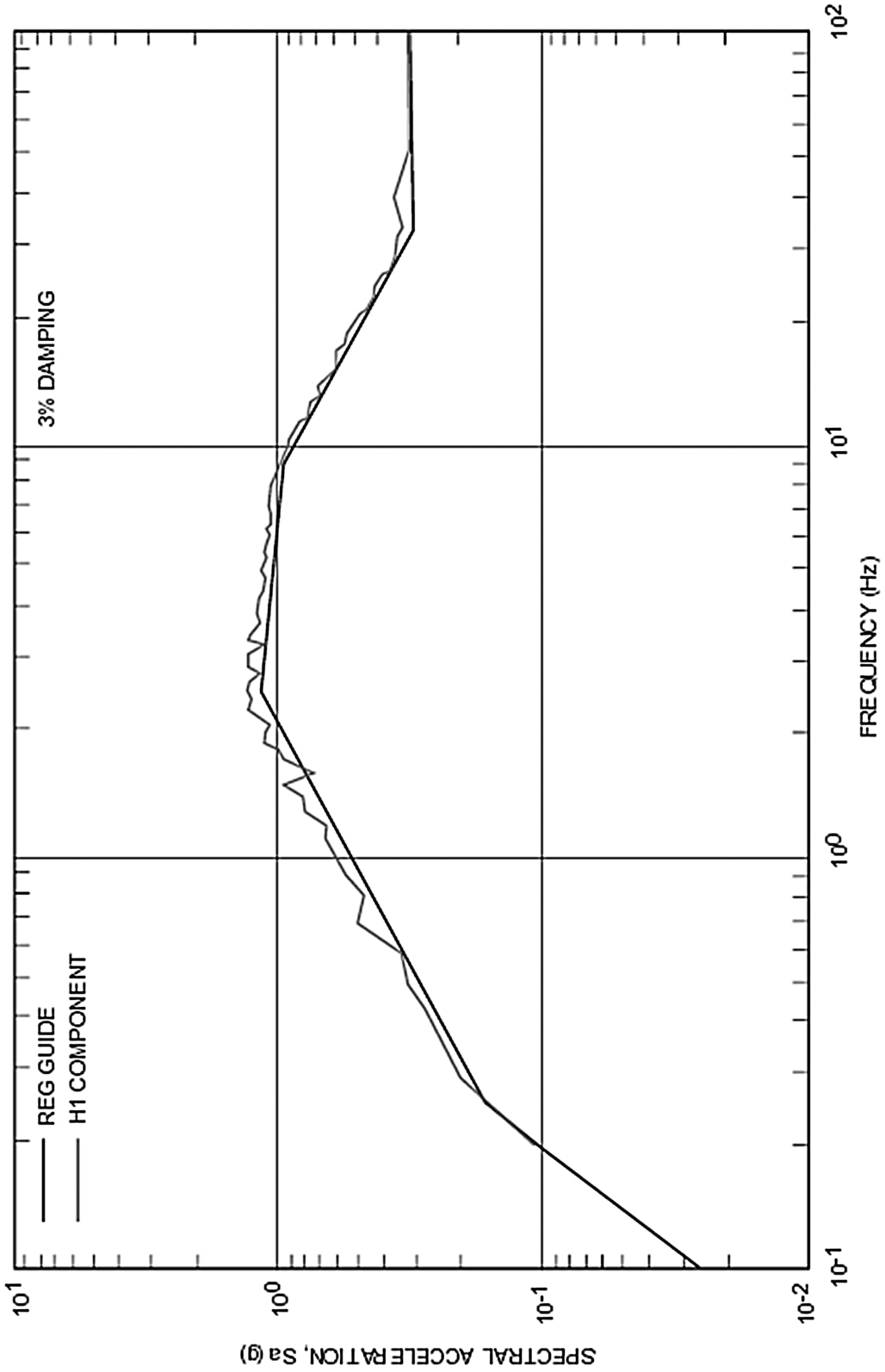

Figure 3.7-7. 3% Damped Response Spectra, H1 Component, Generic Site

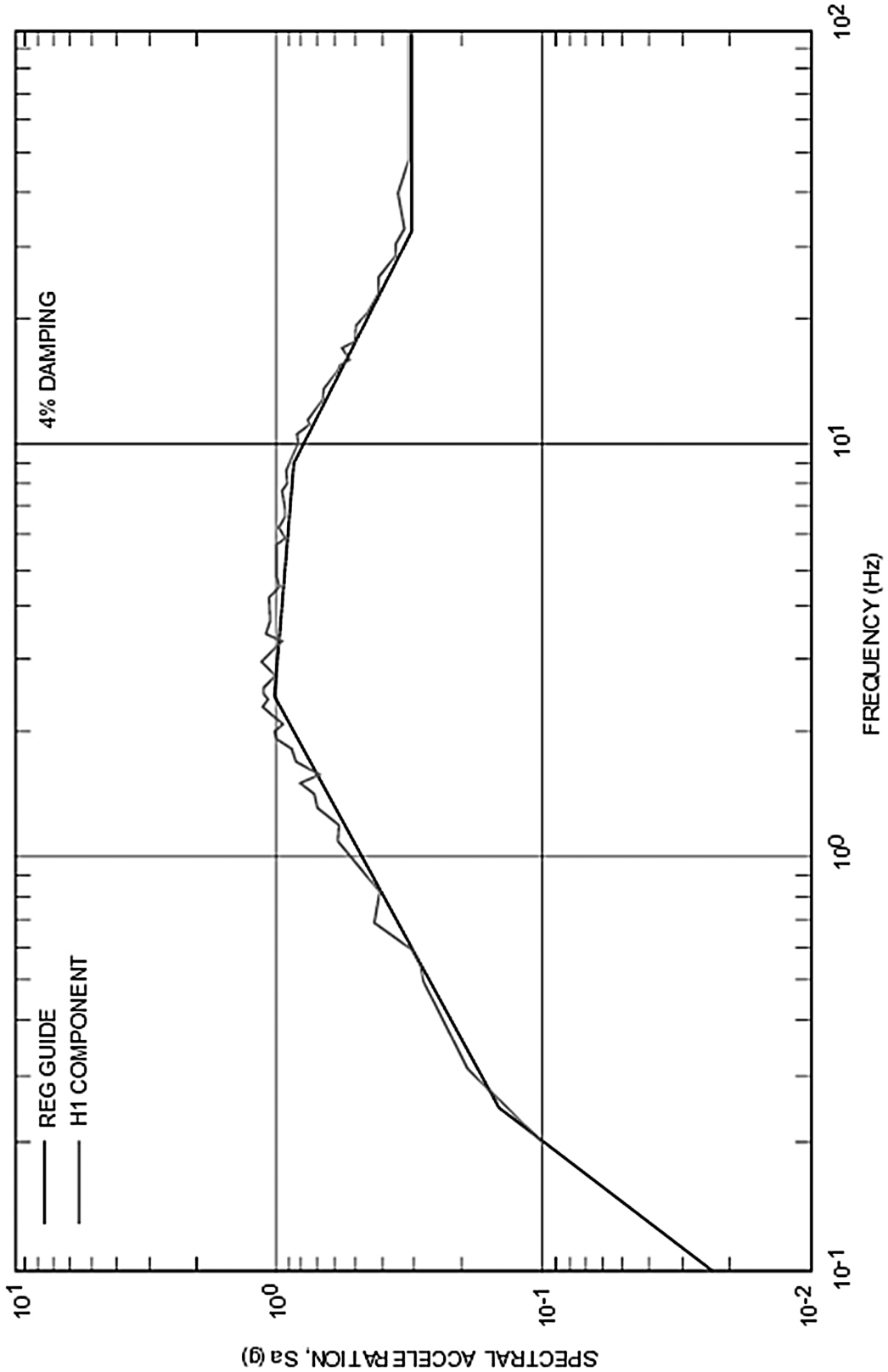

Figure 3.7-8. 4% Damped Response Spectra, H1 Component, Generic Site

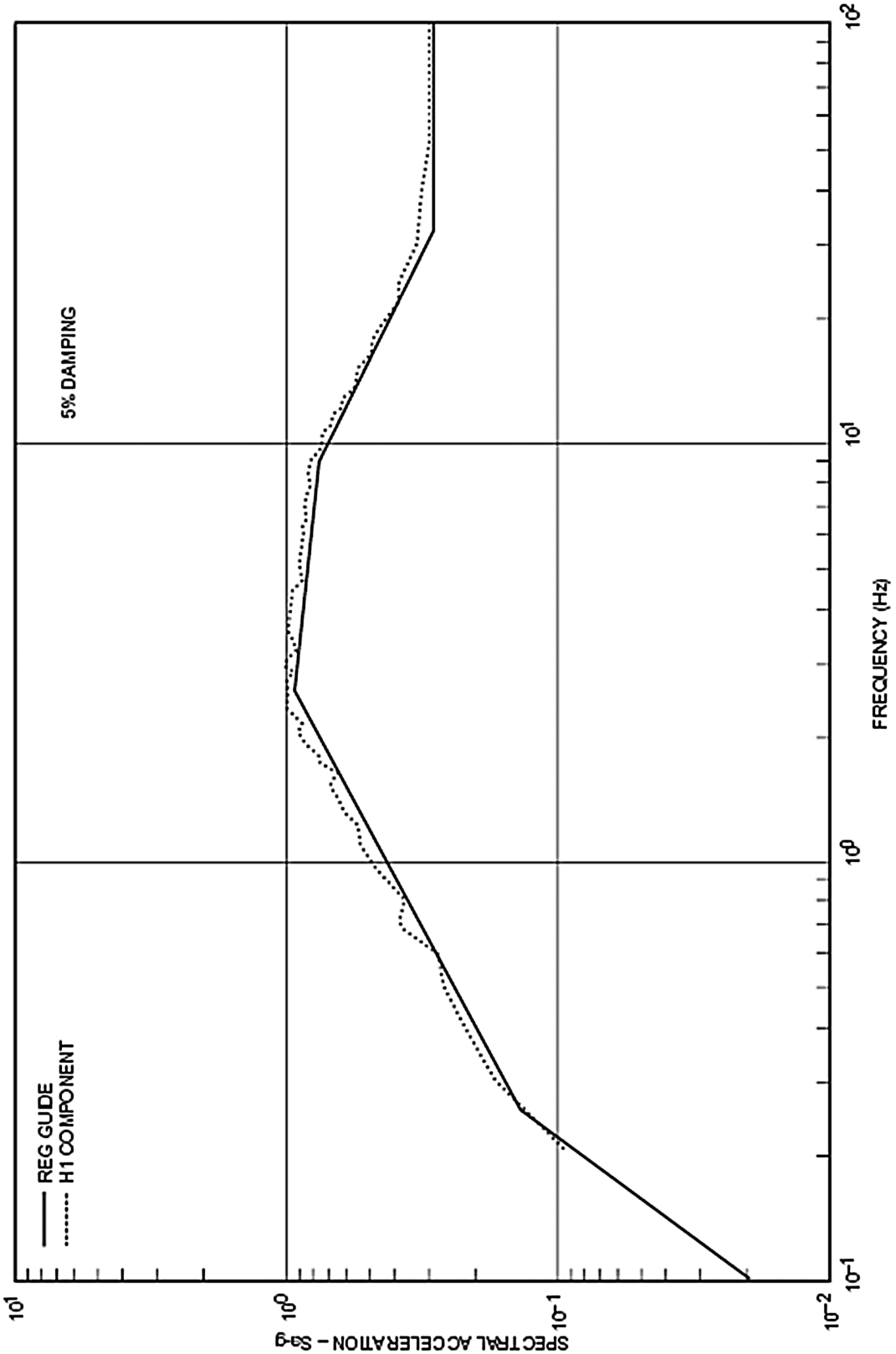

Figure 3.7-9. 5% Damped Response Spectra, H1 Component, Generic Site

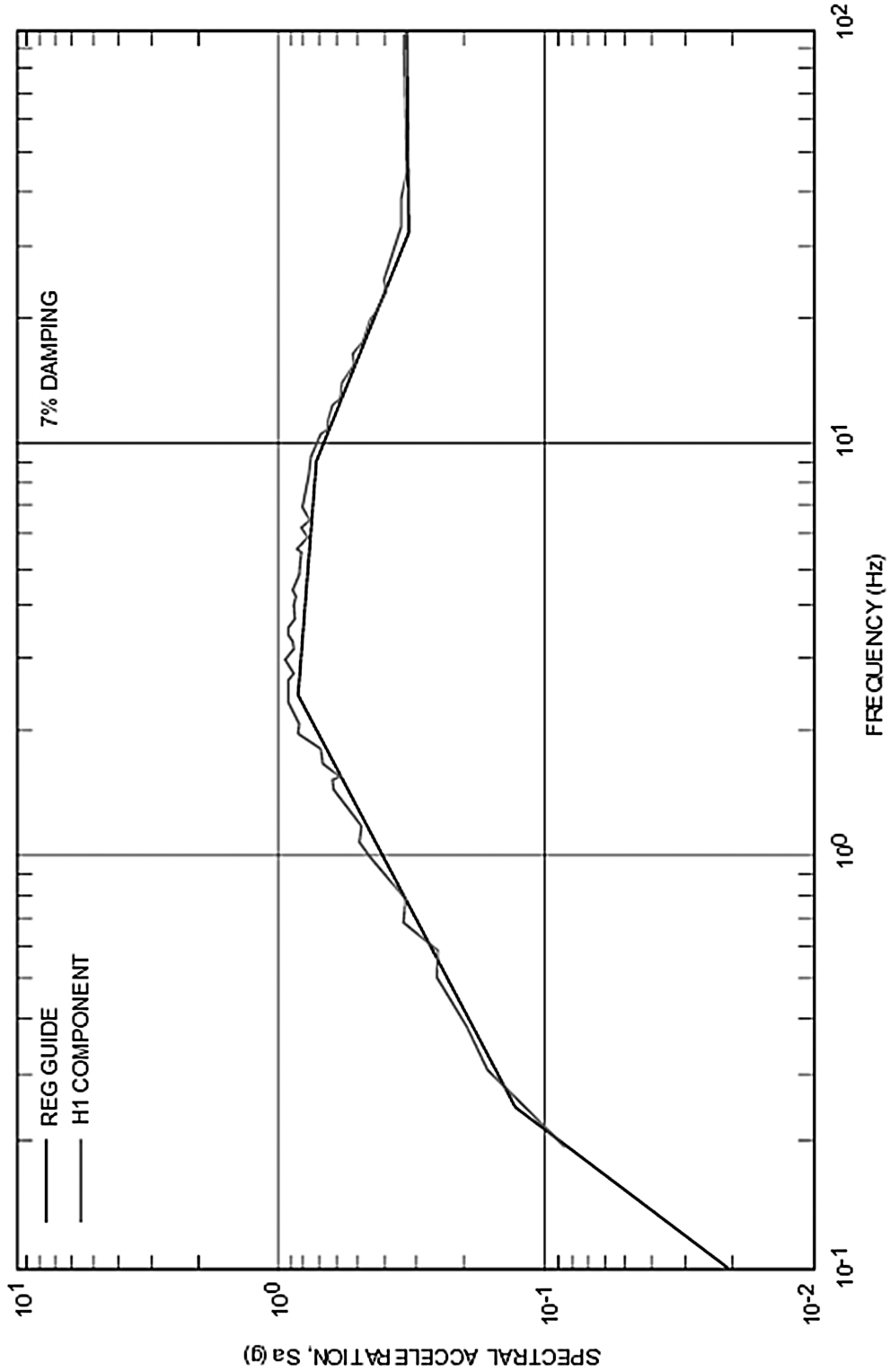

Figure 3.7-10. 7% Damped Response Spectra, H1 Component, Generic Site

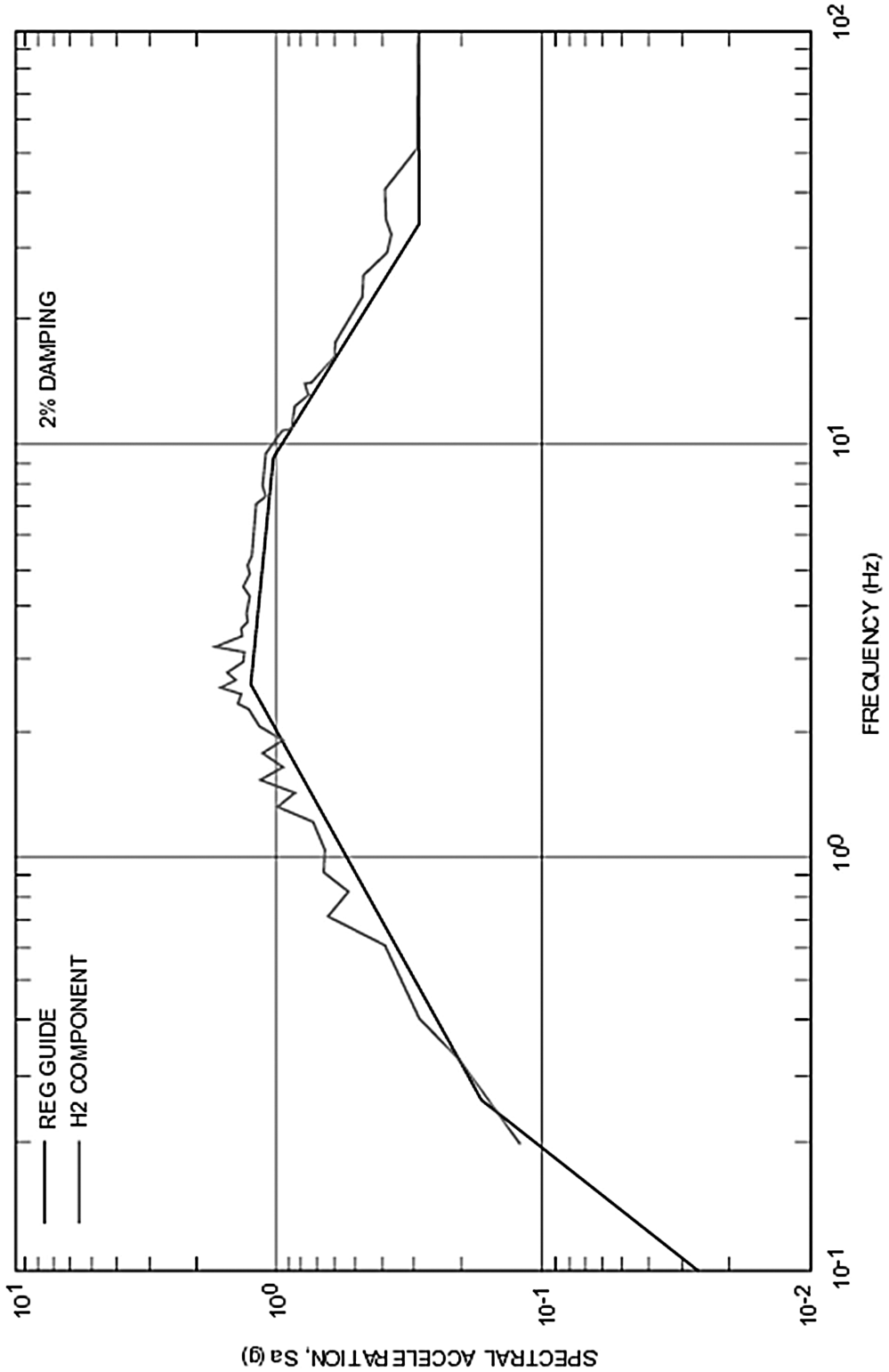

Figure 3.7-11. 2% Damped Response Spectra, H2 Component, Generic Site

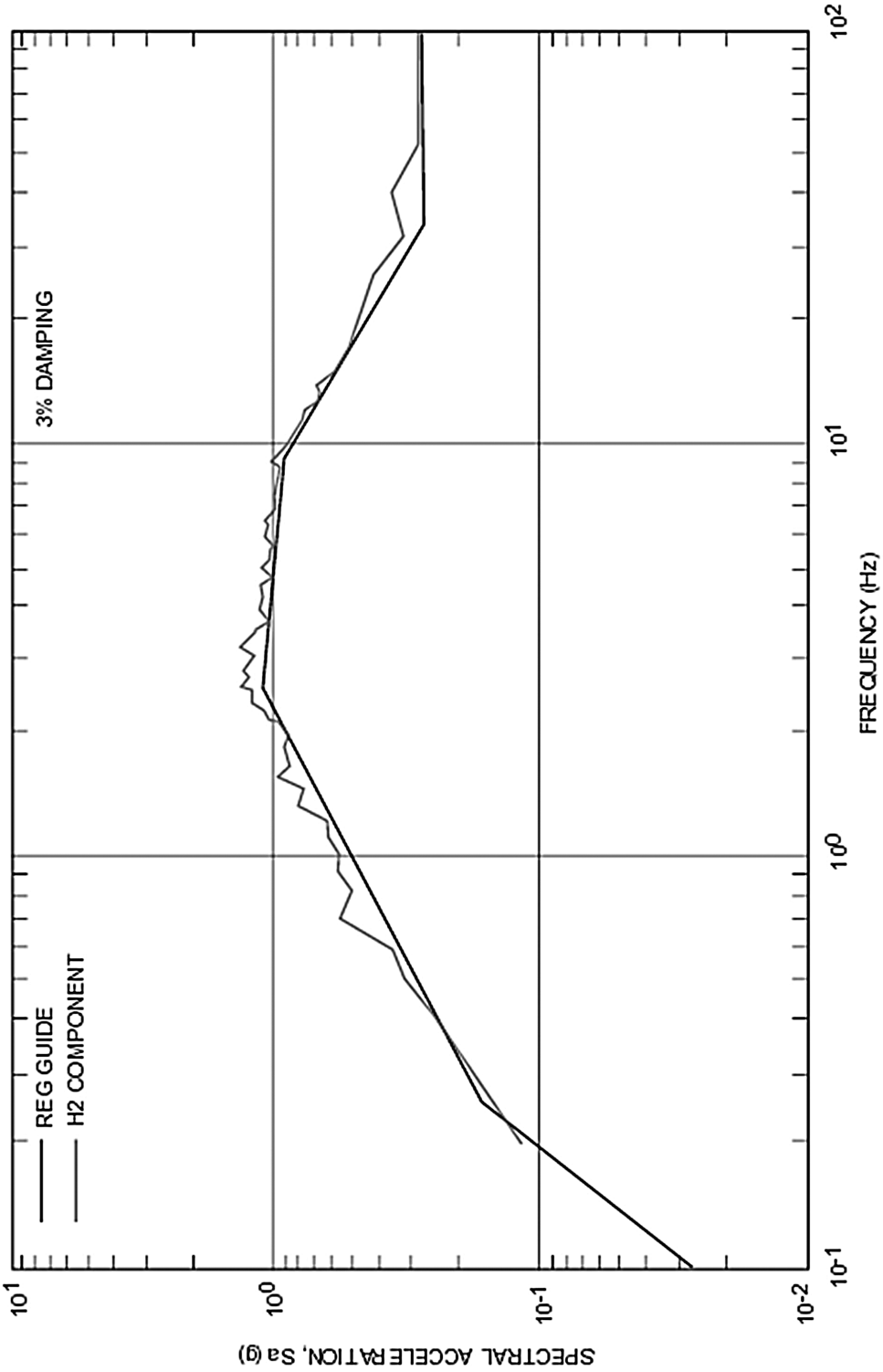

Figure 3.7-12. 3% Damped Response Spectra, H2 Component, Generic Site

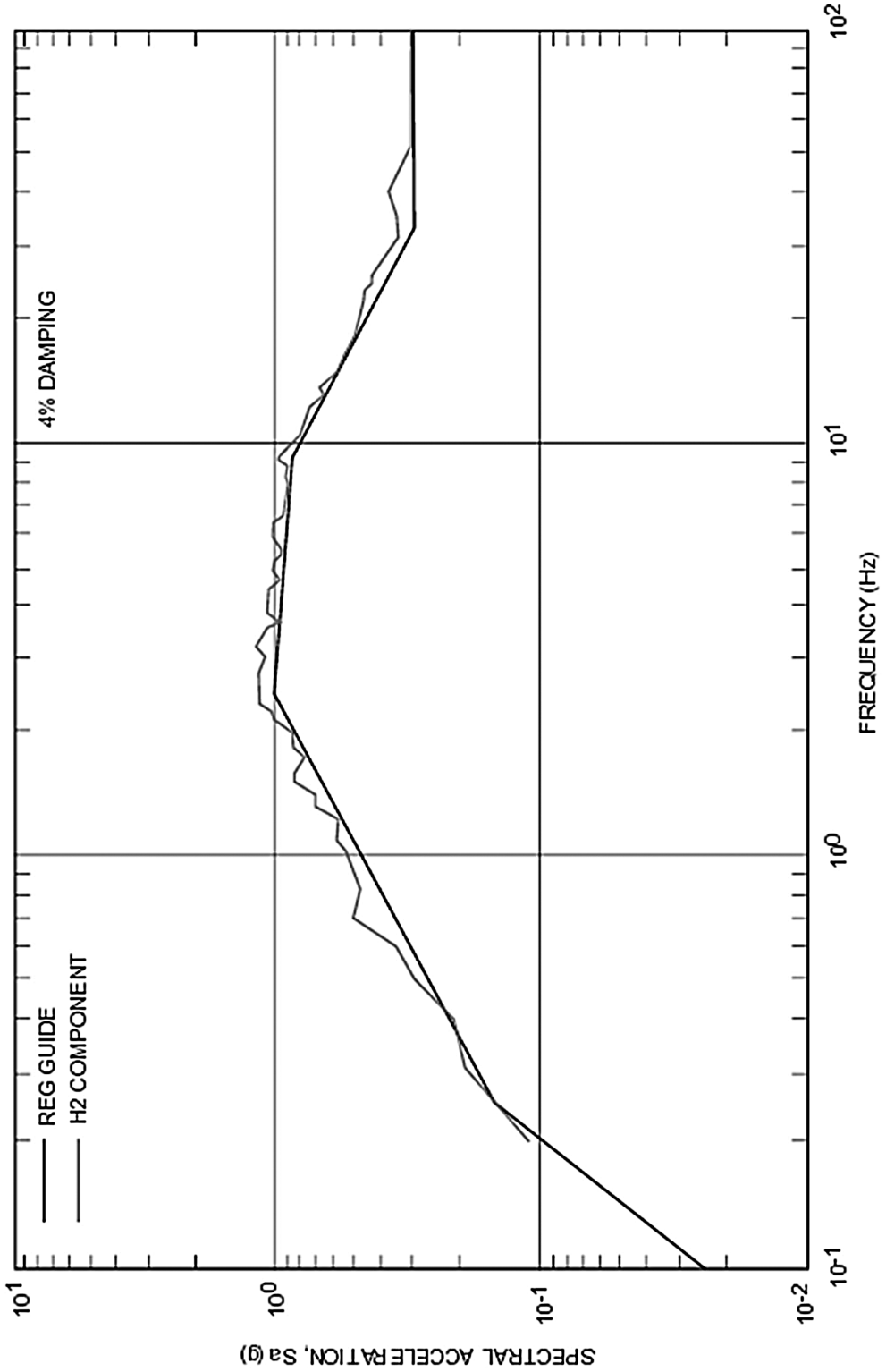

Figure 3.7-13. 4% Damped Response Spectra, H2 Component, Generic Site

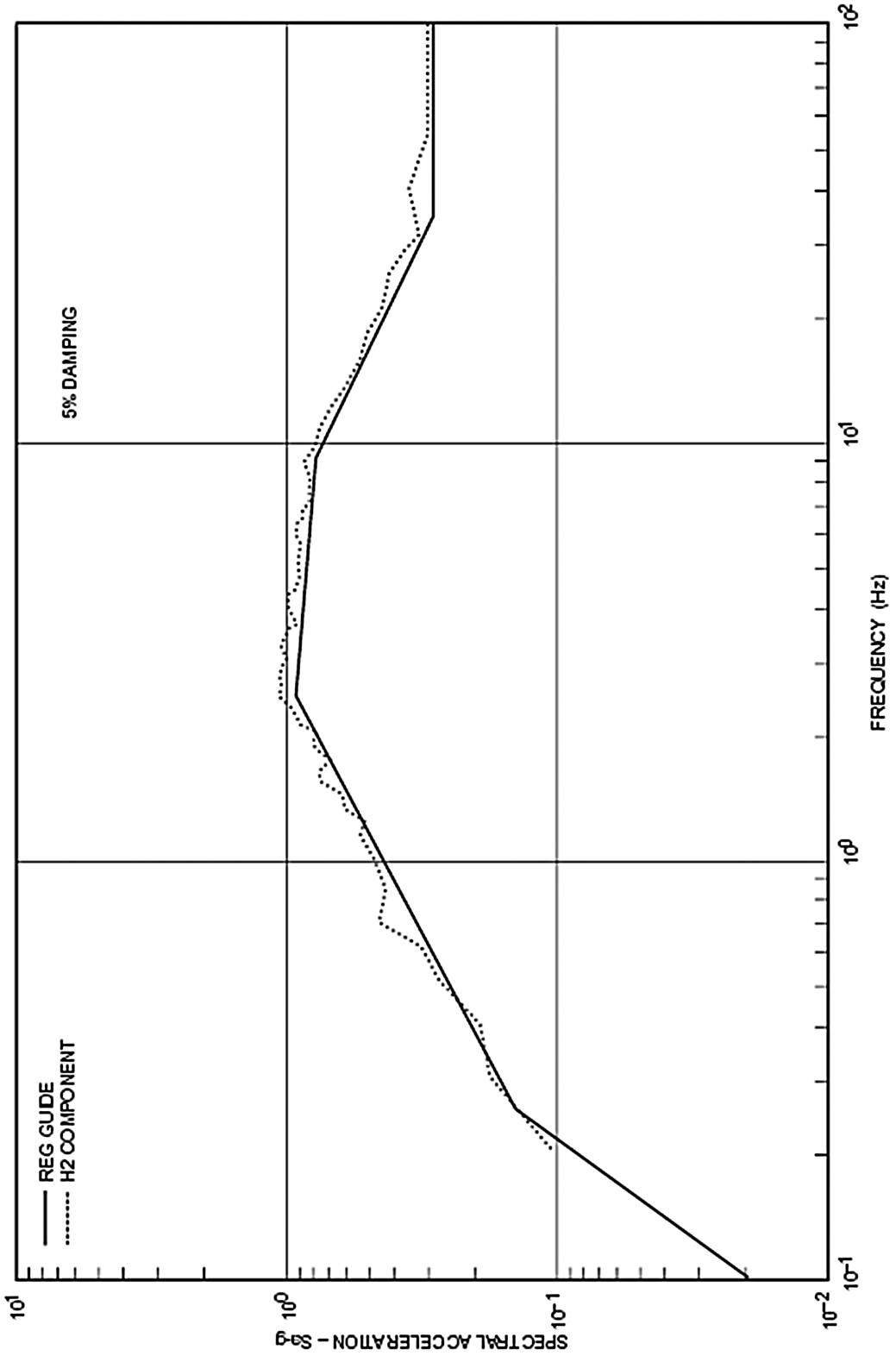

Figure 3.7-14. 5% Damped Response Spectra, H2 Component, Generic Site

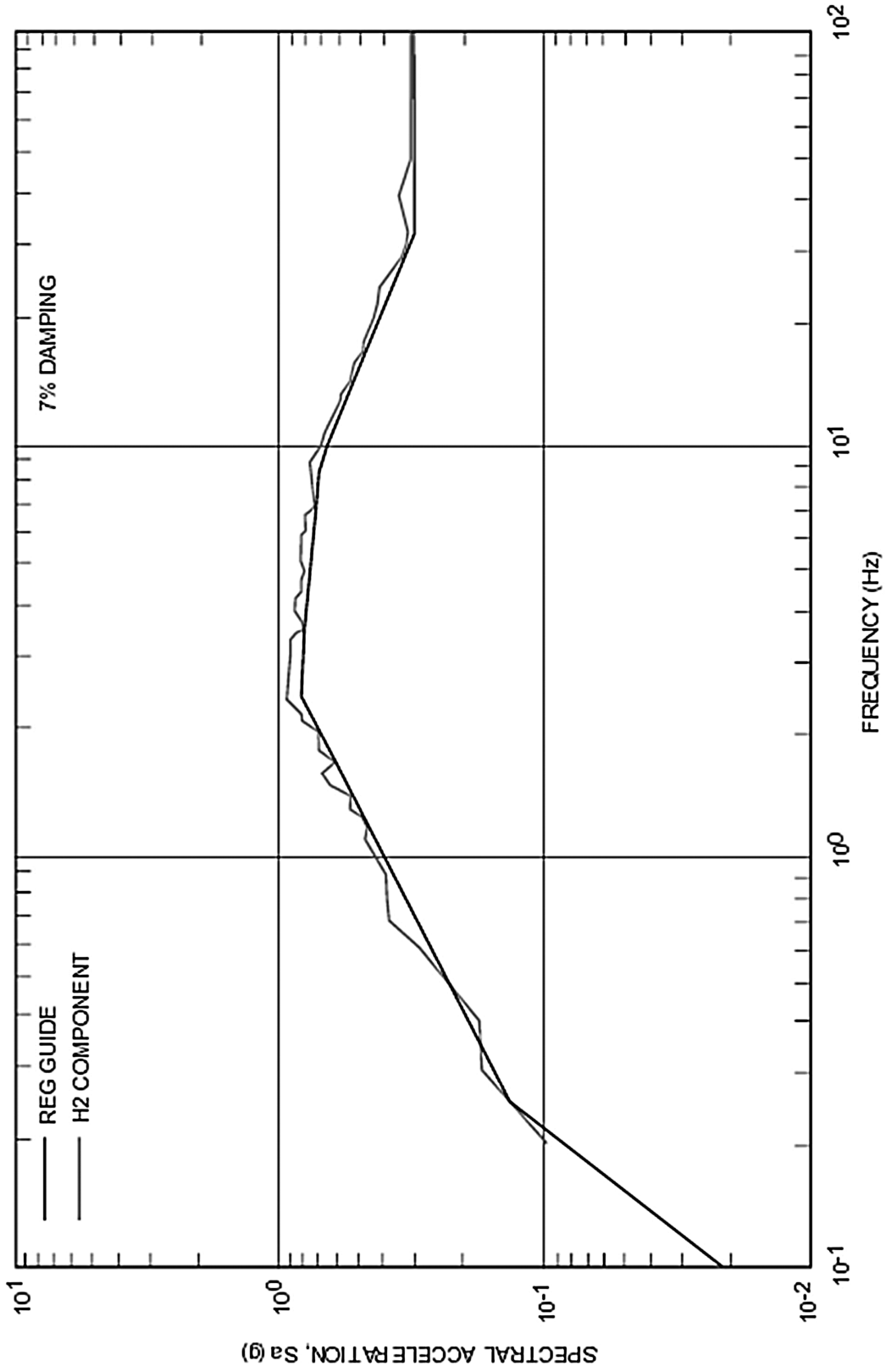

Figure 3.7-15. 7% Damped Response Spectra, H2 Component, Generic Site

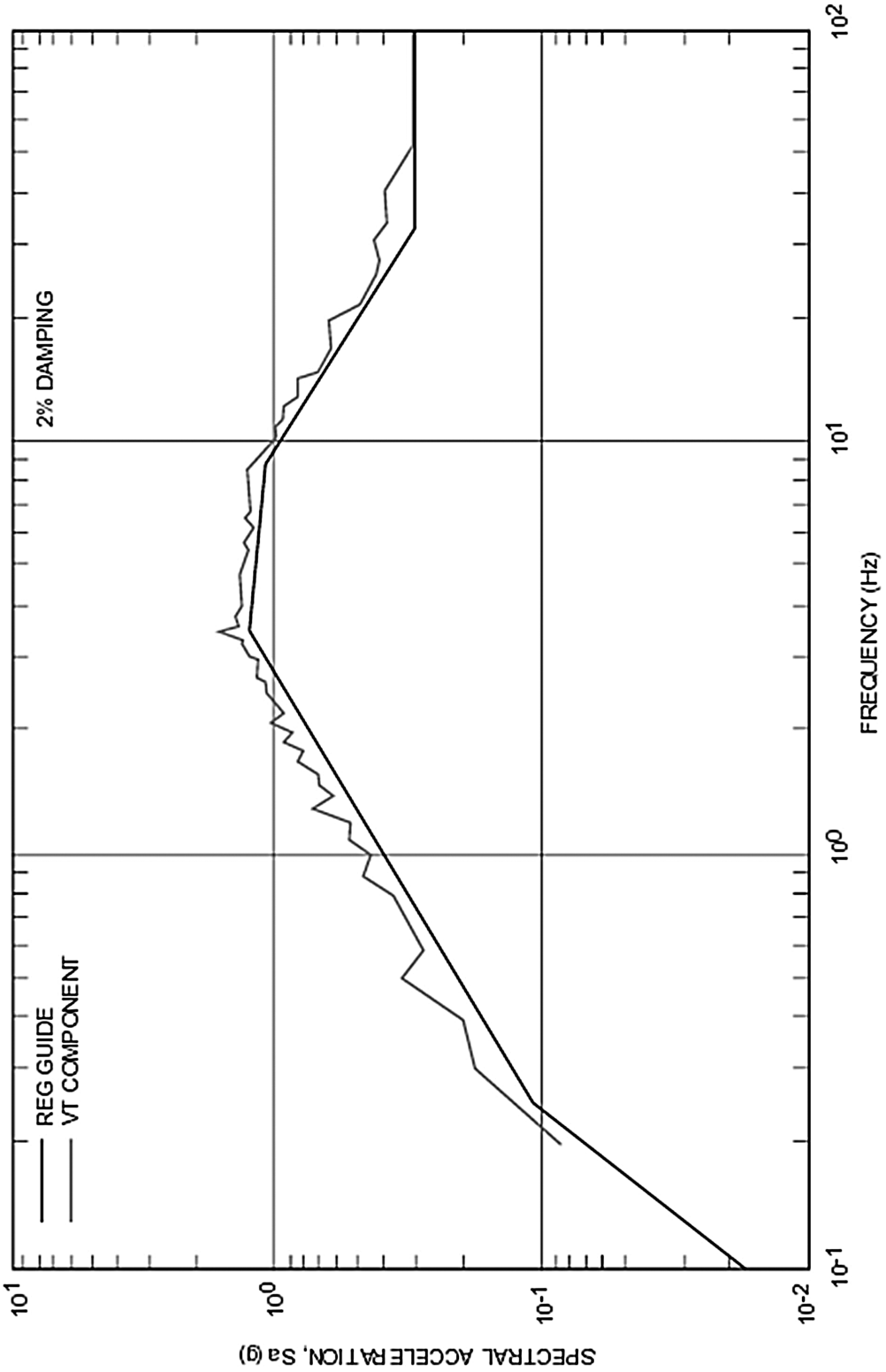

Figure 3.7-16. 2% Damped Response Spectra, Vertical Component, Generic Site

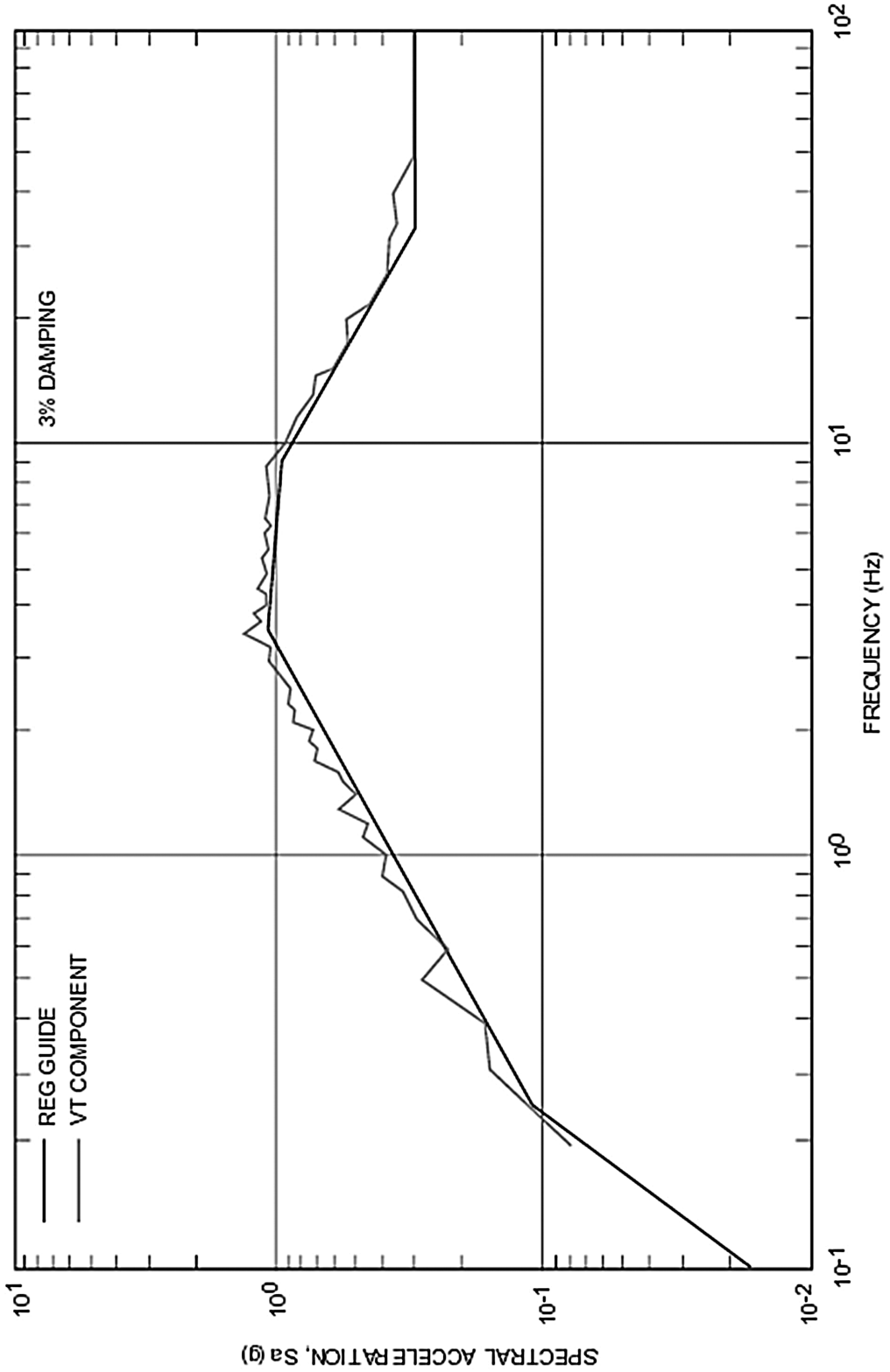

Figure 3.7-17. 3% Damped Response Spectra, Vertical Component, Generic Site

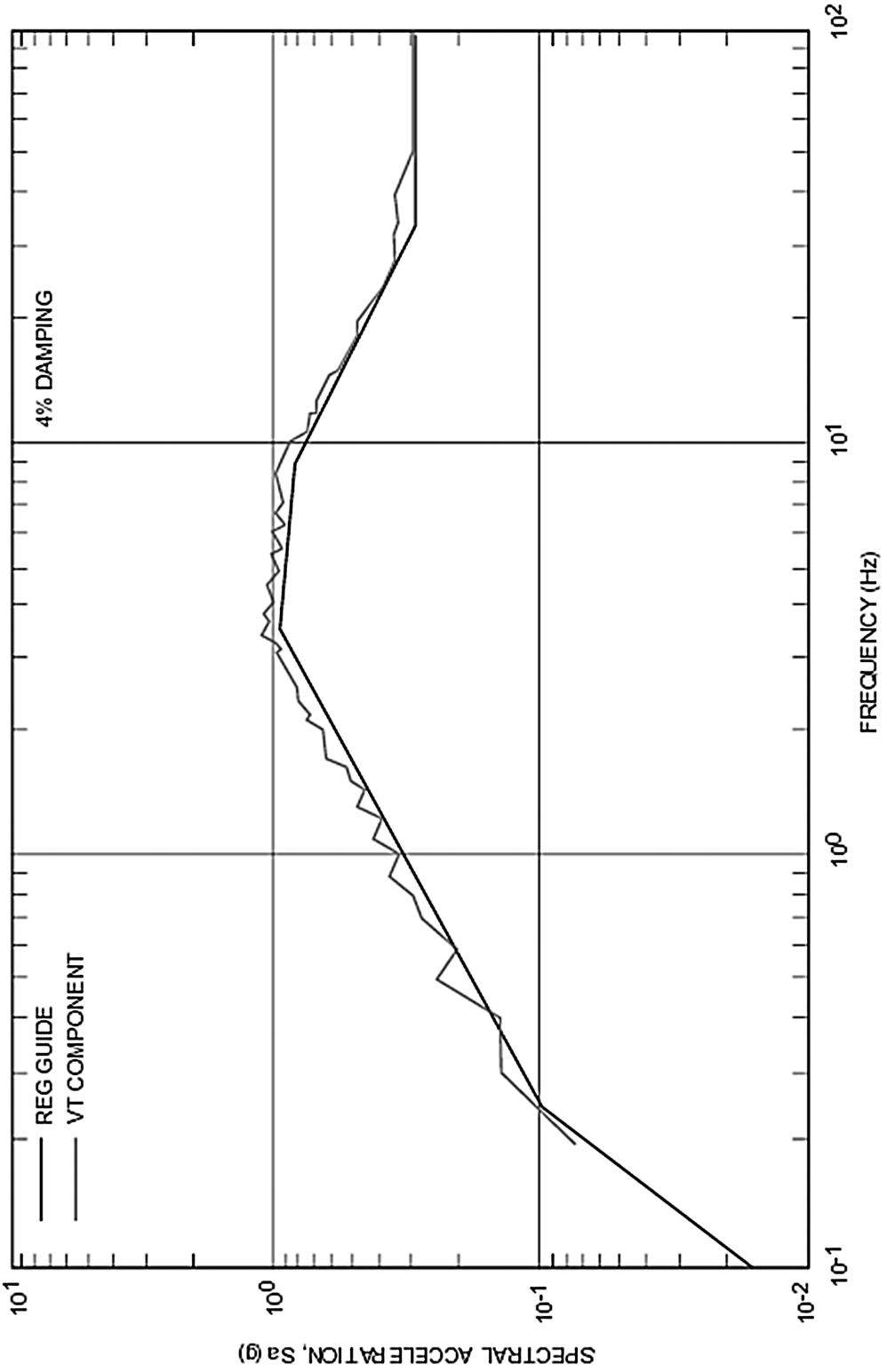

Figure 3.7-18. 4% Damped Response Spectra, Vertical Component, Generic Site

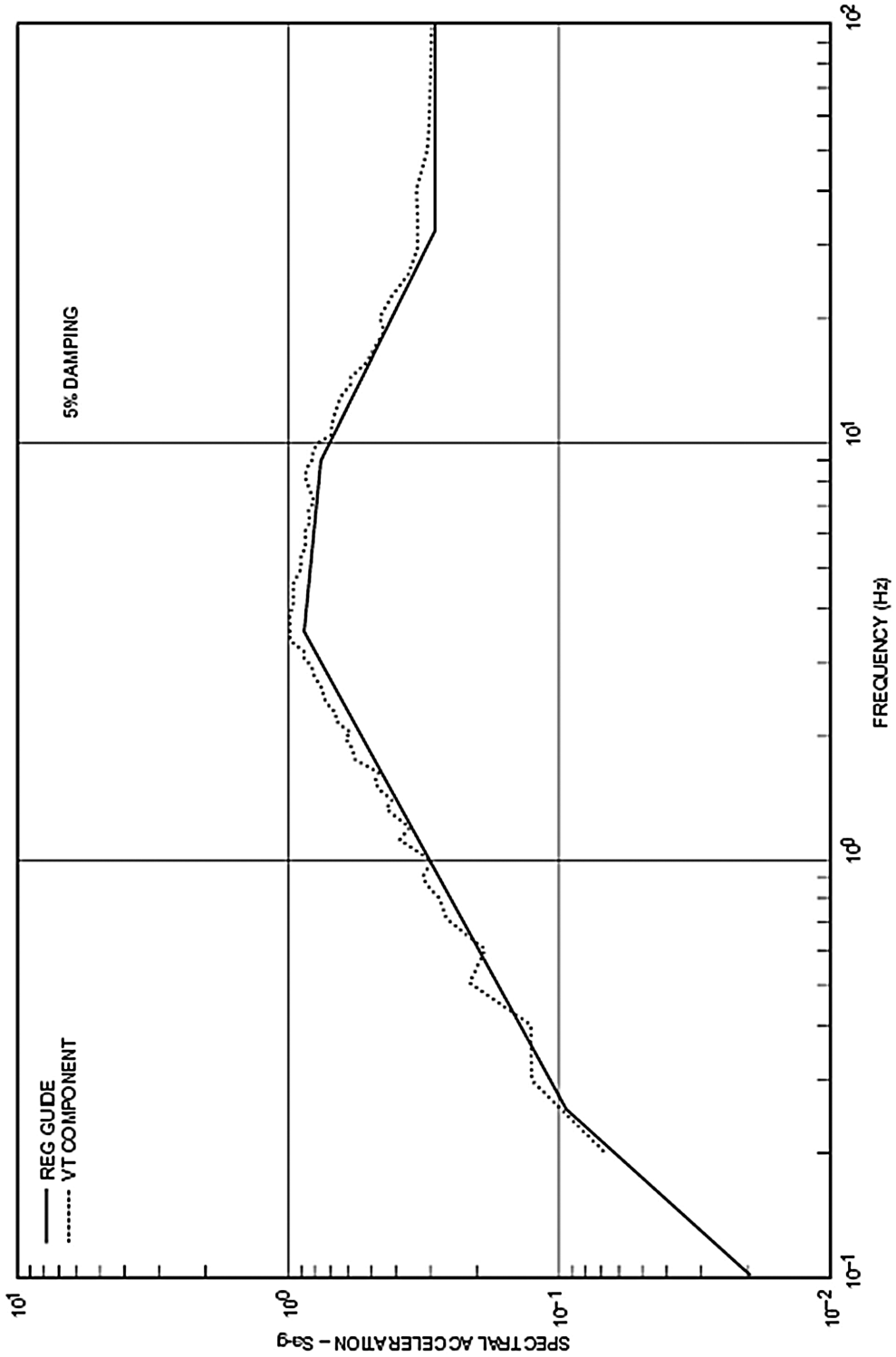

Figure 3.7-19. 5% Damped Response Spectra, Vertical Component, Generic Site

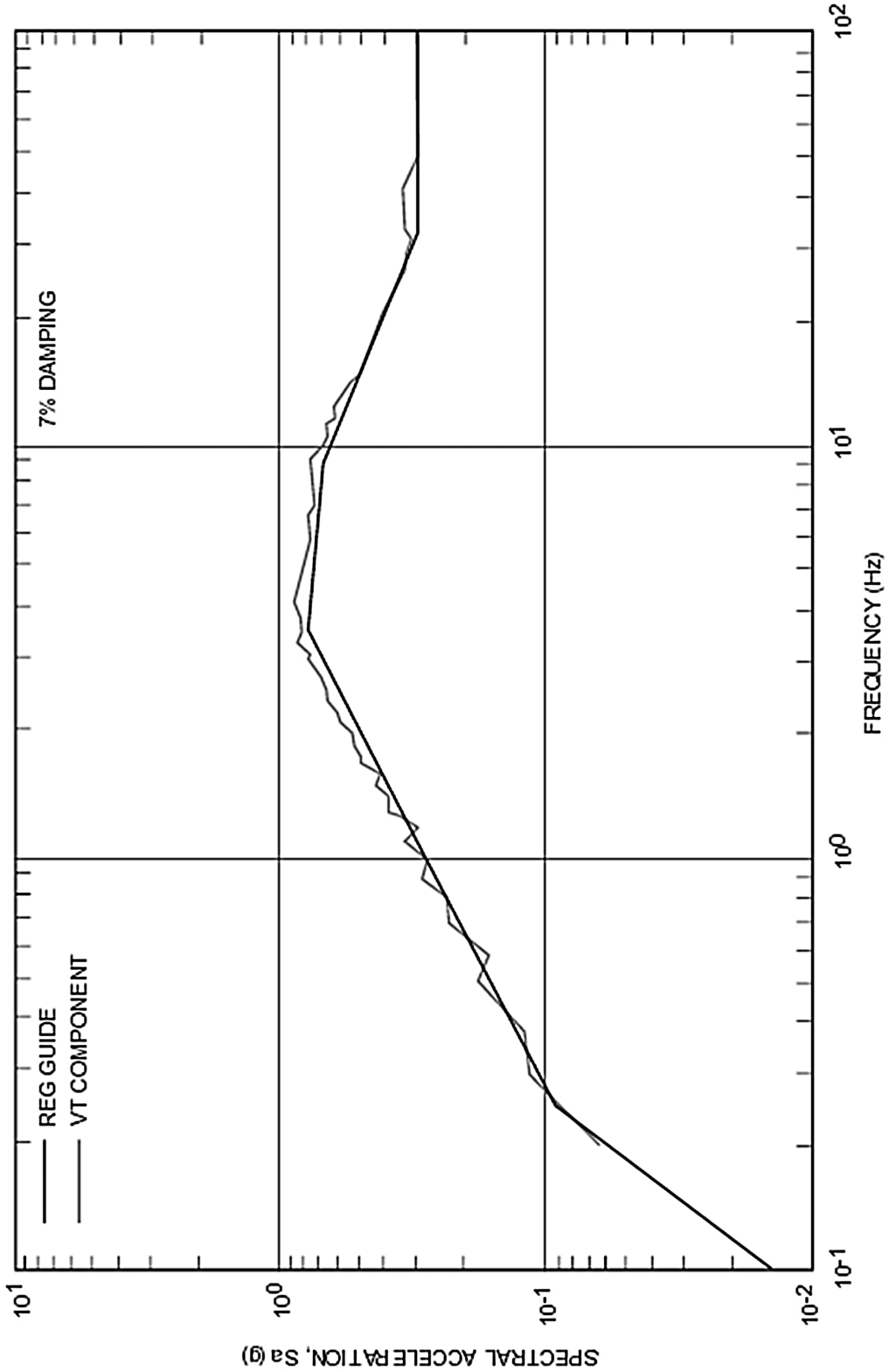

Figure 3.7-20. 7% Damped Response Spectra, Vertical Component, Generic Site

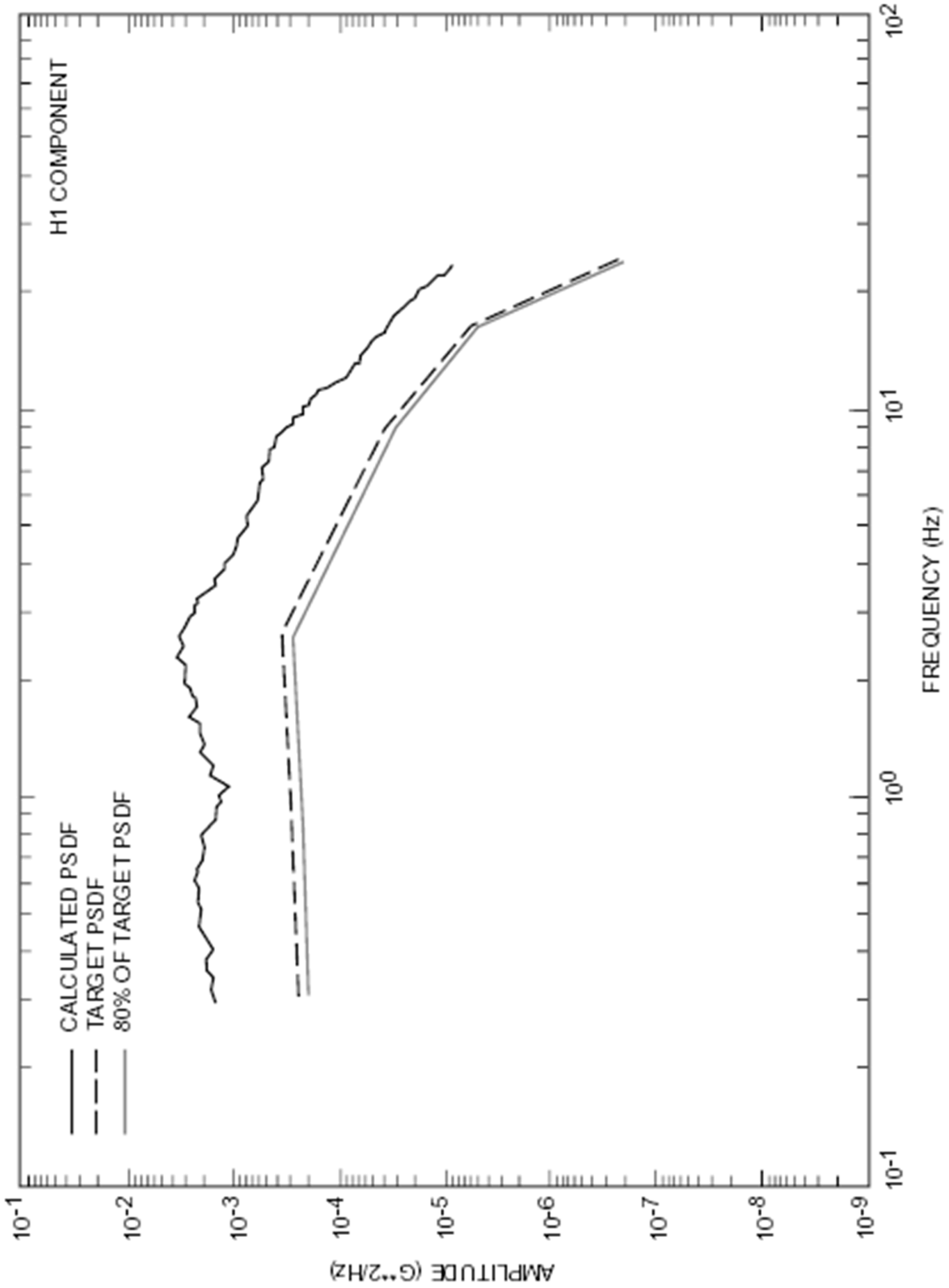

Figure 3.7-21. Power Spectral Density Function, H1 Component, Generic Site

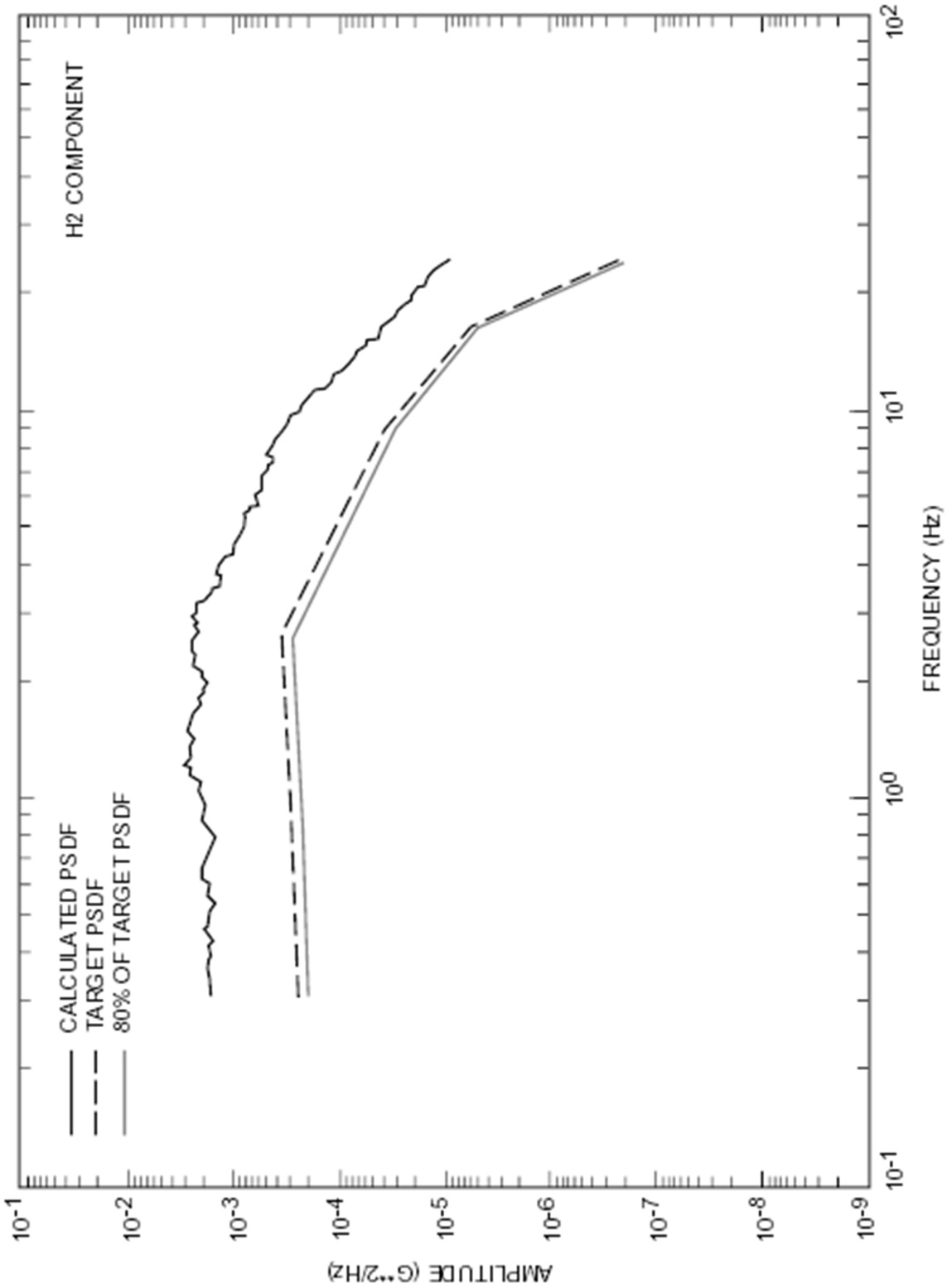

Figure 3.7-22. Power Spectral Density Function, H2 Component, Generic Site

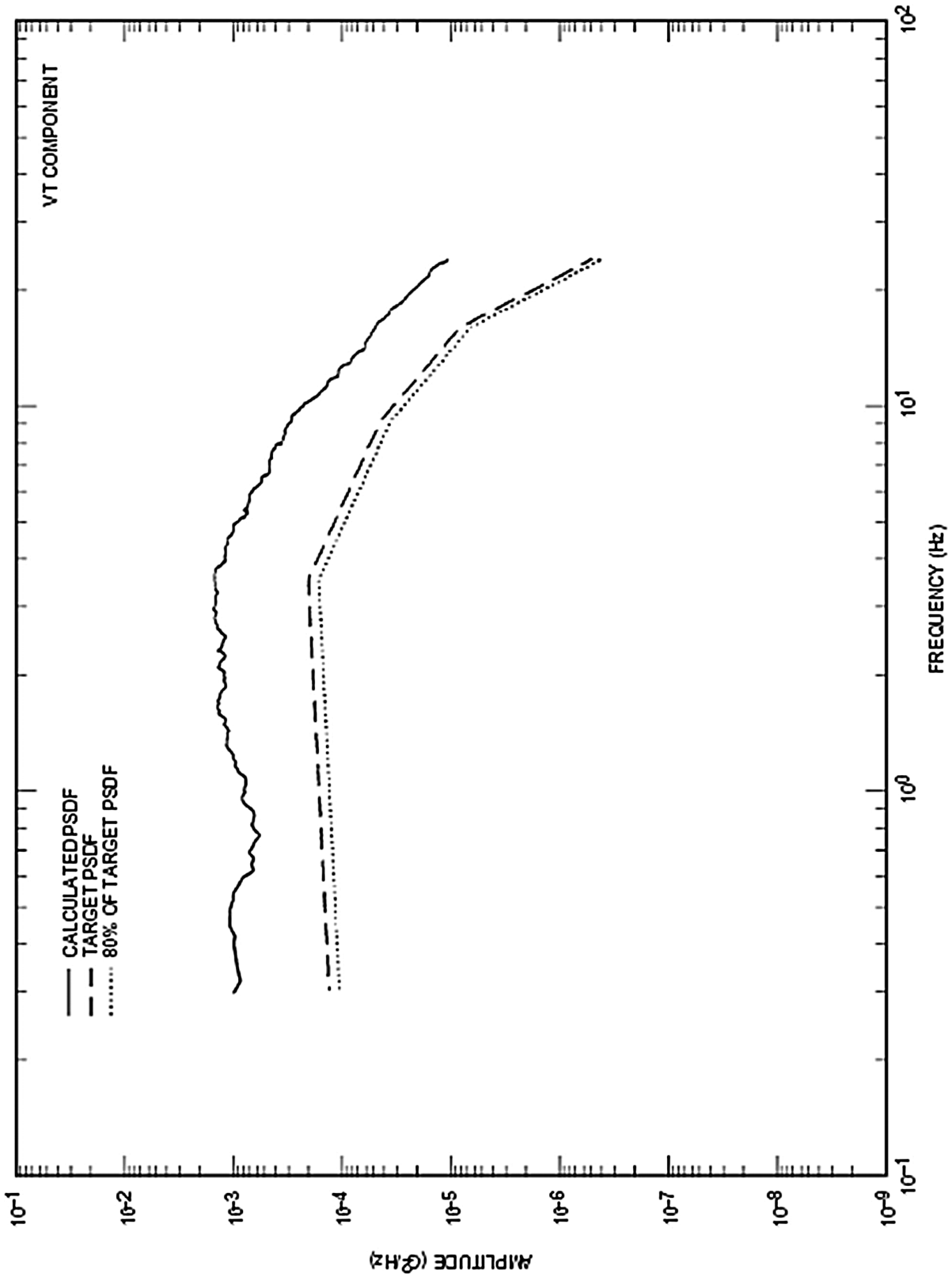

Figure 3.7-23. Power Spectral Density Function, Vertical Component, Generic Site

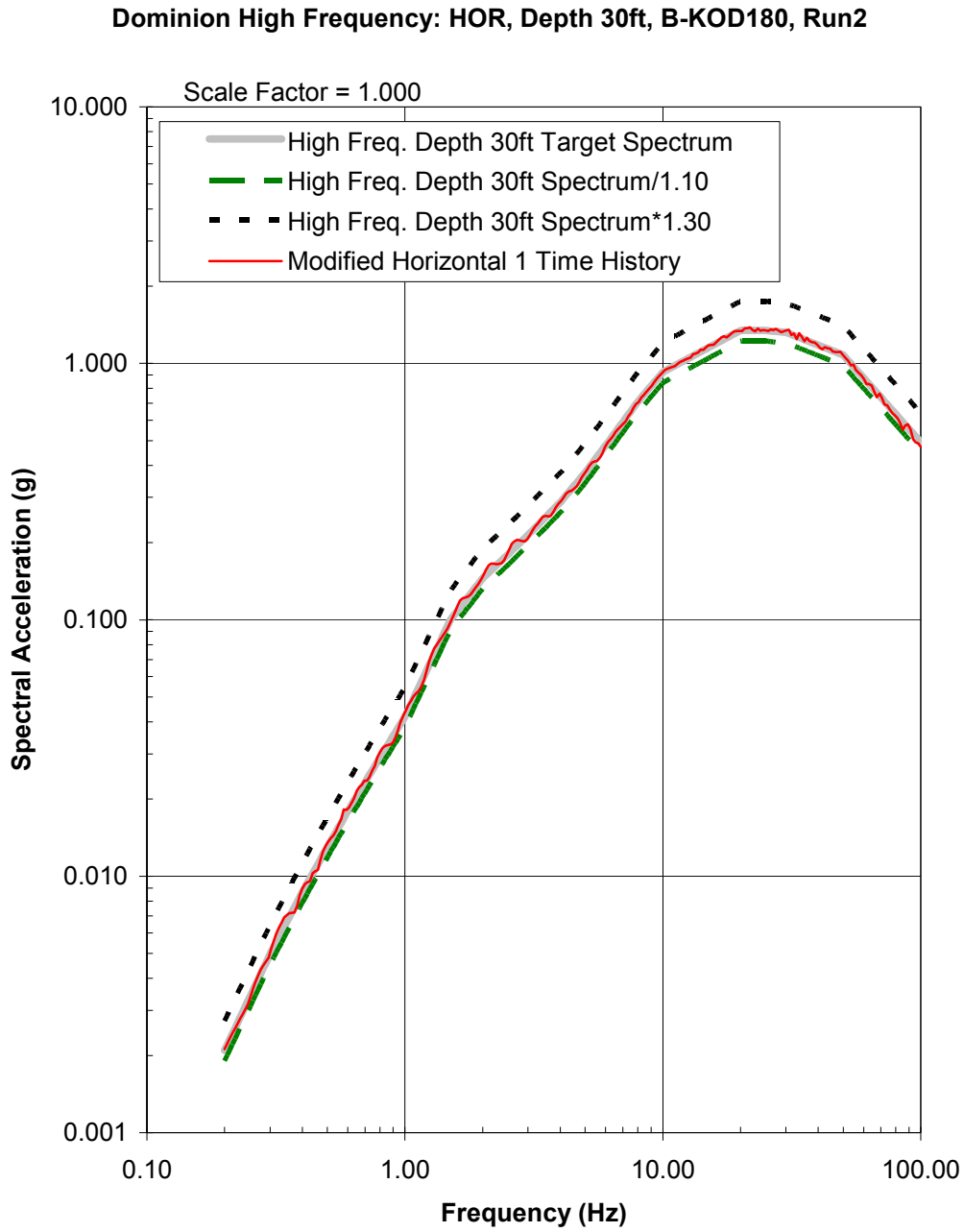

Note: B-KOD is the Livermore earthquake of January 27, 1980 recorded at the Kodak Building Site in San Ramon, California. "HOR" is "Horizontal".

Figure 3.7-24. North Anna ESP Horizontal H1 Target Spectrum at ESBWR CB Base

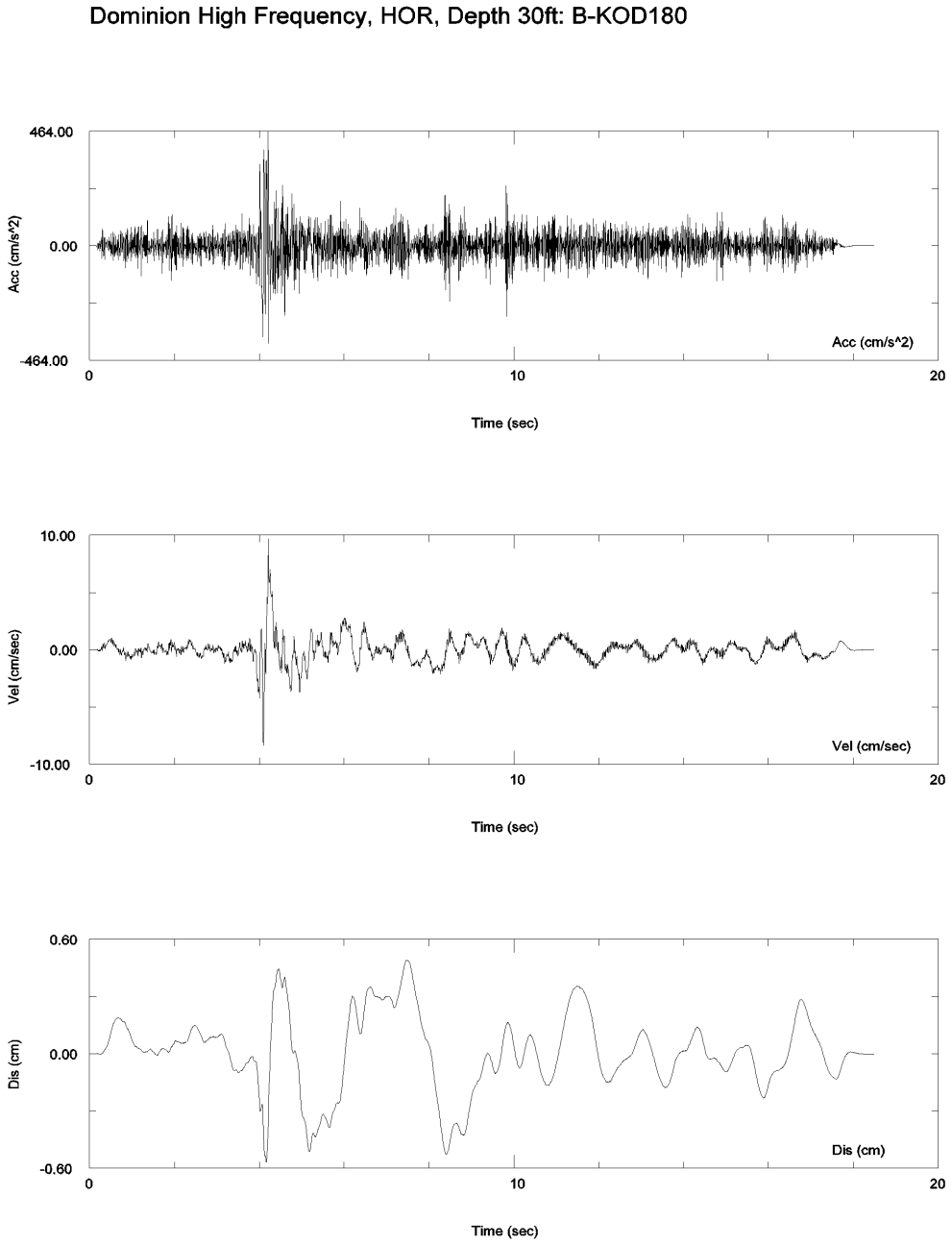

Figure 3.7-25. North Anna ESP Horizontal H1 Time Histories at ESBWR CB Base

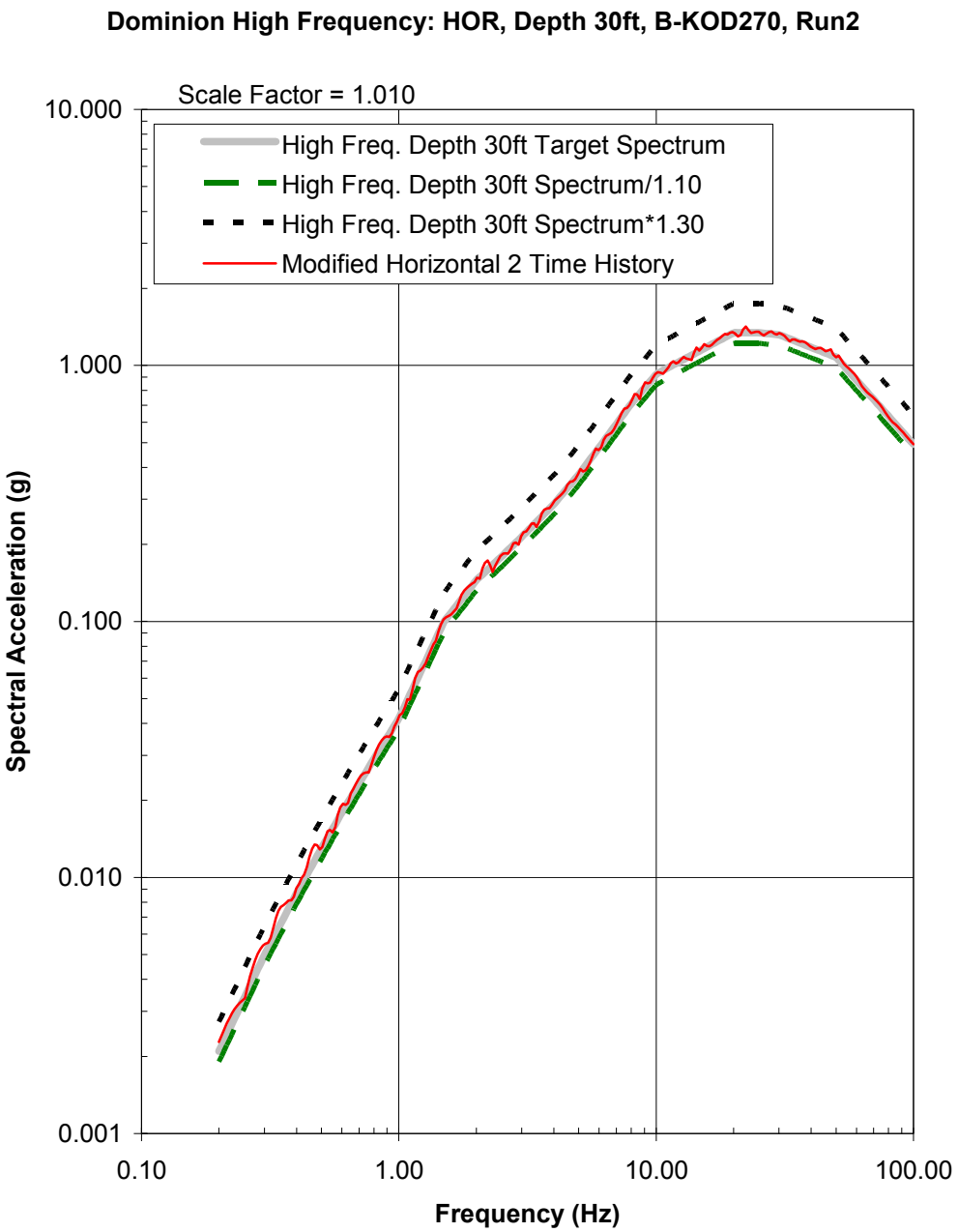

Note: B-KOD is the Livermore earthquake of January 27, 1980 recorded at the Kodak Building Site in San Ramon, California. "HOR" is "Horizontal".

Figure 3.7-26. North Anna ESP Horizontal H2 Target Spectrum at ESBWR CB Base

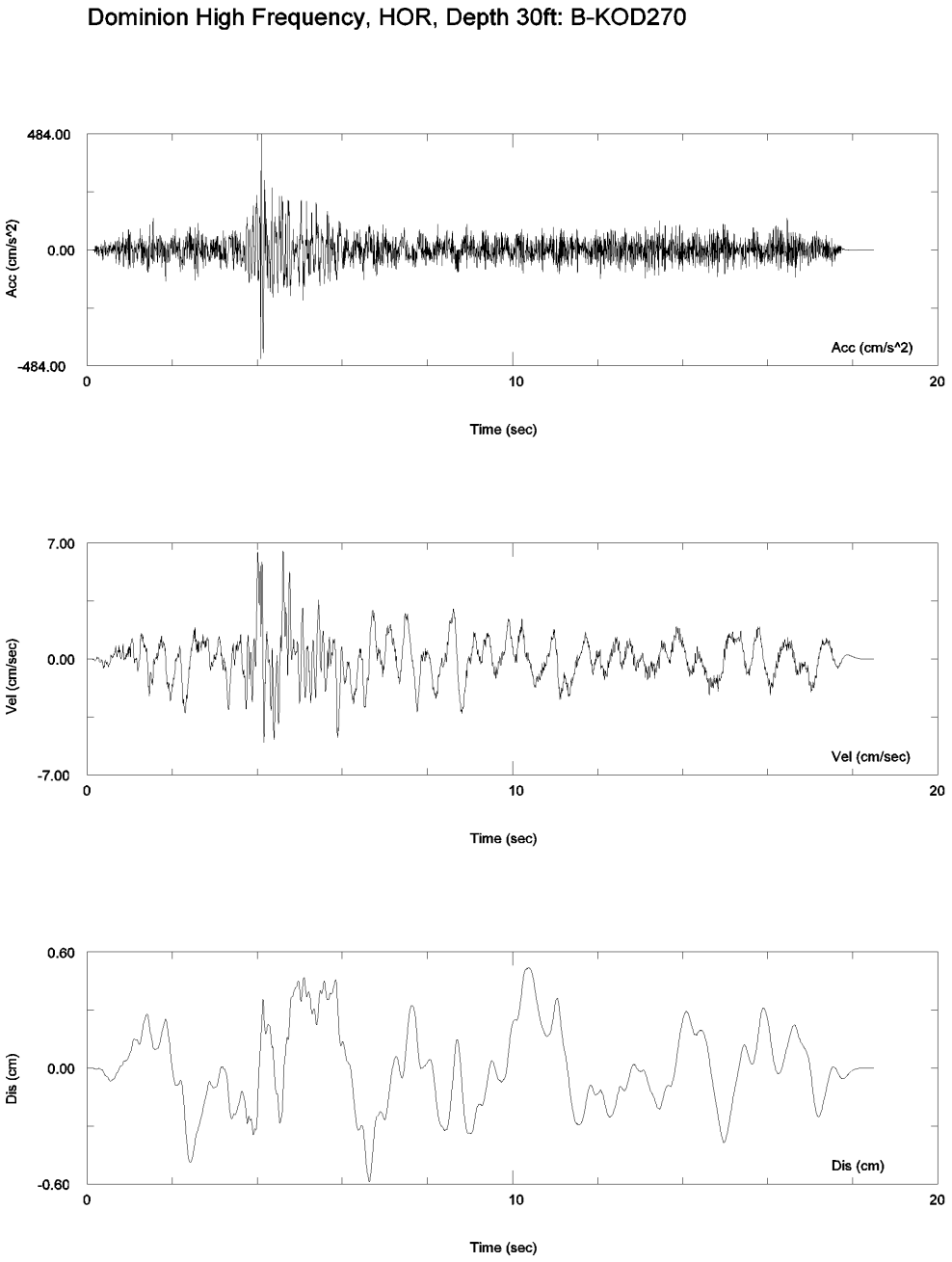

Figure 3.7-27. North Anna ESP Horizontal H2 Time Histories at ESBWR CB Base

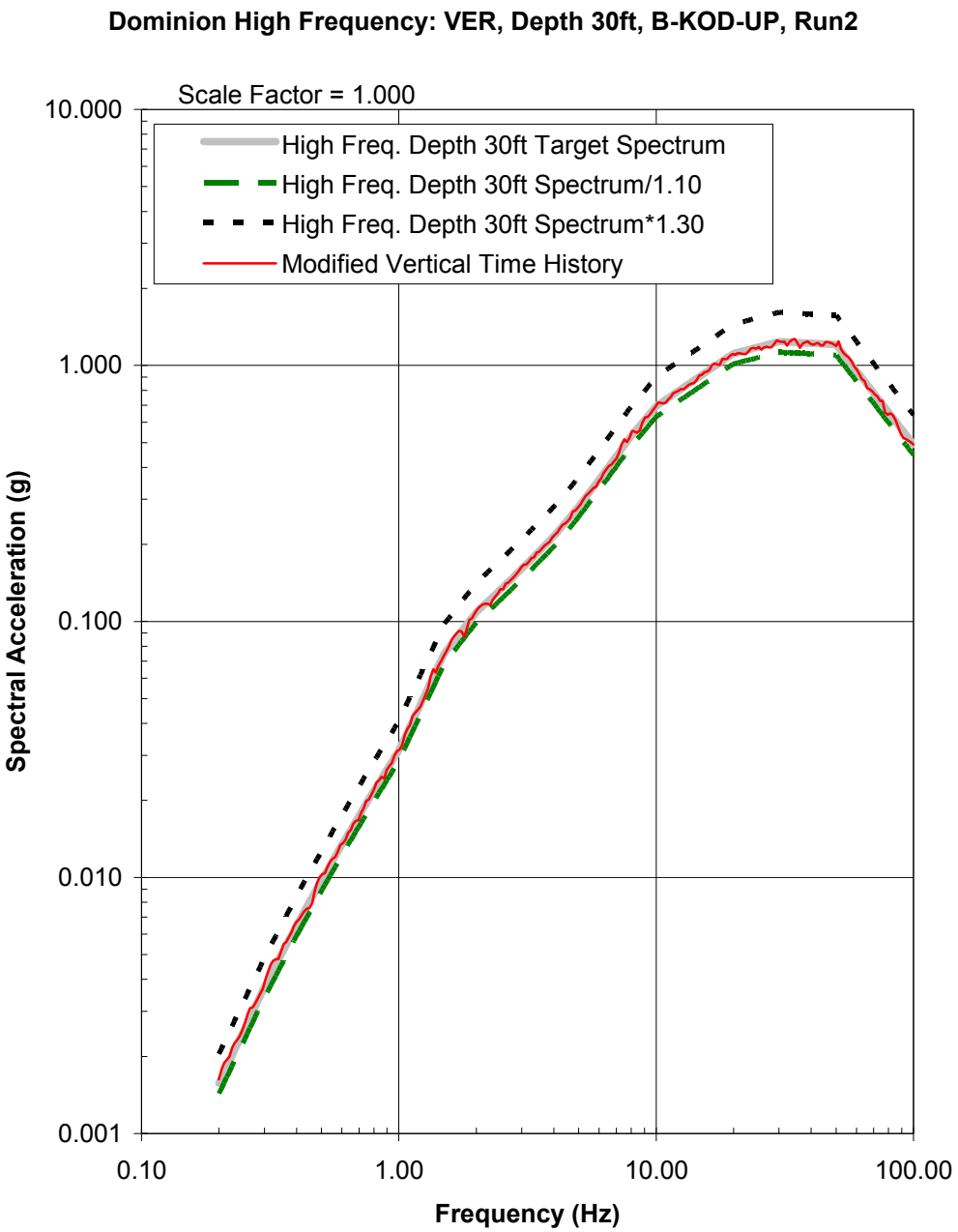

Note: B-KOD is the Livermore earthquake of January 27, 1980 recorded at the Kodak Building Site in San Ramon, California. "VER" is "Vertical".

Figure 3.7-28. North Anna ESP Vertical Target Spectrum at ESBWR CB Base

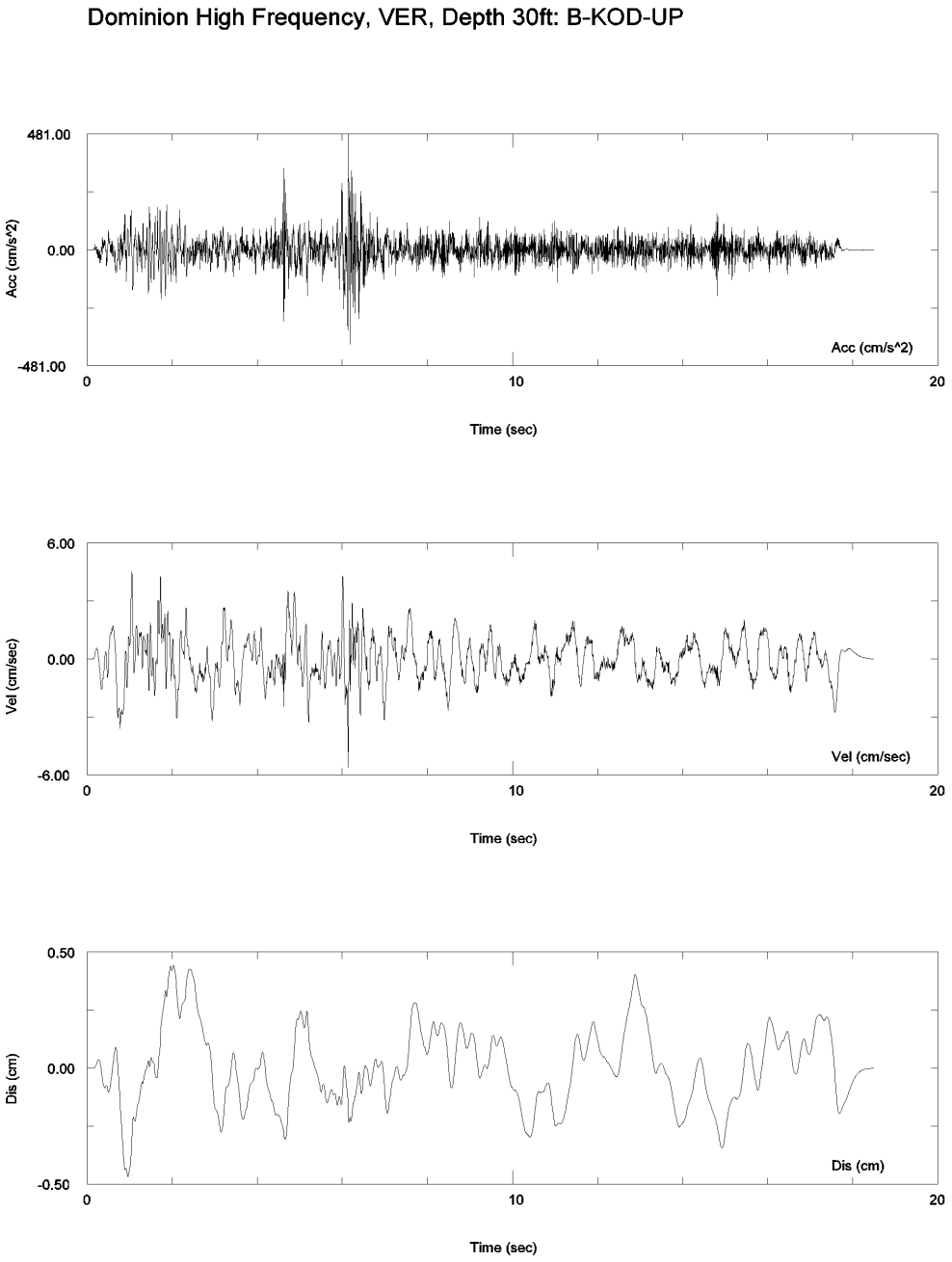

Figure 3.7-29. North Anna ESP Vertical Time Histories at ESBWR CB Base

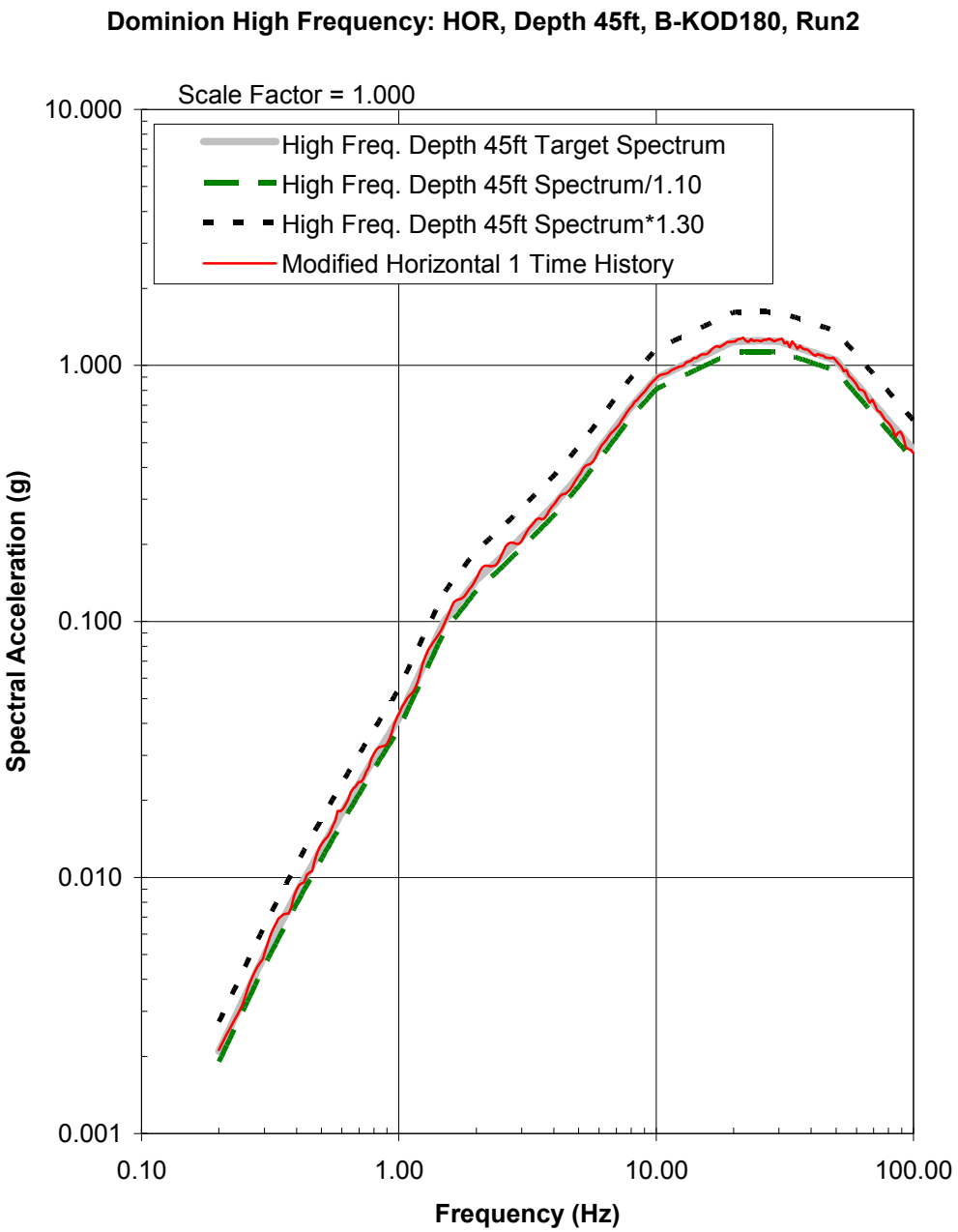

Note: B-KOD is the Livermore earthquake of January 27, 1980 recorded at the Kodak Building Site in San Ramon, California. "HOR" is "Horizontal".

Figure 3.7-30. North Anna ESP Horizontal H1 Target Spectrum at ESBWR RB/FB Base

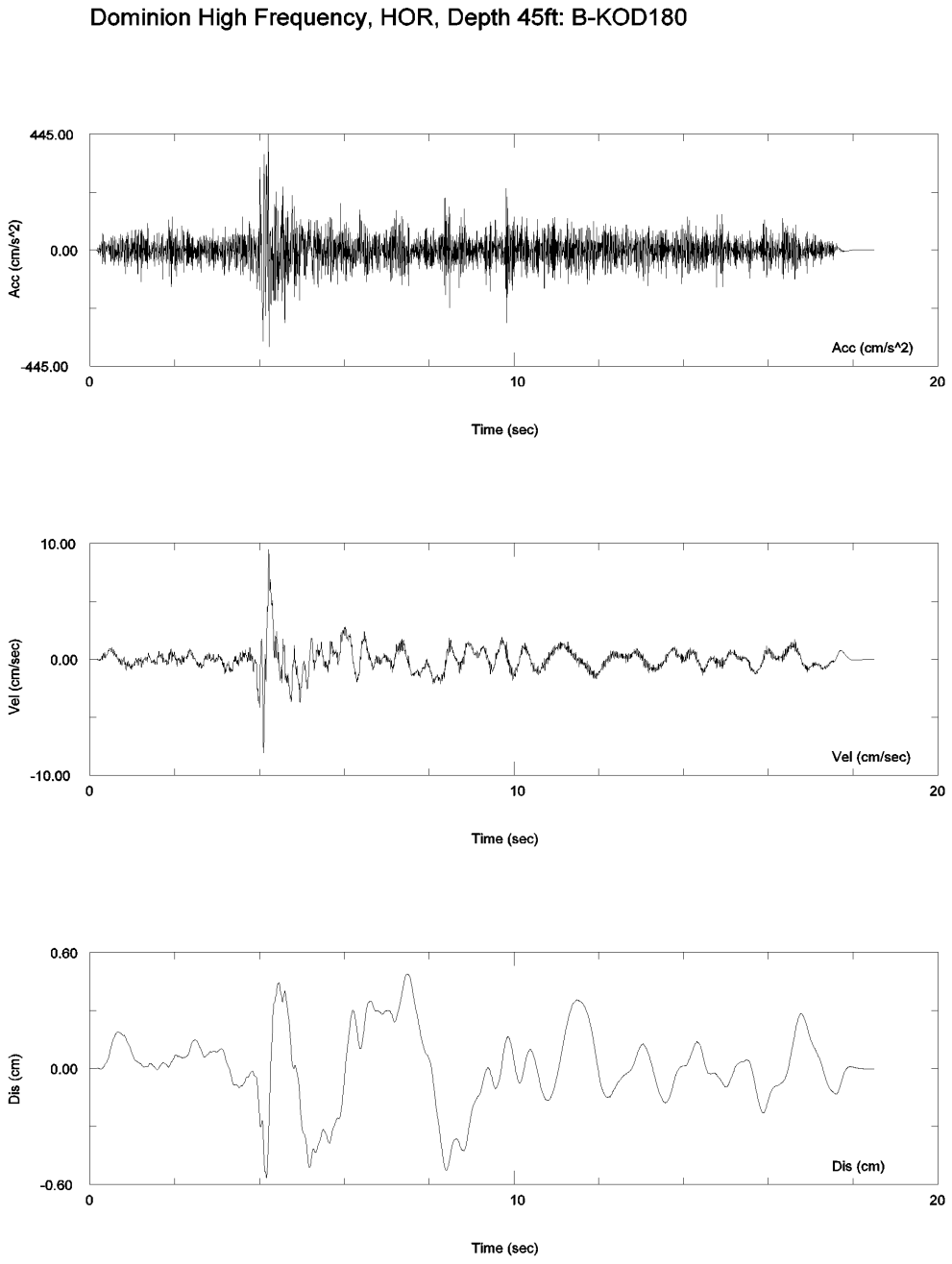

Figure 3.7-31. North Anna ESP Horizontal H1 Time Histories at ESBWR RB/FB Base

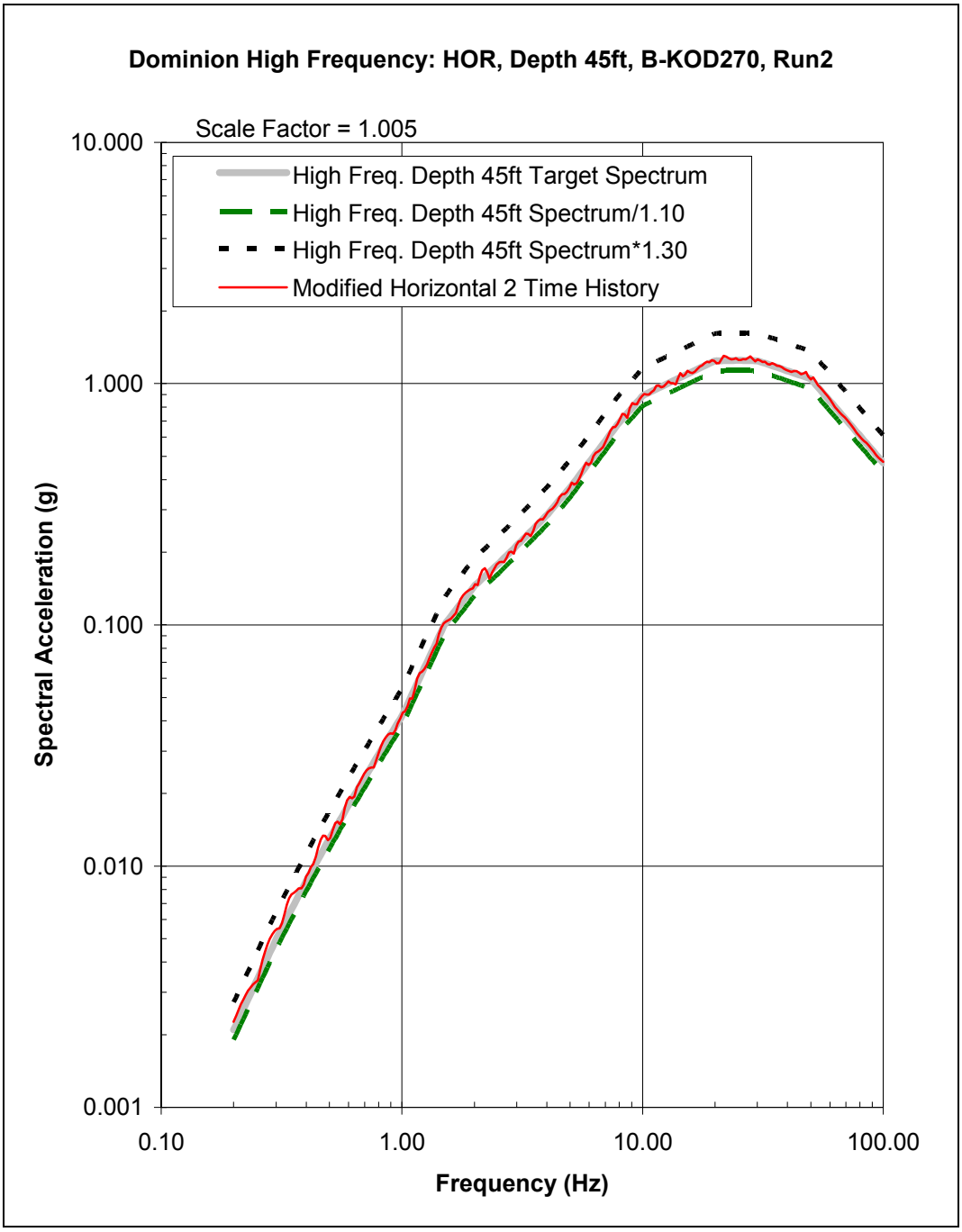

Note: B-KOD is the Livermore earthquake of January 27, 1980 recorded at the Kodak Building Site in San Ramon, California. "HOR" is "Horizontal".

Figure 3.7-32. North Anna ESP Horizontal H2 Target Spectrum at ESBWR RB/FB Base

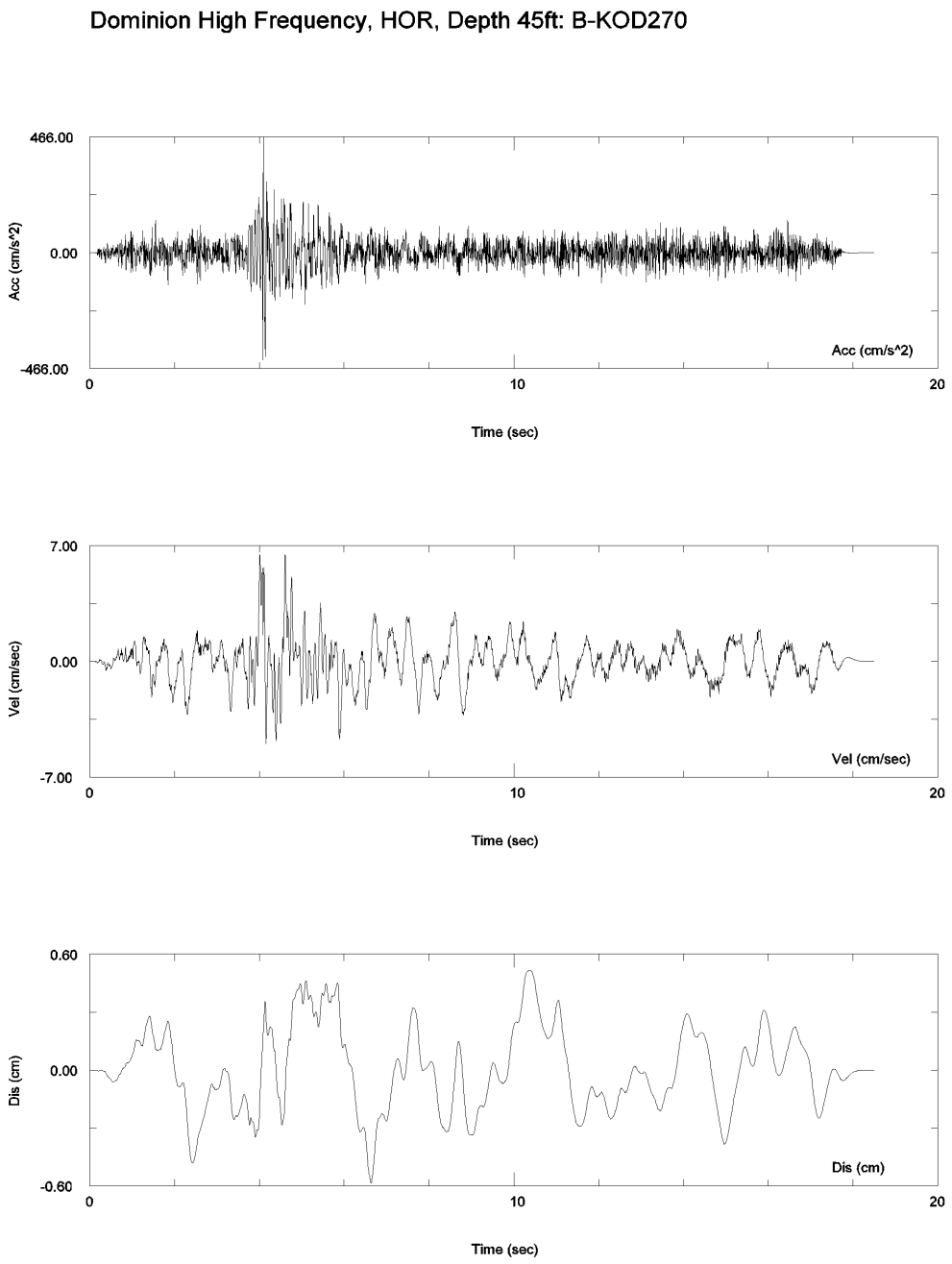

Figure 3.7-33. North Anna ESP Horizontal H2 Time Histories at ESBWR RB/FB Base

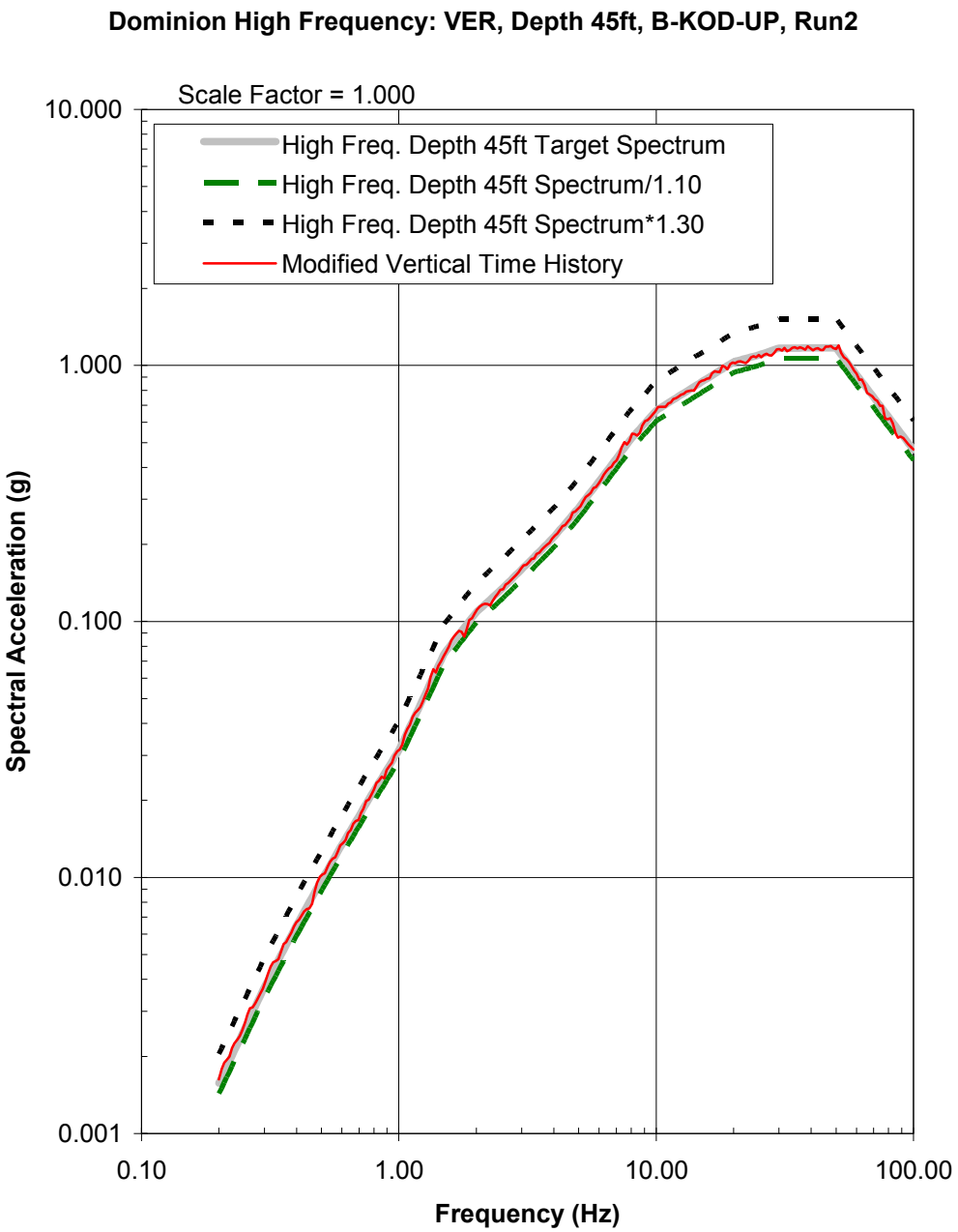

Note: B-KOD is the Livermore earthquake of January 27, 1980 recorded at the Kodak Building Site in San Ramon, California. "VER" is "Vertical".

Figure 3.7-34. North Anna ESP Vertical Target Spectrum at ESBWR RB/FB Base

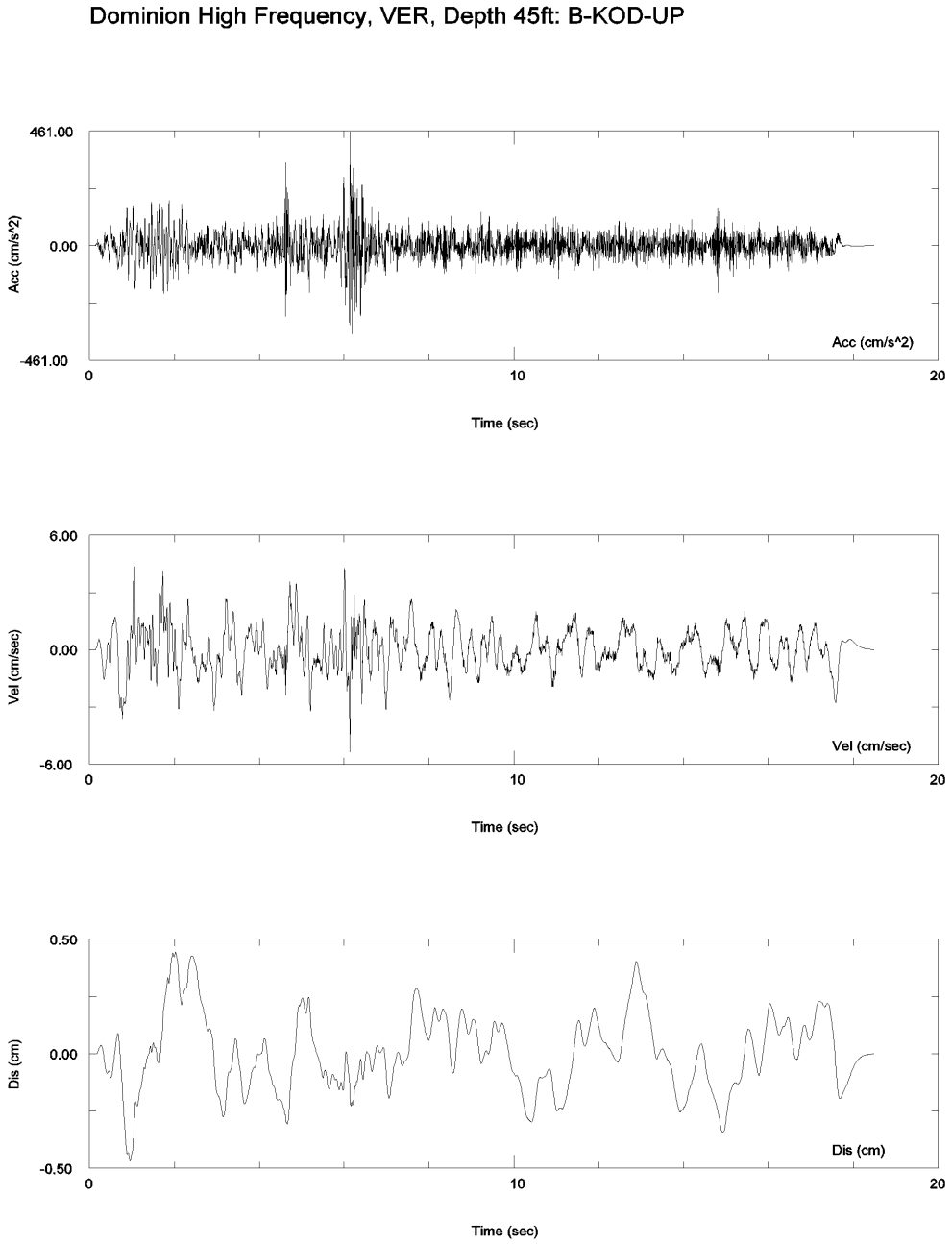

Figure 3.7-35. North Anna ESP Vertical Time Histories at ESBWR RB/FB Base

Figure 3.7-36. Not used.

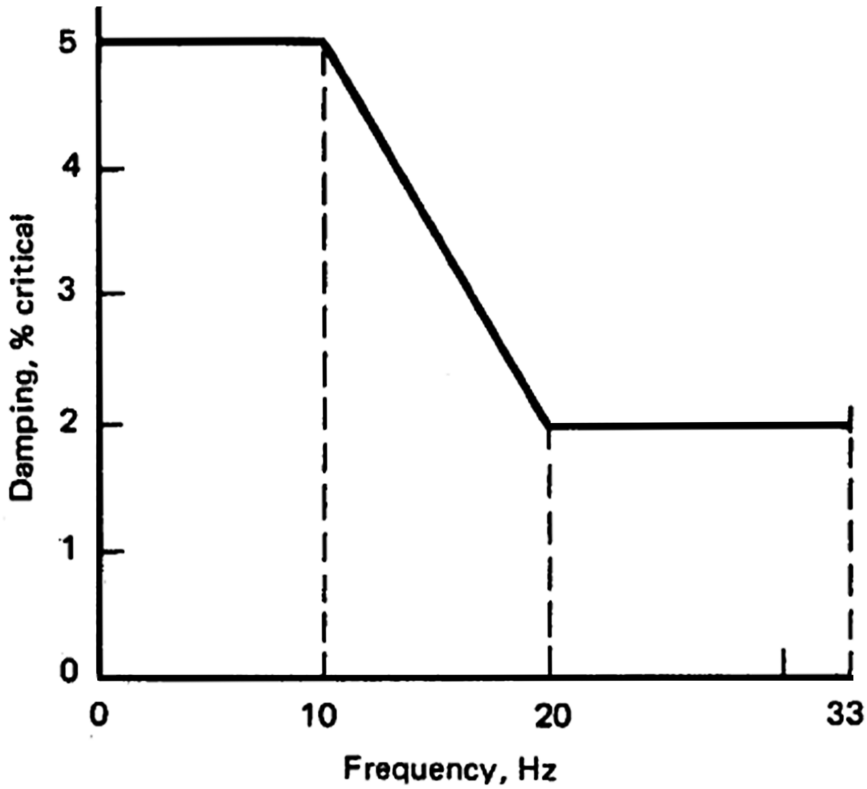

Notes:

As an alternative to the response spectra analysis using an envelope of the SSE response spectra at all support points (based on uniform support motion), frequency-dependent damping values shown in Figure 3.7-37 is used, subject to the following restrictions:

(1) When frequency-dependent damping is used, it is done completely and consistently. (For equipment other than piping, damping values specified in Regulatory Guide 1.61 are to be used.)

(2) The specified damping values are used only in those analyses in which current seismic spectra and procedures have been employed. Such use is to be limited to response spectral analyses. The acceptance of the use of the specified damping values with other types of dynamic analyses (e.g., time-history analyses or independent support motion method) requires further justification.

(3) When used for reconciliation work or support optimization of existing designs, the effects of increased motion on existing clearances and on-line mounted equipment should be checked.

(4) Frequency-dependent damping is not appropriate for analyzing the dynamic response of piping systems using supports designed to dissipate energy by yielding.

(5) Frequency-dependent damping is not applicable to piping in which stress corrosion cracking has occurred, unless a case-specific evaluation is provided and reviewed by the NRC staff.

(6) The damping values specified are applicable in analyzing piping response for seismic and other dynamic loads filtering through building structures in high frequency range beyond 33 Hz.

Figure 3.7-37. Alternative Damping Values for Response Spectra Analysis of ASME B&PV Code, Section III, Division 1 Class 1, 2, and 3, and ASME B31.1 Piping Systems

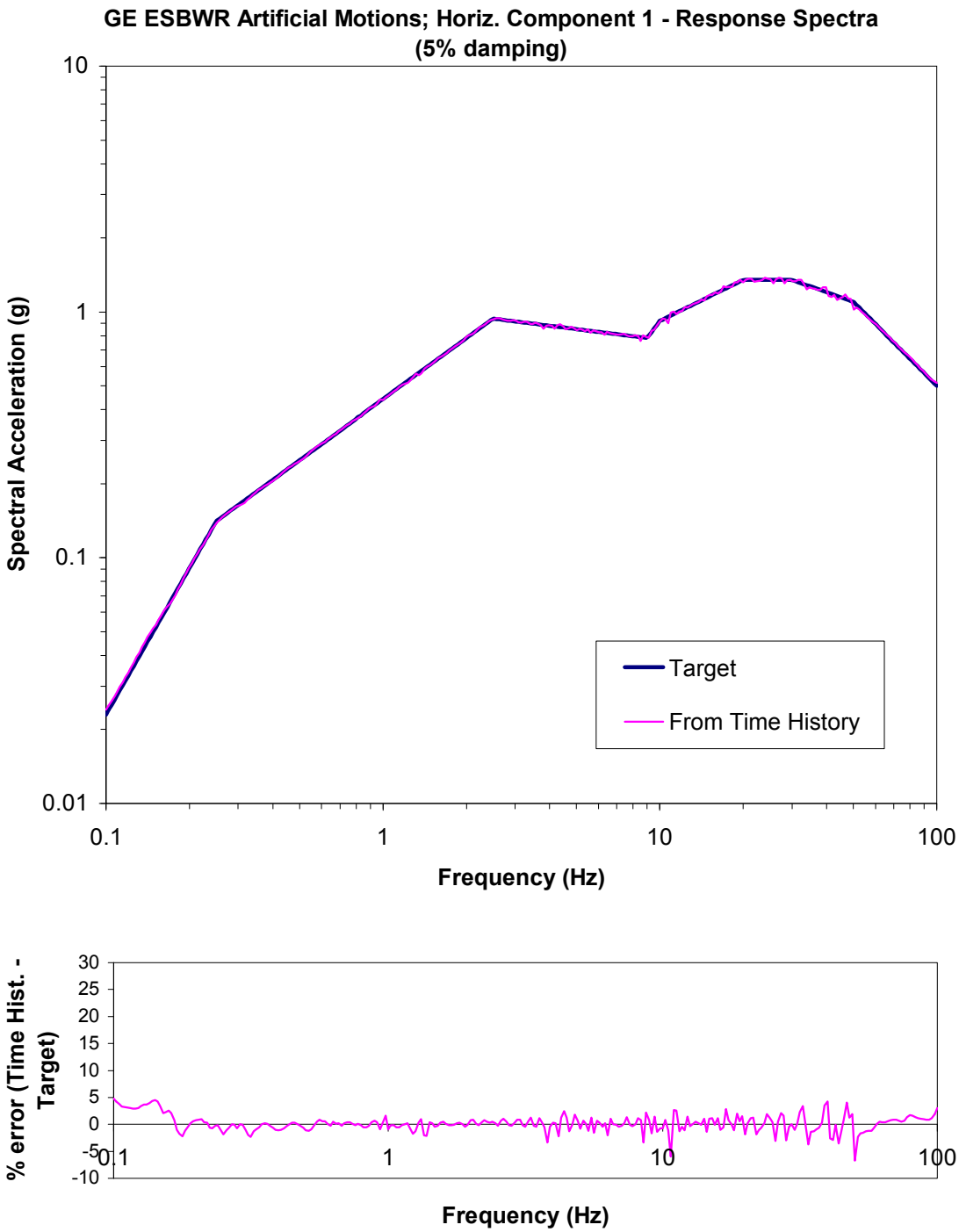

[ ]*

Figure 3.7-38. Single Envelope Spectrum Match – H1 Component

* Figures that are bracketed with an asterisk following the brackets are designated as Tier 2*. Prior NRC approval is required to change.

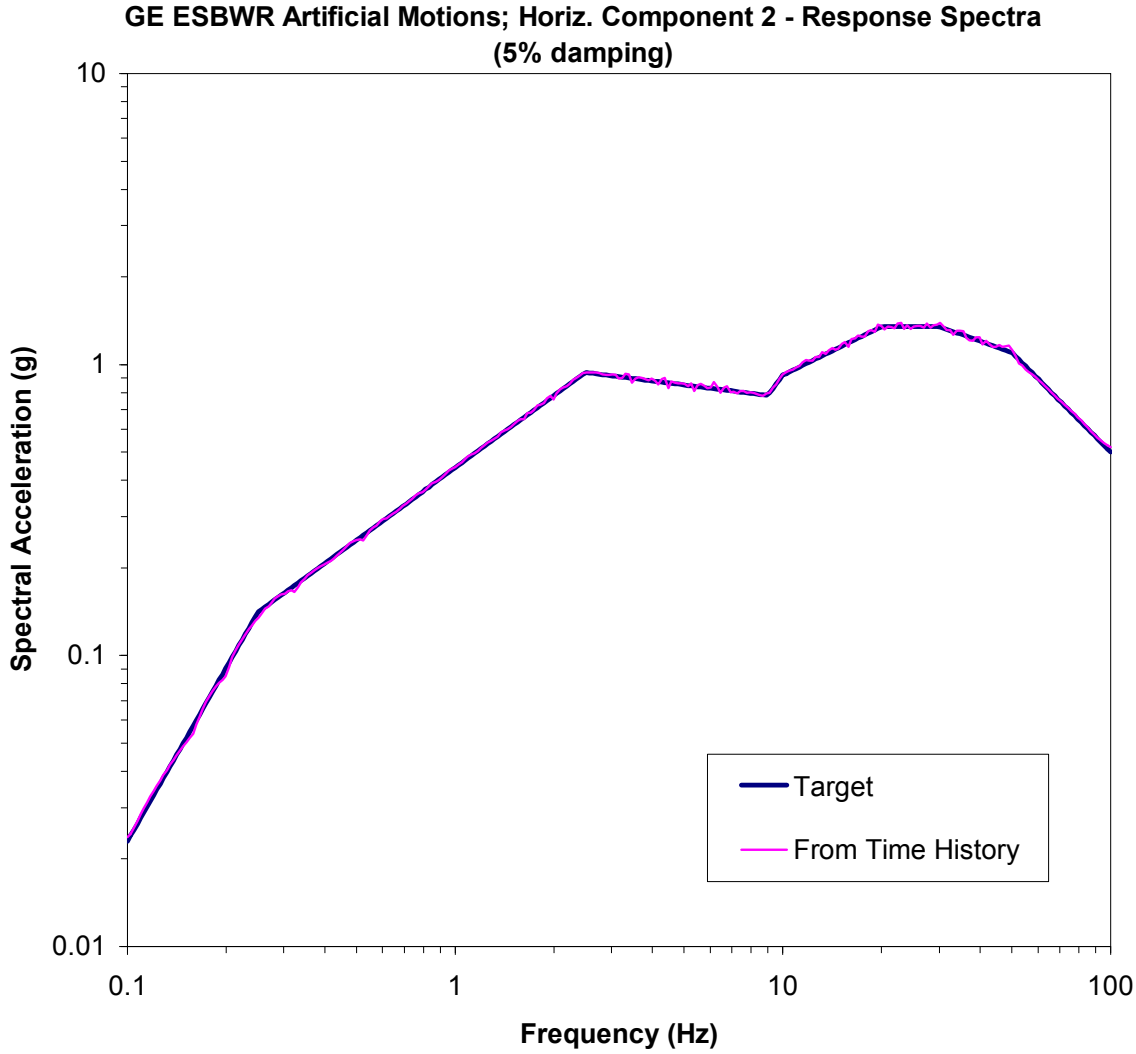

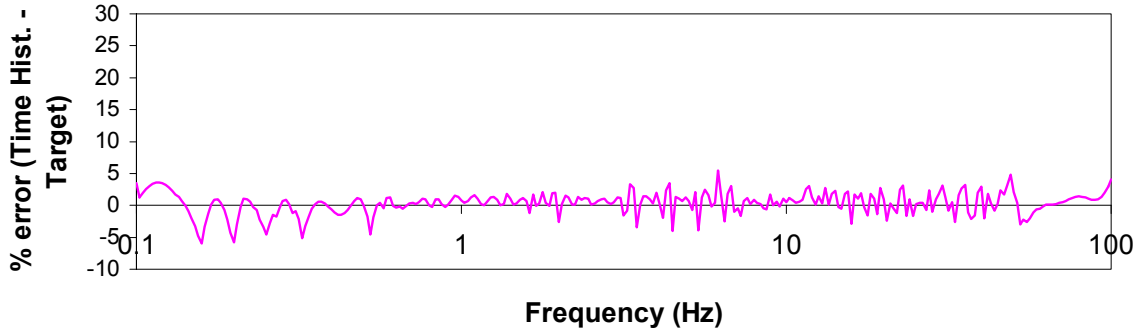

[ ]*

Figure 3.7-39. Single Envelope Spectrum Match – H2 Component

Figures that are bracketed with an asterisk following the brackets are designated as Tier 2. Prior NRC approval is required to change.

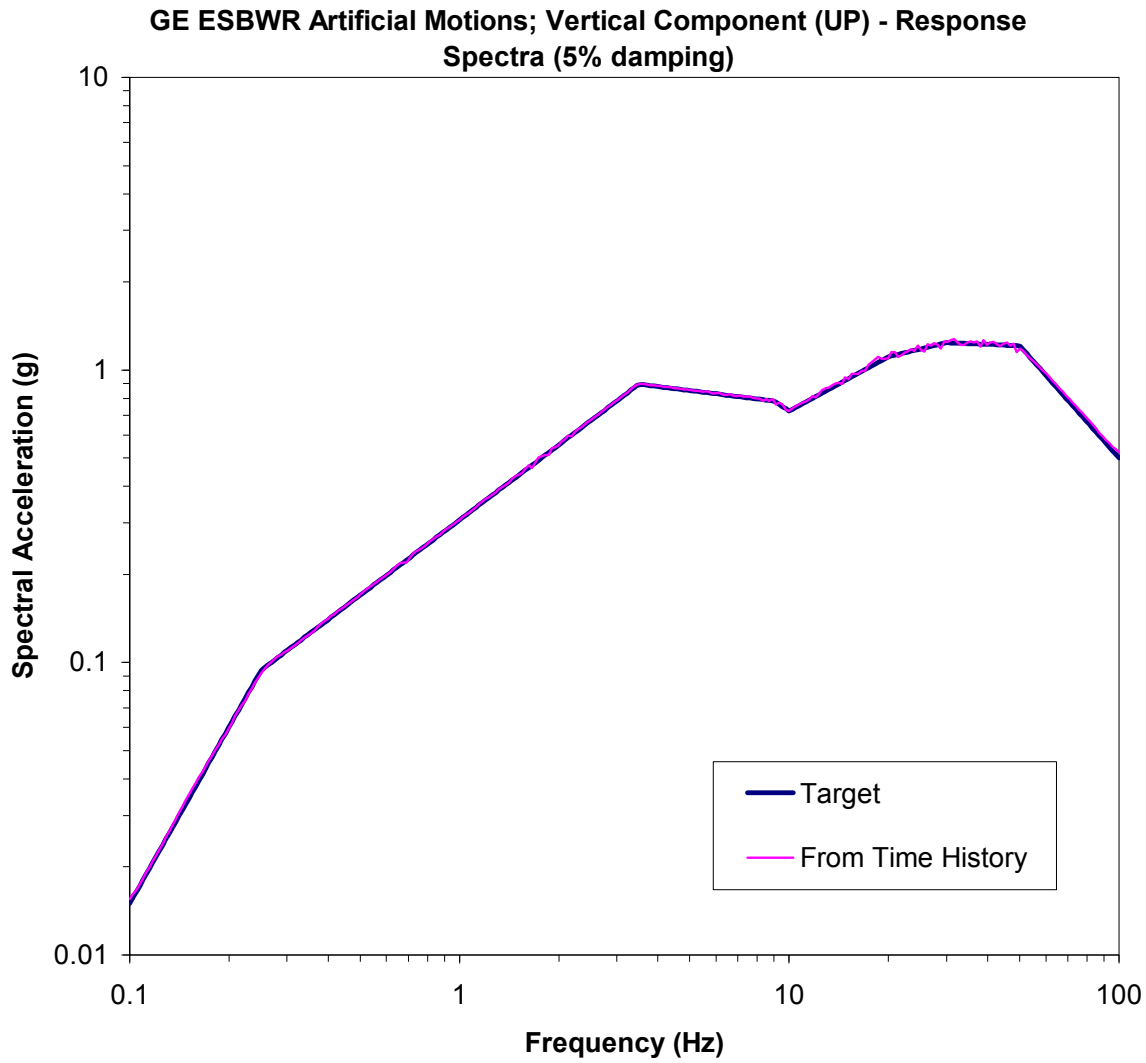

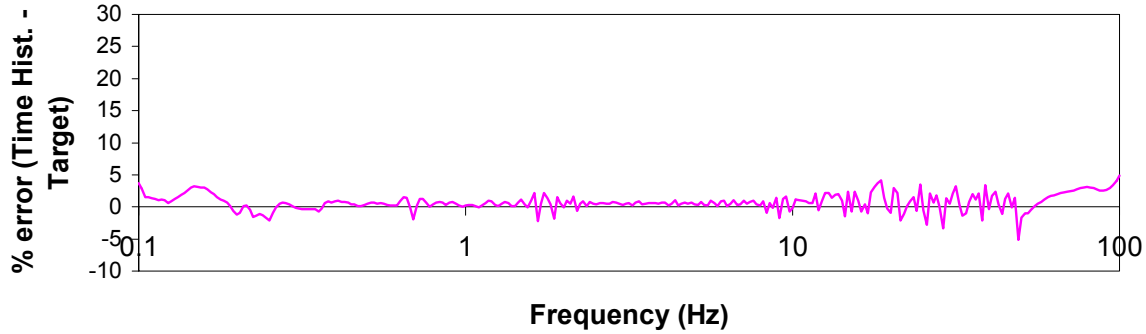

[ ]*

Figure 3.7-40. Single Envelope Spectrum Match – Vertical Component

Figures that are bracketed with an asterisk following the brackets are designated as Tier 2. Prior NRC approval is required to change.

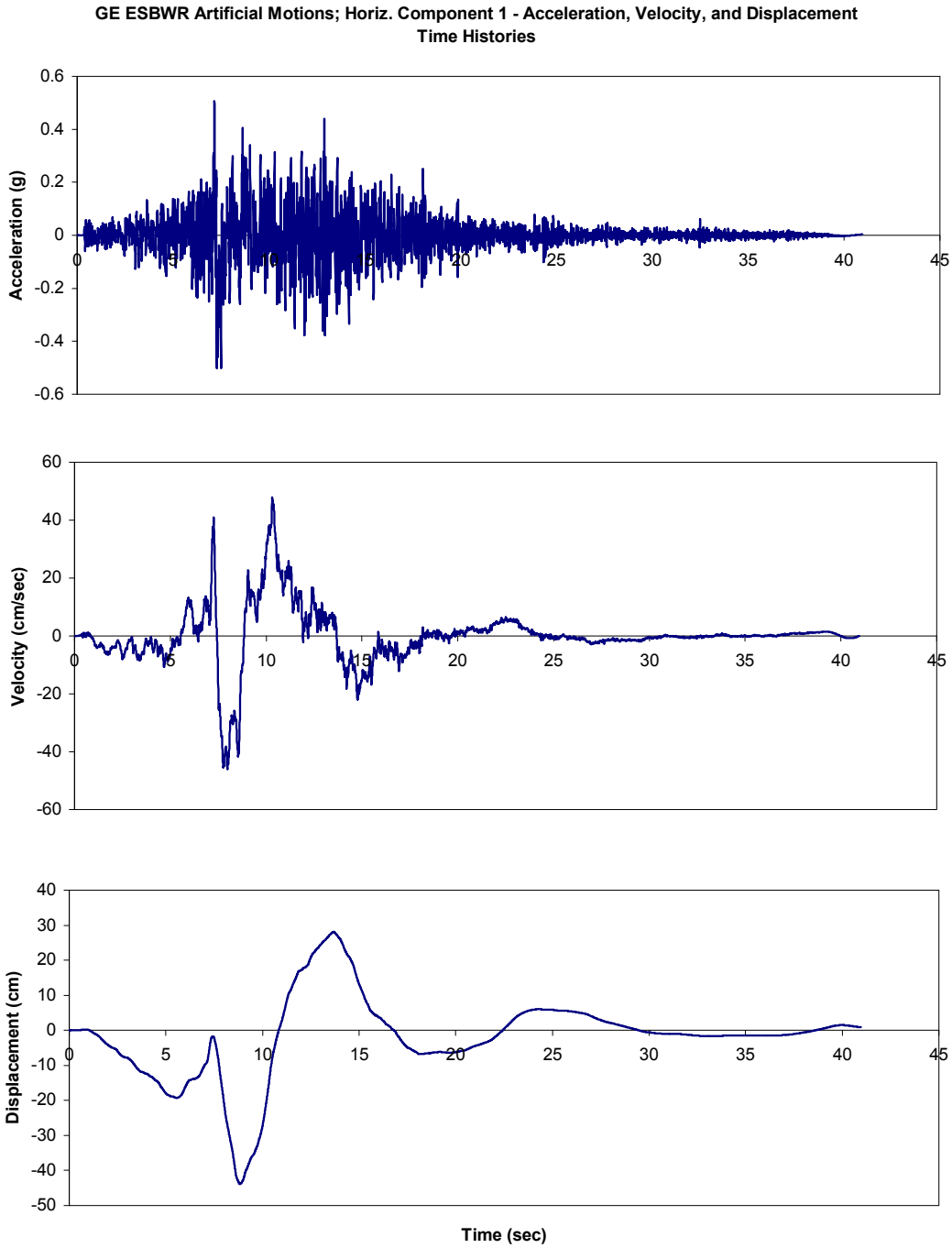

[ ]*

Figure 3.7-41. Single Envelope Time Histories – H1 Component

Figures that are bracketed with an asterisk following the brackets are designated as Tier 2. Prior NRC approval is required to change.

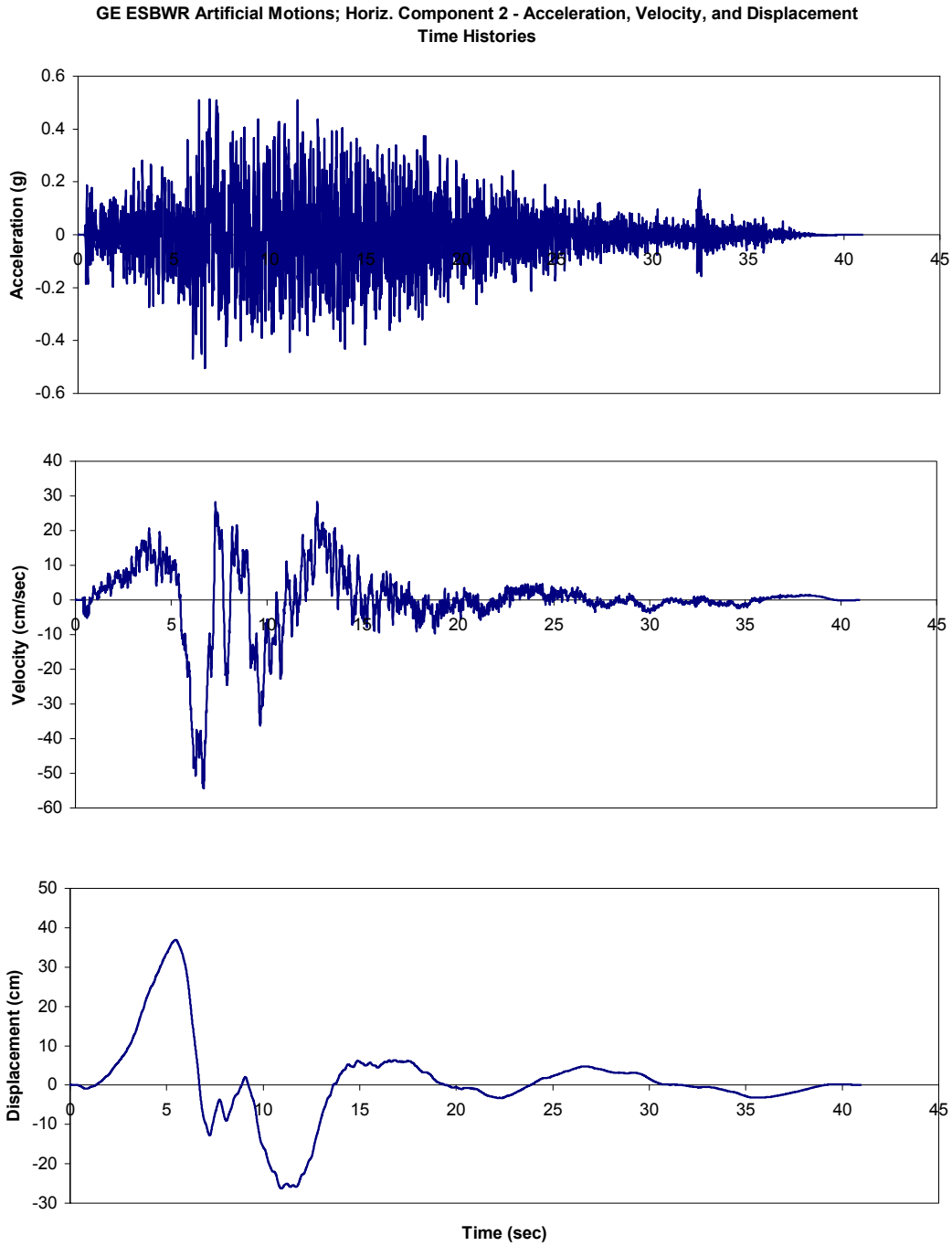

[ ]*

Figure 3.7-42. Single Envelope Time Histories – H2 Component

Figures that are bracketed with an asterisk following the brackets are designated as Tier 2. Prior NRC approval is required to change.

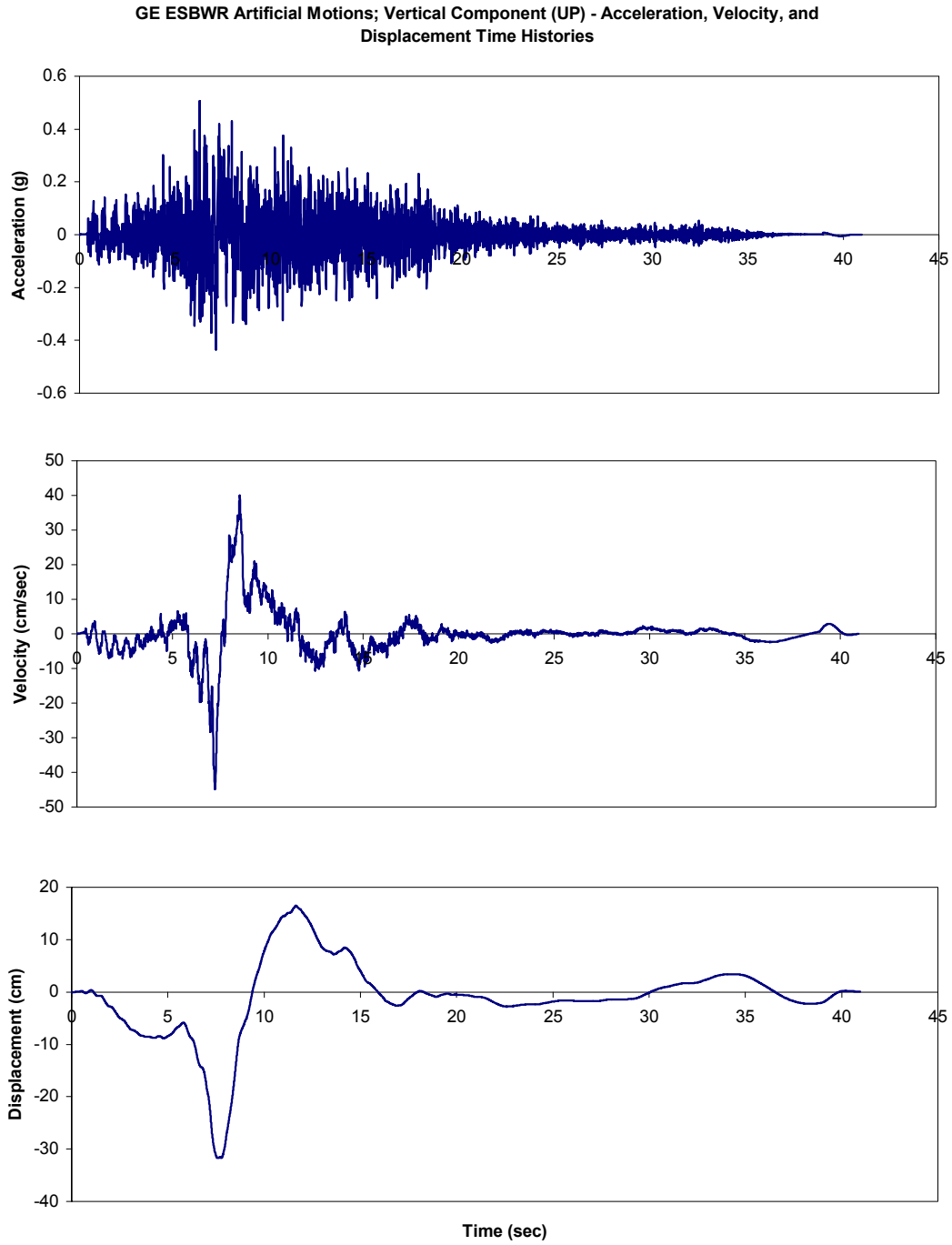

[ ]*

Figure 3.7-43. Single Envelope Time Histories – Vertical Component

Figures that are bracketed with an asterisk following the brackets are designated as Tier 2. Prior NRC approval is required to change.

3.8 SEISMIC CATEGORY I STRUCTURES

The Seismic Category I structures include the Concrete Containment, Reactor Building (RB), Control Building (CB), Fuel Building (FB) and Firewater Service Complex (FWSC).

3.8.1 Concrete Containment

The containment structure is designed to house the primary nuclear system and is part of the containment system, whose functional requirement is to confine the potential release of radioactive material in the event of a loss-of-coolant-accident (LOCA). The containment structure is totally enclosed by the RB. This subsection describes the concrete containment structure. Steel components of the containment that resist pressure and are not backed by structural concrete are discussed in Subsection 3.8.2. A detailed functional description of the containment system is presented in Section 6.2.

3.8.1.1 Description of the Containment

3.8.1.1.1 Concrete Containment

The containment is shown in the summary report contained in Appendix 3G Section 3G.1. Appendix 3G Section 3G.1 contains a more detailed description of the containment and the analytical models, inputs, analytical procedures, figures, results from controlling load combinations, components with controlling concrete stresses, reinforcement stresses, and liner strains for the concrete containment vessel.

The containment is a low-leakage reinforced concrete structure with an internal steel liner in the drywell and wetwell to serve as a leaktight membrane. The containment is a cylindrical shell structure, which consists of the Reactor Pressure Vessel (RPV) pedestal, the containment cylindrical wall, the top slab, the suppression pool slab and the foundation mat. The containment is divided by the diaphragm floor and the vent wall into a drywell (upper and lower) and a wetwell. The top slab of the concrete containment is an integral part of the Isolation Condenser/Passive Containment Cooling System (IC/PCCS) pools (including expansion pools), the buffer pool, which is also used to store the dryer, and the equipment storage pool, which is also used to store the chimney partitions and the separator. The pool girders, which serve as barriers of the pools, rigidly connect the top slab and the RB walls. The RB floors that surround the containment walls and walls that are under the suppression pool floor slab are also integrated structurally with the concrete containment. The containment foundation mat is continuous with the RB foundation mat, and the FB as well. The containment and the structures integrated with the containment are constructed of cast-in-place, reinforced concrete.

The configuration of the containment is shown in Figure 3.8-1. Additional peripheral volumes for anchoring of the containment reinforcements are considered within the code jurisdictional boundary and constructed in accordance with the rules of ASME Code Section III, Division 2. The boundaries of the additional peripheral volumes are determined based on the required development lengths of containment reinforcements. [*The key dimensions of the containment are summarized in Table 3.8-1.*]*

The containment foundation mat is a flat plate (see Table 3.8-13 and Figure 3.8-1). The foundation mat reinforcement consists of a top layer of reinforcement, a bottom layer of

reinforcement, and vertical shear reinforcement. The bottom layer of reinforcement is arranged in a rectangular grid. The top layer of reinforcement is arranged in a rectangular grid at the center of the mat and then radiates outward in a polar pattern in order to avoid interference with the RPV pedestal reinforcement.

The containment wall and the RPV pedestal are right circular cylinders. The main reinforcement in the wall consists of inside and outside layers of hoop and vertical reinforcement and radial bars for shear reinforcement.

Reinforcement is placed at major discontinuities in the wall, including the vicinity of the wall intersection with the foundation mat, the top slab and the suppression pool slab, around major piping penetrations, equipment hatches and personnel airlocks. Figure 3.8-2 shows a sketch of reinforcement in the reinforced concrete containment vessel (RCCV) wall around equipment hatches and personnel airlocks.

The containment top slab and the suppression pool slab are circular plates which have uniform thickness.

The reinforcement of the top slab and the suppression pool slab consist of top and bottom layers of main reinforcement and vertical tie bars for shear reinforcement. The top and bottom layers of main reinforcement are arranged in a rectangular grid in the top slab. The main reinforcement of the suppression pool slab is arranged in the radial and circumferential directions.

Regarding steel members such as structural steel shapes, piping supports or commodity supports attached to the exterior containment, Figure 3.8-4 provides a typical external containment plate support with embedment.

Text sections that are bracketed and italicized with an asterisk following the brackets are designated as Tier 2. Prior NRC approval is required to change.

3.8.1.1.2 Containment Liner Plate

The internal surface of the containment is lined with welded steel plate to form a leaktight barrier. The liner plate is fabricated from carbon steel, except that stainless steel plate or clad is used on wetted surfaces of the wetwell and Gravity-Driven Cooling System (GDCS) pools.

The liner plate is stiffened by use of structural sections and plates to carry the design loads and to anchor the liner plate to the concrete, as shown in Appendix 3G Subsection 3G.1.5.4. The liner plate is thickened locally and additional anchorage is provided at major structural attachments such as penetration sleeves, structural beam brackets, the vent wall, RPV support bracket and the Safety Relief Valve (SRV) quencher support connection to the suppression pool slab, and the diaphragm floor connection to the containment wall. Figure 3.8-5 shows the typical detail for the quencher anchorage. The design forces of liner plates are obtained from the analysis directly, and the anchorage design is performed in accordance with ACI 349-01 Appendix B.

Regarding steel members such as structural steel shapes, piping supports or commodity supports inside containment, Figure 3.8-3 shows a typical support plate with anchors embedded in the concrete containment and integrally welded to the containment liner. The dimensions of the plate and the number of anchors depend on the loads for each support. They are designed in accordance with ANSI/AISC N690 and ACI 349 Appendix B.

The erection of the liner is performed using standard construction procedures. The containment wall liner and top slab liner are used as a form for concrete placement. The liner on the bottom of the wetwell and lower drywell is placed after the slab concrete is in place.

3.8.1.1.3 Containment Boundary

[*The jurisdictional boundary for application of Section III, Division 2 of the ASME Code to the concrete containment is shown in Figure 3.8-1. The boundary extends to the:*

(1) Outside diameter of the RPV pedestal from the foundation mat to the suppression pool floor slab.

(2) Outside diameter of the containment wall from the suppression pool floor slab to containment top slab.

(3) Basemat circular plate under the RPV pedestal (the foundation basemat is a single basemat for the RB, the FB and the concrete containment)..

(4) Suppression pool slab from the inside diameter of the RPV pedestal to the outside diameter of the containment wall.

(5) Containment top slab from the drywell head opening to the outside diameter of the containment.

The above are included in the ASME Code jurisdictional boundary for design, material, fabrication, inspection, testing, stamping, etc., requirements of the code. However, any other structural components which are integral with the containment structure are treated the same as the containment as far as loads and loading combinations are concerned in the design. Similarly, the RB floor slabs that are integrated with the containment are not included in the ASME Code jurisdictional boundaries, but are treated the same as the containment only as far as loads and load combinations are concerned.]*

The vent wall and diaphragm floor slab, which partition the containment into drywell and wetwell, are not part of the containment boundary. The vent wall and the diaphragm floor slab, steel structures filled with concrete, are designed according to codes given in Subsection 3.8.3.

Those portions of the structure outside the indicated Code jurisdictional boundary are designed, analyzed and constructed as indicated in Subsection 3.8.4. The analytical model includes the containment, RB, FB and all the integrally connected structures and therefore includes continuity effects in the analysis.

Text sections that are bracketed and italicized with an asterisk following the brackets are designated as Tier 2. Prior NRC approval is required to change.

3.8.1.2 Applicable Codes, Standards, and Specifications

The design, fabrication, construction, testing, and in-service inspection of the concrete containment conforms to the applicable codes, standards, specifications, and regulations listed below, except where specifically stated otherwise.

3.8.1.2.1 Regulations

(1) Code of Federal Regulations, Title 10, Energy, Part 50, "Domestic Licensing of Production and Utilization Facilities."

3.8.1.2.2 Construction Codes of Practice

[*Table 3.8-9 Items 1 and 3.*]*

Text sections that are bracketed and italicized with an asterisk following the brackets are designated as Tier 2. Prior NRC approval is required to change.

3.8.1.2.3 General Design Criteria, Regulatory Guides, and Industry Standards

(1) 10 CFR 50, Appendix A, "General Design Criteria for Nuclear Power Plants", Criteria 1, 2, 4, 16 and 50. Conformance is discussed in Section 3.1.

(2) [*Table 3.8-9 Items 29, 30, 31 and 33*]*

(3) Industry Standards

Only nationally recognized industry standards such as those published by the ASTM and the ANSI as referenced by the Applicable Codes, Standards, and Regulations are used.

Text sections that are bracketed and italicized with an asterisk following the brackets are designated as Tier 2. Prior NRC approval is required to change.

3.8.1.3 Loads and Load Combinations

The containment is analyzed and designed for all credible conditions of loading, including normal loads, preoperational testing loads, loads during severe environmental conditions, loads during extreme environmental conditions and loads during abnormal plant conditions.

3.8.1.3.1 Normal Loads

(1) D — Dead load of the structure and equipment plus any other permanent loads, including vertical and lateral pressures of liquids.

(2) L — Live loads, including any moveable equipment loads and other loads that vary in intensity and occurrence, such as forces exerted by the lateral pressure of soil. Live load for structures inside the containment is 9.6 kPa (200 psf) during outages and laydown operations. The loads are applied to the containment interior floors, except the suppression pool floor slab.

(3) T_o — Thermal effects and loads during normal operating, startup or shutdown conditions, including liner plate expansion, equipment and pipe reactions, and thermal gradients based on the most critical transient or steady- state thermal gradient.

(4) R_o — Pipe reactions during normal operating or shutdown conditions based on the most critical transient or steady-state conditions.

(5) P_o — Pressure loads resulting from the pressure difference between the interior and exterior of the containment, considering both interior pressure changes because of heating or cooling and exterior atmospheric pressure variations.

(6) Construction Loads — Loads that are applied to the containment from start to completion of construction. The definitions for D, L and T_o given above are applicable, but are based on actual construction methods and/or conditions.

(7) SRV — Safety relief valve loads. Oscillatory dynamic pressure loadings resulting from discharge of SRVs into the suppression pool.

3.8.1.3.2 Preoperational Testing Loads

(1) P_t — Test loads are loads which are applied during the Structural Integrity Test (SIT) or Integrated Leak Rate Test (ILRT).

(2) T_t — Thermal effects and loads during the SIT or ILRT.

3.8.1.3.3 Severe Environmental Loads

W —Loads indirectly transmitted by the design wind specified for the plant site as defined in Section 3.3.

3.8.1.3.4 Extreme Environmental Loads

(1) E'— Safe shutdown earthquake (SSE) loads as defined in Section 3.7 including pool sloshing loads.

(2) W' —Loads indirectly transmitted by the tornado specified in Section 3.3.

3.8.1.3.5 Abnormal Plant Loads

(1) R_a — Pipe reactions (including R_o) from thermal conditions generated by a LOCA.

(2) T_a — Thermal effects (including T_o) and loads generated by a LOCA.

(3) P_a — Design accident pressure load within the containment generated by a LOCA, based upon the calculated peak pressure with an appropriate margin.

(4) Y — Local effects on the containment due to a LOCA. The local effects include the following:

a. Y_r — Load on the containment generated by the reaction of a ruptured high-energy pipe during the postulated event of the Design Basis Accident (DBA). The time-dependent nature of the load and the ability of the containment to deform beyond yield is considered in establishing the structural capacity necessary to resist the effects of Y_r.

b. Y_j — Load on the containment generated by the jet impingement from a ruptured high-energy pipe during the postulated event of the DBA. The time-dependent nature of the load and the ability of the containment to deform beyond yield is considered in establishing the structural capacity necessary to resist the effects of Y_j.

c. Y_m — The load on the containment resulting from the impact of a ruptured high-energy pipe during the DBA. The type of impact (e.g., plastic or elastic), together with the ability of the containment to deform beyond yield, is considered in establishing the structural capacity necessary to resist the impact.

(5) CO — An oscillatory dynamic loading (condensation oscillation) on the suppression pool boundary due to steam condensation at the vent exits during the period of high steam mass flow through the vents following a LOCA.

(6) CHUG — An oscillatory dynamic loading (chugging) in the top vent and on the suppression pool boundary due to steam condensation inside the top vent or at the top vent exit during the period of low steam mass flow in the top vent following a LOCA.

(7) PS — Pool swell bubble pressure on the suppression pool boundary due to a LOCA.

(8) DET - Detonation Loading specifically on the ICS and PCCS Condensers, including drain piping and vent piping. This loading can occur sporadically after a LOCA during the first 72 hours.

3.8.1.3.6 Load Combinations for the Containment Structure and Liner Plate

[*The containment structure is designed using the loads, load combinations, and load factors listed in Table 3.8-2. Table 3.8-2 complies with Table CC-3230-1 of the ASME Code Section III Division 2 Subsection CC.*

Loads and load combinations listed in Table 3.8-2 are used for the design of the steel liner and liner anchors, but the load factor for all loads in the load combinations is 1.0.]*

As for seismic loads, the maximum co-directional responses to each of the excitation components are combined by the SRSS method.

Text sections that are bracketed and italicized with an asterisk following the brackets are designated as Tier 2. Prior NRC approval is required to change.

3.8.1.4 Design and Analysis Procedures

This section describes the analytical and design procedures used in designing the containment.

3.8.1.4.1 Containment Cylindrical Wall, Top Slab, and Foundation Mat

3.8.1.4.1.1 Analytical Methods

The containment structure is analyzed by the use of the linear elastic finite element computer program NASTRAN described in Appendix 3C. The containment, RB and FB layout utilizes an integrated structural system. The structure is idealized as a three-dimensional assemblage of beam elements, and isoparametric membrane-bending plate elements.

The finite element analysis (FEA) model of the containment, RB and FB includes the whole structure. The details of the global FEA model are described in Appendix 3G Subsection 3G.1.4.1.

The foundation soil is simulated by a set of horizontal and vertical springs. The soil spring constraints are calculated based on the properties of the soil spring used in the soil–structure interaction (SSI) analysis model, which is described in Appendix 3A. The constraints by soil surrounding the RB and FB are neglected in the FEA model.

3.8.1.4.1.1.1 Nonaxisymmetrical Loads

Nonaxisymmetrical loads imposed on the containment and its connected structures, each of which may bear different kinds of loadings, include the following as defined in Subsection 3.8.1.3:

(1) Tornado wind (indirect)

(2) Design wind (indirect)

(3) SSE

(4) Local pipe rupture forces, including local compartmental pressures from ruptured pipes in compartments inside or outside the containment

(5) LOCA hydrodynamic pressures in the suppression pool

(6) SRV discharge in the suppression pool

(7) Loadings from embedded steel brackets in the wall and top slab

The containment wall is shielded from the design wind and tornado by the RB, which completely encloses the structure. Forces from the design wind and tornado are transmitted directly to the containment wall through the RB connections.

The LOCA and SRV hydrodynamic pressures on the suppression pool boundaries as described in Appendix 3B are applied as equivalent static pressures equal to the dynamic peak value times dynamic load factor (DLF). The LOCA and SRV dynamic analyses are described in Appendix 3F.

3.8.1.4.1.1.2 Axisymmetrical Loads

Axisymmetrical loads imposed on the containment and its connected structures include the following, and are as defined in Subsection 3.8.1.3:

(1) Structure dead load

(2) Surcharge loads from adjacent structures

(3) Hydrostatic load from probable maximum flood

(4) Hydrostatic load from normal site water table

(5) Local dead and live loads from embedded brackets, treated as axisymmetrical loads for overall structural response

(6) Dead and live loads from internal structures imposed on the suppression pool slab

(7) Normal operating thermal gradients

(8) Abnormal plant thermal gradients

(9) Preoperational test pressure

(10) Abnormal plant pressure loads (including those from high energy line breaks)

(11) Normal external pressure load

(12) SRV discharge to suppression pool

(13) LOCA hydrodynamic pressures in the suppression pool

The LOCA and SRV hydrodynamic pressures on the suppression pool boundaries as described in Appendix 3B are applied as equivalent static pressures equal to the dynamic peak value times DLF. The LOCA and SRV dynamic analyses are described in Appendix 3F.

3.8.1.4.1.1.3 Major Penetrations

The major penetrations in the concrete containment include: (1) the drywell head, (2) the upper drywell equipment and personnel hatches, (3) the lower drywell equipment and personnel hatches, (4) the wetwell access hatch, and (5) the main steam and feedwater pipe penetrations. The global model includes all major penetrations. The state of stress and behavior of the containment around these openings is determined by the use of analytical numerical techniques. The penetrations are included in the global FEA model integrating the containment, RB and FB, described in Subsection 3.8.1.4.1.1.

3.8.1.4.1.1.4 Variation of Physical Material Properties

In the design analysis of the containment, the physical properties of materials are based on the values specified in applicable codes and standards. Reconciliation evaluation is performed using as-built properties.

3.8.1.4.1.2 Design Methods

The design of the containment structure is based on the membrane forces, shear forces and bending moments for the load combinations defined in Subsection 3.8.1.3.6. The membrane forces, shear forces and bending moments in selected sections are obtained from the analysis done using the computer program NASTRAN, as described in Subsection 3.8.1.4.1.1. The global analysis considers the major structural configurations, including RCCV with the internal steel components, the RB with floor connections to the RCCV, and the basemat, using plate element modeling and linear material assumptions. The selected sections from the global model used for the section sizing design calculations are described in Subsection 3G.1.5.4.

The SSDP-2D program module, described in Appendix 3C, is used to determine the extent of concrete cracking at these sections and the resulting concrete and rebar stresses. The SSDP-2D program models a single element of unit height, unit width, and depth equal to the thickness of the wall or slab. The calculations used in SSDP-2D assume that the concrete is isotropic and linearly elastic but with zero tensile strength. The methods used in SSDP-2D can also account for the reduced thermal forces and moments due to concrete cracking when the option of thermal cracking is selected. However, the redistribution of section forces and moments that occurs due to concrete cracking under thermal loads is not calculated by the SSDP-2D procedure. To account for the concrete cracking effects and redistribution of forces and moments from thermal loads, the procedure described in Subsection 3.8.1.4.1.3 is used and the option of thermal cracking in SSDP-2D is not selected.

The input data for the SSDP-2D program consist of the membrane forces, shear forces and bending moments calculated by the NASTRAN linear analysis. The section forces and moments from thermal loads under LOCA are scaled according to the procedure in the next subsection before combination with the other load cases. The areas of the reinforcing steel in terms of steel

area to concrete cross-section ratio are based on the design shown in Appendix 3G. The evaluation of containment structural adequacy is shown in Subsection 3.8.1.5.

The procedures for the design and analysis of the liner plate and its anchorage system are in accordance with the provisions of the ASME Code Section III, Division 2, Subarticle CC-3600. The liner plate anchor design considers deviations in geometry due to fabrication and erection tolerances; however, strains associated with construction-related liner deformations are excluded when calculating liner strains for the service and factored load combinations according to ASME Code Section III, Division 2, Subarticle CC-3720. The strains and stresses in the liner and its anchors are within allowable limits defined by the ASME Code Section III, Division 2, Subarticle CC-3720.

3.8.1.4.1.3 Concrete Cracking Considerations

For thermal loads, the effects of concrete cracking must be considered in developing the internal forces and moments in the section. For these loads, concrete cracking relieves the thermal stress, as well as redistributes the internal forces and moments on the sections from those obtained from a linear analysis. For the LOCA thermal loads, a half-symmetric, 3D continuum element model is used to evaluate the redistribution of forces due to concrete cracking. This analysis is performed with the ABAQUS/ANACAP-U software, which is described in Appendix 3C. A linear analysis, using the solid element model, is first performed as a baseline analysis with benchmarking to the linear plate element design model using NASTRAN. A nonlinear, concrete cracking analysis is then performed under the same thermal loading conditions. In each case, the section forces and moments are calculated from the section stresses.

For each section force component for each of the critical design-basis sections, the ratio of the section force from the cracking analysis to that of the linear analysis is computed for the critical time points following the LOCA. These "thermal ratios" are then used to multiply the section forces obtained from the linear design model for section internal force and moment due to LOCA thermal loads before combining with the other loads according to the load combination condition. In general, the thermal ratios are less than one where the thermal stresses from the linear analysis are high because of the relief and redistribution of stress as the concrete cracks. In some cases, the thermal ratio may be greater than one because of the redistribution of the section forces and moments due to concrete cracking. This typically occurs at sections where the thermal stresses from the linear analysis are low and a small increase in stress develops from redistribution in the non-linear analysis. The section forces and moments from the non-linear analysis can also be used directly.

3.8.1.4.1.4 Corrosion Prevention

[*Type 304L stainless steel or clad carbon steel plate is used for the containment liner in the wetted areas of the suppression pool as protection against any potential pitting and corrosion on all wetted surfaces and at the water-to-air interface area.*]*

The suppression pool contains air-saturated, stagnant, high purity water and is designed for a 60-year life. The amount of corrosion is based on the annual temperature profile of suppression pool water for a typical plant in the southern United States under normal operation. The following conditions can cause the pool temperature to rise above normal:

(1) Reactor core isolation mode: pool temperature can rise 17°C (62°F) above normal for a total of 165 days during the 60-year lifetime.

(2) Suppression pool cooling mode: pool temperature can rise 17°C (62°F) above normal for a total of 540 days during the 60-year lifetime.

[*The corrosion allowance for Type 304L stainless steel in air-saturated water for any oxygen level and temperatures up to 316°C (600°F) for 60 years is 0.12 mm (4 mils).*]* The major concern has involved the air/water interface area where pitting is most likely to occur. The 0.12 mm (4 mils) corrosion allowance is a small fraction of the stainless steel thickness, which is a nominal 2.5 mm (98 mils) if clad carbon steel plate is used.

Water used to fill the suppression pool is either condensate or demineralized. No chemicals are added to the suppression pool water.

Observations made on suppression pool water quality over a period of several years indicate that periodic pool cleaning such as by underwater vacuuming is required, as well as the use of the Fuel and Auxiliary Pool Cooling System (FAPCS) to maintain water quality standards. The FAPCS (Subsection 9.1.3) also acts to maintain purity levels.

The wetted surfaces and water-to-air interface area of the suppression pool are monitored for general corrosion and local pitting in accordance with the ASME B&PV Code, Section XI, Subsection IWE, by the In-service Inspection (ISI) Program described in Subsection 3.8.1.7.3.

Text sections that are bracketed and italicized with an asterisk following the brackets are designated as Tier 2. Prior NRC approval is required to change.

3.8.1.4.2 Ultimate Capacity of the Containment

A deterministic analysis is performed to determine the ultimate capacity of the containment and the details are described in Appendix 19B. A probabilistic analysis for containment pressure fragility is also performed and the details are described in Appendix 19C.

3.8.1.5 Structural Acceptance Criteria

[*For evaluation of the adequacy of the concrete containment structural design, the major allowable stresses of concrete and reinforcing steel for service load combinations and factored load combinations according to ASME Code Section III, Division 2 (except for tangential shear stress carried by orthogonal reinforcement for which a lower allowable is adopted for ESBWR) are shown in Table 3.8-3.*

The allowable tangential shear strength provided by orthogonal reinforcement without inclined reinforcement for concrete with 34.5 MPa (5000 psi) specified compressive strength is limited to 4.88 MPa (708 psi) for factored load combinations.]* Inclined reinforcement is not used to resist tangential shear in the ESBWR containment.

Text sections that are bracketed and italicized with an asterisk following the brackets are designated as Tier 2. Prior NRC approval is required to change.

3.8.1.6 Material, Quality Control and Special Construction Techniques

[*Materials used in construction of the containment are in accordance with RG 1.136 and ASME Code Section III, Division 2, Article CC-2000. Specifications covering all materials are in sufficient detail to assure that the structural design requirements of the work are met.*]*

Text sections that are bracketed and italicized with an asterisk following the brackets are designated as Tier 2. Prior NRC approval is required to change.

3.8.1.6.1 Concrete

All concrete materials are approved prior to start of construction on the basis of their characteristics in test comparisons using ASTM standard methods. Concrete aggregates and cement, conforming to the acceptance criteria of the specifications, are obtained from approved sources. Concrete properties are determined by laboratory tests. Concrete admixtures are used to minimize the mixing water requirements and increase workability. The specified compressive strength of concrete at 28 days, or earlier, is:

[*Structure*	*Specified Strength f'$_c$* *MPa (psi)*
Top Slab	*41.4 (6000)*
Containment excluding Top Slab	*34.5 (5000)*
Foundation Mat	*27.6 (4000)*]*

All structural concrete is batched and placed in accordance with Subarticle CC-2200 and Article CC-4000 of ASME Code Section III, Division 2.

(1) Cement

Cement is Type II conforming to the Specification for Portland Cement (ASTM C 150). The cement contains no more than 0.60% by weight of alkalis calculated as sodium oxide plus 0.658 % by weight potassium oxide. Certified copies of material test reports showing the chemical composition and physical properties are obtained for each load of cement delivered.

Type V cement is used, or other suitable means are employed, to prevent sulfate attack and concrete deterioration at locations where concrete is in contact with soils having more than 0.20% water soluble sulfate (as SO_4) of ground-water with a sulfate concentration exceeding 1500 ppm.

(2) Aggregates

All aggregates conform to the Specification for Concrete Aggregates (ASTM C 33).

(3) Water

Water and ice for mixing is clean, with a total solids content of not more than 2000 ppm as specified in ASME Code Section III, Division 2, Subarticle CC-2223.1. The mixing water, including that contained as free water in aggregate, contains not more than 250 ppm of chlorides (as Cl) as determined by ASTM D-512. Chloride ions contained in the aggregate are included in

calculating the total chloride ion content of the mixing water. The chloride content contributed by the aggregate is determined in accordance with ASTM D-1411.

(4) Admixtures

The concrete may also contain an air-entraining admixture and/or a water-reducing admixture. The air-entraining admixture is in accordance with the Specification of Air Entraining Admixtures for Concrete (ASTM C-260). It is capable of entraining 3 to 6% air, is completely water soluble, and is completely dissolved when it enters the batch. Superplasticizers, entraining from 1.5 to 4.5% air, may be used in concrete mixes for congested areas to improve workability and prevent the formation of voids around reinforcement. The water-reducing admixture conforms to the Standard Specification for Chemical Admixtures for Concrete (ASTM C-494), Types A and D. Type A is used when average ambient temperature for the daylight period is below 21°C (70°F). Type D is used when average ambient air temperature for the daylight period is 21°C (70°F) and above. Pozzolans, if used, conform to Specification for Coal Fly Ash and Raw or Calcined Natural Pozzolans for Use in Concrete (ASTM C-618), except that the loss on ignition is limited to 6%. Admixtures containing more than 1% by weight chloride ions are not used.

(5) Concrete Mix Design

Concrete mixes are designed in accordance with ACI 211.1 (Standard Practice for Selecting Proportions for Normal, Heavyweight, and Mass Concrete), using materials qualified and accepted for this work. Only mixes meeting the design requirements specified for concrete are used.

Text sections that are bracketed and italicized with an asterisk following the brackets are designated as Tier 2. Prior NRC approval is required to change.

3.8.1.6.2 Reinforcing Steel

[*Reinforcing bars for concrete are deformed bars meeting requirements of the Standard Specification for Deformed and Plain Carbon-Steel Bars for Concrete Reinforcement (ASTM A-615, Grade 60).*]* Mill test reports, in accordance with ASTM A-615, are obtained from the reinforcing steel supplier to substantiate specification requirements.

The test procedures are in accordance with ASTM A-370, and acceptance standards are in accordance with ASTM A-615.

Text sections that are bracketed and italicized with an asterisk following the brackets are designated as Tier 2. Prior NRC approval is required to change.

3.8.1.6.3 Splices of Reinforcing Steel

[*Sleeves for reinforcing steel mechanical splices conform to ASTM A-513, A-519 or A-576 Grades 1008 through 1030. Certified copies of material test reports indicating chemical composition and physical properties are furnished by the manufacturer for each sleeve lot.*

Placing and splicing of reinforcing bars is in accordance with Article CC-4300 and Subarticle CC-3530 of ASME Code Section III, Division 2.]*

Text sections that are bracketed and italicized with an asterisk following the brackets are designated as Tier 2. Prior NRC approval is required to change.

3.8.1.6.4 Liner Plate and Appurtenances

[*The materials used in construction of the containment are in accordance with the Article CC-2500 of ASME Code Section III, Division 2, and augmented by the requirements of RG 1.136.*

The materials conform to the requirements of the Articles CC-2500 through CC-2700 ASME Code Section III, Division 2. The liner plate is of the following type and grade:

Carbon Steel:	*ASME SA-516 Gr.-70 or ASTM A-709 HPS 70W †*
Carbon Steel with Stainless Clad:	*ASME SA-264 (SA-516 Gr. -70 + SA-240 Type 304L or ASTM A-709 HPS 70W † + SA-240 Type 304L)*
Stainless Steel:	*ASME SA-240 Type 304L*

† ASME Code Case N-763]*

Dimensional tolerances for the erection of the liner plate and appurtenances are detailed in the construction specifications based on the structure geometry, liner stability, concrete strength and the construction methods to be used and ASME requirements. The liner plate anchorages are designed for the loads indicated in Subsection 3.8.1.3.

Text sections that are bracketed and italicized with an asterisk following the brackets are designated as Tier 2. Prior NRC approval is required to change.

3.8.1.6.5 Quality Control

Quality Control (QC) procedures are established in the construction specification and implemented during construction and inspection. The construction specification covers the fabrication, furnishing, and installation of each structural item and specifies the inspection and documentation requirements to ensure that the requirements of ASME Code Section III, Division 2, and the applicable Regulatory Guides are met.

3.8.1.6.6 Welding Methods and Acceptance Criteria for Containment Vessel Liner and Appurtenances

Welding activities conform to the requirements of Section III of the ASME Code. The required nondestructive examinations (NDEs) and acceptance criteria are provided in Table 3.8-5.

3.8.1.7 Testing and In-service Inspection Requirements

3.8.1.7.1 Structural Integrity Pressure Test

[*A SIT of the containment structure is performed in accordance with Article CC-6000 of ASME Code Section III, Division 2 and RG 1.136, after completion of the containment construction. The design pressure is 310 kPaG (45 psig). The drywell and wetwell are tested simultaneously at a pressure of 356.8 kPaG (51.8 psig). This is 115% of the design pressure. Next a differential pressure test of 277.5 kPad (40 psid) is conducted between the drywell and the wetwell. The drywell pressure is greater than the wetwell pressure during the differential pressure test. This test differential pressure is 115% of the design-differential pressure. At no time during the SIT the maximum drywell pressure of 356.8 kPaG (51.8 psig) is exceeded.*

During these tests, the wetwell, GDCS pools, IC/PCCS pools (including expansion pools), reactor well, Equipment Storage pool, and Fuel Buffer pool are filled with water to the normal operational water level. Deflection and concrete crack measurements are made to determine that the actual structural response is within the limits predicted by the design analysis.

In addition to the deflection and crack measurements, the first prototype containment structure is instrumented for the measurement of strains in accordance with the provisions of Subarticle CC-6370 of ASME Code Section III, Division 2.]*

Text sections that are bracketed and italicized with an asterisk following the brackets are designated as Tier 2. Prior NRC approval is required to change.

3.8.1.7.2 Preoperational and In-Service Integrated Leak Rate Test

Preoperational and in-service integrated leak rate testing is discussed in Subsection 6.2.6.

3.8.1.7.3 Preservice and In-service Inspection

3.8.1.7.3.1 Scope

This subsection describes the preservice and ISI Program requirements for the Containment Structure, ASME B&PV Code, Class CC and MC pressure retaining components and their integral attachments. It describes those programs implementing the requirements of the ASME B&PV Code Section XI (ASME Section XI). Subsection IWE of ASME Section XI applies to Class MC and metallic shell and penetration liners of Class CC pressure retaining components and their integral attachments. Subsection IWL of ASME Section XI applies to the Class CC reinforced concrete.

The design to perform preservice inspection is in compliance with the requirements of the ASME Section XI, 2001 Edition with 2003 Addenda. The preservice and inservice inspection program plans are based on the ASME Section XI, Edition and Addenda specified in accordance with 10 CFR 50, Section 50.55a. The Containment Structure is designed to provide access for the examinations required by ASME Section XI, IWE-2500 and IWL-2500. The actual Edition of ASME Section XI to be used is specified based on the procurement date of the component per 10 CFR 50, Section 50.55a. The ASME Code requirements discussed in this section are provided for information and are based on the 2001 Edition of ASME Section XI with 2003 Addenda.

3.8.1.7.3.2 Exclusions

During the detailed design phase, the goal is to minimize the number of inaccessible areas in order to reduce the number of exclusion areas. Furthermore, remote tooling is used in high radiation areas where feasible.

Portions of the Containment Structure are excluded from preservice and inservice examination requirements of ASME Section XI, Subsections IWE and IWL as follows:

(1) For Class MC components and metallic shell and penetration liners of Class CC components and their integral attachments:

   a. Vessels, parts, and appurtenances outside the boundaries of the containment system as defined in the Design Specifications;

b. Embedded or inaccessible portions of containment vessels parts, and appurtenances that meet the requirements of the Edition and Addenda of ASME Section III used for construction;

c. Portions of containment vessels, parts and appurtenances that become embedded or inaccessible as a result of vessel repair/replacement activities if the prerequisites for exemption of inaccessible surface areas under ASME Section XI, IWE-1232 and IWE-5220 are satisfied;

d. Piping, pumps, and valves that are part of the containment system, or which penetrate or are attached to the containment vessel. These components are examined in accordance with the ASME Section XI requirements, i.e., Subsection IWB or IWC, applicable to their classification as defined in the Design Specification.

(2) For Class CC reinforced concrete, those portions of the concrete surface that are covered by the liner, foundation material, or backfill, or are otherwise obstructed by adjacent structures, components, parts, or appurtenances.

3.8.1.7.3.3 Preservice Examination

The preservice examinations are performed prior to plant startup but after the Structural Integrity Pressure Test. Visual examinations are performed after the application of any required protective coatings. The preservice examinations include those examinations listed in ASME Section XI, Table IWE-2500-1, IWL-2510 and Table IWL-2500-1.

3.8.1.7.3.4 In-service Inspection Schedule

The inservice inspection interval for Class MC components and metallic shell and penetration liners of Class CC components and their supports conform to Inspection Program B as described in ASME Section XI, IWE-2412. Except where deferral is permitted by ASME Section XI, IWE-2500-1, the percentages of examinations completed within each period of the interval are to correspond to Table IWE-2412-1. The diaphragm floor and vent wall receive a visual, VT-3, examination once during each inspection interval.

The in-service inspection of Class CC reinforced concrete are performed at 1, 3, and 5 years after the completion of the Structural Integrity Pressure Test and every 5 years thereafter in accordance with ASME Section XI, IWL-2410 and Table IWL-2500-1.

3.8.1.7.3.5 Pressure Tests

The pressure testing (leakage testing) of the Containment Structure are conducted in accordance with 10 CFR 50, Appendix J. In addition, the leakage test requirements of ASME Section XI, IWE-5000 and IWL-5000 are applied following repair/replacement activities as defined by the ASME Code.

3.8.1.7.3.6 Qualification of Examination Personnel

Personnel performing preservice and inservice examinations of the containment system are qualified in accordance with the applicable requirements of the ASME Section XI. Personnel performing visual examination types VT-1, VT-3, and ultrasonic examination are qualified in accordance with Section XI, IWA-2300. Personnel performing detailed visual examination and

general visual examination of concrete are qualified in accordance with IWA-2300 to perform examinations as described in IWL-2300.

3.8.1.7.3.7 Visual Examination Methodology

Visual examination types VT-1 and VT-3 are conducted in accordance with ASME Section XI, IWA-2210. When performing examinations remotely, the requirements of Table IWA-2210-1 are modified in order to extend maximum specified direct examination distance and decrease the minimum illumination, provided that the conditions or indications for which the examination is being conducted can be detected at the chosen distance and illumination.

3.8.1.7.3.8 Visual Examination of Surfaces

The type VT-1 examination is used to conduct the detailed examination required for visible containment surfaces requiring augmented examination in accordance with ASME Section XI, Table IWE-2500-1, Examination Category E-C, Item E4.11. The type VT-3 examination is used to conduct the general visual examinations required for wetted surfaces of submerged areas and accessible surfaces of BWR ventilation systems as required by Table IWE-2500-1, Examination Category E-A, Items E1.12 and E1.20, respectively. Other surfaces are examined as specified by ASME Section XI, Tables IWE-2500-1 or IWL-2500-1, as applicable.

3.8.1.7.3.9 Visual Examination of Bolted Connections

The type VT-3 examination is used to conduct the general visual examination of pressure retaining bolted connections that are part of the accessible surface areas identified by ASME Section XI, Table IWE-2500-1, Examination Category E-A, Item E1.11. That VT-3 examination is conducted at least once during each inspection interval as defined by IWE-2412. The bolting is disassembled to perform the VT-3 examination; however, as an alternative to a rigid inspection schedule, the VT-3 visual examination is performed whenever the bolting is disassembled for any reason. Where flaws or degradation are identified during a VT-3 examination, a type VT-1 examination is performed.

3.8.1.7.3.10 Ultrasonic Examination

The ultrasonic thickness measurements used for surfaces requiring augmented examination in accordance with ASME Section XI, Table IWE-2500-1, Examination Category E-C, Item E4.12, are conducted using a technique demonstrated on a calibration standard. Methods such as those described in ASTM E 797, Standard Practice for Measuring Thickness by Manual Ultrasonic Pulse-Echo Contact Method, are acceptable. The ultrasonic thickness measurements are performed for both Class MC components and metallic shell and penetration liners of Class CC components if augmented examination is necessary under the provisions of ASME Section XI, IWE-1240.

3.8.1.7.3.11 Acceptance Criteria

The acceptance standards of the material specification or IWB-3517.1 are used for the evaluation of bolting. For other preservice and inservice examinations, the requirements of IWE-3000 for ASME Class MC components and metallic liners or IWL-3000 for ASME Class CC components are used for evaluation. The ultrasonic acceptance standard of IWE-3511.3 for ASME Class MC components is applied to metallic liners of Class CC components.

3.8.1.7.3.12 Evaluation of Inaccessible Areas

[*During operation, areas inaccessible for examination for acceptability are evaluated if conditions exist in accessible areas that indicate the presence of or result in the degradation of the inaccessible areas. For each such area identified, the following information is included in the In-service Inspection Summary report required by ASME Section XI, IWA-6000:*

(1) A description of the type and estimated extent of degradation, and the conditions that led to the degradation.

(2) An evaluation of each area and the result of the evaluation.

(3) *A description of necessary corrective actions.*]*

Text sections that are bracketed and italicized with an asterisk following the brackets are designated as Tier 2. Prior NRC approval is required to change.

3.8.2 Steel Components of the Reinforced Concrete Containment

3.8.2.1 Description of the Steel Containment Components

The ESBWR has a RCCV as described in Subsection 3.8.1. This section describes the following steel components of the concrete containment vessel:

(1) Personnel Air Locks

(2) Equipment Hatches

(3) Penetrations

(4) Drywell Head

(5) Passive Containment Cooling System (PCCS) Condenser

3.8.2.1.1 Personnel Air Locks

Two personnel air locks with an inside diameter sufficient to provide 1850 mm (6 ft. 13/16 in.) high by 750 mm (2 ft. 5-1/2 in.) wide minimum clearance above the floor at the door way are provided. One of these air locks provides access to the upper drywell and the other provides access to the lower drywell.

Lock and swing of the doors is by manual and automatic means. The locks extend radially outward from the RCCV into the RB and are supported by the RCCV only. The minimum clear horizontal distance not impaired by the door swing is 1850 mm (6 ft. 13/16 in.).

Each personnel air lock has two pressure-seated doors interlocked to prevent simultaneous opening of both doors and to ensure that one door is completely closed before the opposite door can be opened. The design is such that the interlocking is not defeated by postulated malfunctions of the electrical system. Signals and controls that indicate the operational status of the doors are provided. Provision is made to permit temporary bypassing of the door interlock system during plant cold shutdown. The door operation is designed and constructed so either door may be operated from inside the containment vessel, inside the lock, or from outside the containment vessel.

The lock is equipped with a digital readout pressure transducer system to read inside and outside pressures. Quick-acting valves are provided to equalize the pressure in the air lock when personnel enter or leave the containment vessel. The personnel air locks have a double sealed flange with provisions to pressure test the space between the seals of the flange.

3.8.2.1.2 Equipment Hatch

Three equipment hatches are provided. One of these serves the upper drywell and another serves the lower drywell. The third equipment hatch provides personnel and equipment access to the wetwell airspace.

The equipment hatch covers have a double sealed flange with provisions to pressure test the space between the seals of the flange. A means for removing and handling the equipment hatch cover is provided. The hoisting equipment and hoisting guides are arranged to minimize contact between the doors and seals during opening and closing. The equipment hatch includes the electric motorized hoist with pushbutton control station, lifting slings, hoist supports, hoisting guides, access platforms, and ladders for access to the dogged position of the door and hoist, latches, seats, dogging devices, and tools required for operation and maintenance of the hatch.

The equipment hatches and covers are entirely supported by the RCCV.

3.8.2.1.3 Penetrations

In addition to the personnel airlocks, equipment hatches and drywell head, other steel components of the concrete containment vessel include piping and electrical penetrations. The major piping penetrations are associated with main steam and feedwater lines. Electrical penetrations are described in Subsection 8.3.1. A summary of various containment penetrations is given in Section 6.2. The state of stress and behavior of the containment wall around these openings is determined by the use of analytical numerical techniques. The analysis of the area around the penetrations consists of a three-dimensional FEA with boundaries extending to a region where the discontinuity effects of the opening are negligible.

The RCCV penetrations are categorized into two basic types. These types differ with respect to whether the penetration is subjected to a hot or cold operational environment.

The cold penetrations pass through the RCCV wall and are embedded directly in it. The hot penetrations do not come in direct contact with the RCCV wall but are provided with a thermal sleeve, which is attached to the RCCV wall. The thermal sleeve is attached to the process pipe at distance from the RCCV wall to minimize conductive heat transfer to the RCCV wall. With regard to the local areas of concrete around high energy penetrations, thermal analyses have been carried out to demonstrate that concrete temperature limits in ASME Section III, Division 2, CC-3440 are satisfied. In all cases the concrete temperature is lower than 93°C (200°F) for normal operation, and lower than 177°C (350°F) for accident condition. The sleeve length for hot penetrations is designed to meet these temperature requirements.

Figures 3.8-6, 3.8-7, 3.8-8, 3.8-9, 3.8-10 and 3.8-11 show the typical details for the containment mechanical and electrical penetrations.

3.8.2.1.4 Drywell Head

A 10,400 mm (34 ft. 1-7/16 in.) diameter opening in the RCCV upper drywell top slab over the RPV is covered with a removable steel torispherical drywell head, which is part of the pressure boundary. This structure is shown in Appendix 3G Figure 3G.1-51. The drywell head is designed for removal during reactor refueling and for replacement prior to reactor operation using the RB crane. One pair of mating flanges is anchored in the drywell top slab and the other is welded integrally with the drywell head. Provisions are made for testing the flange seals without pressurizing the drywell.

There is water in the reactor well above the drywell head during normal operation. The height of water is found in Table 3G.1-4. The stainless steel clad thickness for the drywell head is 2.5 mm (98 mils) and is determined in accordance with NB-3122.3 requirements so that it results in negligible change to the stress in the base metal.

There are six support brackets attached to the inner surface of the drywell head circumferentially to support the head on the operating floor during refueling. These support brackets have no stiffening effect and do not resist loads when the head is in the installed configuration.

To provide a leak resistant refueling seal, a structural seal plate with an attached compressible-bellows sealing mechanism between the Reactor Vessel and Upper Drywell opening is utilized. The Refueling Seal is a continuous gusseted radial plate that is anchored to the Drywell opening in the Top floor slab. The radial plate surrounds the RPV with a radial gap opening to allow for thermal radial expansion of the RPV. A circumferential radial bracket from the RPV connects to a circumferential bellows that is also connected to the underside of the Drywell opening plate, thus providing a refueling seal, and allowing for axial thermal expansion of the RPV.

3.8.2.1.5 PCCS Condenser

There are six PCCS Condensers located in the PCCS subcompartment pools. The condensers form an integral part of the containment boundary while the pool structure and pool water are outside containment. The PCCS Condensers are described in Subsection 6.2.2, and their structural evaluation is documented in Appendix 3G.

3.8.2.2 Applicable Codes, Standards, Specifications and Regulatory Guides

3.8.2.2.1 Codes, Standards and Regulatory Guides

[*In addition to the documents specified in Subsection 3.8.1.2.2, the following code, standard and regulatory guide apply:*

(1) ASME B&PV Code, Section III, Division 1, Nuclear Power Plant Components, Subsection NE, Class MC and Code Case N-284.

(2) ANSI/AISC N690-1994s2 (2004) Specification for the Design, Fabrication and Erection of Steel Safety-Related Structures for Nuclear Facilities.

(3) Regulatory Guide 1.57, Design Limits and Loading Combinations for Metal Primary Reactor Containment System Components.]*

Text sections that are bracketed and italicized with an asterisk following the brackets are designated as Tier 2. Prior NRC approval is required to change.

3.8.2.2.2 Code Classification

The steel components of the RCCV are classified as Class MC in accordance with Subarticle NCA-2130, ASME Code Section III.

3.8.2.2.3 Code Compliance

[*The steel components within the boundaries defined in Subsection 3.8.2.1.2, are designed, fabricated, erected, inspected, examined, and tested in accordance with Subsection NE, Class MC Components and Articles NCA-4000 and NCA-5000 of ASME Code Section III. Structural steel attachments beyond the boundaries established for the steel components of the RCCV are designed, fabricated, and constructed according to the AISC N690-94, "Specification for the Design, Fabrication, and Erection of Steel Safety-Related Structures for Nuclear Facilities."*]*

Text sections that are bracketed and italicized with an asterisk following the brackets are designated as Tier 2. Prior NRC approval is required to change.

3.8.2.3 Loads and Load Combinations

[*The applicable loads are described in Subsection 3.8.1.3 and load combinations are shown in Table 3.8-4.*]*

Text sections that are bracketed and italicized with an asterisk following the brackets are designated as Tier 2. Prior NRC approval is required to change.

3.8.2.4 Design and Analysis Procedures

The steel components of the RCCV are designed in accordance with the General Design Rules of Subarticles NE-3100 (General Design), NE-3200 (Design by Analysis), and NE-3300 (Design by Formula) of ASME Code Section III. For the configurations and loadings that are not explicitly treated in Subarticle NE-3130, the design is in accordance with the applicable Subarticles designated in paragraphs (b) and (d) of Subarticle NE-3130 of ASME Code Section III.

The design of nonpressure-resisting parts is performed in accordance with the general practices of the AISC N690-94, "Specification for the Design, Fabrication, and Erection of Steel Safety-Related Structures for Nuclear Facilities."

3.8.2.4.1 Description

Following are individual descriptions of the design and analysis procedures required to verify the structural integrity of critical areas present within the steel components of the RCCV.

3.8.2.4.1.1 Personnel Air Locks

The personnel air lock consists of four main sections: doors, bulkheads, main barrel, and reinforcing barrel with collar. The personnel air locks are supported entirely by the RCCV wall. The lock barrel is welded directly to the containment liner penetration through the RCCV wall. The personnel lock and penetration through the RCCV wall is analyzed using a finite element computer program and/or manual calculation based on handbook formulas and tables. The discontinuity stresses induced by the combination of external, dead, and live loads, including the effects of earthquake loadings, are evaluated. The required analyses and limits for the resulting

stress intensities are in accordance with Subarticles NE-3130, NE-3200 and NE-3300 of ASME Code Section III, Division 1.

3.8.2.4.1.2 Equipment Hatches

An equipment hatch assembly consists of the equipment hatch cover and the equipment hatch body ring, which is imbedded in the RCCV wall and connects to the RCCV liner.

A finite-element analysis model and/or manual calculation is used to determine the stresses in the body ring and hatch cover of the equipment hatch. The equipment analysis and the stress intensity limits are in accordance with Sub-articles NE-3130, NE-3200 and NE-3300 of ASME Code Section III. The hatch cover with the bolted flange is designed in accordance with Subarticle NE-3326 of ASME Code Section III.

3.8.2.4.1.3 Other Penetrations

Piping penetrations and electrical penetrations are subjected to various combinations of piping reactions, mechanical, thermal and seismic loads transmitted through the RCCV wall structure. The resulting forces due to various load combinations are combined with the effects of external and internal pressures. The required analysis and associated stress intensity limits are in accordance with Subarticle NE-3200 of ASME Code Section III, Division 1, including fatigue evaluation as required.

Main Steam and Feedwater penetrations are analyzed using the finite element method of analysis for applicable loads and load combinations. The resulting stresses meet the acceptance criteria stipulated in Subarticle NE-3200 of ASME Code Section III, Division 1, including fatigue evaluation as required.

3.8.2.4.1.4 Drywell Head

The drywell head, consisting of shell, flanged closure and drywell-head anchor system, is analyzed using a finite-element stress analysis computer program or manual calculation. The stresses, including discontinuity stresses induced by the combination of external pressure or internal pressure, dead load, live load, thermal effects and seismic loads, are evaluated. The required analyses and limits for the resulting stress intensities are in accordance with Subarticles NE-3130, NE-3200 and NE-3300 of ASME Code Section III, Division 1.

The compressive stress within the knuckle region caused by the internal pressure and the compression in other regions caused by other loads are limited to the allowable compressive stress values in accordance with Subarticle NE-3222 of ASME Code Section III, Division 1, or Code Case N-284.

3.8.2.4.1.5 PCCS Condenser

The PCCS condensers are composed of two modules consisting of drum-and-tube type heat exchangers using horizontal upper and lower drums connected with multiple vertical tubes. Two identical modules are coupled to form one PCCS heat exchanger unit. The condenser assembly forms an integral part of the containment boundary and is submerged in the water of an IC/PCCS pool subcompartment. The pool water lies outside the containment boundary. Three sleeves containing the feed line, return line and drain lines pass through the RCCV Top Slab. The condenser, the lines connected to the condenser, and the sleeves are part of the containment

boundary. Figure 3.8-7 shows the typical configuration for these passages through the RCCV Top Slab and Table 3.8-17 lists each of these passages and their function.

The PCCS condenser is anchored to the RCCV Top Slab and is laterally supported by a 3D steel frame structure that transmits the horizontal dynamic forces to the RCCV Top Slab.

The PCCS condenser is subjected to various combinations of piping reactions, mechanical, thermal, detonation pressure, and seismic loads including sloshing. The resulting forces due to various load combinations are combined with the effects of differential pressures.

A finite-element analysis model supplemented with hand calculation is used to determine the stresses in the different components of the PCCS condenser and supports. Details of this analysis, including relevant drawings and results, can be found in Reference 3.8-1. The PCCS condenser parts conform to the design requirements of Subarticles NE-3200 and NE-3300 of ASME Code, Section III, Subsection NE (Class MC). The PCCS condenser support is evaluated in accordance with the ASME Code, Section III, Subsection NF.

3.8.2.5 Structural Acceptance Criteria

[*The structural acceptance criteria for the steel components of the RCCV (i.e., the basis for establishing allowable stress values, the deformation limits, and the factors of safety) are established by and in accordance with ASME Code Section III, Subsection NE.*

In addition to the structural acceptance criteria, the RCCV is designed to meet maximum leakage rate requirements discussed in Section 6.2. Those leakage requirements also apply to the steel components of the RCCV.

The combined loadings designated under "Normal", "Construction", "Severe Environmental", "Extreme Environmental", "Abnormal", "Abnormal/Severe Environmental" and "Abnormal/Extreme Environmental" in Table 3.8-2 are categorized according to Level A, B, C and D service limits as defined in NE-3113. The resulting primary and local membrane, bending, and secondary stress intensities, including compressive stresses, are calculated and their corresponding allowable limit is in accordance with Subarticle NE-3220 of ASME Code Section III.

In addition, the stress intensity limits for testing, design and Level A, B, C and D conditions are summarized in Table 3.8-4.

Stability against compression buckling is assured by an adequate factor of safety.

The allowable stress limits used in the design and analysis of non-pressure-resisting components are in accordance with Subsection 3.8.2.2.1 Item (2).]*

Text sections that are bracketed and italicized with an asterisk following the brackets are designated as Tier 2. Prior NRC approval is required to change.

3.8.2.6 Materials, Quality Control, and Special Construction Techniques

[*The steel pressure retaining components of the RCCV meet the requirements of Article NE-2120 of ASME Section III. The principal materials for the RCCV locks, hatches, penetrations, drywell head, and PCCS condensers are as follows:*

- *Plate (SA-240 type 304L, SA-516 grade 60 or 70)*

- *Pipe (seamless SA-333 grade 1 or 6; or SA-106 grade B or SA-312 type 304L or Welded SA-671 Gr CC70)*
- *Forgings (SA-182F 304L)*
- *General Tubing (SA-213 grade TP304L)*
- *PCCS Condenser Tubing (SA-312 grade XM-19)*
- *Bolting (SA-193-B8 or SA-437 Gr B4B bolts. Nuts shall conform to SA-194 or to the requirements for nuts in the specification for the bolting material to be used.)*
- *Clad (SA-240 type 304L)*]*

Text sections that are bracketed and italicized with an asterisk following the brackets are designated as Tier 2. Prior NRC approval is required to change.

3.8.2.7 Testing and In-service Inspection Requirements

Testing and In-service Inspection Requirements of the containment vessel, including the steel components, is described in Subsection 3.8.1.7.

3.8.2.7.1 Welding Methods and Acceptance Criteria

Welding activities conform to requirements of Section III of the ASME Code. The required NDE and acceptance criteria are provided in Table 3.8-5.

3.8.2.7.2 Shop Testing Requirements

The shop tests of the personnel air locks include operational testing and an overpressure test. After completion of the personnel air locks tests (including all latching mechanisms and interlocks), each lock is given an operational test consisting of repeated operating of each door and mechanism to determine whether all parts are operating smoothly without binding or other defects. All defects encountered are corrected and retested. The process of testing, correcting defects, and retesting is continued until no defects are detectable.

For the operational test, the personnel air locks are pressurized with air to the maximum permissible code test pressure. All welds and seals are observed for visual signs of distress or noticeable leakage. The lock pressure is then reduced to design pressure and a thick bubble solution is applied to all welds and seals and observed for bubbles or dry flaking as indications of leaks. All leaks and questionable areas are clearly marked for identification and subsequent repair.

During the overpressure testing, the inner door is blocked with holddown devices to prevent unseating of the seals. The internal pressure of the lock is reduced to atmospheric pressure and all leaks are repaired. Afterward, the lock is again pressurized to the design pressure with air and all areas suspected or known to have leaked during the previous test are retested by the bubble technique. This procedure is repeated until no leaks are discernible.

3.8.3 Concrete and Steel Internal Structures of the Concrete Containment

3.8.3.1 Description of the Internal Structures

The functions of the containment internal structures include (1) support of the reactor vessel radiation shielding, (2) support of piping and equipment, and (3) formation of the pressure suppression boundary. The containment internal structures are constructed of structural steel. The containment internal structures include the following:

- Diaphragm floor
- Vent wall
- GDCS pool walls
- Reactor shield wall (RSW)
- RPV support brackets
- Miscellaneous platforms

The containment internal structures consist of the diaphragm floor slab, vent wall, GDCS pool walls, RSW, and the RPV support bracket. These structures are shown in the general arrangement drawings in Appendix 3G Subsection 3G.1.

The diaphragm floor slab acts as a barrier between the drywell and the wetwell. The diaphragm floor slab is supported on the reinforced concrete containment wall at its outer periphery and on the vent wall at its inner periphery. The diaphragm floor slab is a structural steel design. The space between the floor slab top and bottom plates is filled with concrete. The slab is supported by a system of radial beams spaced evenly all around and spanning between the vent wall structure and the reinforced concrete containment wall.

The vent wall structure is also a structural steel design consisting of two concentric carbon steel cylinders connected together by vertical web plates evenly all around. The vent wall structure is anchored at the bottom into the RPV pedestal and is restrained at the top by the diaphragm floor slab. The cylindrical annulus carries 12 vent pipes and 12 SRV downcomer pipes with sleeves, from the drywell into the suppression pool. The space in the cylindrical annulus is filled with concrete.

There are three GDCS pools supported on top of the diaphragm floor slab. The pools on one side are contained by the reinforced concrete containment wall and on the other side by structural steel walls.

The RSW is a thick steel cylindrical structure that surrounds the RPV. It is supported by the RPV support brackets. The function of the RSW is to attenuate radiation emanating from the RPV. In addition, the RSW provides structural support for the RPV stabilizer and the RPV insulation. Openings are provided in the RSW to permit the routing of necessary piping to the RPV and to permit in-service inspection of the RPV and piping.

Appendix 3G Section 3G.1 contains the detail design and analysis information for these internal structures.

3.8.3.1.1 Diaphragm Floor

[*The diaphragm floor serves as a barrier between the drywell and the wetwell. It is a concrete-fill steel slab having steel plates at the top and bottom surfaces, with an outside diameter of 18.0 m (59 ft. 5/8 in.), and a thickness of 0.6 m (23-5/8 in.).*

The diaphragm floor is supported by the vent wall and the containment wall. The connection of the diaphragm floor to the containment wall is a fixed support.

Carbon steel plates, 25 mm (1 in.) thick, are provided on the top and bottom of the diaphragm floor. The plates prevent bypass flow of steam from the upper drywell to the wetwell air space during a LOCA.]*

Text sections that are bracketed and italicized with an asterisk following the brackets are designated as Tier 2. Prior NRC approval is required to change.

3.8.3.1.2 RPV Support Bracket

The eight (8) RPV support brackets are located at the junction of RPV pedestal and vent wall structure. These brackets are made of structural steel and they provide structural support to the RPV as well as the RSW. See Appendix 3G Subsection 3G.1.5.4.2.4.

3.8.3.1.3 Reactor Shield Wall

The RSW is supported by the RPV support bracket and surrounds the RPV. Its function is to attenuate radiation emanating from the Reactor Vessel. In addition, the RSW provides structural support for the Reactor Vessel stabilizer, the reactor vessel insulation, some of the drywell equipment, in-service inspection catwalks and pipe support structure. Openings are provided in the shield wall to permit the routing of necessary piping to the RPV and to permit in-service inspection of the RPV and piping.

[*The shield wall is made of structural steel and is shaped as a right cylinder. The plate thickness varies along the elevation and is 160 mm (6-5/16 in.), 210 mm (8-1/4 in.), and 260 mm (10-1/4 in.) and the inside of the wall is 4.646 m (15 ft. 2-7/8 in.) radius.*]*

Text sections that are bracketed and italicized with an asterisk following the brackets are designated as Tier 2. Prior NRC approval is required to change.

3.8.3.1.4 Vent Wall

[*The vent wall structure is made up of two concentric carbon steel cylindrical plates connected together by vertical web plates at 15 degrees on centers. The cylindrical structure has an inner and outer diameter of 13.2 m (43 ft. 3-11/16 in.) and 16.7 m (54 ft. 9-1/2 in.) respectively with overall height of 12.85 m (42 ft. 1-7/8 in.). The vent wall structure is anchored at the bottom into the RPV pedestal and is restrained at the top by the diaphragm floor at elevation 17500.*

The cylindrical annulus carries twelve 1.20 m (3 ft. 11-1/4 in.) O.D. vent pipes and twelve SRV discharge pipes with sleeves, from the drywell into the suppression pool; and three lines of the drywell cooling system. The space in the cylindrical annulus is filled with concrete. The wetted surface of the outer cylinder is covered with stainless steel cladding to prevent corrosion.]*

Text sections that are bracketed and italicized with an asterisk following the brackets are designated as Tier 2. Prior NRC approval is required to change.

3.8.3.1.5 Gravity Driven Cooling System Pool

There are three GDCS pools supported on top of the diaphragm floor.

The pools on one side are contained by the RCCV wall and on the other side by walls made of structural steel.

The GDCS pool walls away from the RCCV are made of carbon steel plates lined with stainless steel cladding and backed up with vertical and horizontal steel structural framing system.

3.8.3.1.6 Miscellaneous Platforms

Miscellaneous platforms are designed to allow access and to provide support for equipment and piping. The platforms consist of steel beams and open grating to facilitate movement of air and liquids in case of pipe breaks. Platforms are classified as Seismic Category I structures when they support safety-related functions. Otherwise they are classified as Seismic Category II. Similarly, other miscellaneous structural components inside containment that do not support safety-related functions are classified as Seismic Category II.

3.8.3.1.7 Miscellaneous Commodities

See Subsection 3.8.4.1.6 for Cable trays, Conduits, and their supports. See Subsection 3.8.4.1.7 for Heating, Ventilation and Air Conditioning (HVAC) ducts and their supports.

3.8.3.2 Applicable Codes, Standards, and Specifications

[*The design and construction of the concrete and steel internal structures of the containment conform to the applicable codes, standards, specifications, and regulations listed in Table 3.8-6 except where specifically stated otherwise.*

Structure or Component	*Specific Reference Number in Table 3.8-6*
Diaphragm Floor	*1-12, 15-20*
RPV Support Bracket	*15-20*
Vent wall	*1-12, 15-20*
Reactor Shield Wall	*15-20*
GDCS Pool Wall	*15-20*
Miscellaneous Platforms	*15-20*

Anchorage of steel internal structures complies with RG 1.199.]*

Text sections that are bracketed and italicized with an asterisk following the brackets are designated as Tier 2. Prior NRC approval is required to change.

3.8.3.3 Loads and Load Combinations

3.8.3.3.1 Load Definitions

The loads and applicable load combinations for which a containment internal structure is designed depend on the conditions to which the particular structure is subjected.

The containment internal structures are designed in accordance with the loads described in Subsection 3.8.1.3. These loads and the effects of these loads are considered in the design of all internal structures as applicable. The RSW is also designed to the Annulus Pressurization loads, which are loads and pressures directly on the RSW caused by a rupture of a pipe within the reactor vessel shield wall annulus region.

3.8.3.3.2 Load Combination

[*The load combinations and associated acceptance criteria for steel internal structures of the containment are listed in Table 3.8-7.*]*

Text sections that are bracketed and italicized with an asterisk following the brackets are designated as Tier 2. Prior NRC approval is required to change.

3.8.3.4 Design and Analysis Procedures

The design of steel internal structures is performed in accordance with the general practice of the ANSI/AISC N690. See Table 3.8-7 for more details. The effects of concrete cracking of the containment structure on the accidental thermal stresses in the containment internal structures are accounted for in the form of thermal ratios as described in Subsection 3.8.1.4.1.3.

See Subsection 3.8.3.7 for accessibility to equipment, valves, instrumentation, welds, supports, etc. for operation, inspection or removal.

3.8.3.4.1 Diaphragm Floor

The diaphragm is included in the finite-element model described in Subsection 3.8.1.4.1.1. The design and analysis is based on the elastic method. All loads are resisted by the integral action of the top plate, bottom plate and support beams. The radial support beams are welded to the diaphragm floor, so they form an integral structure.

3.8.3.4.2 Reactor Pressure Vessel Support Bracket

The RPV support bracket is included in the finite-element model described in Subsection 3.8.1.4.1.1.

The design and analysis is based on the elastic method. All loads from RPV support and RSW are resisted by the integral action of eight separate brackets equally spaced circumferentially. The RPV support is described in Subsection 5.3.3.2.2.

3.8.3.4.3 Reactor Shield Wall

The RSW is included in the finite-element model described in Subsection 3.8.1.4.1.1. The design and analysis is based on the elastic method. All loads including those from the RPV stabilizer are resisted by the thick steel cylinder supported by the RPV support bracket.

3.8.3.4.4 Vent Wall

The vent wall is included in the finite-element model described in Subsection 3.8.1.4.1.1.

The design and analysis is based on the elastic method. All loads are resisted by the integral action of the inner and outer steel cylinders with connecting ribs.

3.8.3.4.5 Gravity Driven Cooling System Pool

The GDCS pool wall is included in the finite-element model described in Subsection 3.8.1.4.1.1.

The design and analysis is based on the elastic method. All loads are resisted by the integral action of the wall plate and support beams.

3.8.3.4.6 Miscellaneous Platforms

The miscellaneous platforms are considered as additional mass in the finite-element model described in Subsection 3.8.1.4.1.1. The platform design is based on the elastic method.

3.8.3.5 Structural Acceptance Criteria

3.8.3.5.1 Diaphragm Floor

[*The structural acceptance criteria for the diaphragm floor are in accordance with ANSI/AISC N690. See Table 3.8-7 for more details.*]*

Text sections that are bracketed and italicized with an asterisk following the brackets are designated as Tier 2. Prior NRC approval is required to change.

3.8.3.5.2 Reactor Pressure Vessel Support Bracket

[*The structural acceptance criteria for the RPV support bracket are in accordance with ANSI/AISC N690. See Table 3.8-7 for more details.*]*

Text sections that are bracketed and italicized with an asterisk following the brackets are designated as Tier 2. Prior NRC approval is required to change.

3.8.3.5.3 Reactor Shield Wall

[*The structural acceptance criteria for the RSW are in accordance with ANSI/AISC N690. See Table 3.8-7 for more details.*]*

Text sections that are bracketed and italicized with an asterisk following the brackets are designated as Tier 2. Prior NRC approval is required to change.

3.8.3.5.4 Vent Wall

[*The structural acceptance criteria for the vent wall are in accordance with ANSI/AISC N690. See Table 3.8-7 for more details.*]*

Text sections that are bracketed and italicized with an asterisk following the brackets are designated as Tier 2. Prior NRC approval is required to change.

3.8.3.5.5 Gravity Driven Cooling System Pool

[*The structural acceptance criteria for the GDCS pool are in accordance with ANSI/AISC N690.*]* See Table 3.8-7 for more details.

Text sections that are bracketed and italicized with an asterisk following the brackets are designated as Tier 2. Prior NRC approval is required to change.

3.8.3.5.6 Miscellaneous Platforms

[*The structural acceptance criteria for safety-related platforms are in accordance with ANSI/AISC N690. See Table 3.8-7 for more details. The same criteria are used for nonsafety-related platforms for design purposes only.*]*

Text sections that are bracketed and italicized with an asterisk following the brackets are designated as Tier 2. Prior NRC approval is required to change.

3.8.3.6 Materials, Quality Control, and Special Construction Techniques

3.8.3.6.1 Diaphragm Floor

[*The materials conform to all applicable requirements of ANSI/AISC N690 and ACI 349 and comply with the following:*

Item	*Specification*
Top and bottom plate	*ASTM A-709 HPS 70W* †
Support beam	*ASTM A-709 HPS 70W* †
Internal stiffeners	*ASTM A-36 or A-709 HPS 70W* †
Concrete fill	*f 'c = 34.5 MPa (5000 psi)*
Stainless cladding for wetted surface of top plate	*ASTM A-240 Type 304L*

† *ASME Code Case N-763*

Different material choices are available from the specifications listed above.]*

Text sections that are bracketed and italicized with an asterisk following the brackets are designated as Tier 2. Prior NRC approval is required to change.

3.8.3.6.2 Reactor Pressure Vessel Support Bracket

[*The steel plate materials conform to all applicable requirements of ANSI/AISC N690 and comply with ASTM A-516 Gr. 70 or A-709 HPS 70W (ASME Code Case N-763). Materials are chosen depending on the thickness of each part.*]*

Text sections that are bracketed and italicized with an asterisk following the brackets are designated as Tier 2. Prior NRC approval is required to change.

3.8.3.6.3 Reactor Shield Wall

[*The materials conform to all applicable requirements of ANSI/AISC N690 and comply with the following:*

Materials are chosen depending on the thickness of each part.

Item	*Specification*
Cylinder Plate	*ASTM A-516 Gr. 70 or ASTM A-668 Gr. F or Gr. G or A-709 HPS 70W (ASME Code Case N-763)*

Different material choices are available from the specification listed above.]*

Text sections that are bracketed and italicized with an asterisk following the brackets are designated as Tier 2. Prior NRC approval is required to change.

3.8.3.6.4 Vent Wall

[*The materials conform to all applicable requirements of ANSI/AISC N690 and ACI 349 and comply with the following:*

Item	*Specification*
Inner and outer cylinders (excluding the portions submerged in the suppression pool)	*ASTM A-709 HPS 70W* †
Internal stiffeners	*ASTM A-36 or A-709 HPS 70W* †
Concrete fill	*f 'c= 34.5 MPa (5000 psi)*
Outer shell submerged in the suppression pool	*ASTM A-709 HPS 70W* † *with A-240 Type 304L clad*
Vent Pipe	*ASTM A-240 Type 304L*

† *ASME Code Case N-763*

Different material choices are available from the specifications listed above.]*

Text sections that are bracketed and italicized with an asterisk following the brackets are designated as Tier 2. Prior NRC approval is required to change.

3.8.3.6.5 Gravity Driven Cooling System Pool

[*The materials conform to all applicable requirements of ANSI/AISC N690 and comply with the following:*

Item	*Specification*
Pool wall plate	*ASTM A-709 HPS 70W † with A-240 Type 304L Clad*
Structural support beam	*ASTM A-709 HPS 70W †, ASTM A-709 HPS 70W † with A-240 Type 304L Clad*
Stiffeners	*ASTM A-36*

† ASME Code Case N-763]*

Text sections that are bracketed and italicized with an asterisk following the brackets are designated as Tier 2. Prior NRC approval is required to change.

3.8.3.6.6 Miscellaneous Platforms

[*The materials conform to all applicable requirements of ANSI/AISC N690 for safety-related and ANSI/AISC 360 for nonsafety-related and comply with the following:*

Item	*Specification*
Structural steel and connections	*ASTM A-36, ASTM A-992 Wide Flanges, A-500 Gr B-Tube Steel*
High strength structural steel plates	*ASTM A-572, Gr. 50 or Gr. 65 (ASME Code Case N-632)*
High strength bolting material [dia. ≥ 19 mm (3/4 in)]	*ASTM A-325*
Carbon steel bolting and threaded rod material [dia. < 19 mm (3/4 in)]	*ASTM A-307*]*

Text sections that are bracketed and italicized with an asterisk following the brackets are designated as Tier 2. Prior NRC approval is required to change.

3.8.3.7 Testing and In-service Inspection Requirements

A formal program of testing and in-service inspection is not planned for the internal structures except the diaphragm floor and vent wall. The other internal structures are not directly related to the functioning of the containment system; therefore, no testing or inspection is performed.

However, during the operating life of the plant the condition of these other internal structures is monitored per 10 CFR 50.65 in accordance with Section 1.5 of RG 1.160.

Testing and in-service inspection of the diaphragm floor and vent wall are directly related to the functioning of the containment system and are discussed in Subsection 3.8.1.7.

Space Control is exercised in the ESBWR by means of a 3D model. It is the means by which interference checking and space control is accomplished. It includes all safety-related and nonsafety-related SSCs. Items are added to the model as it is being developed by stages

depending on criticality to the plant and construction sequence of the item. Accessibility to equipment, valves, instrumentation, welds, supports, etc. for operation, inspection or removal is characterized by sufficient space to allow unobstructed access and reach of site personnel. Therefore, aisles, platforms, ladders, handrails, etc. are reviewed as the components are laid out. Interferences with access ways, doorways, walkways, truck ways, lifting wells, etc. are constantly monitored.

This method of configuration control is maintained and documented during the plant layout process. Remote tooling is considered only if for some layout reasons the required inspection could not be carried out otherwise.

3.8.3.8 Welding Methods and Acceptance Criteria for Structural and Building Steel

Welding activities are performed with written procedures, and with the requirements of the AISC Manual of Steel Construction. The visual acceptance criteria comply with AWS Structural Welding Code D1.1 and Nuclear Construction Issues Group Standard, "Visual Weld Acceptance Criteria for Structural Welding at Nuclear Power Plants", NCIG-01 (also known as EPRI NP-5380).

3.8.4 Other Seismic Category I Structures

Other Seismic Category I structures which are not inside the containment and which constitute the ESBWR Standard Plant are RB, CB, FB and FWSC. Figure 1.1-1 shows the spatial relationship of these buildings. Although the RW that houses non safety-related facilities is not a Seismic Category I structure, it is designed to meet requirements as defined in RG 1.143 under Safety Class RW-IIa. The seismic design of the Radwaste Building is full SSE instead of 1/2 SSE as shown in Table 2 of RG 1.143. The RB and FB are built on a common foundation mat and structurally integrated into one building. The FWSC consists of Firewater Storage Tank (FWS) and Fire Pump Enclosure (FPE) structures that share a common basemat. The other structures in close proximity to these structures are the Turbine Building (TB) and Service Building. The Ancillary Diesel Building is located at least 15.2 m (49 ft. 10-3/8 in.) from the Fuel Building. They are structurally separated from the other ESBWR Standard Plant buildings. [*Seismic gaps are provided with no less than the calculated maximum relative displacement during SSE event, considering out-of-phase motion between independent Nuclear Island buildings to eliminate seismic interaction.*]*

Among the Seismic Category I structures within the ESBWR Standard Plant, other than the containment structure, only the RB contains certain rooms that have high-energy pipes, and therefore these rooms are more structurally demanding. The main steam tunnel walls protect the RB from potential impact by rupture of the high-energy main steam pipes that extend to the TB. Thus the RB walls of the main steam tunnel are designed to accommodate the pipe support forces and the environmental conditions during and after the postulated high-energy pipe break. Longitudinal pipe breaks required by BTP 3-4 of SRP 3.6.2 are postulated inside the main steam tunnel and cause a slight pressurization that is used for environmental qualification. See Subsection 6.2.3.2 for the main steam tunnel functional design.

[*The ESBWR Standard Plant does not contain underground Seismic Category I pipelines that are directly buried in the ground (i.e. all are contained in concrete trenches/tunnels or concrete duct bank) or masonry wall construction.*

Removable shield blocks consisting of metallic forms filled with grout or concrete designed to Seismic Category II requirements are used. The shield blocks are provided with removable structural steel frame also designed to Seismic Category II requirements to prevent the shielding blocks from sliding or tipping under seismic events.]*

Text sections that are bracketed and italicized with an asterisk following the brackets are designated as Tier 2. Prior NRC approval is required to change.

3.8.4.1 Description of the Structures

3.8.4.1.1 Reactor Building Structure

[*Key dimensions of the RB are summarized in Table 3.8-8.*]*

The RB encloses the concrete containment and its internal systems, structures, and components. Located above the concrete containment in the RB are the IC/PCCS pools (including expansion pools), the buffer pool, which is also used to store the dryer, and the equipment storage pool, which is also used to store the chimney partitions and the separator. Main Steam and Feedwater lines are routed to the TB through the Main Steam Tunnel in the RB as described in Subsection 3.8.4. The RB is a Seismic Category I structure.

The RB is a rigid box type shear wall building constructed of reinforced concrete. Vertical loads are carried by a system of external walls box-shaped surrounding a large cylindrical shaped concrete containment.

Lateral loads are resisted by external shear walls as well as the internal concentric cylindrical structure.

These structures are tied together by a system of internal concrete bearing walls and concrete floor slabs.

The load resisting characteristic of the building is that of a concrete box type shear wall structure.

The summary report for the RB is in Appendix 3G Section 3G.1. This report contains a description of the RB, the loads, load combinations, reinforcement stresses, and concrete reinforcement details for the basemat, seismic walls, and floors.

Text sections that are bracketed and italicized with an asterisk following the brackets are designated as Tier 2. Prior NRC approval is required to change.

3.8.4.1.2 Control Building

[*The CB is adjacent to but structurally independent of the RB (see Figures 1.2-2 through 1.2-5 and Figure 1.2-11). The key dimensions of the CB are summarized in Table 3.8-8.*]*

The CB houses the safety-related electrical, control and instrumentation equipment, the control room for the RB and TB and the CBVS equipment. The CB is a Seismic Category I structure that houses control equipment and operation personnel.

The CB is a reinforced concrete box type shear wall structure consisting of walls and slabs and is supported on a foundation mat. Steel framing is composite with concrete slab and is used to support the slabs for vertical loads. The CB is a shear wall structure designed to accommodate

all seismic loads with its walls and connected floors. Therefore, frame members such as beams or columns are designed to resist vertical loads and to accommodate deformations of the walls in case of earthquake conditions.

The summary report for the CB is in Appendix 3G Section 3G.2. This report contains a description of the CB, the loads, load combinations, reinforcement stresses, and concrete reinforcement details for the basemat, seismic walls, and floors.

Text sections that are bracketed and italicized with an asterisk following the brackets are designated as Tier 2. Prior NRC approval is required to change.

3.8.4.1.3 Fuel Building

[*The FB is integrated with the RB, sharing a common wall between the RB and the FB and a large common foundation mat (see Section 1.2). The key dimensions of the FB are summarized in Table 3.8-8.*]*

The FB houses the spent fuel pool facilities and their supporting system and HVAC equipment. The FB is a Seismic Category I structure except for the penthouse that houses HVAC equipment. The penthouse is a Seismic Category II structure.

The FB is a reinforced concrete box type shear wall structure consisting of walls and slabs and is supported on a foundation mat. Concrete or steel framing is composite with a concrete slab and is used to support the slabs for vertical loads. The FB is a shear wall structure designed to accommodate all seismic loads with its walls and connected floors. Therefore, frame members such as beams or columns are designed to resist vertical loads and to accommodate deformations of the walls in case of earthquake conditions.

The summary stress report for the FB is in Appendix 3G Section 3G.3. This report contains a description of the FB, the loads, load combinations, reinforcement stresses, and concrete reinforcement details for the basemat, seismic walls, and floors.

Text sections that are bracketed and italicized with an asterisk following the brackets are designated as Tier 2. Prior NRC approval is required to change.

3.8.4.1.4 Firewater Service Complex

[*The FWSC consists of two FWS and a FPE that share a common basemat. Each FWS is designed with a cylindrical reinforced concrete wall and a dome-shaped reinforced concrete roof and is capable of storing 2082 m^3 (550000 gallons) of water. The FPE is a reinforced concrete box type structure with shear walls and a roof slab that provides enclosure and protection for pumps and tanks. The FWS is lined with a stainless steel plate to prevent leakage of the stored water. The liner plate is not designed to provide structural integrity to the FWS. The key dimensions of the FWSC are summarized in Table 3.8-8.*]*

The summary stress report for the FWSC is in Appendix 3G Section 3G.4. This report contains a description of the FWSC, the loads, load combinations, reinforcement stresses, and concrete reinforcement details for the basemat, seismic walls, and roofs.

Text sections that are bracketed and italicized with an asterisk following the brackets are designated as Tier 2. Prior NRC approval is required to change.

3.8.4.1.5 Radwaste Building

The RW is shown in Section 1.2.

[*The RW is a reinforced concrete box type structure consisting of walls and slabs and is supported on a foundation mat. The key dimensions of the RW are summarized in Table 3.8-8.*]*

The RW houses the equipment and floor drain tanks, sludge phase separators, resin hold up tanks, detergent drain tanks, a concentrated waste tank, chemical drain collection tank, associated pumps and systems for the radioactive liquid and solid waste treatment systems.

[*The RW is a non-seismic category structure. The RW is designed according to the safety classifications defined in RG 1.143 Category RW-IIa.*]* The seismic design of the Radwaste Building is full SSE instead of 1/2 SSE as shown in Table 2 of RG 1.143. The tornado wind loads follow Table 2.0-1 of the DCD Tier 2. Classification RW-IIa SSCs housed within the building are designed to 1/2 SSE.

Text sections that are bracketed and italicized with an asterisk following the brackets are designated as Tier 2. Prior NRC approval is required to change.

3.8.4.1.6 Seismic Category I Cable Trays, Cable Tray Supports, Conduits, and Conduit Supports

Electrical cables are carried on continuous horizontal and vertical runs of steel trays or through steel conduits. The tray and conduit locations are based on the requirements of the electrical cable network. Trays or conduits are supported at intervals by supports made of hot or cold rolled steel sections. The supports are attached to walls, floor, and ceilings of structures as required by the arrangement. The type of support and spacing is determined by allowable tray or conduit spans which are governed by rigidity and stress. Bracing is provided where required. Dynamic Analysis methods are described in Section 3.7. The loads, loading combinations, and allowable stresses are in accordance with applicable codes, standards, and regulations consistent with Tables 3.8-6 and 3.8-9. Analysis methods follow those presented in Sections 3.7 and 3.8. Design and location requirements for conduit and cable tray supports are also specified in Subsections 3.9.2 and 3.10.3.2.

3.8.4.1.7 Seismic Category I HVAC Ducts and HVAC Duct Supports

HVAC duct locations and elevations are based on the requirements of the HVAC system. HVAC ducts are made of steel sheet metal and are supported at intervals by supports made of hot or cold rolled steel sections. The supports are attached to walls, floor, and ceilings of structures as required by the arrangement. The type of support and spacing is determined by allowable duct spans that are governed by rigidity and stress. Bracing is provided where required. Dynamic Analysis methods are described in Section 3.7. The loads, loading combinations, and allowable stresses are in accordance with applicable codes, standards, and regulations consistent with Tables 3.8-6 and 3.8-9. Analysis methods follow those presented in Sections 3.7 and 3.8. Design and location requirements for HVAC Ducts and HVAC Duct supports are also specified in Subsections 3.9.2, 9.4.1, 9.4.2 and 9.4.6.

3.8.4.2 Applicable Codes, Standards, and Specifications

3.8.4.2.1 Reactor Building

The major portion of the RB outside Containment structure is not subjected to the abnormal and severe accident conditions associated with a containment. [*Applicable documents for the RB design are shown in Table 3.8-9, except items 4, 11, 30 and 32.*]*

Text sections that are bracketed and italicized with an asterisk following the brackets are designated as Tier 2. Prior NRC approval is required to change.

3.8.4.2.2 Control Building

[*Applicable documents for the CB design are the same as the RB, which are listed in Table 3.8-9.*]*

Text sections that are bracketed and italicized with an asterisk following the brackets are designated as Tier 2. Prior NRC approval is required to change.

3.8.4.2.3 Fuel Building

[*Applicable documents for the FB design are same as the RB, which are listed in Table 3.8-9. Applicable documents for the spent fuel racks and associated structures are specified in Subsection 9.1.2.*]*

Text sections that are bracketed and italicized with an asterisk following the brackets are designated as Tier 2. Prior NRC approval is required to change.

3.8.4.2.4 Radwaste Building

[*Applicable codes, standards, specifications and regulations used in the design and construction of RW are items 1, 2, and 32 listed in Table 3.8-9.*]*

Text sections that are bracketed and italicized with an asterisk following the brackets are designated as Tier 2. Prior NRC approval is required to change.

3.8.4.2.5 Welding of Pool Liners

All pool liner welds, including the spent fuel pool liner welds, are visually inspected before starting any other NDE method. The visual weld acceptance criteria are defined in AWS Structural Welding Code, D1.1. In accordance with approved procedures, the welded seams of the liner plate are inspected by:

- Liquid Penetrant Examinations. To be carried out on all liner plate butt, fillet, corner and tee welds in accordance with ASME, Section V, Article 6 requirements. The acceptance criteria are in accordance with the requirements of ASME Section III, NE-5352.
- Helium sniffer test or vacuum box technique in accordance with ASME Section V, Article 10 requirements. Any evidence of leakage is unacceptable.

After construction is finished, each isolated pool is leak tested.

The liner welds for all pools outside of the RCCV, including the spent fuel pool, are backed by leak chase channels and a leak detection system to monitor any leakage during plant operation. The leak chase channels are grouped according to the different pool areas and direct any leakage to area drains. This allows both leak detection and determination of where leaks originate. The functioning of the leak chase channels are checked prior to completion of the pool liner installation.

[*For the floor area of the FB spent fuel pool liner that is not occupied by fuel storage racks or other equipment, the liner plates above the leak chase channels have a stainless steel reinforcing strip of material to protect against puncture from dropped objects such as a fuel assembly.*]* The liner plates above the leak chase channels in the RB buffer pool deep pit floor do not require a reinforcing strip of material since the RB buffer pool deep pit floor is fully occupied by high density fuel storage racks or other equipment. These racks or other equipment will shield the RB buffer pool deep pit floor from impacts from dropped objects such as a fuel assembly.

The legs of the free standing spent fuel storage racks rest on bearing pads, which rest on embedded plates that are integral with the fuel building spent fuel pool floor liner plate. The bearing pads are not welded to the embedded plates. The embedded plate carries the rack support reaction loads to the fuel building concrete mat foundation. The embedded plates are anchored to the concrete using anchor studs.

To prevent damage to the fuel building spent fuel pool floor liner plate, a clear gap of at least the maximum displacement under all evaluated loads, including SSE, plus 25 mm (1 in) between all sides of the bearing pad and the edge of the embedded plate will be provided.

Text sections that are bracketed and italicized with an asterisk following the brackets are designated as Tier 2. Prior NRC approval is required to change.

3.8.4.2.6 Firewater Service Complex

Applicable documents for the FWSC design are the same as the RB, which are listed in Table 3.8-9.

3.8.4.3 Loads and Load Combinations

3.8.4.3.1 Reactor Building

3.8.4.3.1.1 Loads and Notations

This section presents only the loads that are applied to the RB directly. Other loads, which are applied to the RCCV only but have effects on RB structures because of common foundation mat, like P_a and T_a, are also considered in the RB design.

Loads and notations are as follows:

D = Dead load of the structure and equipment plus any other permanent loads, including vertical and lateral pressures of liquids.

L = Conventional floor or roof live loads, movable equipment loads, and other variable loads such as construction loads. The following live loads are used:

- Concrete floor slabs – 4.8 kPa (100 psf).
- Concrete roofs – 2.9 kPa (60 psf).
- Construction live load on floor framing in addition to dead weight of floor – 2.4 kPa (50 psf).

Live load L, includes floor area live loads, laydown loads, nuclear fuel and fuel transfer casks, equipment handling loads, trucks, railroad vehicles and similar items. The floor area live load is omitted from areas occupied by equipment whose weight is specifically included in dead load. Live load is not omitted under equipment where access is provided, for instance, an elevated tank on four legs.

The inertial properties include all tributary mass expected to be present in operating conditions at the time of earthquake. This mass includes dead load, stationary equipment, piping and appropriate part of live load established in accordance with the layout and mechanical requirements. In the ESBWR design, 25% of full live load L (designated as L_o), is used in the load combinations that include seismic loads.

However, the live load values used in the governing loading combination for design of local elements such as beams and slabs are the full values.

R_o = Pipe reactions during normal operating or shutdown conditions based on the most critical transient or steady-state condition.

R_a = Pipe reactions under thermal conditions generated by the postulated break and including R_o.

Y_r = Equivalent static load on a structure generated by the reaction on the broken high-energy pipe during the postulated break and including a calculated dynamic factor to account for the dynamic nature of the load.

Y_j = Jet impingement equivalent static load on a structure generated by the postulated break and including a calculated dynamic factor to account for the dynamic nature of the load.

Y_m = Missile impact equivalent static load on a structure generated by or during the postulated break, like pipe whipping, and including a calculated dynamic factor to account for the dynamic nature of the load.

W = Wind force (Subsection 3.3.1)

W_t = Tornado load (Subsection 3.3.2) (tornado-generated missiles are described in Subsection 3.5.1.4, and barrier design procedures in Subsection 3.5.3.)

P_a = Accident pressure at main steam tunnel due to high energy line break.

F = Internal pressures resulting from flooding of compartments.

E' = SSE loads as defined in Section 3.7 including SSE-induced hydrodynamic pressures in pools. The impulsive and convective pressures may be combined by the SRSS method.

T_o = Thermal effects — load effects induced by normal thermal gradients existing through the RB wall and roof. Both summer and winter operating conditions are considered. In all cases, the conditions are considered of long enough duration to result in a straight line temperature gradient. The temperatures are listed in Table 3.8-10. The stress free temperature for the design is 15.5°C (59.9°F).

T_a = Thermal effects (including T_o) which may occur during a design accident.

H = Loads caused by static or seismic earth pressures and water in soil.

3.8.4.3.1.2 Load Combinations for Concrete Members

For the load combinations in this subsection, where any load reduces the effects of other loads, the corresponding coefficient for that load is taken as 0.9, if it can be demonstrated that the load is always present or occurs simultaneously with the other loads. Otherwise, the coefficient for that load is taken as zero.

[*The safety-related concrete structure is designed using the loads, load combinations, and load factors listed in Table 3.8-15. Because a number of concrete structures in the RB are integrally connected with the concrete containment, the load combinations for the concrete containment, which are listed in Table 3.8-2, are additionally considered in the design of the RB concrete structures.*]* The maximum co-directional responses to each of the excitation components for seismic loads are combined by the SRSS method as described in Subsection 3.8.1.3.6.

Text sections that are bracketed and italicized with an asterisk following the brackets are designated as Tier 2. Prior NRC approval is required to change.

3.8.4.3.1.3 Load Combinations for Steel Members

[*The safety-related steel structure is designed using the loads, load combinations, and load factors listed in Table 3.8-16.*]* The maximum co-directional responses to each of the excitation components for seismic loads are combined by the SRSS method as described in Subsection 3.8.1.3.6.

In all these load combinations, both cases of L having its full value or being completely absent are checked.

Text sections that are bracketed and italicized with an asterisk following the brackets are designated as Tier 2. Prior NRC approval is required to change.

3.8.4.3.2 Control Building

[*Refer to the loads, notations, and combinations established in Subsection 3.8.4.3.1, except that fluid pressure F, accident pressure P_a, and pipe break loads Y_r, Y_j, Y_m do not exist.*]* In addition, because the CB is structurally separated from the concrete containment, the load combinations for the concrete containment do not apply to the CB design. The live loads and temperature loads are as follows:

- All concrete floors except for HVAC room – 4.8 kPa (100 psf)
- Concrete floors in HVAC room – 2.9 kPa (60 psf)
- Concrete roof – 2.9 kPa (60 psf)
- Construction live load on floor framing in addition to dead weight of floor – 2.4 kPa (50 psf)

The temperatures during normal operating conditions are shown in Table 3.8-11. The temperatures during abnormal operating conditions are shown in Table 3H-10 and are associated with a postulated loss of HVAC function.

Text sections that are bracketed and italicized with an asterisk following the brackets are designated as Tier 2. Prior NRC approval is required to change.

3.8.4.3.3 Fuel Building

[*Refer to the loads, notations, and combinations established in Subsection 3.8.4.3.1, except that fluid pressure F, accident pressure P_a, and pipe break loads Y_r, Y_j, Y_m do not exist.*]* The accident thermal load, T_a, includes the thermal effects of boiling water at 104ºC (219ºF) in the spent fuel pool which may occur due to loss of FAPCS cooling function. The live loads and temperature loads are as follows:

- All concrete floors except for HVAC room – 4.8 kPa (100 psf)
- Concrete floors in HVAC room – 2.9 kPa (60 psf)
- Concrete roof – 2.9 kPa (60 psf)
- Construction live load on floor framing in addition to dead weight of floor – 2.4 kPa (50 psf)

The temperatures during normal operating conditions are shown in Table 3.8-12.

The spent fuel pool structure (reinforced concrete floor and walls, and steel liner) is evaluated for loads imposed by the spent fuel storage racks in combination with other applicable loads in accordance with the load combinations and acceptance criteria defined in Table 3.8-15. Table 3.8-15 is also applicable to steel liners except that the load factors in load combinations are 1.0 and acceptance criteria are in accordance with ASME Section III Division 2 CC-3700.

Text sections that are bracketed and italicized with an asterisk following the brackets are designated as Tier 2. Prior NRC approval is required to change.

3.8.4.3.4 Radwaste Building

[*Loads and load combinations for the RW are described in Subsection 3.7.2.8.2.*]*

Text sections that are bracketed and italicized with an asterisk following the brackets are designated as Tier 2. Prior NRC approval is required to change.

3.8.4.3.5 Firewater Service Complex

[*Refer to the loads, notations, and combinations established in Subsection 3.8.4.3.1, except that fluid pressure F, accident pressure P_a, accident thermal T_a, accident pipe reactions R_a and pipe break loads Y_r, Y_j, Y_m do not exist.*]* In addition, because the FWSC is structurally separated from the concrete containment, the load combinations for the concrete containment do not apply to the FWSC design. The live loads and temperature loads are as follows:

- All concrete floors (except FWS areas) - 4.8 kPa (100 psf)
- Concrete roof - 2.9 kPa (60 psf)
- Construction live load on floor framing in addition to dead weight of floor - 2.4 kPa (50 psf)

The temperatures during normal operating conditions are shown in Table 3.8-18.

Text sections that are bracketed and italicized with an asterisk following the brackets are designated as Tier 2. Prior NRC approval is required to change.

3.8.4.4 Design and Analysis Procedures

3.8.4.4.1 Reactor Building, Control Building and Fuel Building

The RB, CB and FB are analyzed using the linear elastic finite element computer program NASTRAN described in Appendix 3C.

As described in Subsection 3.8.4.1.3, the RB and FB is integrated into one building. Therefore, the Reactor Building/Fuel Building (RB/FB) structure is analyzed using a common FEA model, which includes the RB and FB and also the concrete containment. The model is described in Appendix 3G Subsection 3G.1.4.1.

The FEA model of the CB includes the entire structure. The details of the FEA model of the CB are described in Appendix 3G Subsection 3G.2.4.1.

The foundation soil is simulated by a set of horizontal and vertical springs in each model. The soil spring constraints are calculated based on the properties of the soil spring used in the SSI analysis model, which is described in Appendix 3A. The constraints by soil surrounding the buildings are conservatively neglected in the FEA models.

3.8.4.4.2 Radwaste Building

The RW is described in Subsection 3.8.4.1.5. The design is in accordance with the criteria in Table 3.8-9 Item 32 for Safety Class RW-IIa.

3.8.4.4.3 Firewater Service Complex

As described in Subsection 3.8.4.1.4, the FWSC consists of two FWS and a FPE that share a common basemat. Therefore, the FWSC structures are analyzed using a common FEA model, which includes the two FWS and a FPE. The model is described in Appendix 3G, Subsection 3G.4.4.1.

The foundation soil is simulated by a set of horizontal and vertical springs in the model. The soil spring constraints are calculated based on the properties of the soil spring used in the soil-structure interaction (SSI) analysis model, which is described in Appendix 3A.

3.8.4.5 Structural Acceptance Criteria

3.8.4.5.1 Reactor Building

[*The acceptance criteria for the design of the safety-related reinforced concrete structure are included in Table 3.8-15. "U" in Table 3.8-15 is the section strength required to resist design loads based on the strength design method described in Table 3.8-9 item 1 and in SRP 3.8.4 Section II.3. For the acceptance criteria for the load combinations in Table 3.8-2, which is also applicable to the RB concrete design, refer to Subsection 3.8.1.5.*

The RB is designed to the more limiting acceptance criteria of the ASME Section III, Division 2, Subsection CC and ACI 349-01. The relevant acceptance criteria are allowable compressive stress in concrete, allowable tensile and compressive stresses in reinforcing steel, and allowable transverse shear stress for the design of RB concrete elements. For a combination of axial force and bending moment, the acceptance criteria of ASME Section III, Division 2, Subsection CC are more limiting than ACI 349-01 and are applied in the RB design. The acceptance criteria for transverse shear are essentially the same between ASME Section III, Division 2, Subsection CC and ACI 349-01. Therefore, the ACI-349-01 acceptance criteria for transverse shear are applied in the RB design. The aforementioned acceptance criteria is also applicable to the additional peripheral volumes for anchoring the containment reinforcement, which are shown in Figure 3.8-1.

The acceptance criteria for the design of the safety-related steel structure are included in Table 3.8-16. Allowable elastic working stress, S, is the allowable stress limit specified in Part 1 of ANSI/AISC N690.

The design criteria preclude excessive deformation of the RB.]*

Text sections that are bracketed and italicized with an asterisk following the brackets are designated as Tier 2. Prior NRC approval is required to change.

3.8.4.5.2 Control Building

[*The acceptance criteria for the design of the safety-related reinforced concrete structure are included in Table 3.8-15. "U" in Table 3.8-15 is the section strength required to resist design loads based on the strength design method described in Table 3.8-9 item 1 and in SRP 3.8.4 Section II.3.*

The acceptance criteria for the design of the safety-related steel structure are included in Table 3.8-16. Allowable elastic working stress, S, is the allowable stress limit specified in Part 1 of ANSI/AISC N690. The design criteria preclude excessive deformation of the CB.]*

Text sections that are bracketed and italicized with an asterisk following the brackets are designated as Tier 2. Prior NRC approval is required to change.

3.8.4.5.3 Fuel Building

[*The acceptance criteria for the design of the FB are same as the RB in Subsection 3.8.4.5.1.*]*

Text sections that are bracketed and italicized with an asterisk following the brackets are designated as Tier 2. Prior NRC approval is required to change.

3.8.4.5.4 Radwaste Building

[*Structural acceptance criteria and materials criteria for the RW is in accordance with Item 32 in Table 3.8-9 for Safety Class RW-IIa.*]*

Text sections that are bracketed and italicized with an asterisk following the brackets are designated as Tier 2. Prior NRC approval is required to change.

3.8.4.5.5 Firewater Service Complex

[*The acceptance criteria for the design of the FWSC are the same as the CB, which is discussed in Subsection 3.8.4.5.2.*]*

Text sections that are bracketed and italicized with an asterisk following the brackets are designated as Tier 2. Prior NRC approval is required to change.

3.8.4.6 Material, Quality Control and Special Construction Techniques

This subsection contains information related to the materials, QC and special construction techniques used in the construction of other Seismic Category I structures.

3.8.4.6.1 Concrete

[*The specified compressive strength of concrete at 28 days, or earlier, is 4000 psi for the foundation mat and 5000 psi for other structures. Concrete material is the same as described in Subsection 3.8.1.6.1 with the following exception: Concrete is batched and placed according to ACI 349-01.*]*

Text sections that are bracketed and italicized with an asterisk following the brackets are designated as Tier 2. Prior NRC approval is required to change.

3.8.4.6.2 Reinforcing Steel

[*Reinforcing steel is the same as in Subsection 3.8.1.6.2.*]*

Text sections that are bracketed and italicized with an asterisk following the brackets are designated as Tier 2. Prior NRC approval is required to change.

3.8.4.6.3 Splices of Reinforcing Steel

[*Splices of reinforcing steel are the same as in Subsection 3.8.1.6.3 except that placing and splicing is in accordance with ACI 349-01. Welding of reinforcing bars complies with all the applicable requirements of ASME Code Section III, Division 2.*]*

Text sections that are bracketed and italicized with an asterisk following the brackets are designated as Tier 2. Prior NRC approval is required to change.

3.8.4.6.4 Quality Control

QC is the same as in Subsection 3.8.1.6.5 except that the Construction Specifications reference ACI 349-01 and applicable Regulatory Guides. [*For welding of reinforcing bars, inspection and documentation requirements conform to ASME Code Section III, Division 2 also.*]*

Text sections that are bracketed and italicized with an asterisk following the brackets are designated as Tier 2. Prior NRC approval is required to change.

3.8.4.6.5 Special Construction Techniques

No special construction techniques are employed other than that some of the components, such as rebar cages, are pre-assembled and lifted into place.

3.8.4.6.6 Structural Steel Including Plates

Structural steel conforms to ASTM A-36, A-500 Gr. B HSS, A-572 Gr. 50 or A-992 W Shapes. Plates conform to ASTM A-36 or ASME SA-516 Gr. 70.

3.8.4.7 Testing and In-Service Inspection Requirements

Other Seismic Category I structures are monitored per NUREG-1801 and 10 CFR 50.65 as clarified in RG 1.160, in accordance with Section 1.5 of RG 1.160.

3.8.5 Foundations

This section describes foundations for all Seismic Category I structures of the ESBWR Standard Plant.

3.8.5.1 Description of the Foundations

The RB including the containment and FB are built on a common foundation mat as described in Subsection 3.8.4. The foundation of the CB is separated from the foundation of the RB and FB.

[*The foundation of the RB and FB is a rectangular reinforced concrete mat. Its key dimensions are shown in Table 3.8-13*]*. The foundation mat is constructed of cast-in-place conventionally reinforced concrete. It supports the RB, the FB, the containment structure, and other internal structures. The containment structure foundation is defined as within the perimeter or the exterior surface of the containment structure. The containment foundation mat details are discussed in Subsection 3.8.1.1.1.

[*The CB foundation is rectangular reinforced concrete mat. The key dimensions are included in Table 3.8-13.*]*

The foundation for Category I structures is contained in the summary stress reports for their respective buildings. The RB foundation is contained in Appendix 3G Section 3G.1, the CB foundation is in Appendix 3G Section 3G.2, and the FB foundation is in Appendix 3G Section 3G.3. The summary stress report contains a section detailing safety factors against sliding, over turning, and flotation.

As described in Subsection 3.8.4.1.4, the FWSC consists of two FWS and a FPE that share a common basemat. The foundation of the FWSC is separated from the foundations of the RB/FB and CB. [*The foundation of the FWSC is a rectangular reinforced concrete mat. Its key dimensions are shown in Table 3.8-13.*]* The foundation mat is constructed of cast-in-place conventionally reinforced concrete. It supports the two FWS and their contents, FPE and other associated SSCs. Details of the foundation design and analysis for the FWSC, including foundation stability evaluation are contained in Appendix 3G, Section 3G.4.

Text sections that are bracketed and italicized with an asterisk following the brackets are designated as Tier 2. Prior NRC approval is required to change.

3.8.5.2 Applicable Codes, Standards and Specifications

[*The applicable codes, standards and specifications for the containment foundation and for the other Seismic Category I foundations are the same as those for their respective superstructures consistent with SRP 3.8.5 Section II.2.*]*

The applicable codes, standards, specifications and regulations are discussed in Subsection 3.8.1.2 for the containment foundation and in Subsection 3.8.4.2 for the other Seismic Category I foundations.

The jurisdictional boundary for application of Section III, Division 2 of the ASME Code to the concrete containment foundation is discussed in Subsection 3.8.1.1.3.

Text sections that are bracketed and italicized with an asterisk following the brackets are designated as Tier 2. Prior NRC approval is required to change.

3.8.5.3 Loads and Load Combinations

[*The loads and load combinations for the containment foundation and for the other Seismic Category I foundations are the same as those for their respective superstructures with additional foundation stability requirements consistent with SRP 3.8.5 Section II.3.*]*

The loads and load combinations for the containment foundation mat are given in Subsection 3.8.1.3. The loads and load combinations for the other Seismic Category I structure foundations are given in Subsection 3.8.4.3.

[*The loads and load combinations for all Seismic Category I foundations examined to check against sliding and overturning due to earthquakes, winds and tornados, and against flotation due to floods are listed in Table 3.8-14.*]*

Text sections that are bracketed and italicized with an asterisk following the brackets are designated as Tier 2. Prior NRC approval is required to change.

3.8.5.4 Design and Analysis Procedures

The foundations of Seismic Category I structures are analyzed using the methods where the transfer of loads from the foundation mat to the supporting foundation media is determined by elastic methods.

Bearing walls and columns carry all the vertical loads from the structure to the foundation mat. Lateral loads are transferred to shear walls by the roof and floor diaphragms. The shear walls then transmit the loads to the foundation mat.

The design of the mat foundations for the structures of the plant involves primarily determining shear and moments in the reinforced concrete and determining the interaction of the substructure with the underlying foundation medium. For a mat foundation supported on soil or rock, the main objectives of the design are (1) to maintain the bearing pressures within allowable limits, particularly due to overturning forces, and (2) to ensure that there is adequate frictional and passive resistance to prevent sliding of the structure when subjected to lateral loads.

The foundation mats for the Concrete Containment, RB/FB, CB and FWSC are analyzed using the linear elastic finite element computer program NASTRAN as described in Subsections 3.8.1.4.1.1, 3.8.4.4.1 and 3.8.4.4.3. The type of finite elements used to model the foundation mat is the thick shell type of elements that account for out-of-plane shear deformation also. The foundation mat resists out-of-plane forces applied from superstructures and foundation soil. Bending moments in the foundation mat are evaluated for the resultant out-of-plane forces. The foundation soil is modeled with elastic springs and connected to the foundation mat elements in the FEA model. By means of using this method, the SSI is considered in the foundation design, and the requirement of SRP 3.8.5 II 4.a is satisfied.

The design loads considered in analysis of the foundations are the worst resulting forces from the superstructures and loads directly applied to the foundation mat due to static and dynamic load combinations.

The worst case scenario for foundation base mat design is the soft soil because it is subject to largest deformation. From the NASTRAN analysis the results are scanned for the highest loads in the mat sections and are selected for checking the section. This enveloping of most severe loading is done for all loading considered in the analysis. In order to confirm the appropriateness of this condition, basemat deformation and sectional moment are compared between the soft soil case [Vs = 300 m/sec (984 ft/sec)] and the hard rock case [Vs = 1700 m/sec (5577 ft/sec)]. Basemat deformation for the soft soil condition is much larger than that of the hard rock condition. Bending moments for the soft soil are larger than those for the hard rock with few exceptions. The higher bending moments at some locations for the hard rock site have no effect on the design because they are much less than the maximum moments of the soft soil site on which rebar sizing is based.

In the global FEA model the soil springs are assumed to be two-way springs capable of withstanding compression and tension. To evaluate the effect of potential uplift of the basemat under seismic loads, the soil springs, once in tension, are removed through an iterative process. This iterative process is continued until there are no more springs in tension. The analysis results confirmed the adequacy of the basemat design. Details are provided in Appendix 3G.1.5.5.1.

The selected waterproofing material for the bottom of the basemat is a chemical crystalline powder that is added to the mud mat mixture forming a water proof barrier when cured. No membrane waterproofing is used under the foundations in the ESBWR.

The standard ESBWR design is developed using a range of soil conditions as detailed in Appendix 3A. The minimum requirements for the physical properties of the site-specific subgrade materials are furnished in Table 2.0-1. Stability of subsurface materials and foundations are addressed in Table 2.0-2, Subsection 2.5.4. Settlement of the foundations, and differential settlement between foundations for the site-specific foundations medium, is calculated, and safety-related systems (i.e., piping, conduit, etc.) designed for the calculated

settlement of the foundations. The effect of the site-specific subgrade stiffness and calculated settlement on the design of the Seismic Category I structures and foundations is evaluated.

A detailed description of the analytical and design methods for the foundations of the RB including the containment, CB, FB and FWSC is included in Appendix 3G.

3.8.5.5 Structural Acceptance Criteria

[*The structural acceptance criteria for the containment foundation and for the other Seismic Category I foundations are the same as those for their respective superstructures with additional foundation stability requirements consistent with SRP 3.8.5 Section II.5.*]*

The main structural criteria for the containment portion of the foundation are to provide adequate strength to resist loads and sufficient stiffness to protect the containment liner from excessive strain. The acceptance criteria for the containment portion of the foundation mat are presented in Subsection 3.8.1.5. The structural acceptance criteria for the RB, CB, FB and FWSC foundations are described in Subsection 3.8.4.5.

[*The allowable factors of safety of the ESBWR structures for overturning, sliding, and flotation are included in Table 3.8-14.*]* The calculated factors of safety are shown in Appendix 3G for each foundation mat evaluated according to the following procedures.

The factor of safety against overturning due to earthquake loading is determined by the energy approach described in Subsection 3.7.2.14.

The factor of safety against sliding is defined as:

$$FS = (F_{ub} + F_{us} + F_r + F_{us}' + F_r')/(F_v + F_o)$$

Notations are as follows:

F_{ub} = Friction resistance force provided at the potential sliding plane.

F_{us} = Skin friction resistance force provided by basemat side parallel to the direction of motion.

F_r = Lateral resistance pressure along the wall and basemat opposite to the direction of motion, provided that the wall capacity passive pressure is not exceeded.

F_{us}' = Skin friction resistance force provided by shear key side parallel to the direction of motion (when shear keys are used).

F_r' = Lateral resistance pressure along the shear key opposite to the direction of motion (when shear keys are used).

F_v = Base shear at the basemat bottom.

F_o = Lateral soil force due to surcharge load of adjacent structure, as applicable.

The sliding evaluation is performed for two orthogonal horizontal directions separately. In each direction the horizontal SSE shear and vertical SSE force at the base are combined in a time consistent manner at each time step when the input motions are statistically independent. Alternately, the maximum horizontal SSE base shear may be combined with the maximum vertical SSE force acting upward. The total vertical load at the base takes into account the dead loads and buoyancy force.

The factor of safety against flotation is defined as:

$$FS = F_{DL}/F_B$$

Notations are as follows:

F_{DL} = Downward force due to dead load.

F_B = Upward force due to buoyancy.

Text sections that are bracketed and italicized with an asterisk following the brackets are designated as Tier 2. Prior NRC approval is required to change.

3.8.5.6 Materials, Quality Control, and Special Construction Techniques

[*The foundations of Seismic Category I structures are constructed of reinforced concrete using proven methods common to heavy industrial construction. For further discussion, see Subsection 3.8.1.6 for the containment foundation mat and Subsection 3.8.4.6 for the foundations of the other Seismic Category I structures.*]*

Text sections that are bracketed and italicized with an asterisk following the brackets are designated as Tier 2. Prior NRC approval is required to change.

3.8.5.7 Testing and In-Service Inspection Requirements

The foundations of Seismic Category I structures are monitored per NUREG-1801 and 10 CFR 50.65 as clarified in Section 1.5 of RG 1.160.

3.8.6 Special Topics

3.8.6.1 Foundation Waterproofing

[*The selected waterproofing material for the bottom of the basemat is a chemical crystalline powder that is added to the mud mat mixture forming a water proof barrier when cured. For the vertical edges of the basemat, spray-type crystalline waterproofing compound will be applied in accordance with manufacturer application procedures. No membrane waterproofing is used under the foundations in ESBWR.*]*

Contraction joints are made after the mud mat concrete is poured to control cracks. The width and spacing of the contraction joints follow the common practice for pavements. The spray-type crystalline waterproofing compound applied on the top surface of the mud mat will fill up cracks in the mud mat that have been formed. After application of the crystalline waterproofing compound, which has a self-healing capability up to a 0.4 mm crack width, this waterproofing compound will be able to eliminate cracks in the mud mat concrete.

The type of the waterproofing system applied to the exterior walls is sheet-applied barrier materials described in Section 4.2.1.4 of ACI 515.1R-79 (revised 1985) (e.g. non-vulcanized butyl rubber sheet). The minimum thickness of the waterproofing sheet is 2.0 mm. Two layers of sheets are applied to the exterior walls below grade.

Text sections that are bracketed and italicized with an asterisk following the brackets are designated as Tier 2. Prior NRC approval is required to change.

3.8.6.2 Site-Specific Physical Properties and Foundation Settlement

[*See Table 2.0-1 for soil properties requirements of site-specific foundation bearing capacities, minimum shear wave velocity, liquefaction potential, angle of internal friction and maximum settlement values for Seismic Category I buildings.*]*

For sites not meeting the soil property requirements, a site-specific analysis is required to demonstrate that site-specific conditions are enveloped by the standardized design.

Text sections that are bracketed and italicized with an asterisk following the brackets are designated as Tier 2. Prior NRC approval is required to change.

3.8.6.3 Structural Integrity Pressure Result

See DCD Tier 1 Table 2.15.1-2 for the SIT of the containment structure, which is an ITAAC item.

3.8.6.4 Identification of Seismic Category I Structures

See Subsections 3.8.1, 3.8.2, 3.8.3 and 3.8.4 for identification of Seismic Category I structures.

3.8.6.5 Foundation Mud Mat

The mud mat is designed as structural plain concrete in accordance with ACI 318-05. The specified compressive strength of concrete at 28 days, or earlier, is 17.3 MPa (2500 psi) for the mud mat. The thickness of the mud mat is no less than 200 mm (8 in.). The performance testing requirements for the mud mat are those delineated in ACI 318-05. The mud mat construction is performed in accordance with the same standards and requirements as the basemat. The top surface of the mudmat is intentionally roughened in accordance with ACI 349-01 Subsection 11.7.9 requirement.

In order to ensure that the failure surface can only occur within the soil below the mud mat and to justify the use of a 0.7 coefficient of friction in the sliding evaluation, troughs are provided on the ground surface before the mud mat is poured. The size of the troughs is approximately 150 mm (6 in) wide and 100 mm (4 in) deep. They are arranged in a grid pattern with no larger than a 2.5 m (8.2 ft) spacing distributed over the footprint of the mud mat.

3.8.7 References

3.8-1 GE Hitachi Nuclear Energy, "ESBWR PCCS Condenser Structural Evaluation," NEDE-33572P, Class II (Proprietary), Revision 0, March 2010; NEDO-33572, Revision 0, Class I (Non-proprietary), March 2010.

[***Table 3.8-1***

Key Dimensions of Concrete Containment

Portion	***Dimension***	***Notes***
Foundation mat	*Thickness = 5.1 m*	
Containment wall	*Thickness = 2.0 m*	
	Inside radius = 18.0 m	
	Height = 19.95 m	*From the top of the suppression pool slab to the bottom of the top slab*
RPV pedestal (Part of Lower Containment)	*Thickness = 2.5 m*	
	Inside radius = 5.6 m	
	Height = 15.05 m	*From the top of the foundation mat to the top of the suppression pool slab*
Top slab	*Thickness = 2.4 m*	
Suppression pool slab	*Thickness = 2.0 m*	]*

Text sections that are bracketed and italicized with an asterisk following the brackets are designated as Tier 2. Prior NRC approval is required to change.

SI to U.S. Customary units conversion (SI units are the controlling units and U.S. Customary units are for reference only):

1 m = 3.28 ft

[*Table 3.8-2*

Load Combinations, Load Factors and Acceptance Criteria for the Reinforced Concrete Containment[(1),(2),(3),(7)]

Description	No.	Load Conditions																Acceptance Criteria[(6)]
		D	L	P_t	P_o	P_a	T_t	T_o	T_a	E'	W	W'	R_o	R_a	Y[(4)]	SRV	$LOCA$	
Service																		
Test	1	1.0	1.0	1.0			1.0											S
Construction	2	1.0	1.0					1.0			1.0							S
Normal	3	1.0	1.0		1.0			1.0					1.0			1.0		S
Factored																		
Severe Environmental	4	1.0	1.3		1.0			1.0			1.5		1.0			1.3		U
Extreme	5	1.0	1.0		1.0			1.0		1.0			1.0			1.0		U
Environmental	6	1.0	1.0		1.0			1.0				1.0	1.0			1.0		U
Abnormal	7	1.0	1.0			1.5			1.0					1.0		1.25	Note[(5)]	U
	8	1.0	1.0			1.0			1.0					1.25		1.0	Note[(5)]	U
	9	1.0	1.0			1.25			1.0					1.0		1.25	Note[(5)]	U
Abnormal/Severe Environmental	10	1.0	1.0			1.25			1.0		1.25			1.0		1.0	Note[(5)]	U
Abnormal/ Extreme Environmental	11	1.0	1.0			1.0			1.0	1.0				1.0	1.0	1.0	Note[(5)]	U

(1) *The loads are described in Subsection 3.8.1.3 and acceptance criteria in Subsection 3.8.1.5.*

(2) *For any load combination, if the effect of any load component (other than D) reduces the combined load, then the load component is deleted from the load combination.*

(3) *Because P_a, T_a, SRV and LOCA are time-dependent loads, their effects are superimposed accordingly.*

(4) *Y includes Y_j, Y_m and Y_r.*

(5) *LOCA loads, CO, CHUG and Pool Swell (PS) are time-dependant loads for which DLF may be used. The sequence of occurrence is given in Appendix 3B. The load factor for LOCA loads is the same as the corresponding pressure load P_a. LOCA loads include hydrostatic pressure (with a load factor of 1.0) due to containment flooding.*

(6) *S = Allowable Stress as in ASME Section III, Div. 2, Subsection CC-3430 for Service Load Combination. U = Allowable Stress as in ASME Section III, Div. 2, Subsection CC-3420 for Factored Load Combination.*

(7) *The peak responses of dynamic loads do not occur at the same instant. SRSS method to combine peak dynamic responses is acceptable for concrete structures.*]*

Text sections that are bracketed and italicized with an asterisk following the brackets are designated as Tier 2. Prior NRC approval is required to change.

[*Table 3.8-3*

Major Allowable Stresses in Concrete and Reinforcing Steel

	Concrete		*Reinforcing Steel*	
	Compression	*Tangential Shear*	*Tension*	
Service Load Combination	***Foundation*** *12.4 MPa (For primary case)* *16.6 MPa (For primary plus secondary case)* ***Top Slab*** *18.6 MPa (For primary case)* *24.8 MPa (For primary plus secondary case)* ***Others*** *15.5 MPa (For primary case)* *20.7 MPa (For primary plus secondary case)*	*(1) Provided by concrete* $v_c = 0$ *(2) Provided by orthogonal reinforcement* $v_{so} =$ $0.415\sqrt{f'_c} = 2.18$ *MPa (For foundation)* $= 2.67$ *MPa (For top slab)* $= 2.44$ *MPa (For others)*	*206.8 MPa* *273.0 MPa* *310.2 MPa*	*(For primary case)* *(For primary plus secondary case)* *(For test pressure case)*
Factored Load Combination	***Foundation*** *20.7 MPa (For primary case)* *23.5 MPa (For primary plus secondary case)* ***Top Slab*** *31.1 MPa (For primary case)* *35.2 MPa (For primary plus secondary case)* ***Others*** *25.9 MPa (For primary case)* *29.3 MPa (For primary plus secondary case)*	*(1) Provided by concrete* $v_c = 0$ *(2) Provided by orthogonal reinforcement* $v_{so} =$ $0.830\sqrt{f'_c} = 4.36$ *MPa (For foundation)* $= 5.34$ *MPa (For top slab)* $= 4.88$ *MPa (For others)*	*372.2 MPa*	

Note: f'_c *is in MPa*]*

Text sections that are bracketed and italicized with an asterisk following the brackets are designated as Tier 2. Prior NRC approval is required to change.

SI to U.S. Customary units conversion (SI units are the controlling units and U.S. Customary units are for reference only):

1 MPa = 145.038 psi

[*Table 3.8-4*

Load Combination, Load Factors and Acceptance Criteria for Steel Containment Components of the RCCV (1), (2), (3)

Service Level	No	Load Combination (1)																	Acceptance Criteria			
		D	L	P_t	P_o	P_a	T_t	T_o	T_a	E'	W	W'	R_o	R_a	Y (4)	SRV (12)	DET (12)	$LOCA$ (5)(12),	P_m	P_L	P_L+P_b (8)	P_L+P_b+Q
Test Condition	1	1.0	1.0	1.0			1.0												0.75 S_y	1.15Sy	1.15Sy (11)	N/A (10)
Design Condition	2	1.0	1.0			1.0			1.0					1.0					1.0 S_{mc}	1.5 S_{mc}	1.5 S_{mc}	N/A
Level A, B (9)	3	1.0	1.0		1.0			1.0					1.0						1.0 S_{mc}	1.5 S_{mc}	1.5 S_{mc}	3.0 S_{m1}
	4	1.0	1.0		1.0			1.0								1.0						
	5	1.0	1.0			1.0			1.0					1.0				1.0				
	6	1.0	1.0			1.0			1.0					1.0		1.0		1.0				
Level C (6)	7	1.0	1.0		1.0			1.0		1.0			1.0						1.2 S_{mc} or* 1.0 S_y	1.8 S_{mc} or* 1.5S_y	1.8 S_{mc} or* 1.5S_y	N/A
	8	1.0	1.0			1.0			1.0	1.0				1.0		1.0		1.0				
	9	1.0	1.0			1.0			1.0	1.0				1.0				1.0				
Level D (7)	10	1.0	1.0			1.0			1.0	1.0				1.0	1.0	1.0		1.0	S_f	1.5S_f	1.5S_f	N/A
	11	1.0	1.0			1.0			1.0	1.0				1.0	1.0			1.0				
	12(13)	1.0	1.0						1.0	1.0							1.0					

Notes:

(1) *The loads are described in Subsection 3.8.1.3.*

(2) *For any load combination, if the effects of any load component (other than D) reduces the combined load, then the load component is deleted from the load combination.*

(3) P_a ,T_a, *SRV and LOCA are time-dependent loads. The sequence of occurrence is given in Appendix 3B.*

(4) *Y includes* Y_j, Y_m *and* Y_r.

(5) *LOCA loads include CO, CHUG and PS. They are time-dependent loads. The sequence of occurrence is given in Appendix 3B. LOCA loads include hydrostatic pressure (with a load factor of 1.0) due to containment flooding.*

(6) *Limits identified by (*) indicate a choice of the larger of the two.*

(7) S_f *is 85% of the general primary membrane allowable permitted in Appendix F, ASME B&PV Code, Section III. In the application of Appendix F,* S_{m1}, *if applicable, is as specified in Section II, Part D, Subpart 1, Tables 2A and 2B of ASME B&PV Code, which is the same as* S_m.

(8) *Values shown are for a rectangular section. See NE-3221.3(d) for other than a solid rectangular section.*

(9) *The allowable stress intensity* S_{m1} *is the* S_m *listed in Section II, Part D, Subpart 1, Tables 2A and 2B of the ASME B&PV Code. The allowable stress intensity* S_{mc} *is 1.1 times the* S_m *listed in Section II, Part D, Subpart 1, Tables 1A and 1B of the ASME B&PV Code, except that* S_{mc} *does not exceed 90% of the material's yield strength at temperature shown in Section II, Part D, Subpart 1, Tables Y-1 of the ASME B&PV Code.*

(10) *N/A = No evaluation required.*

(11) *Bending and General Membrane* P_m+P_b.

(12) *The peak responses of dynamic loads do not occur at the same instant. SRSS method to combine peak dynamic responses is acceptable for steel structures.*]*

(13) *These loads are applicable only to the PCCS condenser.*

Text sections that are bracketed and italicized with an asterisk following the brackets are designated as Tier 2. Prior NRC approval is required to change.

[*Table 3.8-5*

Welding Activities and Weld Examination Requirements for Containment Vessel

Component	*Weld Type*	*NDE Requirements*
Steel components[(1)] (no concrete backing, ASME Section III, Division 1, Subsection NE)	*Category A, Butt welds (Long'l)*	*RT[(2)]*
	Category B, Butt welds (Circ.)	*RT[(2)(3)]*
	Category C, Butt welds	*RT[(2)]*
	Category C, Nonbutt welds	*UT or MT or PT*
	Category D, Butt welds	*RT[(2)]*
	Category D, Nonbutt welds	*UT or MT or PT*
	Structural attachment welds *a) Butt welds* *b) Nonbutt welds*	 *RT[(2)]* *UT or MT or PT*
	Special welds, Weld metal cladding	*PT*
Containment liner[(4)] (with concrete backing, ASME Section III, Division 2, Subsection CC)	*Category A, Butt welds (Long'l)*	*RT[(5)]*
	Category B, Butt welds (Circ.)	*RT[(5)]*
	Category D, Butt welds	*RT[(5)]*
	Category D, Nonbutt welds	*UT or MT or PT[(6)]*
	Categories E, F, G, J, and Full Penetration H	*UT or MT or PT[(6)]*
	Structural attachment welds	*MT or PT*
	Special welds, Weld metal cladding	*PT*

NOTES:

(1) Welded joint locations of the Categories are shown in Figure NE-3351-1 of the ASME Section III. Welding activities and welding examinations comply with the provisions of the ASME Section III Subsection NE.
Backing bars are not used in weld joints in flued-head containment penetration assemblies or other penetration sleeves and process piping.

(2) When the joint detail does not permit radiographic examination, UT plus MT or PT is substituted as permitted by ASME Section III, Division 1, Subarticle NE-5280.

(3) Surface examination of the root pass and completed weld is substituted in electrical penetration assemblies for RT per ASME Section III, Division 1, Subarticles NE-3352.2 (b) and NE-5280.

(4) Welded joint locations of the Categories are shown in Figure CC-3831-1 of the ASME Section III. Welding activities and welding examinations comply with the provisions of the ASME Section III Subsection CC.

(5) RT is used for welds without backup bars. For welds with backup bars MT or UT is used.

(6) Only for austenitic welds, liquid penetrant shall be substituted for magnetic particle examination.

LEGEND:

RT – Radiographic Examination *PT – Liquid Penetrant Examination*
MT – Magnetic Particle Examination *UT – Ultrasonic Examination*]*

Text sections that are bracketed and italicized with an asterisk following the brackets are designated as Tier 2. Prior NRC approval is required to change.

[*Table 3.8-6*

Codes, Standards, Specifications, and Regulations Used in the Design and Construction of Seismic Category I Internal Structures of the Containment

Specification Reference Number	*Specification or Standard Designation*	*Title*
1	*ACI 301-05*	*Specifications for Structural Concrete*
2	*ACI 347-04*	*Guide to Formwork for Concrete*
3	*ACI 305R-99*	*Hot Weather Concreting*
4	*ACI 211.1-91*	*Standard Practice for Selecting Proportions for Normal, Heavy Weight and Mass Concrete*
5	*ACI 315-99*	*Details and Detailing of Concrete Reinforcement*
6	*ACI 306.1-90*	*Standard Specification for Cold Weather Concreting (Reapproved 2002)*
7	*ACI 309R-05*	*Guide for the Consolidation of Concrete*
8	*ACI 308.1-98*	*Standard Specification for Curing Concrete*
9	*ACI 212.3R-04*	*Chemical Admixtures for Concrete*
10	*ACI 214R-02*	*Evaluation of Strength Test Results of Concrete*
11	*ACI 311.5-04*	*Guide for Concrete Plant Inspection and Testing of Ready-Mixed Concrete*
12	*ACI 304R-00*	*Guide for Measuring, Mixing, Transporting, and Placing Concrete*
13	*ACI 349-01/349R-01*	*Code Requirements for Nuclear Safety-Related Concrete Structures and Commentary*
14	*Not Used.*	
15	*ANSI/AISC N690-1994 (R2004) and S2*	*Specification for the Design, Fabrication, and Erection of Steel Safety-Related Structures for Nuclear Facilities and Supplement No. 2*[(1)]
16	*AWS D1.1/D1.1M 2004*	*Structural Welding Code – Steel (AWS D1.1/D1.1M) Rev. 05*
17	*EPRI NP-5380, 1987*	*NCIG-01 - Visual Weld Acceptance Criteria for Structural Welding at Nuclear Power Plants, Rev. 2, Sep. 1987.*
18	*ANSI/ASME NQA-1-1983*	*Quality Assurance Program Requirements for Nuclear Facilities, 1983 Edition with NQA-1a-1983 Addenda, (Reference Section 17.0)*
19	*Regulatory Guide 1.54*	*Service Level I, II and III Protective Coatings Applied to Nuclear Power Plants, Rev. 1, July 2000.*
20	*Regulatory Guide 1.94*	*Quality Assurance Requirements for Installation, Inspection, and Testing of Structural Concrete and Structural Steel During the Construction Phase of Nuclear Power Plants, Rev. 1 and Draft 2.*
21	*Regulatory Guide 1.136*	*Design Limits, Loading Combinations, Materials, Construction, and Testing of Concrete Containments, Rev. 3, March 2007.*
22	*Regulatory Guide 1.142*	*Safety-Related Concrete Structures for Nuclear Power Plants (Other than Reactor Vessels and Containments), Nov. 2001*

[*Table 3.8-6*

Codes, Standards, Specifications, and Regulations Used in the Design and Construction of Seismic Category I Internal Structures of the Containment

Specification Reference Number	*Specification or Standard Designation*	*Title*
23	*Regulatory Guide 1.199*	*Anchoring Components and Structural Supports in Concrete, November 2003.*
24	*(Deleted)*	
25	*ASME/ANSI AG-1-2003*	*Code on Nuclear Air and Gas Treatment*
26	*AISI CF02-1*	*AISI Specification for the Design of Cold-Formed Steel Structural Members, AISI 2001 Edition and 2004 Supplement*
27	*SMACNA 1481, Third Edition, 2005*	*HVAC Duct Construction Standards-Metal and Flexible*
28	*IEEE-344-1987*	*Recommended Practices for Seismic Qualification of Class IE Equipment for Nuclear Power Generating Stations*

Explanation of Abbreviation

ACI	*American Concrete Institute*
AISC	*American Institute of Steel Construction*
AISI	*American Iron and Steel Institute*
ANSI	*American National Standards Institute*
ASME	*American Society for Mechanical Engineers*
AWS	*American Welding Society*
EPRI	*Electric Power Research Institute*
IEEE	*Institute of Electrical and Electronics Engineers, Inc.*
NCIG	*Nuclear Construction Issues Group*
SMACNA	*Sheet Metal and Air Conditioning Contractors' National Association*

Note:

(1) To comply with NUREG-1503, Appendix G, NRC Position on the use of ANSI/AISC N690 (1984), for impact and impulsive loads, the ductility factors μ in Table Q1.5.8.1 are replaced with the ductility factors in Appendix A to SRP Subsection 3.5.3.]*

Text sections that are bracketed and italicized with an asterisk following the brackets are designated as Tier 2. Prior NRC approval is required to change.

[*Table 3.8-7*

Load Combination, Load Factors and Acceptance Criteria for Steel Structures Inside the Containment[(1),(2)]

Category	No.	Load Combination														Acceptance Criteria[(5)]
		D	L	P_o	P_a	T_o	T_a	E'	W	W'	R_o	R_a	Y[(4)]	SRV[(6),(7]	LOCA[(6),(7)]	
Normal	1	1.0	1.0	1.0												S
	2	1.0	1.0	1.0		1.0					1.0					S[(a)]
Severe Environmental	3	1.0	1.0	1.0					1.0					1.0		S
	4	1.0	1.0	1.0				1.0						1.0		S
	5	1.0	1.0	1.0		1.0			1.0		1.0			1.0		S[(a)]
	6	1.0	1.0	1.0		1.0		1.0			1.0			1.0		S[(a)]
Extreme Environmental	7	1.0	1.0	1.0		1.0				1.0	1.0			1.0		1.6S[(b)(c)]
	8	1.0	1.0	1.0		1.0		1.0			1.0			1.0		1.6S[(b)(c)]
Abnormal	9	1.0	1.0		1.0		1.0					1.0		1.0	Note[(3)]	1.6S[(b)(c)]
	9a	1.0	1.0		1.0		1.0							1.0	Note[(3)]	1.6S[(b)(c)]
Abnormal/Severe Environmental	10	1.0	1.0		1.0		1.0					1.0	1.0	1.0	Note[(3)]	1.6S[(b)(c)]
Abnormal/Extreme Environmental	11	1.0	1.0		1.0		1.0	1.0				1.0	1.0	1.0	Note[(3)]	1.7S[(b)(c)]

(1) *The loads are described in Subsection 3.8.3.3 and acceptance criteria in Subsection 3.8.3.5.*

(2) *For any load combination, where any load reduces the effects of other loads, the corresponding coefficient for that load is taken as 0.9 if it can be demonstrated that the load is always present or occur simultaneously with the other loads. Otherwise, the coefficient for that load is taken as zero.*

(3) *LOCA loads, such us CO, CHUG and PS are time-dependant loads. The sequence of occurrence is given in Appendix 3B. The load factor for LOCA loads is the same as the corresponding Pressure Load P_a. The maximum values of P_a, T_a, R_a, Y including an appropriate DLF are used, unless an appropriate time history analysis is performed to justify otherwise. LOCA includes Annulus Pressurization loads and effects. LOCA loads include hydrostatic pressure (with a load factor of 1.0) due to containment flooding.*

(4) *Y includes Y_j, Y_m and Y_r.*

(5) *Allowable elastic working stress (S) is the allowable stress limit specified in Part 1 of ANSI/AISC N-690-1994-s2 (2004).*
   - (a) *For primary plus secondary stress, the allowable limits are increased by a factor of 1.5.*
   - (b) *Stress limit coefficient in shear does not exceed 1.4 in members and bolts.*
   - (c) *The Stress limit coefficient where axial compression exceeds 20% of normal allowable, is 1.5 for load combinations 7, 8, 9, 9a and 10, and be 1.6 for load combination 11.*

(6) *Other loads such as jet loads and drag loads associated with SRV and LOCA hydrodynamic loads are applicable to submerged structures and those above suppression pool water surface. Methodology for calculation of these loads is given in the ESBWR Containment Load Definition (NEDE-33261P).*

(7) *The peak responses of dynamic loads do not occur at the same instant. SRSS method to combine peak dynamic responses is acceptable for steel structures.*]*

Text sections that are bracketed and italicized with an asterisk following the brackets are designated as Tier 2. Prior NRC approval is required to change.

[*Table 3.8-8*

Key Dimensions of RB, CB, FB, RW and FWSC

Building	*Dimension*		*Notes*
Reactor Building	*Story*	*Six stories (above grade)* *Three stories (below grade)*	
	Plan	*49.0 m × 49.0 m* *(below EL 34.0 m)* *49.0 m x 39.0 m* *(above EL 34.0 m)*	
	Height	*64.2 m*	*From the top of the foundation mat* †
Control Building	*Story*	*Two stories (above grade)* *Two stories (below grade)*	
	Plan	*30.3 m × 23.8 m*	
	Height	*21.20 m*	*From the top of the foundation mat* †
Fuel Building	*Story*	*One story (above grade)* *Three stories (below grade)*	*Excluding the penthouse*
	Plan	*21.0 m × 49.0 m*	
	Height	*34.0 m*	*From the top of the foundation mat* † *(excluding the penthouse)*
Radwaste Building	*Story*	*Two stories (above grade)* *Two stories (below grade)*	
	Plan	*66.0 m x 33.8 m*	
	Height	*26.0 m*	*From the top of the foundation mat* *(excluding the penthouse)*
Firewater Service Complex	*Story*	*One story (above grade)*	
	Plan	*52.0 m x 20.0 m*	
	Height	*15.1 m (FWS)* *3.6 m (FPE)*	*From the top of the foundation mat* †

† *For relative location of Grade to top of mat see Table 3.8-13.*]*

Text sections that are bracketed and italicized with an asterisk following the brackets are designated as Tier 2. Prior NRC approval is required to change.

SI to U.S. Customary units conversion (SI units are the controlling units and U.S. Customary units are for reference only):

1 m = 3.28 ft

[*Table 3.8-9*

Codes, Standards, Specifications, and Regulatory Guides Used in the Design and Construction of Seismic Category I Structures

Specification Reference Number	*Specification or Standard Designation*	*Title*
1	*ACI 349-01/349R-01*	*Code Requirements for Nuclear Safety-Related Concrete Structures and Commentary*
2	*ANSI/AISC N690-1994 (R2004) & S2*	*Specification for the Design, Fabrication and Erection of Steel Safety-Related Structures for Nuclear Facilities and Supplement No. 2*[(1)]
3	*ASME-2004*	*Boiler and Pressure Vessel Code Section III, Division 2, Subsection CC*
4	*ASME-2004*	*Boiler and Pressure Vessel Code Section III, Subsection NE, Division 1, Class MC*
5	*ANSI/ASME NQA-1-1983*	*Quality Assurance Program Requirements for Nuclear Facilities, 1983 Edition with NQA-1a-1983 Addenda, (Reference Section 17.0)*
6	*AWS D1.1/D1.1M 2004*	*Structural Welding Code - Steel*
7	*AWS D1.4 -98*	*Structural Welding Code - Reinforcing Steel (AWS D1.1/D1.1M) Rev. 05*
8	*AWS D1.6-99*	*Structural Welding Code for Stainless Steel*
9	*ASCE 4-98*	*Seismic Analysis of Safety-Related Nuclear Structures*
10	*ASCE 7-02*	*Minimum Design Loads for Buildings and Other Structures*
11	*AISC 360-05*	*2005 AISC Specification for Structural Steel Building*
12	*SSPC-PA-1-00*	*Paint Application Specification No. 1, Shop, Field and Maintenance Painting of Steel*
13	*SSPC-PA-2-04*	*Paint Application Specification No. 2, Measurement of Dry Coating Thickness with Magnetic Gages*
14	*SSPC-SP-1-82*	*Surface Preparation Specification No. 1, Solvent Cleaning*
15	*SSPC-SP-5-00*	*Surface Preparation Specification No. 5, White Metal Blast Cleaning*
16	*SSPC-SP-6-00*	*Surface Preparation Specification No. 6, Commercial Blast Cleaning*
17	*SSPC-SP-10-00*	*Surface Preparation Specification No. 10, Near-White Blast Cleaning*
18	*ASME 2004*	*Boiler and Pressure Vessel Code Section II*
19	*Not Used*	
20	*Regulatory Guide 1.28*	*Quality Assurance Program Requirements (Design and Construction), Aug. 1985*
21	*Regulatory Guide 1.29*	*Seismic Design Classification, Sep. 1978*
22	*Regulatory Guide 1.31*	*Control of Ferrite Content in Stainless Steel Weld Metal, Apr. 1978*
23	*Regulatory Guide 1.44*	*Control of the Use of Sensitized Stainless Steel, May 1973*
24	*Regulatory Guide 1.54*	*Service Level I, II and III Protective Coatings Applied to Nuclear Power Plants, Rev. 1, July 2000*
25	*Regulatory Guide 1.60*	*Design Response Spectra for Seismic Design of Nuclear Power Plants, Dec. 1973*
26	*Regulatory Guide 1.61*	*Damping Values for Seismic Design of Nuclear Power Plants, Rev. 1*
27	*Regulatory Guide 1.69*	*Concrete Radiation-Shields for Nuclear Power Plants, Dec. 1973*
28	*Regulatory Guide 1.76*	*Design Basis Tornado for Nuclear Power Plants, Apr. 1974*
29	*Regulatory Guide 1.94*	*Quality Assurance Requirements for Installation, Inspection, and Testing of Structural Concrete and Structural Steel During the Construction Phase of Nuclear Power Plants,*

[*Table 3.8-9*

Codes, Standards, Specifications, and Regulatory Guides Used in the Design and Construction of Seismic Category I Structures

Specification Reference Number	*Specification or Standard Designation*	*Title*
		Rev. 1
30	*Regulatory Guide 1.136*	*Design Limits, Loading Combinations, Materials, Construction, and Testing of Concrete Containments, Rev. 3, March 2007.*
31	*Regulatory Guide 1.142*	*Safety-Related Concrete Structures for Nuclear Power Plants (Other than Reactor Vessels and Containments), Nov. 2001*
32	*Regulatory Guide 1.143*	*Design Guidance for Radioactive Waste Management Systems, Structures and Components installed in Light Water Cooled Nuclear Power Plants, Nov. 2001*[(2)]
33	*Regulatory Guide 1.199*	*Anchoring Components and Structural Supports in Concrete, November 2003.*
34	*(Applicable ASTM Specifications for Materials and Standards)*	
35	*(Deleted)*	
36	*ASME/ANSI AG-1-2003*	*Code on Nuclear Air and Gas Treatment*
37	*AISI CF02-1*	*AISI Specification for the Design of Cold-Formed Steel Structural Members, AISI 2001 Edition and 2004 Supplement*
38	*SMACNA 1481, Third Edition, 2005*	*HVAC Duct Construction Standards-Metal and Flexible*
39	*IEEE-344-1987*	*Recommended Practices for Seismic Qualification of Class IE Equipment for Nuclear Power Generating Stations*

Explanation of Abbreviation

ACI	*American Concrete Institute*	*AISC*	*American Institute of Steel Construction*
AISI	*American Iron and Steel Institute*	*ANSI*	*American National Standards Institute*
ASCE	*American Society of Civil Engineers*	*ASME*	*American Society for Mechanical Engineer*
AWS	*American Welding Society*	*IEEE*	*Institute of Electrical and Electronics Engineers, Inc.*
SMACNA	*Sheet Metal and Air Conditioning Contractors' National Association*		
SSPC	*Steel Structures Painting Council*		

See Subsections 3.8.1.2 and 3.8.3.2 for Applications.

Notes:

(1) *To comply with NUREG-1503, Appendix G, NRC Position on the use of ANSI/AISC N690 (1984), for impact and impulsive loads, the ductility factors μ in Table Q1.5.8.1 are replaced with the ductility factors in Appendix A to SRP Subsection 3.5.3.*

(2) *The seismic design of the Radwaste Building is full SSE instead of 1/2 SSE as shown in Table 2 of RG 1.143. The tornado wind loads follow Table 2.0-1 of the DCD Tier 2. Classification RW-IIa SSCs housed within the building are designed to 1/2 SSE.*]*

Text sections that are bracketed and italicized with an asterisk following the brackets are designated as Tier 2. Prior NRC approval is required to change.

[*Table 3.8-10*

Temperatures During Operating Conditions (RB)

Region	***Summer Operation***	***Winter Operation***
RB rooms outside containment	*40°C*	*10°C*
Main steam tunnel	*57°C*	*57°C*
IC/PCCS pools (including expansion pools) *Reactor Well* *Equipment Storage pool* *Fuel Buffer pool*	*43°C*	*43°C*
Exterior	*46.1°C* †	*-40.0°C*
Ground	*15.5°C*	*15.5°C*

† *steady state; 47.2°C allowed for short duration.*]*

Text sections that are bracketed and italicized with an asterisk following the brackets are designated as Tier 2. Prior NRC approval is required to change.

SI to U.S. Customary units conversion (SI units are the controlling units and U.S. Customary units are for reference only):

1°C = (°F - 32)/1.8

[*Table 3.8-11*

Temperatures During Operating Conditions (CB)

Region	***Summer Operation***	***Winter Operation***
Main control room *DCIS room*	*21°C*	*21°C*
HVAC room	*30°C*	*10°C*
Exterior	*46.1°C* †	*-40.0°C*
Ground	*15.5°C*	*15.5°C*

† *steady state; 47.2°C allowed for short duration.*]*

Text sections that are bracketed and italicized with an asterisk following the brackets are designated as Tier 2. Prior NRC approval is required to change.

SI to U.S. Customary units conversion (SI units are the controlling units and U.S. Customary units are for reference only):

1°C = (°F - 32)/1.8

[*Table 3.8-12*

Temperatures During Operating Conditions (FB)

Region	***Summer Operation***	***Winter Operation***
Room	*40°C*	*10°C*
Spent fuel pool	*48.9°C*	*48.9°C*
Exterior	*46.1°C* †	*-40.0°C*
Ground	*15.5°C*	*15.5°C*

† *steady state; 47.2°C allowed for short duration.*]*

Text sections that are bracketed and italicized with an asterisk following the brackets are designated as Tier 2. Prior NRC approval is required to change.

SI to U.S. Customary units conversion (SI units are the controlling units and U.S. Customary units are for reference only):

1°C = (°F - 32)/1.8

**[*Table 3.8-13*

Key Dimensions of Foundations

Building	***Dimension***	***Notes***
Reactor Building Fuel Building	*Plan 70.0 m × 49.0 m*	*A common foundation of RB and FB*
	Thickness = 4.0 m	*The thickness is increased to 5.1 m at the containment portion, and 5.5 m at the spent fuel pool portion.*
	Top of foundation = 16 m below grade	
Control Building	*Plan 30.3 m × 23.8 m*	
	Thickness = 3.0 m	
	Top of foundation = 11.9 m below grade	
Firewater Service Complex	*Plan 52 m x 20 m*	*A common foundation of FWS and FPE*
	Thickness = 2.5 m	
	Top of foundation = 0.15 m above grade	]*

Text sections that are bracketed and italicized with an asterisk following the brackets are designated as Tier 2. Prior NRC approval is required to change.

SI to U.S. Customary units conversion (SI units are the controlling units and U.S. Customary units are for reference only):

1 m = 3.28 ft

[*Table 3.8-14*

Load Combinations and Factor of Safety for Foundation Design

Load Combination		***Overturning***	***Sliding***	***Flotation***
1	*D + H + W*	*1.5*	*1.5*	--
2	*D + H + E'*	*1.1*	*1.1*	--
3	*D + H + W_t*	*1.1*	*1.1*	--
4	*D + F'*	--	--	*1.1*

Nomenclature:

D: Dead Load

H: Lateral Earth Pressure

W: Wind Load

E': Basic SSE Seismic Load

W_t: Tornado Wind

F': Buoyant force of the design basis flood]*

Text sections that are bracketed and italicized with an asterisk following the brackets are designated as Tier 2. Prior NRC approval is required to change.

[*Table 3.8-15*

Load Combinations, Load Factors and Acceptance Criteria for the Safety-Related Reinforced Concrete Structures[(1),(2),(3)]

Load Combination															*Acceptance Criteria*[(5)]
Category	*No.*	*D*	*F*	*L*[(6)]	*H*	P_a	T_o	T_a	*E'*	*W*	W_t	R_o	R_a	*Y*[(4)]	
Normal	*1*	*1.4*	*1.4*	*1.7*	*1.7*							*1.7*			*U*
	2	*1.05*	*1.05*	*1.3*	*1.3*		*1.3*					*1.3*			*U*
Severe	*3*	*1.4*	*1.4*	*1.7*	*1.7*					*1.7*		*1.7*			*U*
Environmental	*4*	*1.05*	*1.05*	*1.3*	*1.3*		*1.3*			*1.3*		*1.3*			*U*
	5	*1.2*	*1.2*							*1.7*					*U*
Extreme	*6*	*1.0*	*1.0*	*1.0*	*1.0*		*1.0*		*1.0*			*1.0*			*U*
Environmental	*7*	*1.0*	*1.0*	*1.0*	*1.0*		*1.0*				*1.0*	*1.0*			*U*
Abnormal	*8*	*1.0*	*1.0*	*1.0*	*1.0*	*1.5*		*1.0*					*1.0*		*U*
Abnormal/Extreme Environmental	*9*	*1.0*	*1.0*	*1.0*	*1.0*	*1.0*		*1.0*	*1.0*				*1.0*	*1.0*	*U*

(1) *The loads are described in Subsection 3.8.4.3 and acceptance criteria in Subsection 3.8.4.5. The effects of SRV and LOCA dynamic loads that originate inside the containment are considered as applicable.*

(2) *For any load combination, where any load reduces the effects of other loads, the corresponding coefficient for that load is taken as 0.9 if it can be demonstrated that the load is always present or occurs simultaneously with the other loads. Otherwise, the coefficient for that load is taken as zero.*

(3) *Because P_a and T_a are time-dependent loads, their effects are superimposed accordingly.*

(4) *Y includes Y_j, Y_m and Y_r. The maximum value of Y including an appropriate DLF is used, unless an appropriate time history analysis is performed to justify otherwise.*

(5) *U = Required section strength based on the strength design method per ACI 349-01.*

(6) *The normal winter precipitation roof load is considered as a normal live load for all load combinations. The extreme winter precipitation roof load is considered as an extreme live load for the extreme environmental and abnormal/extreme environmental load combinations without concurrent seismic or tornado loads.*]*

Text sections that are bracketed and italicized with an asterisk following the brackets are designated as Tier 2. Prior NRC approval is required to change.

[*Table 3.8-16*

Load Combinations, Load Factors and Acceptance Criteria for the Safety-Related Steel Structures[(1),(2),(3)]

Category	Load Combination												Acceptance Criteria[(5)]
	No.	$D^{(6)}$	$L^{(7)}$	P_a	T_o	T_a	E'	W	W_t	R_o	R_a	$Y^{(4)}$	
Normal	1	1.0	1.0										S
	2	1.0	1.0		1.0					1.0			S (a)
Severe Environmental	3	1.0	1.0					1.0					S
	4	1.0	1.0		1.0			1.0		1.0			S (a)
Extreme Environmental	5	1.0	1.0		1.0		1.0			1.0			1.6S (b)(c)
	6	1.0	1.0		1.0				1.0	1.0			1.6S (b)(c)
Abnormal	7	1.0	1.0	1.0		1.0					1.0		1.6S (b)(c)
Abnormal/Extreme Environmental	8	1.0	1.0	1.0		1.0	1.0				1.0	1.0	1.7S (b)(c)

(1) *The loads are described in Subsection 3.8.4.3 and acceptance criteria in Subsection 3.8.4.5. The effects of SRV and LOCA dynamic loads that originate inside the containment are considered as applicable.*

(2) *For any load combination, where any load reduces the effects of other loads, the corresponding coefficient for that load is taken as 0.9 if it can be demonstrated that the load is always present or occurs simultaneously with the other loads. Otherwise, the coefficient for that load is taken as zero.*

(3) *Because P_a and T_a are time-dependent loads, their effects are superimposed accordingly.*

(4) *Y includes Y_j, Y_m and Y_r. The maximum values of Y including an appropriate DLF are used, unless an appropriate time history analysis is performed to justify otherwise.*

(5) *Allowable elastic working stress (S) is the allowable stress limit specified in Part 1 of AISC N690-1994-s2 (2004).*

- (a) *For primary plus secondary stress, the allowable limits are increased by a factor of 1.5.*
- (b) *Stress limit coefficient in shear does not exceed 1.4 in members and bolts.*
- (c) *Stress limit coefficient, where axial compression exceeds 20% of nominal allowable, is 1.5 for load combinations 5, 6, and 7, and 1.6 for load combination 8.*

(6) *Dead Load includes settlements.*

(7) *The normal winter precipitation roof load is considered as a normal live load for all load combinations. The extreme winter precipitation roof load is considered as an extreme live load for the extreme environmental and abnormal/extreme environmental load combinations without concurrent seismic or tornado loads.*]*

Text sections that are bracketed and italicized with an asterisk following the brackets are designated as Tier 2. Prior NRC approval is required to change.

Table 3.8-17

PCCS Passages Through RCCV Top Slab

Passage Number	Description	RCCV Sector
0001	Condenser Steam Inlet Line A	I
0007	Condenser Condensate + Vent Line A1	I
0008	Condenser Condensate + Vent Line A2	I
0002	Condenser Steam Inlet Line B	I/III
0009	Condenser Condensate + Vent Line B1	I/III
0010	Condenser Condensate + Vent Line B2	I/III
0003	Condenser Steam Inlet Line C	III
0011	Condenser Condensate + Vent Line C1	III
0012	Condenser Condensate + Vent Line C2	III
0004	Condenser Steam Inlet Line D	II
0013	Condenser Condensate + Vent Line D1	II
0014	Condenser Condensate + Vent Line D2	II
0005	Condenser Steam Inlet Line E	II/IV
0015	Condenser Condensate + Vent Line E1	II/IV
0016	Condenser Condensate + Vent Line E2	II/IV
0006	Condenser Steam Inlet Line F	IV
0017	Condenser Condensate + Vent Line F1	IV
0018	Condenser Condensate + Vent Line F2	IV

Notes:

(1) All PCCS Passages are located in the RCCV Top Slab.

[*Table 3.8-18*

Temperatures During Operating Conditions (FWSC)

Region	***Summer Operation***	***Winter Operation***
Water & Air in FWS	*43.0°C*	*4.5°C*
FPE Interior	*26.7°C*	*4.5°C*
Exterior	*46.1°C*	*-40.0°C*
Ground	*15.5°C*	*15.5°C*]*

Text sections that are bracketed and italicized with an asterisk following the brackets are designated as Tier 2. Prior NRC approval is required to change.

SI to U.S. Customary units conversion (SI units are the controlling units and U.S. Customary units are for reference only):

1°C = (°F - 32)/1.8

[

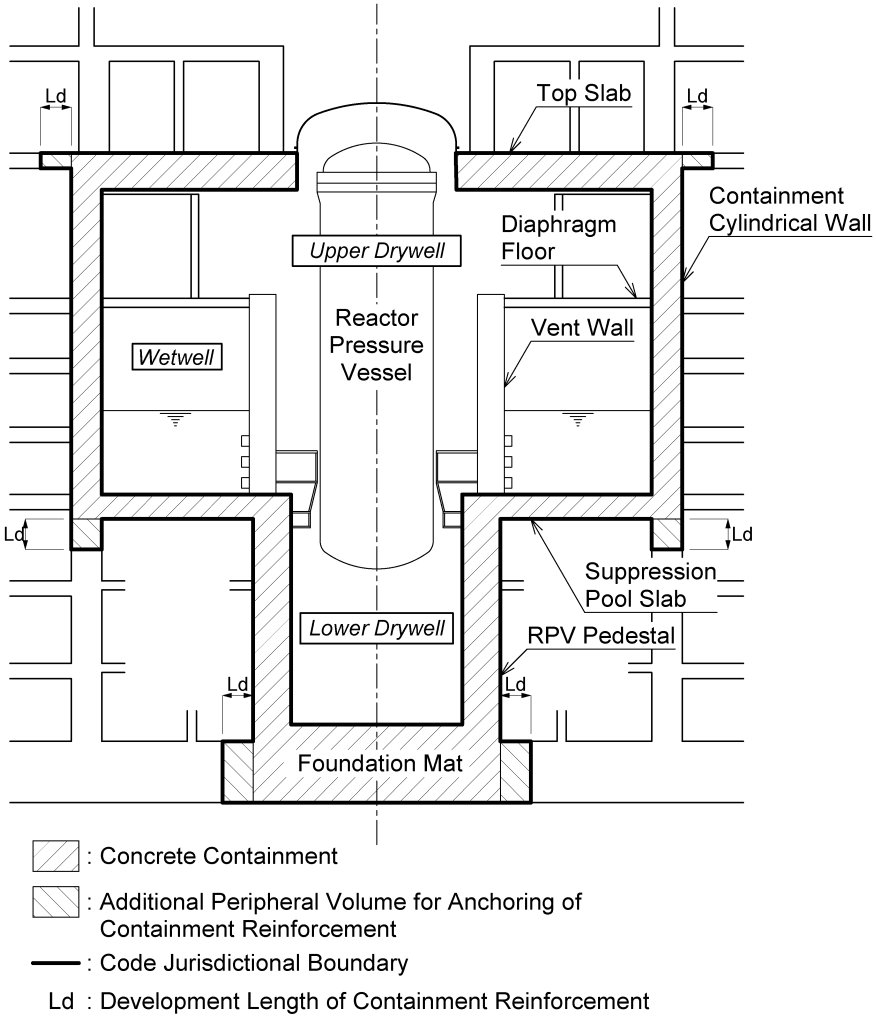

]*

Figure 3.8-1. Configuration of Concrete Containment

Figures that are bracketed with an asterisk following the brackets are designated as Tier 2. Prior NRC approval is required to change.

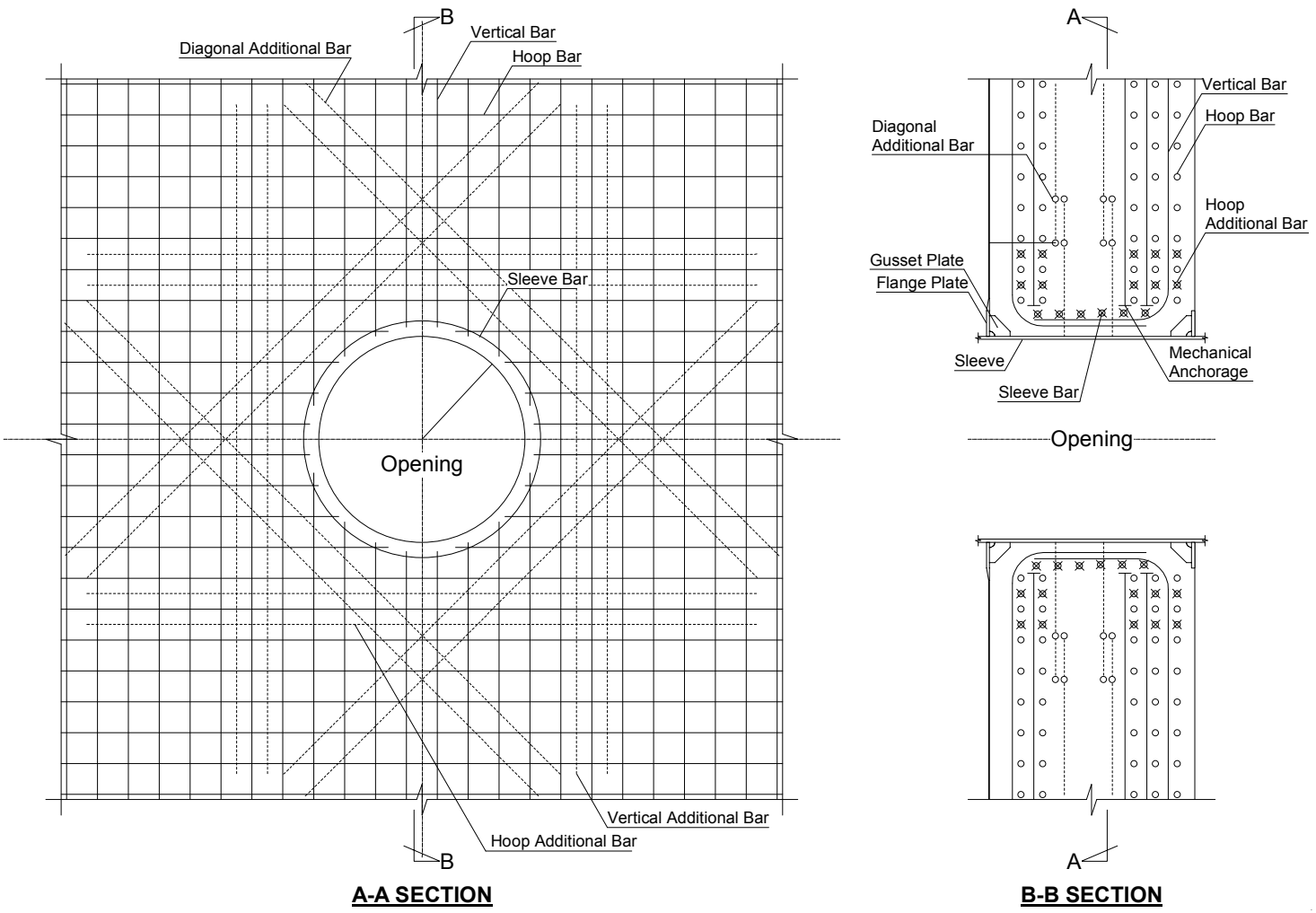

Figure 3.8-2. Schematic of Reinforcements in RCCV Wall Around Equipment Hatch/Personnel Airlock Opening

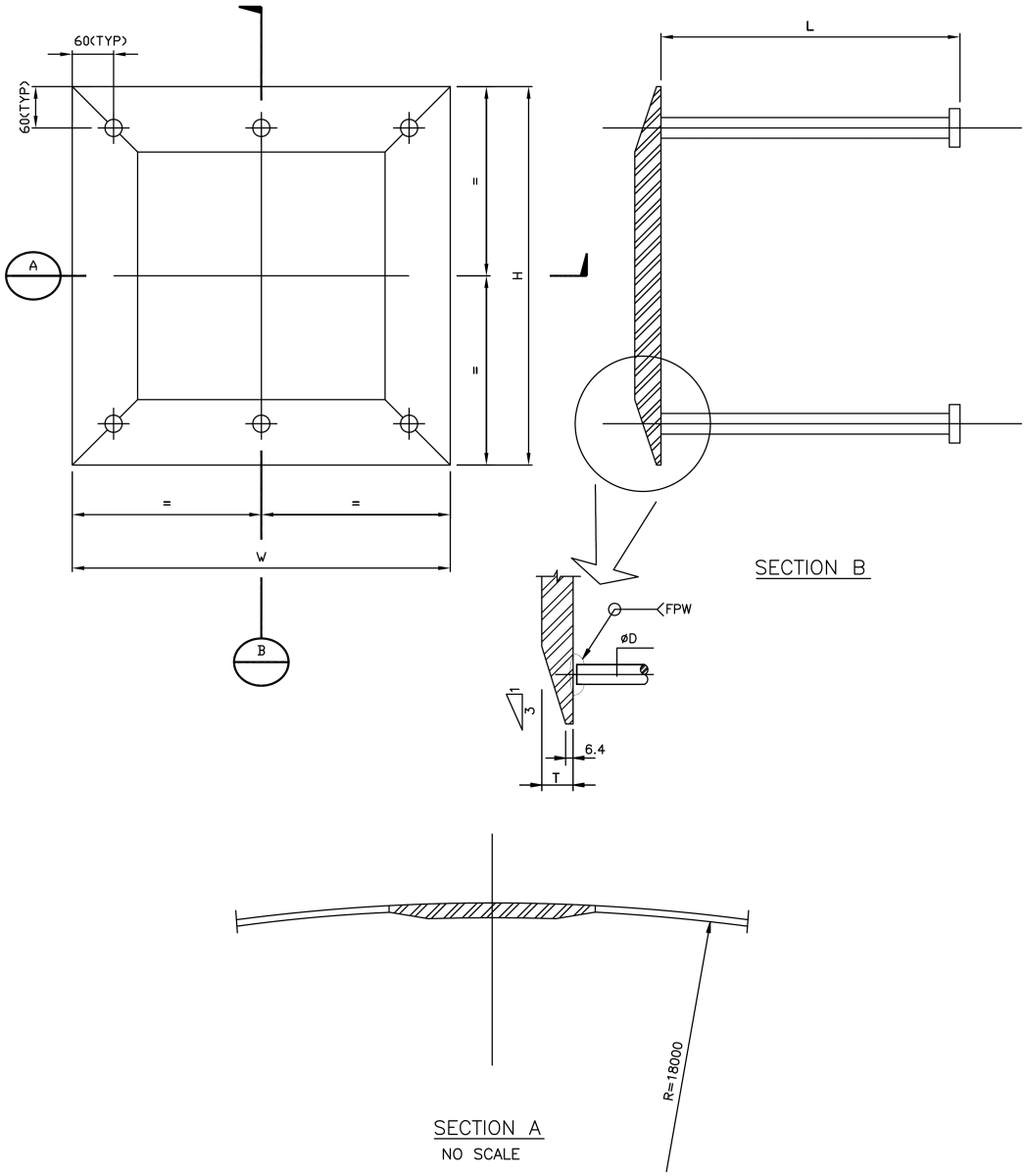

Figure 3.8-3. Typical Internal Containment Plate Support with Embedment Integral with Containment Liner

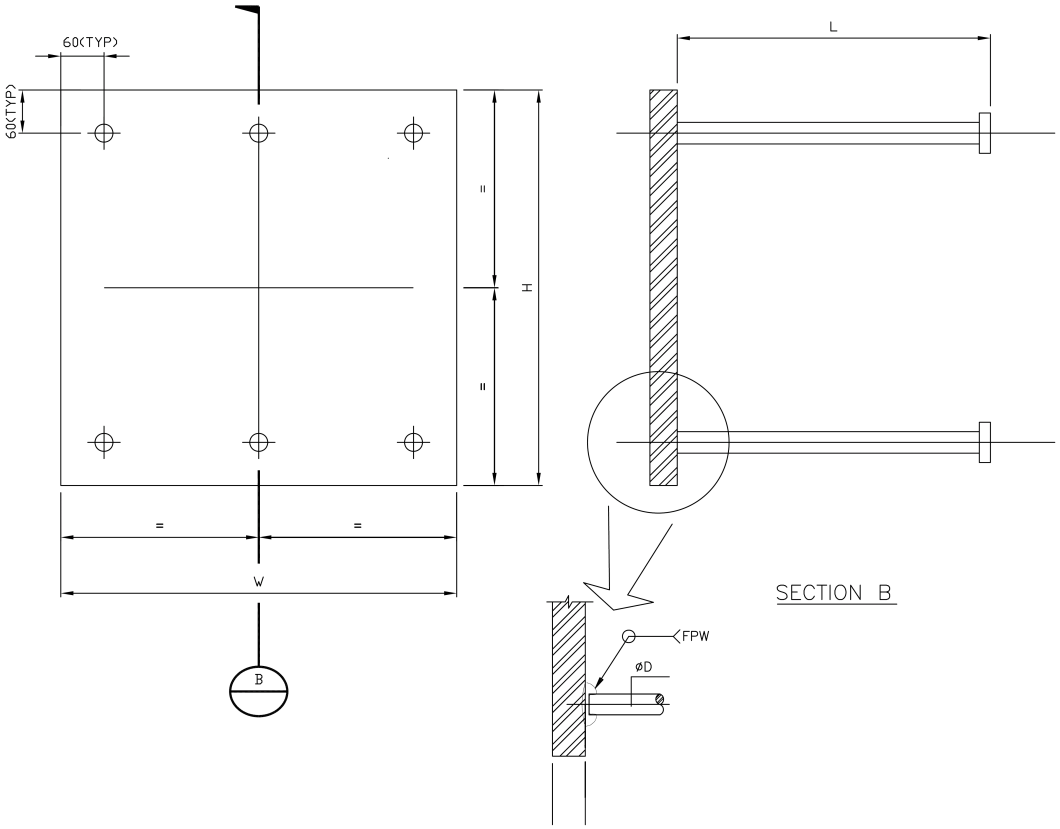

Figure 3.8-4. Typical External Containment Plate Support with Embedment

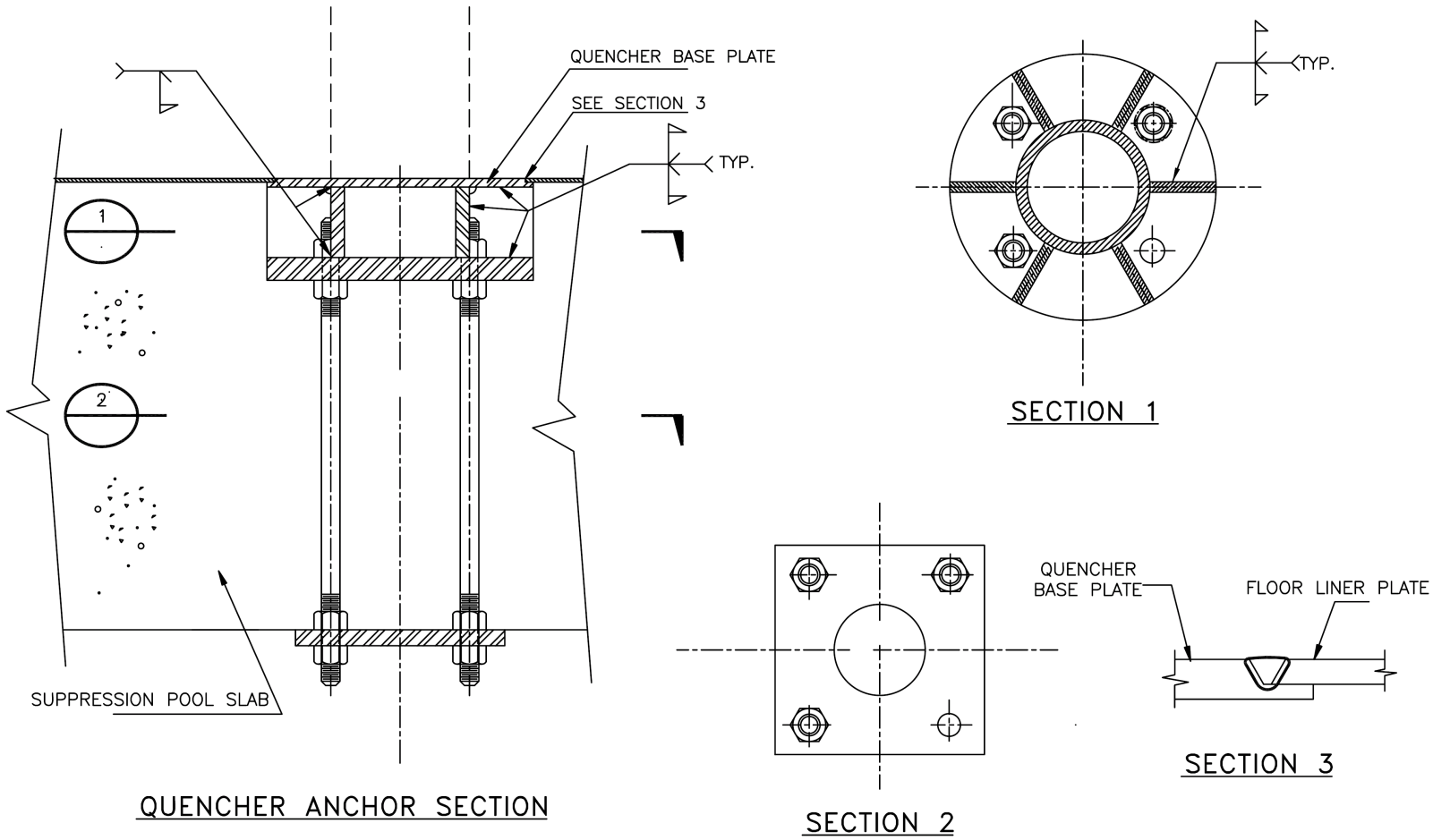

Figure 3.8-5. Quencher Anchorage

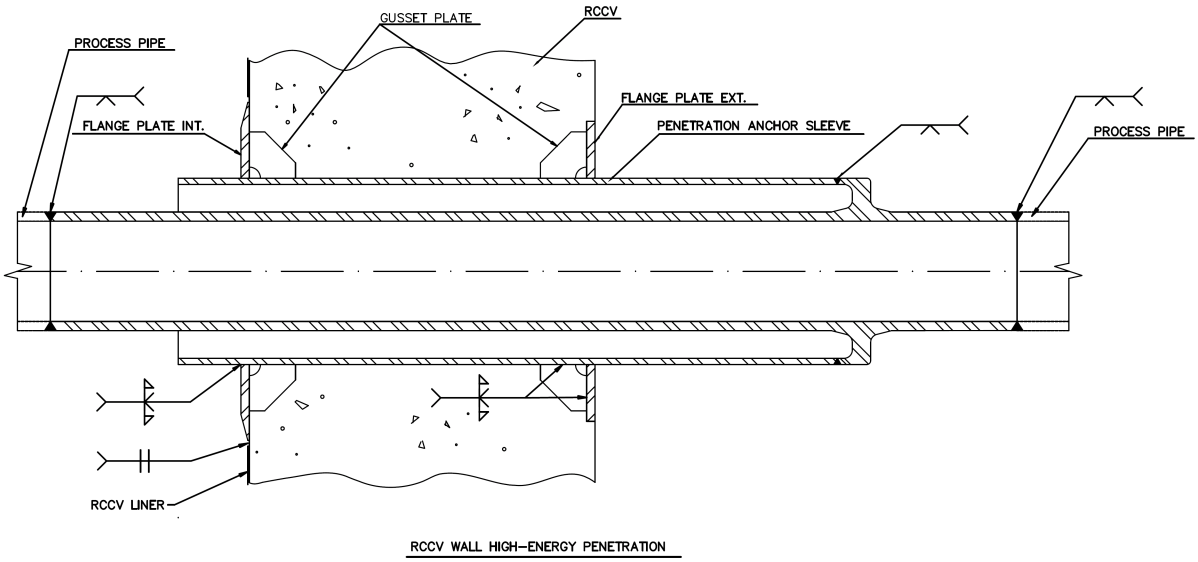

Figure 3.8-6. RCCV Wall High-Energy Penetration

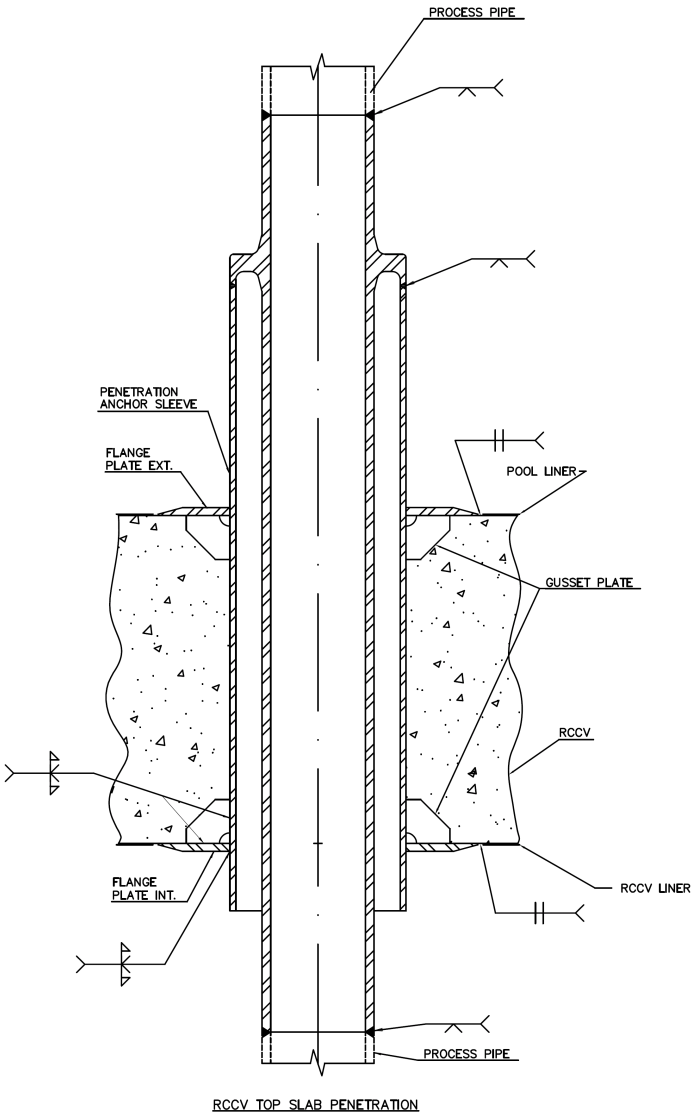

Figure 3.8-7. RCCV Top Slab Penetration and PCCS Passages

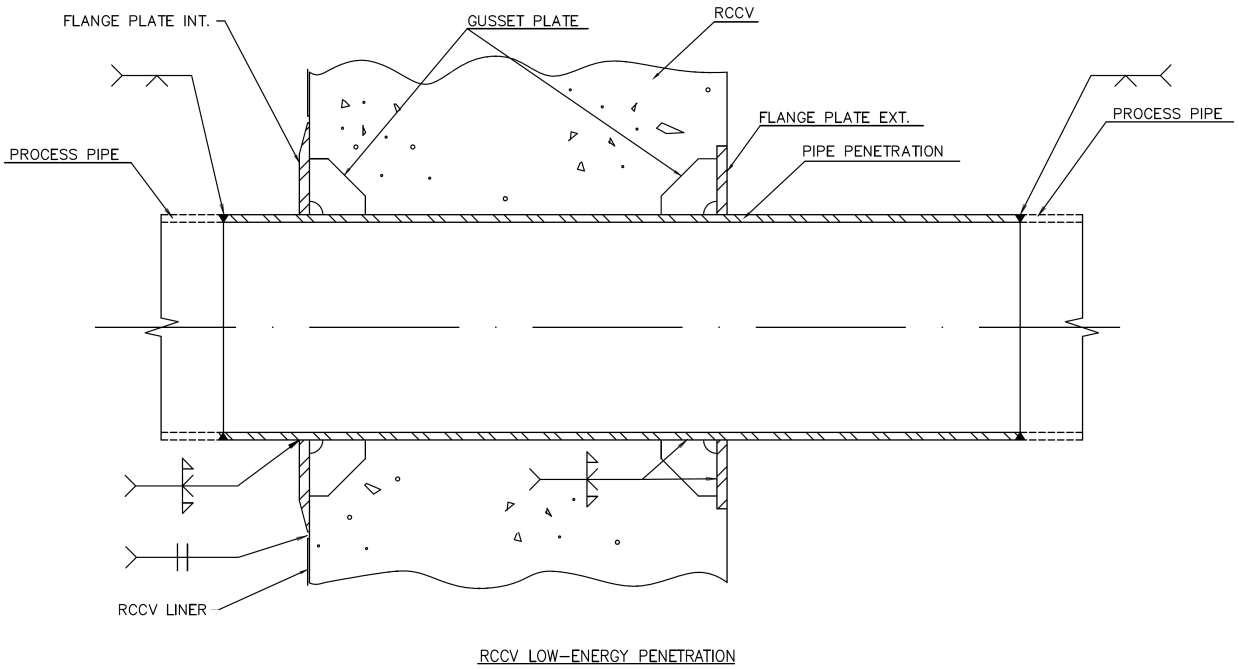

Figure 3.8-8. RCCV Low-Energy Penetration

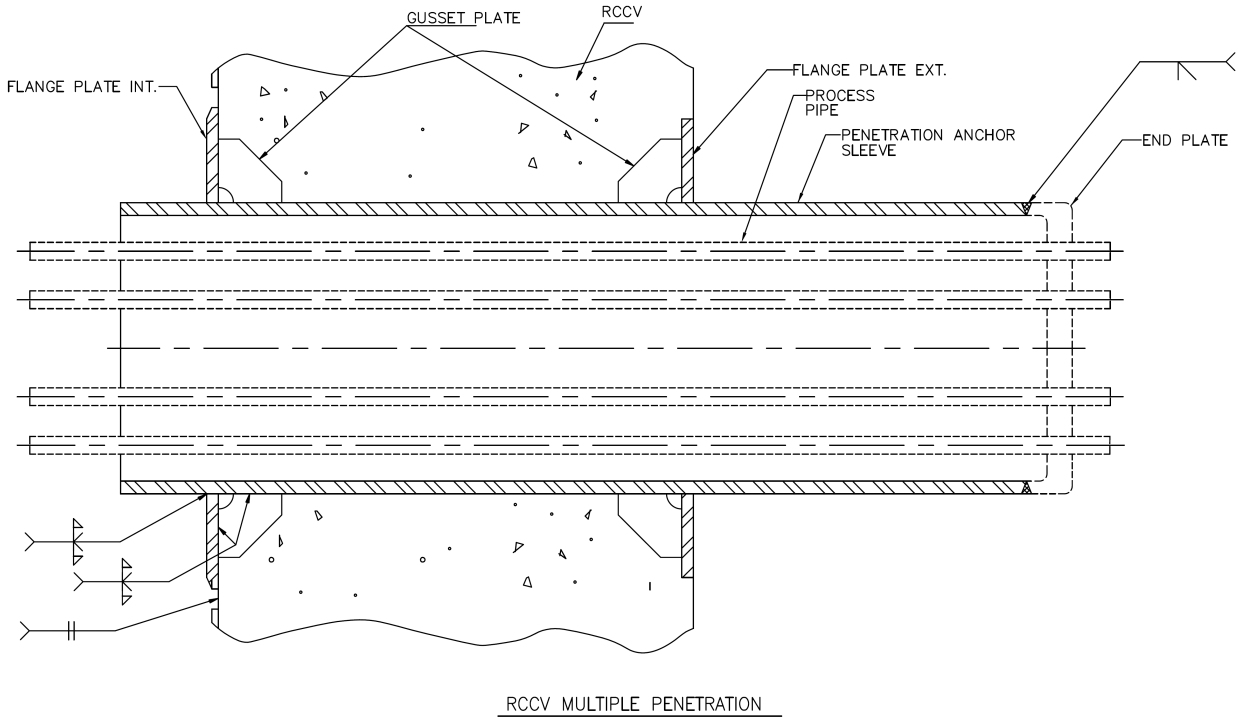

Figure 3.8-9. RCCV Multiple Penetration

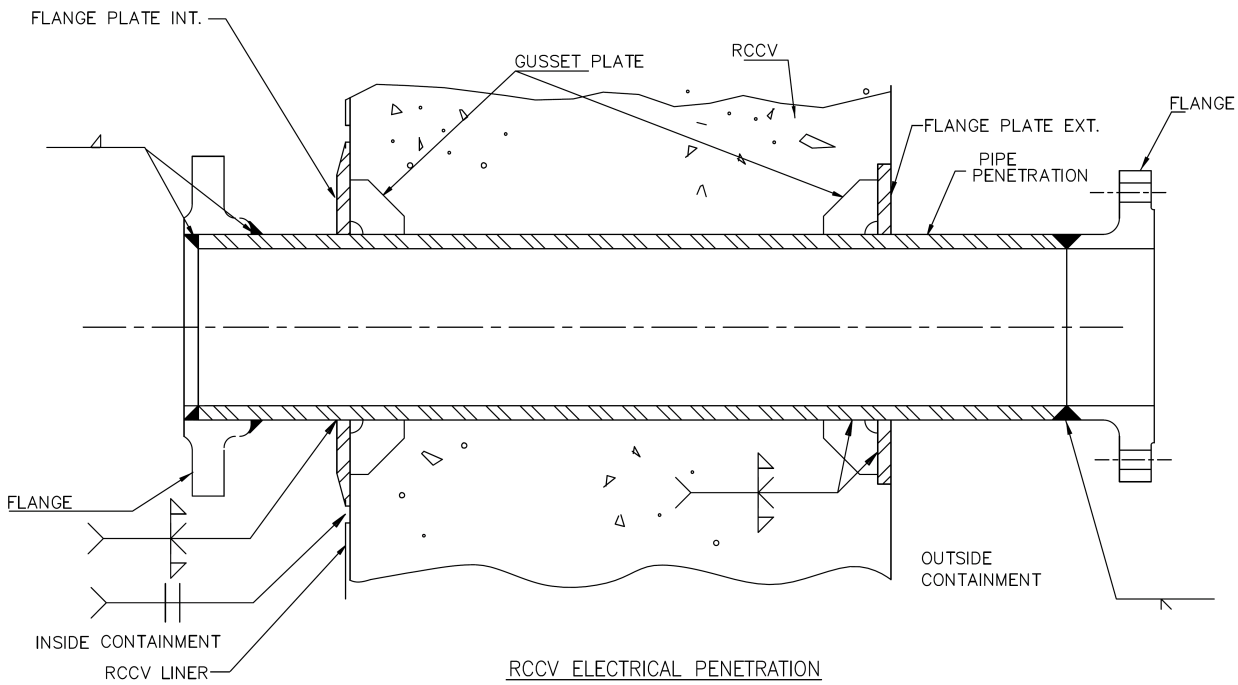

Figure 3.8-10. RCCV Electrical Penetration

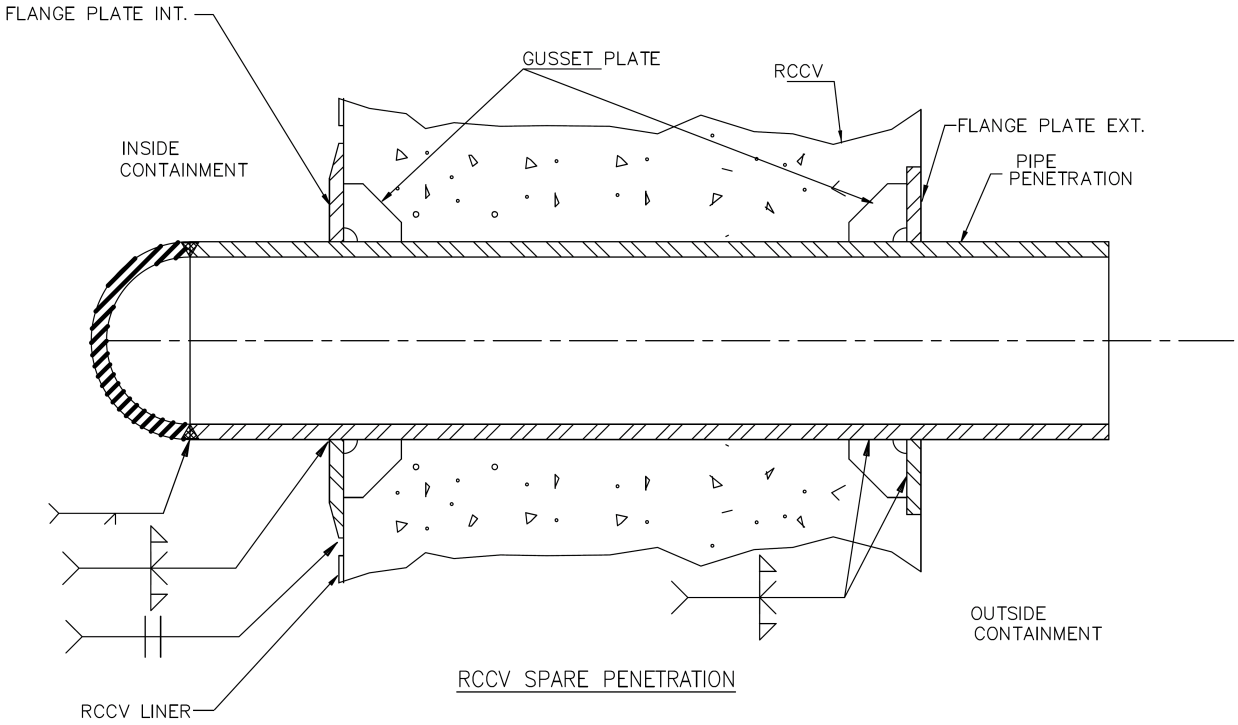

Figure 3.8-11. RCCV Spare Penetration

Figure 3.8-12. (Deleted)