GE Hitachi Nuclear Energy

26A6642AD
Revision 7
March 2010

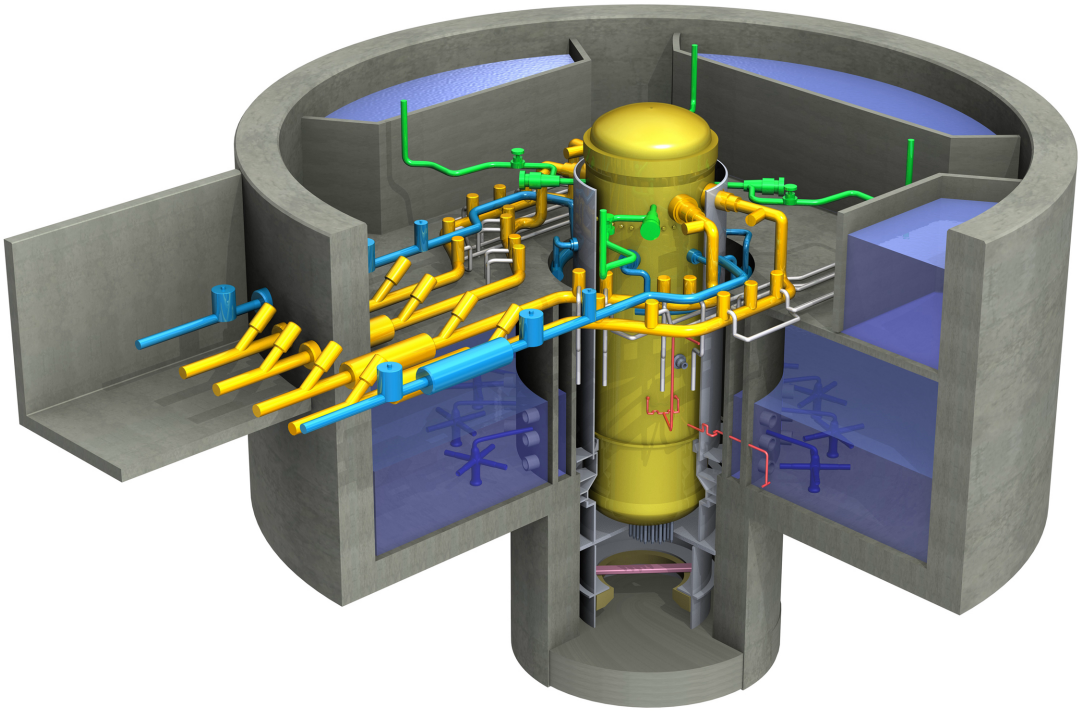

ESBWR Design Control Document
Tier 2

Chapter 1
Introduction and General Description of Plant
Sections 1.1 – 1.11

Contents

1. Introduction and General Description of Plant 1.1-1
1.1 Introduction 1.1-1
1.1.1 Format and Content 1.1-1
1.1.2 General Description 1.1-1
1.1.2.1 ESBWR Standard Plant Scope 1.1-1
1.1.2.1.1 Seismic Category I Standard Plant Structures 1.1-1
1.1.2.1.2 Seismic Category II and NS Standard Plant Structures 1.1-1
1.1.2.2 Type of License Request 1.1-2
1.1.2.3 Number of Plant Units 1.1-2
1.1.2.4 Description of Location 1.1-2
1.1.2.5 Type of Nuclear Steam Supply 1.1-2
1.1.2.6 Type of Containment 1.1-2
1.1.2.7 Rated Core Thermal Power 1.1-2
1.1.3 COL Information 1.1-3
1.1.4 References 1.1-3
1.2 General Plant Description 1.2-1
1.2.1 Principal Design Criteria 1.2-1
1.2.1.1 General Power Generation (Nonsafety) Design Criteria 1.2-1
1.2.1.2 General Safety Design Criteria 1.2-2
1.2.1.3 Nuclear System Criteria 1.2-4
1.2.1.4 Electrical Power Systems Criteria 1.2-5
1.2.1.5 Auxiliary Systems Criteria 1.2-5
1.2.1.6 Shielding and Access Control Criteria 1.2-5
1.2.1.7 Power Conversion Systems Criteria 1.2-5
1.2.1.8 Nuclear System Process Control Criteria 1.2-6
1.2.1.9 Electrical Power System Process Control Criteria 1.2-6
1.2.2 Plant Description 1.2-6
1.2.2.1 Nuclear Steam Supply 1.2-6
1.2.2.1.1 Reactor Pressure Vessel and Internals 1.2-6
1.2.2.1.2 Nuclear Boiler System 1.2-10
1.2.2.1.3 RPV Natural Circulation Process 1.2-15
1.2.2.2 Controls and Instrumentation 1.2-15
1.2.2.2.1 Rod Control and Information System 1.2-15
1.2.2.2.2 Control Rod Drive System 1.2-17
1.2.2.2.3 Feedwater Control System 1.2-19
1.2.2.2.4 Standby Liquid Control System 1.2-21
1.2.2.2.5 Neutron Monitoring System 1.2-21
1.2.2.2.6 Remote Shutdown System 1.2-23
1.2.2.2.7 Reactor Protection System 1.2-23
1.2.2.2.8 Plant Automation System 1.2-24
1.2.2.2.9 Steam Bypass and Pressure Control System 1.2-25
1.2.2.2.10 Distributed Control and Information System 1.2-26
1.2.2.2.11 Leak Detection and Isolation System 1.2-26

1.2.2.2.12 Safety System Logic and Control System 1.2-28
1.2.2.2.13 Diverse Instrumentation and Controls 1.2-28
1.2.2.3 Radiation Monitoring Systems 1.2-30
1.2.2.3.1 Process Radiation Monitoring System 1.2-30
1.2.2.3.2 Area Radiation Monitoring System 1.2-33
1.2.2.4 Core Cooling Systems Used For Abnormal Events 1.2-33
1.2.2.4.1 Isolation Condenser System 1.2-33
1.2.2.4.2 Emergency Core Cooling System — Gravity-Driven Cooling System... 1.2-35
1.2.2.5 Reactor Servicing Equipment 1.2-37
1.2.2.5.1 Fuel Service Equipment 1.2-37
1.2.2.5.2 Miscellaneous Service Equipment 1.2-37
1.2.2.5.3 Reactor Pressure Vessel Servicing Equipment 1.2-38
1.2.2.5.4 RPV Internals Servicing Equipment 1.2-38
1.2.2.5.5 Refueling Equipment 1.2-38
1.2.2.5.6 Fuel Storage Facility 1.2-39
1.2.2.5.7 Under-Vessel Servicing Equipment 1.2-39
1.2.2.5.8 FMCRD Maintenance Area 1.2-40
1.2.2.5.9 Fuel Cask Cleaning 1.2-40
1.2.2.5.10 Fuel Transfer System 1.2-41
1.2.2.5.11 [Deleted] 1.2-42
1.2.2.6 Reactor Auxiliary Systems 1.2-42
1.2.2.6.1 Reactor Water Cleanup/Shutdown Cooling System 1.2-42
1.2.2.6.2 Fuel and Auxiliary Pools Cooling System 1.2-43
1.2.2.7 Control Panels 1.2-45
1.2.2.7.1 Main Control Room Panels 1.2-45
1.2.2.7.2 Radwaste Control Room Panels 1.2-45
1.2.2.7.3 Local Control Panels and Racks 1.2-45
1.2.2.8 Nuclear Fuel 1.2-45
1.2.2.8.1 Fuel Rods and Bundles 1.2-45
1.2.2.8.2 Fuel Channel 1.2-46
1.2.2.9 Control Rods 1.2-46
1.2.2.10 Radioactive Waste Management System 1.2-47
1.2.2.10.1 Liquid Waste Management System 1.2-47
1.2.2.10.2 Solid Waste Management System 1.2-47
1.2.2.10.3 Gaseous Waste Management System 1.2-48
1.2.2.11 Power Cycle 1.2-49
1.2.2.11.1 Turbine Main Steam System 1.2-49
1.2.2.11.2 Condensate and Feedwater System 1.2-50
1.2.2.11.3 Condensate Purification System 1.2-51
1.2.2.11.4 Main Turbine 1.2-51
1.2.2.11.5 Turbine Gland Seal System 1.2-51
1.2.2.11.6 Turbine Bypass System 1.2-52
1.2.2.11.7 Main Condenser 1.2-53
1.2.2.11.8 Circulating Water System 1.2-54
1.2.2.12 Station Auxiliaries 1.2-54
1.2.2.12.1 Makeup Water System 1.2-54

1.2.2.12.2 Condensate Storage and Transfer System 1.2-55
1.2.2.12.3 Reactor Component Cooling Water System 1.2-55
1.2.2.12.4 Turbine Component Cooling Water System 1.2-55
1.2.2.12.5 Chilled Water System 1.2-56
1.2.2.12.6 Oxygen Injection System 1.2-56
1.2.2.12.7 Plant Service Water System 1.2-56
1.2.2.12.8 Service Air System 1.2-57
1.2.2.12.9 Instrument Air System 1.2-57
1.2.2.12.10 High Pressure Nitrogen Supply System 1.2-57
1.2.2.12.11 Auxiliary Boiler System 1.2-58
1.2.2.12.12 [Deleted] 1.2-58
1.2.2.12.13 Hydrogen Water Chemistry System 1.2-58
1.2.2.12.14 Process Sampling System 1.2-58
1.2.2.12.15 Zinc Injection System 1.2-59
1.2.2.12.16 Freeze Protection 1.2-59
1.2.2.13 Station Electrical System 1.2-59
1.2.2.13.1 Electrical Power Distribution System 1.2-59
1.2.2.13.2 Electrical Penetrations 1.2-59
1.2.2.13.3 Direct Current Power Supply 1.2-60
1.2.2.13.4 Standby On-Site AC Power Supply 1.2-60
1.2.2.13.5 Uninterruptible AC Power Supply 1.2-61
1.2.2.13.6 [Deleted] 1.2-61
1.2.2.13.7 Communications System 1.2-61
1.2.2.13.8 Lighting Power Supply 1.2-61
1.2.2.14 Power Transmission 1.2-62
1.2.2.15 Containment and Environmental Control Systems 1.2-62
1.2.2.15.1 Containment System 1.2-62
1.2.2.15.2 Containment Vessel 1.2-64
1.2.2.15.3 Containment Internal Structures 1.2-64
1.2.2.15.4 Passive Containment Cooling System 1.2-65
1.2.2.15.5 Containment Inerting System 1.2-65
1.2.2.15.6 Drywell Cooling System 1.2-67
1.2.2.15.7 Containment Monitoring System 1.2-68
1.2.2.16 Structures and Servicing Systems 1.2-70
1.2.2.16.1 Cranes, Hoists, and Elevators 1.2-70
1.2.2.16.2 Heating Ventilating and Air Conditioning 1.2-70
1.2.2.16.3 Fire Protection System 1.2-71
1.2.2.16.4 Equipment and Floor Drainage System 1.2-71
1.2.2.16.5 Reactor Building 1.2-72
1.2.2.16.6 Control Building 1.2-72
1.2.2.16.7 Fuel Building 1.2-72
1.2.2.16.8 Turbine Building 1.2-72
1.2.2.16.9 Radwaste Building 1.2-72
1.2.2.16.10 Other Building Structures 1.2-73
1.2.2.17 Intake Structure and Servicing Equipment 1.2-73
1.2.2.17.1 Intake and Discharge Structures 1.2-73

1.2.2.18 Yard Structures and Equipment 1.2-73
1.2.2.18.1 Oil Storage and Transfer System 1.2-73
1.2.2.18.2 Site Security 1.2-73
1.2.3 COL Information 1.2-74
1.2.4 References 1.2-74
1.3 Comparison Tables 1.3-1
1.3.1 COL Information 1.3-1
1.4 Identification of Agents and Contractors 1.4-1
1.4.1 Technical Qualifications of Applicant 1.4-1
1.4.2 Use of Contractors 1.4-1
1.5 Requirements for Further Technical Information 1.5-1
1.5.1 Evolutionary Design 1.5-1
1.5.2 Analysis and Design Tools 1.5-1
1.5.2.1 TRACG 1.5-2
1.5.2.2 Scope of Application of TRACG to ESBWR 1.5-3
1.5.3 Testing 1.5-4
1.5.3.1 Major ESBWR Unique Test Programs 1.5-6
1.5.4 References 1.5-8
1.6 Material Incorporated by Reference 1.6-1
1.7 Drawings and Other Detailed Information 1.7-1
1.7.1 Electrical, Instrumentation and Control Drawings 1.7-1
1.7.2 Piping and Instrumentation Diagrams 1.7-1
1.7.3 Other Detailed Information 1.7-1
1.7.4 COL Information 1.7-2
1.8 Interfaces With Standard Design 1.8-1
1.8.1 Identification of Nuclear Steam Supply System Safety-Related Interfaces 1.8-1
1.8.2 Identification of Balance of Plant Interfaces 1.8-1
1.8.2.1 Circulating Water System 1.8-1
1.8.2.2 Plant Service Water System 1.8-1
1.8.2.3 Off-site Electrical Power 1.8-1
1.8.2.4 Makeup Water System 1.8-1
1.8.2.5 Potable and Sanitary Water 1.8-2
1.8.2.6 Communications Systems 1.8-2
1.8.2.7 Station Water System 1.8-2
1.8.2.8 Independent Spent Fuel Storage Installation 1.8-2
1.9 Conformance with Standard Review Plan and Applicability of Codes and Standards 1.9-1
1.9.1 Conformance with Standard Review Plan 1.9-1
1.9.2 Applicability to Regulatory Criteria 1.9-1
1.9.3 Applicability of Experience Information 1.9-1
1.9.4 COL Information 1.9-1
1.9.5 References 1.9-1
1.10 Summary of COL Items 1.10-1

1.11 Technical Resolutions of Task Action Plan Items, New Generic Issues, New Generic Safety Issues and Chernobyl Issues 1.11-1
1.11.1 Approach 1.11-1
1.11.2 COL Information 1.11-1
1.11.3 References 1.11-1

List of Tables

Table 1.3-1 Comparison of Reactor System Design Characteristics 1.3-2
Table 1.3-2 Comparison of Emergency Core Cooling Systems and Safety-Related Containment Cooling Systems 1.3-9
Table 1.3-3 Comparison of Containment Design Characteristics 1.3-11
Table 1.3-4 Comparison of Structural Design Characteristics 1.3-13
Table 1.4-1 Commercial Nuclear Reactors Completed and Under Construction By GE/GEH 1.4-1
Table 1.5-1 Evolution of the GE/GEH BWR 1.5-10
Table 1.5-2 ESBWR Features and Related Experience 1.5-11
Table 1.6-1 Referenced GE / GEH Reports 1.6-2
Table 1.6-2 Referenced non-GE / GEH Topical Reports 1.6-18
Table 1.7-1 Piping Designations and Specifications for DCD Drawings 1.7-3
Table 1.7-2 Summary of Electrical/I&C System Configuration Drawings 1.7-7
Table 1.7-3 Summary of Mechanical System Configuration Drawings 1.7-9
Table 1.8-1 Matrix of NSSS Interfaces 1.8-3
Table 1.8-2 Matrix of BOP Interfaces 1.8-5
Table 1.9-1 Summary of Differences from SRP Section 1 ..... 1.9-3
Table 1.9-2 Summary of Differences from SRP Section 2 ..... 1.9-4
Table 1.9-3 Summary of Differences from SRP Section 3 ..... 1.9-5
Table 1.9-4 Summary of Differences from SRP Section 4 ..... 1.9-7
Table 1.9-5 Summary of Differences from SRP Section 5 ..... 1.9-8
Table 1.9-6 Summary of Differences from SRP Section 6 ..... 1.9-10
Table 1.9-7 Summary of Differences from SRP Section 7 ..... 1.9-13
Table 1.9-8 Summary of Differences from SRP Section 8 ..... 1.9-15
Table 1.9-9 Summary of Differences from SRP Section 9 ..... 1.9-19
Table 1.9-10 Summary of Differences from SRP Section 10 ..... 1.9-27
Table 1.9-11 Summary of Differences from SRP Section 11 ..... 1.9-32
Table 1.9-12 Summary of Differences from SRP Section 12 ..... 1.9-33
Table 1.9-13 Summary of Differences from SRP Section 13 ..... 1.9-34
Table 1.9-14 Summary of Differences from SRP Section 14 ..... 1.9-35
Table 1.9-15 Summary of Differences from SRP Section 15 ..... 1.9-36
Table 1.9-16 Summary of Differences from SRP Section 16 ..... 1.9-39
Table 1.9-17 Summary of Differences from SRP Section 17 ..... 1.9-40
Table 1.9-18 Summary of Differences from SRP Section 18 ..... 1.9-41
Table 1.9-19 Summary of Differences from SRP Section 19 ..... 1.9-42
Table 1.9-20 NRC Standard Review Plans and Branch Technical Positions Applicability to ESBWR 1.9-43
Table 1.9-21 NRC Regulatory Guides Applicability to ESBWR 1.9-69
Table 1.9-21a EPRI Intent and Optimization Topics 1.9-95
Table 1.9-21b ESBWR Compliance with Quality Related Regulatory Guides 1.9-98
Table 1.9-22 Industrial Codes and Standards Applicable to ESBWR 1.9-100
Table 1.9-23 NUREGs Referenced in ESBWR DCD 1.9-131
Table 1.10-1 Summary of COL Items 1.10-2

Table 1.11-1 Resolutions To NUREG-0933 Table II Task Action Plan Items, New Generic Issues, Human Factors Issues and Chernobyl Issues 1.11-2

List of Illustrations

Figure 1.1-1. ESBWR Standard Plant General Site Plan 1.1-4
Figure 1.1-2. Safety System Configuration (not to scale) 1.1-5
Figure 1.1-3a. Reactor System Heat Balance at 100% Power (SI Units) 1.1-6
Figure 1.1-3b. Reactor System Heat Balance at 100% Power (English Units) 1.1-7
Figure 1.2-1. Nuclear Island Plan at Elevation –11500 ..... 1.2-75
Figure 1.2-2. Nuclear Island Plan at Elevation –6400 ..... 1.2-76
Figure 1.2-3. Nuclear Island Plan at Elevation –1000 ..... 1.2-77
Figure 1.2-4. Nuclear Island Plan at Elevation 4650 ..... 1.2-78
Figure 1.2-5. Nuclear Island Plan at Elevation 9060 ..... 1.2-79
Figure 1.2-6. Nuclear Island Plan at Elevation 13570 ..... 1.2-80
Figure 1.2-7. Nuclear Island Plan at Elevation 17500 ..... 1.2-81
Figure 1.2-8. Nuclear Island Plan at Elevation 27000 ..... 1.2-82
Figure 1.2-9. Nuclear Island Plan at Elevation 34000 ..... 1.2-83
Figure 1.2-10. Nuclear Island Elevation Section A-A 1.2-84
Figure 1.2-11. Nuclear Island Elevation Section B-B 1.2-85
Figure 1.2-12. Turbine Building Plan at Elevation –1400 ..... 1.2-86
Figure 1.2-13. Turbine Building Plan at Elevation 4650 ..... 1.2-87
Figure 1.2-14. Turbine Building Plan at Elevation 12000 ..... 1.2-88
Figure 1.2-15. Turbine Building Plan at Elevation 20000 ..... 1.2-89
Figure 1.2-16. Turbine Building Plan at Elevation 28000 ..... 1.2-90
Figure 1.2-17. Turbine Building Plan at Elevation 35000 ..... 1.2-91
Figure 1.2-18. Turbine Building Plan at Elevation Various 1.2-92
Figure 1.2-19. Turbine Building Elevation Section A-A 1.2-93
Figure 1.2-20. Turbine Building Elevation Section B-B 1.2-94
Figure 1.2-21. Radwaste Building Plan at Elevation -9350 ..... 1.2-95
Figure 1.2-22. Radwaste Building Plan at Elevation -2350 ..... 1.2-96
Figure 1.2-23. Radwaste Building Plan at Elevation 4650 ..... 1.2-97
Figure 1.2-24. Radwaste Building Plan at Elevation 10650 ..... 1.2-98
Figure 1.2-25. Radwaste Building Elevation Section A-A 1.2-99
Figure 1.2-26. Electrical Building Plan at Elevation 4650 ..... 1.2-100
Figure 1.2-27. Electrical Building Plan at Elevation 9800 ..... 1.2-101
Figure 1.2-28. (Deleted) 1.2-102
Figure 1.2-29. Electrical Building Plan at Elevation 18000 ..... 1.2-103
Figure 1.2-30. (Deleted) 1.2-104
Figure 1.2-31. Electrical Building Plan at Elevation 27000 ..... 1.2-105
Figure 1.2-32. Electrical Building Plan at Elevation Various 1.2-106
Figure 1.2-33. Electrical Building Elevation Section A-A 1.2-107
Figure 1.5-1. Evolution of the GE/GEH BWR 1.5-13
Figure 1.5-2. Evolution of the BWR Reactor Design 1.5-14
Figure 1.5-3. Comparison of BWR Containments 1.5-15
Figure 1.7-1. P&ID Symbols for Valves and Valve Actuators 1.7-11
Figure 1.7-2. P&ID Symbols for Instruments 1.7-12
Figure 1.7-3. Miscellaneous P&ID Symbols 1.7-13

Figure 1.7-4. P&ID Symbols for Piping, Instrument and Electrical Lines and Line Continuations 1.7-14

1. INTRODUCTION AND GENERAL DESCRIPTION OF PLANT

1.1 INTRODUCTION

1.1.1 Format and Content

This design control document (DCD) describes the ESBWR and is written based on the general contents of the ABWR DCD, with additional material provided to be consistent with the NUREG-0800 Standard Review Plan versions as summarized in Table 1.9-20. In addition, a number of other relevant topics are addressed, e.g., Appendix 1A describes the treatment of TMI-related matters; Appendix 1B discusses plant shielding to provide access to areas and protective safety equipment for post-accident operation in response to NUREG-0737, Item II.B.2; and Appendix 1C discusses industry operating experience.

Chapter 19 provides the response to the severe accident policy statement.

1.1.2 General Description

1.1.2.1 ESBWR Standard Plant Scope

The ESBWR Standard Plant includes buildings dedicated exclusively or primarily to housing systems and equipment related to the nuclear system or controlled access to these systems and equipment. Figure 1.1-1 illustrates a conceptual layout showing the approximate relative locations of these buildings, but an individual Combined License (COL) may be arranged differently.

1.1.2.1.1 Seismic Category I Standard Plant Structures

The following Seismic Category I buildings/structures are within the design certification scope for the ESBWR:

- Reactor Building – houses safety-related structures, systems and components (SSC), except for the main control room, safety-related Distributed Control and Information System equipment rooms in the Control Building and spent fuel storage pool and associated auxiliary equipment in the Fuel Building. The Reactor Building includes the reactor, containment, refueling area and auxiliary equipment.
- Control Building – houses the main control room and safety-related controls outside the reactor building.
- Fuel Building – houses the spent fuel storage pool and its associated auxiliary equipment.
- Firewater Service Complex – consists of two fire water storage tanks and a fire pump enclosure that share a common basemat.

1.1.2.1.2 Seismic Category II and NS Standard Plant Structures

The following Seismic Category II and NS buildings/structures are included in the ESBWR standard plant scope:

- Turbine Building - houses equipment associated with the main turbine and generator, and their auxiliary systems and equipment, including the condensate purification system and the process offgas treatment system.
- Radwaste Building - houses equipment associated with the collection and processing of solid and liquid radioactive waste generated by the plant.
- Service Building - houses the equipment and control facilities associated with personnel entry into the reactor building and turbine building, eating areas, radiation protection, changing rooms, shops, and offices.
- Ancillary Diesel Building - houses the ancillary diesel generators and their associated support systems.
- Electrical Building - houses the two nonsafety-related standby diesel generators and their associated auxiliary equipment.

1.1.2.2 Type of License Request

Per 10 CFR 52, this DCD Tier 2 is submitted in support of the application for final design approval (FDA) and standard design certification for the ESBWR Standard Plant.

1.1.2.3 Number of Plant Units

For the purpose of this document, only a single standard unit is considered. If a multi-unit plant is desired, the changes and additional information needed to license a multi-unit plant would be supplied by the COL applicant.

1.1.2.4 Description of Location

This plant can be constructed at any location that meets the parameters identified in Chapter 2.

1.1.2.5 Type of Nuclear Steam Supply

This plant has a boiling water reactor nuclear steam supply system designed and supplied by GE Hitachi Nuclear Energy and designated as ESBWR.

1.1.2.6 Type of Containment

The ESBWR has a low-leakage containment vessel, which comprises the drywell and wetwell. The containment vessel is a cylindrical steel-lined reinforced concrete structure integrated with the reactor building. The containment boundary is illustrated as a dashed red line on Figure 1.1-2, which also shows key features of the safety system configuration.

1.1.2.7 Rated Core Thermal Power

The information presented herein pertains to one reactor unit with a rated thermal power level of up to 4500 MWt. The plant uses a direct-cycle, natural circulation boiling water reactor. The reactor system heat balance at rated power is shown in Figures 1.1-3a and 1.1-3b. The overall plant heat balance is provided within Section 10.1. Based on the reference design, the plant operates at an estimated gross electrical power output at rated power of 1594 MWe and net estimated electrical power output of approximately 1535 MWe. These electrical output numbers

can vary as much as ± 50 MWe depending on the Turbine Island design and site-specific conditions. The COL Applicant and its equipment suppliers will establish the rated electrical power output based on the Turbine Island design selected and site-specific conditions, and may base the COL application on a lower rated thermal power output in order to satisfy site-specific environmental parameters. The COL Applicant and its equipment suppliers will establish site-specific values for plant output (COL 1.1-1-A).

1.1.3 COL Information

1.1-1-A Establish Rated Electrical Output

The COL Applicant and its equipment suppliers will establish site-specific values for plant output (Subsection 1.1.2.7).

1.1.4 References

None.

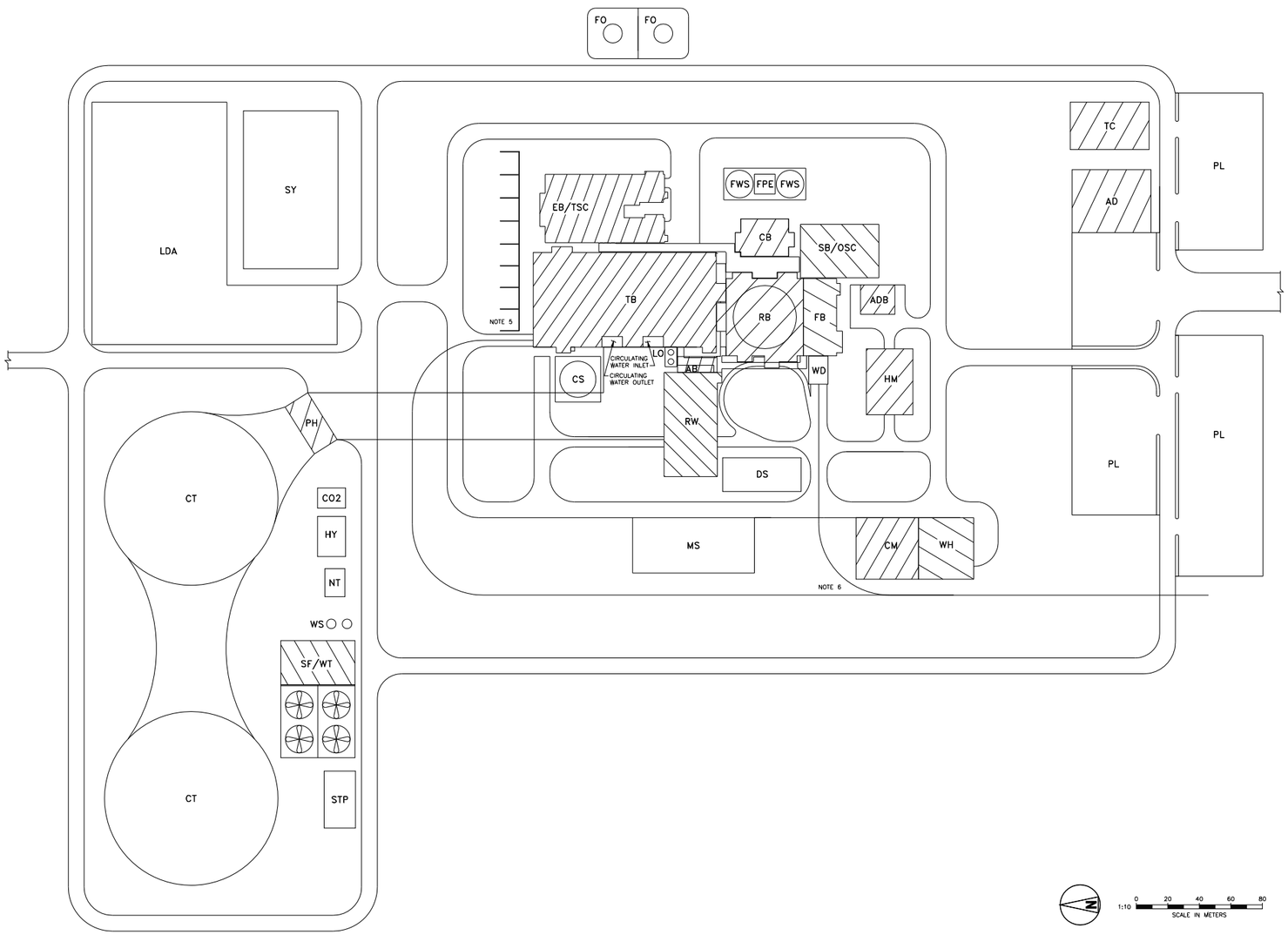

NOTES:

1. THIS PLOT PLAN REPRESENTS THE STANDARD ESBWR CONFIGURATION. THIS CONFIGURATION WILL BE MODIFIED FOR SITE SPECIFIC REQUIREMENTS DURING COMBINED OPERATING LICENSE APPLICATIONS.
2. THE REFERENCE NORMAL HEAT SINK IS SHOWN AS NATURAL DRAFT COOLING TOWERS; HOWEVER, SITE SPECIFIC AVAILABLE WET BULB AND COOLING WATER TEMPERATURES, ENVIRONMENTAL LIMITATIONS AND SPECIFIC TURBINE CONFIGURATION MAY DICTATE EITHER ONCE THROUGH OR MECHANICAL DRAFT TOWER COOLING. THESE SITE SPECIFIC ALTERNATE COOLING METHODS MAY ALSO CHANGE THE PLOT PLAN, CONDENSER AND CIRCULATING WATER SYSTEM DESIGN.
3. THIS SITE CONTAINS A SECOND RELIABLE SOURCE OF WATER FOR THE FIRE PROTECTION SYSTEM. THE SECOND RELIABLE SOURCE HAS SUFFICIENT CAPACITY TO MEET THE MAXIMUM WATER DEMAND OF THE SYSTEM FOR A PERIOD OF TWO HOURS. WATER SOURCES THAT ARE USED FOR MULTIPLE PURPOSES ENSURE THAT THE REQUIRED QUANTITY OF WATER IS DEDICATED FOR FIRE PROTECTION ONLY.
4. TUNNEL LOCATIONS ARE SHOWN FOR INFORMATIONAL PURPOSES ONLY. CIRC. WATER OUTLINE BETWEEN PUMP HOUSE AND TURBINE BUILDING IS SHOWN FOR INFORMATIONAL PURPOSES ONLY.
5. TRANSFORMER BAY SIZING WILL BE IN ACCORDANCE WITH THE PRIMARY VOLTAGE REQUIREMENTS FOUND IN DCD SUBSECTION 8.2.1.2
6. RAIL SPUR IS CONSIDERED SITE SPECIFIC

BUILDING LEGEND:

AB	=	AUXILIARY BOILER
AD	=	ADMINISTRATION BUILDING
ADB	=	ANCILLARY DIESEL BUILDING
CB	=	CONTROL BUILDING
CM	=	COLD MACHINE SHOP
CO2	=	CARBON DIOXIDE BULK STORAGE
CS	=	CONDENSATE STORAGE TANK
CT	=	MAIN COOLING TOWER
DS	=	INDEPENDENT SPENT FUEL STORAGE INSTALLATION
EB	=	ELECTRICAL BUILDING
FB	=	FUEL BUILDING
FO	=	DIESEL FUEL OIL STORAGE TANK
FPE	=	FIRE PUMP ENCLOSURE
FWS	=	FIRE WATER STORAGE TANK
HM	=	HOT MACHINE SHOP & STORAGE
HY	=	HYDROGEN BULK STORAGE
LDA	=	LAY DOWN AREA
LO	=	DIRTY/CLEAN LUBE OIL STORAGE TANK
MS	=	MISCELLANEOUS SERVICE AREA
NT	=	NITROGEN STORAGE TANK
OSC	=	OPERATION SUPPORT CENTER
PH	=	PUMP HOUSE
PL	=	PARKING LOT
RB	=	REACTOR BUILDING
RW	=	RADWASTE BUILDING
SB	=	SERVICE BUILDING
SF	=	SERVICE WATER BUILDING
STP	=	SEWAGE TREATMENT PLANT
SY	=	SWITCH YARD
TB	=	TURBINE BUILDING
TC	=	TRAINING CENTER
TSC	=	TECHNICAL SUPPORT CENTER
WD	=	WASH DOWN BAYS (EQUIPMENT ENTRY)
WH	=	WAREHOUSE
WS	=	WATER STORAGE
WT	=	WATER TREATMENT

Figure 1.1-1. ESBWR Standard Plant General Site Plan

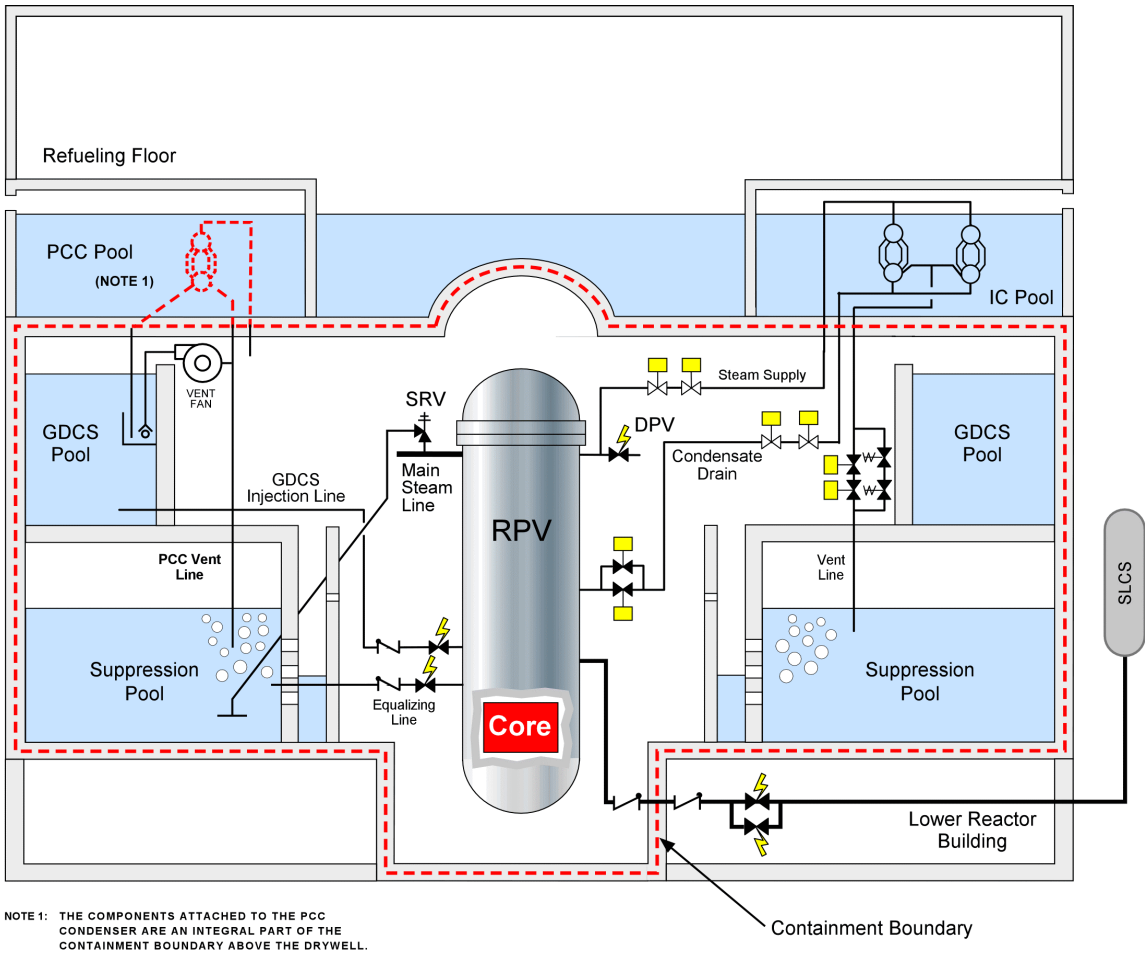

Figure 1.1-2. Safety System Configuration (not to scale)

Legend for figure:

DPV	Depressurization Valve	GDCS	Gravity-Driven Cooling System
IC	Isolation Condenser	PCC	Passive Containment Cooling
RPV	Reactor Pressure Vessel	SLCS	Standby Liquid Control System
SRV	Safety Relief Valve		

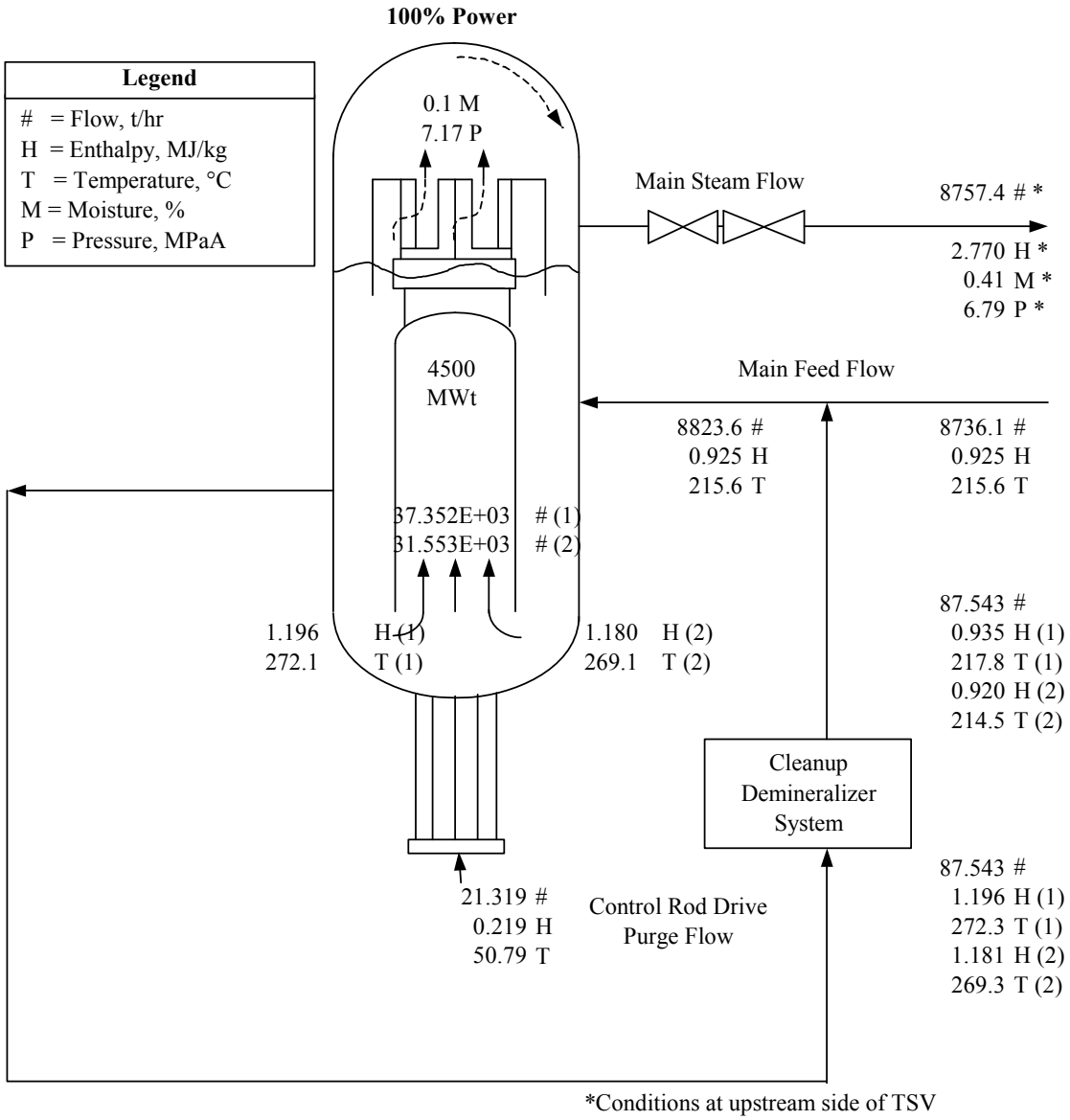

Core Thermal Power	4500.0
Cleanup Losses	-6.3
Other System Losses	-1.4
Turbine Cycle Use	4492.3 MWt

Note: For parameters which are changed significantly with core flow, two values are given at the expected upper and lower core flow. The first value (1) is evaluated at the upper core flow, and the second (2) at the lower core flow. The range considers uncertainties as decribed in NEDE-33083P Supplement 1, and core exposure dependence. Heat Balances for off-rated FW temperatures are given in NEDO-33338.

Figure 1.1-3a. Reactor System Heat Balance at 100% Power (SI Units)

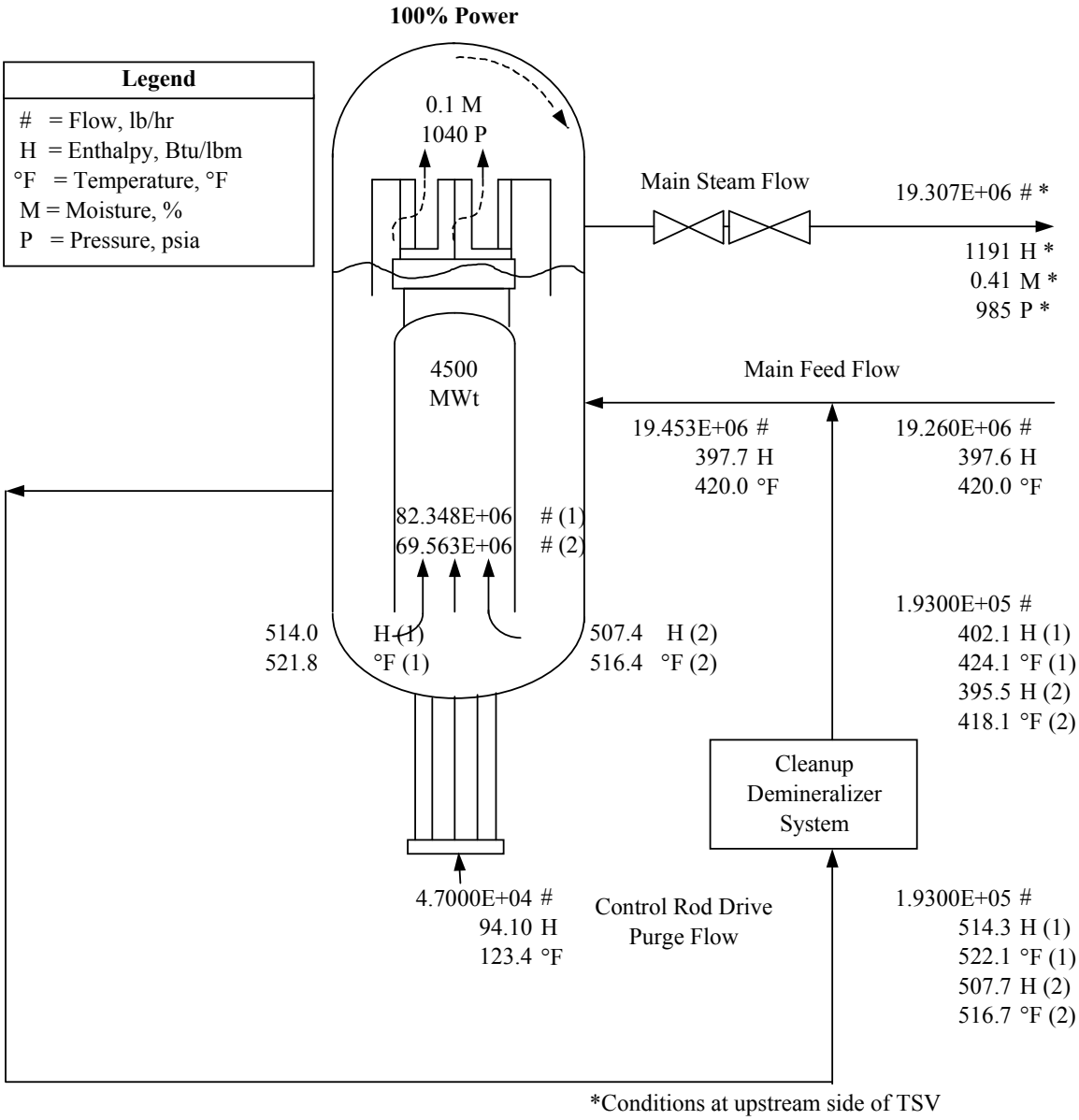

Core Thermal Power	4500.0
Cleanup Losses	-6.3
Other System Losses	-1.4
Turbine Cycle Use	4492.3 MWt

Note: For parameters which are changed significantly with core flow, two values are given at the expected upper and lower core flow. The first value (1) is evaluated at the upper core flow, and the second (2) at the lower core flow. The range considers uncertainties as decribed in NEDE-33083P Supplement 1, and core exposure dependence. Heat Balances for off-rated FW temperatures are given in NEDO-33338.

Figure 1.1-3b. Reactor System Heat Balance at 100% Power (English Units)

1.2 GENERAL PLANT DESCRIPTION

1.2.1 Principal Design Criteria

The principal design criteria governing the ESBWR Standard Plant are presented in two ways. First, the criteria are classified as applicable to either a power generation function or a safety-related function. Second, they are grouped according to system. Although the distinctions between power generation and safety-related functions are not always clear-cut and are sometimes overlapping, the functional classification facilitates safety analysis reviews, while the grouping by system facilitates understanding both the system function and design.

The principal plant structures are listed below:

- **Reactor Building** — houses all safety-related structures, systems and components, except for the main control room, safety-related distributed control and information system equipment rooms and spent fuel storage pool. This includes the reactor, containment, equipment rooms/compartments outside containment, the refueling area with the fuel buffer pool, and auxiliary equipment area.
- **Control Building** — houses the main control room and all safety-related controls outside the reactor building.
- **Fuel Building** — houses the spent fuel storage pool, its auxiliary equipment and the lower end of the fuel transfer machine.
- **Turbine Building** — houses equipment associated with the main turbine and generator and their auxiliary systems and equipment including the condensate purification system and the process offgas treatment system.
- **Radwaste Building** — houses equipment associated with the collection and processing of solid and liquid radioactive waste generated by the plant.
- **Electrical Building** — houses the two nonsafety-related standby diesel generators and their associated auxiliary equipment.
- **Service Building** — houses the equipment and control facilities associated with personnel entry into the reactor building and turbine building, eating areas, radiation protection, changing rooms, shops, and offices.
- **Ancillary Diesel Building** — houses the ancillary diesel generators and their associated support systems.
- **Firewater Service Complex** — consists of two fire water storage tanks and a fire pump enclosure that share a common basemat.

1.2.1.1 General Power Generation (Nonsafety) Design Criteria

- The plant is designed to produce electricity from a turbine generator unit using steam generated in the reactor.
- Heat removal systems are provided with sufficient capacity and operational adequacy to remove heat generated in the reactor core for the full range of normal operational conditions and anticipated operational occurrences.

- Backup heat removal systems are provided to remove decay heat generated in the core under circumstances wherein the normal operational heat removal systems become inoperative. The capacity of such systems is adequate to prevent fuel cladding damage.
- The fuel cladding, in conjunction with other plant systems, is designed to retain integrity so that the consequences of any failures are within acceptable limits throughout the range of normal operational conditions and anticipated operational occurrences for the design life of the fuel.
- Control equipment is provided to allow the reactor to respond automatically to load changes and anticipated operational occurrences.
- Reactor power level is manually controllable.
- Control of the reactor is possible from a single location.
- Reactor controls, including status displays and alarms, are arranged to allow the operator to rapidly assess the condition of the reactor system and locate system malfunctions.
- Interlocks or other automatic equipment are provided as backup to procedural control to avoid conditions requiring the functioning of safety-related systems or engineered safety features.
- The station is designed for routine continuous operation whereby activation products, fission products, activated corrosion products and coolant dissociation products are processed to remain within acceptable limits.

1.2.1.2 General Safety Design Criteria

- The station design conforms to applicable codes and standards as described within Section 1.9.
- The station is designed, fabricated, erected and operated in such a way that the release of radioactive material to the environment does not exceed the limits and guideline values of applicable government regulations pertaining to the release of radioactive materials for normal operations, for anticipated operational occurrences and for accidents.
- The reactor core is designed so its nuclear characteristics do not contribute to a divergent power transient.
- The reactor is designed so there is no tendency for divergent oscillation of any operating characteristic considering the interaction of the reactor with other appropriate plant systems.
- The design provides means by which plant operators are alerted when limits on the release of radioactive material are approached.
- Sufficient indications are provided to allow determination that the reactor is operating within the envelope of conditions considered safe by plant analysis.
- Those portions of the nuclear system that form part of the reactor coolant pressure boundary (RCPB) are designed to retain integrity as a radioactive material containment barrier following anticipated operational occurrences and to ensure cooling of the reactor core following accidents.

- Safety-related systems and engineered safety features are designed to ensure that no damage to the RCPB results from internal pressures caused by anticipated operational occurrences, accidents and special events.
- Where positive, precise action is immediately required in response to anticipated operational occurrences and accidents, such action is automatic and requires no decision or manipulation of controls by plant operations personnel.
- Safety-related functions are performed by equipment of sufficient redundancy and independence so that no single failure of active components, or of passive components in certain cases in the long term, prevents performance of the safety-related functions. For systems or components to which IEEE 603 applies, single failures of either active or passive electrical components are considered in recognition of the higher anticipated failure rates of passive electrical components relative to passive mechanical components.
- Provisions are made for control of active components of safety-related systems from the control room.
- Safety-related systems are designed to permit demonstration of their functional performance requirements.
- The design of safety-related structures, systems and components includes allowances for natural environmental disturbances such as earthquakes, floods, and storms at the station site.
- Standby electrical DC power sources have sufficient capacity to power those safety-related systems requiring electrical power concurrently.
- Standby electrical power sources are provided to allow prompt reactor shutdown and removal of decay heat even if normal auxiliary power is not available.
- A containment is provided, the boundary of which completely encloses the reactor systems, drywell and wetwell (or suppression chamber). The containment employs the pressure suppression concept.
- The containment design provides for the testing of containment integrity and leak tightness at periodic intervals.
- A Reactor Building is provided that encloses the containment. The areas above the containment top slab and drywell head are flooded in a pool of water during operation. The Reactor Building forms an additional barrier helping to control any potential post-accident containment leakage. The water pools above the containment top slab and drywell head are effective in scrubbing any potential containment leakage through that path.
- The containment and Reactor Building in conjunction with other safety-related features limit radiological effects of design basis accidents to less than the prescribed acceptable limits.
- Provisions are made for removing energy from the containment as necessary to maintain the integrity of the containment system following accidents that release energy to the containment.

- Piping that penetrates the containment and could serve as a path for the uncontrolled release of radioactive material to the environs is automatically isolated when necessary to limit the radiological effects from an uncontrolled release to less than acceptable limits.
- Emergency core cooling systems are provided to limit fuel cladding temperature to less than the limit of 10 CFR 50.46 in the event of a design basis loss-of-coolant accident (LOCA).
- The emergency core cooling systems provide for continuity of core cooling over the complete range of postulated break sizes in the reactor coolant pressure boundary piping.
- Emergency core cooling is initiated automatically when required regardless of the availability of offsite power supplies and the normal generating system of the station.
- The control room is shielded against radiation so that continued occupancy under design basis accident conditions is possible.
- In the event that the control room becomes uninhabitable, it is possible to bring the reactor from power range operation to cold shutdown conditions by utilizing alternative controls and equipment that are available outside the control room.
- Fuel handling and storage facilities are designed to prevent inadvertent criticality and to maintain shielding and cooling of spent fuel as necessary to meet operating and offsite dose constraints.
- Systems that have redundant or backup safety-related functions are physically separated, and arranged so that credible events causing damage to one division/system of safety-related equipment have minimum prospects for compromising the functional capability of the redundant divisions/systems.

1.2.1.3 Nuclear System Criteria

- The fuel cladding is a fission product barrier designed to retain integrity so that any fuel failures occurring during normal operation do not result in dose consequences that exceed acceptable limits.
- The fuel cladding in conjunction with other plant systems is designed to retain integrity so that dose consequences as a result of any fuel failures occurring during any anticipated operational occurrence are within acceptable limits.
- Those portions of the nuclear system that form part of the reactor coolant pressure boundary are designed to retain integrity as a fission product barrier during normal operation and following anticipated operational occurrences, and to retain sufficient integrity to ensure core cooling following accidents.
- The capacity of the heat removal systems provided to remove heat generated in the reactor core for the full range of normal operational transients as well as for anticipated operational occurrences is adequate to prevent fuel cladding damage that results in dose consequences exceeding acceptable limits.
- The reactor is capable of being shut down automatically in sufficient time to prevent fuel cladding damage during anticipated operational occurrences.

- The reactor core and reactivity control system are designed such that control rod action is capable of making the core subcritical and maintaining subcriticality even with two control rods (associated with the same hydraulic control unit) of highest reactivity worth fully withdrawn and unavailable for insertion.
- Backup reactor shutdown capability is provided independent of normal reactivity control provisions. This backup system has the capability to shut down the reactor from any operating condition and subsequently to maintain the shutdown condition.
- The nuclear system is designed so there is no tendency for divergent oscillation of any operating characteristic, considering the interaction of the nuclear system with other appropriate plant systems.

1.2.1.4 Electrical Power Systems Criteria

Sufficient normal, auxiliary and standby sources of electrical power are provided to attain prompt shutdown and continued maintenance of the station in a safe condition under all credible circumstances. The DC power sources are adequate to accomplish required safety-related functions under all postulated accident conditions.

1.2.1.5 Auxiliary Systems Criteria

- The ESBWR requires the following safety-related auxiliary systems and components: Standby Liquid Control (SLC) system, Main Control Room (MCR) Emergency Filter Units (EFUs) and emergency lighting power to supply the Seismic Category I mounted emergency lighting in the MCR and Remote Shutdown System (RSS) rooms.
- Other nonsafety-related auxiliary systems and components, such as service water, cooling water, fire protection, heating and ventilation, communications and normal lighting, are designed to function as needed during normal conditions. They can also operate during accident conditions but are not required to do so.
- Auxiliary systems that are not required to achieve safe shutdown of the reactor or maintain it in a safe condition are designed so that a failure of these systems does not prevent the safety-related systems from performing their design functions.

1.2.1.6 Shielding and Access Control Criteria

Radiation shielding is provided and access control patterns are established to allow a properly trained operating staff to control radiation doses within the limits of applicable regulations in any normal mode of plant operation.

1.2.1.7 Power Conversion Systems Criteria

Components of the power conversion systems are designed to attain the following basic objectives:

- The components of the power conversion systems are designed to produce electrical power from the steam coming from the reactor, condense the steam into water, and return the water to the reactor as heated feedwater with a major portion of its noncondensable gases and particulate impurities removed.

- The components of the power conversion systems are designed so that any fission products or radioactivity associated with the steam and condensate during normal operation are safely contained inside the system or are released under controlled conditions in accordance with waste disposal procedures.

1.2.1.8 Nuclear System Process Control Criteria

- Control equipment is provided to allow the reactor to respond automatically to load changes within design limits.
- Manual control of the reactor power level is provided.
- Nuclear system process displays, controls and alarms are arranged to allow the operator to rapidly assess the condition of the nuclear system and to locate process system malfunctions.

1.2.1.9 Electrical Power System Process Control Criteria

- The safety-related DC power systems are designed with four divisions. During anticipated operational occurrences, operation of any three mechanical trains is adequate to safely place the unit in the safe shutdown condition and meet all other design requirements associated with these events. For loss-of-coolant accident events, operation of any three mechanical trains is adequate to safely place the unit in a safe shutdown condition. Operation of any two safety-related electrical divisions ensures that three mechanical trains will remain operational.
- Protective relaying is used, in the event of equipment failure, to detect and isolate faulted equipment from the system with a minimum of disturbance to uninvolved systems or equipment.
- Two nonsafety-related standby diesel generators (DGs) are started and connected to both safety-related and nonsafety-related loads if other AC power sources are lost. If these nonsafety-related DGs are also inoperable, all safety-related loads are powered by the safety-related divisional batteries.
- The function of key safety-related electrical systems and components are monitored in the control room.
- Two ancillary diesel generators provide electrical power to a subset of the loads on the plant investment protection trains and to loads that have been classified as Criterion B under the Regulatory Treatment of Non-Safety Systems program.

1.2.2 Plant Description

1.2.2.1 Nuclear Steam Supply

1.2.2.1.1 Reactor Pressure Vessel and Internals

The Reactor Pressure Vessel (RPV) assembly consists of the pressure vessel and its appurtenances, supports and insulation, and the reactor internals enclosed by the vessel (excluding the core, in-core nuclear instrumentation, neutron sources, control rods, and control rod drives).

The reactor coolant pressure boundary (RCPB) of the RPV retains integrity as a radioactive material barrier during normal operation and following anticipated operational occurrences and retains integrity to contain coolant during design basis accidents (DBAs).

Certain RPV internals support the core and support instrumentation used during a DBA. Other RPV internals direct coolant flow, separate steam from the steam/water mixture leaving the core, hold material surveillance specimens, and support instrumentation used for normal operation.

The RPV, together with its internals, provides guidance and support for the fine-motion control rod drives (FMCRDs). Reactor internals associated with the SLC system are used to distribute sodium pentaborate solution when necessary to achieve core subcriticality via means other than inserting of control rods.

The RPV restrains the FMCRDs to prevent ejection of a control rod connected with a drive in the event of a postulated failure of a drive housing.

RPV

The RPV consists of a vertical, cylindrical pressure vessel of welded construction, with a removable top head, and head flanges, seals and bolting. The vessel also includes penetrations, nozzles, shroud support, and venturi-shaped flow restrictors in the steam outlet nozzles. The shroud support carries the weight of peripheral fuel assemblies, neutron sources, core plate, top guide, shroud, chimney and chimney head with steam separators, and it laterally supports the fuel assemblies. Sliding block type supports near the bottom of the vessel support and anchor the vessel on the RPV support structure in the containment.

The RPV dimensions are shown in Table 5.3-3, and its key features are shown in Figure 5.3-3.

The overall RPV height permits natural circulation driving forces to produce abundant core coolant flow. An increased internal flow-path length relative to most prior BWRs is provided by a long "chimney" in the space, which extends from the top of the core to the entrance to the steam separator assembly. This chimney feature existed in the Humboldt Bay and Dodewaard natural circulation BWRs. The chimney and steam separator assembly are supported by a shroud assembly, which extends to the top of the core. The large RPV volume provides a large reserve of water above the core, which translates directly into a much longer period of time (compared to prior BWRs) before core uncovery can occur as a result of feedwater flow interruption or a LOCA. This gives an extended period of time during which automatic systems or plant operators can reestablish reactor inventory control using any of several normal, nonsafety-related systems capable of injecting water into the reactor. Timely initiation of these systems precludes the need for activation of emergency safety-related equipment. The large RPV volume also reduces the reactor pressurization rates that develop and can eventually lead to actuation of the safety relief valves when the reactor is suddenly isolated from the normal heat sink.

The FMCRDs are mounted into permanently attached CRD housings. The CRD housings extend through, and are welded to control rod drive (CRD) penetrations (stub tubes) formed in the RPV bottom head.

A flanged nozzle is provided in the top head for bolting on of the flange associated with the instrumentation for the initial vibration test of internals.

Sliding block type supports carry the vessel. The sliding supports are provided at a number of positions around the periphery of the vessel. One end of each sliding support is attached to a

circumferential RPV flange, and the other end is captured into sets of guide blocks that are anchored to the pedestal support brackets. Stabilizers help the upper portion of the RPV resist horizontal loads. Lateral support among the CRD housings and in-core housings are provided by restraints that, at the periphery, are supported from CRD housing restraint beams.

The RPV insulation is supported from the shield wall surrounding the vessel. A steel frame, which is independent of the vessel and piping, supports insulation for the upper head and flange. Insulation access panels and insulation around penetrations are designed for ease of installation and removal for vessel inservice inspection and maintenance operations.

The RCPB portions of the RPV and appurtenances are classified as Quality Group A, Seismic Category I. RPV design, materials, manufacturing (e.g., welding), fabrication, testing (e.g., fracture toughness), material surveillance, examination and inspection requirements are provided in Section 5.3.

Access for examinations of the installed RPV is incorporated into the design of the vessel, reactor shield wall, and vessel insulation.

Reactor Pressure Vessel Internals

The reactor pressure vessel internals consist of core support structures and other equipment.

The core support structures locate and support the fuel assemblies, form partitions within the reactor vessel to sustain pressure differentials across the partitions, and direct the flow of coolant water. The structures consists of a shroud, shroud support, core plate, top guide, orificed fuel supports and control rod guide tubes (CRGTs).

The other reactor internals consist of control rods, feedwater spargers, SLC system distribution headers, in-core guide tubes, surveillance specimen holders, chimney, chimney partitions, chimney head and steam separator assembly, and the steam dryer assembly.

The shroud and chimney make up a stainless steel cylindrical assembly that provides a partition to separate the upward flow of coolant through the core from the downward recirculation flow outside the core. This partition separates the core region from the downcomer annulus.

The solid stainless steel core plate is machined to a final configuration with round openings. The core plate provides lateral support and guidance for the CRGTs, in-core flux monitor guide tubes, peripheral fuel supports and startup neutron sources. The core plate also supports the last two items vertically.

The solid stainless steel top guide is machined to a final configuration with square openings. Each opening provides lateral support and guidance for four fuel assemblies or, in the case of peripheral fuel, less than four fuel assemblies. Holes are provided in the bottom surface of the top guide where the sides of the openings intersect, to anchor the in-core instrumentation detectors and start-up neutron sources.

The fuel assemblies are vertically supported in two ways depending upon whether they are located next to a control rod or not. The peripheral fuel assemblies, which are located at the outer edge of the active core, not adjacent to a control rod, are supported by the peripheral fuel supports. The peripheral fuel supports contain flow-restricting sections to provide the appropriate coolant flow rate to the peripheral fuel assemblies. The remaining fuel assemblies, which are adjacent to the control rods, are supported by the orificed fuel supports and CRGTs.

Each orificed fuel support and CRGT supports four fuel assemblies vertically upward and provides lateral support to the bottom of the fuel. The orificed fuel support is supported in the CRGT that is supported laterally by the core plate.

The control rod passes through a cruciform opening in the center of the orificed fuel support. Each guide tube is designed as a guide for the lower end of the control rod. The lower end of the CRGT is supported by the CRD housing, which in turn transmits the weight of the orificed fuel support and CRGT, and the four fuel assemblies to the reactor vessel bottom head. The upper end of the CRD housing is welded to a stub tube that is directly welded to the bottom of the vessel. Coolant flow, which enters the lower plenum of the vessel, travels upward, adjacent to the guide tubes and enters the orificed fuel supports just below the core plate. The orificed fuel supports contain four flow-restricting openings that control coolant flow to the fuel assemblies.

The base of the CRGT is provided with a device for coupling to the FMCRD. The CRD is restrained from ejection, in the case of a stub tube to CRD housing weld failure, by the coupling of the drive with the guide tube base. In this event, the guide tube flange contacts the core plate and thus restrains the ejection. The coupling also prevents ejection if the CRD housing fails below the stub tube weld. In this event, the guide tube and fuel support remains supported by the CRD housing left intact above the stub tube weld.

The control rods are cruciform-shaped neutron absorbing members that can be inserted or withdrawn from the core by the FMCRD to control reactivity and reactor power.

Each of the feedwater lines is connected to a sparger via an RPV nozzle. The feedwater spargers are stainless steel headers located in the mixing plenum above the downcomer annulus. Each sparger, in two halves, with a tee connection at the middle, is fitted to the corresponding RPV feedwater nozzle. The sparger tee inlet is connected to the RPV nozzle safe end by a double thermal sleeve arrangement. Feedwater flow enters the center of the spargers and is discharged radially inward to mix the cooler feedwater with the downcomer flow from the steam separators and steam dryers.

In-core guide tubes (ICGTs) protect the in-core flux monitoring instrumentation from flow of water in the bottom head plenum. The ICGTs extend from the top of the in-core housing to the top of the core plate. The local power range monitoring (LPRM) detectors for the Power Range Neutron Monitoring (PRNM) subsystem and the detectors for the Startup Range Neutron Monitoring (SRNM) subsystem are inserted through the guide tubes.

A latticework of clamps, tie bars, and spacers give lateral support and rigidity to the ICGTs. The stabilizers are connected to the shroud support structure.

Surveillance specimen capsules, which are held in capsule holders mentioned earlier, are located at a common elevation in the core beltline region. The capsule holders are nonsafety-related internal components. Capsule holder brackets welded to the vessel cladding mechanically retain the capsule holders, which allow for capsule removal and re-installation.

As a natural circulation reactor, the ESBWR requires additional elevation head created by the density difference between the saturated water-steam mixture exiting the core and the subcooled water exiting the region just below the separators and the feedwater inlet. The chimney provides this elevation head or driving head necessary to sustain the natural circulation flow. The chimney is a long cylinder mounted to the top guide and which supports the steam separator

assembly. The chimney forms the annulus separating the subcooled recirculation flow returning downward from the steam separators and feedwater, from the upward steam-water mixture flow exiting the core. Inside the chimney are partitions that separate groups of 16 fuel assemblies and thereby form smaller chimney sections limiting cross flow and flow instabilities. The chimney partitions are removable to facilitate refueling operations.

The BWR direct cycle requires separation of steam from the steam-water mixture leaving the core. This is accomplished inside the RPV by passing the mixture sequentially first through an array of steam separators attached to a removable cover on the top of the chimney assembly, and then through standard BWR steam dryers. The steam dryer and the separator assembly is designed to provide outlet dry steam with a moisture content ≤ 0.1%.

The core support structures are classified as ASME Code Class CS, Seismic Category I. The design, materials, manufacturing, fabrication, examination, and inspection used in the construction of the core support structures meet the requirements of ASME Code Section III, subsection NG, Core Support Structures.

These structures are code-stamped accordingly. Other reactor internals are designed per the guidelines of American Society of Mechanical Engineers (ASME) Code NG-3000 and are constructed so as not to adversely affect the integrity of the core support structures as required by NG-1122.

Special controls on material fabrication processes are exercised when austenitic stainless steel is used for construction of RPV internals in order to avoid stress corrosion cracking during service.

Design and construction of the RPV internals ensure that the internals can withstand the effects of flow-induced vibration.

1.2.2.1.2 Nuclear Boiler System

The primary functions of the Nuclear Boiler System (NBS) are:

- To deliver steam from the RPV to the turbine main steam system (TMSS);
- To deliver feedwater from the Condensate and Feedwater System (C&FS) to the RPV;
- To provide overpressure protection of the RCPB;
- To provide automatic depressurization of the RPV in the event of a LOCA where the RPV does not depressurize rapidly; and
- With the exception of monitoring the neutron flux, to provide the instrumentation necessary for monitoring conditions in the RPV such as RPV pressure, metal temperature, and water level.

The main steamlines (MSLs) are designed to direct steam from the RPV to the TMSS; the feedwater (FW) lines to direct feedwater from the C&FS to the RPV; the RPV instrumentation to monitor the conditions within the RPV over the full range of reactor power operation.

The NBS contains the valves necessary for isolation of the MSLs, FW lines, and their drain lines at the containment boundary.

The NBS contains the safety relief valve discharge lines, including the steam quencher located in the suppression pool at the end of each discharge line.

The NBS also contains the RPV head vent line and non-condensable gas removal line.

Main Steamlines

The NBS contains the portion of the MSLs from their connection to the RPV to the boundary with the TMSS which occurs at the seismic interface located downstream of the outboard main steam isolation valves (MSIVs).

The main steamlines are Quality Group A from the RPV out to and including the outboard MSIVs, and Quality Group B from the outboard MSIVs to the turbine stop valves. They are Seismic Category I from the RPV out to the seismic interface.

Main Steamline Flow Restrictor

The main steamline flow restrictor is essentially a flow restricting venturi built into the RPV MSL nozzle of each of the four main steamlines. The restrictor limits the coolant blowdown rate from the reactor vessel in the event a main steamline break occurs anywhere downstream of the nozzle. The MSL flow restrictors thus limit offsite dose from postulated MSL breaks outside containment, while the MSIVs are closing. The flow restrictors also limit the intensity of the depressurization level swell and differential pressures momentarily developed on core internals following a MSL break.

The flow restrictors are designed and fabricated in accordance with the ASME Code and designed in accordance with ASME Fluid Meters Handbook. The flow restrictors have no moving parts.

The restrictors are also used to monitor steam flow and to initiate closure of the MSIVs when the steam flow exceeds pre-selected operational limits. The vessel dome pressure and the venturi throat pressure are used as the high and low pressure sensing locations.

Main Steamline Isolation Valves

Each MSIV assembly consists of a main steamline isolation valve, connecting piping and associated controls.

There are two MSIVs welded into each of the four MSLs. On each MSL there is one MSIV inside the containment and one MSIV outside the containment. Each set of two MSIVs isolate their respective MSL upon receipt of isolation signal.

The MSIVs are gate valves. Section 5.4.5 provides additional details about the MSIV design configuration and operation.

The MSIV has a fast-closing time greater than or equal to the value used in the MSIV closure (non-accident) events and less than or equal to the value used in the main steamline break accident analysis.

When all the MSIVs are closed, the combined leakage through the MSIVs for all four MSLs is less than or equal to the value used in the LOCA inside containment radiological analysis.

Feedwater Lines (FWLs)

The feedwater piping consists of two FWLs connecting to a feedwater supply header. Three containment isolation valves, consisting of a simple check valve inside the drywell and two process-medium operated gate valves outside the containment, accomplish isolation of each

FWL. Also included in this portion of the FWL is a manual maintenance valve located between the inboard isolation valve and the reactor nozzle. The feedwater line upstream of the outboard isolation valve contains a simple check valve and a seismic interface restraint. The outboard isolation valve and the simple check valve provide a quality group transitional point in the FWLs.

The feedwater piping is Quality Group A from the RPV out to and including the outboard isolation valve, and Quality Group B from the outboard isolation valve to the last stage feedwater heaters. The feedwater piping, and connected piping that is 64 mm (2.5 inches) or larger in nominal diameter, are Seismic Category I from the RPV to the seismic interface, and Seismic Category NS beyond the seismic interface.

Safety Relief Valves

The nuclear pressure relief system consists of safety relief valves (SRVs) located on the MSLs between the RPV and the inboard MSIV. The SRVs provide two main protection functions:

- Overpressure Safety Operation: The SRVs function as safety valves and open to prevent nuclear system overpressurization. They are self-actuating by inlet steam pressure.

  The safety mode of operation is initiated when direct and increasing static inlet steam pressure overcomes the restraining spring and frictional forces acting against the inlet steam pressure at the valve disc. This moves the disc in the opening direction. The condition at which this actuation is initiated corresponds to the set-pressure value stamped on the nameplate of the valves.

  The SRVs meet the requirements of ASME Code Section III. The rated capacity of the SRVs is sufficient to prevent the pressure within the RPV from exceeding 120% of the design pressure during Anticipated Transients Without Scram (ATWS) events.

- Automatic Depressurization Operation: Ten of the SRVs open automatically during a LOCA to depressurize the reactor vessel. This is discussed separately, below.

  The power supply for the system is safety-related. The SRV controls are classified as safety-related.

  Each SRV has one dedicated, independent pneumatic accumulator, which provides the safety-related, ensured nitrogen supply for opening the valve.

  The SRVs are flange mounted onto forged outlet fittings located on the top of the main steamline piping in the drywell. The SRVs discharge through lines routed to quenchers in the suppression pool.

Automatic Depressurization System

The Automatic Depressurization System (ADS) function of the NBS depressurizes the RPV in sufficient time for the Gravity-Driven Cooling System (GDCS) injection flow to replenish core coolant to maintain core temperature below design limits in the event of a LOCA. It also maintains the reactor depressurized for continued operation of GDCS after an accident without need for power.

The ADS consists of SRVs and depressurization valves (DPVs) and their associated instrumentation and controls.

The DPVs are flange-mounted on horizontal stub lines connected to the RPV at about the elevation of the MSLs. Upon actuation, the DPVs discharge into the drywell.

The SRVs and DPVs are actuated in groups of valves at staggered times by delay timers as the reactor undergoes a relatively slow depressurization. This minimizes reactor level swell during the depressurization, thereby enhancing the passive re-supply of coolant by the GDCS.

The use of a combination of SRVs and DPVs to accomplish the ADS function improves ADS reliability against hypothetical common-mode failures of otherwise non-diverse ADS components. It also minimizes components and maintenance as compared to using only SRVs or only DPVs for this function. By using the SRVs for two different purposes, the number of DPVs required is minimized. By using DPVs for the additional depressurization capability needed beyond what the SRVs can provide, the total number of SRVs, SRV discharge lines, and quenchers in the suppression pool is minimized. The need for SRV maintenance, periodic calibration and testing, and the potential for simmering are minimized with this arrangement.

The ADS automatically actuates on a low RPV water level signal that persists for a preset time. Two-out-of-four logic is used to activate the SRVs and DPVs. The persistence requirement for the low RPV water level signal ensures that momentary system perturbations do not actuate ADS when it is not required. The two-out-of-four logic ensures that a single failure does not cause spurious system actuation while also ensuring that a single failure cannot prevent initiation. To address small break LOCA events that result in reactor water level remaining above the ADS setpoint, ADS will be automatically initiated based on high drywell pressure after a one hour delay. Details of the actuation logic are provided in Subsection 7.3.1. The ADS may also be manually initiated from the main control room.

Depressurization Valves

The DPVs are of a non-leak/non-simmer/non-maintenance design. They are straight-through, squib-actuated, non-reclosing valves with a metal diaphragm seal. The valves are connected to an inlet pipe and an outlet pipe. Each valve provides about twice the depressurization capacity of an SRV. Each DPV is closed with a cap covering the inlet chamber. The cap readily shears off at the metal diaphragm seal when impacted by the valve piston, which is actuated by the explosive initiator-booster. This opens the inlet hole through the valve. The sheared cap is hinged such that it drops out of the flow path and does not block the valve. The DPVs are designed so that there is no leakage across the cap throughout the life of the valve.

One booster assembly, which contains four initiators (squibs), is capable of actuating the tension bolt (shearing plunger). A battery-powered independent firing circuit actuates each initiator. Each initiator contains pin connections that are connected through a wire bridge in the bottom of the initiator. The firing of one initiator is adequate to activate the booster, which actuates the tension bolt and valve piston to open the valve. The initiators are fired by a voltage source appropriate to the necessary current. The voltage source is required to be at least as reliable as the redundant sources powering the Safety-Related Distributed Control and Information System (Q-DCIS). The valve design and initiator-booster design are such that there is substantial thermal margin between operating temperature and the self-ignition point of the initiator-booster.

NBS Instrumentation

The NBS RPV instrumentation monitors and provides control inputs for operational variables during plant operation.

The NBS contains the instrumentation for monitoring the reactor pressure, metal temperature, and water level. The reactor pressure and water level instruments are used by multiple systems, both safety-related and nonsafety-related.

Pressure indicators and transmitters detect reactor vessel internal pressure from the same instrument lines used for measuring reactor vessel water level.

RPV coolant temperatures are determined by measuring saturation pressure (which gives the saturation temperature), outlet flow temperature to the Reactor Water Cleanup/Shutdown Cooling (RWCU/SDC) system, and RPV bottom head drain line temperature. Temperatures of the reactor vessel outside surface (metal) are measured at the head flange and the bottom head locations. Temperatures needed for operation and for operating limits are obtained from these measurements.

The instruments that sense the water level are differential pressure devices calibrated for a specific RPV pressure (and corresponding liquid temperature). The water level measurement instrumentation is the condensate reference chamber type. Instrument reference zero for all the RPV water level ranges is the top of the active fuel. The following is a description of each water level range.

- Shutdown Range Water Level

  This range is used to monitor the reactor water level during shutdown conditions when the reactor system is flooded for maintenance and head removal. The two RPV instrument taps used for this water level measurement are located at the top of the RPV head, and just below the dryer skirt.

- Narrow Range Water Level

  This range is used to monitor reactor water level during normal power operation. This range uses the RPV taps near the top of the steam outlet nozzles and near the bottom of the dryer skirt. The Feedwater Control System uses this range for its water level control and indication inputs. The RPS also uses this range for scram initiation.

- Wide Range Water Level

  This range is used to monitor reactor water level for events where the water level exceeds the range of the narrow range water level instrumentation, and is used to generate the low reactor water level trip signals, which indicate a potential LOCA. This range uses the RPV taps at the elevations near the top of the steam outlet nozzles and the taps below the bottom of active fuel.

- Fuel Zone Range Water Level

  This range is provided for post-accident monitoring and provides the capability to monitor the reactor water level below the wide range water level instrumentation. This range uses the RPV taps at the elevations near the top of the steam outlet nozzles and the taps below the bottom of active fuel.

Thermocouples are located in the discharge exhaust pipes of the SRVs. The temperature signals go to a multipoint recorder with an alarm, and are activated by any temperature in excess of a set temperature, signaling that one of the SRV seats has started to leak.

Control room indication and alarms are provided for the important plant parameters monitored by the NBS.

NBS ASME Code Requirements

The major NBS mechanical components are designed to meet ASME Code Requirements as listed in Section 5.2.

1.2.2.1.3 RPV Natural Circulation Process

The ESBWR uses natural circulation to provide core flow. Natural circulation in the ESBWR is established due to the density differences between the water in the vessel annulus (outside the shroud and chimney) and the steam/water mixture inside the shroud and chimney. The colder, higher density water in the annulus creates a higher pressure or a driving head when compared to the hotter, lower density fluid (steam/water) in the core and chimney. The energy produced in the core of the reactor heats the water entering at the bottom of the core, and begins converting it to a steam/water mixture. In the core, the subcooled water is first heated to the saturation temperature, and then as more heat is added boiling of the core coolant starts. As the coolant travels upward through the core, the percent of saturated steam increases until, at the exit of the core, the average percent of saturated steam is approximately 18 weight %. This steam/water mixture travels upward through the chimney to the steam separators, where centrifugal force separates the steam from the water. The separated, saturated water returns to the volume around the separators, while the slightly "wet" steam travels upward to the steam dryer and eventually out the main steamline nozzles and piping to the turbine.

Cooler feedwater re-enters the vessel at the top of the annulus, where it mixes with the saturated water around the separators and subcools this water. The resulting mixture is subcooled only a few degrees below the saturation temperature. The cooler mixture then travels downward through the annulus to re-enter the core. The water therefore forms a recirculation loop within the vessel. The mass of steam leaving the vessel is matched by the mass of feedwater entering.

The chimney adds height to this density difference, in effect providing additional driving head to the circulation process. A forced circulation BWR acts in the same basic manner but uses the internal or external pumps to add driving head to this recirculation flow instead of the elevation head provided by the chimney.

1.2.2.2 Controls and Instrumentation

1.2.2.2.1 Rod Control and Information System

The Rod Control and Information System (RC&IS) is to safely and reliably provide:

- The capability to control reactor power level by controlling the movement of control rods in the reactor core in manual, semiautomatic, and automated modes of plant operations.
- Display of summary information about control rod positions and status in the main control room.

- Transmission of fine motion control rod drive (FMCRD) status and control rod positions and status data to other plant systems (e.g., the Nonsafety-Related Distributed Control and Information System).
- Automatic control rod run-in function of all operable control rods following a scram (scram follow function).
- Automatic enforcement of rod movement blocks to prevent potentially undesirable rod movements. These rod blocks do not have an effect on the scram insertion function.
- Manual and automatic insertion of all control rods by an alternate and diverse method [alternate rod insertion (ARI) motor run-in function].
- The capability to enforce a pre-established sequence for control rod movement when reactor power is below the low power setpoint.
- The capability to enforce fuel operating thermal limits when reactor power is above the low power setpoint.
- The capability to provide for Selected Control Rod Run In (SCRRI) function for mitigating a loss of feedwater heating event or for reducing power after a load rejection event or a turbine trip (that does not result in scram).

The RC&IS is classified as a nonsafety-related system, only has a nonsafety-related control design basis, and is not required for the safe shutdown of the plant. A failure of the RC&IS does not result in gross fuel damage. However, the rod block function of RC&IS is used in limiting the effects of a rod withdrawal error, and prevention of local fuel operating thermal limits violations during normal plant operations. Therefore, the RC&IS is designed to be single-failure proof and highly reliable.

The RC&IS consists of several different types of cabinets (or panels), which contain special electronic/electrical equipment modules, and a dedicated operator interface on the main control panel in the MCR.

The RC&IS is a dual redundant system consisting of two independent channels for normal control rod position monitoring and control rod movements. The two channels receive the same but separate input signals and perform the same functions. For normal functions of the RC&IS, the two channels must always be in agreement and any disagreement between the two channels results in rod block. However, the protective function logic of the RC&IS (i.e., rod block) is designed such that the detection of a rod block condition in only one channel of RC&IS would result in a rod block.

In addition, the RC&IS includes a fiber-optic dual-channel multiplexing network that is used for transmission of rod position and status data from Remote Communication Cabinets (RCCs) to the Rod Action and Position Information (RAPI), and rod block/movement command from RAPI to RCCs. A summary description of each of the above functions is provided below.

Rod Action Control Subsystem (RACS):

The RACS consists of rod action and position information (RAPI) panels and Automated Thermal Limit Monitor (ATLM)/Rod Worth Minimizer (RWM) panel that provide for a dual redundant architecture. These panels are located in the back-panel area of the control room.

Remote Communication Cabinets (RCCs):

The RCCs contain a dual channel file control module (FCM) and several dual channel rod server modules (RSMs). The FCM interfaces with the RSMs and RAPI.

Induction Motor Controller Cabinets (IMCCs):

The IMCCs consist of induction motor control equipment required for turning on and off the AC power required for energizing the FMCRD 3-Phase AC induction motor and its associated motor built-in brake for performing FMCRD movements.

Rod Brake Controller Cabinets (RBCCs):

The RBCCs contain electrical power supplies, electronic (or relay) logic, and other associated electrical equipment for the proper operation of the FMCRD holding brakes. Signals for brake disengagement or engagement are received from the associated rod server modules. The brake controller logic provides two separate (Channel A and Channel B) brake status signals to the associated rod server module.

RC&IS Multiplexing Network

The RC&IS multiplexing network consists of two independent channels. Fiber-optic communication links are used in this multiplexing network to handle communication between the RACS and the dual channel file control modules located in the remote communication cabinets.

The plant Safety-Related Distributed Control and Information System (Q-DCIS) network interfaces with FMCRD dual redundant separation switches (A and B) and provides the appropriate status signals to the RACS cabinets. These signals are used in the RC&IS logic for initiating rod block signals if a separation occurs. The Q-DCIS provides these signals to the RC&IS via communication with the Nonsafety-Related DCIS (N-DCIS). The Q-DCIS and N-DCIS are not part of the RC&IS scope.

RC&IS Power Sources

RC&IS equipment derives its power from two different sources. The IMCCs and RBCCs receive their power from medium and low voltage AC power buses that are backed up by the plant standby diesel generators. All other RC&IS equipment derives power from two separate non-divisional AC power sources, at least one of which is an uninterruptible AC power supply (UPS).

1.2.2.2.2 Control Rod Drive System

The Control Rod Drive (CRD) system is composed of three major elements:

- the Fine Motion Control Rod Drive (FMCRD) mechanisms;
- the Hydraulic Control Unit (HCU) assemblies; and
- the Control Rod Drive Hydraulic subsystem.

The FMCRDs provide electric-motor-driven positioning for normal insertion and withdrawal of the control rods and hydraulic-powered rapid control rod insertion (scram) for abnormal operating conditions. Simultaneous with scram, the FMCRDs also provide electric-motor-driven run-in of all control rods as a path to rod insertion that is diverse from the hydraulic-powered

scram. The hydraulic power required for scram is provided by high-pressure water stored in the scram accumulator within the individual HCUs. Each HCU is designed to scram up to two FMCRDs. The HCUs also provide the flow path for purge water to the associated drives during normal operation. The CRD Hydraulic Subsystem supplies high pressure demineralized water, which is regulated and distributed to provide charging of the scram accumulators, purge water flow to the FMCRDs, and backup makeup water to the RPV when the feedwater flow is not available.

During power operation, the CRD system controls changes in core reactivity by movement and positioning of the neutron absorbing control rods within the core in fine increments via the FMCRD electric motors, which are operated in response to control signals from the RC&IS.

The CRD system provides rapid control rod insertion (scram) in response to manual or automatic signals from the Reactor Protection System (RPS), so that no fuel damage results from any plant transient.

The FMCRDs are mounted in housings welded into the RPV bottom head. Each FMCRD has a movable hollow piston tube that is coupled at its upper end, inside the reactor vessel, to the bottom of a control rod. The piston is designed such that it can be moved up or down, both in fine increments and continuously over its entire range, by a ball nut and ball screw driven by the electric motor. In response to a scram signal, the piston rapidly inserts the control rod into the core hydraulically using stored energy in the scram accumulator. The scram water is introduced into the drive through a scram inlet connection on the FMCRD housing, and is then discharged directly into the reactor vessel via clearances between FMCRD parts. The FMCRD scram time requirements are provided in the plant-specific Technical Specifications.

The FMCRD design includes an electro-mechanical brake on the motor drive shaft and a ball check valve at the point of connection with the scram inlet line. These features prevent control rod ejection in the event of a failure of the scram insert line. An internal housing support is provided to prevent ejection of the FMCRD and its attached control rod in the event of a housing failure. It uses the outer tube of the drive to provide support. The outer tube, which is welded to the drive middle flange, attaches by a bayonet lock to the base of the control rod guide tube. The flange at the top of the control rod guide tube contacts the core plate and prevents any downward movement of the drive.

The FMCRD is designed to detect separation of the control rod from the drive mechanism. Two redundant and separate safety-related switches detect separation of either the control rod from the hollow piston or the hollow piston from the ball nut. Actuation of either switch causes an immediate rod block and an alarm in the MCR, thereby preventing the occurrence of a rod drop accident. Consequently, a rod drop accident is not considered further for this design. (See Section 4.6.)

Each HCU provides sufficient volume of water stored at high pressure in a pre-charged scram accumulator to scram two FMCRDs at any reactor pressure. Each scram accumulator is connected to its associated FMCRDs by a hydraulic line that includes a normally closed scram valve. The scram valve opens by spring action but is normally held closed by pressurized control air. To cause scram, the RPS provides a de-energizing reactor trip signal to the solenoid-operated pilot valve that vents the control air from the scram valve. The system is “fail safe” in that loss of either electrical power to the solenoid pilot valve or loss of control air pressure

causes scram. The HCUs are housed in the Reactor Building at the basemat elevation. This is a Seismic Category I structure, and the HCUs are protected from external natural phenomena such as earthquakes, tornados, hurricanes and floods, as well as from internal postulated accident phenomena. In this area, the HCUs are not subject to conditions such as missiles, pipe whip, or discharging fluids.

The CRD Hydraulic subsystem design provides the pumps, valves, filters, instrumentation, and piping to supply the high-pressure water for charging the HCUs and purging the FMCRDs. Two 100% capacity pumps (one on standby) supply the HCUs with water from the condensate treatment system and/or condensate storage tank for charging the scram accumulators and for supplying FMCRD purge water. The CRD Hydraulic subsystem equipment is housed in the Seismic Category I portion of the Reactor Building to protect the system from floods, tornadoes, and other natural phenomena. The CRD Hydraulic subsystem also has the capability to provide makeup water to the RPV while at high pressure as long as AC power is available.

The CRD system includes MCR indication and alarms to allow for monitoring and control during design basis operational conditions, including system flows, temperatures and pressures, as well as valve position indication and pump on/off status. Safety-related pressure instrumentation is provided on the scram accumulator charging water header to monitor header performance. The pressure signals from this instrumentation are provided to the RPS, which initiates a scram if the header pressure degrades to a low-low pressure setpoint. This feature ensures the capability to scram and safely shut down the reactor before scram accumulator pressure can degrade to the level where scram performance is adversely affected following the loss of scram accumulator charging water header pressure.

Components of the system that are required for scram (FMCRDs, HCUs and scram piping), are classified Seismic Category I. The balance of the system equipment (pumps, valves, filters, piping, etc.) is classified as Seismic Category II, with the exception of the safety-related scram accumulator charging water header pressure instrumentation, which is Seismic Category I. The major CRD components and their design requirements are provided in Section 4.6.

The CRD system is separated both physically and electrically from the Standby Liquid Control (SLC) system.

1.2.2.2.3 Feedwater Control System

The Feedwater Control System accomplishes both RPV water level control and FW temperature control. RPV water level control is accomplished by manipulating the speed of the FW pumps. FW temperature control is accomplished by manipulating the heating steam flow to the seventh stage FW heaters or directing a portion of the FW flow around the high- pressure FW heaters. The two functions are performed by two sets of triple redundant controllers located in separate cabinets.

The Feedwater Control System (FWCS) provides logic for controlling the supply of feedwater flow to the reactor vessel in response to automatic or operator manual control signals. This control maintains reactor water level within predetermined limits for all operating conditions including startup. A fault-tolerant, triplicated, digital controller uses water level, steam flow and feedwater flow signals to form a three-element control strategy to accomplish this function. Single-element control based only on reactor water level is used when steam flow or feedwater

flow signals are not available. During very low steam flow conditions during plant startup, the FWCS regulates the Reactor Water Cleanup/Shutdown Cooling (RWCU/SDC) system overboard flow to maintain reactor water level and to minimize feedwater temperature oscillations.

FWCS equipment consists of Fault-Tolerant Digital Controllers (FTDC), which are triplicated, microprocessor based controllers that execute the control software and logic required for reactor level control and other FWCS functions. There are three identical processing channels (operating in parallel) that receive inputs from other systems and issue actuator and speed demands, process measurement data, interlock and trip signals. The FTDC issues actuator demand signals to the Low Flow Control Valve (LFCV) and the RWCU/SDC overboard flow control valve and a speed demand signal to the Feedwater Pump variable speed controllers, which are all components of other systems. The FWCS functions and modes are shown below.

Function	Modes
RPV water level control	Single Element (level only) Three Element (level, main steam flow, feedwater flow)
Variable speed feedwater pump speed demand	Manual Auto (speed control)
LFCV position demand	Manual Auto (level control)
RWCU/SDC Overboard Flow Control valve position demand	Manual Auto-level control
Automation	Power Generation and Control Subsystem (PGCS), of Plant Automation System, mode Not in PGCS mode

The FWCS does not perform or ensure any safety-related function, and thus, is classified as nonsafety-related.

Water levels in the RPV are defined in Figure 7.7-1. The normal range of reactor water level is between Level 4 and Level 7. If either of these limits is reached during normal operation, an alarm occurs in the control room to alert the operator.

For a loss of feedwater heating event that results in a significant decrease in feedwater temperature, the Nonsafety-Related Distributed Control and Information System (N-DCIS) generates a signal that initiates a Selected Control Rod Run-In (SCRRI). This interlock limits the consequences of a reactor power increase due to cold feedwater. In addition, the temperature difference between feedwater lines A and B is monitored and alarmed if found to be excessive.

If high water Level 8 is reached, a signal is generated to initiate runback of the feedwater demand to zero and trip the main turbine. This protects the turbine from excessive moisture carryover in the main steam. This interlock is implemented in a physically separate controller to ensure a trip function is available upon a common-mode failure of the FWCS FTDCs.

In the event of low water Level 3, a level setpoint setdown is initiated. This aids level control in pressurization events (e.g., main turbine trip with failure of bypass valves). The water level setpoint is set down by a predetermined amount after a time delay of predetermined length

following the low water level event. The level setpoint setdown function is reset after the level transient. This function decreases the incoming feedwater supply in order to avoid a high Level 8 trip from the resulting water level transient.

Upon receipt of an Anticipated Transient Without Scram (ATWS) trip signal from the ATWS logic cards of Safety System Logic and Control (SSLC) system, FWCS initiates a runback of feedwater pump feedwater demand to zero and closes the LFCV and the RWCU/SDC Overboard flow control valve. This reduces power and prevents dilution of the boron that would be injected to shut the reactor.

The total feedwater flow is displayed on the main control panel. The FWCS operating mode is selectable from the main control room. The FWCS microprocessors are located in the Control Building.

Digital controllers used for the FWCS are redundant, with diagnostic capabilities that identify and isolate failure of level input signals.

1.2.2.2.4 Standby Liquid Control System

The Standby Liquid Control (SLC) system provides an alternate method of reactor shutdown (i.e., without control rods) from full power to cold subcritical by the injection of a neutron absorbing solution into the RPV.

The SLC system interfaces with safety-related divisional power for the squib-type injection valves; for the valve which isolates the accumulator after injection; for accumulator solution level measurement, trip, and alarm functions; and for the particular NBS instrumentation and SSLC control logic which generates the ATWS signal for automatic SLC system initiation.

The SLC system has two independent 50% capacity trains, which include piping, valves, accumulator and instrumentation that can inject a neutron absorber solution into the reactor. The system is designed to operate over the range of reactor pressure conditions up to the elevated pressures of an ATWS event, and to inject sufficient neutron absorber solution to reach hot subcritical conditions after system initiation. The system is also credited with providing makeup water to the RPV during loss-of-coolant accident (LOCA) events.

Instrumentation is provided to the operator for monitoring the status of the SLC system, and for alarming any off standard condition.

1.2.2.2.5 Neutron Monitoring System

The Neutron Monitoring System (NMS) (described in Subsection 7.2.2) provides indication of neutron flux in the core in all modes of reactor operation. The safety-related NMS functions are the startup range neutron monitor (SRNM), the local power range monitor (LPRM), the average power range monitor (APRM), and the oscillation power range monitor (OPRM), the logic for which resides in the same hardware/software of the APRM. The nonsafety-related subsystems are the automated fixed in-core probe (AFIP) and the multi-channel rod block monitor (MRBM). The LPRMs and APRMs make up the power range neutron monitor (PRNM) subsystem. The safety-related portions of the NMS are classified as Seismic Category I.

The NMS provides signals to the RPS, the RC&IS, SSLC, N-DCIS and the Plant Automation System. The NMS provides trip signals to the RPS for reactor scram on rising excessive neutron flux or too short a period for flux generation.

The safety-related subsystems of NMS consist of four divisions that correspond and interface with those of the RPS. This independence and redundancy ensure that no single failure interferes with the system operation.

The SRNM subsystem is comprised of multiple SRNM channels that are divided into divisions, and independently assigned to bypass groups such that some of the SRNM channels are allowed to be bypassed at any time while still providing the required monitoring and protection capability.

The LPRM function of the PRNM subsystem is comprised of LPRM assemblies evenly distributed throughout the cross-section of the core. There are four LPRM detectors within each LPRM assembly, evenly spaced from near the bottom of the fuel region to near the top of the fuel region. These LPRM detectors are assigned to four sets of APRM detectors each. The signals from each set of LPRM detectors are assigned to one APRM channel, with these signals summed and averaged to form an APRM signal that represents the average core power. There are four divisions of APRM channels. Electrical and physical separation of the divisions is maintained and optimized to satisfy the safety-related system requirement. With the four divisions, redundancy criteria are met because a scram signal can still be initiated with a postulated single failure under allowed APRM bypass conditions.

The NMS instruments are primarily based on the digital measurement and control design practices that use digital design concepts. NMS instruments follow a modular design concept such that each modular unit or its subunit is replaceable upon repair service.

The SRNM subsystem covers the lower power range from the source range to 15% of rated reactor power. The PRNM subsystem overlaps the SRNM, covering the range from approximately 1% to 125% of rated reactor power.

The AFIP subsystem is comprised of sensors and their associated cables, as well as the signal processing electronic unit. The AFIP sensors are the gamma thermometer type. There are seven AFIP gamma thermometer sensors evenly distributed across each LPRM assembly, with one gamma thermometer installed next to each of the four LPRM detectors. The remaining three gamma thermometers are located midway between LPRM detector locations. The AFIP sensor cables are routed within the LPRM assembly and then out of the RPV through the LPRM assembly penetration to the vessel. The AFIP subsystem generates signals proportional to the axial power distribution at the radial core locations of the LPRM detector assemblies. The AFIP signal range is sufficiently wide to accommodate the corresponding local power range that covers from 1% to 125% of reactor rated power.

The AFIP gamma thermometer sensor has a very stable detector sensitivity that does not significantly change due to radiation exposure or other reactor conditions. The AFIP gamma thermometer can be calibrated by using a built-in calibration device inside the gamma thermometer/LPRM assembly. Due to its stable sensitivity and rugged hardware design, the AFIP sensor has a lifetime longer than that of the LPRM detectors. The AFIP sensors in an LPRM assembly are replaced together with the LPRM detectors when the whole LPRM assembly is replaced.

1.2.2.2.6 Remote Shutdown System

The Remote Shutdown System (RSS) provides the means to safely shut down the reactor from outside the main control room. The RSS provides remote manual control of the systems necessary to:

- achieve and maintain safe (hot) shutdown of the reactor after a scram;
- achieve subsequent stable shutdown of reactor;
- achieve subsequent cold shutdown of the reactor; and
- maintain safe conditions during shutdown.

The RSS is classified as a safety-related system. The RSS includes control interfaces with safety-related equipment.

1.2.2.2.7 Reactor Protection System

The Reactor Protection System (RPS) initiates an automatic and prompt reactor trip (scram) by means of rapid hydraulic insertion of all control rods whenever selected plant variables exceed preset limits. The primary function is to achieve a reactor shutdown before fuel damage occurs. The RPS also provides reactor status information to other systems, and causes one or more alarms in the MCR whenever selected plant variables exceed the preset limits.

The RPS is a four-division safety-related protection system, differing from a reactor control system or a power generation system. The RPS and its components are safety-related. The RPS and the system electrical equipment are classified as Seismic Category I.

RPS descriptions are provided within Subsection 7.2.1.

The RPS initiates reactor trip signals within individual sensor channels when any one or more of the conditions listed below exists during reactor operation. Reactor scram results on any of the following conditions in accordance with the system logic described below.

- Drywell pressure high;
- Reactor power (neutron flux or simulated thermal power) exceeds limit for operating mode;
- Reactor power rapid increase (short period);
- Reactor vessel pressure high;
- Reactor water level low (Level 3);
- Reactor water level high (Level 8);
- Main steam isolation valves closed (Run mode only);
- Scram accumulator charging water header pressure – low-low;
- Suppression pool temperature high;
- Turbine stop valve closure and insufficient turbine bypass available;
- Turbine control valve fast closure and insufficient turbine bypass available;

- Main condenser vacuum low;
- Loss of power to feedwater pumps (Run mode only);
- Operator-initiated manual scram; or
- Reactor mode switch in "Shutdown" position.

The RPS is a four division safety-related system that consists of instrument channels, trip logic, trip actuators, manual controls, and scram logic circuitry that initiates the rapid insertion of control rods by hydraulic force to scram the reactor when unsafe conditions are detected. The RPS equipment resides in the SSLC system to perform its functions.

The RPS is divided into four redundant divisions of sensor channels, trip logics, and trip actuators, and two divisions of manual scram controls and logic circuitry. Each division has a separate safety-related power supply taken from the safety-related Uninterruptible Power Supply (UPS) 120 VAC power supply. The automatic and manual scram initiation logic systems are independent of each other to initiate a reactor scram. The RPS design is such that, once a full reactor scram has been initiated automatically or manually, this scram condition seals-in such that the intended fast insertion of control rods into the reactor core continues to completion. After a time delay, the design requires the scram logic to be reset to untripped state manually.

The RPS scram logic circuits are arranged so that coincident trips in two of the four divisions (2-out-of-4 logic) of sensor channels and in two of the four trip system outputs to the actuating devices are required to initiate a scram. This arrangement permits a single failure in one division to occur without either causing a scram or preventing the other three divisions from causing a scram. For example, the single failure may be in either system logic or the individual power supply for that division.

Each logic division and its associated power supply is separated both physically and electrically from the other divisions. This arrangement permits one division at a time to be taken out of service (bypassed) for testing or repair during reactor operation. The other divisions then perform the RPS function with system logic in a 2-out-of-3 arrangement.

1.2.2.2.8 Plant Automation System

The Plant Automation System (PAS) is classified as a power generation system, is not required for safety, and thus, is classified as nonsafety-related. Events requiring control rod scram are sensed and controlled by the safety-related RPS, which is completely independent of PAS. PAS provides the capability for supervisory control of the entire plant by supplying setpoint commands to independent nonsafety-related automatic control systems as changing load demands and plant conditions dictate.

PAS provides supervisory control of reactor power during reactor startup, power generation and reactor shutdown by appropriate commands to change rod positions. PAS also controls the pressure setpoint or turbine bypass valve position during reactor heatup and depressurization (e.g., to control the reactor cooldown rate). PAS issues supervisory setpoints commands to sub-loops of various secondary plant systems. PAS consists of redundant process controllers. The automation process is divided into phases corresponding to plant start-up, shutdown, and normal power generation. Each phase is then divided into several break-points or logical steps in plant operation. Automation proceeds under PAS control until the end of a break-point division

is reached, at which time the operator must confirm that conditions are acceptable before automation sequence can continue.

PAS controls the overall plant startup, power operation, and shutdown functions under operator break-point control. PAS receives input from the Neutron Monitoring System, the N-DCIS, the Steam Bypass and Pressure Control system, and the operator's control console. The output demand signals from PAS are sent to the RC&IS to position the control rods, and to the Steam Bypass and Pressure Control system for automatic load following operations.

PAS control functional logic is performed by redundant, microprocessor-based fault-tolerant digital controllers (FTDCs). Each FTDC performs many functions. It reads and validates inputs from the N-DCIS. It performs the specific power control calculations, processes the pertinent alarm and interlock functions, and then updates all system outputs to the N-DCIS. To prevent computational divergence among the redundant processing channels, each channel performs a comparison check of its calculated results with other redundant channels. The internal FTDC architecture features redundant multiplexing interfacing units for communications between the N-DCIS and the FTDC processing channels.

If any system or component condition is abnormal during execution of the prescribed sequences of operation, PAS automatically switches into the manual mode, and the operator can manipulate control rods and manage the plant using the normal controls. A failure of PAS does not prevent manual control of the reactor, nor does it prevent safe shutdown of the reactor.

PAS digital controllers are powered by redundant uninterruptible nonsafety-related power sources. No single power failure results in the loss of any PAS function.

1.2.2.2.9 Steam Bypass and Pressure Control System

The Steam Bypass and Pressure Control (SB&PC) system controls reactor pressure during plant startup, power generation, and shutdown modes of operation. This is accomplished through control of the turbine control valves and turbine bypass valves, such that susceptibility to reactor trip, turbine-generator trip, main steamline isolation and safety relief valve opening is minimized. Triplicated fault tolerant digital controllers using feedback signals from reactor vessel dome pressure sensors generate command signals for the turbine bypass valves and pressure regulation demand signals used by the Turbine Generator Control System (TGCS) to generate demand signals for the turbine control valves. For normal operation, the main turbine control valves regulate reactor pressure. However, whenever the total steam flow demand from the SB&PC system exceeds the effective turbine control valve steam flow demand, the SB&PC system sends the excess steam flow directly to the main condenser through the turbine bypass valves.

Ability of the plant to load-follow the grid-system demands is accomplished by the aid of a combination of control rod actions and feedwater temperature changes. In response to the resulting steam production demand changes, the Steam Bypass and Pressure Control (SB&PC) system adjusts the demand signals sent to the TGCS so that the TGCS adjusts the turbine control valves to accept the control steam output change, thereby controlling pressure.

Controls and valves are designed such that steam flow is shut off upon complete loss of control system electrical power or hydraulic system pressure.

1.2.2.2.10 Distributed Control and Information System

The Distributed Control and Information System (DCIS) is composed of two separate systems: Nonsafety-Related DCIS (N-DCIS) and Safety-Related DCIS (Q-DCIS).

1.2.2.2.10.1 Nonsafety-Related Distributed Control and Information System

The Nonsafety-Related DCIS (N-DCIS) is the data communication method for all control systems, and certain individual control functions, that are not part of safety-related control systems. The N-DCIS equipment is based upon fiber optics communications technology and computer controls. The system transfers data between control system equipment and the main control room. The N-DCIS also includes network gateways, which allow the transfer of data between discrete data highway systems. All interconnections use fiber optic data links.

1.2.2.2.10.2 Safety-Related Distributed Control and Information System

The Safety-Related Distributed Control and Information System (Q-DCIS) provides redundant data communications networks to support the monitoring and control of interfacing safety-related control and instrumentation systems. The system includes electrical devices and circuitry that connect field sensors, display devices, controllers, power supplies, and actuators, which are part of these safety-related systems. The Q-DCIS also includes any associated data acquisition and communications software, if required, to support its distribution function of data and control. The system processes data from safety-related systems and safety-related trip or initiation data strictly through Q-DCIS, while nonsafety-related data is processed through the N-DCIS.

The Q-DCIS replaces most of the conventional, long-length, copper-conductor cables with a dual-redundant, fiber optic, data network to reduce the cost and complexity of cable runs within separate divisions that connect components of the plant protection and safety systems. The Q-DCIS provides an electrically noise-free transmission path for plant sensor data and safety system control signals.

1.2.2.2.11 Leak Detection and Isolation System

The Leak Detection and Isolation System (LD&IS) detects and monitors leakage from the containment, preventing the release of radiological leakage from the reactor coolant boundary to the environment. The system initiates safety-related isolation functions by closure of inboard and outboard containment isolation valves.

The following functions are supported by the LD&IS:

- Containment isolation following a loss-of-coolant accident event;
- Main steamline isolation;
- Isolation condenser system process lines isolation;
- Reactor Water Cleanup/Shutdown Cooling system process lines isolation;
- Fuel and Auxiliary Pools Cooling System process lines isolation;
- Chilled Water System lines to drywell coolers isolation;
- Isolation of liquid drain lines for drywell sumps;

- Containment purge and vent lines isolation;
- Reactor building Heating, Ventilation and Air Conditioning (HVAC) air exhaust ducts isolation;
- Fission products sampling line isolation;
- Monitoring of identified and unidentified leakages in the drywell;
- Monitoring of condensate flow from the drywell air coolers; and
- Monitoring of the vessel head flange seal leakage.

The following leakage detection functions are provided by other plant systems:

- Monitoring of fission products in the drywell;
- Monitoring of plant sump levels and flow rates; and
- Monitoring of safety valve and safety relief valve steam discharge and/or leakage.

The LD&IS monitors plant parameters such as flow, temperature, pressure, and water level, which are used to alarm and initiate the isolation functions.

At least two parameters are monitored for an isolation function. The signal parameters are processed by the Safety System Logic and Control (SSLC) system, which generates the trip signals for initiation of isolation functions.

The LD&IS safety-related functions have four divisional channels of sensors for each parameter. Two-out-of-four coincidence voting within a channel is required for initiation of the isolation function. The control and decision logic are of fail-safe design, which ensures isolation on loss of power. The logic is energized at all times and de-energizes to trip for isolation functions.

Loss of one divisional power or one monitoring channel does not cause inadvertent isolation of the containment. Different divisional isolation signals are provided to the inboard and outboard isolation valves.

The LD&IS is designed to allow periodic testing of each channel to verify that it is capable of performing its intended function.

The safety-related portions of the LD&IS are classified Seismic Category I.

The LD&IS initiates isolation functions automatically. All isolation valves have individual manual control switches and valve position indication in the MCR. However, the isolation signal overrides any manual control to open the isolation valves.

Manual control switches in the control logic provide a backup to automatic initiation of isolation as well as capability for reset, bypass and test of functions.

Even though they are not subject to the same requirements that are associated with the containment isolation functions of LD&IS, two safety-related process isolation functions have been included within the LD&IS. This is done because LD&IS already has access to most of the necessary parameters for initiating these isolation functions. For certain LOCA events, the main feedwater system and the high pressure CRD system flow need to be isolated to ensure that containment pressure remains within design limits. These isolation functions can be manually

bypassed in situations where nonsafety-related containment cooling systems are available to control containment pressure. Additional details are provided in Subsection 7.3.3.

The monitored plant parameters are measured and recorded by the N-DCIS, and are displayed on demand. The abnormal indications and initiated isolation functions are alarmed in the MCR.

1.2.2.2.12 Safety System Logic and Control System

The Safety System Logic and Control (SSLC) system is the decision-making control logic segment of the automatic reactor protection and engineered safety features systems. SSLC processes automatic and manual demands for reactor trip (scram), nuclear system isolation, and engineered safety features actuation based upon sensed plant process parameters or operator request.

SSLC permits the above safety-related systems to provide protective action by implementing the protection logic functions of these safety-related systems. SSLC runs without interruption in all modes of plant operation to support the required safety-related functions.

The SSLC system includes the logic of the reactor protection system (RPS), main steam line isolation valve closure, leak detection and isolation system (LD&IS), and the initiation of the Standby Liquid Control (SLC) system associated with anticipated transient without scram (ATWS). The SSLC also includes the safety-related logic functions of engineered safety feature (ESF) functions. SSLC logic for ESF does not require operator intervention during normal operation.

The SSLC system is configured as a four-division data acquisition and control system, with each division containing an independent set of microprocessor-based, software-controlled logic processors. The four divisions exchange data via fiber optic data links to implement cross-channel data comparison.

The SSLC system acquires data from redundant sets of sensors of the interfacing safety-related systems and provides control outputs to the final component actuators. Data is received from the Q-DCIS or directly hardwired from transmitters or sensors.

1.2.2.2.13 Diverse Instrumentation and Controls

Diverse instrumentation and controls are provided for the features addressed in Branch Technical Position (BTP) HICB-19 (1997) and Regulatory Guide 1.152. The diverse instrumentation and controls address concerns about common cause failures in software-based Reactor Protection System (RPS) and Engineered Safety Features (ESF) systems. The BTP requires a diverse system to ensure proper operation of RPS and ESF functions in the event of a common cause type failure of the primary protection systems.

The diverse instrumentation and controls consist of three components, which address the diverse protection functions, as follows:

(1) A set of protection logics that provide diverse means to scram the reactor via control rod insertion using separate and independent hardware and software from the primary RPS.

(2) A set of ESF initiation logics that provide diverse means to initiate the ESF functions using separate and independent hardware and software from the primary ESF systems.

(3) A set of alternate rod insertion (ARI) and associated logic (e.g., control rod run-in) via control rod insertion through alternate means by opening the three sets of ARI valves of the control rod drive system.

The ARI logic of (3) is part of the ATWS Mitigation Logic function.

Backup of Reactor Protection System Functions:

A set of diverse logic, using separate and independent hardware and software to scram the reactor via control rod insertion, is included in the diverse instrumentation and controls. For the ESBWR, it is sufficient to include a subset of the existing RPS scram logic functions in the diverse instrumentation and controls to ensure acceptable diverse protection results. This set of diverse protection logic for reactor scram, combined with other diverse backup scram protection and diverse ESF functions, provide the necessary diverse functions to meet the required design position called out in the BTP HICB-19. The following scram signals are included in the diverse instrumentation and controls:

- High Reactor Pressure;
- High Reactor Water Level (Level 8);
- Low Reactor Water Level (Level 3);
- High Drywell Pressure; and
- High Suppression Pool Temperature.

This diverse set of RPS scram logic resides in independent and separate hardware and software equipment from the primary RPS. The process variables sensors that provide input to this diverse set of logic use different sets of sensors from those used in the primary RPS. The diverse logic equipment is nonsafety-related with triple redundant channels. The power sources of this diverse equipment are from the nonsafety-related load groups. The scram initiation logic is "energize to actuate." The trip logic is based on 2-out-of-3 voting.

Backup of Engineered Safety Feature Functions:

The ESBWR has several ESF functions, including the Gravity-Driven Cooling System (GDCS), Isolation Condenser System (ICS), Standby Liquid Control (SLC) system, and Automatic Depressurization System (ADS) function using safety relief valves (SRVs) and (if needed) depressurization valves (DPVs). To provide adequate diverse vessel depressurization and core cooling functions, the diverse instrumentation and controls include initiation logic for GDCS, SRVs and DPVs that is diverse from the primary ESF function logic. This set of diverse logic for ESF function initiation, combined with other diverse backup scram protection and selected diverse RPS logic, provides the necessary diverse functions to meet the required design position called out in the BTP HICB-19.

This set of diverse ESF logic resides in separate and independent hardware and software equipment from the primary ESF systems. The process variables sensors that provide inputs to this diverse set of logic use different sets of sensors from those used in the primary ESF systems. The diverse logic equipment is nonsafety-related with triple redundant channels. The diverse equipment power source is nonsafety-related. The initiation logic is "energize to actuate" similar to the primary ESF. The trip logic is based on 2-out-of-3 voting.

Backup of ARI and Associated Functions:

The diverse instrumentation and controls include the nonsafety-related alternate rod insertion (ARI) logic for reactor scram, which is also considered as part of ATWS mitigation logic. This logic generates the following signals to support the mitigation of an ATWS event:

- A signal to open the three sets of ARI valves in the Control Rod Drive (CRD) system on a high reactor vessel pressure signal, a low reactor water level signal, or a manual ATWS initiation signal.
- A signal to the Rod Control and Information System (RC&IS) to initiate electrical insertion of all operable control rods on a high reactor vessel pressure signal, a low reactor water level signal, or a manual ATWS initiation signal.

ARI/FMCRD Run-In logic resides in the nonsafety-related diverse instrumentation and controls as a triple channel system, powered by nonsafety-related load group power sources.

1.2.2.3 Radiation Monitoring Systems

1.2.2.3.1 Process Radiation Monitoring System

The Process Radiation Monitoring System (PRMS) measures and provides for display of radioactivity levels in process and effluent gaseous and liquid streams, initiates protective actions, and activates alarms in the Main Control Room (MCR) on high radiation signals. The PRMS provides radiological monitoring during plant operation and following an accident. Subsystems of the PRMS consist primarily of Radiation Detection Assemblies, off-line liquid and gaseous sampling panels/skids, in-line sample chambers and Signal Conditioning Units. The PRMS consists of independent subsystems, each of which contains between one and eight monitoring channels. The PRMS safety-related channel trip signals provide inputs for generation of protective action signals.

The primary functions of the PRMS are to:

- Monitor the various gaseous and liquid process streams and effluent releases and provide main control room display, recording and alarm capability;
- Initiate alarms in the main control room to warn operating personnel of high radiation activity; and
- Initiate the appropriate actions and controls to prevent further radioactivity releases to the environment.

The PRMS provides instrumentation for radiological monitoring, sampling and analysis of identified process and effluents streams throughout the plant. The process and effluent paths and/or areas listed below are monitored for potential high radioactivity releases. The radiation monitors of the first five items are safety-related instrumentation, while the remainder of the PRMS monitors are nonsafety-related.

- The Reactor Building HVAC Exhaust Vent Radiation Monitoring Subsystem continuously monitors the gross gamma quantity of radioactivity being exhausted via this Exhaust duct and the Refueling Area Air Exhaust duct. The discharge point from the duct is monitored with four physically and electrically independent and redundant

divisions. In the event of radioactive releases due to system failures in the Reactor Building, or due to a fuel handling accident, the Reactor Building HVAC exhaust fans are stopped.

- The Control Room Habitability Area HVAC Radiation Monitoring Subsystem consists of four channels for the air intake and four channels for each of the two Emergency Filter Unit (EFU) outlets. Four divisonalized Radiation Detection Assemblies are mounted external to the ventilation intake duct for the Control Room air intake and four divisionalized Radiation Detection Assemblies are mounted external to each of the two EFU outlet ducts. The Radiation Detection Assemblies continuously monitor the gamma radiation levels from each air intake plenum or EFU outlet duct for the building or area containing the MCR and auxiliary rooms. The Control Room outside air intake is secured in the event of a high radiation levels in order to protect the operating staff. The in-service EFU is automatically swapped to the standby EFU in the event of high radiation levels in the EFU outlet.
- The Isolation Condenser Vent Discharge Radiation Monitoring Subsystem continuously monitors the four Isolation Condenser Discharge Vents for gross gamma radiation by sixteen local detectors (four per isolation condenser vent). High radiation in the exhaust of a vent results in isolation of the affected Isolation Condenser loop.
- The Refuel Handling Area Air Exhaust Radiation Monitoring Subsystem continuously monitors gamma radiation levels in the exhaust plenum of the HVAC exhaust ducts in the Refuel Handling Area of the Reactor Building with four divisions of Radiation Detection Assemblies and channels. In the event of a radioactive release due to an accident while handling spent fuel, the Reactor Building HVAC exhaust fans are tripped off.
- The Fuel Building Main Area HVAC Radiation Monitoring Subsystem consists of four channels that monitor the gamma radiation level of the air exiting the spent fuel pool and associated fuel handling areas as well as the rooms with the fuel pool cooling and cleanup equipment. In the event of radioactive releases due to an accident while handling spent fuel, Fuel Building HVAC exhaust fans are stopped.
- The Drywell Sump LCW/HCW Discharge Radiation Monitoring Subsystem continuously monitors gamma radiation levels in the transfer pipes from the Drywell Low Conductivity Waste (LCW) and High Conductivity Waste (HCW) sumps to the Radwaste System. The two locations monitored are downstream of the Drywell LCW sump discharge pipe isolation valve and downstream of the Drywell HCW sump discharge isolation valve. Automatic trip of the two sump pumps occurs if high radiation levels are detected during liquid waste transfers.
- The Main Steamline (MSL) Radiation Monitoring Subsystem continuously monitors the gamma radiation level of the main steamlines in the MSL tunnel area for high gross gamma radioactivity in the steam flow to the turbine. The subsystem provides input to logic that results in shutdown of the main turbine condenser mechanical vacuum pump (MVP) and MVP valve closure.
- The Offgas Pre-Treatment sampling Radiation Monitoring Subsystem has a single channel. The subsystem samples the Offgas stream at the discharge from the Offgas

cooler and condenser. Typically, the first indication of a fuel failure is detected by this subsystem.

- The Offgas Post-Treatment Radiation Monitoring Subsystem monitors the release of radiation at the discharge from the Offgas System, after the process stream has passed through the charcoal hold-up system. The subsystem consists of two independent skids and a gas sampler. The subsystem is equipped with a flow controller capable of continuously measuring the mass flows of both the main process and the sample and automatically maintaining the sample flow proportional to the process flow.
- The Charcoal Vault Ventilation Exhaust Radiation Monitoring Subsystem, consisting of one channel, monitors the radioactivity exhausting in the ventilation air from the charcoal vault.
- The Turbine Building HVAC Radiation Monitoring Subsystem consists of three subsystems. Both of the first two subsystems, the Turbine Building Normal Ventilation Exhaust and the Turbine Building Compartment Area Exhaust, consist of two non-divisional channels each, continuously monitoring the air flow through the exhaust ducts from the Turbine Building, prior to combining with other flows to the Turbine Building Ventilation Vent, for radioactivity. The third subsystem, Turbine Building Exhaust channel is composed of a local sample panel that monitors gaseous, halogen and particulate radiation levels. The panel has provision for monitoring tritium.
- The Main Turbine Gland Seal Steam Condenser Exhaust Radiation Monitoring Subsystem continuously monitors the gland seal steam offgas, discharged into the Turbine Building Ventilation System, for radioactive noble gases. A sampler, similar to the offgas post-treatment radiation monitor sampler, is capable of grabbing gaseous samples.
- The Radwaste Building Ventilation Exhaust Radiation Monitoring Subsystem continuously monitors halogens, particulates and noble gas releases from the Radwaste Building vent to the atmosphere for both normal and accident conditions.
- The Liquid Radwaste Discharge Radiation Monitoring Subsystem, consisting of a single channel, continuously monitors the gross gamma radiation level in the liquid effluent stream. The Liquid Radwaste Discharge Radiation Monitoring Subsystem initiates the closure of the Radwaste Discharge system isolation valves on high radiation level. A sampling skid is provided.
- The Drywell Fission Product Radiation Monitoring Subsystem consists of two channels that monitor the drywell air space radiation levels for leakage detection. The Drywell Fission Product RMS monitors a continuous sample, extracted from the drywell, for the presence of radioactive particulates and noble gases. The subsystem aids in meeting the detection requirements for reactor coolant leakage. The subsystem includes local sampling panels and a signal conditioner connected to each radiation detector assembly.
- The Reactor Component Cooling Water System (RCCWS) Intersystem Leakage Radiation Monitoring Subsystem consists of two channels. These channels monitor for gross radiation levels that are indicative of leakage through the heat exchangers in the RCCWS.

- A single channel radiation monitor continuously monitors the Technical Support Center Ventilation intake duct. Upon detection of radioactivity at the outside air intake, the Air Handling Unit outdoor air damper is closed and a filter train fan is started.
- The Fuel Building Ventilation Exhaust Air Handling Unit Radiation Monitoring Subsystem consists of four channels that monitor the radiation level of the air entering the Fuel Building Ventilation unit area exhaust Air Handling Units.
- The Fuel Building Combined Ventilation Exhaust Radiation Monitoring Subsystem continuously monitors halogens, particulates and noble gases releases from the Fuel Building Vent to the Fuel/Reactor Building stack for both normal and accident conditions.
- Separate radiation monitoring subsystems are provided for the Reactor Building/Fuel Building, Turbine Building and Radwaste Building stacks to monitor particulate, iodine and gaseous concentrations in the stack effluent for both normal and accident plant conditions. These stack monitoring subsystems are composed of three sampling channels that are designed to meet the requirements of both 10 CFR 20 for low level effluent releases and Regulatory Guide 1.97 for accident effluent releases. Provisions for monitoring tritium are also provided.

1.2.2.3.2 Area Radiation Monitoring System

The Area Radiation Monitoring System (ARMS) continuously monitors the gamma radiation levels within various key areas throughout the plant and provides an early warning to operating personnel when high radiation levels are detected so the appropriate action can be taken to minimize occupational exposure.

The ARMS consists of a number of channels, each consisting of a Radiation Detection Assembly and a Signal Conditioning Unit. When required, a local Auxiliary Unit with a display and audible alarm is also provided. Each ARMS radiation channel has two independently adjustable trip alarm circuits. One circuit is set to trip on high radiation and the other is set to trip on downscale indication (loss of sensor input). ARMS alarms in both the MCR and at plant local areas. Each ARMS Signal Conditioning Unit is equipped with a test feature that monitors for gross failures and activates an alarm on loss of power or when a failure is detected.

This system is nonsafety-related. The radiation monitors are powered from the nonsafety-related 120 VAC sources.

The trip alarm setpoints are established in the field following equipment installation at the site. The exact settings are based on sensor location, background radiation levels, expected radiation levels, and low occupational radiation exposures.

1.2.2.4 Core Cooling Systems Used For Abnormal Events

1.2.2.4.1 Isolation Condenser System

The Isolation Condenser System (ICS) removes decay heat after any reactor isolation during power operations. Decay heat removal limits further pressure rise and keeps the RPV pressure below the SRV pressure setpoint. It consists of four independent trains, each containing a heat exchanger that condenses steam on the tube side and transfers heat by heating/evaporating water

in the Isolation Condenser/Passive Containment Cooling System (IC/PCCS) pools, which are vented to the atmosphere.

The ICS is initiated automatically on a high reactor pressure, MSIV closure or a low water level signal. To start an IC into operation, a condensate return valve and condensate return bypass valve are opened, whereupon the standing condensate drains into the reactor and the steam-water interface in the IC tube bundle moves downward below the lower headers to a point in the main condensate return line. The ICS can also be initiated manually from the MCR. A fail-open nitrogen piston-operated condensate return bypass valve is provided for each IC, which opens if power is lost, or on a low reactor water level signal.

An in-line vessel is located on the condensate return line, downstream of the nitrogen motor operated valve. The in-line vessel is located on each ICS train to provide additional condensate volume for the RPV.

The ICS is isolated automatically when either a high radiation level or excess flow is detected in the steam supply line or condensate return line.

The Equipment Storage Pool and Reactor Well are designed to have sufficient water volume to provide makeup water to the IC/PCCS expansion pools for the initial 72 hours of a LOCA. This water is supplied via ICS pool cross-connect valves that open on a low level condition in either IC/PCCS inner expansion pool.

The IC/PCCS pool is divided into subcompartments that are interconnected at their lower ends to provide full use of the water inventory for heat removal by any IC. The Fuel and Auxiliary Pools Cooling System (FAPCS) performs cooling and cleanup of IC/PCCS pool water. During IC operation, IC/PCCS pool water can boil, and the steam produced is vented to the atmosphere. This boil-off action of non-radioactive water is a safe means for removing and rejecting all reactor decay heat.

The IC/PCCS pool has an installed capacity that provides at least 72 hours of reactor decay heat removal capability. The heat rejection process can be continued indefinitely by replenishing the IC/PCCS pool inventory. A safety-related FAPCS makeup line is provided to convey emergency makeup water into the IC/PCCS expansion pool from the Fire Protection System or from a valve connection point in the yard area just outside of the reactor building. The flow path for this makeup can be established independent of FAPCS operation, simply by manually opening the isolation valve on the FAPCS makeup line located at grade level in the yard area external to the reactor building.

The ICS passively removes heat from the reactor (i.e., heat transfer from the IC tubes to the surrounding IC/PCCS pool water is accomplished by natural convection, and no forced circulation equipment is required) when the normal heat removal system is unavailable following any of the following events:

- Sudden reactor isolation at power operating conditions;
- During station blackout (i.e., unavailability of all AC power);
- Anticipated Transient Without Scram (ATWS); and
- Loss-of-Coolant Accident (LOCA).

The ICs are sized to remove post-reactor isolation decay heat with 3 of 4 ICs operating and to reduce reactor pressure and temperature to safe shutdown conditions, with occasional venting of radiolytically generated noncondensable gases to the suppression pool. The heat exchangers (ICs) are independent of station AC power and function whenever normal heat removal systems are unavailable to maintain reactor pressure and temperature below limits.

The portions of the ICS (including isolation valves), which are located inside the containment and on the steam lines out to the IC flow restrictors, are designed to ASME Code Section III, Class 1, Quality Group A. Other portions of the ICS are ASME Code Section III, Class 2, Quality Group B. The IC/PCCS pools are safety-related and Seismic Category I.

The control room operators can perform periodic surveillance testing of the ICS valves via manual switches that actuate the isolation valves and the condensate return valves. Status indicators on the valves verify the opening and closure of the valves.

The safety-related monitored parameters for the IC/PCCS pools are pool water level and pool radiation. IC/PCCS pool water level monitoring is a function of the FAPCS, which is addressed in Subsections 1.2.2.6.2 and 9.1.3. IC/PCCS pool radiation monitoring is a function of the PRMS, which is addressed in Subsection 1.2.2.3.1 and Section 11.5.

1.2.2.4.2 Emergency Core Cooling System — Gravity-Driven Cooling System

Emergency core cooling is provided by the Gravity-Driven Cooling System (GDCS) in conjunction with the ADS in case of a LOCA. When an initiation signal is received, the ADS depressurizes the reactor vessel and the GDCS injects sufficient cooling water to maintain the fuel cladding temperatures below temperature limits defined in 10 CFR 50.46.

In the event of a severe accident that results in a core melt with the molten core in the lower drywell region, GDCS floods the lower drywell cavity region with the water inventory of the three GDCS pools and the suppression pool.

The GDCS is an engineered safety feature (ESF) system. It is classified as safety-related and Seismic Category I. GDCS instrumentation and DC power supply are safety-related.

Basic system parameters are:

- Three independent subsystems
  - Short-term cooling (injection)
  - Long-term cooling (equalization)
  - Deluge (drywell flooding)
- Initiation signal: see Subsection 7.3.1
- A time delay between initiation and actuation for short-term water injection
- A time delay between initiation and actuation for long-term water injection
  - Permissive: Interlocked to RPV water level
- Deluge system initiated on high lower drywell floor temperature

- Squib valve firing logic is normally 2-out-of-4, but reverts to 2-out-of-3 logic and ignores the bypassed division when the division of sensors bypass is operated
- Manual actuation:
  - Two channels
  - Permissive: Interlocked to RPV low pressure signal for short- and long-term cooling subsystems
  - Logic is simultaneous operation of two switches of the same division
- Monitored parameters:
  - GDCS Pool water level
  - GDCS valve positions

The GDCS injects water into the downcomer annulus region of the reactor after a LOCA and reactor vessel depressurization. It provides short-term gravity-driven water makeup from three separate water pools located within the upper drywell at an elevation above the active core region. The system also provides long-term post-LOCA makeup from the suppression pool to meet long-term core decay heat boil-off requirements. Following any initiating event that progresses to severe accident conditions, the system floods the lower drywell region with water if the core melts through the RPV.

The GDCS is completely automatic in actuation and operation. A backup to automatic actuation is the ability to actuate by operator action.

The GDCS consists of four identical trains completely independent of each other both electrically and mechanically, with the exception of two trains sharing one of the GDCS pools. A confirmed low RPV water level signal is the primary means by which the ADS is actuated to reduce RPV pressure. Additional details about the actuation logic are provided in Section 7.3.1. Simultaneously, short-term and long-term system timers in the GDCS logic start, which, after time-out and satisfying permissive conditions, actuate squib valves providing an open flow path from the respective water sources (GDCS pools and suppression pool, respectively) to the vessel.

The short-term system supplies gravity-driven flow to eight separate nozzles on the vessel with suction flow from the three separate GDCS pools. The long-term system supplies gravity-driven flow to four other nozzles with suction flow from the suppression pool through equalizing lines.

Both the short-term and long-term systems are designed to ensure that adequate reactor vessel inventory is provided assuming a LOCA in one GDCS line and failure of one GDCS injection (squib) valve to actuate in a separate GDCS train.

GDCS deluge lines, each having one squib actuated valve, provide a means of flooding the lower drywell cavity in the event of a core melt sequence which causes failure of the lower vessel head and allows molten fuel to reach the lower drywell cavity floor. These squib-activated valves are driven by logic receiving input signals from an array of temperature sensors located in the lower drywell.

GDCS pool level is the only safety-related system parameter that must be monitored in the main control room to verify system readiness and its proper function following initiation. Low level alarm instrumentation is included as part of GDCS.

1.2.2.5 Reactor Servicing Equipment

1.2.2.5.1 Fuel Service Equipment

The refueling and fuel-handling platforms are also included and are outlined in Subsection 1.2.2.5.5. Fuel servicing tools and equipment are not safety-related.

Fuel Preparation Machine

Two fuel preparation machines are mounted against the wall of the spent fuel storage pool. They have two primary uses. They are used to lower new fuel into the pool after the fuel has been inspected in the new fuel inspection stand and are used to inspect spent fuel when submerged in the storage pool and to aid in reconstitution of fuel found to be defective.

New Fuel Inspection Stand

The new fuel inspection stand is mounted in a pit on the refueling floor of the Fuel Building. The pit allows inspection of two fuel bundles over their full length. Channeling is also performed with the aid of the channel handling tool.

Channel Bolt Wrench

The channel bolt wrench is a long handled socket-end wrench used in the assembly or disassembly of the channel from the fuel bundle, by insertion or removal of the attaching bolt, while channeling or de-channeling fuel or reconstituting spent fuel in the fuel preparation machine.

Channel Handling Tool

The channel handling tool is a long handled clamping tool used to engage the channel for removal. It is manually operated and suspended from the channel handling boom that is located on the refueling floor of the fuel building adjacent to the fuel preparation machine.

General Purpose Grapple

The general purpose grapple is primarily for use in handling fuel or other light-weight components with a handle configuration approximating a fuel bail.

1.2.2.5.2 Miscellaneous Service Equipment

This equipment is generally used independently of other servicing equipment. Equipment requirements are that they operate underwater. The equipment is designed to be quickly decontaminated and can be stored with a minimum of effort by plant personnel. Typical service equipment includes:

Underwater Lights

Three types of lights are used: a general area light, a local area light, and a drop-type light.

Viewing Aids

Three types of viewing aids are used. A floating type viewing aid is the simplest. Another aid features an underwater viewing tube with a telescope. The last is an underwater, remotely controlled television camera with an internal light source.

Underwater Vacuum Cleaner

The underwater vacuum cleaner is used to clean any pool floor underwater and is remotely serviceable while submerged.

1.2.2.5.3 Reactor Pressure Vessel Servicing Equipment

These tools are used when the reactor is shut down and the RPV head is being removed or installed. Tools used typically consist of strongbacks, nut racks, stud tensioners, protectors, wrenches, etc. Lifting tools are designed for a safety factor of 10 or better with respect to the ultimate strength of the material used. Tools are designed for a 60-year life in the working environment.

1.2.2.5.4 RPV Internals Servicing Equipment

Instrument Strongback

The instrument strongback is used to aid in handling and replacement of Local Power Range Monitor (LPRM) and Startup Range Neutron Monitor (SRNM) dry tubes, in conjunction with support from the instrument handling tool.

Instrument Handling Tool

The instrument handling tool is connected to the wire terminal of the auxiliary hoist of the refueling platform and receives LPRMs or dry tubes from the strongback.

1.2.2.5.5 Refueling Equipment

The Reactor Building is supplied with a refueling machine for fuel movement and servicing the RPV.

Refueling Machine

The refueling machine is a gantry-type crane that spans the reactor vessel cavity and the buffer pool to handle fuel and perform other ancillary tasks in the Reactor Building. It is equipped with a traversing trolley on which is mounted a telescoping mast and integral fuel grapple. An auxiliary hoist is also provided. The machine is a rigid structure built to precise engineering standards to ensure accurate and repeatable positioning during the refueling process.

The refueling machine is classified as nonsafety-related, but designed as Seismic Category I.

The refueling machine is designed for automatic operation by a programmed computer located on the refueling machine. A position indicating system and travel limit computer are provided to locate the grapple over the vessel core and prevent collision with pool obstacles. The computer can control all direct refueling machine movements to any selected core location through the established XYZ coordinate system.

The mast grapple has a redundant load path (i.e., two independent 100% load support mechanisms) so that no single component failure results in a fuel bundle drop. Interlocks on the machine:

- Prevent hoisting a fuel bundle over the vessel unless an all-control-rods-in permissive is present;

- Limit vertical travel of the fuel grapple to provide shielding over the grappled fuel during transit; and
- Prevent lifting of fuel without grapple hook engagement and load engagement.

Fuel Handling Platform

The fuel handling platform is only used for fuel servicing and transporting tasks in the Fuel Building. It is equipped with a traversing trolley on which is mounted a telescoping mast and integral fuel grapple. An auxiliary hoist is also provided. The machine is a rigid structure built to precise engineering standards to ensure accurate and repeatable positioning while handling fuel.

The fuel handling machine is classified as nonsafety-related, but designed as Seismic Category I.

A position indicating system and travel limit computer are provided to locate the grapple over the spent fuel storage racks and prevent collision with pool obstacles. The mast grapple has a redundant load path (i.e., two independent 100% load support mechanisms) so that no single component failure results in a fuel bundle drop. Interlocks on the machine:

- Limit vertical travel of the fuel grapple to provide shielding over the grappled fuel during transit; and
- Prevent lifting of fuel without grapple hook engagement and load engagement.

1.2.2.5.6 Fuel Storage Facility

New and spent fuel storage facilities are required for fuel and associated equipment.

New Fuel Storage

New fuel is stored in the new fuel storage racks in the buffer pool of the Reactor Building. These are side-loading racks of stainless steel construction with neutron absorbing material. This ensures that a full array of loaded fuel remains subcritical by 5% Δk under all conditions.

Spent Fuel Storage

Spent fuel storage racks are of stainless steel construction with neutron absorbing material. This ensures that a full array of loaded spent fuel remains subcritical by 5% Δk under all conditions.

Adequate water shielding is always maintained in storage pools by the use of level sensors. All storage pools are constructed with stainless steel liners to form a leak-tight barrier. A leak detection system monitors liner integrity.

The thermal-hydraulic design of the rack provides sufficient natural convection cooling flow to remove decay heat without exceeding 100°C (212°F).

1.2.2.5.7 Under-Vessel Servicing Equipment

The primary functions of the under-vessel servicing equipment are to:

- Install and remove FMCRDs;
- Install and remove FMCRD packing sections and motors;
- Make connections to neutron detectors and gamma thermometers;

- Provide servicing tools; and
- Provide a work platform and CRD handling equipment.

Under-Vessel Platform

The under-vessel platform provides a working surface for personnel and equipment to the entire under-vessel area. This requires 360° rotational capability. The platform also provides the facility for operation of the FMCRD handling machine for the automatic removal of the FMCRDs.

1.2.2.5.8 FMCRD Maintenance Area

The FMCRD maintenance area is designed and equipped to perform FMCRD maintenance related activities, including decontamination of the FMCRD components, acceptance testing, and storing spare drives. Maintenance tasks use a combination of manual and remote operations to reduce radiation exposure to plant personnel and to reduce contamination of surrounding equipment during operation.

The FMCRD maintenance area is located in a shielded room near the drywell equipment entry door. The layout of the room permits a convenient and efficient sequencing of work while reducing exposure to personnel.

1.2.2.5.9 Fuel Cask Cleaning

Spent fuel cask cleaning is performed in two different areas of the plant. Spent fuel cask cleaning is performed at the receiving area in the Fuel Building if required to remove surface dirt accumulated during transportation. It is also performed in the cask pit following loading of spent fuel, under the jurisdiction of health physics personnel.

The receiving area of the plant has facilities for:

- Checking the cask for contamination;
- Cleaning the cask of road dirt;
- Inspection of the cask for damage;
- Attachment of the cask lifting yoke;
- Removal of head bolts and attachment of head lifting cables; and
- Moving the cask into the cask pit using the main Fuel Building crane.

The cask pit area in the Fuel Building includes:

- A deep drainable pit with gate access to the storage pool for underwater cask loading;
- An underwater area for the storage of the cask head and lifting yoke; and
- An area for high pressure cleaning and decontamination. This area is accessible for chemical and hand scrubbing, refastening the head, and for smear tests.

1.2.2.5.10 Fuel Transfer System

The ESBWR is equipped with an Inclined Fuel Transfer System (IFTS). In general the arrangement of the IFTS consists of a terminus at the upper end in the Reactor Building buffer pool that allows the fuel to be tilted from a vertical position to an inclined position prior to transport to the spent fuel pool. There are means to lower the transport device (i.e., a carriage), means to seal off the top end of the transfer tube, and a control system to affect transfer. The IFTS has a lower terminus in the Fuel Building storage pool, and a means to tilt the fuel to be removed from the transport cart. There are controls contained in local control panels to affect transfer. There is a means to seal off the upper and lower end of the tube while allowing filling and venting of the tube.

There is sufficient redundancy and diversity in equipment and controls to prevent loss of load (i.e., carriage with fuel is released in an uncontrolled manner), and there are no modes of operation that allow simultaneous opening of any set of valves that could cause draining of water from the upper pool in an uncontrolled manner.

The IFTS has sufficient cooling such that a freshly removed fuel assembly can remain in the IFTS until it is removed without damage to the fuel or excessive overheating.

All IFTS components are not required to remain operable under all the anticipated ranges of the abnormal or accident plant environment. However, the IFTS tubes and supporting structure can withstand an SSE without failure of the basic structure or compromising the integrity of adjacent equipment and structures. Therefore, the portion of the IFTS transfer tube assembly from where it interfaces with the upper fuel pool, the portion of the tube assembly extending through the building, the drain line connection, and the lower spent fuel pool terminus equipment (i.e., tube, valve, support structure, and bellows) are designated as nonsafety-related and Seismic Category I. The remaining equipment is designated as nonsafety-related and Seismic Category II or NS.

The IFTS carriage primarily handles nuclear fuel using a removable insert, and is capable of handling control blades with a separate insert in the transfer cart.

For radiation protection, personnel access into areas of high radiation or areas immediately adjacent to the IFTS is controlled. Access to any area adjacent to the transfer tube is controlled through a system of physical controls, interlocks and an alarm. Specifically,

- Controls prevent personnel from inadvertently or unintentionally being left in those areas at the time the access doors are closed;
- During IFTS operation or shutdown, personnel are prevented from (a) either reactivating the IFTS while personnel are in a controlled maintenance area, or (b) entering a controlled IFTS maintenance area while irradiated fuel or components are in any part of the IFTS;
- Both an audible alarm and flashing red lights are provided both inside and outside any maintenance area indicating IFTS operation;
- Radiation monitors with alarms are provided both inside and outside any maintenance area; and

- A system of keylocks in one of the IFTS main operation panels and in the main control room is provided to control access to any IFTS maintenance area.

A procedure provides instructions to the IFTS operators on how to maintain the IFTS filled with water in the event (for any reason) the fuel transport cart with fuel loaded within the IFTS cannot be moved (i.e., fuel cannot be removed from within the IFTS).

1.2.2.5.11 [Deleted]

1.2.2.6 Reactor Auxiliary Systems

1.2.2.6.1 Reactor Water Cleanup/Shutdown Cooling System

The Reactor Water Cleanup/Shutdown Cooling (RWCU/SDC) system has the following primary functions:

- Purify reactor coolant during normal operation and shutdown;
- Transfer sensible and core decay heat produced when the reactor is being shutdown or is in the shutdown condition;
- Provide decay heat removal and high pressure cooling of the primary coolant during periods of reactor isolation (hot standby);
- Implement the removal of excess reactor coolant during startup and hot standby;
- Maintain coolant flow from the reactor vessel bottom head to reduce thermal stratification;
- Warm the reactor coolant prior to startup and vessel hydro testing.

The system consists of two independent trains. Each train includes:

- One non-regenerative heat exchanger;
- One regenerative heat exchanger;
- One low capacity cleanup (function) pump;
- One high capacity SDC pump;
- One demineralizer; and
- Associated valves and pipes.

The RWCU/SDC system is classified as a nonsafety-related system. However, its RCPB and containment isolation functions are safety-related, and thus, those functions are Seismic Category I. The electrical power supplies to the two trains are from separate nonsafety-related diesel-backed electrical busses.

During normal plant operation, the system operates at reduced flow in the cleanup mode, continuously withdrawing water from the RPV. The water is cooled through the heat exchangers and is circulated by the cleanup pump to the demineralizer for removal of impurities. Purified water returns to the regenerative heat exchanger where it is reheated, and then flows into the feedwater lines and is returned to the RPV. One train is in operation while the other is in standby.

Redundant trains permit shutdown cooling if only one train is available. The cooldown time is extended when using only one train. In the event of loss of preferred power and the most limiting single active failure, the RWCU/SDC systems brings the RPV to a ≤ 93.3°C (≤ 200°F) cold shutdown condition in conjunction with operation of the Isolation Condensers.

During hot standby and startup, excess water resulting from CRD system purge water injection and expansion during plant heatup is dumped, or overboarded, to the main condenser or the radwaste system to control reactor water level.

The RWCU/SDC system maintains the temperature difference between the reactor dome and the bottom head drain to preclude excessive thermal stratification.

Flow rate, pressure, temperature and conductivity are measured, recorded or indicated, and alarmed, if appropriate, in the MCR.

Pumps are provided with interlocks for automatic operation, and with switch and status indication for manual operation from the MCR. Pneumatic-operated isolation valves are automatically and manually actuated.

The RWCU/SDC system contains cross-tie lines to the Fuel and Auxiliary Pools Cooling System (FAPCS) that enable it to take suction from the suppression pool for post-accident containment heat removal in place of FAPCS. This allows RWCU/SDC to perform suppression pool cooling in the unlikely event that fuel damage has occurred without having to transport radioactive water through the Fuel Building.

1.2.2.6.2 Fuel and Auxiliary Pools Cooling System

The FAPCS consists of two physically separated cooling and cleaning trains, each with 100% capacity during normal operation. Each train contains a pump, a heat exchanger and a water treatment unit for cooling and cleaning of pools except the Isolation Condenser and Passive Containment Cooling System (IC/PCCS) pools. A separate subsystem with its own pump, heat exchanger and water treatment unit is dedicated for cooling and cleaning of the IC/PCCS pools independent of the FAPCS cooling and cleaning train operation during normal plant operation.

A four-valve bridge of motor-operated valves is attached to each end of the FAPCS cooling and cleaning trains. With proper alignment of the motor-operated valves of these bridges, the cooling and cleaning train is connected to one of the two pairs of suction and discharge piping loops to establish a flow path for cooling and cleaning of the desired pool. One loop provides the flow path for serving the spent fuel pool and auxiliary pools, and the other loop for serving the GDCS pools and suppression pool.

The primary design function of FAPCS is to cool and clean pools located in the containment, reactor building and fuel building, during normal plant operation. Through its piping system, FAPCS provides flow paths for filling and makeup of these pools during normal plant operation and under post-accident condition, as necessary.

FAPCS is also designed to provide the following accident recovery functions in addition to the spent fuel pool cooling function:

- Suppression pool cooling (SPC);
- Drywell spray;

- Low pressure coolant injection of suppression pool water into the RPV; and
- Alternate Shutdown Cooling.

At least one FAPCS cooling and cleaning train is available for continuous operation to cool and clean the water of the spent fuel pool during normal plant operation. The other train can be placed in standby mode or another operating mode. During refueling outages, both trains may be used to provide maximum cooling capacity for cooling the spent fuel pool, if needed.

Each FAPCS cooling and cleaning train has sufficient flow and cooling capacity to maintain spent fuel pool bulk water temperature below the limit under normal spent fuel pool heat load conditions. Under the maximum spent fuel pool heat load conditions associated with a full core off-load and irradiated fuel in the spent fuel pool for 20 years of plant operations, both trains are needed to maintain the bulk temperature below the limit.

All FAPCS operating modes, except the SPC mode, are manually initiated and controlled by the operator from the main control room. The SPC mode is initiated either manually, or automatically on a high suppression pool water temperature signal. Proper instruments are provided for indication of operating conditions to aid the operator during the initiation and control of system operation. Provisions are included in the design to prevent inadvertent draining of the pools during FAPCS operation.

Containment isolation valves are provided on the lines that penetrate the primary containment. Containment isolation valves are powered from independent safety-related sources. Air-operated valves with containment isolation function are designed to close upon loss of electric power supply, except for containment isolation valves on the suppression pool supply and return lines, which are fail as-is.

The containment isolation valves that are not required to open to perform a post-accident recovery function are automatically closed upon receipt of a containment isolation signal from the LD&IS. The containment isolation valves on the suppression pool suction and return lines and drywell spray lines are not automatically closed because these valves must be open when FAPCS performs an accident recovery function described above.

The FAPCS is a nonsafety-related system with the exception of piping and components required for:

- Containment isolation,
- Refilling of the IC/PCCS pools and the spent fuel pool with emergency water supplies from the Fire Protection System or another onsite or offsite sources, and
- The high-pressure interface with the Reactor Water Cleanup/Shutdown Cooling system used for low pressure coolant injection.

The FAPCS piping and components that are required to provide safety-related and/or accident recovery functions have Quality Group B or C and Seismic Category I or II classification. See Subsection 9.1.3 for additional details.

A detailed description of the FAPCS, including a listing of all pools serviced by FAPCS as well as system operations, is provided in Subsection 9.1.3.

1.2.2.7 Control Panels

1.2.2.7.1 Main Control Room Panels

The main control room (MCR) is comprised of an integrated set of operator interface panels (e.g., main control console, large display panel). The safety-related panels are seismically qualified and provide grounding, electrical independence and physical separation between safety-related divisions and between safety-related divisions and nonsafety-related components and wiring.

The main control room panels and other MCR operator interfaces are designed to provide the operator with information and controls needed to safely operate the plant in all operating modes (as denoted in the Chapter 16 Table 1.1-1, MODES) and maintain the plant in a safe shutdown condition. Human factors engineering principles have been incorporated into all aspects of the MCR design.

1.2.2.7.2 Radwaste Control Room Panels

The liquid and solid radwaste systems are operated from nonsafety-related control panels in the radwaste control room.

1.2.2.7.3 Local Control Panels and Racks

Local panels, control boxes, and instrument racks are provided as protective housings and/or support structures for electrical and electronic equipment to facilitate system operations at the local level. They are designed to maintain structural integrity as required under seismic and plant dynamic conditions. The term “local panels” includes local control boxes.

Local panels and racks containing equipment used for safety-related functions are classified as safety-related. They are located in areas in which there are no potential sources of missiles or pipe breaks that could jeopardize modules from more than one division. Each panel/rack containing equipment used for safety-related functions is qualified to Seismic Category I requirements, and provides grounding, electrical independence and physical separation between safety-related divisions and nonsafety-related components and wiring.

Electrical power to divisional panels/racks is from AC or DC power sources of the same division as that of each panel/rack itself. Power to the nonsafety-related panels/racks is from the nonsafety-related AC and/or DC sources.

1.2.2.8 Nuclear Fuel

The following subsections describe the fuel rods, bundles and channels for the ESBWR.

1.2.2.8.1 Fuel Rods and Bundles

It is intended that the specific fuel to be used in any facility that has adopted the certified design be in compliance with NRC approved fuel design criteria. This strategy is intended to permit future use of enhanced/improved fuel designs as they become available. However, this approach is predicated on the assumption that future fuel designs are extensions of the basic fuel technology that has been developed for boiling water reactors. Key fuel characteristics are addressed in Sections 4.2 and 4.3.

The following is a summary of the principal requirements that must be met by the fuel supplied to any facility utilizing the certified design:

- Fuel rod failure is not predicted to occur as a result of normal operation and anticipated operational occurrences.
- Control rod insertion is not prevented as a result of normal operation, anticipated operational occurrences or postulated accident.
- The number of fuel rod failures is not underestimated for postulated accidents.
- Coolability is maintained for all design basis events, including seismic and LOCA events.
- Specified acceptable fuel design limits (thermal and mechanical design limits) are not exceeded during any condition of normal operation, including the effects of anticipated operational occurrences.
- In the power operating range, the prompt inherent nuclear feedback characteristics tend to compensate for a rapid increase in reactivity.
- The reactor core and associated coolant, control and protection systems are designed to assure that power oscillations which can result in conditions exceeding specified acceptable fuel design limits are not possible or can be reliably and readily detected and suppressed.

1.2.2.8.2 Fuel Channel

It is intended that the specific fuel channel to be used in any facility adopting the certified design be in compliance with U.S. NRC approved fuel channel design criteria. This strategy is intended to permit future use of enhanced/improved fuel channel designs as they become available. However, this approach is predicated on the assumption that future fuel channel designs are extensions of the basic technology that has been developed for boiling water reactors. The key characteristic of this established BWR fuel channel technology is the use of zirconium-based (or equivalent) fuel channels, which preclude cross-flow in the core region.

The following is a summary of the principal requirements that must be met by the fuel channel supplied to any facility using the certified design:

- During any design basis events including the mechanical loading from safe shutdown earthquake event combined with LOCA event, fuel channel damage is not so severe as to prevent control rod insertion when it is required.
- Coolability is maintained for all design basis events.
- Channel bowing does not cause specified acceptable fuel design limits to be exceeded during normal operation and anticipated operational occurrences.

1.2.2.9 Control Rods

It is intended that the specific control rod to be used in any facility adopting the certified design be in compliance with U.S. NRC approved control rod design criteria. This strategy is intended to permit future use of enhanced/improved control rod designs as they become available. Key

characteristics and principal requirements of BWR control rods are provided within Sections 4.2, 4.3, 4.5 and 4.6.

1.2.2.10 Radioactive Waste Management System

1.2.2.10.1 Liquid Waste Management System

The Liquid Waste Management System (LWMS) collects, monitors, and treats liquid radioactive waste for plant reuse whenever practicable.

The LWMS consists of the following four subsystems:

- Equipment (low conductivity) drain subsystem;
- Floor (high conductivity) drain subsystem;
- Chemical drain subsystem; and
- Detergent drain subsystem.

The LWMS processing equipment is located in the radwaste building. Any discharge is such that concentrations and quantities of radioactive material and other contaminants are in accordance with applicable local, state, and federal regulations.

All potentially radioactive liquid wastes are collected in sumps or drain tanks at various locations in the plant. These wastes are transferred to collection tanks in the radwaste building.

Waste processing is done on a batch basis. Each batch is sampled as necessary in the collection tanks to determine concentrations of suspended solids and chemical contaminants. Equipment drains and other low-conductivity wastes are treated by filtration and/or demineralization and are transferred to the condensate storage tank for reuse. Floor drains and other high conductivity wastes are treated by filtration, reverse osmosis process and ion exchange prior to being either discharged or recycled for reuse. Laundry drain wastes and other detergent wastes of low activity are treated by filtration, sampled, and released via the liquid discharge pathway. Chemical wastes are pre-conditioned by adding a chemical solution in the chemical drain collector tank, and transferred to floor drain collection tanks for further processing. Protection against inadvertent release of liquid radioactive waste is provided by design redundancy, instrumentation for the detection and alarm of abnormal conditions, automatic isolation, and administrative controls. Processing equipment such as filtration, demineralization and reverse osmosis unit, and cross-connections with each subsystem are adopted to augment the waste processing capability and flexibility.

If the liquid is returned to the plant, it meets the purity requirements for condensate makeup. If the liquid is discharged, the activity concentration is consistent with the discharge criteria of 10 CFR 20 and dose commitment in 10 CFR 50, Appendix I.

Section 11.2 provides additional information about the LWMS.

1.2.2.10.2 Solid Waste Management System

The Solid Waste Management System (SWMS) is designed to control, collect, handle, process, package, and temporarily store prior to shipment solid radioactive waste generated as a result of normal operation, including anticipated operational occurrences. This includes filter backwash

sludges, bead resins generated by the LWMS, RWCU/SDC, FAPCS, and condensate system, and concentrated wastes generated by the LWMS. Contaminated solids such as High Efficiency Particulate Air and cartridge filters, rags, plastic, paper, clothing, tools, and equipment are sorted and packaged into several kinds of waste containers for off-site disposal. There is no liquid plant discharge from the SWMS.

The SWMS consists of the following four subsystems:

- A waste collection subsystem;
- A waste processing subsystem;
- Dry solid waste accumulation and conditioning subsystem; and
- Container storage subsystem.

Spent bead resin sluiced from the RWCU/SDC system, FAPCS, condensate and LWMS are transferred by the waste collection subsystem to one-of-three spent resin tanks for decay and storage. Filter backwash sludges from the condensate system and LWMS are transferred to one-of-two phase separators. Concentrated wastes from LWMS are collected into a concentrated waste tank.

The waste processing subsystem consists of built-in dewatering stations. High Integrity Containers (HIC) are filled with sludges from the phase separator, bead resin from the spent resin tanks, and concentrated wastes from the concentrated waste tank. Spent cartridge filters may also be placed in the HIC.

Dry wastes consist of air filters, miscellaneous paper, rags, etc., from contaminated areas; contaminated clothing, tools, and equipment parts that cannot be effectively decontaminated; solid laboratory wastes; and wastes that may be non-contaminated. The activity of much of this waste is low enough to permit handling by contact. These wastes are collected in containers located in appropriate areas throughout the plant. The filled containers are sealed and moved to controlled-access enclosed area for temporary storage.

Connections are provided for processing systems to augment the waste processing capability and flexibility.

Temporary storage for over one month's volume of packaged waste is provided in the radwaste building. Packaged waste includes high integrity containers, compactor boxes, shielded filter containers, and 208-liter (55-gallon) drums as necessary.

The SWMS is designed to package the radioactive solid waste for off-site shipment and burial, in accordance with the requirements of applicable NRC and Department of Transportation regulations, including Regulatory Guide 1.143, 10 CFR 61, 10 CFR 71, and 49 CFR 170 through 178.

Section 11.4 provides additional information about the SWMS.

1.2.2.10.3 Gaseous Waste Management System

The gaseous waste management system minimizes and controls the release of gaseous radioactive effluents by delaying, filtering, or diluting various offgas process and leakage gaseous releases, which may contain the radioactive isotopes of krypton, xenon, iodine, and

nitrogen. The Offgas System (OGS) is the principal gaseous waste management subsystem. The various building HVAC systems perform other gaseous waste functions.

The OGS provides for holdup and decay of radioactive gases in the offgas from the steam jet air ejectors (SJAEs) and consists of process equipment along with monitoring instrumentation and control components.

The OGS design minimizes the explosion potential in the offgas process stream through recombination of radiolytic hydrogen and oxygen under controlled conditions. Although the OGS is nonsafety-related, it is capable of withstanding an internal hydrogen explosion and is designed to ASME Code Section VIII-Division I and the ASME B31.1 Piping Code.

The OGS includes redundant hydrogen/oxygen catalytic recombiners and ambient temperature charcoal beds to provide for process gas volume reduction and radionuclide retention/decay. The system processes the SJAE discharge during plant startup and normal operation before discharging the airflow to the Turbine Building stack.

A manually operated, three-way switch is provided to allow operation of the charcoal adsorbers in (1) AUTO, (2) TREAT or (3) BYPASS mode:

(1) OGS start-ups are normally made in the AUTO mode, which provides valve alignment to send the offgas only through the first (guard bed) charcoal adsorber.

(2) Normal OGS operation is in the TREAT mode, which provides valve alignment to send the offgas through both the guard bed and the main charcoal adsorber beds.

(3) OGS operation in the BYPASS mode provides valve alignment to allow offgas flow to completely bypass the charcoal adsorbers. However, this mode of operation requires simultaneous actuation of two manual switches by the plant operator from the Main Control Room.

Subsection 11.3.2 provides additional information about the OGS.

1.2.2.11 Power Cycle

1.2.2.11.1 Turbine Main Steam System

The Turbine Main Steam System (TMSS) supplies steam generated in the reactor to the turbine, Moisture Separator Reheaters, steam auxiliaries and turbine bypass valves. The TMSS does not include the seismic interface restraint or main turbine stop or bypass valves.

The TMSS:

- Accommodates operational stresses such as internal pressure and dynamic loads without failures;
- Provides a seismically analyzed fission product leakage path to the main condenser;
- Includes suitable access and/or remote functions to permit in-service testing and inspections; and
- Closes the steam auxiliary isolation valve(s) on branch lines between the main steam isolation valves (MSIVs) and main turbine stop valves (excluding the fission product

leakage path to the condenser) on an MSIV isolation signal. These valves fail closed on loss of electrical power to the valve actuating solenoid or on loss of pneumatic pressure.

The TMSS main steam piping consists of four lines from the seismic interface restraint to the main turbine stop valves. The header arrangement upstream of the turbine stop valves allows the valves to be tested on-line and supplies steam to the power cycle auxiliaries, as needed.

The TMSS is nonsafety-related. However, the TMSS is analyzed, fabricated and examined to ASME Code Class 2 requirements, and classified as Seismic Category II. Inservice inspection is performed in accordance with ASME Section XI requirements for Code Class 2 piping.

Turbine MS piping and all branch lines 65 mm (2.5 inches) or larger in diameter, including the steam auxiliary valve(s), from the seismic interface restraint to the main stop and main turbine bypass valves are analyzed to demonstrate structural integrity under safe shutdown earthquake (SSE) loading conditions. The MSIV fission product leakage path to the main condenser is also analyzed to demonstrate structural integrity under SSE loading conditions.

The TMSS is located in the steam tunnel and Turbine Building.

1.2.2.11.2 Condensate and Feedwater System

The Condensate and Feedwater System (C&FS) consists of the piping, valves, pumps, heat exchangers, controls and instrumentation and the associated equipment and subsystems, which supply the reactor with heated feedwater in a closed steam cycle utilizing regenerative feedwater heating. The C&FS extends from the main condenser outlet up to but not including the seismic interface restraint outside of containment.

The C&FS provides a dependable supply of high quality feedwater to the reactor at the required flow, pressure and temperature. The condensate pumps take the deaerated condensate from the condenser hotwell and deliver it through the SJAE condenser, the gland steam condenser, the offgas condenser, the condensate filters and demineralizers, and through three strings of low pressure feedwater heaters to the open feedwater tank.

Four identical and independent, fixed speed motor-driven feedwater booster pumps are provided. The feedwater booster pumps take suction from the open feedwater heater tank and provide adequate suction head for the reactor feedwater pumps. Three of the four booster pumps are normally in operation while the other remains in standby. The reactor feed pumps take suction from the discharge header of the feedwater booster pumps and discharge through high-pressure feedwater heaters to the reactor. Turbine extraction steam is used for multiple stages of feedwater heating. The drains from each stage of the low-pressure feedwater heaters are cascaded through successively lower pressure feedwater heaters to the main condenser. The drains for each stage of the high pressure feedwater heaters are cascaded to the feedwater tank.

The C&FS does not serve or support any safety function and has no safety design basis. Failure of this system cannot compromise any safety-related systems or prevent safe shutdown.

Portions of the system that are radioactive during operation are shielded with access control for inspections. Leakage is minimized with welded construction used wherever practicable. Relief discharges and operating vents are channeled through closed systems.

The C&FS piping is located in the steam tunnel and the turbine building. The feedwater system piping is designed such that waterhammer loads that could potentially result from anticipated flow transients are below the C&FS piping and reactor pressure vessel design limits.

The C&FS has alarms and parameter displays in the main control room.

1.2.2.11.3 Condensate Purification System

The Condensate Purification System (CPS) continuously purifies and treats the condensate as required to maintain reactor feedwater purity, using filtration to remove solid corrosion products and ion exchange to remove condenser leakage and other dissolved impurities.

The CPS does not perform or support any safety-related function, and thus, has no safety design basis. No failure within the CPS could prevent safe shutdown.

Wastes from the CPS are collected in controlled areas and sent to the radwaste system for treatment or disposal.

The CPS is located in the turbine building.

The CPS has alarms and display for effluent conductivity in the main control room.

1.2.2.11.4 Main Turbine

The main turbine for the ESBWR Standard Plant has one high-pressure turbine and three low-pressure turbines. Other turbine configurations may be selected for plant-specific applications in order to obtain optimal thermal performance of the turbine plant at the site-specific conditions. The steam passes through moisture separator reheaters (MSRs) prior to entering the low-pressure turbines. Steam exhausted from the low-pressure turbines is condensed and degassed in the condenser. Steam is extracted from each turbine and is used to heat the feedwater.

The control system for the main turbine provides control and monitoring of turbine speed, load, and steam flow for startup, normal operation and shutdown by operating the main steam turbine stop valves, control valves, and intermediate stop and intercept valves. The main turbine system includes supervisory instrumentation that is provided for startup and shutdown monitoring, operational analysis and malfunction diagnosis.

The Main Turbine is equipped with a single-speed, electric motor-driven turning gear, which is used to rotate the turbine generator shafts slowly and continuously if needed when the main turbine is not in service, and especially during startup and shutdown periods when turbine rotor temperature changes occur.

The turbine-generator (TG) system is enclosed within the turbine building. The turbine generator is orientated within the turbine building to be inline with the reactor building to minimize the potential for any high energy TG system generated missiles damaging any safety-related equipment or structures.

1.2.2.11.5 Turbine Gland Seal System

The Turbine Gland Seal System (TGSS) provides seal steam to prevent the escape of radioactive steam from the turbine shaft/casing penetrations and valve stems and prevent air in-leakage through subatmospheric turbine glands.

The TGSS consists of a sealing steam pressure regulator, a sealing steam header, a gland steam condenser, two full capacity exhaust blowers and associated piping, valves and instrumentation.

The TGSS is a nonsafety-related system.

The high-pressure turbine shaft seals must accommodate a range of turbine shell pressures. The LP turbine shaft seals operate against a vacuum at all times. The gland seal outer portion steam-air mixture is exhausted to the gland steam condenser via the seal vent annulus (i.e., end glands), which is maintained at a slight vacuum. The radioactive content of the sealing steam, which eventually exhausts to the plant vent and the atmosphere, makes a negligible contribution to overall plant radiation release. In addition, the auxiliary steam system is designed to provide a 100% backup to the normal gland seal process steam supply, if available. A full capacity gland steam condenser is provided and equipped with two 100% capacity blowers.

A radiation monitor that is dedicated to the TGSS and installed on the gland steam condenser exhaust blower discharge monitors the TGSS effluents. High monitor readings are alarmed in the MCR. The system effluents are then discharged to the Turbine Building Compartment Exhaust system and the Turbine Building vent stack, where further effluent radiation monitoring is performed.

1.2.2.11.6 Turbine Bypass System

The Turbine Bypass System (TBS) can pass steam directly to the main condenser under the control of the Steam Bypass and Pressure Control (SB&PC) system. Steam is bypassed to the condenser whenever the reactor steaming rate exceeds the load permitted to pass to the turbine generator. The TBS in the ESBWR Standard Plant has the design capability to shed 110% of rated steam flow, which facilitates shedding of 100% of the turbine generator rated load without reactor trip or operation of the SRVs. The SB&PC system provides main turbine control valve and bypass valve flow demands, to maintain a nearly constant reactor pressure during normal plant operation.

The TBS, which does not perform or ensure any safety-related function, is classified as nonsafety-related. No failure within the TBS could prevent safe shutdown. However, the TBS is used to mitigate anticipated operational occurrences (which per 10 CFR 50, Appendix A, are defined as part of normal operations), and is analyzed to demonstrate structural integrity under the safe shutdown earthquake (SSE) loading conditions.

The TBS consists of hydraulically operated bypass valves that are connected to the main steam header upstream of the turbine main stop valves, and dump lines that connect each bypass valve outlet to the condenser shell. No single failure can reduce the available bypass capacity to less than 50% of its rated capacity. Alternative steam bypass configurations meeting this redundancy requirement may be considered during detailed design.

Both automatic and manual control of the turbine bypass valves is provided. The turbine bypass valves are opened by a signal received from the SB&PC system whenever the actual steam pressure exceeds the preset steam pressure by a small margin. This occurs when the amount of steam generated by the reactor cannot be entirely used by the turbine. This bypass demand signal opens the first of the individual valves. As the bypass demand increases, additional bypass valves are opened, dumping the steam to the condenser. Pressure-reducing assemblies are located between the bypass valves and the condenser connections, and sparger piping

distributes the steam within the condenser. The pressure-reducing assemblies may be integral with the bypass valves. The bypass valves are equipped with fast-acting solenoid valves to allow rapid opening of bypass valves upon turbine trip or generator load rejection.

The bypass valves are automatically signaled to open rapidly upon load rejection or turbine trip. The bypass valves automatically trip closed whenever the condenser pressure increases to a preset value. Individual bypass valves also fail closed on loss of electrical power to their operator. Individual bypass valve hydraulic accumulators have sufficient capacity to open the associated valve for at least six seconds after complete loss of power to the hydraulic oil pumps.

1.2.2.11.7 Main Condenser

The main condenser is designed to condense and deaerate the exhaust steam from the main turbine and provide a heat sink for the TBS.

The main condenser does not perform, ensure or support any safety-related function, and thus, has no safety design basis. It is, however, designed with necessary shielding and controlled access to protect plant personnel from radiation.

The main condenser for the ESBWR Standard Plant is a multi-pressure, triple-shell unit. However, nothing precludes the use of a single-pressure and parallel (instead of series) circulating water system because these features have no impact on the Nuclear Island. Circulating water flows through each of the single-pass tube bundles as cooling water to remove waste heat rejected by the turbine-generator cycle.

Any leakage is into the shell side of the main condenser because the main condenser operates at a vacuum. Tube side or circulating water in-leakage is detected by measuring the conductivity of sample water extracted at selected locations in the condenser. In addition, conductivity is monitored at the discharge of the condensate pumps and alarms are provided in the MCR.

During normal plant operation at power, the condenser is at a vacuum and consequently no radioactive release can occur. Loss of vacuum sequentially leads to a control room alarm, turbine trip, RPS trip, turbine bypass closure and MSIV closure to prevent condenser overpressurization.

Ultimate overpressure protection is provided by rupture diaphragms on the turbine exhaust hoods.

The instrumentation and control features that monitor the performance to ensure that the condenser is in the correct operating mode include:

- Hotwell water level — Automatically controlled within preset limits. At minimum normal operating hotwell water level, and normal full load condensate flow rate, the condenser provides a two-minute minimum holdup time for N^{16} decay.
- Condenser pressure — Key overall performance indicator that initiates alarms and trips at preset levels.
- LP turbine exhaust hood temperature — Automatically initiates turbine exhaust water sprays to protect the turbine.
- Inlet and outlet circulating water temperature — Monitors performance only.

- Conductivity within the condenser and at the discharge of the condensate pumps — Initiates alarms at preset levels.

The potential for flooding from the main condenser is less than that from the Circulating Water (CIRC) system so only the CIRC flooding protection is needed. The Condenser pressure indicators are located above any potential flood level.

Spray pipes and baffles are designed to protect the main condenser internals from high-energy flow inputs.

Hydrogen buildup during operation is prevented by continuous evacuation of the main condenser.

Noncondensable gases are removed from the power cycle by the Main Condenser Evacuation System (MCES). The MCES removes power cycle noncondensable gases including the hydrogen and oxygen produced by radiolysis of water in the reactor and exhausts them to the Offgas system during plant power operation, or to the turbine building ventilation system exhaust during early plant startup. The MCES establishes and maintains a vacuum in the condenser by the use of steam jet air ejectors during power operation, and by a mechanical vacuum pump during early startup.

Steam jet air ejectors and condenser vacuum pumps are used to remove the noncondensable air/gases and associated water vapor from the main condenser shells. Two 100% capacity steam jet air ejector (SJAE) units and two 50% capacity condenser vacuum pumps are provided. One SJAE unit is normally in operation and the other is on standby, or they can both be operated simultaneously at half load.

1.2.2.11.8 Circulating Water System

The Circulating Water (CIRC) system provides cooling water for removal of the power cycle waste heat from the main condensers and transfers this heat to the normal power heat sink.

The CIRC system does not perform, ensure or support any safety-related function, and thus, has no safety design basis.

To prevent flooding of the turbine building, the CIRC system automatically isolates in the event of gross system leakage. The circulating water pumps are tripped and the pump and condenser valves are closed in the event of a system isolation signal from the condenser area high-high level switches. A condenser area high level alarm is provided in the MCR.

A reliable logic scheme is used (e.g., 2-out-of-3 logic) to minimize potential for spurious isolation trips.

1.2.2.12 Station Auxiliaries

1.2.2.12.1 Makeup Water System

The Makeup Water System (MWS) is comprised of two nonsafety-related subsystems: the demineralization subsystem and the storage and transfer subsystem. The demineralization subsystem produces the demineralized water that is used in nonsafety-related applications. The storage and transfer subsystem distributes water throughout the entire plant. The MWS pumps and demineralization subsystem are only designed for normal power generation demineralized

water requirements. During a shutdown/refueling condition, temporary off-site water treatment equipment and pumps are connected to the Demineralized Water Storage Tank and the demineralized water distribution network.

The demineralization subsystem consists of a modular reverse osmosis unit, two high pressure reverse osmosis pumps, a reverse osmosis product water catch tank, two reverse osmosis product water forwarding pumps, and a modular mixed bed demineralizer unit. Cartridge filters and a chemical addition system are included to ensure optimum reverse osmosis unit operation. The storage and transfer subsystem consists of a storage tank, transfer pumps, distribution piping, and valves. The system is housed in and controlled from the water treatment building. System components in contact with the demineralized water are stainless steel.

Based on local weather conditions, the demineralized water storage tank and MWS piping and instrumentation that are exposed to freezing conditions are provided with freeze protection.

The MWS is a nonsafety-related system, and has no safety design basis other than provision for safety-related containment penetrations and isolation valves.

1.2.2.12.2 Condensate Storage and Transfer System

The Condensate Storage and Transfer System (CS&TS) stores condensate grade water and transfers it to plant water systems and supply points. End users include the main condenser hotwell, CRD system, RWCU/SDC system fill, FAPCS fill, suppression and GDCS pools fill, C&FS fill, and liquid and solid radwaste system flushing.

The CS&TS includes a storage tank and transfer pumps. Components in contact with the condensate in this part of the system are stainless steel. The tank is surrounded by a basin to ensure the contents of the entire tank are contained if there is a leak. Based on local weather conditions, the water storage tank and CS&TS piping and instrumentation that are exposed to freezing conditions are provided with freeze protection.

The system does not perform or ensure any safety-related function, and is not required to achieve or maintain safe shutdown. Therefore, the system is nonsafety-related and has no safety design basis.

1.2.2.12.3 Reactor Component Cooling Water System

The Reactor Component Cooling Water System (RCCWS) cools reactor auxiliary equipment, including the Chilled Water System, the RWCU/SDC non-regenerative heat exchangers, the FAPCS heat exchangers, and the Standby On-Site AC Power Supply Diesel Generators.

The RCCWS has two trains. Each train has three pumps, three heat exchangers, and a surge tank. Both trains share a chemical addition tank. The Plant Service Water System cools the RCCWS heat exchangers.

The RCCWS does not perform any safety-related function.

1.2.2.12.4 Turbine Component Cooling Water System

The Turbine Component Cooling Water System (TCCWS) cools turbine building auxiliary equipment including turbine lube oil coolers, offgas condensers, generator stator and hydrogen coolers.

The system does not perform or ensure any safety-related function, and is not required to achieve or maintain safe shutdown. Therefore, the system is nonsafety-related and has no safety design basis.

1.2.2.12.5 Chilled Water System

The Chilled Water System (CWS) consists of two independent and interconnected subsystems: the Nuclear Island Chilled Water Subsystem (NICWS) and the Balance-of-Plant Chilled Water Subsystem (BOPCWS). The CWS provides chilled water to the air handling units and fan-coil units in all the facilities of the plant.

The NICWS has two trains. Each train has packaged water chiller units with local control panels (one per chiller), pumps (one per chiller), surge tank, air separator, and chemical feed tank. The BOPCWS only has one train with packaged water chiller units, including local control panels (one per chiller), pumps (one per chiller), a surge tank, an air separator and a chemical feed tank. The NICWS condensers are cooled by the RCCWS and the BOPCWS condensers are cooled by the TCCWS.

With the exception of isolation of the containment penetration to the drywell coolers, CWS does not perform or ensure any safety-related function, and has no safety design basis.

1.2.2.12.6 Oxygen Injection System

The Oxygen Injection System (OIS) maintains the oxygen concentration in the condensate and feedwater to suppress corrosion and corrosion product release in the C&FS, and is located in the Turbine Building. The oxygen gas supply consists of a bulk liquid oxygen storage tank, liquid oxygen vaporizers, gaseous oxygen compressors, oxygen isolation skid, and the necessary piping, valves and controls. For each injection point, the oxygen injection module contains two 100% capacity flow transmitters, one flow control valve, two manual flow control valves, one pressure transmitter, one manual vent, and one test connection. The oxygen injection module injects oxygen into condensate after condensate polishing and into feedwater downstream of the direct contact feedwater heater.

The OIS does not perform or ensure any safety-related function, and is not used to achieve or maintain safe shutdown. Therefore, the OIS is nonsafety-related and has no safety design basis.

1.2.2.12.7 Plant Service Water System

The Plant Service Water System (PSWS) consists of two independent and 100% redundant trains that continuously supply cooling water to the Reactor Component Cooling Water System (RCCWS) and Turbine Component Cooling Water System (TCCWS) heat exchangers. Each PSWS train consists of two 50% capacity vertical pumps taking suction in parallel from a plant service water basin. During normal operation the primary source of cooling water for the PSWS is the Normal Power Heat Sink (NPHS), with the PSWS pumps and Auxiliary Heat Sink (AHS) serving as a backup.

If the PSWS pumps are in operation, the PSWS mechanical draft cooling towers are used to reject the heat removed from RCCWS and TCCWS. Heat removed from the RCCWS and TCCWS is rejected to the main cooling tower basin when the NPHS is in operation. Remotely operated isolation valves and a crosstie line permit routing of the heated plant service water to either cooling tower. The return header is provided with a flow element that is used for on-line

monitoring, leak detection, and can also be used during initial start-up for heat exchanger pressure loss and pump performance calibration, prior to system balancing.

The PSWS does not perform or ensure any safety-related function, and is not required to achieve or maintain safe shutdown. Therefore, the system is nonsafety-related and has no safety design basis.

1.2.2.12.8 Service Air System

During normal operation, the Service Air System (SAS) provides a continuous supply of compressed air for instrument air, general plant use and service air outlets. The SAS consists of four compressors that are capable of supplying two parallel air trains. Each compressor is equipped with an inter-cooler, after-cooler and moisture separator. There are two service air receivers in parallel to provide surge volume and pressure spike dampening. Both air trains are connected to a common header that distributes air to the Turbine Building, Reactor Building, Radwaste Building, Control Building, Fuel Building, and Instrument Air System (IAS). The SAS receivers also serve as a backup source of compressed air to the Instrument Air System (IAS) upon loss of air system pressure due to a loss of all compressors.

The system is nonsafety-related and Seismic Category NS, except for the containment penetration, which is required to maintain containment integrity. The containment penetration portion is designed to ASME Section III, Class 2, Seismic Category I, and consists of a check valve inside containment and a manually operated valve outside containment.

1.2.2.12.9 Instrument Air System

During normal operation, the IAS makes use of the SAS compressors to provide dry, oil free, filtered compressed air for valve actuators, nonsafety-related instrument control functions, and general instrumentation and valve services outside of containment. The instrument and control systems inside containment are supplied by gaseous nitrogen from the High Pressure Nitrogen Supply System (HPNSS) during normal plant operation. During maintenance outages, the IAS provides compressed air to the nitrogen users located inside containment by way of the HPNSS piping. The IAS includes features that ensure operation over the full range of normal plant operations. The IAS operates during normal plant operation, plant startup and plant shutdown. The IAS is designed to be functional after a Safe Shutdown Earthquake (SSE).

The system is nonsafety-related and Seismic Category NS.

1.2.2.12.10 High Pressure Nitrogen Supply System

The High Pressure Nitrogen Supply System (HPNSS) consists of distribution piping between the Containment Inerting System (CIS) and the containment nitrogen users. The HPNSS is a backup to the CIS.

The containment high-pressure nitrogen consumers include the Nuclear Boiler System (NBS) Automatic Depressurization System (ADS) function Safety Relief Valve (SRV) accumulators and Isolation Condenser steam and condensate line Isolation Valve accumulators. These high-pressure nitrogen consumers are normally served by the CIS. The HPNSS provides high-pressure nitrogen gas to the nitrogen consumers during normal operating periods when the Containment Inerting System fails to maintain the required nitrogen supply pressure. The HPNSS provides a stored supply of high-pressure nitrogen gas that is sized to compensate for

nitrogen leakage from the SRV accumulators during SRV actuation for a period of eight hours. However, the HPNSS is not required to provide makeup to the SRV accumulators during any design basis event involving SRV actuation.

This system is nonsafety-related and Seismic Category NS except for safety-related penetrations, and isolation valves. These components are safety-related, and Seismic Category I. The ADS function SRV accumulators and piping are part of the Nuclear Boiler System.

1.2.2.12.11 Auxiliary Boiler System

The Auxiliary Boiler System (ABS) consists of package boilers. During plant startup and shutdown and at any other time when insufficient main steam or extraction steam is available, the ABS can provide the necessary steam at sufficient pressure to the various equipment items addressed below.

- To the feedwater system, to provide hot water during plant startup when decay heat is not present or is insufficient on its own to startup the plant in a timely manner (i.e., during initial plant startup and following any prolonged maintenance outage);
- To the Steam Jet Air Ejectors, to maintain the motive power required to perform a continuous evacuation of the non-condensable gases from the Main Condenser and to the Offgas System;
- To the Turbine Gland Sealing System, to allow the Main Condenser to reach vacuum;
- Preoperational testing of Offgas System equipment; and
- Evaporation of liquid nitrogen for inerting of the Containment.

The ABS does not perform or ensure any safety-related function, and is not required to achieve or maintain safe shutdown. Therefore, the system is nonsafety-related and has no safety design basis.

1.2.2.12.12 [Deleted]

1.2.2.12.13 Hydrogen Water Chemistry System

The ESBWR includes the capability to connect a Hydrogen Water Chemistry system, but the system itself is not part of the ESBWR Standard Plant design.

1.2.2.12.14 Process Sampling System

The Process Sampling System (PSS) collects representative liquid samples for monitoring water quality and measuring system and equipment performance. The PSS provides for continuous and periodic sampling of principal fluid process streams associated with plant operation. Process samples requiring continuous monitoring or special conditioning are routed to one of the PSS sample stations. These sample stations also include provisions for the collection of grab samples to be taken for further laboratory analyses as required.

The PSS does not perform or ensure any safety-related function, and is not required to achieve or maintain safe shutdown. Therefore, the system is nonsafety-related and has no safety design basis.

1.2.2.12.15 Zinc Injection System

The ESBWR includes the capability to connect a Zinc Injection System, but the system itself is not part of the ESBWR Standard Plant design.

1.2.2.12.16 Freeze Protection

Freeze protection in the form of insulation, steam, and/or electrical heating is required for all external tanks and piping that may freeze during winter weather. This equipment is not included as part of the ESBWR Standard Plant design.

1.2.2.13 Station Electrical System

1.2.2.13.1 Electrical Power Distribution System

On-site power is supplied from either the plant turbine generator or an off-site power source depending on the plant operating status. During normal operation, plant loads are supplied from the main generator through the main and unit auxiliary transformers. A generator breaker allows the unit auxiliary transformers to stay connected to the grid to supply loads by backfeeding from the switchyard when the turbine is not online.

The isolated phase bus connects the main generator to the main transformer. The high voltage side of main transformer is connected to the generator breaker by aerial line. The unit auxiliary transformers connect to the off-site power system by aerial line or buried isolated cables. The unit auxiliary transformers power the metal clad switchgear via the non-segregated phase bus. This switchgear powers some large loads and load centers consisting of transformers and associated metal clad switchgear. The design includes four Isolation Power Center buses that supply the safety-related battery chargers and provide backup power to the Uninterruptible AC power supply system.

Multiple individual voltage regulating transformers supply nonsafety-related control and instrument power.

1.2.2.13.2 Electrical Penetrations

All power, control and instrument circuits that pass through the wall of the containment building do so in electrical penetration assemblies. Separate penetrations are provided for medium-voltage and low-voltage power, lighting, control, and instrument circuits.

Safety-related circuit separation groups designated Division 1, 2, 3, 4, and nonsafety-related circuits run through separate penetration assemblies. These penetrations are located so that the physical separation is maintained between separation groups.

Electrical penetrations are provided for conduit and other raceways between fire areas, and the bottom entry through fire barriers into panels and switchgear. Fire integrity is maintained between fire areas by filling the penetration area around cables and around the raceway with a

fire retardant material. Penetrations in radiation areas are offset on each side of the barrier to prevent radiation streaming through the penetration.

Additional details on electrical penetrations are provided in Section 8.3.

1.2.2.13.3 Direct Current Power Supply

The plant Direct Current Power Supply System (DCPSS) consists of four independent 250 V DC safety-related power supply subsystems, one each for divisions 1, 2, 3 and 4, and five independent nonsafety-related power supply subsystems consisting of three 250 V DC power supply subsystems and two 125 V DC power supply subsystems.

The safety-related DC power supply subsystem provides power to the safety-related Uninterruptible AC buses through inverters and to the loads required for safe shutdown.

Each of the four divisions of safety-related DC power supply subsystems is separate and independent. These DC subsystems operate ungrounded (with ground detection circuitry) for increased reliability. Each division has a battery and a battery charger fed from its divisional 480V Isolation Power Center. There is a standby battery charger for charging the batteries of each division. This system is designed so that no single failure in any division prevents safe shutdown of the plant.

During a total loss of off-site power, the safety-related system is powered automatically from two nonsafety-related standby onsite AC power supplies. If these are not available, each safety-related division isolates itself from the nonsafety-related system, and power to safety-related loads is provided uninterrupted by the safety-related batteries. In all divisions, the safety-related batteries are divided into two groups that are sized to power various safety-related loads for a period of 72 hours

The safety-related DC power supply subsystem is designed to permit periodic testing for operability and functional performance to ensure that the full operational sequence transfers power and brings the system into operation.

The nonsafety-related DC power supply subsystem is normally supplied through nonsafety-related battery chargers from the nonsafety-related power centers. In the event that this power supply is lost, power is supplied from the nonsafety-related batteries. The nonsafety-related batteries are sized for a 2-hour duty cycle.

The nonsafety-related DC buses also supply power to the nonsafety-related inverters.

1.2.2.13.4 Standby On-Site AC Power Supply

Two separate nonsafety-related ancillary diesel generators are located on-site to provide separate sources of on-site power for certain Regulatory Treatment of Non-Safety System (RTNSS) fuctions after the first 72 hours of a design basis accident. Subsection 8.3.1.1.9 and Appendix 19A provides additional details. These ancillary diesel generators are Seismic Category II and are located in the Ancillary Diesel Generator Building, which is also Seismic Category II.

Two separate nonsafety-related standby on-site diesel generators provide separate sources of on-site power for various load groups when the normal and alternate preferred power supplies are not available. The standby on-site AC power supply system is configured to provide power to the permanent nonsafety-related buses.

Either the main generator or the normal preferred off-site power source normally energizes the plant buses. Transfer to the on-site standby diesel generators is automatic when all other power supplies capable of feeding the buses are not available. Should these power supplies fail, their supply breakers trip and the standby on-site power supply (diesel generators) is automatically signaled to start. After the standby voltage and frequency reach normal values, the standby supply breakers close. After bus voltage is reestablished, large motor loads are sequentially started.

On a defense-in-depth basis, the Standby On-Site AC Power Supply system can provide power to important safety-related loads. However, these loads are powered by uninterruptible power supplies (for AC loads) or safety-related DC power from safety-related station batteries if the preferred power supply or the Standby On-Site AC Power Supply is not available.

1.2.2.13.5 Uninterruptible AC Power Supply

The safety-related uninterruptible power supply (UPS) provides redundant, reliable power to the safety-related logic and control functions during normal, upset and accident conditions.

Each of the four divisions of this safety-related uninterruptible power is separate and independent. Each division is powered from an inverter supplied from the divisional Isolation Power Center and the safety-related DC bus. The DC bus receives its power from a divisional battery charger and battery.

The nonsafety-related uninterruptible power supply system for the two power-distribution load groups in the plant is supplied from the 480 V AC power center in the same group. In addition, there is another uninterruptible power supply system used to supply the N-DCIS loads.

Two dedicated uninterruptible power supply systems supply the Technical Support Center (TSC).

1.2.2.13.6 [Deleted]

1.2.2.13.7 Communications System

The Communications System includes a plant page/party-line (PA/PL) system, the private automatic branch telephone exchange (PABX), a sound-powered telephone system, an in-plant radio system and the evacuation alarm and remote warning system.

1.2.2.13.8 Lighting Power Supply

The lighting systems include: the normal, standby, emergency, security and MCR emergency lighting systems. The normal lighting system provides illumination under all normal plant conditions, including maintenance, testing, and refueling operations. It is powered from the nonsafety-related buses. The standby lighting system supplements the normal lighting system and supplements the emergency lighting system in selected areas of the plant. The standby lighting system is normally supplied power from the main generator or the off-site power system, or alternately from the standby on-site AC power supply system. The normal, emergency and standby lighting systems are nonsafety-related. See Section 9.5.3 for a detailed description.

Upon loss of the normal lighting system, the emergency lighting system provides illumination in areas where emergency operations are performed (e.g., main control room, remote shutdown station, battery rooms, local control stations, ingress/egress routes). It includes self-contained DC battery-operated units for exit and stair lighting. The illumination ranges of lighting systems in all areas of the plant comply with Illuminating Engineering Society of North America standards.

The emergency lighting system is supplied from the four divisions of safety-related Uninterruptible AC power system. The emergency lighting fixtures and the raceways carrying cables to the fixtures inside the main control room are supported by Seismic Category I Support.

The security lighting system is described in separate security documents. Refer to Section 13.6.

1.2.2.14 Power Transmission

The interface point between the ESBWR design and the design for the normal preferred power supply occurs at the high voltage terminals of the main generator circuit breaker (switchyard side) and the high voltage terminals of the unit auxiliary transformers after a common tie point. The interface for the alternate preferred power supply occurs at the high voltage terminals of the reserve auxiliary transformers. See Subsection 8.2.3 for additional information on the interface requirements for the power transmission system.

1.2.2.15 Containment and Environmental Control Systems

1.2.2.15.1 Containment System

The ESBWR containment, centrally located in the Reactor Building, features the same basic pressure suppression design concept previously applied in over three decades of BWR power generating reactor plants. The containment consists of a steel-lined, reinforced concrete containment structure in order to fulfill its design basis as a fission product barrier at the pressure conditions associated with a postulated pipe rupture.

Main features include the upper and lower drywell surrounding the RPV and a wetwell containing the suppression pool that serves as a heat sink during abnormal operations and accidents.

The containment is constructed as a right circular cylinder set on the reinforced concrete base mat of the reactor building. The drywell and wetwell design conditions are provided in Section 6.2.

The drywell comprises two volumes: an upper drywell volume surrounding the upper portion of the RPV and housing the steam and feedwater piping, the SRVs, GDCS pools, main steam drain piping and upper drywell coolers; and a lower drywell volume surrounding the lower portion of the RPV, housing the FMCRDs, neutron monitoring system, equipment platform, lower drywell coolers and two drywell sumps. The drywell top opening is enclosed with a steel head removable for refueling operations.

The gas space above the suppression pool serves as the LOCA blowdown reservoir for the upper and lower drywell nitrogen and non-condensable gases that pass through the twelve drywell-to-wetwell vertical vents, each with three horizontal vents located below the suppression pool

surface. The suppression pool water serves as the heat sink to condense steam released into the drywell during a LOCA or steam from SRV actuations.

Access into the upper and lower drywells is provided through a double sealed personnel lock and an equipment hatch. The equipment hatch is removable only during refueling or maintenance outages. A hatch located in the Reactor Building provides access into the wetwell.

During plant startup, the Containment Inerting System, in conjunction with the containment purge system and the drywell cooling fans, is utilized to establish an inert gas environment in the containment with nitrogen to limit the oxygen concentration. This precludes combustion of any hydrogen in the drywell or wetwell that might be released subsequent to a LOCA. After the containment is inerted and sealed for plant power operation, small flows of nitrogen gas are added to the drywell and the wetwell as necessary to keep oxygen concentrations below 4% and to maintain a positive pressure for preventing air in-leakage. High-pressure nitrogen is also used for pneumatic controls inside the containment to preclude adding air to the inert atmosphere.

The containment structure has the capability to maintain its functional integrity at the pressures and temperatures that could follow a LOCA pipe break postulated to occur simultaneously with loss of off-site power. The containment structure is designed to accommodate the full range of loading conditions associated with normal and abnormal operations including LOCA-related design loads in and above the suppression pool (including negative differential pressure between the drywell, wetwell and the remainder of the Reactor Building), and safe shutdown earthquake (SSE) loads.

The containment structure is protected from, or designed to withstand, fluid jet forces associated with outflow from the postulated rupture of any pipe within the containment.

The containment design does not consider or utilize leak-before-break (LBB) applicability with regard to protection against dynamic effects associated with a postulation of rupture in high-energy piping. Protection against the dynamic effects caused by piping system failures is provided for the drywell structure. The drywell structure is provided protection against the dynamic effects of plant-generated missiles (Section 3.5).

The containment structure has design features to accommodate flooding to sufficient depth above the top of active fuel to permit safe removal of fuel assemblies from the reactor core after a postulated design basis accident (DBA).

The containment structure is configured to channel flow from postulated pipe ruptures in the drywell to the suppression pool through vents submerged in the suppression pool, which are designed to accommodate the energy of the blowdown fluid.

The containment structure and penetration isolation system, with concurrent operation of other accident mitigation systems, are designed to limit fission product leakage during and following a postulated DBA to values well below leakage calculated for allowable off-site doses.

In accordance with Appendix J to 10 CFR 50, the containment design includes provisions for testing at a reduced pressure below the peak calculated DBA LOCA pressure to confirm containment leakage is below the design limit. Special testing capabilities are provided during outages to measure local leakage, such as individual air locks, hatches, drywell head, piping, electrical penetrations and instrument penetrations. Other features are provided to measure isolation valve leakage and to measure the integrated containment leak rate. Results from the

individual and integrated preoperational leak rate tests are recorded for comparison with subsequent periodic leak rate test results.

The design value for a maximum steam bypass leakage between the drywell and the wetwell through the diaphragm floor including any leakage through the wetwell-to-drywell vacuum breakers is limited. Satisfying this limit is confirmed by initial preoperational tests as well as by periodic tests conducted during refueling outages. These tests are conducted at differential pressure conditions between the drywell and wetwell that do not clear the drywell-to-wetwell horizontal vents.

A watertight barrier is provided between the open reactor and the drywell during refueling. This enables the reactor well to be flooded prior to removal of the reactor steam separator and dryer assembly, and to facilitate underwater fuel handling operations. Piping, cooling air ducts and return air vent openings in the reactor well platform must be removed, vents closed and sealed watertight before filling the reactor well with water. The refueling bellows assembly is provided to accommodate the movement of the vessel caused by operating temperature variations and seismic activity.

Containment isolation is accomplished with inboard and outboard isolation valves on each piping penetration that are signaled to close on predefined plant parameters. Systems performing a post-LOCA function are capable of having their isolation valves reopened as needed.

Drywell coolers are provided to remove heat released into the drywell atmosphere during normal reactor operations.

1.2.2.15.2 Containment Vessel

The containment structure is a reinforced concrete containment vessel (RCCV). The RCCV supports the upper pools whose walls are integrated into the top slab of the containment to provide structural capability for LOCA and testing pressures.

1.2.2.15.3 Containment Internal Structures

The containment system's principal internal structure consists of the structural barrier separating the drywell from the wetwell. This barrier is comprised of the wetwell ceiling (diaphragm floor) and the inboard wall (vertical vent wall) separating the drywell from the wetwell. Both of these structural components are designed as steel structures filled with concrete. The vertical vent wall also provides a durable attachment point for the RPV horizontal stabilizers.

An all-steel reactor shield wall of appropriate thickness is provided, which surrounds the RPV to reduce gamma radiation shine on drywell equipment during reactor operation and protect personnel during shutdowns for maintenance and inservice inspections. The RPV insulation is supported from the internal surface of the reactor shield wall. The reactor shield wall is supported on top of the pedestal support structure.

Various drywell piping and equipment support structures are provided to support electric and instrument cable trays, drywell coolers, air distribution ductwork, steam and feedwater piping, and SRV discharge piping. Support is provided for isolation valves and piping of the ICS and PCCS. These miscellaneous steel structures also support access stairs, walkways, railings and gratings. Monorails are suspended from the ceiling of the drywell for hoists to work on Nuclear Steam Supply System (NSSS) equipment.

1.2.2.15.4 Passive Containment Cooling System

The Passive Containment Cooling System (PCCS) maintains the containment within its pressure limits for design basis accidents such as a LOCA. The system is passive, and requires no moving components for initiation or operation.

The PCCS consists of six low pressure, independent steam condenser modules (passive containment cooling condensers) that condense steam on the tube side and transfer heat from the drywell to water in a large cooling pool (IC/PCCS pool), which is vented to the atmosphere.

Each PCCS condenser is located in a subcompartment of the IC/PCCS pools. The IC/PCCS pool subcompartments on each side of the Reactor Building communicate at their lower ends to enable full use of the collective water inventory, independent of the operational status of any given PCCS condenser.

Each condenser, which is an integral part of the containment, contains a drain line to the GDCS pool and a vent discharge line, the end of which is submerged in the pressure suppression pool.

The PCCS condensers are driven by the pressure difference created between the containment drywell and the wetwell during a LOCA. Consequently, they require no sensing, control, logic or power actuated devices for operation.

PCCS vent fans are teed off of each PCCS vent line and exhaust to the GDCS pools. The fans aid in the long-term removal of non-condensable gas from the PCCS for continued condenser efficiency.

The PCCS is classified as safety-related and Seismic Category I.

Together with the pressure suppression containment system, the six PCCS condensers limit containment pressure to less than its design pressure. The initial IC/PCCS pool volume, combined with the additional water volume that is tied in automatically from the Equipment Storage Pool and Reactor Well, provides sufficient water volume for at least 72 hours after a LOCA without external make-up to the IC/PCCS pools.

The PCCS condensers are an integral part of the containment boundary. Therefore, there are no containment isolation valves and they are always in “ready standby”.

The PCCS can be periodically pressure-tested as part of overall containment pressure testing. The PCCS condensers can be isolated for individual pressure testing during maintenance.

During refueling outages, in-service inspection (ISI) of PCCS condensers can be performed, if necessary. Ultrasonic testing of tube-to-drum welds and eddy current testing of tubes can be done with PCCS condensers in place.

The safety-related monitored parameters for the IC/PCCS pools are pool water level and pool radiation. IC/PCCS expansion pool water level monitoring is a function of the FAPCS, which is addressed in Subsections 1.2.2.6.2 and 9.1.3. IC/PCCS expansion pool radiation monitoring is a function of the PRMS, which is addressed in Subsection 1.2.2.3.1 and Section 11.5.

1.2.2.15.5 Containment Inerting System

The Containment Inerting System is designed to establish and maintain an inert atmosphere within the containment during all plant operating modes, except during plant shutdown for refueling or equipment maintenance and during limited periods of time to permit access for

inspection at low reactor power. The objective of the system is to establish conditions that help preclude combustion of hydrogen and thereby prevent damage to safety-related equipment and structures.

The Containment Inerting System does not perform any safety-related function except for its containment isolation function. Failure of the Containment Inerting System does not compromise any safety-related system or component nor does it prevent a safe shutdown of the plant. The containment inerting process is a nonsafety-related readiness function, which is not used after the initiation of an accident, and thus, the Containment Inerting System is not a safety-related system.

The Containment Inerting System establishes an inert atmosphere (i.e., a very low oxygen concentration by volume) throughout the containment following an outage (or other occasions when the containment has become filled with air) and maintains it inert during normal conditions. The system maintains a slight positive pressure in the containment to prevent air (oxygen) in-leakage.

The Containment Inerting System is comprised of a pressurized liquid nitrogen storage tank, a steam-heated main vaporizer for large nitrogen flow, electric heater for vaporizing makeup flow, injection and exhaust lines, a bleed line, associated valves, controls, and instrumentation. All Containment Inerting System components are located inside the reactor building except the liquid nitrogen storage tank and the steam-heated main vaporizer, which are located in the yard.

The first of the injection lines is used only for makeup. It includes an electric heater to vaporize the nitrogen and to regulate the nitrogen temperature to acceptable injection temperatures. Remotely operated valves together with a pressure-reduction valve enable the operator to accomplish low rates of nitrogen injection into the drywell and wetwell airspace.

The second injection line is used when larger inerting flow rates are required. This line takes vaporized nitrogen from the steam-heated main vaporizer, uses remotely operated valves together with a pressure-reduction valve and injects nitrogen at points in common with makeup supply. The inerting and makeup lines converge to common injection points in the upper drywell and wetwell airspace.

The Containment Inerting System includes exhaust lines leading from the lower drywell and wetwell airspace at the opposite side from the injection points. The discharge line connects to the Reactor Building HVAC system exhaust where exhaust gases are processed by exhaust fans, filters, and radiation monitors before being diverted to the Reactor/Fuel Building stack. A small bleed line bypassing a short portion of the main exhaust line, upstream of the fans, filters, and stack monitors, is also provided for manual pressure control of the containment during normal reactor heatup. For severe accident overpressure protection, a smaller branch line from the wetwell airspace is provided that consists of two manual containment isolation valves, which are operated using bottled air. This discharge line will maintain structural integrity when subjected to severe accident containment pressures.

Redundant containment isolation valves provided in the inerting, makeup, exhaust and bleed lines close automatically upon receipt of an isolation signal from the LD&IS.

Upstream of the pressure-reduction valve in the makeup line, a small branch line is provided and connected to the HPNSS. This line is used for the initial charging of the HPNSS and for makeup to keep the HPNSS charged with nitrogen during normal plant operation.

During plant startup, a large flow of nitrogen from the liquid nitrogen storage tank is vaporized by the steam-heated vaporizer and injected into the drywell and the wetwell airspace. It is then mixed into the containment atmosphere by the drywell cooling fans. The exhaust line is kept open to displace containment resident atmosphere with nitrogen. Once the desired concentration of nitrogen is reached, the exhaust line is allowed to close. When the required inerted containment operating pressure is attained, the inerting process is terminated by the closure of the nitrogen supply shutoff valve and inerting isolation valves. The system is designed to inert the containment to ≤ 4% oxygen by volume within four hours and to ≤ 2% oxygen in the next eight hours. In the longer term, the system is required to maintain the containment atmosphere at less than 3% oxygen by volume during normal operation.

Following shutdown, the containment atmosphere is de-inerted to allow safe personnel access inside the containment. Breathable air from the Reactor Building HVAC system is injected to the drywell and wetwell airspace through the inerting injection line. The incoming air displaces containment gases (mostly nitrogen) into the exhaust line. The Reactor Building HVAC system exhaust fans, filters, and radiation detectors remove vented gases before diverting them to the Reactor/Fuel Building stack. The system is designed to de-inert the containment to an oxygen concentration of ≥ 19% within twelve hours.

1.2.2.15.6 Drywell Cooling System

The Drywell Cooling System (DCS) consists of four fan coil units (FCUs), two located in the upper drywell, and two in the lower drywell. The system uses the FCUs to deliver cooled air/nitrogen to various areas of the upper and lower drywell through ducts/diffusers. The DCS is a closed loop air/nitrogen recirculation-cooling system where no outside air is introduced into the system except when the containment is open. The DCS is manually controlled from the MCR. The DCS is cooled by the Chilled Water System (CWS).

Through the entire plant operating range, from startup to full load condition or from full load to shutdown, the DCS performs the following functions:

- Maintains temperature in the upper and lower drywell spaces within specified limits during normal operation;
- Accelerates drywell cooldown during the period from hot reactor shutdown to cold shutdown;
- Aids in complete purging of nitrogen from the drywell during shutdown;
- Maintains a habitable environment for plant personnel during plant shutdowns for refueling and maintenance; and
- Limits drywell temperature during loss of preferred power (LOPP).

The DCS is designed to maintain conditions in the upper and lower drywell during normal and plant shutdown modes of operation.

There are two direct-drive fans in each FCU. Each FCU motor can be controlled manually from the MCR. Indicator lights show the status of each unit. Failure of an FCU with consequent temperature rise in the discharge stream or loss of flow actuates an alarm in the MCR.

Each upper drywell FCU provides a cooling capacity of 50% of the upper drywell design cooling load under normal plant operating conditions. Likewise, each lower drywell FCU provides a cooling capacity of 50% of the lower drywell design cooling load. All FCUs normally operate. Each FCU is composed of a cooling coil and two fans downstream of the coil. One of the fans operates while the other is on standby status. The standby fan automatically starts upon loss of the lead fan. During normal operation, if both fans of an FCU are out of commission, or the unit is not in service for some other reason, then both fans on the other unit in the area (upper or lower drywell) operate.

Cooled air/nitrogen leaving the FCUs enters a common plenum and is distributed to the various zones in the drywell through distribution ducts. Return ducts are also provided. The FCUs draw air/nitrogen directly from the upper or lower drywell.

A condensate collection pan is provided with each FCU. The condensate collected from all FCUs in the upper and the lower drywell is piped to an LD&IS flow meter to measure the condensation rate of unidentified leakages.

1.2.2.15.7 Containment Monitoring System

The Containment Monitoring System (CMS) provides the following functions:

- Drywell and Wetwell – Hydrogen, Oxygen concentrations and Gamma radiation levels Monitoring;
- Drywell and Wetwell Pressure Monitoring;
- Drywell/Wetwell Differential Pressure Monitoring;
- Upper Drywell Level Monitoring;
- Suppression Pool Water Level Monitoring;
- Suppression Pool Temperature Monitoring;
- Transmission of signals from dewpoint sensors that are used in Integrated Leak Rate Tests (ILRT); and
- Lower Drywell (Post-LOCA) Pool Level Monitoring.

The safety-related portions of the CMS are Seismic Category I. Power to each safety-related subsystem is provided from uninterruptible safety-related 120 VAC divisional sources.

Containment atmospheric and drywell monitoring:

The Containment Monitoring System (CMS) has two nonsafety-related independent redundant channels to monitor the gamma radiation dose rate and the concentrations of hydrogen and oxygen in the drywell and wetwell air during plant operation and following an accident. The channels, which measure gamma radiation in the drywell and wetwell air, are continuously displayed in the MCR.

The drywell pressure instruments provide signals to the Leak Detection and Isolation System (LD&IS) and the Reactor Protection System (RPS). A drywell pressure increase above normal values indicates the presence of reactor coolant leakage.

Safety-related differential pressure transmitters and nonsafety-related water level transmitters are connected between the drywell and the wetwell to measure differential pressure and containment flooding level, respectively, in case of a severe accident. The differential pressure instruments are also used for post-accident monitoring indications.

Two nonsafety-related channels of water level instrumentation monitor the Upper Drywell.

Two safety-related divisions of water level instrumentation monitor the Lower Drywell sump level. Four safety-related divisions of water level instrumentation monitor the buildup of water in the Lower Drywell during a LOCA.

Nonsafety-related dew point elements are located throughout the drywell and are used for containment absolute pressure calculations during containment integrated leak rate testing (ILRT).

In the post-accident operational mode, the function of the CMS is to continuously sample the oxygen and hydrogen contents in the containment, and display the results in the main control room. If the CMS indicates the presence of a potentially explosive gas mixture in the containment, the operator may use this information to assess containment integrity.

Suppression pool monitoring:

The Suppression Pool Temperature Monitoring (SPTM) portion of CMS measures the suppression pool temperature and transmits the information to the Safety System Logic and Control (SSLC). The SSLC then averages the temperatures and sends the average bulk temperature to the Reactor Protection System (RPS) for reactor scram. The SPTM sends a signal to the Fuel and Auxiliary Pools Cooling System (FAPCS) to initiate the suppression pool cooling and cleaning function when necessary. The SPTM consists of four redundant divisions with four levels of temperature elements within each division.

Suppression pool water level monitoring is provided to measure the inventory of suppression pool water. The suppression pool water level is monitored during all plant operating conditions and post accident conditions. Suppression pool water level monitoring consists of ten channels of water level detection sensors distributed into four safety-related narrow range and four wide-range instruments. The narrow-range suppression pool water level signals are used to detect the uncovering of the first set of suppression pool temperature sensors below the pool surface.

When the suppression pool water level drops below the elevation of a particular set of temperature sensors, those sensor signals are not used in computing the average pool temperature.

Suppression pool temperature and level indications are displayed in the Main Control Room (MCR).

Two of the wide-range water level signals are used for displaying water level on the Remote Shutdown System panels.

1.2.2.16 Structures and Servicing Systems

1.2.2.16.1 Cranes, Hoists, and Elevators

Large bridge cranes are provided in the Turbine Building, Fuel Building, Radwaste Building, and Reactor Building. Miscellaneous hoists and monorails are installed in the reactor, turbine and other buildings as necessary for maintenance and replacement of equipment. Elevators are installed in the reactor, turbine and other buildings as necessary.

1.2.2.16.2 Heating Ventilating and Air Conditioning

Reactor Building HVAC System (RBVS)

The RBVS includes the Clean Area HVAC Subsystem (CLAVS), Contaminated Area HVAC Subsystem (CONAVS) and Refueling and Pool Area HVAC Subsystem (REPAVS). The CLAVS serves areas considered to be clean (not potentially contaminated) during normal plant operation, plant start-up and plant shutdown. The CONAVS serves areas considered to be potentially contaminated during normal plant operation, plant start-up and plant shutdown. The REPAVS serves the refueling area during normal plant operation, plant start-up and plant shutdown. The RBVS subsystems do not perform any safety-related functions, except for automatic isolation of the building during accidents. Thus, all subsystems are classified as nonsafety-related, except for the dampers providing automatic isolation of the building during a potential radiological release event.

Control Building HVAC System (CBVS)

The CBVS includes the Control Room Habitability Area HVAC Subsystem (CRHAVS) and the Control Building General Area HVAC Subsystem (CBGAVS). The CBGAVS is nonsafety-related and performs no safety-related functions. Portions of the CRHAVS are safety-related. The Control Room Habitability Area (CRHA) envelope, the Emergency Filter Units (EFU), related ductwork, dampers, instrumentation, and controls are safety-related. The remaining portion of the CRHAVS is nonsafety-related. The CRHAVS serves the CRHA (Main Control Room and associated areas) during normal plant operation, emergency operation, plant start up and plant shutdown. The CBGAVS serves the general areas of the Control Building during normal plant operation, plant start-up and plant shutdown. The CRHAVS contains a redundant set of EFUs, capable of being powered by safety-related batteries for the 72-hour passive duration, which supply breathing and pressurization air to the CRHA during a potential radiological release event concurrent with a station blackout.

Turbine Building HVAC System (TBVS)

The TBVS includes outside air intake louvers, dampers, filters, heating and cooling coils and three 50% capacity supply fans. The Balance-of-Plant Chilled Water Subsystem provides chilled water to local unit coolers and outside air intake coils when required. Three 50% capacity exhaust fans are provided. Local unit coolers and fans are provided in areas with high local heat loads. The system is nonsafety-related.

Fuel Building HVAC System (FBVS)

The FBVS includes the Fuel Building General Area HVAC Subsystem (FBGAVS) and Fuel Building Fuel Pool Area HVAC Subsystem (FBFPVS). The FBGAVS serves the general areas

of the Fuel Building during normal plant operation, plant start up and plant shutdown. The FBFPVS serves the spent fuel storage pool and equipment areas during normal plant operation, plant start up and plant shutdown. The FBVS subsystems do not perform any safety-related functions, except for automatic isolation of the building during accidents. Thus, both subsystems are classified as nonsafety-related, except for the dampers providing automatic isolation of the building during a potential radiological release event.

Other Building HVAC

Ventilation for other buildings includes the Radwaste Building, Electrical Building, Service Building, Service Water Building, Administration Building, and guard house. All these systems are nonsafety-related, of conventional design and typically include redundant supply and exhaust fans, and air conditioning units. The Radwaste Building ventilation system also includes additional filtration and airborne radioactivity monitoring equipment.

1.2.2.16.3 Fire Protection System

The Fire Protection System (FPS) includes the fire protection water supply system, yard piping, water sprinkler, standpipe and hose systems, foam systems, smoke detection and alarm systems, and fire barriers.

Manual backups are provided for each of the automatic fire suppression systems, including two 100% capacity, fire water supplies.

The water supply system includes two motor-driven pumps and two backup diesel-engine-driven pumps. Fire water is supplied to all buildings. Fire hydrants are located throughout the site. Standpipes are provided within buildings as well as automatic sprinkler and deluge systems. Foam fire suppression systems are provided for the standby diesel generator and day tank rooms, outdoor diesel fuel oil storage tanks, and the turbine lube oil system and storage tanks. Smoke and heat detectors are located throughout the various buildings and are controlled by local panels and provide remote indication in the MCR.

The FPS is nonsafety-related. However, one source of fire water supply, two of the fire pumps, and the fire water main leading to and including the standpipes and systems for areas containing safe shutdown equipment are analyzed to withstand the effect of a Safe Shutdown Earthquake (SSE). These remain functional during and after an SSE.

A portion of the water stored in the FPS storage tanks provides makeup water to the IC/PCCS and spent fuel pools during design basis events. The makeup water used for this purpose is stored in Seismic Category I tanks. The amount of water reserved for this function is based on providing makeup water from 72 hours to 7 days after a design basis event that is initiated from 100% of rated core thermal power. Piping that is part of the FAPCS is used to transport this makeup water to the IC/PCCS and spent fuel pools. See Subsections 9.1.3 and 9.5.1 for additional details.

1.2.2.16.4 Equipment and Floor Drainage System

The Equipment and Floor Drain System (EFDS) consists of liquid waste collection piping, equipment drains, floor drains, vents, traps, cleanouts, collection sumps, sump pumps, tanks, valves, controls and instrumentation. The EFDS serves plant buildings (i.e., Reactor Building, Control Building, Fuel Building, Turbine Building, Electrical Building, Service Building,

Radwaste Building and Service Water Building) with floor and equipment drains and consists of the following drain subsystems: clean, low conductivity waste (LCW), high conductivity waste (HCW), detergent, and chemical waste. All potentially radioactive drains are routed to the Liquid Waste Management System for processing.

The EFDS is nonsafety-related except for containment penetrations, isolation valves, and level switches for initiating containment isolation.

1.2.2.16.5 Reactor Building

The Reactor Building (RB) (Figures 1.2-1 through 1.2-11) houses the reactor system, reactor support and safety systems, concrete containment, safety-related power supplies and equipment, steam tunnel and refueling area. On the upper floor of the RB are the new fuel pool and small, spent fuel storage area, equipment storage pool, refueling and fuel handling systems, and the upper connection to the inclined fuel transfer system. The isolation condenser/passive containment cooling system pools are below the refueling floor. The RB shares a common wall and sits on a large common basemat with the Fuel Building. The RB is a Seismic Category I structure. The building is partially embedded.

1.2.2.16.6 Control Building

The Control Building (CB) (Figures 1.2-2 through 1.2-5 and Figure 1.2-11) houses the safety-related electrical, control and instrumentation equipment, the control room for the Reactor and Turbine Buildings, and the CB HVAC equipment. The CB is a Seismic Category I structure that houses control equipment and operation personnel.

1.2.2.16.7 Fuel Building

The Fuel Building (FB) (Figures 1.2-1 through 1.2-8 and Figure 1.2-10) contains the spent fuel pool, cask loading area, fuel equipment and storage areas, lower connection to the inclined fuel transfer system, and other plant systems and equipment. The FB is a Seismic Category I structure except for the penthouse that houses HVAC equipment. The penthouse is a Seismic Category II structure. The FB is integrated with the RB, sharing a common wall between the RB and the FB and a large common foundation mat. The building is partially embedded.

1.2.2.16.8 Turbine Building

The Turbine Building (TB) (Figures 1.2-12 to 1.2-20) encloses the turbine-generator, main condenser, condensate and feedwater systems, condensate purification system, offgas system, turbine-generator support systems and bridge crane. The TB is a Seismic Category II nonsafety-related structure. The building is partially embedded. Shielding is provided for the turbine on the operating deck.

1.2.2.16.9 Radwaste Building

The Radwaste Building (RW) (Figures 1.2-21 to 1.2-25) houses the equipment and floor drain tank(s), sludge phase separator(s), resin hold up tank(s), detergent drain collection tank(s), concentrated waste tank(s), chemical drain collection tank(s), associated pumps and systems for the radioactive liquid and solid waste treatment systems. Tunnels connect the Radwaste Building to the reactor, fuel and turbine buildings. The RW is a Non-Seismic Category structure.

The RW is designed according to the safety classification defined in Regulatory Guide 1.143 as Category RW-IIa. The building is partially embedded.

1.2.2.16.10 Other Building Structures

The Electrical Building (Figures 1.2-26 through 1.2-33) houses the two nonsafety-related standby diesel generators, associated supporting systems and equipment, and nonsafety-related power supplies. The Electrical Building also provides space for the Technical Support Center. The building is nonsafety-related and Seismic Category NS.

The Service Water Building houses the PSWS pumps and associated water storage, piping and valves. The building is nonsafety-related and Seismic Category NS.

The Ancillary Diesel Building houses the ancillary diesel generators and their associated support systems. This building is nonsafety-related and Seismic Category II.

The Firewater Service Complex consists of two fire water storage tanks and a fire pump enclosure that share a common basemat. This structure is nonsafety-related and Seismic Category I.

Other facilities typically include the Service Building, the Water Treatment Building, Administration Building, Training Center, Sewage Treatment Plant, warehouse, and hot and cold machine shops. These are all of conventional size and design, and in some cases may be shared with other units at the same plant site.

1.2.2.17 Intake Structure and Servicing Equipment

1.2.2.17.1 Intake and Discharge Structures

The intake and discharge structures are nonsafety-related. Requirements for the intake and discharge structure are established to support the design of the Circulating Water System, which is discussed in Subsection 10.4.5.

1.2.2.18 Yard Structures and Equipment

1.2.2.18.1 Oil Storage and Transfer System

The major components of this system are the fuel-oil storage tank(s), pump(s), and day tank(s). Each standby diesel generator has its own individual supply components. Each fuel-oil pump is controlled automatically by day-tank level and feeds its day tank from the storage tank.

1.2.2.18.2 Site Security

The site security system typically includes features such as perimeter fencing, intrusion detection systems, vehicle barrier systems, closed circuit television equipment, defensive firing positions, site access control equipment (e.g., portal monitors, identification equipment, x-ray equipment), electronic lock/card reader building access control equipment, vehicle inspection bays, and computer-based monitoring and control stations as required to comply with the site security plan. The site security plan and requirements for the Site Security System are discussed in Section 13.6.

1.2.3 COL Information

There are no COL Applicant items specific to this section of the DCD. Items to be provided by the COL Applicant are defined in subsequent chapters that go into more detail about plant systems.

1.2.4 References

None.

Figure 1.2-1. Nuclear Island Plan at Elevation –11500

{{{Security-Related Information - Withheld Under 10 CFR 2.390.}}}

Figure 1.2-2. Nuclear Island Plan at Elevation –6400

{{{Security-Related Information - Withheld Under 10 CFR 2.390.}}}

Figure 1.2-3. Nuclear Island Plan at Elevation –1000

{{{Security-Related Information - Withheld Under 10 CFR 2.390.}}}

Figure 1.2-4. Nuclear Island Plan at Elevation 4650

Figure 1.2-5. Nuclear Island Plan at Elevation 9060

{{{Security-Related Information - Withheld Under 10 CFR 2.390.}}}

Figure 1.2-6. Nuclear Island Plan at Elevation 13570

{{{Security-Related Information - Withheld Under 10 CFR 2.390.}}}

Figure 1.2-7. Nuclear Island Plan at Elevation 17500

{{{Security-Related Information - Withheld Under 10 CFR 2.390.}}}

Figure 1.2-8. Nuclear Island Plan at Elevation 27000

{{{Security-Related Information - Withheld Under 10 CFR 2.390.}}}

Figure 1.2-9. Nuclear Island Plan at Elevation 34000

{{{Security-Related Information - Withheld Under 10 CFR 2.390.}}}

Figure 1.2-10. Nuclear Island Elevation Section A-A

Figure 1.2-11. Nuclear Island Elevation Section B-B

{{{Security-Related Information - Withheld Under 10 CFR 2.390.}}}

Figure 1.2-12. Turbine Building Plan at Elevation –1400

{{{Security-Related Information - Withheld Under 10 CFR 2.390.}}}

Figure 1.2-13. Turbine Building Plan at Elevation 4650

{{{Security-Related Information - Withheld Under 10 CFR 2.390.}}}

Figure 1.2-14. Turbine Building Plan at Elevation 12000

{{{Security-Related Information - Withheld Under 10 CFR 2.390.}}}

Figure 1.2-15. Turbine Building Plan at Elevation 20000

Figure 1.2-16. Turbine Building Plan at Elevation 28000

{{{Security-Related Information - Withheld Under 10 CFR 2.390.}}}

Figure 1.2-17. Turbine Building Plan at Elevation 35000

Figure 1.2-18. Turbine Building Plan at Elevation Various

{{{Security-Related Information - Withheld Under 10 CFR 2.390.}}}

Figure 1.2-19. Turbine Building Elevation Section A-A

Figure 1.2-20. Turbine Building Elevation Section B-B

{{{Security-Related Information - Withheld Under 10 CFR 2.390.}}}

Figure 1.2-21. Radwaste Building Plan at Elevation -9350

{{{Security-Related Information - Withheld Under 10 CFR 2.390.}}}

Figure 1.2-22. Radwaste Building Plan at Elevation -2350

{{{Security-Related Information - Withheld Under 10 CFR 2.390.}}}

Figure 1.2-23. Radwaste Building Plan at Elevation 4650

{{{Security-Related Information - Withheld Under 10 CFR 2.390.}}}

Figure 1.2-24. Radwaste Building Plan at Elevation 10650

{{{Security-Related Information - Withheld Under 10 CFR 2.390.}}}

Figure 1.2-25. Radwaste Building Elevation Section A-A

Figure 1.2-26. Electrical Building Plan at Elevation 4650

{{{Security-Related Information - Withheld Under 10 CFR 2.390.}}}

Figure 1.2-27. Electrical Building Plan at Elevation 9800

{{{Security-Related Information - Withheld Under 10 CFR 2.390.}}}

Figure 1.2-28. (Deleted)

Figure 1.2-29. Electrical Building Plan at Elevation 18000

{{{Security-Related Information - Withheld Under 10 CFR 2.390.}}}

Figure 1.2-30. (Deleted)

Figure 1.2-31. Electrical Building Plan at Elevation 27000

{{{Security-Related Information - Withheld Under 10 CFR 2.390.}}}

Figure 1.2-32. Electrical Building Plan at Elevation Various

{{{Security-Related Information - Withheld Under 10 CFR 2.390.}}}

Figure 1.2-33. Electrical Building Elevation Section A-A

1.3 COMPARISON TABLES

This section highlights the principal design features of the ESBWR and compares its major features with those of other BWR facilities. The design of this facility is based on proven technology obtained during the development, design, construction, and operation of BWRs of similar types. Comparison tables include:

- Reactor System Design Characteristics, listed in Table 1.3-1;
- Emergency Core Cooling Systems and Safety-Related Containment Cooling Systems, listed in Table 1.3-2;
- Containment Design Characteristics, listed in Table 1.3-3; and
- Structural Design Characteristics, listed in Table 1.3-4.

1.3.1 COL Information

1.3-1-A Update Table 1.3-1

The COL applicant will update the ESBWR design charactistic values identified in Table 1.3-1 based on the Combined License Application (COLA) Final Safety Analysis Report (FSAR) Chapter 10 turbine heat balance and associated Chapter 1 reactor heat balance, the COLA FSAR Chapter 4 initial core design and analysis, and the Chapter 15 safety analysis, as required. (Table 1.3-1)

Table 1.3-1
Comparison of Reactor System Design Characteristics

Design Characteristic (1) (2)	Units	ESBWR	BWR/1 Dodewaard	ABWR
Thermal and Hydraulic (Section 4.4)				
Vessel inside diameter	m (in)	7.06 (278)	2.79 (110)	7.06 (278)
Number of fuel bundles		1132	156	872
Rated power	MWt	4500	163.4	3926
Design power (ECCS design basis)	MWt	4590	196	4005
Steam flow rate	Metric ton/hr (Mlb_m/hr)	8757 (5) (19.307)	256 (0.564)	7640 (16.843)
Core coolant flow rate	Metric ton/hr (Mlb_m/hr)	34,453 (75.955)	4500 (9.92)	52,200 (115.1)
Feedwater flow rate	Metric ton/hr (Mlb_m/hr)	8736 (19.260)	~243 (~0.54)	7624 (16.807)
Absolute pressure in steam dome	MPa (psia)	7.17 (1040)	7.10 (1030)	7.17 (1040)
Average power density	kW/liter	54.3	36.3	50.6
Maximum linear heat generation rate	kW/m (kW/ft)	44.0 (13.4)	50.1 (15.3)	44.0 (13.4)
Average linear heat generation rate	kW/m (kW/ft)	15.1 (4.6)	17.8 (5.4)	20.3 (6.2)
Average heat flux	kW/m^2 ($Btu/hr\text{-}ft^2$)	458.53 (145,430)	367.57 (116,630)	524.86 (166,470)
Operating limit MCPR		1.31 (7)	N/A	1.17
Coolant enthalpy at core inlet	kJ/kg (Btu/lb_m)	1190 (511.7)	1240 (533.8)	1230 (527.7)
Maximum void fraction within fuel assemblies		0.90	0.64	0.75

Table 1.3-1

Comparison of Reactor System Design Characteristics

Design Characteristic (1) (2)	Units	ESBWR	BWR/1 Dodewaard	ABWR
Core average exit quality	% steam	25	6.6	14.5
Feedwater temperature	°C (°F)	215.6 (3) (420)	125 (257)	215.6 (420)
Design power peaking factor				
Maximum relative assembly power		1.33	1.30	1.40
Local peaking factor		1.36	1.15	1.25
Axial peaking factor		1.44	1.55	1.40
Total peaking factor		2.60	2.32	2.45
Nuclear (first core) (Section 4.3)				
Water/UO_2 volume ratio (cold)		2.90	2.6	2.95
Reactivity with highest reactivity worth control rod out	Keff	<0.99	<0.99	<0.99
Initial average U^{235} enrichment	(%)	2.08	2.50	2.22
Initial cycle exposure	MWd/MTU (MWd/STU)	11,750 (10,660)	17,600 (16,000)	10,945 (9,950)
Fuel Assembly (Section 4.2)				
Fuel rod array		10x10	6x6	8x8
Number of fuel rods per assembly		92	36	62
Fuel rod cladding material		Zircaloy-2	Zircaloy-2	Zircaloy-2
Overall length	cm (in)	379 (149)	179 (70.5)	447 (176)

Table 1.3-1

Comparison of Reactor System Design Characteristics

Design Characteristic (1) (2)	Units	ESBWR	BWR/1 Dodewaard	ABWR
Weight of UO_2 per assembly	kg (lbm)	163 (360)	68.9 (152)	197 (435)
Weight of fuel assembly (includes channel without UO_2)	kg (lbm)	78 (172)	101 (223)	109 (240)
Fuel Channel (Section 4.2)				
Thickness	mm (in)	3.05/1.91 (0.120 / 0.075)	1.5 (0.06)	2.5 (0.100)
Cross section dimension	mm (in)	140 (5.52)	110 (4.35)	139 (5.48)
Material		Zircaloy-2	Zircaloy-4	Zircaloy-4
Core Assembly (Section 4.1)				
Fuel weight as UO_2	kg (lbm)	184,867 (407,562)	10,750 (23,704)	172,012 (379,221)
Core diameter (equivalent)	mm (in)	5883 (231.6)	1788 (70.39)	5164 (203.3)
Active fuel length	mm (in)	3048 (120.0)	1793 (70.59)	3708 (146.0)
Reactor Control System (Chapters 4 and 7)				
Method of variation of reactor power		Control rods and FW temperature	Control rods	Control rods and core flow
Number of control rods		269	37	205
Shape of control rods		Cruciform	Cruciform	Cruciform
Pitch of control rods	mm (in)	309.88 (12.20)	305 (12.01)	309.88 (12.20)

Table 1.3-1

Comparison of Reactor System Design Characteristics

Design Characteristic (1) (2)	Units	ESBWR	BWR/1 Dodewaard	ABWR
Control material in rods		B_4C granules compacted in stainless steel tubes	B_4C granules compacted in stainless steel tubes	B_4C granules compacted in stainless steel tubes
Type of control rod drives		Bottom entry electric hydraulic fine motion	Bottom entry locking piston	Bottom entry electric hydraulic fine motion
Type of temporary reactivity control for initial core		Burnable poison; gadolinia urania fuel rods	Removable borated steel curtains	Burnable poison; gadolinia urania fuel rods
In-core neutron instrumentation (Chapters 4 and 7)				
Total number of LPRM detectors		256	24	208
Number of in core LPRM penetrations		64	8	52
Number of LPRM detectors per penetration (assembly)		4	3	4
Total nuclear instrument penetrations		76	20	62
Number of startup range neutron monitors		12	N/A	10
Range of power range monitors		1% - 125%	1% - 125%	1% - 125%
Number of local power range monitors		256	24	208
Number of average power range monitors (APRM) channels		4	None	4
Number and type of in-core neutron sources		6 Sb-Be or Cf-252	2	5 Sb-Be

Table 1.3-1

Comparison of Reactor System Design Characteristics

Design Characteristic (1) (2)	Units	ESBWR	BWR/1 Dodewaard	ABWR
Reactor Vessel (Section 5.3)				
Material		Low-alloy steel/ stainless and Ni-Cr-Fe Alloy clad	Low-alloy steel/stainless clad	Low-alloy steel/stainless and Ni-Cr-Fe Alloy clad
Design gauge pressure	MPa (psig)	8.62 (1250)	8.62 (1250)	8.62 (1250)
Design temperature	°C (°F)	302 (575)	302 (575)	302 (575)
Inside diameter (min)	mm (in)	7061 (278)	2794 (110)	7061 (278)
Inside height	mm (in)	27,560 (1085)	12,090 (476)	21,056 (829)
Minimum base metal thickness (cylindrical section)	mm (in)	174 (6.85)	80 (3.15)	174 (6.85)
Minimum cladding thickness	mm (in)	3.2 (~1/8)	3.175 (~1/8)	3.2 (~1/8)
Reactor Coolant Recirculation (Chapter 5)				
Number of recirculation loops		Natural circulation internal to reactor vessel	Natural circulation internal to reactor vessel	Forced recirculation internal to reactor vessel (4)
Recirculation pump flow rate	m^3/s (gpm)	N/A	N/A	1.926 (30,516) per pump
Number of jet pumps		N/A	N/A	N/A

Table 1.3-1

Comparison of Reactor System Design Characteristics

Design Characteristic (1) (2)	Units	ESBWR	BWR/1 Dodewaard	ABWR
Main Steamlines (Subsection 5.4.9)				
Number of steamlines		4	1	4
Design Pressure	MPa (psig)	8.62 (1250)	8.62 (1250)	8.62 (1250)
Design temperature	°C (°F)	302 (575)	302 (575)	302 (575)
Pipe diameter	mm (in)	750 (30)	300 (12)	711 (28)
Pipe material		Carbon steel (6)	Carbon steel	Carbon steel
Isolation Condenser (Subsection 5.4.6)				
Number of loops		4	1	N/A
Type		Vertical Tubes connected to Horizontal Drums	Shell and tube	N/A
Heat transfer/loop	MW (Btu/s)	33.75 ($3.2x10^4$)	9.8 ($9.3x10^3$)	N/A
Pool capacity		72 hours decay heat	8 hours decay heat	N/A

Notes for Table 1.3-1:

(1) Parameters are relative to rated power.
(2) ESBWR fuel and core design data in this table are representative of an equilibrium core unless otherwise specified and may be modified consistent with fuel licensing acceptance criteria described in Appendix 4B. See Subsection 1.3.1, Item 1.3-1-A.
(3) Value reported is nominal feedwater temperature at rated power conditions.
(4) ABWR uses reactor internal pumps (RIPs).
(5) Steam flow will vary somewhat with design feedwater temperature. Value shown here is for feedwater temperature of 215.6°C (420°F).

(6) Portions of the main steamlines that do not meet the 60-year design life expectation due to susceptibility to erosion corrosion or flow-accelerated corrosion will be made from low alloy steel.
(7) The OLMCPR value stated includes conservatism with respect to the calculated value.

Table 1.3-2
Comparison of Emergency Core Cooling Systems and Safety-Related Containment Cooling Systems

System	Units	ESBWR	ABWR
High Pressure ECC Systems			
High Pressure Core Flooder (HPCF)			
Number of loops		None	2
Reactor Core Isolation Cooling (RCIC)			
Number of loops		None	1
Automatic Depressurization System (Section 6.3)			
Number of SRVs		10	8
Number of DPVs		8	None
Capacity of SRVs	kg/hr (lb_m/hr)	4.5 to 5.19 x 10^6 (9.8 to 11.44 x 10^6)	2.9 x 10^6 (6.4 x 10^6)
Capacity of DPVs	kg/hr (lb_m/hr)	6.9 x 10^6 (15.2 x 10^6)	N/A
Low Pressure ECC Systems (Section 6.3)			
Low Pressure Flooder (LPFL) mode of Residual Heat Removal (RHR)			
Number of loops		None	3
Number of pumps		N/A	3
Minimum rated flow per loop	m^3/s (gpm)	N/A	0.265 (4,200)
Gravity-Driven Cooling System			
Number of loops		4 (1)	None
Number of pumps		0	N/A

Table 1.3-2
Comparison of Emergency Core Cooling Systems and Safety-Related Containment Cooling Systems

System	Units	ESBWR	ABWR
Capacity per division	m^3/s (gpm)	0.139 (2) (2200)	N/A
Containment Cooling System (Section 6.2)			
Residual Heat Removal (RHR)			
Number of loops		None	3
Number of pumps		N/A	3
Number of heat exchangers		N/A	3
Heat exchanger type		N/A	Horizontal U-Tube/Shell
Passive Containment Cooling System			
Number of pumps		0	N/A
Number of heat exchangers		6	N/A
Heat exchanger type		Vertical Tubes connected to Horizontal Drums	N/A
Heat transfer/unit	MW (Btu/s)	11.0 (3) (1.0435×10^4)	N/A
Number of cooling pools		6 (4)	N/A
Cooling pool capacity		72 hrs decay heat	N/A

Notes for Table 1.3-2:

(1) Interfacing with 3 GDCS pools.
(2) Reported GDCS flow rate is after quasi steady-state is reached with a 13.8 kPa (2 psid) back pressure.
(3) The heat transfer is based on (a) pure saturated steam condensing in the tubes at 308 kPa (45 psia), and (b) pool water at 101°C (214°F) and open to atmosphere.
(4) The PCCS pools are arranged in two sets of three subcompartments. All IC/PCCS pool subcompartments communicate at their lower ends to allow full use of the collective water inventory.

Table 1.3-3

Comparison of Containment Design Characteristics

Component (1)	Units	ESBWR	BWR/1 Dodewaard	ABWR
Primary Containment (Chapter 3)				
Type		Pressure suppression	Pressure suppression	Pressure suppression
Construction		Reinforced concrete with steel liner; steel structure	Drywell / wetwell vessel	Reinforced concrete with steel liner; steel structure
Drywell		Concrete cylinder	Steel cylinder	Concrete cylinder
Wetwell		Concrete cylinder	Two cylindrical vessels	Concrete cylinder
Wetwell internal design gage pressure	MPa (psig)	0.310 (45.0)	0.490 (71.0)	0.310 (45.0)
Drywell internal design gage pressure	MPa (psig)	0.310 (45.0)	0.490 (71.0)	0.310 (45.0)
Drywell total free volume	m^3 (ft^3)	7206 (254,477)	327 (11,548)	7,350 (259,563)
Wetwell free volume (at high water level)	m^3 (ft^3)	5467 (193,065)	426 (15,044)	5,960 (210,475)
Pressure-suppression pool water volume (at low water level)	m^3 (ft^3)	4383 (154,784)	406 (14,337)	3,580 (126,426)
Submergence of vent pipe below pressure suppression pool surface (at high water level)	m (ft)	1.95 to 4.69 (6.4 to 15.4)	1 (3.28)	3.6 to 6.3 (11.8 to 20.8)

Table 1.3-3

Comparison of Containment Design Characteristics

Component [1]	Units	ESBWR	BWR/1 Dodewaard	ABWR
Design temperature of drywell	°C (°F)	171 (340)	150 (302)	171 (340)
Leakage rate	% weight in free volume / day	0.35	0.5	0.5

Note for Table 1.3-3:

(1) Where applicable, containment parameters are based on rated power.

Table 1.3-4

Comparison of Structural Design Characteristics

Component	Units	ESBWR	ABWR
Reactor Building (Chapter 3)			
Type		Low Leakage	Controlled Leakage
Lower-Level Construction		Reinforced Concrete	Reinforced Concrete
Upper-Level Construction		Reinforced Concrete	Reinforced Concrete
Roof		Reinforced Concrete	Reinforced Concrete
Design in-leakage rate	% free volume/day	50	50 (at 0.25 in H_2O)
Seismic Design (Section 3.7)			
Safe Shutdown Earthquake	horizontal g vertical g	(1)	0.30 0.30
Wind Design (Subsection 3.3.2)			
Tornado translational	km/hr (mi/hr)	113 (70)	97 (60)
Tornado rotational	km/hr (mi/hr)	531 (330)	483 (300)

Note for Table 1.3-4:

(1) See Figures 2.0-1 and 2.0-2.

1.4 IDENTIFICATION OF AGENTS AND CONTRACTORS

1.4.1 Technical Qualifications of Applicant

In 2007, GE and Hitachi formed an alliance and GE Hitachi Nuclear Energy (GEH) became the applicant for the ESBWR. GEH is responsible for the overall design and design certification of the ESBWR nuclear power plant. In addition, GE Nuclear Energy (predecessor to GEH) was the applicant for the first design certified under 10 CFR Part 52 when the ABWR design certification rule was issued as 10 CFR Part 52, Appendix A, in May 1997 (effective June 11, 1997).

GEH has designed, developed, constructed and manufactured hardware for nuclear facilities since the 1950s, with the Dresden Unit 1 station being licensed in 1959 as the first U.S. commercial nuclear facility. As shown on Table 1.4-1, GEH has designed and delivered more than 60 commercial nuclear power plants, both domestic and international, and is involved in constructing two additional units. GEH is headquartered in Wilmington, North Carolina, with an engineering team also located in San Jose, California.

GEH has been developing advanced reactor plant designs since the 1980s, including the Advanced Boiling Water Reactor (ABWR), the PRISM sodium-cooled fast reactor, and the Simplified Boiling Water Reactor (SBWR). GEH is involved in the design and manufacturing of nuclear fuel for boiling water reactors through Global Nuclear Fuels, and has applied for a license to construct and operate a uranium enrichment facility at the Wilmington, North Carolina site.

GEH provides engineering and technical services to the fleet of operating boiling water reactors for the nuclear island, turbine island, and balance of plant equipment; plant life extension; power uprates; performance services; spare and renewal parts; outages; and inspections. GEH also provides services for spent fuel storage.

GEH has substantial, proven experience, knowledge, and capability to design, manufacture and furnish technical assistance and hardware for the installation, startup and service of nuclear power plants. GEH has the appropriate technical qualifications for designing the ESBWR.

1.4.2 Use of Contractors

Under the direction of GEH, a number of highly qualified organizations have provided design and analysis support for the ESBWR design certification application. Each contractor has a specific responsibility to GEH as defined by various contracts and agreements. GEH, however, retains responsibility for the quality of the design and analysis performed for the ESBWR by organizations other than GEH. Throughout the design process, lines of communication have been established between GEH and its contractors. Design information is generated using common formats, electronic tools and software as reviewed and approved by the NRC, when appropriate. Documentation of the work is retained by GEH and, as appropriate, has been reviewed, audited, or inspected by the NRC throughout the review process. The GEH quality programs implemented throughout the design certification application development and review are identified in Chapter 17 of this document, including oversight of contractors. Several of the major contractors providing input to the ESBWR DCD are described below.

Shimizu Corporation

Shimizu Corporation is a leading architectural, engineering and general contracting firm, offering an integrated, comprehensive planning, design and build solutions for a broad range of construction and engineering projects worldwide. It has annual sales of approximately US $14 billion and has been widely recognized as one of the top five contractors in Japan and among the top 20 in the world.

Empresarios Agrupados (EA)

Established in 1971 and a leader in its field in Spain, EA is an architect-engineering organization of international standing and diversified activity in the following areas: energy, transport infrastructures, space, defense, and information technology.

BVZ (Black & Veatch Zachry)

Black & Veatch Corporation is a leading global engineering, construction and consulting company specializing in infrastructure development in the fields of energy, water and information. Black & Veatch serves its clients with conceptual and preliminary engineering services, engineering design, procurement, construction, financial management, asset management, information technology, environmental and management consulting services. Zachry Construction Corporation (ZCC) provides a wide array of services including construction, project development, construction management and industrial maintenance to both domestic and international customers. Zachry constructs and maintains power plants, steel mills, pulp and paper mills, chemical plants and refineries as well as dams, reservoirs, airfields, runways, highways and bridges, wastewater treatment plants and commercial construction.

URS

URS Corporation is a leading provider of engineering, construction and technical services for public agencies and private sector companies around the world. The Company offers a full range of program management; planning, design and engineering; systems engineering and technical assistance; construction and construction management; operations and maintenance; and decommissioning and closure services for power, infrastructure, industrial and commercial, and federal projects and programs.

ANATECH

ANATECH provides consulting services in the areas of Structural Analysis and Design, Bridge Engineering, Nuclear Fuel Technology, Finite Element Analysis and Simulations, Material Modeling, and Applied Science. The Company also develops, maintains, and distributes software related to structural analysis, bridge engineering, and nuclear fuel performance.

EXCEL Services Corporation

EXCEL Services Corporation was founded in 1985 to provide specialized professional services to nuclear utilities in the areas of licensing and regulatory support and Technical Specifications. Since its founding, EXCEL has become recognized as the premier supplier of licensing, regulatory compliance, and Technical Specification services, and has extensive experience in successful negotiations regarding licensing and Technical Specification issues. From a small, focused, specialty consulting organization, EXCEL has evolved into a broad organization with the ability to supply the right professionals for any task requiring the best in technical support or engineering expertise and thus EXCEL has become the premier licensing support company in the U.S. market.

WorleyParsons

WorleyParsons Limited is a large Australian provider of professional services to international customers of energy, resource, and complex process industries.

Panlyon

Panlyon Technologies has performed engineering services in conjunction with nuclear, PRA, mechanical, structural, electrical, I&C and licensing disciplines. The implementation of these services required successful interaction with a broad range of plant personnel, Arcitect/Engineers, Vendors, Suppliers, and the Nuclear Regulatory Commission. It has also provided numerous training programs to reactor operators, Shift Technical Advisors and engineering support personnel, with its core capabilities and experience working with personnel at all organizational levels allowing it to successfully handle a wide range of projects.

Equipos Nucleares SA (ENSA)

ENSA was founded in 1973 to satisfy the demands of the Spanish nuclear civil program pertaining to the manufacturing of large nuclear components. The Services Division was created in 1980 and since then has been working at nuclear plants on tasks like fuel handling, maintenance, decontamination, and decommissioning. ENSA has designed and manufactured casks (storage and transport) and racks for fuel handling. ENSA has supplied components for nuclear plants in compliance with international standards and the most strict quality requirements.

Adecco

The Adecco Group is a leading provider of human resource solutions. With over 28,000 employees and 5,500 offices, in more than 60 countries and territories around the world, Adecco Group offers a wide variety of services, connecting more than 500,000 colleagues with over 100,000 clients every day.

Granite Services International, Inc.

Granite Services International, Inc. is a global leader in variable workforce solutions. Specifically developed and structured to provide outsourcing solutions for industries requiring experienced technical, professional and industrial candidates, Granite maintains a global network of 60,000 resources available for short and long-term assignments.

Table 1.4-1

Commercial Nuclear Reactors Completed and Under Construction By GE/GEH

Station	Utility Name (at time of plant order)	Original Rated MWe	Year of Order	Year of Low Power License
Dresden 1	Commonwealth Edison	207	1955	1959
Humboldt Bay	Pacific Gas & Electric	70	1958	1962
KAHL	Germany	15	1958	1961
Garigliano	Italy	150	1959	1964
Big Rock Point	Consumers Power	72	1959	1963
JPDR	Japan	11	1960	1963
KRB	Germany	237	1962	1967
Tarapur 1	India	190	1962	1967
Tarapur 2	India	190	1962	1969
Dodewaard	GKN	52	1963	1968
Oyster Creek	GPU	640	1963	1969
Nine Mile Point 1	Niagara Mohawk	610	1963	1969
Dresden 2	Commonwealth Edison	794	1965	1969
Pilgrim	Boston Edison	670	1965	1972
Millstone 1	Northeast Utilities	652	1965	1970
Tsuruga 1	Japan Atomic Power Co.	340	1965	1970
Santa Maria de Garoña	Nuclenor	440	1965	1971
Fukushima 1	Tokyo Electric Power Co.	439	1966	1971
KKM (Mühleberg)	BKW	306	1966	1972

Table 1.4-1

Commercial Nuclear Reactors Completed and Under Construction By GE/GEH

Station	Utility Name (at time of plant order)	Original Rated MWe	Year of Order	Year of Low Power License
Dresden 3	Commonwealth Edison	794	1966	1971
Monticello	Northern States Power	548	1966	1970
Quad Cities 1	Commonwealth Edison	789	1966	1972
Browns Ferry 1	TVA	1067	1966	1973
Browns Ferry 2	TVA	1067	1966	1974
Quads Cities 2	Commonwealth Edison	789	1966	1972
Vermont Yankee	Vermont Yankee	515	1966	1972
Peach Bottom 2	Philadelphia Electric Co.	1065	1966	1973
Peach Bottom 3	Philadelphia Electric Co.	1065	1966	1974
FitzPatrick	PASNY	821	1968	1974
Shoreham	LILCO	820	1967	1984
Cooper	Nebraska Public Power District	778	1967	1974
Browns Ferry 3	TVA	1067	1967	1977
Limerick 1	Philadelphia Electric Co.	1100	1967	1984
Limerick 2	Philadelphia Electric Co.	1100	1967	1988
Hatch 1	Georgia Power Corp.	786	1967	1974
Fukushima 2	Tokyo Electric Power Co.	762	1967	1975
Brunswick 1	Carolina P&L	821	1968	1977
Brunswick 2	Carolina P&L	821	1968	1974

Table 1.4-1

Commercial Nuclear Reactors Completed and Under Construction By GE/GEH

Station	Utility Name (at time of plant order)	Original Rated MWe	Year of Order	Year of Low Power License
Duane Arnold	Iowa Electric	545	1968	1974
Fermi 2	Detroit Edison	1093	1968	1987
Hope Creek 1	PSE&G	1067	1969	1984
Chinshan 1	Taiwan Power Co.	610	1969	1978
Caorso	ENEL	822	1969	1977
Hatch 2	Georgia Power	786	1970	1978
LaSalle 1	Commonwealth Edison	1078	1970	1982
LaSalle 2	Commonwealth Edison	1078	1970	1983
Susquehanna 1	Pennsylvania P&L	1050	1967	1982
Susquehanna 2	Pennsylvania P&L	1050	1968	1984
Chinshan 2	Taiwan Power Co.	610	1970	1979
Hanford 2 (now Columbia Station)	WPPSS	1100	1971	1983
Nine Mile Point 2	Niagara Mohawk	1100	1971	1987
Grand Gulf 1	SERI	1250	1971	1982
Fukushima 6	Tokyo Electric Power Co.	1135	1971	1979
Tokai 2	Japan Atomic Power Co.	1135	1971	1977
River Bend 1	Gulf States Utilites	940	1972	1985
Perry	Cleveland Electric	1205	1972	1981
Laguna Verde 1	CFE	660	1972	1988

Table 1.4-1

Commercial Nuclear Reactors Completed and Under Construction By GE/GEH

Station	Utility Name (at time of plant order)	Original Rated MWe	Year of Order	Year of Low Power License
Leibstadt	Kernkraftwerk Leibstadt AG	940	1972	1984
Kuosheng 1	Taiwan Power Co.	992	1972	1981
Kuosheng 2	Taiwan Power Co.	992	1972	1982
Clinton	Illinois Power	950	1973	1986
Cofrentes	Hidroelectrica Española	975	1973	1985
Laguna Verde 2	CFE	660	1973	1994
Kashiwazaki 6	Tokyo Electric Power Co.	1300	1987	1996
Kashiwazaki 7	Tokyo Electric Power Co.	1300	1987	1997
Lungmen 1	Taiwan Power Co.	1300	1996	
Lungmen 2	Taiwan Power Co.	1300	1996	

1.5 REQUIREMENTS FOR FURTHER TECHNICAL INFORMATION

This section presents the background for the evolution of the ESBWR design, the methodology used to assess the need for further technical information, the computer code used for analysis and design, and the major Simplified Boiling Water Reactor (SBWR) and ESBWR Test Programs.

1.5.1 Evolutionary Design

The ESBWR design is an evolutionary step in boiling water reactor (BWR) design, which traces its commercial demonstration and operating plant history back before 1960 and represents hundreds of reactor years of successful licensed plant operation. Table 1.5-1 and Figure 1.5-1 summarize the evolution of the BWR design. Since its inception, the BWR has had plant simplification as a goal for each product improvement, as illustrated in Figure 1.5-2. The ESBWR, as described in this Design Control Document (DCD), has major simplifying improvements drawn from predecessor designs, such as pressure-suppression containment, natural circulation, isolation condenser handling of waste heat, and gravity-driven makeup water systems. Key design features of predecessor designs are listed in Table 1.5-1. The incorporation of these features from predecessor designs has been accomplished with safety in mind and has emphasized employment of passive means of dealing with operational transients and hypothetical loss-of-coolant accidents (LOCAs). The result of this particular design assemblage of previously licensed plant features is a simplified operator response to these events. Most plant upset conditions are dealt with in essentially the same manner that is typical for the hypothetical steamline break. In addition, operator response times for all hypothetical events have been relaxed from minutes for previously licensed reactors to days for the ESBWR. Most features of the ESBWR have been taken directly from licensed commercial BWRs and reviewed and redesigned, as appropriate, for the ESBWR. (See Table 1.5-2.) The ESBWR draws together the best of previously licensed plant features to continue the simplification process. As an example, the evolution of the containment is shown in Figure 1.5-3.

1.5.2 Analysis and Design Tools

As implied in Subsection 1.5.1, there is now an immense amount of data available from operating plants and from the testing and licensing efforts done to license the predecessor designs and individual plants. The vast database of feature performance in licensed reactors, combined with the recent thorough licensing review of the ABWR, provides an extremely well-qualified foundation from which to make the modest extrapolations to the ESBWR. To make that extrapolation, GEH has developed one computer code (TRACG) to use for design and for three out of the four most limiting licensing analyses. GEH has chosen to develop the TRACG code, validated by the operating plant experience and appropriate testing, in order to analyze the challenges to the fuel (10 CFR 50.46 and Appendix K, Section 6.3), the challenges to the containment (Section 6.2), and many of the anticipated operational occurrences (AOOs) (Minimum Critical Power Ratio [MCPR], Chapter 15). The radiological responses to hypothetical accidents (LOCAs) are presented also in Chapter 15, but do not use TRACG for analysis. Thus, TRACG draws from the very large database of licensed BWRs, which includes all features of the ESBWR (albeit in various configurations) and appropriate testing, and allows direct application to ESBWR design and analysis (Table 1.5-2).

1.5.2.1 TRACG

The TRACG Code and its application to the ESBWR are documented in a series of GE Nuclear Energy Topical Reports, References 1.5-1 through 1.5-5, 1.5-15, and 1.5-16.

TRACG is a GEH proprietary version of the Transient Reactor Analysis Code (TRAC). It is a best-estimate code for analysis of BWR transients ranging from simple operational transients to design basis LOCAs, stability, and anticipated transients without scram (ATWS).

Background

TRAC was originally developed for pressurized water reactor (PWR) analysis by Los Alamos National Laboratory, the first PWR version of TRAC being TRAC-P1A. The development of a BWR version of TRAC started in 1979 in a close collaboration between GE and Idaho National Engineering Laboratory. The objective of this cooperation was the development of a version of TRAC capable of simulating BWR LOCAs. The main tasks consisted of improving the basic models in TRAC for BWR applications and developing models for the specific BWR components. This work culminated in the mid-eighties with the development of TRACB04 at GE and TRAC-BD1/MOD1 at Idaho National Engineering Laboratory, which were the first major versions of TRAC having BWR LOCA capability. Due to the joint development effort, these versions were very similar, having virtually identical basic and component models. The GE contributions were jointly funded by GE, the Nuclear Regulatory Commission (NRC) and Electric Power Research Institute (EPRI) under the REFILL/REFLOOD and FIST programs.

The development of the BWR version has continued at GE/GEH since 1985. The objective of this development was to upgrade the capabilities of the code to include transient, stability and ATWS applications. During this phase, major developments included the implementation of a core kinetics model and addition of an implicit integration scheme into TRAC. The containment models were upgraded for simplified boiling water reactor (SBWR) applications, and the simulation of the BWR fuel bundle was also improved. TRACG was the end result of this development.

Scope and Capabilities

TRACG is based on a multi-dimensional two-fluid model for the reactor thermal hydraulics and a three-dimensional neutron kinetics model.

The two-fluid model used for the thermal hydraulics solves the conservation equations for mass, momentum and energy for the gas and liquid phases. TRACG does not include any assumptions of thermal or mechanical equilibrium between phases. The gas phase may consist of a mixture of steam and a noncondensable gas, and the liquid phase may contain dissolved boron. The thermal-hydraulic model is a multi-dimensional formulation for the vessel component and a one-dimensional formulation for all other components.

The conservation equations for mass, momentum and energy are closed through an extensive set of basic models consisting of constitutive correlations for shear and heat transfer at the gas/liquid interface as well as at the wall. The constitutive correlations are flow regime dependent and are determined based on a single flow regime map, which is used consistently throughout the code.

In addition to the basic thermal-hydraulic models, TRACG contains a set of component models for BWR components, such as channels, steam separators, and can simulate BWR steam dryers

as part of its vessel model. TRACG also contains a control system model capable of simulating the major BWR control systems such as those for pressure and water level.

The neutron kinetics model is consistent with the GEH BWR core simulator PANACEA. It solves a modified one-group diffusion model with six delayed neutron precursor groups. Feedback is provided from the thermal-hydraulic model to the kinetics model for moderator density, fuel temperature, boron concentration and control rod position.

The TRACG structure is based on a modular approach. The TRACG thermal-hydraulic model contains a set of basic components, such as pipe, valve, tee, channel, steam separator, heat exchanger and vessel. System simulations are constructed using these components as building blocks. Any number of these components may be combined. The number of components, their interaction, and the detail in each component are specified through code input. Consequently, TRACG has the capability to simulate a wide range of facilities, ranging from simple separate effects tests to complete BWR plants.

TRACG has been extensively qualified against separate effects tests, component performance data, integral system effects tests and full-scale BWR plant data. A detailed documentation of the qualification is contained in the TRACG qualification report, Reference 1.5-2.

1.5.2.2 Scope of Application of TRACG to ESBWR

The total effort and extent of qualification performed on TRACG, since its inception in 1979, now exceeds, both in extent and breadth, that of any other engineering computer program GE/GEH has submitted to the NRC for design application approval. The application of TRACG for ESBWR LOCA analysis of ECCS and containment performance has been approved by the NRC [Reference 1.5-3]. For Anticipated Operational Occurrences (AOOs), the TRACG methodology approved for operating BWRs is employed [Reference 1.5-4]. TRACG application for ESBWR stability analysis is contained in Reference 1.5-5. TRACG application for ESBWR anticipated transient without scram analysis is contained in Reference 1.5-15.

Anticipated Operational Occurrences Analysis

TRACG is used to perform safety analyses of the AOOs described in Chapter 15 and the ASME reactor vessel overpressure protection event as described in Section 5.2 and Subsection 15.5.1.

The analysis determines the most limiting event for the AOOs in terms of Critical Power Ratio (CPR) and establishes Operating Limit Minimum CPR (OLMCPR). The OLMCPR includes the statistical CPR adder, which accounts for uncertainty in calculated results arising from uncertainties associated with the TRACG model, initial conditions, and input parameters, as well as uncertainties associated with the critical power correlation. Sensitivity analysis of important parameters affecting the transient results is performed using TRACG. Concepts derived from the Code Scaling, Applicability, and Uncertainty (CSAU) methodology [References 1.5-6, 1.5-7] are utilized for quantifying the uncertainty in calculated results.

The analysis also determines the most limiting overpressure protection events in terms of peak vessel pressure. The results are used to demonstrate adequate pressure margin to the reactor vessel design limit with the ESBWR design safety relief valve capacity. The overpressure protection analysis is performed based on conservative initial conditions and input values.

ATWS Analysis

TRACG is used for evaluation of the ATWS events in Chapter 15. The analysis determines the most limiting ATWS events in terms of reactor vessel pressure, heat flux, neutron flux, peak cladding temperature, suppression pool temperature, and containment pressure. The results are used to demonstrate the capability of the ESBWR mitigation design features to comply with the ATWS licensing criteria.

ECCS-LOCA Analysis

TRACG is used for evaluation of the complete spectrum of postulated break sizes and locations, together with possible single active failures, in Section 6.3. This evaluation determines the worst-case break and single failure combinations. The results are used to demonstrate the ESBWR Emergency Core Cooling System (ECCS) capability to comply with the licensing acceptance criteria.

Sensitivity analyses of important parameters affecting LOCA results are performed using TRACG. For the ESBWR, the LOCA analysis results show no core uncovery for any LOCA. Based on the sensitivity studies, a bounding calculation is performed for the minimum water level inside the shroud for use as the licensing basis. The ESBWR LOCA results have large margin with respect to the licensing acceptance criteria.

Containment Analysis

TRACG is also used for evaluation of containment response during a LOCA. The analysis determines the most limiting LOCA for containment (or Design Basis Accident, DBA) in terms of containment pressure and temperature responses. The DBA is determined from consideration of a full spectrum of postulated LOCAs. The results are used to demonstrate compliance with the ESBWR containment design limits as defined in Table 6.2-1. Sensitivity of the containment response to parameters identified as important is evaluated using TRACG to assess the effect of uncertainties of these parameters on the containment responses. Based on the sensitivity studies, a bounding calculation is performed for the containment pressure and temperature response for use as the licensing basis.

1.5.3 Testing

The ESBWR Test and Analysis Program Description is provided in Reference 1.5-8, which provides detailed justification for the adequacy of the test database for application to safety analysis.

The Phenomena Identification and Ranking Table (PIRT) discussed in Section 2 of Reference 1.5-8 identifies specific governing phenomena, of which a significant fraction were concluded to be "important" in prediction of ESBWR transient and LOCA performance. Most of these phenomena are common to those for operating BWRs. TRACG has been extensively qualified against separate effects tests, component performance tests, integral systems tests and plant operating data listed in Reference 1.5-8. This ‘base’ qualification is documented in the TRACG Qualification Report [Reference 1.5-2]. This section examines specific SBWR/ESBWR-related tests and test facilities beyond the previous qualification database.

Early in the SBWR program, the need for one piece of information for which there was no information in the data base was identified, i.e., a heat transfer correlation for steam

condensation in tubes in the presence of noncondensable gases. A test program was conducted to secure this information, reported to the NRC in Reference 1.5-9.

The Single Tube Condensation Test Program was conducted to investigate steam condensation inside tubes in the presence of noncondensable gases. The work was independently conducted at the University of California at Berkeley and at the Massachusetts Institute of Technology (MIT). The work was initiated in order to obtain a data base and a correlation for heat transfer in similar conditions as would occur in the SBWR/ESBWR PCCS tubes during a DBA LOCA. Three researchers utilized three separate experimental configurations at the University of California at Berkeley, while two researchers utilized one configuration at MIT. The researchers ran tests with pure steam, steam/air, and steam/helium mixtures with representative and bounding flow rates and noncondensable mass fractions. The experimenters found the system to be well behaved for all tests, with either of the noncondensable gases, for forced flow conditions similar to the ESBWR design. The results of the tests at the University of California at Berkeley have become the basis for the condensation heat transfer correlation used in the TRACG computer code.

While all SBWR/ESBWR features are extrapolations from current and previous designs, two features (specifically, the Passive Containment Cooling System and the Gravity-Driven Cooling System) represent the two most challenging extrapolations. Therefore, it was decided, for these two cases, to obtain additional test data, which could be used to demonstrate the capabilities of TRACG to successfully predict SBWR/ESBWR performance over a range of conditions and scales. Blind (in some cases double blind) predictions of test facility response use only the internal correlations of TRACG. No "tuning" of the TRACG inputs was performed, and no modifications to the coding were anticipated as a result of these tests.

For the case of the PCCS, the steady state heat exchanger performance was predicted in full-vertical-scale 3-tube (GIRAFFE), 20-tube (PANDA), and prototypical 496-tube (PANTHERS) configurations, over the range of steam and noncondensable conditions expected for the SBWR. This process addresses scale and geometry differences between the basic phenomena tests performed in single tubes, and larger scales including prototype conditions. Transient performance was similarly investigated at two different scales in both GIRAFFE and PANDA.

TRACG GDCS performance predictions were performed against the GIST and GIRAFFE/SIT test series. Pre-test predictions have also been performed for the PANTHERS and PANDA steady state tests.

Additional Design Requirements

- The performance of each safety feature of the design has been demonstrated through analysis, appropriate test programs, experience, or a combination thereof.
- Interdependent effects among the safety features of the design have been found acceptable through analysis, appropriate test programs, experience, or a combination thereof.
- Sufficient data exist on the safety features of the design to assess the analytical tools used for safety analysis over a sufficient range of operating conditions, transient conditions, and specified accident sequences, including equilibrium core conditions.

The ESBWR meets the above design requirements, as discussed below:

- ESBWR plant features have been used in earlier BWR designs and most continue in operation today after many years and over a very large number of combined plant operating years of service. While the details of the particular plant feature design for the ESBWR may differ somewhat from those in current plants, the function of each feature is substantially the same.
- In those scenarios in which ESBWR safety features come into operation, either no additional systems are required, and therefore, system interactions are not an issue, or the system designs are similar between the ESBWR and the operating plants having the feature. The operating plant feature(s) perform under the same general conditions and for the same scenarios as are anticipated to occur in the ESBWR.
- Feature performance has been predicted with the TRACG computer program. TRACG has been qualified by comparison to data from experiments and operating BWRs over a wide range of reactor conditions, including temperatures and pressures during which the features are expected to operate. The TRACG analyses add to the confidence that the features would perform as expected. The NRC safety evaluation report for Reference 1.5-3 concludes that no further testing in support of the thermal hydraulic behavior of the design is necessary.

The detailed design of specific ESBWR plant equipment is, in some cases, not specified in the ESBWR DCD; in some instances, only the design requirements of the equipment are given. When this is the case, a requirement for hardware testing is not appropriate under the certification program. However, because the ESBWR-specific hardware design differs from that currently in use, GEH believes that testing before application of a specific equipment design in a plant should be planned. Therefore, testing of plant hardware is done prior to or during startup testing of the plant.

For any ESBWR constructed, equipment performance will be demonstrated. For example, overall testing of the heat rejection capability of the isolation condensers is to be included as part of the plant startup test program. No ESBWR plant will operate until plant-specific tests confirm that each isolation condenser meets the performance requirements. Full-scale tests of an isolation condenser module in the PANTHERS test facility, as well as experience with condensing heat exchangers in many industries give high confidence that the requirements will be met.

1.5.3.1 Major ESBWR Unique Test Programs

As noted previously, the vast majority of data supporting the ESBWR design were generated using the design of the previous BWR product lines. ESBWR-unique certification and confirmatory tests applicable to its design are listed below.

GIST (Confirmatory)

GIST is an experimental program conducted by GE to demonstrate the Gravity-Driven Cooling System (GDCS) concept and to collect data to qualify the TRACG computer code for ESBWR applications. Simulations were conducted of Design Basis Accident LOCAs representing main steamline break, bottom drain line break, GDCS line break, and a non-LOCA loss of inventory. Test data have been used in the qualification of TRACG for ESBWR applications, and

documented in Reference 1.5-10. Tests were completed in 1988 and documented by GE in 1989. GIST data have been used for validation of certain features of TRACG.

GIRAFFE (Certification)

GIRAFFE [Reference 1.5-11] is an experimental program conducted by the Toshiba Corporation to investigate thermal-hydraulic aspects of the Passive Containment Cooling System (PCCS). Fundamental steady state tests on condensation phenomena in the PCCS tubes were conducted. Simulations were run of DBA LOCAs; specifically, the main steamline break. GIRAFFE data have been used to substantiate PANDA and PANTHERS data at a different scale and to support validation of certain features of TRACG. Also, two additional series of tests have been conducted in the GIRAFFE facility: The first (GIRAFFE/Helium) demonstrates the operation of the PCCS in the presence of lighter-than-steam noncondensable gas; and the second (GIRAFFE/SIT) provides additional information regarding potential system interaction effects in the late blowdown/early GDCS period.

PANDA (Certification)

PANDA [Reference 1.5-11] is an experimental program run by the Paul Scherrer Institut in Switzerland. PANDA is a full-vertical-scale, 1/25 volume, scale model of the SBWR system designed to model the thermal-hydraulic performance and post-LOCA decay heat removal of the PCCS. Both steady state and transient performance simulations have been conducted. Testing at the same thermal-hydraulic conditions as previously tested in GIRAFFE and PANTHERS allows scale-specific effects to be quantified. Blind pre-test analyses using TRACG were submitted to the NRC prior to start of the testing. PANDA data have been used directly for validation of certain features of TRACG.

PANTHERS (Certification)

PANTHERS [Reference 1.5-11] is an experimental program performed by SIET in Italy, with the dual purpose of providing data for TRACG qualification and demonstration testing of the prototype PCCS and isolation condenser heat exchangers. Steam and noncondensable gases were supplied to prototype heat exchangers over the complete range of SBWR conditions to demonstrate the capability of the equipment to handle post-LOCA heat removal. Testing was performed at the same thermal-hydraulic conditions as in GIRAFFE and PANDA. Blind pre-test analyses of selected test conditions using TRACG were submitted to the NRC prior to the start of testing. PANTHERS data are used directly for validation of certain features of TRACG.

In addition to thermohydraulic testing, an objective of PANTHERS was to demonstrate the structural adequacy of the heat exchangers to exceed the SBWR/ESBWR expected lifetime requirement. This was accomplished by pre- and post-test nondestructive examination, following cycling of the equipment in excess of requirements.

Additional PANDA Tests (Confirmatory)

A supplementary program known as TEPSS [Reference 1.5-12] has also been performed in the PANDA test facility to test an earlier ESBWR configuration with the GDCS pool connected to the wetwell gas space rather than the drywell. These tests confirm the expected increased margin to the containment design pressure for this ESBWR configuration. This series of tests also included injection of Helium, providing data on PCCS performance with light noncondensable gases at an additional scale.

Scaling of Tests

A discussion of scaling of the major SBWR and ESBWR tests is contained in References 1.5-13 and 1.5-14. These reports contain a complete discussion of the features and behavior of the SBWR and ESBWR during challenging events. The analysis includes the general (Top-Down approach) scaling considerations, the scaling of specific (Bottom-Up approach) phenomena, and the scaling approach for the specific tests discussed above. The scaling analysis shows that the SBWR and ESBWR tests represent the ESBWR response without significant distortions, and can be used for qualification of the TRACG code for ESBWR applications.

1.5.4 References

1.5-1 GE Hitachi Nuclear Energy, "TRACG Model Description," NEDE-32176P, Class III (GE proprietary), Revision 4, January 2008, and NEDO-32176, Class I (Non-proprietary), Revision 4, January 2008.

1.5-2 GE Nuclear Energy, "TRACG Qualification," NEDE-32177P, Class III (GEH proprietary), Revision 3, August 2007, and NEDO-32177, Class I (Non-proprietary), Revision 3, August 2007.

1.5-3 GE Nuclear Energy, "TRACG Application for ESBWR," NEDC-33083P-A, Class III (GE proprietary), March 2005, and NEDO-33083-A, Class I (Non-proprietary), October 2005.

1.5-4 GE Nuclear Energy, "TRACG Application for Anticipated Operational Occurrences (AOO) Transient Analyses," NEDE-32906P-A, Class III (GE proprietary), Revision 3, September 2006, and NEDO-32906-A, Class I (Non-proprietary), Revision 3, September 2006.

1.5-5 GE Hitachi Nuclear Energy, "TRACG Application for ESBWR Stability Analysis," NEDE-33083P-A, Class III (GEH proprietary), Supplement 1, Revision 1, January 2008, and NEDO-33083-A, Class I (Non-proprietary), Supplement 1, Revision 1, January 2008.

1.5-6 USNRC, "Quantifying Reactor Safety Margins," NUREG/CR-5249, EGG-2552.

1.5-7 B. E. Boyack, et al, "Quantifying Reactor Safety Margins," Nuclear Engineering and Design (Parts 1-4), 119 (1990), Elsevier Science Publishers B. V. (North Holland).

1.5-8 GE Nuclear Energy, "ESBWR Test and Analysis Program Description," NEDC-33079P, Class III (GE proprietary), Revision 1, March 2005, and NEDO-33079, Class I (Non-proprietary), Revision 1, November 2005.

1.5-9 GE Nuclear Energy, MIT and UCB Separate Effects Tests for PCCS Tube Geometry, "Single Tube Condensation Test Program," NEDC-32301, Class II, March 1994.

1.5-10 GE Nuclear Energy, "Simplified Boiling Water Reactor (SBWR) Program – Gravity-Driven Cooling System Integration Systems Test – Final Report," GEFR-00850, Class II, October 1989.

1.5-11 GE Nuclear Energy, "SBWR Testing Summary Report," NEDC-32606P, Class III (GE proprietary), August 2002.

1.5-12 GE Nuclear Energy, "ESBWR Test Report," NEDC-33081P, Class III (GE proprietary), Revision 1, May 2005, and NEDO-33081, Class I (Non-proprietary), Revision 1, December 2005.

1.5-13 GE Nuclear Energy, "Scaling of the SBWR Related Tests," NEDC-32288P, Class III (GE proprietary), Revision 1, October 1995, and NEDO-32288, Class I (Non-proprietary), Revision 0, December 1995.

1.5-14 GE Nuclear Energy, "ESBWR Scaling Report," NEDC-33082P, Class III (GE proprietary), Revision 2, April 2008, and NEDO-33082, Class I (Non-proprietary), Revision 2, April 2008.

1.5-15 GE Hitachi Nuclear Energy, "TRACG Application for ESBWR Anticipated Transient Without Scram Analyses," NEDE-33083P, Class III (GEH proprietary), Supplement 2, Revision 2, September 2009, and NEDO-33083, Class I (Non-proprietary), Supplement 2, Revision 2, September 2009.

1.5-16 GE-Hitachi Nuclear Energy, "TRACG Application for ESBWR Transient Analysis," NEDE-33083P Supplement 3, Class III (GEH proprietary), Revision 1, September 2009, NEDO-33083 Supplement 3, Class I (Non-proprietary), Revision 1, September 2009.

Table 1.5-1

Evolution of the GE/GEH BWR

Product Line Number	Year of Introduction	Characteristic Plants/Features
BWR/1	1955	Dresden 1, Big Rock Point, Humboldt Bay, KRB, Dodewaard • Natural circulation (Humboldt Bay, Dodewaard only) • First internal steam separation • Isolation condenser • Pressure Suppression Containment
BWR/2	1963	Oyster Creek • Large direct cycle
BWR/3/4	1965/1966	Dresden 2/Browns Ferry • First jet pump application • Improved ECCS: spray and flood • Reactor core isolation cooling system
BWR/5	1969	La Salle, NMP-2 • Improved ECCS systems • Valve recirculation flow control
BWR/6	1972	Grand Gulf, Perry, Clinton • Improved jet pumps and steam separators • Reduced fuel duty: 44 kW/m (13.4 kW/ft) • Improved ECCS performance • Gravity Containment Flooder • (option) Solid-state nuclear system protection system (Clinton only) • (option) Compact control room
ABWR	1996	• Fine Motion Control Rod Drives • Internal Recirculation Pumps
SBWR / ESBWR		Gravity Flooder, Isolation Condenser, Passive Containment Cooling, Natural Circulation

Table 1.5-2

ESBWR Features and Related Experience

ESBWR Feature	Plants	Testing
Isolation Condenser	Dodewaard, Dresden 1,2,3, Big Rock Pt., Tarapur 1,2, Nine Mile Pt 1, Oyster Creek, Millstone 1, Tsuruga, Santa Maria de Garoña, Fukushima 1	Operating Plants
Natural Circulation	Dodewaard Humboldt Bay	Operating Plants
Squib valves	BWR/1-6 and ABWR Standby Liquid Control Injection Valves	Operating Plants IEEE 323 Qualification Testing
Gravity Flooder	Perry, Clinton, Grand Gulf Upper Pool Dump System, Suppression Pool Flooder System	Operating Plants Preoperational Testing
Internal Steam Separators	BWR/1-6 and ABWR	Operating Plants
Chimney (Core to Steam Separators)	Dodewaard, Humboldt Bay	Operating Plants
FMCRDs	ABWR	ABWR Test/ Development Program (Demonstration at La Salle Plant)
Automatic Depressurization Valves (DPVs)	All BWRs	Operating Plants
Pressure Suppression	BWR/1-6 and ABWR	Mark I, Mark II, Mark III and ABWR Tests
Horizontal Vents	BWR/6 and ABWR, Perry, Grand Gulf, Clinton, River Bend, etc.	ABWR Testing

Table 1.5-2

ESBWR Features and Related Experience

ESBWR Feature	Plants	Testing
Quenchers	BWR/2–6 and ABWR	Operating Plants
PCCS (Dual Function Heat Exchangers)	Operating Plants with Residual Heat Removal Heat Exchanger Steam Condensing Mode	Operating Plants, PANDA, GIRAFFE, SIET
Digital/Solid State Control System	ABWR, Clinton, Operating Plant Upgrades	Operating Plants, Clinton

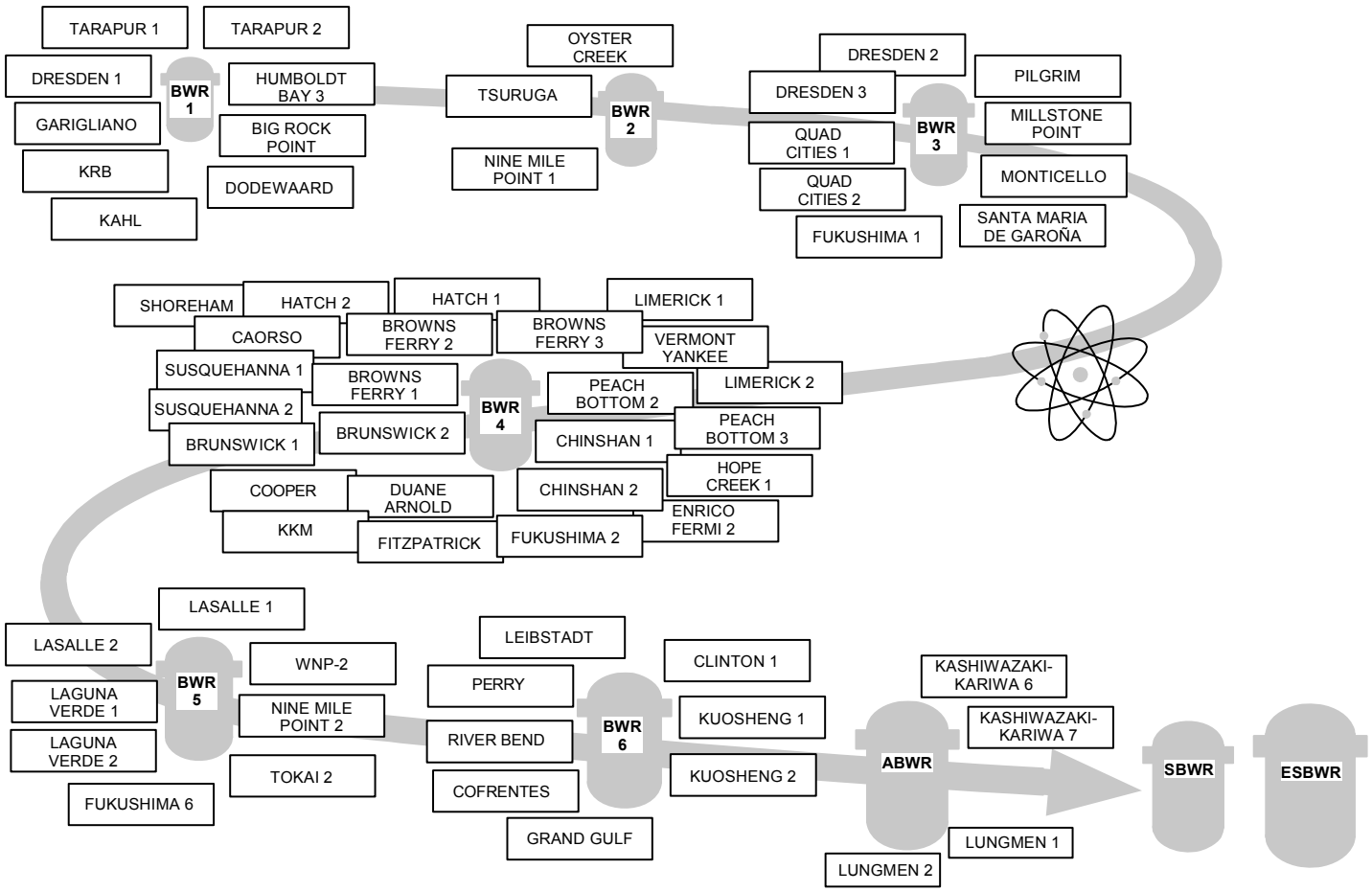

Figure 1.5-1. Evolution of the GE/GEH BWR

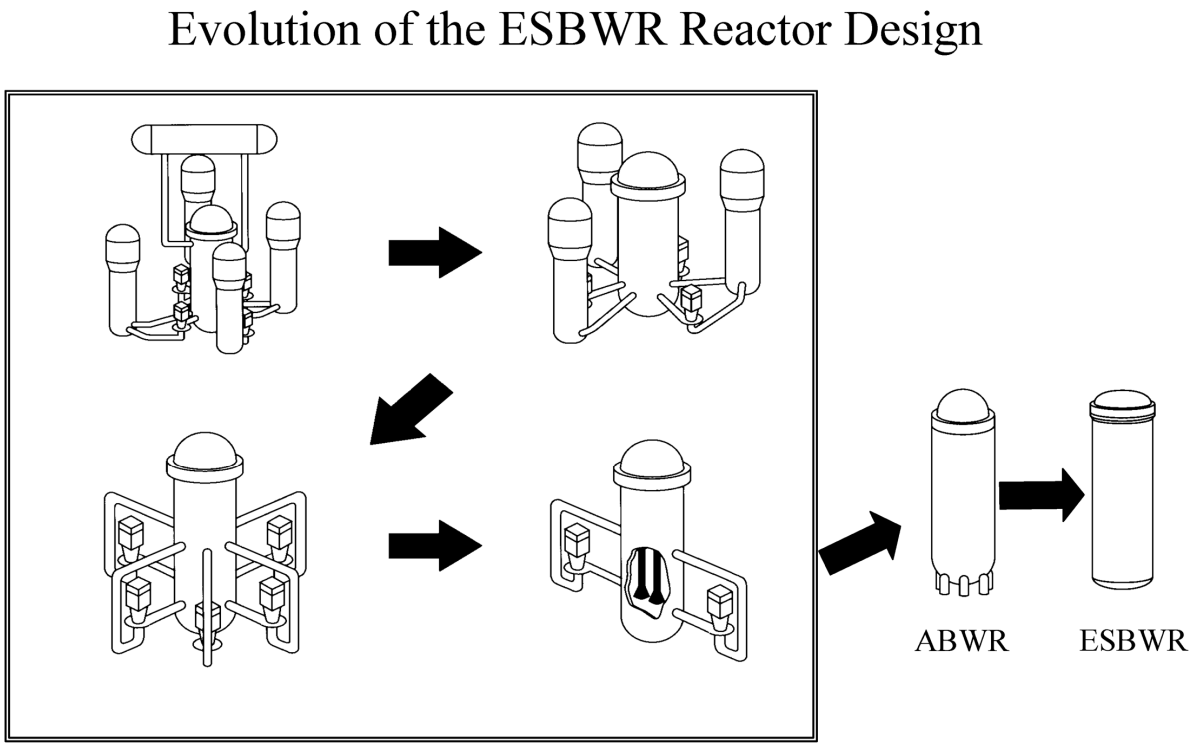

Figure 1.5-2. Evolution of the BWR Reactor Design

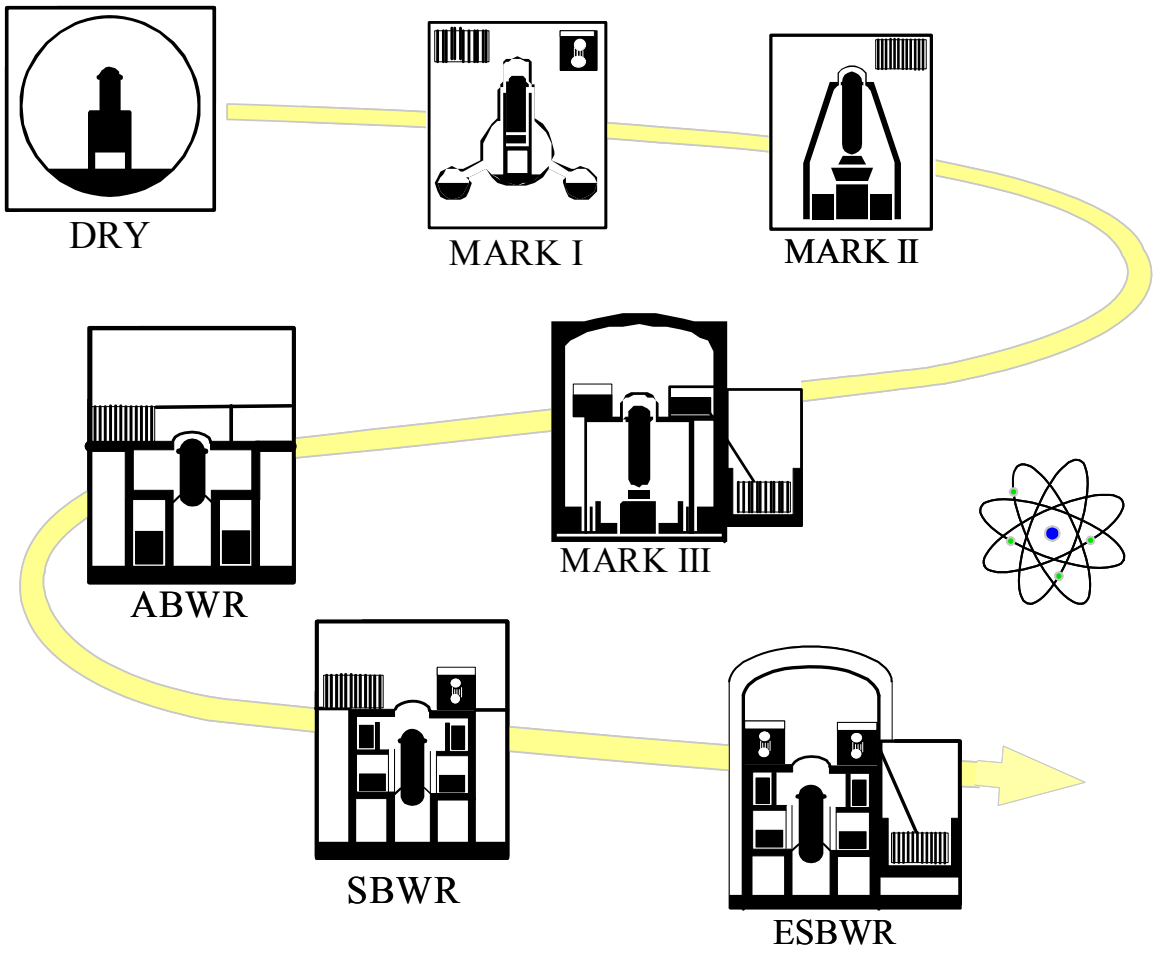

Figure 1.5-3. Comparison of BWR Containments

1.6 MATERIAL INCORPORATED BY REFERENCE

Table 1.6-1 lists all GE and GEH reports that are incorporated in whole or in part by reference in the ESBWR DCD Tier 2.

Table 1.6-2 lists all non-GE / GEH licensing topical reports that are incorporated in whole or in part by reference in the ESBWR DCD Tier 2.

Table 1.6-1
Referenced GE / GEH Reports

Report No.	Title	Section No.
23A6100	General Electric Company, "Advanced Boiling Water Reactor, Standard Safety Analysis Report," 23A6100, Class III (Proprietary) and Class I (Non-proprietary), Revision 8, May 13, 1996.	15A
APED–5640	General Electric Company, R. L. Crowther, "Xenon Considerations in Design of Large Boiling Water Reactors," APED–5640, June 1968.	4.3
APEX-510	General Electric Company, "Polynomial Approximation of Gamma Ray Buildup Factors for a Point Isotropic Source", APEX-510, November 1958.	12.3
GEFR-00850	GE Nuclear Energy, "Simplified Boiling Water Reactor (SBWR) Program – Gravity-Driven Cooling System Integration Systems Test – Final Report," GEFR-00850, Class II, October 1989.	1.5
GEFR-00879	GE Nuclear Energy, "Simplified Boiling Water Reactor (SBWR) Program – Depressurization Valve Development Test Program Final Report," GEFR-00879, October 1990.	5.4
GEZ-4982A	General Electric Large Steam Turbine Generator Quality Control Program, GEZ-4982A, Revision 1.2, February 7, 2006.	3.2
NEDO-10722A	General Electric Company, "Core Flow Distribution in a General Electric Boiling Water Reactor as Measured in Quad Cities Unit 1," NEDO-10722A, August 1976.	4.4
NEDO-10871	General Electric Company, "Technical Derivation of BWR 1971 Design Basis Radioactive Material Source Terms," NEDO-10871, March 1973.	11.1

Table 1.6-1

Referenced GE / GEH Reports

Report No.	Title	Section No.
NEDE-10958-PA NEDO-10958-A	General Electric Company, "General Electric Thermal Analysis Basis Data, Correlation and Design Application," NEDE-10958-PA, Class III (Proprietary), and "General Electric BWR Thermal Analysis Basis (GETAB): Data, Correlation and Design Application," NEDO-10958-A, Class I (Non-proprietary), January 1977.	4.4, Chapter 16 B2.1.1
NEDE-11146	General Electric Company, "Pressure Integrity Design Basis for New Off-Gas Systems," NEDE-11146, marked Class II (Employees Only) but now considered Class I (Non-proprietary), July 1971.	11.3
NEDO-11209-04A	GE Nuclear Energy, "GE Nuclear Energy Quality Assurance Program Description," Class I (Non-proprietary), NEDO-11209-04A, Revision 8, March 31, 1989.	1.9, 7.5, 17.0, 17.1
NEDO–20964-A	General Electric Company, R. C. Stirn, "Generation of Void and Doppler Reactivity Feedback for Application to BWR Design," NEDO–20964-A, Class I (Non-proprietary), December 1986.	4.3
NEDO-21052-A	General Electric Company, "Maximum Discharge Rate of Liquid-Vapor Mixtures from Vessels," NEDO-21052-A, Class I (Non-proprietary), May 1979.	6.2
NEDO-21159	General Electric Company, "Airborne Releases From BWRs for Environmental Impact Evaluations," NEDO-21159, March 1976.	11.1

Table 1.6-1

Referenced GE / GEH Reports

Report No.	Title	Section No.
NEDE-21175-3-P-A NEDO-21175-3-A	General Electric Company, "BWR Fuel Assembly Evaluation of Combined Safe Shutdown Earthquakes (SSE) and Loss-of-Coolant Accident (LOCA) Loadings (Amendment No. 3)," NEDE-21175-3-P-A (Proprietary) and NEDO-21175-3-A (Non-proprietary), October 1984.	3.9
NEDO-21215	General Electric Company, "Brunswick Steam Electric Plant Unit 1 Safety Analysis Report for Plant Modifications to Eliminate Significant In-Core Vibrations," NEDO-21215, April 1976.	4.4
NEDE-21354-P NEDO-21354	General Electric Company, "BWR Fuel Channel Mechanical Design and Deflection," NEDE-21354-P (Proprietary) and NEDO-21354 (Non-proprietary), September 1976.	3.9
NEDE-23785-1-PA NEDO-23785A	General Electric Company, "GESTR-LOCA – A Model for Prediction of Fuel Rod Thermal Performance", NEDE-23785-1-PA (Volume 1), Revision 1, Class III (Proprietary), October 1984 and NEDO-23785A (Volume 1), Class I (Non-proprietary), February 1985.	4.2
NEDE-23819	General Electric Company, "BWR/6 Drywell and Containment Maintenance and Testing Access Time Estimates," NEDE-23819, currently Class II (Employees Only), May 1978.	12.4
NEDE-23996-1	General Electric Company, "Maintenance Access Time Estimates – BWR/6 Auxiliary and Fuel Buildings," NEDE-23996-1, currently Class II (Employees Only), May 1979.	12.4

Table 1.6-1

Referenced GE / GEH Reports

Report No.	Title	Section No.
NEDE-23996-2	General Electric Company, "Maintenance Access Time Estimates – BWR/6 Radwaste Building," NEDE-23996-2, currently Class II (Employees Only), May 1979.	12.4
NEDE-23996-3	General Electric Company, "Work at Power Access Time Estimates – BWR/6 Containment, Auxiliary, Fuel, Radwaste and Turbine Buildings," NEDE-23996-3, currently Class II (Employees Only), May 1979.	12.4
NEDE-24011-P-A-16 NEDO-24011-A-16	Global Nuclear Fuel, "GESTAR II General Electric Standard Application for Reactor Fuel," NEDE-24011-P-A-16, Class III (Proprietary), and NEDO-24011-A-16, Class I (Non-proprietary), Revision 16, October 2007.	3.2
NEDE-24011-P-A-US-16 NEDO-24011-A-US-16	Global Nuclear Fuel, "GESTAR II General Electric Standard Application for Reactor Fuel, Supplement for United States," NEDE-24011-P-A-US-16, Class III (Proprietary), and NEDO-24011-A-US-16, Class I (Non-proprietary), Revision 16, October 2007.	15.3
(Deleted)		
NEDE-24222 NEDO-24222	General Electric Company, "Assessment of BWR Mitigation of ATWS, Volume II (NUREG 0460 Alternate No. 3)," NEDE-24222, Class III (Proprietary), December 1979, and NEDO-24222, Class I (Non-proprietary), February 1981.	15.0, 15.5
NEDE-24326-1-P	General Electric Company, "General Electric Environmental Qualification Program," NEDE-24326-1-P, Revision 1, Class III (Proprietary), January 1983.	3.9, 3.10, 3.11 Appendix 3I
NEDE-24679	General Electric Company, "Study of Advanced BWR Features, Plant Definition/Feasibility Results," Volume III, Appendix Part G, NEDE-24679, Class III (Proprietary), October 1979.	12.4

Table 1.6-1

Referenced GE / GEH Reports

Report No.	Title	Section No.
NEDO-25370	General Electric Company, "Anticipated Chemical Behavior of Iodine under LOCA Conditions," NEDO-25370, January 1981.	15.4
NEDE-30130-P-A NEDO-30130-A	General Electric Company, "Steady State Nuclear Methods," NEDE-30130-P-A, Class III (Proprietary), April 1985, and NEDO-30130-A, Class I (Non-proprietary), May 1985.	15.3
NEDE-31152P NEDO-31152	Global Nuclear Fuel, "Global Nuclear Fuels Fuel Bundle Designs," NEDE-31152P, Revision 9, Class III (Proprietary), May 2007, and NEDO-33152, Revision 9, Class I (Non-proprietary), May 2007.	4.2
(Deleted)		
NEDE-31758P-A	GE Nuclear Energy, "GE Marathon Control Rod Assembly," NEDE-31758P-A (Proprietary), October 1991.	4.2
NEDG-31831	GE Nuclear Energy, "SBWR Design and Certification Program Quality Assurance Plan," NEDG-31831, May 1990.	17.0
NEDC-31858P	GE Nuclear Energy, "BWROG Report for Increasing MSIV Leakage Rate Limits and Elimination of Leakage Control Systems," NEDC-31858P (Proprietary), Revision 2, September 1993.	15.4
NEDC-31959P	GE Nuclear Energy, "Fuel Rod Thermal-Mechanical Analysis Methodology (GSTRM)," NEDC-31959P (Proprietary), April 1991.	4.2
NEDO-31960-A	GE Nuclear Energy, "BWR Owners' Group Long-Term Stability Solutions Licensing Methodology," NEDO-31960-A, November 1995.	1.9, 4D
NEDO-31960-A Supplement 1	GE Nuclear Energy, "BWR Owners' Group Long-Term Stability Solutions Licensing Methodology," NEDO-31960-A, Supplement 1, Class I (Non-proprietary), November 1995.	4D

Table 1.6-1

Referenced GE / GEH Reports

Report No.	Title	Section No.
NEDC-32084P-A	GE Nuclear Energy, "TASC-03A, A Computer Program for Transient Analysis of a Single Channel," NEDC-32084P-A, Revision 2, Class III (Proprietary), July 2002.	4.4
NEDE-32176P NEDO-32176	GE Hitachi Nuclear Energy, J. G. M. Andersen, et al., "TRACG Model Description," NEDE-32176P, Revision 4, Class III (Proprietary), January 2008, and NEDO-32176, Revision 4, Class I (Non-proprietary), January 2008.	1.5, 4.4, 4D, 6B
NEDE-32177P NEDO-32177	GE Nuclear Energy, J. G. M. Andersen, et al., "TRACG Qualification," NEDE-32177P, Class III (Proprietary), Revision 3, August 2007, and NEDO-32177, Class I (Non-proprietary), Revision 3, August 2007.	1.5, 4.4, 4D
NEDC-32288P NEDO-32288	GE Nuclear Energy, "Scaling of the SBWR Related Tests," NEDC-32288P, Class III (Proprietary), Revision 1, October 1995, and NEDO-32288, Class I (Non-proprietary), Revision 0, December 1995.	1.5
NEDC-32301	GE Nuclear Energy, MIT and UCB Separate Effects Tests for PCCS Tube Geometry, "Single Tube Condensation Test Program," NEDC-32301, Class II, March 1994.	1.5
NEDO-32465-A	GE Nuclear Energy and BWR Owners' Group, "Reactor Stability Detect and Suppress Solutions Licensing Basis Methodology for Reload Applications," NEDO-32465-A, Class I (Non-proprietary), August 1996.	4D
NEDC-32601 P-A NEDO-32601-A	GE Nuclear Energy, "Methodology and Uncertainties for Safety Limit MCPR Evaluations," NEDC-32601 P-A, Class III (Proprietary), NEDO-32601-A, Class I (Non-proprietary), August 1999.	4.4, Chapter 16 B2.1.1
NEDC-32606P	GE Nuclear Energy, "SBWR Testing Summary Report," NEDC-32606P, Class III (Proprietary), August 2002.	1.5

Table 1.6-1

Referenced GE / GEH Reports

Report No.	Title	Section No.
NEDO-32708	GE Nuclear Energy, "Radiological Accident Evaluation - The CONAC04A Code," NEDO-32708, August 1997.	15.4
NEDC-32725P	GE Nuclear Energy, J. R. Fitch, et al., "TRACG Qualification for SBWR," NEDC-32725P, Class III (Proprietary), Revision 1, Vol. 1 and 2, August 2002.	4D, 6.2
(Deleted)		
NEDC-32868P	Global Nuclear Fuel, "GE14 Compliance With Amendment 22 of NEDE-24011-P-A (GESTAR II)," NEDC-32868P, Class III (Proprietary), Revision 3, April 2009.	4.3
(Deleted)		
NEDE-32906P-A NEDO-32906-A	GE Nuclear Energy, J. G. M. Andersen, et al.,"TRACG Application for Anticipated Operational Occurrences (AOO) Transient Analysis," NEDE-32906P-A, Revision 3, Class III (Proprietary), September 2006, and NEDO-32906-A, Revision 3, Class I (Non-proprietary), September 2006.	1.5, 4D
NEDE-32906P Supplement 1-A NEDO-32906 Supplement 1-A	GE Nuclear Energy, F. T. Bolger and M. A. Holmes, "TRACG Application for Anticipated Transient Without Scram Overpressure Transient Analyses," NEDE-32906P Supplement 1-A, Class III (Proprietary), NEDO-32906 Supplement 1-A, Class I (Non-proprietary), November 2003.	4D
NEDC-32975P-A	GE Nuclear Energy, "Regulatory Relaxation for BWR Loose Parts Monitoring Systems," BWR Owner's Group Licensing Topical Report NEDC-32975P-A, Class III (Proprietary), Revision 0, February 2001.	4.4

Table 1.6-1

Referenced GE / GEH Reports

Report No.	Title	Section No.
NEDC-32983P-A NEDO-32983-A	GE Nuclear Energy, "GE Methodology for Reactor Pressure Vessel Fast Neutron Flux Evaluations," Licensing Topical Report NEDC-32983P-A, Class III (Proprietary), Revision 2, January 2006, and NEDO-32983-A, Class I (Non-proprietary), Revision 2, January 2006.	5.3
NEDO-32991-A	GE Nuclear Energy, "Regulatory Relaxation for BWR Post-Accident Sampling Stations (PASS)," NEDO-32991-A, Class I (Non-proprietary), Revision 0, August 2001.	1.9, 1A, 9.3
NEDC-32992P-A	GE Nuclear Energy, J. S. Post and A. K. Chung, "ODYSY Application for Stability Licensing Calculations," NEDC-32992P-A, Class III (Proprietary), July 2001.	4D
NEDC-33045P	GE Nuclear Energy, "Methods of Estimating Core Damage in BWRs," NEDC-33045P, Class III (Proprietary), Revision 0, July 2001.	9.3
NEDC-33075P-A NEDO-33075-A	GE Hitachi Nuclear Energy, "General Electric Boiling Water Reactor Detect and Suppress Solution – Confirmation Density," NEDC-33075P-A, Class III (Proprietary), and NEDO-33075-A, Class I (Non-proprietary), Revision 6, January 2008.	4D
NEDC-33079P NEDO-33079	GE Nuclear Energy, "ESBWR Test and Analysis Program Description," NEDC-33079P, Class III (Proprietary), Revision 1, March 2005 and NEDO-33079, Class I (Non-proprietary), Revision 1, November 2005.	1.5, 6G
NEDC-33080P	GE Nuclear Energy, J. R. Fitch, et al., "TRACG Qualification for ESBWR," NEDC-33080P, Class III (Proprietary), Revision 1, May 2005.	4D
NEDC-33081P NEDO-33081	GE Nuclear Energy, "ESBWR Test Report," NEDC-33081P, Class III (Proprietary), Revision 1, May 2005, and NEDO-33081, Class I (Non-proprietary), Revision 1, December 2005.	1.5

Table 1.6-1

Referenced GE / GEH Reports

Report No.	Title	Section No.
NEDC-33082P NEDO-33082	GE Nuclear Energy, "ESBWR Scaling Report," NEDC-33082P, Class III (Proprietary), and NEDO-33082, Class I (Non-proprietary), Revision 2, April 2008.	1.5, 6.2, 6.3
NEDC-33083P-A NEDO-33083-A	GE Nuclear Energy, "TRACG Application for ESBWR," NEDC-33083P-A, Class III (Proprietary), March 2005 and NEDO-33083-A, Class I (Non-proprietary), October 2005.	1.5, 4.4, 4D, 6.2, 6.3, 6A, 6B Chapter 16 B2.1.1
NEDE-33083P-A Supplement 1 NEDO-33083-A Supplement 1	GE Hitachi Nuclear Energy, B.S. Shiralkar, et al, "TRACG Application for ESBWR Stability Analysis," NEDE-33083P-A, Supplement 1, Revision 1, Class III (Proprietary), January 2008 and NEDO-33083-A, Supplement 1, Revision 1, Class I (Non-proprietary), January 2008.	1.1, 1.5, 1.9, 4.3, 4D
NEDE-33083P Supplement 2 NEDO-33083 Supplement 2	GE Hitachi Nuclear Energy, "TRACG Application for ESBWR Anticipated Transient Without Scram Analyses," NEDE-33083P, Supplement 2, Revision 2, Class III (Proprietary), September 2009 and NEDO-33083, Supplement 2, Revision 2, Class 1 (Non-proprietary), September 2009.	1.5, 15.5
NEDE-33083P, Supplement 3 NEDO-33083 Supplement 3	GE Hitachi Nuclear Energy, "TRACG Application for ESBWR Transient Analysis," NEDE-33083P, Supplement 3, Class III (Proprietary), and NEDO-33083, Supplement 3, Class 1 (Non-proprietary), Revision 1, September 2009.	1.5, 15.2, 15.3, 15.5 Chapter 16 Sect. 5.6.3
NEDC-33139P-A	Global Nuclear Fuel, "Cladding Creep Collapse," NEDC-33139P-A, Class III (Proprietary), July 2005.	4.2
NEDO-33181	GE Hitachi Nuclear Energy, "NP-2010 COL Demonstration Project Quality Assurance Program," NEDO-33181, Revision 6, August 2009.	17.0, 17.1, 17.4

Table 1.6-1

Referenced GE / GEH Reports

Report No.	Title	Section No.
NEDE-33197P NEDO-33197	GE Hitachi Nuclear Energy, "Gamma Thermometer System for LPRM Calibration and Power Shape Monitoring," NEDE-33197P, Class III (Proprietary), and NEDO-33197, (Non-proprietary), Revision 2, August 2008.	7.7, 14.2
NEDE-33217P NEDO-33217	*[GE Hitachi Nuclear Energy, "ESBWR Man-Machine Interface System and Human Factors Engineering Implementation Plan," NEDE-33217P, Class III (Proprietary) and NEDO-33217, Class I (Non-proprietary), Revision 6, February 2010]*.*	4D, 7B, 13.3, 13.5, 18.1 through 18.13
NEDO-33219	*[GE Hitachi Nuclear Energy, "ESBWR Human Factors Engineering Functional Requirements Analysis Implementation Plan," NEDO-33219, Class I (Non-proprietary), Revision 4, February 2010.]**	18.4
NEDE-33220P NEDO-33220	*[GE Hitachi Nuclear Energy, "ESBWR Human Factors Engineering Allocation of Function Implementation Plan," NEDE-33220P, Class III (Proprietary), and NEDO-33220, Class I (Non-proprietary), Revision 4, February 2010.]**	18.4
NEDE-33221P NEDO-33221	*[GE Hitachi Nuclear Energy, "ESBWR Human Factors Engineering Task Analysis Implementation Plan," NEDE-33221P, Class III (Proprietary), and NEDO-33221, Class I (Non-proprietary), Revision 4, February 2010.]**	18.5
NEDE-33226P NEDO-33226	*[GE Hitachi Nuclear Energy, "ESBWR – Software Management Program Manual," NEDE-33226P, Class III (Proprietary), Revision 5, February 2010, and NEDO-33226, Class I (Non-proprietary),Revision 5, February 2010.]**	7.1, 7.2, 7.3, 7B
NEDC-33237P NEDO-33237	*[Global Nuclear Fuel, "GE14 for ESBWR – Critical Power Correlation, Uncertainty, and OLMCPR Development," NEDC-33237P, Class III (Proprietary), and NEDO-33237, Class I (Non-proprietary), Revision 4, July 2008.]**	4.4, Chapter 16 B2.1.1, B3.2.2

Table 1.6-1

Referenced GE / GEH Reports

Report No.	Title	Section No.
NEDC-33238P NEDO-33238	Global Nuclear Fuel, "GE14 Pressure Drop Characteristics", NEDC-33238P, Class III (Proprietary), and NEDO-33238, Class I (Non-proprietary), December 2005.	4.4
NEDC-33239P NEDO-33239	*[Global Nuclear Fuel, "GE14 for ESBWR Nuclear Design Report," NEDC-33239-P, Class III (Proprietary) and NEDO-33239, Class I (Non-proprietary), Revision 4, March 2009.]**	4.3, 4.4, 4A, 4D, 15.0, 15.2, 15.3, 15.5, Chapter 16 B3.1.1
NEDC-33240P NEDO-33240	*[Global Nuclear Fuel, "GE14E Fuel Assembly Mechanical Design Report," NEDC-33240P, Class III (Proprietary), and NEDO-33240, Class I (Non-proprietary), Revision 1, January 2009.]**	4.2
NEDC-33242P NEDO-33242	*[Global Nuclear Fuel, "GE14 for ESBWR Fuel Rod Thermal-Mechanical Design Report," NEDC-33242P, Class III (Proprietary), and NEDO-33242, Class I (Non-proprietary), Revision 2, June 2009.]**	4.2
NEDE-33243P	*[GE Hitachi Nuclear Energy, "ESBWR Control Rod Nuclear Design," NEDE-33243P, Class III (Proprietary), Revision 2, July 2008.]**	4.2, Chapter 16 B3.1.3
NEDE-33244P	*[GE Hitachi Nuclear Energy, "ESBWR Marathon Control Rod Mechanical Design Report," NEDE-33244P, Class III (Proprietary), Revision 1, November 2007]*.*	4.2
NEDE-33245P NEDO-33245	*[GE Hitachi Nuclear Energy, "ESBWR – Software Quality Assurance Program Manual," NEDE-33245P, Class III (Proprietary), Revision 5, February 2010, and NEDO-33245, Class I (Non-proprietary),Revision 5, February 2010.]**	7.1, 7.2, 7.3, 7.8, 7B, 17.1
NEDO-33251	GE Hitachi Nuclear Energy, "ESBWR I&C Diversity and Defense-In-Depth Report", NEDO-33251, Class I (Non-proprietary), Revision 2, May 2009.	7.1, 7.8

Table 1.6-1

Referenced GE / GEH Reports

Report No.	Title	Section No.
NEDE-33259P NEDO-33259	GE Hitachi Nuclear Energy, "Reactor Internals Flow Induced Vibration Program," NEDE-33259P, Class III (Proprietary), Revision 2, June 2009, and NEDO-33259, Class I (Non-proprietary), Revision 2, June 2009.	3L
NEDO-33260	GE Hitachi Nuclear Energy, "Quality Assurance Requirements for Suppliers of Equipment and Services to the GEH ESBWR Project," NEDO-33260, Revision 5, April 2008.	17.0
NEDE-33261P NEDO-33261	*[GE Hitachi Nuclear Energy, "ESBWR Containment Load Definition," NEDE-33261P, Class III (Proprietary) and NEDO-33261, Class I (Non-proprietary), Revision 2, June 2008.]**	3.8, 3B
NEDO-33262	*[GE Hitachi Nuclear Energy, "ESBWR Human Factors Engineering Operating Experience Review Implementation Plan," NEDO-33262, Class I (Non-proprietary), Revision 3, January 2010.]**	18.3
NEDO-33266	*[GE Hitachi Nuclear Energy, "ESBWR Human Factors Engineering Staffing and Qualifications Implementation Plan," NEDO-33266, Class I (Non-proprietary), Revision 3, January 2010.]**	18.6
NEDO-33267	*[GE Hitachi Nuclear Energy, "ESBWR Human Factors Engineering Human Reliability Analysis Implementation Plan," NEDO-33267, Class I (Non-proprietary), Revision 4, January 2010.] **	18.7
NEDE-33268P NEDO-33268	*[GE Hitachi Nuclear Energy, "ESBWR Human Factors Engineering Human-System Interface Design Implementation Plan," NEDE-33268P, Class III (Proprietary), and NEDO-33268, Class I (Non-proprietary), Revision 5, February 2010.]**	18.8
NEDO-33274	*[GE Hitachi Nuclear Energy, "ESBWR Human Factors Engineering Procedures Development Implementation Plan," NEDO-33274, Class I (Non-proprietary), Revision 5, February 2010.]**	18.9

Table 1.6-1

Referenced GE / GEH Reports

Report No.	Title	Section No.
NEDO-33275	*[GE Hitachi Nuclear Energy, "ESBWR Human Factors Engineering Training Development Implementation Plan," NEDO-33275, Class I (Non-proprietary), Revision 4, January 2010.]**	18.10
NEDE-33276P NEDO-33276	*[GE Hitachi Nuclear Energy, "ESBWR Human Factors Engineering Verification and Validation Implementation Plan," NEDE-33276P, Class III (Proprietary), and NEDO-33276, Class I (Non-proprietary), Revision 4, February 2010.]**	18.11
NEDO-33277	*[GE Hitachi Nuclear Energy, "ESBWR Human Factors Engineering Human Performance Monitoring Implementation Plan," NEDO-33277, Class I (Non-proprietary), Revision 4, January 2010.]**	18.13
NEDO-33278	*[GE Hitachi Nuclear Energy, "ESBWR Human Factors Engineering Design Implementation Plan," NEDO-33278, Class I (Non-proprietary), Revision 4, January 2010.]**	18.12
NEDE-33279P NEDO-33279	GE Hitachi Nuclear Energy, "ESBWR Containment Fission Product Removal Evaluation Model," NEDE-33279P, Class III (Proprietary), and NEDO-33279, Class I (Non-proprietary), Revision 3, June 2009.	15.4, 15C
NEDO-33289	GE Hitachi Nuclear Energy, "ESBWR Reliability Assurance Program," NEDO-33289, Class I (Non-proprietary), Revision 2, September 2008.	17.4
NEDE-33295P NEDO-33295	*GE Hitachi Nuclear Energy, "ESBWR Cyber Security Program Plan," NEDE-33295P, Class III (Proprietary), Revision 1, July 2009, and NEDO-33295, Class I (Non-proprietary), Revision 1, July 2009.]**	7.1, 7B
NEDE-33304P NEDO-33304	GE-Hitachi Nuclear Energy, "GEH ESBWR Setpoint Methodology," NEDE-33304P, Class III (Proprietary), and NEDO-33304, Class I (Non-proprietary), Revision 3, February 2010.	7.1, 7.2, 7.3, 7.4, 7.5, 7.8 Chapter 16 Sect. 5.5.11

Table 1.6-1

Referenced GE / GEH Reports

Report No.	Title	Section No.
NEDO-33306	GE Hitachi Nuclear Energy, "ESBWR Severe Accident Mitigation Design Alternatives," NEDO-33306, Class I (Non-proprietary), Revision 1, August 2007.	19.2
NEDE-33312P NEDO-33312	GE Hitachi Nuclear Energy, "ESBWR Steam Dryer Acoustic Load Definition," NEDE-33312P, Class III (Proprietary), Revision 1, July 2009, and NEDO-33312, Class I (Non-Proprietary), Revision 1, July 2009.	3L
NEDE-33313P NEDO-33313	GE Hitachi Nuclear Energy, "ESBWR Steam Dryer Structural Evaluation," NEDE-33313P, Class III (Proprietary), Revision 1, July 2009, and NEDO-33313, Class I (Non-Proprietary), Revision 1, July 2009.	3.9, 3L
NEDC-33326P NEDO-33326	*[Global Nuclear Fuel, "GE14E for ESBWR Initial Core Nuclear Design Report," NEDC-33326P, Class III (Proprietary), and NEDO-33326, Class I (Non-proprietary), Revision 1, March 2009.*]*	4.3, 4.4, 4A, 4D, 15.0, 15.2, 15.3, 15.5
NEDO-33337	GE Hitachi Nuclear Energy, "ESBWR Initial Core Transient Analyses," NEDO-33337, Class I (Non-proprietary), Revision 1, April 2009.	4.4, 4D, 15.0, 15.2, 15.3, 15.5, 15D
NEDO-33338	GE Hitachi Nuclear Energy, "ESBWR Feedwater Temperature Operating Domain Transient and Accident Analysis," NEDO-33338, Class I (Non-proprietary), Revision 1, May 2009.	1.1, 4.4, 4D, 6.2, 6.3, 15.0, 15.2, 15.3, 15.5, 15D Chapter 16, Sect. 5.6.3
NEDO-33373	GE-Hitachi Nuclear Energy, "Dynamic, Load-Drop, and Thermal-Hydraulic Analyses for ESBWR Fuel Racks," NEDO-33373, Revision 4, Class I (Non-proprietary), March 2010.	9.1

Table 1.6-1

Referenced GE / GEH Reports

Report No.	Title	Section No.
NEDC-33374P NEDO-33374	[*GE-Hitachi Nuclear Energy, "Safety Analysis Report for Fuel Storage Racks Criticality Analysis for ESBWR Plants," NEDC-33374P, Revision 3, Class II (Proprietary) December 2009, and NEDO-33374, Revision 1, Class I (Non-proprietary), December 2008.*]*	9.1
NEDE-33391	GE Hitachi Nuclear Energy, "ESBWR Safeguards Assessment Report," NEDE-33391, Revision 3, March 2010 – Safeguards Information.	13.6
NEDC-33408P NEDO-33408	GE Hitachi Nuclear Energy, "ESBWR Steam Dryer – Plant Based Load Evaluation Methodology," NEDC-33408P, Class III (Proprietary), Revision 1, July 2009, and NEDO-33408, Class I (Non-proprietary), Revision 1, July 2009.	3L
NEDC-33408P Supplement 1 NEDO-33408 Supplement 1	GE Hitachi Nuclear Energy, "ESBWR Steam Dryer – Plant Based Load Evaluation Methodology," NEDC-33408P Supplement 1, Class III (Proprietary), and NEDO-33408 Supplement 1, Class I (Non-proprietary), Revision 1, August 2009	3L
NEDO-33411	GE Hitachi Nuclear Energy, "Risk Significance of Structures, Systems and Components for the Design Phase of the ESBWR," NEDO-33411, Class I (Non-proprietary), Revision 1, July 2009.	17.4
NEDE-33440P NEDO-33440	GE Hitachi Nuclear Energy "ESBWR Safety Analysis – Additional Information," NEDE-33440P, Class III (Proprietary), and NEDO-33440, Class I (Non-proprietary), Revision 2, March 2010.	3.6, 6.2
NEDC-33456P NEDO-33456	*[Global Nuclear Fuel, "Full-Scale Pressure Drop Testing for a Simulated GE14E Fuel Bundle," NEDC-33456P, Class III (Proprietary), and NEDO-33456, Class I (Non-proprietary), Revision 0, March 2009.]**	4.4

Table 1.6-1

Referenced GE / GEH Reports

Report No.	Title	Section No.
NEDE-33516P	[*GE Hitachi Nuclear Energy, "ESBWR Qualification Plan Requirements for a 72-Hour Duty Cycle Battery," NEDE-33516P, Class III (Proprietary), Revision 2, December 2009.*]*	3.11
NEDE-33536P NEDO-33536	[*GE-Hitachi Nuclear Energy, "Control Building and Reactor Building Environmental Temperature Analysis for ESBWR," NEDE-33536P, Class III (Proprietary), Revision 0, December 2009, NEDO-33536, Class I (Non-proprietary), Revision 0, December 2009.*]*	3H
NEDE-33572P NEDO-33572	GE Hitachi Nuclear Energy, "ESBWR PCCS Condenser Structural Evaluation," NEDE-33572P, Class II (Proprietary), Revision 0, March 2010; NEDO-33572, Revision 0, Class I (Non-proprietary), March 2010.	3G.1, 3.8, 5.4, 6.2

* References that are bracketed and italicized with an asterisk following the brackets are designated as Tier 2*. Prior NRC approval is required to change Tier 2* information.

Table 1.6-2

Referenced non-GE / GEH Topical Reports

Report No.	Title	Section No.
BC-TOP-3-A	Bechtel, "Tornado and Extreme Wind Design Criteria for Nuclear Power Plants," Topical Report BC-TOP-3-A, Revision 3, August 1974.	3.3
BC-TOP-9A	Bechtel, "Design of Structures for Missile Impact," Topical Report BC-TOP-9A, Revision 2, September 1974.	3.5
	BWR Owners' Group Emergency Procedures Committee, "BWR Owners' Group Emergency Procedure and Severe Accident Guidelines," Revision 2, March 2001.	18.5

1.7 DRAWINGS AND OTHER DETAILED INFORMATION

Proprietary and safeguards information are not provided in the publicly available version of this document. For example, detailed proprietary design drawings are not included. As needed, proprietary and safeguards information are referenced and supplied separately. The requirements that a site-specific plant design shall meet are described herein. Therefore, the design/safety features and functions shown on the design related drawings provided herein are required to be included in the site-specific design drawings. For example, a system's site-specific piping and instrumentation diagram (P&ID) is required to provide all the features shown on that system's simplified P&ID contained herein.

1.7.1 Electrical, Instrumentation and Control Drawings

Where appropriate, non-proprietary (simplified, as needed) electrical, instrumentation and control drawings are provided within this document. These drawings provide design information or show how the subject systems and components perform their associated safety function(s). Table 1.7-2 provides a summary of the electrical, instrumentation and control system configuration drawings found throughout this document.

1.7.2 Piping and Instrumentation Diagrams

The extensive level of detail in a fully engineered P&ID can provide far more information than is needed to demonstrate safety. This high level of detail would not clearly highlight the safety aspects of the system and thus can make it more difficult to understand the basic functions of the system. Where appropriate, simplified P&IDs are provided throughout this document. These P&IDs provide needed design information or demonstrate how the subject systems and components perform their associated safety function(s). Figures 1.7-1 through 1.7-4 illustrate the symbols used on the simplified P&IDs that appear throughout this document. Table 1.7-3 provides a summary of the mechanical system configuration drawings found throughout this document.

1.7.3 Other Detailed Information

Where appropriate, simplified site buildings and individual structure drawings are provided within this document. These drawings provide needed layout/design information or demonstrate how the site or subject structure performs its associated safety function(s).

Other detailed information is provided by reference in the applicable sections.

Table 1.7-1 lists the standard piping designations and specifications used in the drawings.

1.7.4 COL Information

1.7-1-H Final Design Configuration Confirmation

(Deleted)

Table 1.7-1

Piping Designations and Specifications for DCD Drawings

Standard Line Designation	Service	Operating Fluid Temperature Range	Primary Rating	Material
AA	Condensate / Reactor Water	-30 to 260°C (-20 to 500°F)	150 LB	Carbon Steel
AB	Condensate / Reactor Water	-30 to 260°C (-20 to 500°F)	150 LB	Stainless Steel
AC	Steam	up to 260°C (500°F)	150 LB	Carbon Steel
AD **	Service Water	5 to 40°C (40 to 105°F)	150 LB	Carbon Steel
AE	Radwaste	-30 to 260°C (-20 to 500°F)	150 LB	Carbon Steel
AF	Radwaste	-30 to 260°C (-20 to 500°F)	150 LB	Stainless Steel
AG	Demineralized Water	See note *	150 LB	Aluminum
AH	Steam Condensate	up to 260°C (500°F)	150 LB	Carbon Steel
AL	Fuel Oil	-30 to 260°C (-20 to 500°F)	150 LB	Carbon Steel
AM	Instrument Air	10 to 46°C (50 to 115°F)	150 LB	Stainless Steel
AN	Gaseous Nitrogen	10 to 177°C (50 to 350°F)	150 LB	Stainless Steel
AO	Gaseous Nitrogen	10 to 120°C (50 to 250°F)	150 LB	Stainless Steel
AP	Component Cooling Water	10 to 60°C (50 to 140°F)	150 LB	Carbon Steel
AQ	Demineralized Water	10 to 60°C (50 to 140°F)	150 LB	Stainless Steel
AR	Equipment/ Floor Drains	10 to 60°C (50 to 140°F)	150 LB	Stainless Steel
AS	Service Air	10 to 46°C (50 to 115°F)	150 LB	Stainless Steel
AT	Fire Water	0 to 38°C (32 to 100°F)	150 LB	HDPE
AU	Fire Water	0 to 38°C (32 to 100°F)	150 LB	Carbon Steel

Table 1.7-1

Piping Designations and Specifications for DCD Drawings

Standard Line Designation	Service	Operating Fluid Temperature Range	Primary Rating	Material
AV	Fire Water	0 to 38°C (32 to 100°F)	150 LB	Galvanized Steel
AW	Fire Water	0 to 38°C (32 to 100°F)	150 LB	Stainless Steel
BA	Condensate / Reactor Water	-30 to 260°C (-20 to 500°F)	300 LB	Carbon Steel
BB	Condensate / Reactor Water	-30 to 260°C (-20 to 500°F)	300 LB	Stainless Steel
BC	Steam	up to 260°C (500°F)	300 LB	Carbon Steel
BD	Service Water	-30 to 260°C (-20 to 500°F)	300 LB	Carbon Steel
BE	Steam Condensate	up to 260°C (500°F)	300 LB	Carbon Steel
BF	Offgas	-30 to 260°C (-20 to 500°F)	300 LB	Carbon Steel
BG	Liquid Nitrogen	-196 to 65.5°C (-320 to 150°F)	300 LB	Stainless Steel
BH	Gaseous Nitrogen	10 to 120°C (50 to 250°F)	300 LB	Stainless Steel
DA	Condensate / Reactor Water	-30 to 345°C (-20 to 650°F)	600 LB	Carbon Steel
DB	Condensate / Reactor Water	-30 to 345°C (-20 to 650°F)	600 LB	Stainless Steel
DC	Steam	up to 345°C (650°F)	600 LB	Carbon Steel
DD	Offgas	-30 to 260°C (-20 to 500°F)	600 LB	Carbon Steel
DE	Offgas	-45 to 120°C (-50 to 250°F)	600 LB	Carbon Steel
DF	Offgas	-30 to 260°C (-20 to 500°F)	600 LB	Stainless Steel
DG	Gaseous Nitrogen	10 to 120°C (50 to 250°F)	600 LB	Stainless Steel

Table 1.7-1

Piping Designations and Specifications for DCD Drawings

Standard Line Designation	Service	Operating Fluid Temperature Range	Primary Rating	Material
EA	Condensate / Reactor Water	-30 to 345°C (-20 to 650°F)	900 LB	Carbon Steel
EB	Condensate / Reactor Water	-30 to 345°C (-20 to 650°F)	900 LB	Stainless Steel
EC	Steam	up to 345°C (650°F)	900 LB	Carbon Steel
ED	Boiler Feedwater	up to 345°C (650°F)	900 LB	Carbon Steel
EF	Steam / Boiler Feedwater	up to 345°C (650°F)	900 LB	Low Alloy Steel
FA	Offgas	-30 to 260°C (-20 to 500°F)	1500 LB	Low Alloy Steel
FB	Offgas	-30 to 480°C (-20 to 900°F)	1500 LB	Low Alloy Steel
FC	Condensate / Reactor Water	up to 65°C (up to 150°F)	1500 LB	Carbon Steel
FD	Condensate / Reactor Water, Liquid and Gaseous Nitrogen, Boron Solution	-196 to 260°C (-320 to 500°F)	1500 LB	Stainless Steel
FE	Feedwater System	up to 240ºC (464ºF)	1500 LB	Low Alloy Steel
GA	Offgas	-30 to 480°C (-20 to 900°F)	2500 LB	Low Alloy Steel
GB	Gaseous Nitrogen	10 to 120°C (50 to 250°F)	2500 LB	Stainless Steel

Notes for Table 1.7-1:

* Under special requirements and as part of a module.

** Plant Service Water System requires carbon steel for fresh water applications. Sites taking service water from a brackish water source will require alternative alloy materials (e.g., SB804 pipe with titanium heat exchangers).

Table 1.7-2

Summary of Electrical/I&C System Configuration Drawings

Fig. No.	Title
7.1-1	Simplified Network/Functional Diagram of DCIS
7.2-1	Reactor Protection System (RPS) Functional Block Diagram
7.2-2	RPS Interfaces and Boundaries Diagram
7.3-1a	Safety-Relief Valve Initiation Logics
7.3-1b	Gravity-Driven Cooling System (GDCS) and Depressurization Valve Initiation Logics
7.3-1c	Diverse Protection System Initiation Logic
7.3-2	GDCS Equalizing Valve Initiation Logics
7.3-3	Leak Detection and Isolation System Design Configuration
7.3-4	Safety System Logic and Control/Engineered Safety Feature (SSLC/ESF) Functional Block Diagram
7.3-5	SSLC/ESF System Interface Diagram
7.4-2a	Reactor Water Cleanup/Shutdown Cooling (RWCU/SDC) System Train A Differential Mass Flow Logic – Division 1
7.4-2b	RWCU/SDC System Train A Differential Mass Flow Logic – Division 2
7.4-2c	RWCU/SDC System Train A Differential Mass Flow Logic – Division 3
7.4-2d	RWCU/SDC System Train A Differential Mass Flow Logic – Division 4
7.4-2e	RWCU/SDC Line Break Outside Containment Train A Isolation Logic
7.4-3	Isolation Condenser System Initiation and Actuation
7.5-3	Area Radiation Monitoring System Functional Block Diagram
7.7-2	Rod Control and Information System Block Diagram
7.7-3	Feedwater Control System Functional Diagram
7.7-4	Plant Automation System Simplified Functional Diagram
7.7-5	Steam Bypass and Pressure Control (SB&PC) System Simplified Functional Block Diagram
7.7-6	SB&PC System Fault-Tolerant Digital Controller Block Diagram

Table 1.7-2

Summary of Electrical/I&C System Configuration Drawings

Fig. No.	Title
7.7-7	High Pressure Feedwater Heater Temperature Control Diagram
7.8-1	Simplified Diverse Protection System Block Diagram
7.8-2	Alternate Rod Insertion and Fine Motion Control Rod Drive Run-In Logic
7.8-3	Anticipated Transient Without Scram (ATWS) Mitigation Logic (Standby Liquid Control System Initiation, Feedwater Runback)
7.8-4	Diverse Engineered Safety Feature Triple Redundant Logic
8.1-1	Electrical Power Distribution System
8.1-2	Direct Current Power Supply (Nonsafety-Related)
8.1-3	Direct Current Power Supply (Safety-Related)
8.1-4	Uninterruptible AC Power Supply (Safety-Related)
8.1-5	Uninterruptible AC Power Supply (Nonsafety-Related)
8.3-1	Safety-Related 480 Volt Power Centers
8.3-2	Nonsafety-Related 480 Volt Power Centers
8.3-3	Ancillary Power Functional Figure

Table 1.7-3

Summary of Mechanical System Configuration Drawings

Fig. No.	Title
4.6-8	Control Rod Drive System Simplified Process and Instrumentation Diagram
4.6-9	Control Rod Drive System Process Flow Diagram
5.1-2	Nuclear Boiler System Schematic
5.1-3	Isolation Condenser System Schematic
5.1-4	Reactor Water Cleanup/Shutdown Cooling System Schematic
5.4-4b	Isolation Condenser System Simplified Process Diagram
6.2-16	Passive Containment Cooling System Schematic Diagram
6.2-29	Containment Inerting System Simplified System Diagram
6.3-1	Gravity-Driven Cooling System (GDCS) Configuration
6.3-1a	GDCS Typical Process Flows
6.4-1	Control Room Habitability Area HVAC Subsystem Schematic Diagram
7.5-1	Containment Monitoring System Design
9.1-1	Fuel and Auxiliary Pools Cooling System Schematic Diagram
9.2-1	Plant Service Water System Simplified Diagram
9.2-2a and 2b	Reactor Component Cooling Water System
9.2-3	Chilled Water System Simplified Diagram
9.2-4	Turbine Component Cooling Water System Configuration
9.3-1	Standby Liquid Control System Simplified Diagram
9.3-1a	Standby Liquid Control System Simplified Process Flow Diagram
9.3-3	Service Air and Instrument Air System Simplified Diagram
9.3-4	High Pressure Nitrogen Supply System Simplified Diagram
9.3-5	Hydrogen Water Chemistry System Simplified Diagram
9.4-1	Control Room Habitability Area HVAC Subsystem (CRHAVS) Simplified System Diagram
9.4-2	CRHAVS Air Flow Diagram
9.4-3	CBGAVS SET A Simplified System Diagram

Table 1.7-3

Summary of Mechanical System Configuration Drawings

Fig. No.	Title
9.4-4	CBGAVS SET B Simplified System Flow Diagram
9.4-5	Fuel Building General Area HVAC Subsystem Simplified System Diagram
9.4-6	Fuel Building Fuel Pool Area HVAC Subsystem Simplified System Diagram
9.4-7a and 7b	Radwaste Building HVAC System Simplified System Diagrams
9.4-8	Turbine Building HVAC System Simplified System Diagram
9.4-9	Clean Area HVAC Subsystem Simplified System Diagram (Typical Train A/B)
9.4-10	Contaminated Area HVAC Subsystem Simplified System Diagram (Typical Train A/B)
9.4-11	Refueling and Pool Area HVAC Subsystem Simplified System Diagram
9.4-12	Electrical Building HVAC System Simplified System Diagram
9.4-13	Drywell Cooling System Simplified System Diagram
9.5-1	Fire Protection System Simplified Diagram
9.5-9	Standby Diesel Generator Fuel Oil Storage and Transfer System & Air Intake and Exhaust System Diagram
9.5-9a	Ancillary Diesel Generator Fuel Oil Storage and Transfer System Diagram
9.5-10	Standby Diesel Generator Jacket Cooling Water System Diagram
9.5-11	Standby Diesel Generator Starting Air System Diagram
9.5-12	Standby Diesel Generator Lubrication System Diagram
11.2-1	Liquid Waste Management System Processing Diagram
11.3-1	Offgas System
11.4-1	Solid Waste Management System Process Diagram
11.5-1	Location of Radiation Monitors

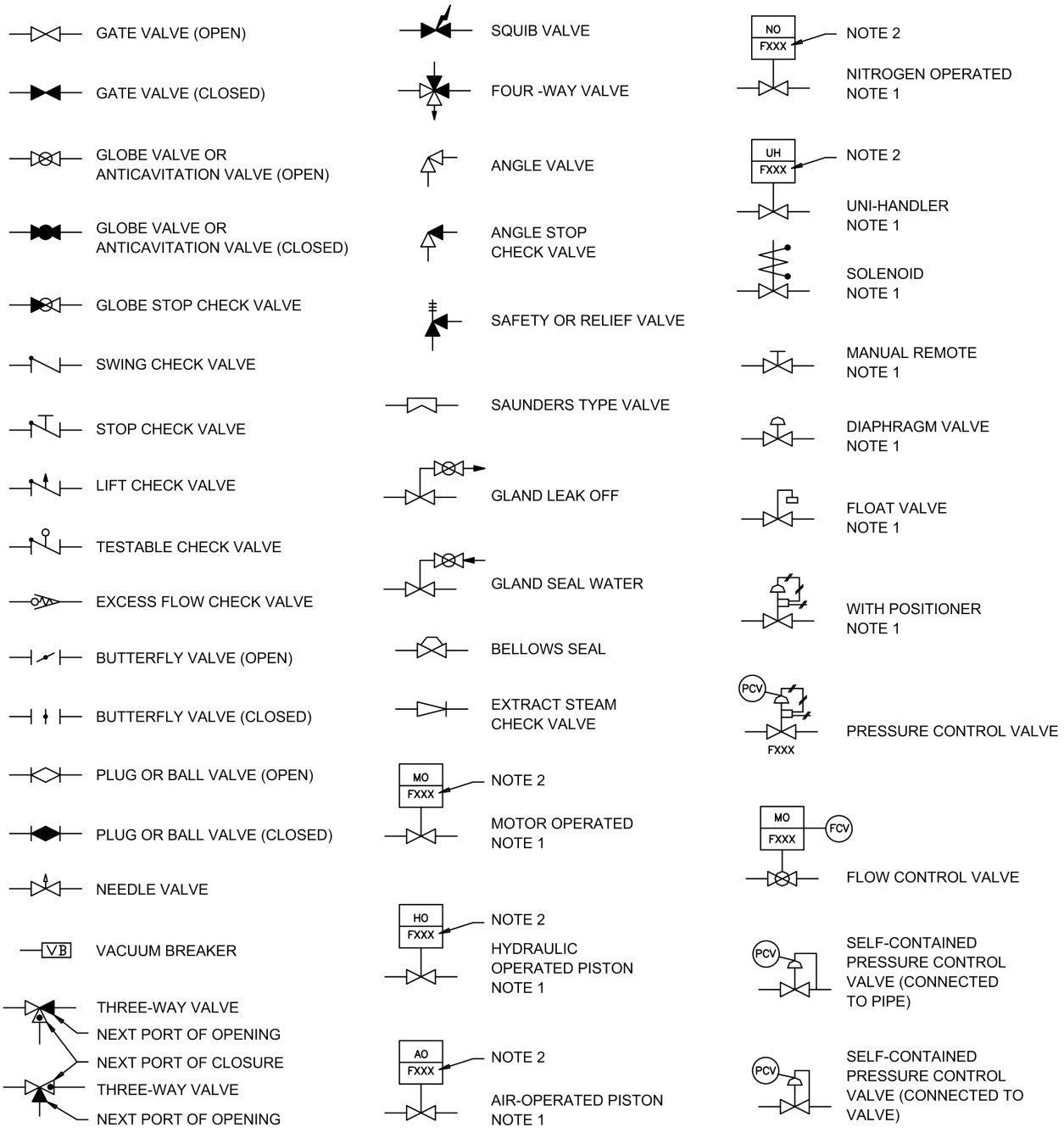

NOTES:

(1) Symbol shows actuator on a gate valve for demonstration purposes only. For application of the actuator to other valve types, the gate valve symbol is replaced by the appropriate valve symbol.

(2) Valve number to which the actuator belongs

Figure 1.7-1. P&ID Symbols for Valves and Valve Actuators

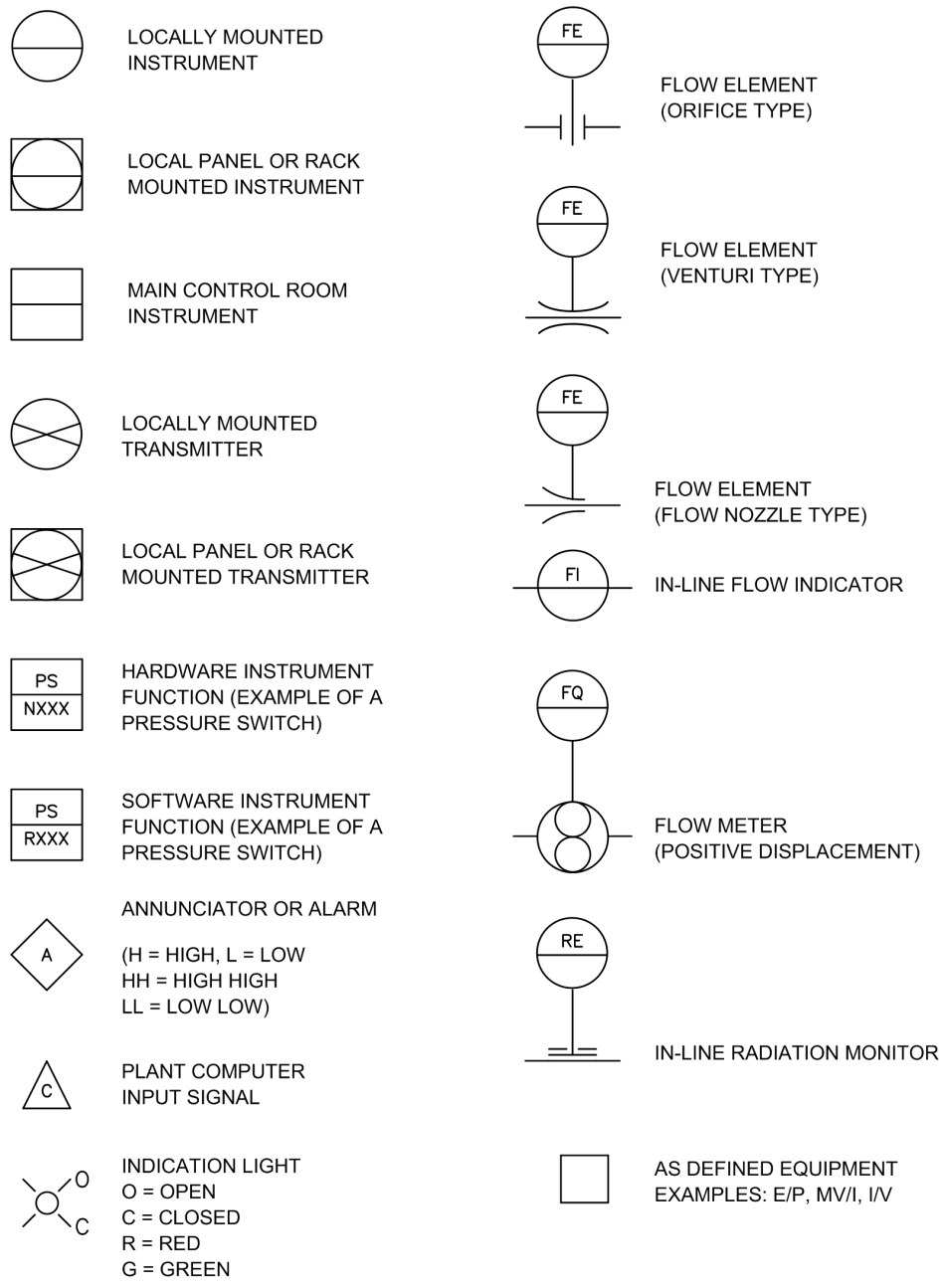

Figure 1.7-2. P&ID Symbols for Instruments

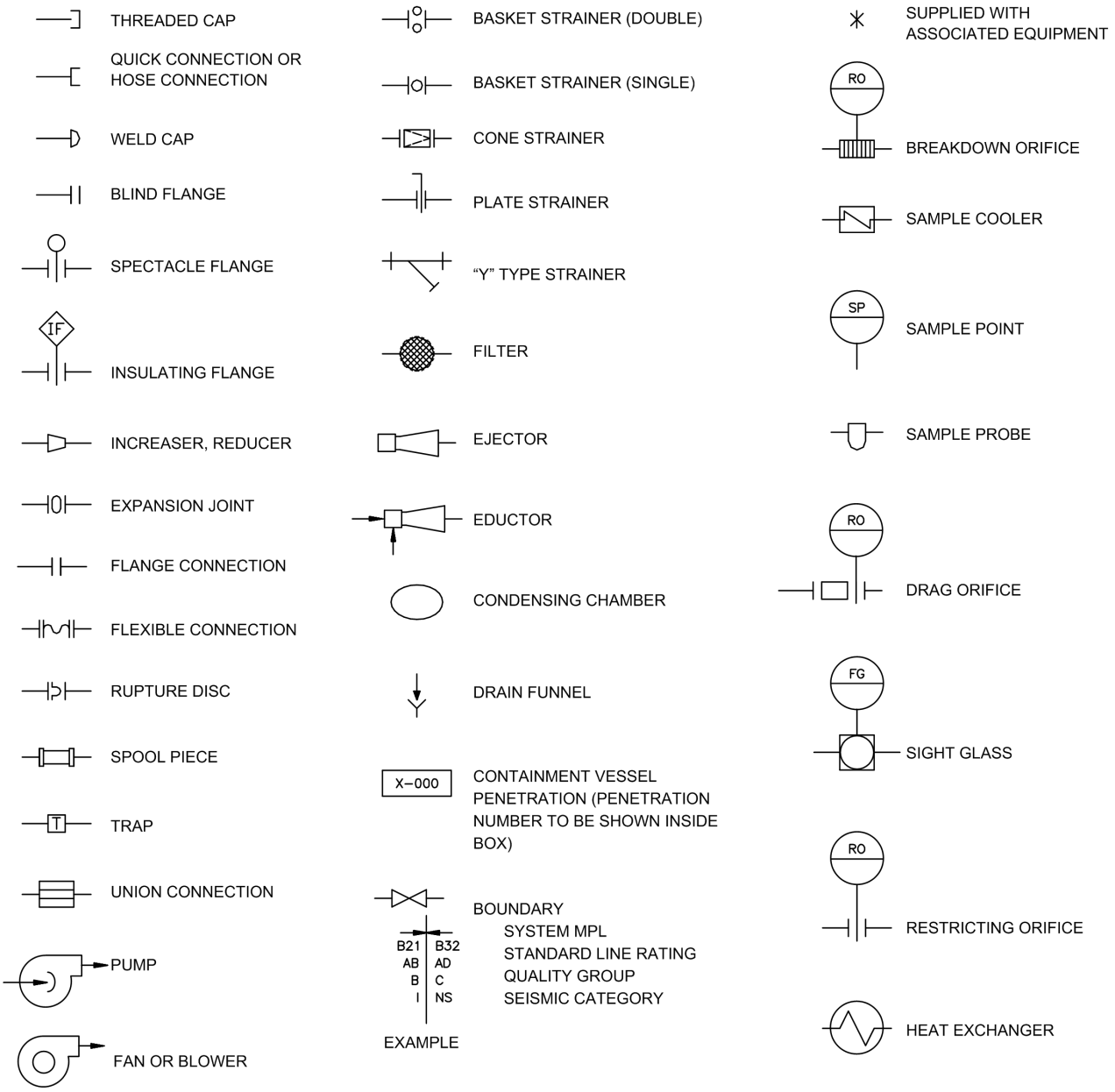

Figure 1.7-3. Miscellaneous P&ID Symbols

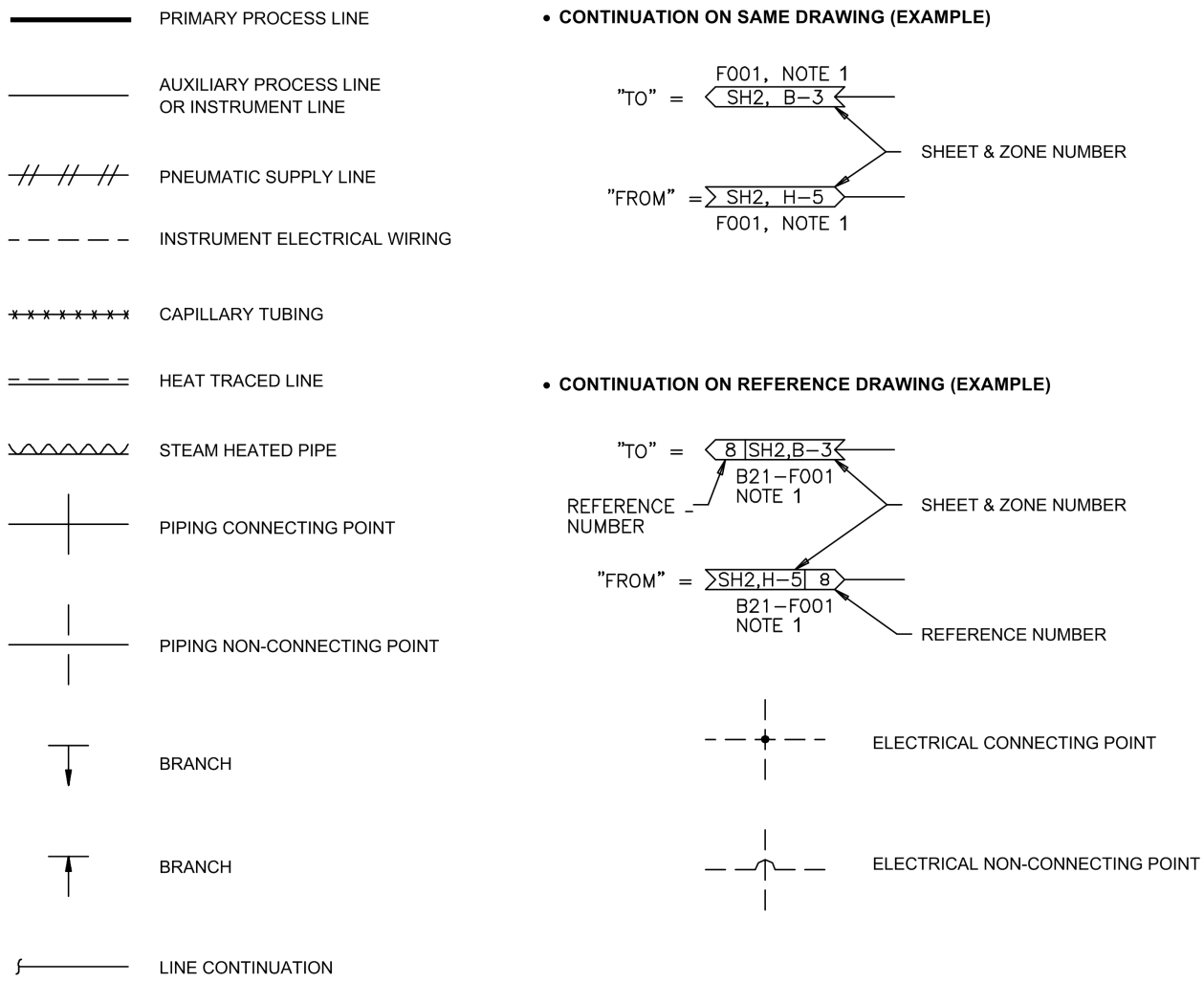

Note 1: Gives the equipment identification number from or to which the line is connected.

Figure 1.7-4. P&ID Symbols for Piping, Instrument and Electrical Lines and Line Continuations

1.8 INTERFACES WITH STANDARD DESIGN

This section is based on Standard Review Plan Section 1.8 and Regulatory Guide 1.70 Appendix A guidance, to identify site-specific interfaces with those portions of the ESBWR Standard Plant.

1.8.1 Identification of Nuclear Steam Supply System Safety-Related Interfaces

Table 1.8-1 cross references the Nuclear Steam Supply System (NSSS) safety-related systems and supporting interface areas with the matching portions of the plant and the associated section(s)/subsection(s) where they are described.

All interface requirements for safety-related systems are addressed in the Design Control Document (DCD).

1.8.2 Identification of Balance of Plant Interfaces

Table 1.8-2 cross references the Balance of Plant (BOP) systems and supporting interface areas with the matching portions of the plant and the associated section(s)/subsection(s) where they are described. Except for post-accident main control room atmosphere control, the ESBWR has no safety-related BOP system, i.e., all service/cooling/makeup water and all other heating, ventilation and air conditioning (HVAC) systems are nonsafety-related. Therefore, it is not the intent of Table 1.8-2 to address all of the BOP systems, but Table 1.8-2 does address the major BOP systems.

The ESBWR DCD includes designs for the following BOP systems for the purposes of allowing the NRC to evaluate the overall acceptability of the design. The referenced sections indicate whether or not the design of these systems for ESBWR is considered to be a conceptual design.

1.8.2.1 Circulating Water System

The Circulating Water System (CIRC) includes those portions outside the Turbine Building walls as well as the specific design interfaces with the main condenser. The circulating water system is designed to remove heat from the main condenser and transport it to the environment. CIRC is described in Subsection 10.4.5.

1.8.2.2 Plant Service Water System

The Plant Service Water System (PSWS) is designed to remove heat from the Reactor and Turbine Component Cooling Water Systems (RCCWS and TCCWS). PSWS is described in Subsection 9.2.1.

1.8.2.3 Off-site Electrical Power

The offsite power transmission system is described in Sections 8.1 and 8.2.

1.8.2.4 Makeup Water System

The Makeup Water System (MWS) provides for the production and distribution of demineralized water. MWS is described in Subsection 9.2.3.

1.8.2.5 Potable and Sanitary Water

Potable and Sanitary Water systems are described in Subsection 9.2.4.

1.8.2.6 Communications Systems

The communications systems of the ESBWR are described in Subsection 9.5.2. Communication links between the on-site Nonsafety-Related Distributed Control and Information System (N-DCIS) and other on-site and offsite facilities such as the Technical Support Center, Emergency Operations Facility and the simulator are included in the design.

1.8.2.7 Station Water System

The Station Water System is described in Subsection 9.2.10.

1.8.2.8 Independent Spent Fuel Storage Installation

The Independent Spent Fuel Storage Installation (i.e., building DS on Figure 1.1-1) shall be located outside of the low-trajectory turbine missile strike zone that is defined in Regulatory Guide 1.115. This requirement is discussed in Subsections 3.5.1.1.1.2, 10.1 and 10.2.

Table 1.8-1

Matrix of NSSS Interfaces

Interface Areas	Items on Matching Portion of Plant												
	Feedwater System	Main Steam System	Component Cooling Water Systems (nonsafety-related)	Offsite Power System	Onsite AC Power System	Containment	Safety-Related Ventilation System	Radwaste Management	Control Building	DC Power Supply	Reactor Building	Fuel Building	Location(s) where discussed
System Interface Areas (safety-related portions)													
Reactor Pressure Vessel System	X	X				X							5.2, 5.3
Nuclear Boiler System	X	X				X			X	X	X		5.2, 5.4.5, 5.4.9
Isolation Condenser System		X				X			X	X	X		5.4.6
Control Rod Drive System			X		X	X			X	X	X		4.6
Leak Detection and Isolation System		X				X			X	X	X		7.3.3
Standby Liquid Control System						X			X	X	X		9.3.5
Neutron Monitoring System						X			X	X	X		7.2.2
Safety-Related DCIS		X				X			X	X	X		7.1.2, 7.1.3
Reactor Protection System		X				X			X	X	X		7.2
Safety System Logic and Control	X	X				X			X	X	X		7.3.5
Process Radiation Monitoring System		X			X	X			X		X	X	7.5.3
Containment Monitoring System					X	X			X		X		7.5.2
Gravity-Driven Cooling System						X			X	X			6.3.2.7
Fuel and Auxiliary Pools Cooling System			X		X	X			X	X	X	X	9.1.3
Main Control Room Panels and MCR Equipment Room Panels					X		X		X	X			7.1.5, 18.1

Table 1.8-1

Matrix of NSSS Interfaces

Interface Areas	Items on Matching Portion of Plant												
	Feedwater System	Main Steam System	Component Cooling Water Systems (nonsafety-related)	Offsite Power System	Onsite AC Power System	Containment	Safety-Related Ventilation System	Radwaste Management	Control Building	DC Power Supply	Reactor Building	Fuel Building	Location(s) where discussed
Remote Shutdown System			X		X				X		X		7.4.2
Passive Containment Cooling System						X					X		6.2.2
Containment Inerting System						X			X		X		6.2.5.2
Reactor Water Cleanup / SDC	X		X		X	X		X			X		5.4.8
Suppression Pool Temperature Monitoring Subsystem						X			X		X		7.5.5
Onsite AC Power				X									8.3.1
Supporting Interface Areas													
Flood Protection	X		X						X		X	X	3.4
Missile Protection [1]									X		X	X	3.5
Pipe Whip Protection	X	X											3.6
Mechanical Systems and Components	X	X	X		X	X	X	X	X	X	X	X	3.9
Seismic and Dynamic Qualification of Mechanical and Electrical Equipment	X	X				X	X	X	X	X	X	X	3.10
Environmental Design of Mechanical and Electrical Equip.	X	X				X	X	X	X	X	X	X	3.11
Inservice Inspection of Class 2 and 3 Components	X	X	X										6.6
Fire Protection [2]									X		X	X	9.5.1

[1] Protection against turbine missiles is included as described in Section 3.5.

[2] IC/PCCS pool and spent fuel pool makeup via permanent FAPCS piping connected directly to the site Fire Protection System is included as described in Subsection 9.1.3.

Table 1.8-2

Matrix of BOP Interfaces

Interface Areas	Items on Matching Portion of Plant												
	Switchyard	(Nonsafety-related) Heat Sinks and Water Supplies	Intake Structure	Inservice Inspection Program	Initial Test Program	10 CFR 50 App. I Program	Meteorology	Seismic Design Parameters	Wind and Tornado Parameters	Geology	Probable Maximum Flood	Other (specify)	Location(s) where discussed
Interface Areas for Structures, Systems and Components (nonsafety-related portions)													
Plant Service Water System		X			X								9.2.1
Reactor Component Cooling Water System		X			X								9.2.2
Makeup Water System		X											9.2.3
Condensate Storage and Transfer System		X			X								9.2.6
Chilled Water System		X			X								9.2.7
Turbine Component Cooling Water System		X			X								9.2.8
Circulating Water System		X	X		X								10.4.5
Nonsafety-Related DCIS	X				X								7.1.4, 7.1.5
Fire Protection Program					X								9.5.1
Onsite AC Power System	X				X								8.3.1
Compressed Air Systems					X								9.3.1
Process Sampling System					X								9.3.2
Equipment and Floor Drain Systems					X								9.3.3
Instrument Air System					X								9.3.6
Service Air System					X								9.3.7

Table 1.8-2

Matrix of BOP Interfaces

Interface Areas	Items on Matching Portion of Plant												
	Switchyard	(Nonsafety-related) Heat Sinks and Water Supplies	Intake Structure	Inservice Inspection Program	Initial Test Program	10 CFR 50 App. I Program	Meteorology	Seismic Design Parameters	Wind and Tornado Parameters	Geology	Probable Maximum Flood	Other (specify)	Location(s) where discussed
High Pressure Nitrogen Supply System					X								9.3.8
Heating, Ventilation, and Air Conditioning Systems					X								9.4
Liquid Waste Management System		X		X	X	X							11.2
Offgas System				X	X	X							11.3.2
Solid Waste Management System						X							11.4
Effluent Monitoring and Sampling					X	X	X						11.5
Main Condenser		X	X										10.4.1
Main Condenser Evacuation System					X	X							10.4.2
Process Radiation Monitoring System					X	X							11.5
Feedwater Control System					X								7.7.3
Steam Bypass and Pressure Control System					X								7.7.5
Area Radiation Monitoring System					X								7.5.4
Turbine Bypass System					X								10.4.4
Station Water System			X										9.2.10

1.9 CONFORMANCE WITH STANDARD REVIEW PLAN AND APPLICABILITY OF CODES AND STANDARDS

1.9.1 Conformance with Standard Review Plan

This subsection provides the information required by 10 CFR 52.47(a)(9) showing conformance with the Standard Review Plan (SRP). The summary of differences from requirements in each SRP section is presented on a section by section basis in Tables 1.9-1 through 1.9-19. If no difference is indicated, the ESBWR design does not deviate from the requirements in the SRP section. For SRP sections where there are deviations, a reference location is provided for additional information.

1.9.2 Applicability to Regulatory Criteria

Standard Review Plans, Branch Technical Positions, Regulatory Guides and Industrial Codes and Standards, which are applicable to the ESBWR design, are provided in Tables 1.9-20, 1.9-21 and 1.9-22. Applicable revisions are also shown. The applicability column of Tables 1.9-20 and 1.9-21 refers to whether or not the requirement is applicable during Design Certification of the ESBWR. Standard Review Plans, Branch Technical Positions, and Regulatory Guides that apply only during detailed design, construction, fabrication and erection are indicated by a dash in the applicability column and a comment.

In order to simplify the licensing process for future COL applicants, the ESBWR incorporates ASME Code Case N-782 (Reference 1.9-3) by reference. This Code Case endorses the use of the Edition and Addenda of ASME Boiler and Pressure Vessel Code Section III, Division 1, that was applied during Design Certification as an alternative to the requirements of Code paragraphs NCA-1140(a)(2)(a) and NCA-1140(a)(2)(b). Reference 1.9-4 provides additional justification for application of this Code Case to the ESBWR.

1.9.3 Applicability of Experience Information

Table 1.9-23 lists NUREGs that have been included as references in the ESBWR DCD. Appendix 1C addresses applicability of US NRC Generic Letters and Bulletins.

1.9.4 COL Information

1.9-1-A SRP Deviations (deleted)

1.9-2-A Experience Information (deleted)

1.9-3-A SRP and Regulatory Guide Applicability

COL applicant will address the applicability of SRPs and Regulatory Guides that refer to "BSP" or "COL" in the Comments column. (Tables 1.9-20 and 1.9-21)

1.9.5 References

1.9-1 Electric Power Research Institute, “Advanced Light Water Reactor Utility Requirements Document,” Revision 6, May 1997.

1.9-2 GE Nuclear Energy; “GE Nuclear Energy Quality Assurance Program Description,” NEDO-11209-04a, Class I (non-proprietary), Revision 8, March 31, 1989.

1.9-3 American Society of Mechanical Engineers, "Use of Code Editions, Addenda and Cases – Section III, Division 1," Case N-782, Approved January 30, 2009.

1.9-4 Letter, Richard E. Kingston (GEH) to USNRC, "Request for Addition of ASME Boiler and Pressure Vessel Code Case N-782 to ESBWR DCD," MFN 10-081, March 12, 2010.

Table 1.9-1

Summary of Differences from SRP Section 1

SRP Section	Specific SRP Acceptance Criteria	Summary Description of Difference	Subsection Where Discussed
1.8		None	

Notes for Tables 1.9-1 through 1.9-19:

(1) None in column 3 means the ESBWR design does not deviate from the requirements in the indicated SRP Section.

Table 1.9-2

Summary of Differences from SRP Section 2

SRP Section	Specific SRP Acceptance Criteria	Summary Description of Difference	Subsection Where Discussed
2.1.1-2.5.3	See Table 2.0-1.	Limits are imposed on selected SRP Section II acceptance criteria by (1) the envelope of the ESBWR Standard Plant site parameters and (2) evaluation assumptions.	2.0
2.5.4	Subsection 2.5.4.9. In meeting the requirements of References 3, 6 and 7, the earthquake design basis analysis is acceptable if a brief summary of the safe shutdown and operating basis earthquakes (SSE and OBE) is presented and references are included to Subsections 2.5.2.6 and 2.5.2.7.	The ESBWR is based on a single earthquake (SSE) design.	3.7
2.5.5	The secondary source of emergency cooling water should survive the operating basis earthquake (OBE) and design basis flood.	The ESBWR is based on a single earthquake (SSE) design.	3.7

Table 1.9-3

Summary of Differences from SRP Section 3

SRP Section	Specific SRP Acceptance Criteria	Summary Description of Difference	Section/Subsection Where Discussed
3.2.1		None	
3.2.2		None	
3.3.1		None	
3.3.2		None	
3.4.1		None	
3.4.2		None	
3.5.1		None	
3.5.2		None	
3.5.3		None	
3.6.1 and 3.6.2		None	
3.7.1	II.4-Review considerations for DC and COL applications	Supplemented by "Interim Staff Guidance on Seismic Issues Associated with High Frequency Ground Motion in Design Certification and Combined License Applications," COL/DC-ISG-1, May 2008.	Table 2.0-2
3.7.1 and 3.7.3	II- Two earthquakes, the SSE and the OBE shall be considered in the design.	The ESBWR is based on a single earthquake (SSE) design.	3.7.1 and 3.7.3
3.7.2		None	
3.7.3	II.9—For multiply supported equipment use envelope response spectra and;	Independent Support Motion Response Spectrum methods acceptable for use.	3.7.3.9
3.7.3	Combine responses from inertia effects with anchor displacements by absolute sum.	Combine responses from inertia effects with anchor displacements by the square root of the sum of the squares method.	3.7.3.9

Table 1.9-3

Summary of Differences from SRP Section 3

SRP Section	Specific SRP Acceptance Criteria	Summary Description of Difference	Section/Subsection Where Discussed
3.7.3	II.2 – Determination of number of OBE cycles	The ESBWR is based on a single earthquake (Safe Shutdown Earthquake-SSE) design, two SSE events with 10 peak stress cycles per event are used.	3.7.3.2
3.7.4		None	
3.8.1		None	
3.8.2		None	
3.8.3		None	
3.8.4		None	
3.8.5		None	
3.9.1		None	
3.9.2		None	
3.9.3		None	
3.9.4		None	
3.9.5		None	
3.9.6		None	
3.10		None	
3.11		None	

Table 1.9-4

Summary of Differences from SRP Section 4

SRP Section	Specific SRP Acceptance Criteria	Summary Description of Difference	Subsection Where Discussed
4.2		None	
4.3		None	
4.4	II.3.b – NEDO-31960 as basis for stability methodology.	Stability methodology based on TRACG ESBWR Stability LTR, NEDE-33083, Supplement 1.	4.4
4.5.1		None	
4.5.2		None	
4.6		None	

Table 1.9-5

Summary of Differences from SRP Section 5

SRP Section	Specific SRP Acceptance Criteria	Summary Description of Difference	Subsection Where Discussed
5.2.1.1		None	
5.2.1.2		None	
5.2.2		None	
5.2.3	II.3.b.(3)—Reg Guide 1.71, Welding Qualification for Areas of Limited Accessibility.	Alternate position employed.	5.2.3.4.2
5.2.4	II.1—Inspection of Class 1 pressure-containing components.	Some welds inaccessible for volumetric examination.	5.2.4.1
5.2.5		None	
5.3.1		None	
5.3.2		None	
5.3.3		None	
5.4.1.1		Not applicable to the ESBWR	
5.4.2.1		Not applicable to the ESBWR	
5.4.2.2		Not applicable to the ESBWR	
5.4.6	II.1, II.4, II.5, II.6, II.7a, b, c & f, II.8, II.9 and II.10	As applicable to a passive-design isolation condenser system (ICS) in place of an active-design reactor core isolation cooling (RCIC) system.	5.4.6
	II.2	Requires CRD System and ICS; or, ADS and GDCS	3.1.4.4, 5.4.6
	II.3 and II.7d & e	Not applicable to ESBWR	

SRP Section	Specific SRP Acceptance Criteria	Summary Description of Difference	Subsection Where Discussed
5.4.7	Except of RCPB portions for structural integrity, none of the criteria apply.	No safety-related RHR system, the ESBWR uses a nonsafety-related RWCU/SDC system	
5.4.8		None	
5.4.11		Not applicable to the ESBWR	
5.4.12		None	

Table 1.9-6

Summary of Differences from SRP Section 6

SRP Section	Specific SRP Acceptance Criteria	Summary Description of Difference	Subsection Where Discussed
6.1.1		None	
6.1.2		None	
6.2.1	Listed in acceptance criteria of 6.2.1.1.C, 6.2.1.2, 6.2.1.3 and 6.2.1.4	Not applicable	
6.2.1.1C	Design provision for automatic actuation of wetwell spray 10 minutes following a LOCA signal	The ESBWR does not need wetwell sprays	6.2.1.1
6.2.1.1C	Monthly vacuum valve operability test	Operability tests only performed during refueling outages	6.2.1.1
6.2.1.2		None	
6.2.1.3	Sources of energy during LOCA	All sources considered, but ESBWR analysis uses different correlations than stated in 10 CFR 50, Appendix K, for decay heat and metal-water reaction rate.	
6.2.1.4		Not applicable to the ESBWR	
6.2.1.5		PWR requirements have been considered for ESBWR as described in Appendix 6C.	Appendix 6C

Table 1.9-6

Summary of Differences from SRP Section 6

SRP Section	Specific SRP Acceptance Criteria	Summary Description of Difference	Subsection Where Discussed
6.2.2	Containment heat removal systems should meet the redundancy and power source requirements for an engineered safety feature, i.e., system should be designed to accommodate a single active failure.	Passive Containment Cooling System is a passive system with no credible failure mode. Therefore single active failure is not applicable. Power is not required for system operation.	
6.2.3		None.	
6.2.4	II.4 – One isolation valve inside and one isolation valve outside containment	ESBWR design meets GDC 55 and GDC 56 using the following alternate configurations: (1) FAPCS suppression pool suction line contains two isolation valves outside containment in each of two branch lines; (2) FAPCS Reactor Well drain line has two isolation valves inside containment; (3) ICS piping contains two isolation valves inside containment; and (4) Containment Inerting System piping contains two isolation valves outside containment.	6.2.4.3 6.2.4.3 Tables 6.2-23 to 6.2-30 Tables 6.2-36 to 6.2-38
6.2.4	II.6.n – Purge and vent valve closure times on the order of ≤ 5 seconds may be necessary	Purge and vent valves for ICS close in ≤ 30 seconds (estimated value to be confirmed during detailed design).	6.2.4.3 plus Tables 6.2-24, 6.2-26, 6.2-28 and 6.2-30

Table 1.9-6

Summary of Differences from SRP Section 6

SRP Section	Specific SRP Acceptance Criteria	Summary Description of Difference	Subsection Where Discussed
6.2.5	II.4, 5, 6, 7, 8,14	Not Applicable. ESBWR containment is inerted to limit oxygen concentration. Flammability control system is not required per 10 CFR 50.44	6.2.5
6.2.6		None	
6.2.7		None	
6.3	The requirements of Task Action Plan Item II.K.3.15 of NUREG-0737 and NUREG-0718, which involves isolation of HPCI and RCIC for BWR plants, must also be satisfied.	Not applicable to the ESBWR. There are no RCIC or HPCI systems in the ESBWR design.	
6.4	II.3 – Pressurization Systems	For differential pressure testing of the control room, the periodic verification interval of every 18 months in criteria II.3.a through II.3.c is increased to every 24 months to accommodate the ESBWR's 2-year operating cycle.	6.4.7, Chapter 16 TS Subsection 5.5.12.d
6.5.1		None	
6.5.2		Not applicable to the ESBWR	
6.5.3		None	
6.5.4		Not applicable to the ESBWR	
6.5.5		Not applicable to the ESBWR. Guidance provided is specific to Mark I, II and III containments and cannot be applied to the ESBWR containment design.	
6.6		None	
6.7		Not applicable to the ESBWR	

Table 1.9-7

Summary of Differences from SRP Section 7

SRP Section	Specific SRP Acceptance Criteria	Summary Description of Difference	Subsection Where Discussed
7.0		(See below for App. 7.0-A)	
App. 7.0-A	Review Process for Digital Instrumentation and Control Systems, Version 11.0, June 24, 1997 Section A: Software development process characteristics: BTP HICB-14, Section 3.1: "All planning documents should be evaluated for the following process characteristics: consistency, style, traceability, unambiguity and verifiability. Each plan should be internally consistent, and the complete set of plans should be mutually consistent." "It should be possible to verify that the plans have been followed during the software project."	The approach to Software Management and QA complies with the intent of the SRP and BTP HICB-14 but is implemented in a set of acceptable equivalent alternative and mutually consistent plans, which applied in total, comprise the general requirements.	Appendix 7B provides information about Software Quality Program for Design and Development of Hardware and Software
7.1 to 7.9	10 CFR 50.55a(h)	IEEE 279, which is referenced in the SRP when referring to 10 CFR 50.55a(h), has been superseded by IEEE 603 in 10 CFR 50.55a(h).	Numerous locations throughout Chapter 7

Table 1.9-7

Summary of Differences from SRP Section 7

SRP Section	Specific SRP Acceptance Criteria	Summary Description of Difference	Subsection Where Discussed
7.1, 7.5, 7.9	Staff Requirements Memorandum to SECY 93-087 Item II.T	Requirements for Class 1E equipment and circuits are not applicable to the ESBWR.	7.1.6.3
7.1	Regulatory Guide 1.22	Some actuators and digital sensors, because of their locations, cannot be fully tested during actual reactor operation.	7.1.6.4
7.1, 7.3	Regulatory Guide 1.75	None	
7.1, 7.2, 7.3	Regulatory Guide 1.118	Clarifications and testing exceptions are presented.	7.3.1.1.3.4
7.2, 7.3	BTP HICB-3	The ESBWR has no coolant pump and the BTP Position B.1 does not apply to ESBWR.	7.1.6.5
7.3	BTP HICB-6	The ESBWR has no recirculation pump and has no active ECCS pumps. Therefore, this BTP is not applicable.	7.1.6.5
7.3	BTP HICB-8	DPVs, SRVs and squib valves cannot be tested during reactor operation.	7.3.1.1.3.5, 7.3.1.2.3.5
7.2, 7.3, 7.4	BTP HICB-13	Not applicable to the ESBWR design.	7.1.6.5
7.4	Regulatory Guide 1.53	None	
7.6	10 CFR 50.34(f)(2)(v) TMI Action Item I.D.3	The HP/LP interlock does not have a bypass feature.	7.6.1.3.1
7.6	GDC 25	The HP/LP interlocks do not involve reactivity control. Thus, GDC 25 is not applicable.	7.6.1.3.2
7.7, 7.9	Regulatory Guide 1.151	Not applicable to N-DCIS and SB&PC	7.1.5.3.4, 7.7.5.3.3
App. 7.1-B		Not applicable to a DCD	
App. 7.1-C		Editorial, no specific action is involved.	

Table 1.9-8

Summary of Differences from SRP Section 8

SRP Section	Specific SRP Acceptance Criteria	Summary Description of Difference	Subsection Where Discussed
8.1, 8.3.1, 8.3.2	GDC 2	None	
8.1, 8.3.1, 8.3.2	GDC 4	None	
8.1, 8.2, 8.3.1, 8.3.2	GDC 5	The ESBWR is a single-unit plant. Therefore, this GDC is not applicable	8.1.5.2.4, Table 8.1-1, 8.2.2.2
8.1, 8.2, 8.3.2	GDC 17	None	
8.3.1	GDC 17	The ESBWR does not need or have safety-related standby AC power sources.	8.1.5.2.4, Table 8.1-1, 8.2.2.2, 8.3.1.2.1
8.1, 8.2, 8.3.1, 8.3.2	GDC 18	None	
8.2, 8.3.2	GDCs 33, 34, 35, 38, 41 and 44	None. Met by providing a design that complies with GDC 17.	
8.3.1	GDCs 33, 34, 35, 38, 41 and 44	The ESBWR does not need or have safety-related standby AC power sources.	8.1.5.2.4, Table 8.1-1, 8.2.2.2, 8.3.1.2.1
8.1, 8.3.1, 8.3.2	GDC 50	None	
8.1, 8.3.1, 8.3.2	RG 1.6	The ESBWR does not need or have safety-related standby AC power sources.	8.1.5.2.4, 8.3.2
8.1, 8.3.1	RG 1.9	The ESBWR diesel-generator units are not safety related, nor is AC power needed to achieve safe shutdown. Therefore, this RG is not applicable.	8.1.5.2.4, Table 8.1-1

Table 1.9-8

Summary of Differences from SRP Section 8

SRP Section	Specific SRP Acceptance Criteria	Summary Description of Difference	Subsection Where Discussed
8.1, 8.2, 8.3.1, 8.3.2	RG 1.32	Safety-related DC power sources are provided to support passive core cooling and containment integrity safety functions. No offsite or diesel-generator-derived AC power is required for 72 hours.	8.3.2, 8.1.5.2.4, Table 8.1-1
8.1, 8.3.1, 8.3.2	RG 1.47	None	
8.1, 8.3.1, 8.3.2	RG 1.53	None	
8.1, 8.3.1, 8.3.2	RG 1.63	None	
8.1, 8.3.1, 8.3.2	RG 1.75	None	
8.1, 8.3.1, 8.3.2	RG 1.81	The ESBWR Standard Plant is designed as a single-unit plant. Therefore this RG is not applicable. (Same as GDC 5)	8.1.5.2.4, Table 8.1-1
8.1, 8.3.1, 8.3.2	RG 1.106	The ESBWR does not require 480 VAC electric motors or motor operated valves to perform any safety-related function, therefore, this regulatory guide is not applicable.	8.1.5.2.4, Table 8.1-1
8.1, 8.3.1, 8.3.2	RG 1.118	None	
8.1, 8.3.2	RG 1.128	None	
8.1, 8.3.2	RG 1.129	None	
8.1, 8.3.1, 8.3.2	RG 1.153	None	
8.1, 8.2, 8.3.1, 8.3.2	RG 1.155	The ESBWR does not require AC power to achieve safe shutdown. Thus ESBWR meets the intent of RG 1.155.	15.5.5

Table 1.9-8

Summary of Differences from SRP Section 8

SRP Section	Specific SRP Acceptance Criteria	Summary Description of Difference	Subsection Where Discussed
8.1, 8.3.1	RG 1.160	Maintenance Rule development is addressed in Chapter 17 and Subsection 13.5.2 for Operating and Maintenance Procedures.	8.1.5.2.4, 13.5.2, 17.4.9
8.1, 8.2, 8.3.1, 8.3.2	10 CFR 50.63	None	
8.1, 8.3.1	BTP ICSB 4	Not BWR applicable (PWR)	N/A
8.1, 8.3.1	BTP ICSB 8	The ESBWR can achieve safe shutdown without AC power, and the diesel-generator sets are not safety-related. Therefore this criterion is not applicable.	N/A
8.1, 8.2	BTP ICSB 11	See Subsection 8.2.2.1 for the analysis of the reliability and stability of the offsite transmission systems.	8.2.4, 8.1.5.2.4, 8.2.2.1
8.1, 8.3.1	BTP ICSB 18	There are no safety-related, manually controlled, electrically operated valves in the ESBWR design. All safety-related valves are automatic and require no manual action for 72 hours. This BTP is not applicable to the ESBWR design.	8.1.5.2.4
8.1, 8.3.1, 8.3.2	BTP ICSB 21	None	
8.1, 8.2	BTP PSB 1	Degraded voltage in the offsite power system does not affect the safety-related systems, as the 480 VAC Isolation Power Centers do have degraded voltage protection.	8.1.5.2.4, 8.3.1.1.2
8.1, 8.3.1	BTP PSB 2	This BTP does not apply because the diesel-generator sets do not serve a safety-related function.	8.1.5.2.4

Table 1.9-8

Summary of Differences from SRP Section 8

SRP Section	Specific SRP Acceptance Criteria	Summary Description of Difference	Subsection Where Discussed
8.1, 8.3.1	NUREG/CR-0660	Not applicable, the ESBWR does not use safety-related diesels to achieve safe shutdown. However, defense-in-depth principles such as redundancy and diversity are incorporated in the design and integration of ESBWR systems.	8.1.5.2.4
8.1, 8.3.1, 8.3.2	NUREG-0718, Revision 1	Not applicable to the ESBWR. NUREG-0718 only applies to the pending applications as of February 16, 1982.	Table 8.1-1
8.1, 8.3.1	NUREG-0737, TMI Action Item II.E.3.1, Emergency Power Supply for Pressurizer Heater	This item is applicable only to PWRs and does not apply to the ESBWR.	N/A
8.1, 8.3.1	NUREG-0737, TMI Action Item II.G.1, Emergency Power for Pressurizer Equipment	This item is applicable only to PWRs and does not apply to the ESBWR.	N/A

Table 1.9-9

Summary of Differences from SRP Section 9

SRP Section	Specific SRP Acceptance Criteria	Summary Description of Difference	Subsection Where Discussed
9.1.1		None	
9.1.2		None	
9.1.3	II.1.a – Acceptance criterion for designing cooling and makeup system to Quality Group C	Deviation to this criterion is made from Quality Group C to D for design of RTNSS-classified fire protection system components used to provide makeup water to IC/PCCS and fuel pools after 72 hours.	9.5.1
9.1.3	II.1.c – Acceptance criteria for meeting GDC 5.	ESBWR is designed for single unit plant.	
9.1.3	II.1.d, e, f, g and h – Acceptance criteria for meeting GDCs 44, 45, 46, 61 and 63 by the FAPCS safety-related function and components.	ESBWR FAPCS provides nonsafety-related cooling and cleaning functions. Although the FAPCS is not required to meet the requirements of GDCs 44, 45, 46, 61 and 63, it meets the intent of these GDCs.	9.1.3
9.1.4		None	
9.1.5		None	
9.2.1	II.4, II.5, II.6 – Acceptance criteria for meeting GDCs 44, 45, and 46.	PSWS is nonsafety-related and meets the intent of GDCs 44, 45, and 46. The requirements within these GDCs that apply to safety-related systems do not apply to PSWS.	9.2.1

Table 1.9-9

Summary of Differences from SRP Section 9

SRP Section	Specific SRP Acceptance Criteria	Summary Description of Difference	Subsection Where Discussed
9.2.2	II.4, II.5, II.6 – Acceptance criteria for meeting GDCs 44, 45, and 46.	RCCWS and CWS are nonsafety-related. The ESBWR does not have reactor coolant pumps. RCCWS and CWS meet the intent of GDCs 44, 45, and 46. The requirements within these GDCs that apply to safety-related systems do not apply to RCCWS or CWS.	9.2.2, 9.2.7
9.2.3		None	
9.2.4	II.1, II.2	See Subsection 9.2.4 for conceptual design requirements requirements of Potable and Sanitary Water Systems.	9.2.4, 1.8.2.5
9.2.5	II.1 (Reg Guide 1.27 C-1), II.3.d (Reg Guide 1.27) II.3.d (Reg Guide 1.72)	Requirement to provide 30-day water makeup capability during accident as applied to passive plants. An offsite external water source after seven days is acceptable.	9.2.5
9.2.6	II.1.c	Not Applicable, Condensate Storage Facility is nonsafety-related	
9.3.1		See Subsections 9.3.6 (IAS), 9.3.7 (SAS), 9.3.8 (HPNSS) and 6.2.5.2 (CIS).	9.3.6, 9.3.7, 9.3.8 and 6.2.5.2
9.3.2		Post Accident Sampling System (PASS) is not included in the ESBWR design in accordance with NEDO-32991-A.	See Table 1.6-1 for details on NEDO-32991-A
9.3.3		None	
9.3.4		Not applicable to the ESBWR	
9.3.5		None	
9.4.1		None	
9.4.2		None	

Table 1.9-9

Summary of Differences from SRP Section 9

SRP Section	Specific SRP Acceptance Criteria	Summary Description of Difference	Subsection Where Discussed
9.4.3		None	
9.4.4		None	
9.4.5		None	
9.5.1	Section C.8.1.2.c of BTP SPLB 9.5-1 recommends that automatic suppression capability should be provided in the Control Room Complex as described in Regulatory Guide 1.189. Section 6.1.2 of Regulatory Guide 1.189 states in part: "Peripheral rooms in the control room complex should have automatic water suppression …"	ESBWR design does not include a sprinkler system in the Control Building offices around the Main Control Room.	9.5.1.12.1.2

Table 1.9-9

Summary of Differences from SRP Section 9

SRP Section	Specific SRP Acceptance Criteria	Summary Description of Difference	Subsection Where Discussed
9.5.1	Section C.8.1.2.c of BTP SPLB 9.5-1 recommends cable raceways under raised floors should be reviewed to determine if adequate fire detection and suppression are provided for potential fires in these areas. Section 6.1.2.1 of Regulatory Guide 1.189 states in part: "...Fully enclosed electrical raceways located in under-floor and ceiling spaces, if over 0.09 m^2 (1 sq ft) in cross-sectional area, should have automatic fire suppression inside."	ESBWR design does not include any fixed fire suppression system in the under-floor area	9.5.1.12.1.3
9.5.1	Section C.7.1.4 of BTP SPLB 9.5-1 recommends that electrical cabinets should be protected as described in Regulatory Guide 1.189. Section 6.1.2.2 of Regulatory Guide 1.189 states in part: "Smoke detectors should be provided in the control room, cabinets, and consoles."	ESBWR design does not include any smoke detectors within cabinets or consoles.	9.5.1.12.1.1

Table 1.9-9

Summary of Differences from SRP Section 9

SRP Section	Specific SRP Acceptance Criteria	Summary Description of Difference	Subsection Where Discussed
9.5.1	Section C.8.1.4 of BTP SPLB 9.5-1 recommends protecting computer rooms with fire protection systems as described in Regulatory Guide 1.189. Section 6.1.4 of Regulatory Guide 1.189 states in part: "Computer rooms for computers performing functions important to safety that are not part of the control room complex should be separated from other areas of the plant by barriers having a minimum fire resistance rating of 3 hours and should be protected by automatic detection and fixed automatic suppression."	ESBWR design does not include any fixed fire suppression systems for safety-related computer rooms	9.5.1.12.1.7

Table 1.9-9

Summary of Differences from SRP Section 9

SRP Section	Specific SRP Acceptance Criteria	Summary Description of Difference	Subsection Where Discussed
9.5.1	Section C.8.1.8.b of BTP SPLB 9.5-1 recommends that diesel day tanks comply with Regulatory Guide 1.189. Section 6.1.8 of Regulatory Guide 1.189 states in part: "Day tanks with total capacity up to 4164 L (1100 gallons) may be located in the diesel generator area under the following conditions: a. The day tank is located in a separate enclosure with fire resistance rating of at least 3 hours."	ESBWR design includes day tanks with a larger capacity than 4164 L (1100 gallons).	9.5.1.12.1.4, 9.5.1.12.1.5

Table 1.9-9

Summary of Differences from SRP Section 9

SRP Section	Specific SRP Acceptance Criteria	Summary Description of Difference	Subsection Where Discussed
9.5.1	Section C.8.1.8.c of BTP SPLB 9.5-1 recommends that impacts of suppression systems on operating generators should be addressed in the fire hazard analysis. Section 6.1.8 of Regulatory Guide 1.189 states in part: "Automatic fire suppression should be installed to suppress or control any diesel generator or lubricating oil fires. Such systems should be designed for operation when the diesel is running without affecting the diesel."	ESBWR design does not place restrictions on sprinkler head position or direction in diesel generator rooms.	9.5.1.12.1.6
9.5.1	Section 6.4.1 of BTP SPLB 9.5-1 recommends standpipe and hose stations meet the provisions of Regulatory Guide 1.189, which restricts maximum hose length to 30.5 m (100 ft).	Standpipes and hose stations external to containment and portable extinguishers provide protection during refueling and maintenance operations. The 30.5 m (100 ft) hose coverage requirement cannot be met in containment for all areas with standpipes located outside containment.	9.5.1.12.1.8, 9A.6.5.8
9.5.2		None	
9.5.3		None	

Table 1.9-9

Summary of Differences from SRP Section 9

SRP Section	Specific SRP Acceptance Criteria	Summary Description of Difference	Subsection Where Discussed
9.5.4	All	Not Applicable. See Table 1.9-20. The Standard ESBWR DG and auxiliary systems are not safety-related and have no safety design basis.	9.5.4.1
9.5.5	All	Not Applicable. See Table 1.9-20.	9.5.5.1
9.5.6	All	Not Applicable. See Table 1.9-20.	9.5.6.1
9.5.7	All	Not Applicable. See Table 1.9-20.	9.5.7.1
9.5.8	All	Not Applicable. See Table 1.9-20.	9.5.8.1

Table 1.9-10

Summary of Differences from SRP Section 10

SRP Section	Specific SRP Acceptance Criteria	Summary Description of Difference	Subsection Where Discussed
10.2	5.b – Frequency for surveillance testing of main steam stop and control valves	In accordance with NRC accepted programs at operating plants, the main steam stop and control valves will be tested quarterly instead of once per month.	
10.2	10 CFR Part 50, Appendix A, GDC 4	None	
10.2	RG 1.68	None	
10.2	BTP ASB 3-1	ESBWR applies BTP SPLB 3-1, which has replaced BTP ASB 3-1.	Table 1.9-20
10.2	BTP MEB 3-1	ESBWR applies BTP 3-4, which has replaced BTP MEB 3-1.	Table 1.9-20
10.2	Paragraph III.2.c	ESBWR uses an alternate overspeed detection and trip system and does not incorporate a mechanical over speed trip device.	10.2.2.4
10.2.3	II.4.a – Turbine design overspeed	Design overspeed is less than 5% above the highest anticipated speed from a loss of load	10.2.3
10.3	10 CFR Part 50, Appendix A, GDC 2	None	
10.3	10 CFR 50, Appendix A, GDC 4	None	
10.3	10 CFR 50, Appendix A, GDC 5	The ESBWR is a single-unit plant. Therefore this Code is not applicable.	N/A
10.3	10 CFR 50, Appendix A, GDC 34	GDC 34 pertains to PWR plants. This is not applicable to the ESBWR design.	N/A
10.3	RG 1.26	None	

Table 1.9-10

Summary of Differences from SRP Section 10

SRP Section	Specific SRP Acceptance Criteria	Summary Description of Difference	Subsection Where Discussed
10.3	RG 1.29	Applies except for Main Steam Piping from seismic interface restraint to turbine stop valves as identified in Table 3.2-1 and Figure 3.2-1.	Tables 1.9-21a, 1.9-21b, 3.2-1 and 17.0-1, Figure 3.2-1
10.3	RG 1.115	None	
10.3	RG 1.117	None	
10.3	BTP ASB 3-1	ESBWR applies BTP SPLB 3-1, which has replaced BTP ASB 3-1.	Table 1.9-20
10.3	BTP RSB 3-1	ESBWR applies Appendix A of SRP 3.2.2, which has replaced BTP RSB 3-1.	Table 1.9-20
10.3	BTP RSB 3-2	ESBWR applies Appendix B of SRP 3.2.2, which has replaced BTP RSB 3-2.	Table 1.9-20
10.3	BTP RSB 5-1	None	
10.3	NUREG 0138	PWR only, not applicable to ESBWR	
10.3.6	10 CFR 50, Appendix A, GDC 1	None	
10.3.6	ASME B&PV Code, Sect. III, subsection NB, NC, & ND & Appendix I, Sect. II, Parts A, B, & C: & Sect. IX; ASME	None	
10.3.6	SRP Sect. 5.4.2.1	This is applicable only to PWR plants with Steam Generators, not the ESBWR Plant.	N/A
10.3.6	SRP Sect. 5.2.3	None	
10.3.6	RG 1.85	ESBWR applies RG 1.84, which has replaced RG 1.85.	Table 1.9-21
10.3.6	RG 1.71	None	

Table 1.9-10

Summary of Differences from SRP Section 10

SRP Section	Specific SRP Acceptance Criteria	Summary Description of Difference	Subsection Where Discussed
10.3.6	RG 1.37	Applies except for NRC accepted alternate positions as documented in Table 2-1 of Reference 1.9-2.	Tables 1.9-21b and 17.0-1.
10.3.6	ANSI Standard N 45.2.1-1973	See above SRP 10.3.6 listing for RG 1.37.	
10.3.6	10 CFR 50, 50.55a, "Codes & Standards"	None	
10.3.6	10 CFR 50, Appendix A, General Design Criteria 35, "Emergency Core Cooling."	None	
10.3.6	10 CFR 50, Appendix B, Quality Assurance Criteria for Nuclear Power Plants and Fuel Reprocessing Plants."	None	
10.4.1	10 CFR 50, Appendix A, GDC 60, "Control of Releases of Radioactive Materials to the Environment."	None	
10.4.1	RG 1.68	None	
10.4.2	10 CFR 50, Appendix A, GDC 60, and GDC 64, "Monitoring Radioactive Releases."	None	
10.4.2	"Standards for Steam Surface Condensers," 6th Ed., Heat Exchanger Institute (1970).	ESBWR design is based on the 10th Ed. (2006)	HEI Standards section of Table 1.9-22
10.4.2	RG 1.26	None	
10.4.2	RG 1.33	Not applicable to GEH QA Program.	Tables 1.9-21b and 17.0-1

Table 1.9-10

Summary of Differences from SRP Section 10

SRP Section	Specific SRP Acceptance Criteria	Summary Description of Difference	Subsection Where Discussed
10.4.2	RG 1.123	ESBWR applies RG 1.28, which has replaced RG 1.123.	Tables 1.9-21, 1.9-21b and 17.0-1
10.4.3	10 CFR 50, Appendix A, GDC 60 and GDC 64.	None	
10.4.3	RG 1.26	None	
10.4.3	RG 1.33	Not applicable to GEH QA Program.	Tables 1.9-21b and 17.0-1
10.4.3	RG 1.123	ESBWR applies RG 1.28, which has replaced RG 1.123.	Tables 1.9-21, 1.9-21b and 17.0-1
10.4.4	10 CFR 50, Appendix A, GDC 4	None	
10.4.4	10 CFR 50, Appendix A, GDC 34, "Residual Heat Removal"	None	
10.4.4	RG 1.68	None	
10.4.4	BTP ASB 3-1	ESBWR applies BTP SPLB 3-1, which has replaced BTP ASB 3-1.	Table 1.9-20
10.4.4	BTP MEB 3-1	ESBWR applies BTP 3-4, which has replaced BTP MEB 3-1.	Table 1.9-20
10.4.5	10 CFR 50, GDC 4	None	
10.4.6	10 CFR 50, Appendix A, GDC 14	None	
10.4.6	RG 1.56	None	
10.4.6	BTP ASB 3-1	ESBWR applies BTP SPLB 3-1, which has replaced BTP ASB 3-1.	Table 1.9-20
10.4.6	BTP MTEB 5-3	This is a PWR requirement, not applicable to the ESBWR design.	N/A
10.4.7	10 CFR 50, App A, GDC 2	None	

Table 1.9-10

Summary of Differences from SRP Section 10

SRP Section	Specific SRP Acceptance Criteria	Summary Description of Difference	Subsection Where Discussed
10.4.7	10 CFR 50, App A, GDC 4	None	
10.4.7	10 CFR 50, App A, GDC 5	The ESBWR Standard Design is a single unit plant and therefore does not share Structures, Systems, and Components.	N/A
10.4.7	10 CFR 50, App A, GDC 44	None	
10.4.7	10 CFR 50, App A, GDC 45	None	
10.4.7	10 CFR 50, App A, GDC 46	None	
10.4.7	RG 1.29	Applies except for Main Steam Piping from seismic interface restraint to turbine stop valves as identified in Table 3.2-1 and Figure 3.2-1.	Tables 1.9-21a, 1.9-21b, 3.2-1 and 17.0-1, Figure 3.2-1
10.4.7	BTP ASB 10-2	This is a PWR requirement, not applicable to the ESBWR design.	N/A
10.4.8 (PWR)	N/A	This SRP is only applicable to PWR plants.	N/A
10.4.9 (PWR)	N/A	This SRP is only applicable to PWR plants.	N/A

Table 1.9-11

Summary of Differences from SRP Section 11

SRP Section	Specific SRP Acceptance Criteria	Summary Description of Difference	Subsection Where Discussed
11.1	II.9—BWR GALE Code	Alternate computer code.	
11.2		None	
11.3	II.A.7—Potential Releases	1) Activity from charcoal tanks not included in final release tabulations 2) Total Flow is evaluated for 1 hour, not 2 hours	11.3.7.1
11.4	On site storage facility	Not within scope of design certification. (On site storage facility is a separate building from Radwaste Building)	11.4
11.5		None	

Table 1.9-12

Summary of Differences from SRP Section 12

SRP Section	Specific SRP Acceptance Criteria	Summary Description of Difference	Subsection Where Discussed
12.1		None	
12.2		None	
12.3 - 12.4		None	
12.5		None	

Table 1.9-13

Summary of Differences from SRP Section 13

SRP Section	Specific SRP Acceptance Criteria	Summary Description of Difference	Subsection Where Discussed
13.1.1		Not applicable to a DCD*	
13.1.2 - 13.1.3		Not applicable to a DCD*	
13.2		Not applicable to a DCD*	
13.2.1		Not applicable to a DCD*	
13.2.2		Not applicable to a DCD*	
13.3		Not applicable to a DCD*	
13.4		Not applicable to a DCD*	
13.5		Not applicable to a DCD*	
13.5.1		Not applicable to a DCD*	
13.5.2		Not applicable to a DCD*	
13.6		Not applicable to a DCD*	

* See Chapter 13 for additional information.

Table 1.9-14

Summary of Differences from SRP Section 14

SRP Section	Specific SRP Acceptance Criteria	Summary Description of Difference	Subsection Where Discussed
14.2		None	
14.3		None	
14.3.1		None	
14.3.2		None	
14.3.3		None	
14.3.4		None	
14.3.5		None	
14.3.6		None	
14.3.7		None	
14.3.8		None	
14.3.9		None	
14.3.10		None	
14.3.11		None	

Table 1.9-15

Summary of Differences from SRP Section 15

SRP Section	Specific SRP Acceptance Criteria	Summary Description of Difference	Subsection Where Discussed
15.0.1		None	
15.0.2		None	
15.0.3		None	
15.1.1 – 15.1.4		ESBWR does not follow order of events in SRP	
15.1.1 – 15.1.4 and others	II.D Criteria 2 – Requires critical power ratio (CPR) to remain above MCPR safety limit for incidents of moderate frequency	ESBWR is licensed to the fraction of rods in transition boiling instead of to a CPR safety limit. See discussion under (c) of the Technical Rationale for this SRP.	15.2
15.1.1 – 15.1.4	II.D.6.b – Specifies a 0.8 multiplier on the reactivity insertion rate.	ESBWR applies an approved TRACG statisical uncertainty for control rod reactivity, and a conservative, Technical Specification rod motion specification.	15.2, 15.3, 5.2
15.1.5		Not applicable to the ESBWR	
15.2.1 – 15.2.5		ESBWR does not follow order of events in SRP	
15.2.6		ESBWR does not follow order of events in SRP	
15.2.7		ESBWR does not follow order of events in SRP	
15.2.8	Any activity release must be such that the calculated doses at the site boundary are a small fraction of the 10 CFR Part 100 guidelines.	Dose acceptance criterion of 25 mSv (2.5 rem) Total Effective Dose Equivalent (TEDE) used.	15.0.3, 15.4.7.5, 15.4.9.5

Table 1.9-15

Summary of Differences from SRP Section 15

SRP Section	Specific SRP Acceptance Criteria	Summary Description of Difference	Subsection Where Discussed
15.3.1 - 15.3.2		Not applicable to the ESBWR	
15.3.3 - 15.3.4		Not applicable to the ESBWR	
15.4.1		ESBWR does not follow order of events in SRP	
15.4.2		ESBWR does not follow order of events in SRP	
15.4.3		ESBWR does not follow order of events in SRP	
15.4.4 - 15.4.5		Not applicable to the ESBWR	
15.4.6		Not applicable to the ESBWR	
15.4.7		ESBWR does not follow order of events in SRP	
15.4.8		Not applicable to the ESBWR	
15.4.9		Postulated events are not applicable to the ESBWR. Discussion is provided to show this event cannot occur with ESBWR FMCRD design.	15.4.6
15.5.1 - 15.5.2		Postulated events addressed under other SRP sections for the ESBWR	
15.6.1		ESBWR does not follow order of events in SRP	
15.6.2	Doses at exclusion area and low population zone boundaries are less than 300 mSv (30 rem) for the thyroid and 25 mSv (2.5 rem) for the whole-body doses.	Dose acceptance criterion of 25 mSv (2.5 rem) Total Effective Dose Equivalent (TEDE) used.	15.0.3, 15.4.8.5
15.6.3		Not applicable to the ESBWR	

Table 1.9-15

Summary of Differences from SRP Section 15

SRP Section	Specific SRP Acceptance Criteria	Summary Description of Difference	Subsection Where Discussed
15.6.4		ESBWR does not follow order of events in SRP. Radiological analysis assumptions superseded by SRP 15.0.1.	
15.6.5		ESBWR does not follow order of events in SRP. Radiological analysis assumptions superseded by SRP 15.0.1.	
15.7.1		SRP deleted	
15.7.2		SRP deleted	
15.7.3		ESBWR does not follow order of events in SRP	
15.7.4		ESBWR does not follow order of events in SRP. Radiological analysis assumptions superseded by SRP 15.0.1.	
15.7.5	Doses at exclusion area and low population zone boundaries are less than 750 mSv (75 rem) for the thyroid and 60 mSv (6 rem) for the whole-body doses.	ESBWR does not follow order of events in SRP. Dose acceptance criterion of 63 mSv (6.3 rem) Total Effective Dose Equivalent (TEDE) used.	15.0.3, 15.4.10
15.8		ESBWR does not follow order of events in SRP	

Table 1.9-16

Summary of Differences from SRP Section 16

SRP Section	Specific SRP Acceptance Criteria	Summary Description of Difference	Subsection Where Discussed
16.0	NUREG-0123	ESBWR is based on NUREG-1434, Revision 3.1	Chapter 16

Table 1.9-17

Summary of Differences from SRP Section 17

SRP Section	Specific SRP Acceptance Criteria	Summary Description of Difference	Subsection Where Discussed
17.1	II.1 * – Applicant is responsible for overall QA program	GEH and its ESBWR Team Members are responsible for their own QA programs.	17.1.1, 17.1.2
17.1	II.3, 10, 11 and 13 * – Meet identified quality-related Regulatory Guides	Alternate positions employed for specific Regulatory Guides.	17.1.3, 17.1.10, 17.1.11, 17.1.13
17.2		Not applicable to a DCD	
17.3		Not applicable to a DCD	

* The actual SRP acceptance criteria in Section 17.1 contain additional characters beyond those shown in this table (e.g. criterion II.1 contains items 1A1 to 1C3).

Table 1.9-18

Summary of Differences from SRP Section 18

SRP Section	Specific SRP Acceptance Criteria	Summary Description of Difference	Subsection Where Discussed
18.0	18.0, Revision 1		
18.1		As discussed in SRP 18.0, Revision 1, because technology is continually advancing, details of the HFE design need not be complete before the NRC issuance of a design certification. As such, this presentation under 10 CFR Part 52 primarily focuses on the HFE design process.	
18.2		None	
18.3		None	
18.4		None	
18.5		None	
18.6		None	
18.7		None	
18.8		None	
Appendix A		None	
Appendix B		None	
Appendix C		None	
Appendix D		None	
Appendix E		None	
Appendices F and H		None	
Appendix G		None	

Table 1.9-19

Summary of Differences from SRP Section 19

SRP Section	Specific SRP Acceptance Criteria	Summary Description of Difference	Subsection Where Discussed
19.0		Not applicable to ESBWR.	
19.1		Not applicable to ESBWR.	

Table 1.9-20

NRC Standard Review Plans and Branch Technical Positions Applicability to ESBWR

SRP No.	SRP Title or BTP	Appl. Rev.	Issued Date	ESBWR Appli-cable?	Comments
Chapter 1 Introduction and General Description of Plant					
1.8	Interfaces for Standard Designs	2	Draft 04/1996	Yes	
Chapter 2 Site Characteristics					
2.1.1	Site Location and Description	3	Draft 04/1996	—	BSP (see notes)
2.1.2	Exclusion Area Authority and Control	3	Draft 04/1996	—	BSP
2.1.3	Population Distribution	3	Draft 04/1996	—	BSP
2.2.1–2.2.2	Identification of Potential Hazards in Site Vicinity	3	Draft 04/1996	—	BSP
2.2.3	Evaluation of Potential Accidents	3	Draft 04/1996	—	BSP
2.3.1	Regional Climatology	3	Draft 01/2006	—	BSP
2.3.2	Local Meteorology	3	Draft 04/1996	—	BSP
2.3.3	Onsite Meteorological Measurements Programs	3	Draft 04/1996	—	BSP
	Appendix A	3	Draft 04/1996	—	BSP
2.3.4	Short-Term Diffusion Estimates for Accidental Atmospheric Releases	3	Draft 04/1996	—	BSP
2.3.5	Long-Term Diffusion Estimates	3	Draft 04/1996	—	BSP
2.4.1	Hydrologic Description	2	07/1981	—	BSP
	Appendix A	2	07/1981	—	BSP
2.4.2	Floods	3	04/1989	—	BSP

Table 1.9-20

NRC Standard Review Plans and Branch Technical Positions Applicability to ESBWR

SRP No.	SRP Title or BTP	Appl. Rev.	Issued Date	ESBWR Appli-cable?	Comments
2.4.3	Probable Maximum Flood (PMF) on Streams and Rivers	3	04/1989	—	BSP
2.4.4	Potential Dam Failures	2	07/1981	—	BSP
2.4.5	Probable Maximum Surge and Seiche Flooding	2	07/1981	—	BSP
2.4.6	Probable Maximum Tsunami Flooding	2	07/1981	—	BSP
2.4.7	Ice Effects	2	07/1981	—	BSP
2.4.8	Cooling Water Canals and Reservoirs	2	07/1981	—	BSP
2.4.9	Channel Diversions	2	07/1981	—	BSP
2.4.10	Flood Protection Requirements	2	07/1981	—	BSP
2.4.11	Cooling Water Supply	2	07/1981	—	BSP
2.4.12	Groundwater	2	07/1981	—	BSP
	BTP HGEB 1	2	07/1981	—	BSP
2.4.13	Accidental Releases of Liquid Effluents in Ground and Surface Waters	2	07/1981	—	BSP
2.4.14	Technical Specifications and Emergency Operation Requirements	2	07/1981	—	BSP
2.5.1	Basic Geologic and Seismic Information	3	03/1997	—	BSP
2.5.2	Vibratory Ground Motion	3	03/1997	—	BSP
2.5.3	Surface Faulting	3	03/1997	—	BSP
2.5.4	Stability of Subsurface Materials and Foundations	2	07/1981	—	BSP
2.5.5	Stability of Slopes	2	07/1981	—	BSP
Chapter 3 Design of Structures, Components, Equipment, and Systems					
3.2.1	Seismic Classification	1	07/1981	Yes	
3.2.2	System Quality Group Classification	2	Draft 04/1996	Yes	
	Appendix A (Formerly BTP RSB 3-1)	2	Draft 04/1996	Yes	

Table 1.9-20

NRC Standard Review Plans and Branch Technical Positions Applicability to ESBWR

SRP No.	SRP Title or BTP	Appl. Rev.	Issued Date	ESBWR Appli-cable?	Comments
	Appendix B (Formerly BTP RSB 3-2)	2	Draft 04/1996	Yes	
	Appendix C	2	Draft 04/1996	Yes	
3.3.1	Wind Loadings	2	07/1981	Yes	
3.3.2	Tornado Loadings	2	07/1981	Yes	
3.4.1	Flood Protection	2	07/1981	Yes	
3.4.2	Analysis Procedures	2	07/1981	Yes	
3.5.1.1	Internally Generated Missiles (Outside Containment)	2	07/1981	Yes	
3.5.1.2	Internally Generated Missiles (Inside Containment	2	07/1981	Yes	
3.5.1.3	Turbine Missiles	2	07/1981	Yes	
3.5.1.4	Missiles Generated by Natural Phenomena	2	07/1981	Yes	
	BTP ASB 3-2	2	07/1981	—	Superseded by RG 1.117.
3.5.1.5	Site Proximity Missiles (Except Aircraft)	1	07/1981	Yes	
3.5.1.6	Aircraft Hazards	2	07/1981	Yes	
3.5.2	Structures, Systems, and Components to be Protected from Externally Generated Missiles	2	07/1981	Yes	
3.5.3	Barrier Design Procedures	1	07/1981	Yes	
	Appendix A	0	07/1981	Yes	
3.6.1	Plant Design for Protection Against Postulated Piping Failures in Fluid Systems Outside Containment	3	Draft 04/1996	Yes	
	BTP SPLB 3-1	3	Draft 04/1996	Yes	

Table 1.9-20

NRC Standard Review Plans and Branch Technical Positions Applicability to ESBWR

SRP No.	SRP Title or BTP	Appl. Rev.	Issued Date	ESBWR Appli-cable?	Comments
	Appendix A to SPLB 3-1	3	Draft 04/1996	Yes	
	Appendix B to SPLB 3-1	3	Draft 04/1996	Yes	
	Appendix C to SPLB 3-1	3	Draft 04/1996	Yes	
3.6.2	Determination of Rupture Locations and Dynamic Effects Associated with the Postulated Rupture of Piping	2	Draft 04/1996	Yes	
	BTP 3-4	2	03/2007	Yes	Replaces BTP EMEB 3-1 from 04/1996 draft.
3.6.3	Leak-Before-Break Evaluation Procedures	0	03/1987	—	Not credited.
3.7.1	Seismic Design Parameters	3	03/2007	Yes	
	Appendix A	3	03/2007	Yes	
	Appendix B	3	3/2007	Yes	
	Appendix C	3	3/2007	Yes	
	Appendix D	3	3/2007	Yes	
3.7.2	Seismic System Analysis	2	08/1989	Yes	
	Appendix A	0	08/1989	Yes	
3.7.3	Seismic Subsystem Analysis	3	03/2007	Yes	
3.7.4	Seismic Instrumentation	1	07/1981	Yes	
3.8.1	Concrete Containment	1	07/1981	Yes	
	Appendix	0	07/1981	Yes	
3.8.2	Steel Containment	1	07/1981	Yes	Applies to steel components of the containment vessel.

Table 1.9-20

NRC Standard Review Plans and Branch Technical Positions Applicability to ESBWR

SRP No.	SRP Title or BTP	Appl. Rev.	Issued Date	ESBWR Appli-cable?	Comments
3.8.3	Concrete and Steel Internal Structures of Steel or Concrete Containments	1	07/1981	Yes	
3.8.4	Other Seismic Category I Structures	1	07/1981	Yes	
	Appendix A	0	07/1981	Yes	
	Appendix B	0	07/1981	Yes	
	Appendix C	0	07/1981	Yes	
	Appendix D	0	07/1981	Yes	
3.8.5	Foundations	1	07/1981	Yes	
3.9.1	Special Topics for Mechanical Components	3	Draft 04/1996	Yes	
3.9.2	Dynamic Testing and Analysis of Systems, Components, and Equipment	3	Draft 04/1996	Yes	
3.9.3	ASME Code Class 1, 2, and 3 Components, Component Supports, and Core Support Structures	2	Draft 04/1996	Yes	
	Appendix A	1	04/1984	Yes	
3.9.4	Control Rod Drive Systems	2	04/1984	Yes	
3.9.5	Reactor Pressure Vessel Internals	3	Draft 04/1996	Yes	
3.9.6	Inservice Testing of Pumps and Valves	3	Draft 04/1996	Yes	
3.9.7	Risk-Informed Inservice Testing	0	08/1998	—	COL
3.9.8	Review of Risk-Informed Inservice Inspection of Piping	0	09/2003	—	COL
3.10	Seismic and Dynamic Qualification of Mechanical and Electrical Equipment	3	Draft 04/1996	Yes	
3.11	Environmental Qualification of Mechanical and Electrical Equipment	3	03/2007	Yes	

Table 1.9-20

NRC Standard Review Plans and Branch Technical Positions Applicability to ESBWR

SRP No.	SRP Title or BTP	Appl. Rev.	Issued Date	ESBWR Appli-cable?	Comments
Chapter 4 Reactor					
4.2	Fuel System Design	3	Draft 04/1996	Yes	
	Appendix A	3	Draft 04/1996	Yes	
	Appendix B	3	03/2007	Yes	
4.3	Nuclear Design	3	Draft 04/1996	Yes	
	BTP CPB 4.3-1	3	Draft 04/1996	No	PWR only.
4.4	Thermal and Hydraulic Design	2	Draft 04/1996	Yes	
	Appendix	1	07/1981	—	Deleted.
4.5.1	Control Rod Drive Structural Materials	3	Draft 04/1996	Yes	
4.5.2	Reactor Internal and Core Support Materials	3	Draft 04/1996	Yes	
4.6	Functional Design of Control Rod Drive System	2	Draft 04/1996	Yes	
Chapter 5 Reactor Coolant System and Connected Systems					
5.2.1.1	Compliance with the Codes and Standard Rule, 10 CFR 50.55a	3	Draft 04/1996	Yes	
5.2.1.2	Applicable Code Cases	2	07/1981	Yes	
5.2.2	Overpressure Protection	3	Draft 04/1996	Yes	
	BTP RSB 5-2	3	Draft 04/1996	No	PWR only.
5.2.3	Reactor Coolant Pressure Boundary Materials	3	Draft 04/1996	Yes	
	BTP MTEB 5-7	2	07/1981	—	Superseded by NUREG-0313.

Table 1.9-20

NRC Standard Review Plans and Branch Technical Positions Applicability to ESBWR

SRP No.	SRP Title or BTP	Appl. Rev.	Issued Date	ESBWR Appli-cable?	Comments
5.2.4	Reactor Coolant Pressure Boundary Inservice Inspection and Testing	2	Draft 04/1996	Yes	
5.2.5	Reactor Coolant Pressure Boundary Leakage Detection	1	07/1981	Yes	
5.3.1	Reactor Vessel Materials	2	Draft 04/1996	Yes	
5.3.2	Pressure-Temperature Limits	2	Draft 04/1996	Yes	
	BTP EMCB 5-2	2	Draft 04/1996	Yes	
5.3.3	Reactor Vessel Integrity	2	Draft 04/1996	Yes	
5.4	Preface	1	07/1981	—	Deleted.
5.4.1.1	Pump Flywheel Integrity (PWR)	1	07/1981	No	PWR only.
5.4.2.1	Steam Generator Materials	2	07/1981	No	PWR only.
	BTP MTEB 5-3	2	07/1981	No	PWR only.
5.4.2.2	Steam Generator Tube Inservice Inspection	2	Draft 04/1996	No	PWR only.
5.4.6	Reactor Core Isolation Cooling System (BWR)	4	Draft 04/1996	Yes	ESBWR uses ICS and CRD cooling water.
5.4.7	Residual Heat Removal (RHR) System	4	Draft 04/1996	Yes	ESBWR uses ICS and RWCU/SDC.
	BTP RSB 5-1	4	Draft 04/1996	Yes	ESBWR uses ICS and RWCU/SDC.
5.4.8	Reactor Water Cleanup System (BWR)	3	Draft 04/1996	Yes	
5.4.11	Pressurizer Relief Tank	2	07/1981	No	PWR only.
5.4.12	Reactor Coolant System High Point Vents	0	07/1981	Yes	

Table 1.9-20

NRC Standard Review Plans and Branch Technical Positions Applicability to ESBWR

SRP No.	SRP Title or BTP	Appl. Rev.	Issued Date	ESBWR Appli-cable?	Comments
Chapter 6 Engineered Safety Features					
6.1.1	Engineered Safety Features Materials	2 [1]	Draft 04/1996	Yes	
	BTP MTEB 6-1	2	Draft 04/1996	No	PWR only.
6.1.2	Protective Coating Systems (Paints) – Organic Materials	3	Draft 04/1996	Yes	
6.2.1	Containment Functional Design	2	07/1981	Yes	
6.2.1.1.A	PWR Dry Containments, Including Subatmospheric Containments	2	07/1981	No	PWR only.
6.2.1.1.B	Ice Condenser Containments	2	07/1981	No	PWR only.
6.2.1.1.C	Pressure-Suppression Type BWR Containments	7	Draft 04/1996	Yes	
	Appendix A	7	Draft 04/1996	Yes	
	Appendix B	7	Draft 04/1996	Yes	
6.2.1.2	Subcompartment Analysis	2	07/1981	Yes	
6.2.1.3	Mass and Energy Release Analysis for Postulated Loss-of-Coolant Accidents	1	07/1981	Yes	
6.2.1.4	Mass and Energy Release Analysis for Postulated Secondary System Pipe Ruptures	1	07/1981	No	PWR only.
6.2.1.5	Minimum Containment Pressure Analysis for Emergency Core Cooling System Performance Capability Studies	2	07/1981	Yes	Applied to calculation of containment back-pressure for ECCS analyses.

[1] Should have been labeled Draft Rev. 3. Replaces Rev. 2 version issued in July 1981.

Table 1.9-20

NRC Standard Review Plans and Branch Technical Positions Applicability to ESBWR

SRP No.	SRP Title or BTP	Appl. Rev.	Issued Date	ESBWR Appli-cable?	Comments
	BTP CSB 6-1	2	07/1981	Yes	Applied to calculation of containment back-pressure for ECCS analyses.
6.2.2	Containment Heat Removal Systems	4	10/1985	Yes	
6.2.3	Secondary Containment Functional Design	2	07/1981	Part	Applies to part of Reactor Bldg. Design relies on holdup only.
	BTP CSB 6-3	2	07/1981	Yes	
6.2.4	Containment Isolation System	2	07/1981	Yes	
	BTP CSB 6-4	2	07/1981	Yes	
6.2.5	Combustible Gas Control in Containment	3	Draft 2003	Yes	See also 12/2003 revision to 10 CFR 50.44.
	Appendix A	2	07/1981	Yes	
	BTP CSB 6-2	2	07/1981	—	Superseded by Reg. Guide 1.7.
6.2.6	Containment Leakage Testing	2	07/1981	Yes	
6.2.7	Fracture Prevention of Containment Pressure Boundary	0	07/1981	Yes	
6.3	Emergency Core Cooling System	3	Draft 04/1996	Yes	
	BTP RSB 6-1	3	Draft 04/1996	No	PWR only.
6.4	Control Room Habitability Systems	3	03/2007	Yes	
	Appendix A	3	03/2007	Yes	

Table 1.9-20

NRC Standard Review Plans and Branch Technical Positions Applicability to ESBWR

SRP No.	SRP Title or BTP	Appl. Rev.	Issued Date	ESBWR Appli-cable?	Comments
6.5.1	ESF Atmosphere Cleanup Systems	2	07/1981	Yes	The ESBWR utilizes a safety-related filter system to protect the main control room environment following a design basis accident as discussed in Section 6.4.
6.5.2	Containment Spray as a Fission Product Cleanup System	2	12/1988	Partial	Drywell Spray function not credited. Used as guidance for elemental iodine coefficient in Subsection 15.4.4.5.2.1.
6.5.3	Fission Product Control Systems and Structures	2	07/1981	Yes	
6.5.4	Ice Condenser as a Fission Product Cleanup System	3	12/1988	No	PWR only.
6.5.5	Pressure Suppression Pools as a Fission Product Cleanup System	0	12/1988	Partial	ESBWR uses different containment design than discussed.
6.6	Inservice Inspection of Class 2 and 3 Components	1	07/1981	Yes	
6.7	Main Steam Isolation Valve Leakage Control System (BWR)	2	07/1981	No	No MSIV Leakage Control System.

Table 1.9-20

NRC Standard Review Plans and Branch Technical Positions Applicability to ESBWR

SRP No.	SRP Title or BTP	Appl. Rev.	Issued Date	ESBWR Appli-cable?	Comments
Chapter 7 Instrumentation and Controls					
7.0	Instrumentation and Controls – Overview of Review Process	4	06/1997	Yes	
	Appendix 7.0-A Review Process for Digital Instrumentation and Control Systems	4	06/1997	Yes	
7.1	Instrumentation and Controls – Introduction	4	06/1997	Yes	
	Table 7-1 Acceptance Criteria and Guidelines for Instrumentation and Control Systems Important to Safety	4	06/1997	Yes	
	Appendix 7.1-A	4	06/1997	Yes	
	Appendix 7.1-B	4	06/1997	Yes	
	Appendix 7.1-C	4	06/1997	Yes	
7.2	Reactor Trip System	4	06/1997	Yes	
7.3	Engineered Safety Features Systems	4	06/1997	Yes	
7.4	Safe Shutdown Systems	4	06/1997	Yes	
7.5	Information Systems Important to Safety	4	06/1997	Yes	
7.6	Interlock Systems Important to Safety	4	06/1997	Yes	
7.7	Control Systems	4	06/1997	Yes	
7.8	Diverse Instrumentation and Control Systems	4	06/1997	Yes	
7.9	Data Communication Systems	4	06/1997	Yes	
	Appendix 7-A Branch Technical Positions (HICB)	4	06/1997	Yes	
BTP HICB-1	Guidance on Isolation of Low-Pressure Systems from the High-Pressure Reactor Coolant System	4	06/1997	Yes	

Table 1.9-20

NRC Standard Review Plans and Branch Technical Positions Applicability to ESBWR

SRP No.	SRP Title or BTP	Appl. Rev.	Issued Date	ESBWR Appli-cable?	Comments
BTP HICB-2	Guidance on Requirements on Motor-Operated Valves in the Emergency Core Cooling System Accumulator Lines	4	06/1997	No	PWR only.
BTP HICB-3	Guidance on Protection System Trip Point Changes for Operation with Reactor Coolant Pumps Out of Service	4	06/1997	No	ESBWR does not use reactor coolant pumps.
BTP HICB-4	Guidance on Design Criteria for Auxiliary Feedwater Systems	4	06/1997	No	PWR only.
BTP HICB-5	Guidance on Spurious Withdrawals of Single Control Rods in Pressurized Water Reactors	4	06/1997	No	PWR only.
BTP HICB-6	Guidance on Design of Instrumentation and Controls Provided to Accomplish Changeover from Injection to Recirculation Mode	4	06/1997	No	No recirculation mode for ESBWR.
BTP HICB-7	Not used			—	
BTP HICB-8	Guidance for Application of Regulatory Guide 1.22	4	06/1997	Yes	
BTP HICB-9	Guidance on Requirements for Reactor Protection System Anticipatory Trips	4	06/1997	Yes	
BTP HICB-10	Guidance on Application of Regulatory Guide 1.97	4	06/1997	Yes	
BTP HICB-11	Guidance on Application and Qualification of Isolation Devices	4	06/1997	Yes	
BTP HICB-12	Guidance on Establishing and Maintaining Instrument Setpoints	4	06/1997	Yes	
BTP HICB-13	Guidance on Cross-Calibration of Protection System Resistance Temperature Detectors	4	06/1997	No	RTDs are not used in the protection systems of the ESBWR.

Table 1.9-20

NRC Standard Review Plans and Branch Technical Positions Applicability to ESBWR

SRP No.	SRP Title or BTP	Appl. Rev.	Issued Date	ESBWR Appli-cable?	Comments
BTP HICB-14	Guidance on Software Reviews for Digital Computer-Based Instrumentation and Control Systems	4	06/1997	Yes	
BTP HICB-15	Not used			—	
BTP HICB-16	Guidance on the Level of Detail Required for Design Certification Applications Under 10 CFR Part 52	4	06/1997	Yes	
BTP HICB-17	Guidance on Self-Test and Surveillance Test Provisions	4	06/1997	Yes	
BTP HICB-18	Guidance on Use of Programmable Logic Controllers in Digital Computer-Based Instrumentation and Control Systems	4	06/1997	Yes	
BTP HICB-19	Guidance for Evaluation of Defense-in-Depth and Diversity in Digital Computer-Based Instrumentation and Control Systems	4	06/1997	Yes	
BTP HICB-20	Not used			—	
BTP HICB-21	Guidance on Digital Computer Real-Time Performance	4	06/1997	Yes	
	Appendix 7-B General Agenda, Station Site Visits	4	06/1997	—	COL (see notes).
Chapter 8 Electric Power					
8.1	Electric Power-Introduction	3	Draft 04/1996	Yes	
	Table 8-1 Acceptance Criteria and Guidelines for Electric Power Systems	3	Draft 04/1996	Yes	
8.2	Offsite Power System	4	Draft 04/1996	Yes	Interface (see notes).
	Appendix A	4	Draft 04/1996	Yes	Interface.

Table 1.9-20

NRC Standard Review Plans and Branch Technical Positions Applicability to ESBWR

SRP No.	SRP Title or BTP	Appl. Rev.	Issued Date	ESBWR Appli-cable?	Comments
	Appendix B	4	Draft 04/1996	Yes	
8.3.1	AC Power Systems (Onsite)	3	Draft 04/1996	Yes	
	Appendix	2	07/1981	—	Superseded by BTP PSB-2 (later renamed ICSB 2), which has been deleted. Applicable guidance now in RG 1.9.
8.3.2	DC Power Systems (Onsite)	3	Draft 04/1996	Yes	
	Appendix 8-A – Branch Technical Positions (PSB)	3	Draft 04/1996	Yes	
	BTP ICSB 2 (PSB)	2	07/1981	—	Deleted. Applicable guidance now in RG 1.9.
	BTP ICSB 4 (PSB)	3	Draft 04/1996	No	
	BTP ICSB 8 (PSB)	3	Draft 04/1996	No	ESBWR has no emergency diesel generators.
	BTP ICSB 11 (PSB)	3	Draft 04/1996	Yes	
	BTP ICSB 15 (PSB)	2	07/1981	—	Deleted.
	BTP ICSB 17 (PSB)	2	07/1981	—	Superseded by Reg. Guide 1.9.
	BTP ICSB 18 (PSB)	3	Draft 04/1996	No	

Table 1.9-20

NRC Standard Review Plans and Branch Technical Positions Applicability to ESBWR

SRP No.	SRP Title or BTP	Appl. Rev.	Issued Date	ESBWR Appli-cable?	Comments
	BTP ICSB 21 (PSB)	3	Draft 04/1996	Yes	
	BTP PSB 1	3	Draft 04/1996	Yes	
	BTP PSB 2	3	Draft 04/1996	No	
	Appendix 8-B – General Agenda, Station Site Visits	1	Draft 04/1996	—	COL
Chapter 9 Auxiliary Systems					
9.1.1	New Fuel Storage	3	Draft 04/1996	Yes	
9.1.2	Spent Fuel Storage	4	Draft 04/1996	Yes	
9.1.3	Spent Fuel Pool Cooling and Cleanup System	1	07/1981	Yes	
9.1.4	Light Load Handling System (Related to Refueling)	2	07/1981	Yes	
	BTP ASB 9-1	2	07/1981	—	Superseded by NUREG-0554.
9.1.5	Overhead Heavy Load Handling Systems	0	07/1981	Yes	
9.2.1	Station Service Water System	5	Draft 04/1996	Yes	
9.2.2	Reactor Auxiliary Cooling Water Systems	3	06/1986	Yes	
9.2.3	Demineralized Water Makeup System	2	07/1981	Yes	
9.2.4	Potable and Sanitary Water Systems	2	07/1981	—	Interface.
9.2.5	Ultimate Heat Sink	2	07/1981	—	Interface.
	BTP ASB 9-2	2	07/1981	Yes	
9.2.6	Condensate Storage Facilities	2	07/1981	Yes	
9.3.1	Compressed Air System	1	07/1981	Yes	

Table 1.9-20

NRC Standard Review Plans and Branch Technical Positions Applicability to ESBWR

SRP No.	SRP Title or BTP	Appl. Rev.	Issued Date	ESBWR Appli-cable?	Comments
9.3.2	Process and Post-Accident Sampling Systems	2	07/1981	Yes	
9.3.3	Equipment and Floor Drainage System	2	07/1981	Yes	
9.3.4	Chemical and Volume Control System (PWR) (Including Boron Recovery System)	3	Draft 04/1996	No	PWR only.
9.3.5	Standby Liquid Control System (BWR)	3	Draft 04/1996	Yes	
9.4.1	Control Room Area Ventilation System	2	07/1981	Yes	
9.4.2	Spent Fuel Pool Area Ventilation System	2	07/1981	Yes	
9.4.3	Auxiliary and Radwaste Area Ventilation System	2	07/1981	Yes	
9.4.4	Turbine Area Ventilation System	2	07/1981	Yes	
9.4.5	Engineered Safety Feature Ventilation System	2	07/1981	Yes	The EFU portion of the CRHAVS supplies the engineered safety feature for CRHA radiological protection as described in Section 6.4 and Subsection 9.4.1.
9.5.1	Fire Protection Program	4	10/2003	Yes	
	BTP SPLB 9.5-1	4	10/2003	Yes	
	Appendix A to BTP SPLB 9.5-1	4	10/2003	No	
	Appendix B to BTP SPLB 9.5-1	4	10/2003	Yes	
	Appendix C to BTP SPLB 9.5-1	4	10/2003	No	
	Appendix D to BTP SPLB 9.5-1	4	10/2003	No	

Table 1.9-20

NRC Standard Review Plans and Branch Technical Positions Applicability to ESBWR

SRP No.	SRP Title or BTP	Appl. Rev.	Issued Date	ESBWR Appli-cable?	Comments
	Appendix E to BTP SPLB 9.5-1	4	10/2003	No	
9.5.2	Communication Systems	2	07/1981	Yes	
9.5.3	Lighting Systems	2	07/1981	Yes	
9.5.4	Emergency Diesel Engine Fuel Oil Storage and Transfer System	2	07/1981	No	ESBWR Diesels are nonsafety-related.
9.5.5	Emergency Diesel Engine Cooling Water System	2	07/1981	No	ESBWR Diesels are nonsafety-related.
9.5.6	Emergency Diesel Engine Starting System	2	07/1981	No	ESBWR Diesels are nonsafety-related.
9.5.7	Emergency Diesel Engine Lubrication System	2	07/1981	No	ESBWR Diesels are nonsafety-related.
9.5.8	Emergency Diesel Engine Combustion Air Intake and Exhaust System	2	07/1981	No	ESBWR Diesels are nonsafety-related.
Chapter 10 Steam and Power Conversion System					
10.2	Turbine Generator	2	07/1981	Yes	
10.2.3	Turbine Disk Integrity	1	07/1981	Yes	
10.3	Main Steam Supply System	3	04/1984	Yes	
10.3.6	Steam and Feedwater System Materials	2	07/1981	Yes	
10.4.1	Main Condensers	2	07/1981	Yes	
10.4.2	Main Condenser Evacuation System	2	07/1981	Yes	
10.4.3	Turbine Gland Sealing System	2	07/1981	Yes	

Table 1.9-20

NRC Standard Review Plans and Branch Technical Positions Applicability to ESBWR

SRP No.	SRP Title or BTP	Appl. Rev.	Issued Date	ESBWR Appli-cable?	Comments
10.4.4	Turbine Bypass System	2	07/1981	Yes	
10.4.5	Circulating Water System	2	07/1981	Yes	
10.4.6	Condensate Cleanup System	2	07/1981	Yes	
10.4.7	Condensate and Feedwater System	3	04/1984	Yes	
	BTP ASB 10-2	3	04/1984	No	PWR only.
10.4.8	Steam Generator Blowdown System (PWR)	3	Draft 04/1996	No	PWR only.
10.4.9	Auxiliary Feedwater System (PWR)	2	07/1981	No	PWR only.
	BTP ASB 10-1	2	07/1981	No	PWR only.
Chapter 11 Radioactive Waste Management					
11.1	Source Terms	3	Draft 04/1996	Yes	
11.2	Liquid Waste Management Systems	3	Draft 04/1996	Yes	
	BTP 11-6	0	03/2007	Yes	
11.3	Gaseous Waste Management Systems	3	03/2007	Yes	
	BTP 11-5	3	03/2007	Yes	
11.4	Solid Waste Management Systems	3	03/2007	Yes	
	BTP 11-3	3	03/2007	Yes	
	Appendix 11.4-A	3	03/2007	Yes	
11.5	Process and Effluent Radiological Monitoring Instrumentation and Sampling Systems	4	Draft 04/1996	Yes	
	Appendix 11.5-A	4	Draft 04/1996	Yes	
Chapter 12 Radiation Protection					
12.1	Assuring That Occupational Radiation Exposures are As Low As Is Reasonably Achievable	2	07/1981	Yes	

Table 1.9-20

NRC Standard Review Plans and Branch Technical Positions Applicability to ESBWR

SRP No.	SRP Title or BTP	Appl. Rev.	Issued Date	ESBWR Appli-cable?	Comments
12.2	Radiation Sources	3	Draft 04/1996	Yes	
12.3–12.4	Radiation Protection Design Features	3	Draft 04/1996	Yes	
12.5	Operational Radiation Protection Program	3	Draft 04/1996	—	COL
Chapter 13 Conduct of Operations					
13.1.1	Management and Technical Support Organization	4	11/1999	—	COL
13.1.2–13.1.3	Operating Organization	5	07/2005	—	COL
13.2	Training	2	07/1981	No	Replaced by SRP Sections 13.2.1 and 13.2.2.
13.2.1	Reactor Operator Training	2	Draft 12/2002	—	COL. Draft for comments.
13.2.2	Training for Non-Licensed Plant Staff	2	Draft 12/2002	—	COL. Draft for comments.
13.3	Emergency Planning	2	07/1981	—	COL
13.4	Operational Review	2	07/1981	—	COL
13.5	Plant Procedures	2	07/1981	No	Replaced by SRP Sections 13.5.1 and 13.5.2.
13.5.1	Administration Procedures	0	07/1981	—	COL
13.5.2	Operating and Maintenance Procedures	1	07/1985	—	COL
	Appendix A	0	07/1985	—	COL
13.5.2.1	Operating and Emergency Operating Procedures	1	Draft 12/2002	—	COL Draft for comments.

Table 1.9-20

NRC Standard Review Plans and Branch Technical Positions Applicability to ESBWR

SRP No.	SRP Title or BTP	Appl. Rev.	Issued Date	ESBWR Appli-cable?	Comments
13.6	Physical Security	2	07/1981	Yes	Primarily COL; Safeguards information provided for certification.
Chapter 14 Initial Test Program					
14.1	Initial Plant Test Programs – PSAR	2	07/1981	-	Deleted.
14.2	Initial Plant Test Programs – FSAR	2	07/1981	Yes	
14.2.1	Generic Guidelines for Extended Power Uprate Testing Programs	0	Draft 12/2002	No	Draft for comments
14.3	Standard Plant Design, Initial Test Program – Final Design Approval (FDA)	2	07/1981	-	Deleted.
14.3	Inspections, Tests, Analyses, and Acceptance Criteria – Design Certification	0	03/2007	Yes	
14.3.1	Site Parameters (Tier 1)	0	03/2007	Yes	Incorporated in Tier 2 Chapter 2.
14.3.2	Structural and Systems Engineering (Tier 1)	0	03/2007	Yes	
14.3.3	Piping Systems and Components (Tier 1)	0	03/2007	Yes	
14.3.4	Reactor Systems (Tier 1)	0	03/2007	Yes	
14.3.5	Instrumentation and Controls (Tier 1)	0	03/2007	Yes	
14.3.6	Electrical Systems (Tier 1)	0	03/2007	Yes	
14.3.7	Plant Systems (Tier 1)	0	03/2007	Yes	
14.3.8	Radiation Protection and Emergency Preparedness (Tier 1)	0	03/2007	Yes	
14.3.9	Human Factors Engineering (Tier 1)	0	03/2007	Yes	
14.3.10	Initial Test Program and D-RAP (Tier 1)	0	03/2007	Yes	
14.3.11	Containment Systems and Severe Accidents (Tier 1)	0	03/2007	Yes	

Table 1.9-20

NRC Standard Review Plans and Branch Technical Positions Applicability to ESBWR

SRP No.	SRP Title or BTP	Appl. Rev.	Issued Date	ESBWR Appli-cable?	Comments
	Appendix A – Information on Evolutionary Design Certification Reviews	0	03/2007	Yes	
	Appendix B – Review Branch Responsibilities for the Evolutionary Designs	0	03/2007	Yes	
Chapter 15 Accident Analysis					
15.0	Introduction	2	07/1981	Yes	
15.0.1	Radiological Consequence Analyses Using Alternate Source Terms	0	07/2000	Yes	ESBWR does not follow SRP's order of events.
15.0.2	Review of Transient and Accident Analysis Methods	0	12/2005	Yes	ESBWR does not follow SRP's order of events.
15.0.3	Design Basis Accident Radiological Consequence Analyses for Advanced Light Water Reactors	0	03/2007	Yes	
15.1.1–15.1.4	Decrease in Feedwater Temperature, Increase in Feedwater Flow, Increase in Steam Flow, and Inadvertent Opening of a Steam Generator Relief or Safety Valve	2	Draft 04/1996	Yes	ESBWR does not follow SRP's order of events.
15.1.5	Steam System Piping Failures Inside and Outside of Contamination (PWR)	3	Draft 04/1996	No	PWR only.
	Appendix A	3	Draft 04/1996	No	PWR only.
15.2.1–15.2.5	Loss of External Load, Turbine Trip, Loss of Condenser Vacuum, Closure of Main Steam Isolation Valve (BWR), and Steam Pressure Regulator Failure (Closed)	2	Draft 04/1996	Yes	ESBWR does not follow SRP's order of events.

Table 1.9-20

NRC Standard Review Plans and Branch Technical Positions Applicability to ESBWR

SRP No.	SRP Title or BTP	Appl. Rev.	Issued Date	ESBWR Appli-cable?	Comments
15.2.6	Loss of Nonemergency AC Power to the Station Auxiliaries	2	Draft 04/1996	Yes	ESBWR does not follow SRP's order of events.
15.2.7	Loss of Normal Feedwater Flow	2	Draft 04/1996	Yes	ESBWR does not follow SRP's order of events.
15.2.8	Feedwater System Pipe Breaks Inside and Outside Containment (PWR)	2	Draft 04/1996	Part	Portions applicable to BWR are considered.
15.3.1–15.3.2	Loss of Forced Reactor Coolant Flow Including Trip of Pump and Flow Controller Malfunctions	2	Draft 04/1996	No	No forced Recirc Systems in ESBWR.
15.3.3–15.3.4	Reactor Coolant Pump Rotor Seizure and Reactor Coolant Pump Shaft Break	3	Draft 04/1996	No	No forced Recirc Systems in ESBWR.
15.4.1	Uncontrolled Control Rod Assembly Withdrawal from a Subcritical of Low Power Startup Condition	3	Draft 04/1996	Yes	ESBWR does not follow SRP's order of events.
15.4.2	Uncontrolled Control Rod Assembly Withdrawal at Power	3	Draft 04/1996	Yes	ESBWR does not follow SRP's order of events.
15.4.3	Control Rod Misoperation (System Malfunction or Operator Error)	3	Draft 04/1996	Yes	ESBWR does not follow SRP's order of events.
15.4.4–15.4.5	Startup of an Inactive Loop or Recirculation Loop at an Incorrect Temperature, and Flow Controller Malfunction Causing an Increase in BWR Core Flow Rate	2	Draft 04/1996	No	No forced Recirc Systems in ESBWR.

Table 1.9-20

NRC Standard Review Plans and Branch Technical Positions Applicability to ESBWR

SRP No.	SRP Title or BTP	Appl. Rev.	Issued Date	ESBWR Appli-cable?	Comments
15.4.6	Chemical and Volume Control System Malfunction That Results in a Decrease in the Boron Concentration in the Reactor Coolant (PWR)	2	Draft 04/1996	No	PWR only.
15.4.7	Inadvertent Loading and Operation of a Fuel Assembly in an Improper Position	2	Draft 04/1996	Yes	ESBWR does not follow SRP's order of events.
15.4.8	Spectrum of Rod Ejection Accidents (PWR)	3	Draft 04/1996	No	PWR only.
	Appendix A	2	Draft 04/1996	No	PWR only.
15.4.9	Spectrum of Rod Drop Accidents (BWR)	3	Draft 04/1996	Yes	Radiological analysis assumptions superseded by SRP 15.0.1.
	Appendix A	3	Draft 04/1996	Yes	ESBWR does not follow SRP's order of events.
15.5.1–15.5.2	Inadvertent Operation of ECCS and Chemical and Volume Control System Malfunction That Increases Reactor Coolant Inventory	2	Draft 04/1996	Yes	ESBWR does not follow SRP's order of events.
15.6.1	Inadvertent Opening of a PWR Pressurizer Relief Valve or a BWR Relief Valve	2	Draft 04/1996	Yes	ESBWR does not follow SRP's order of events.
15.6.2	Radiological Consequences of the Failure of Small Lines Carrying Primary Coolant Outside Containment	3	Draft 04/1996	Yes	Radiological analysis assumptions superseded by SRP 15.0.1.

Table 1.9-20

NRC Standard Review Plans and Branch Technical Positions Applicability to ESBWR

SRP No.	SRP Title or BTP	Appl. Rev.	Issued Date	ESBWR Appli-cable?	Comments
15.6.3	Radiological Consequences of Steam Generator Tube Failure (PWR)	3	Draft 04/1996	No	PWR only.
15.6.4	Radiological Consequences of Main Steam Line Failure Outside Containment (BWR)	3	Draft 04/1996	Yes	Radiological analysis assumptions superseded by SRP 15.0.1.
15.6.5	Loss-of-Coolant Accidents Resulting from Spectrum of Postulated Piping Breaks Within the Reactor Coolant Pressure Boundary	3	Draft 04/1996	Yes	Radiological analysis assumptions superseded by SRP 15.0.1.
	Appendix A	2	Draft 04/1996	No	ESBWR does not follow SRP's order of events.
	Appendix B	2	Draft 04/1996	No	ESBWR does not follow SRP's order of events.
	Appendix C	2	07/1981	—	Deleted.
	Appendix D	2	Draft 04/1996	No	See 6.7 above.
15.7.1	Waste Gas System Failure	1	07/1981	—	Deleted.
15.7.2	Radioactive Liquid Waste System Leak or Failure (Released to Atmosphere)	1	07/1981	—	Deleted.
15.7.3	Postulated Radioactive Release Due to Liquid-Containing Tank Failures	2	07/1981	Yes	ESBWR does not follow SRP's order of events.

Table 1.9-20

NRC Standard Review Plans and Branch Technical Positions Applicability to ESBWR

SRP No.	SRP Title or BTP	Appl. Rev.	Issued Date	ESBWR Appli-cable?	Comments
15.7.4	Radiological Consequences of Fuel Handling Accidents	2	Draft 04/1996	Yes	Radiological analysis assumptions superseded by SRP 15.0.1.
15.7.5	Spent Fuel Cask Drop Accidents	3	Draft 04/1996	Yes	ESBWR does not follow SRP's order of events.
15.8	Anticipated Transients Without Scram	1	07/1981	Yes	ESBWR does not follow SRP's order of events.
	Appendix	1	07/1981	—	Deleted.
Chapter 16 Technical Specifications					
16.0	Technical Specifications	1	07/1981	Yes	
16.1	Risk-Informed Decisionmaking: Technical Specifications	0	08/1998	—	COL
Chapter 17 Quality Assurance					
17.1	Quality Assurance During the Design and Construction Phases	2	07/1981	Yes	
17.2	Quality Assurance During the Operations Phase	2	07/1981	—	COL
17.3	Quality Assurance Program Description	0	08/1990	—	COL
Chapter 18 Human Factors Engineering					
18.0	Human Factors Engineering	1	02/2004	Yes	
18.1	Control Room	0	09/1984	Yes	
	Appendix A	0	09/1984	Yes	
18.2	Safety Parameter Display System	0	01/1985	Yes	
	Appendix A	0	01/1985	Yes	

Table 1.9-20

NRC Standard Review Plans and Branch Technical Positions Applicability to ESBWR

SRP No.	SRP Title or BTP	Appl. Rev.	Issued Date	ESBWR Appli-cable?	Comments
Chapter 19 Severe Accidents					
19	Use of Probabilistic Risk Assessment in Plant-specific, Risk-informed Decisionmaking: General Guidance	1	11/2002	No	Will consider on a case-by-case basis.
19.1	Determining the Technical Adequacy of Probabilistic Risk Assessment Results for Risk-Informed Activities	0	02/2004	No	Will consider on a case-by-case basis.

Notes for Table 1.9-20:

(1) Interface – The items refer to a feature that is at the boundary of the certification scope and can affect or influence the design.

(2) COL (Combined License) – The responsibility for the item is with the licensee or plant designer, either during the COL phase or later during the life of the plant. (Subsection 1.9.4, Item 1.9-3-A)

(3) BSP (Bounding Site Parameter) – The requirements must be met by the plant site location chosen by the licensee. (Subsection 1.9.4, Item 1.9-3-A)

Table 1.9-21

NRC Regulatory Guides Applicability to ESBWR

RG No.	Regulatory Guide Title	Appl. Rev.	Issued Date	ESBWR Appli-cable?	Comments
1.1	Net Positive Suction Head for Emergency Core Cooling and Containment Heat Removal System Pumps	0	11/1970	No	No pumps in these safety-related functions for ESBWR
1.2	Thermal Shock to Reactor Pressure Vessels	0	11/1970	No	Withdrawn 7/31/1991
1.3	Assumptions Used for Evaluating the Potential Radiological Consequences of a Loss-of-Coolant Accident for Boiling Water Reactors	2	06/1974	No	Superseded by RG 1.183 for new plants.
1.4	Assumptions Used for Evaluating the Potential Radiological Consequences of a Loss-of-Coolant Accident for Pressurized Water Reactors	2	06/1974	No	PWR only
1.5	Assumptions Used for Evaluating the Potential Radiological Consequences of a Steam Line Break Accident for Boiling Water Reactors	0	03/1971	No	Supersceded by RG 1.183 for new plants.
1.6	Independence Between Redundant Standby (Onsite) Power Sources and Between Their Distribution Systems	0	03/1971	Yes	No safety-related Diesel Generators for ESBWR. URD intent – see Table 1.9-21a
1.7	Control of Combustible Gas Concentrations in Containment	3	03/2007	Yes	See Table 1.9-21a for optimization comment

Table 1.9-21

NRC Regulatory Guides Applicability to ESBWR

RG No.	Regulatory Guide Title	Appl. Rev.	Issued Date	ESBWR Appli-cable?	Comments
1.8	Qualification and Training of Personnel for Nuclear Power Plants	3	05/2000	—	COL. See note 1 and Table 1.9-21b
1.9	Selection, Design, Qualification and Testing of Emergency Diesel Generator Units Used as Class 1E Onsite Electric Power Systems at Nuclear Power Plants	3	07/1993	No	No safety-related Diesel Generators for ESBWR. URD intent – see Table 1.9-21a
1.11	Instrument Lines Penetrating Primary Reactor Containment (Safety Guide 11) and Supplement to Safety Guide 11, Backfitting Considerations	0	03/1971	Yes	Supplement issued 02/1972
1.12	Nuclear Power Plant Instrumentation for Earthquakes	2	03/1997	Yes	
1.13	Spent Fuel Storage Facility Design Basis	1	12/1975	Yes	URD Intent – see Table 1.9-21a. See also proposed Rev 2 published 12/1981 as CE 913-5.
1.14	Reactor Coolant Pump Flywheel Integrity	1	08/1975	No	PWR only
1.16	Reporting of Operating Information – Appendix A Technical Specifications	4	08/1975	—	COL
1.17	Protection of Nuclear Power Plants Against Industrial Sabotage	1	06/1973	No	Withdrawn 7/5/1991

Table 1.9-21

NRC Regulatory Guides Applicability to ESBWR

RG No.	Regulatory Guide Title	Appl. Rev.	Issued Date	ESBWR Appli-cable?	Comments
1.20	Comprehensive Vibration Assessment Program for Reactor Internals During Preoperational and Initial Startup Testing	2	05/1976	Yes	Performed During Power Ascension Testing
1.21	Measuring, Evaluating, and Reporting Radioactivity in Solid Wastes and Releases of Radioactive Materials in Liquid and Gaseous Effluents from Light-Water-Cooled Nuclear Power Plants	1	06/1974	Yes	
1.22	Periodic Testing of Protection System Actuation Functions	0	02/1972	Yes	
1.23	Onsite Meteorological Programs	0	02/1972	Yes	BSP. See also proposed Rev 1 published 04/1986 as ES 926-4.
1.24	Assumptions Used for Evaluating the Potential Radiological Consequences of a Pressurized Water Reactor Radioactive Gas Storage Tank Failure	0	03/1972	No	PWR only
1.25	Assumptions Used for Evaluating the Potential Radiological Consequences of a Fuel Handling Accident in the Fuel Handling and Storage Facility for Boiling and Pressurized Water Reactors	0	03/1972	No	Superseded by RG 1.183 for new plants.
1.26	Quality Group Classifications and Standards for Water-, Steam-, and Radioactive-Waste-Containing Components of Nuclear Power Plants	3	02/1976	—	See Table 1.9-21a for URD optimization comment and Table 1.9-21b

Table 1.9-21

NRC Regulatory Guides Applicability to ESBWR

RG No.	Regulatory Guide Title	Appl. Rev.	Issued Date	ESBWR Appli-cable?	Comments
1.27	Ultimate Heat Sink for Nuclear Power Plants	2	01/1976	Yes	URD intent – see Table 1.9-21a
1.28	Quality Assurance Program Requirements (Design and Construction)	3	08/1985	—	See Table 1.9-21b. See also proposed Rev 4 published 11/1992 as DG-1010.
1.29	Seismic Design Classification	3	09/1978	—	See Table 1.9-21a for intent comment and Table 1.9-21b
1.30	Quality Assurance Requirements for the Installation, Inspection, and Testing of Instrumentation and Electric Equipment	0	08/1972	—	See Table 1.9-21a for intent comment and Table 1.9-21b
1.31	Control of Ferrite Content in Stainless Steel Weld Metal	3	04/1978	Yes	
1.32	Criteria for Power Systems for Nuclear Power Plants	3	03/2004	Yes	URD intent – see Table 1.9-21a
1.33	Quality Assurance Program Requirements (Operation)	2	02/1978	—	COL. See also proposed Rev 3 published 11/1980 as RS 902-4.
1.34	Control of Electroslag Weld Properties	0	12/1972	Yes	

Table 1.9-21

NRC Regulatory Guides Applicability to ESBWR

RG No.	Regulatory Guide Title	Appl. Rev.	Issued Date	ESBWR Appli-cable?	Comments
1.35	Inservice Inspection of Ungrouted Tendons in Prestressed Concrete Containments	3	07/1990	No	Prestressed Concrete not used
1.35.1	Determining Prestressing Forces for Inspection of Prestressed Concrete Containments	0	07/1990	No	Prestressed Concrete not used
1.36	Nonmetallic Thermal Insulation for Austenitic Stainless Steel	0	02/1973	Yes	
1.37	Quality Assurance Requirements for Cleaning of Fluid Systems and Associated Components of Water-Cooled Nuclear Power Plants	0	03/1973	—	See Table 1.9-21b
1.38	Quality Assurance Requirements for Packaging, Shipping, Receiving, Storage, and Handling of Items for Water-Cooled Nuclear Power Plants	2	05/1977	—	See Table 1.9-21b
1.39	Housekeeping Requirements for Water-Cooled Nuclear Power Plants	2	09/1977	—	See Table 1.9-21b
1.40	Qualification Tests of Continuous-Duty Motors Installed Inside the Containment of Water-Cooled Nuclear Power Plants	0	03/1973	Yes	Applies to PCCS vent fans only
1.41	Preoperational Testing of Redundant On-site Electric Power Systems to Verify Proper Load Group Assignments	0	03/1973	Part	No safety-related Diesel Generators for ESBWR. Therefore, only DC portions are applicable. URD intent – see Table 1.9-21a

Table 1.9-21

NRC Regulatory Guides Applicability to ESBWR

RG No.	Regulatory Guide Title	Appl. Rev.	Issued Date	ESBWR Appli-cable?	Comments
1.43	Control of Stainless Steel Weld Cladding of Low-Alloy Steel Components	0	05/1973	Yes	Special testing requirements not applicable due to materials selected.
1.44	Control of the Use of Sensitized Stainless Steel	0	05/1973	Yes	
1.45	Reactor Coolant Pressure Boundary Leakage Detection Systems	0	05/1973	Yes	
1.47	Bypassed and Inoperable Status Indication for Nuclear Power Plant Safety Systems	0	05/1973	Yes	
1.49	Power Levels of Nuclear Power Plants	1	12/1973	Part	Power limitation outdated. Power multiplier of 1.02 still applicable.
1.50	Control of Preheat Temperature for Welding of Low-Alloy Steel	0	05/1973	Yes	
1.52	Design, Inspection, and Testing Criteria for Air Filtration and Adsorption Units of Post-Accident Engineered-Safety-Feature Atmosphere Cleanup Systems in Light-Water-Cooled Nuclear Power Plants	3	06/2001	Yes	Applies to Control Room HVAC. URD optimization – see Table 1.9-21a
1.53	Application of the Single-Failure Criterion to Safety Systems	2	11/2003	Yes	
1.54	Service Level I, II, and III Protective Coatings Applied to Nuclear Power Plants	1	07/2000	Yes	

Table 1.9-21

NRC Regulatory Guides Applicability to ESBWR

RG No.	Regulatory Guide Title	Appl. Rev.	Issued Date	ESBWR Appli-cable?	Comments
1.56	Maintenance of Water Purity in Boiling Water Reactors	1	07/1978	Yes	
1.57	Design Limits and Loading Combinations for Metal Primary Reactor Containment System Components	1	03/2007	Yes	
1.58	Qualification of Nuclear Power Plant Inspection, Examination, and Testing Personnel		Super-seded		See Table 1.9-21b. Withdrawn 07/31/1991
1.59	Design Basis Floods for Nuclear Power Plants	2	08/1977	Yes	Errata published 07/30/1980
1.60	Design Response Spectra for Seismic Design of Nuclear Power Plants	1	12/1973	Yes	
1.61	Damping Values for Seismic Design of Nuclear Power Plants	1	03/2007	Yes	
1.62	Manual Initiation of Protective Actions	0	10/1973	Yes	
1.63	Electric Penetration Assemblies in Containment Structures for Nuclear Power Plants	3	02/1987	Yes	
1.64	Quality Assurance Requirements for the Design of Nuclear Power Plants		Super-seded		See Table 1.9-21b. Withdrawn 07/31/1991
1.65	Materials and Inspections for Reactor Vessel Closure Studs	0	10/1973	Yes	
1.68	Initial Test Programs for Water-Cooled Reactor Power Plants	2	08/1978	Yes	

Table 1.9-21

NRC Regulatory Guides Applicability to ESBWR

RG No.	Regulatory Guide Title	Appl. Rev.	Issued Date	ESBWR Appli-cable?	Comments
1.68.1	Preoperational and Initial Startup Testing of Feedwater and Condensate Systems for Boiling Water Reactor Power Plants	1	01/1977	Yes	
1.68.2	Initial Startup Test Program to Demonstrate Remote Shutdown Capability for Water-Cooled Nuclear Power Plants	1	07/1978	Yes	
1.68.3	Preoperational Testing of Instrument and Control Air Systems	0	04/1982	Yes	
1.69	Concrete Radiation Shields for Nuclear Power Plants	0	12/1973	Yes	
1.70	Standard Format and Content of Safety Analysis Reports for Nuclear Power Plants, LWR Edition	3	11/1978	Yes	URD intent – see Table 1.9-21a
1.71	Welder Qualifications for Areas of Limited Accessibility	0	12/1973	—	COL
1.72	Spray Pond Piping Made From Fiberglass-Reinforced Thermosetting Resin	2	11/1978	No	
1.73	Qualification Tests of Electric Valve Operators Installed Inside the Containment of Nuclear Power Plants	0	01/1974	Yes	URD optimization – see Table 1.9-21a
1.74	Quality Assurance Terms and Definitions		Super-seded		See Table 1.9-21b. Withdrawn 09/21/1989
1.75	Criteria for Independence of Electrical Safety Systems	3	02/2005	Yes	URD intent – see Table 1.9-21a.

Table 1.9-21

NRC Regulatory Guides Applicability to ESBWR

RG No.	Regulatory Guide Title	Appl. Rev.	Issued Date	ESBWR Appli-cable?	Comments
1.76	Design Basis Tornado for Nuclear Power Plants	0	04/1974	Yes	URD optimization – see Table 1.9-21a
1.77	Assumptions Used for Evaluating a Control Rod Ejection Accident for Pressurized Water Reactors	0	05/1974	No	PWR Only. Superseded by RG 1.183 for new plants.
1.78	Evaluating the Habitability of a Nuclear Power Plant Control Room During a Postulated Hazardous Chemical Release	1	12/2001	—	COL
1.79	Preoperational Testing of Emergency Core Cooling Systems for Pressurized Water Reactors	1	09/1975	No	PWR only
1.81	Shared Emergency and Shutdown Electric Systems for Multi-Unit Nuclear Power Plants	1	01/1975	No	ESBWR is a single unit plant
1.82	Water Sources for Long-Term Recirculation Cooling Following a Loss-of-Coolant Accident	3	11/2003	No	No ECCS pumps in ESBWR
1.83	Inservice Inspection of Pressurized Water Reactor Steam Generator Tubes	1	07/1975	No	PWR only
1.84	Design, Fabrication and Materials Code Case Acceptability, ASME Section III	33	08/2005	Yes	Code Case N-782 is also applied as noted in Subsection 1.9.2 and Table 5.2-1.

Table 1.9-21

NRC Regulatory Guides Applicability to ESBWR

RG No.	Regulatory Guide Title	Appl. Rev.	Issued Date	ESBWR Appli-cable?	Comments
1.85	Materials Code Case Acceptability, ASME Section III, Division 1			No	Withdrawn 06/2003. Guidance incorporated into Rev. 32 of RG 1.84
1.86	Termination of Operating Licenses for Nuclear Reactors	0	06/1974	—	COL
1.87	Guidance for Construction of Class 1 Components in Elevated-Temperature Reactors (Supplement to ASME Section III Code Cases 1592, 1593, 1594, 1595, and 1596)	1	06/1975	No	
1.88	Collection, Storage, and Maintenance of Nuclear Power Plant Quality Assurance Records		Super-seded		See Table 1.9-21b. Withdrawn 07/31/1991
1.89	Environmental Qualification of Certain Electric Equipment Important to Safety for Nuclear Power Plants	1	06/1984	Yes	Source term requirements superseded by RG 1.183.
1.90	Inservice Inspection of Prestressed Concrete Containment Structures with Grouted Tendons	1	08/1977	No	Reinforced Concrete used
1.91	Evaluations of Explosions Postulated to Occur on Transportation Routes Near Nuclear Power Plants	1	02/1978	—	COL
1.92	Combining Modal Responses and Spatial Components in Seismic Response Analysis	2	07/2006	Yes	URD optimization – see Table 1.9-21a.

Table 1.9-21

NRC Regulatory Guides Applicability to ESBWR

RG No.	Regulatory Guide Title	Appl. Rev.	Issued Date	ESBWR Appli-cable?	Comments
1.93	Availability of Electric Power Sources	0	12/1974	Part	No safety-related diesels. Therefore, only DC portion (Item 5) is applicable. URD intent: see Table 1.9-21a. See also Subsection 3.1.2.8.
1.94	Quality Assurance Requirements for Installation, Inspection, and Testing of Structural Concrete and Structural Steel During the Construction Phase of Nuclear Power Plants	1	04/1976	—	COL. See Table 1.9-21b. See also proposed Rev 2 published 09/1979 as RS 908-5.
1.95	Protection of Nuclear Power Plant Control Room Operators Against an Accidental Chlorine Release	1	01/1977	No	Withdrawn 12/26/2001. Guidance incorporated in Rev. 1 of RG 1.78
1.96	Design of Main Steam Isolation Valve Leakage Control Systems for Boiling Water Reactor Nuclear Power Plants	1	06/1976	No	No MSIV Leakage Control System. URD optimization – see Table 1.9-21a

Table 1.9-21

NRC Regulatory Guides Applicability to ESBWR

RG No.	Regulatory Guide Title	Appl. Rev.	Issued Date	ESBWR Appli-cable?	Comments
1.97	Instrumentation for Light-Water-Cooled Nuclear Power Plants to Assess Plant and Environs Conditions During and Following an Accident	3	05/1983	Yes	Instrument Ranges Only
1.97	Criteria for Accident Monitoring Instrumentation for Nuclear Power Plants	4	06/2006	Yes	
1.98	Assumptions Used for Evaluating the Potential Radiological Consequences of a Radioactive Offgas System Failure in a Boiling Water Reactor	0	03/1976	No	Superseded by BTP ESTB 11-5 in SRP 11.3.
1.99	Radiation Embrittlement of Reactor Vessel Materials	2	05/1988	Yes	
1.100	Seismic Qualification of Electric and Mechanical Equipment for Nuclear Power Plants	2	06/1988	Yes	URD optimization – see Table 1.9-21a.
1.100	Seismic Qualification of Electrical and Active Mechanical Equipment and Functional Qualification of Active Mechanical Equipment for Nuclear Power Plants	3	09/2009	Yes	Rev 3 applies only for its endorsement of ASME QME-1-2007 otherwise Rev 2 applies.
1.101	Emergency Response Planning and Preparedness for Nuclear Power Reactors	5	06/2005	—	COL
1.102	Flood Protection for Nuclear Power Plants	1	09/1976	Yes	
1.105	Setpoints for Safety-Related Instrumentation	3	12/1999	Yes	

Table 1.9-21

NRC Regulatory Guides Applicability to ESBWR

RG No.	Regulatory Guide Title	Appl. Rev.	Issued Date	ESBWR Appli-cable?	Comments
1.106	Thermal Overload Protection for Electric Motors on Motor-Operated Valves	1	03/1977	No	ESBWR has no safety-related motor operated valves.
1.107	Qualifications for Cement Grouting for Prestressing Tendons in Containment Structures	1	02/1977	No	Reinforced Concrete used
1.108	Periodic Testing of Diesel Generator Units Used as Onsite Electric Power Systems at Nuclear Power Plants	1	08/1977	No	Withdrawn 8/5/1993. No safety-related Diesel Generators for ESBWR. URD intent – see Table 1.9-21a
1.109	Calculation of Annual Doses to Man from Routine Releases of Reactor Effluents for the Purpose of Evaluating Compliance with 10 CFR Part 50, Appendix I	1	10/1977	Yes	
1.110	Cost-Benefit Analysis for Radwaste Systems for Light-Water-Cooled Nuclear Power Reactors	0	03/1976	Yes	
1.111	Methods for Estimating Atmospheric Transport and Dispersion of Gaseous Effluents in Routine Releases from Light-Water-Cooled Reactors	1	07/1977	Yes	
1.112	Calculation of Releases of Radioactive Materials in Gaseous and Liquid Effluents from Light-Water-Cooled Power Reactors	0-R	05/1977	Yes	

Table 1.9-21

NRC Regulatory Guides Applicability to ESBWR

RG No.	Regulatory Guide Title	Appl. Rev.	Issued Date	ESBWR Appli-cable?	Comments
1.113	Estimating Aquatic Dispersion of Effluents from Accidental and Routine Reactor Releases for the Purpose of Implementing Appendix I	1	04/1977	—	COL
1.114	Guidance to Operators at the Controls and to Senior Operators in the Control Room of a Nuclear Power Unit	2	05/1989	—	COL
1.115	Protection Against Low-Trajectory Turbine Missiles	1	07/1977	Yes	
1.116	Quality Assurance Requirements for Installation, Inspection, and Testing of Mechanical Equipment and Systems	0-R	05/1977	—	See Table 1.9-21b
1.117	Tornado Design Classification	1	04/1978	Yes	
1.118	Periodic Testing of Electric Power and Protection Systems	3	04/1995	Yes	
1.120	Fire Protection Guidelines for Nuclear Power Plants	1	11/1977	No	Withdrawn 08/15/2001
1.121	Bases for Plugging Degraded PWR Steam Generator Tubes	0	08/1976	No	PWR only
1.122	Development of Floor Design Response Spectra for Seismic Design of Floor-Supported Equipment or Components	1	02/1978	Yes	URD optimization – see Table 1.9-21a
1.123	Quality Assurance Requirements for Control of Procurement of Items and Services for Nuclear Power Plants		Super-seded		See Table 1.9-21b. Withdrawn 07/31/1991
1.124	Service Limits and Loading Combinations for Class 1 Linear-Type Component Supports	1	01/1978	Yes	

Table 1.9-21

NRC Regulatory Guides Applicability to ESBWR

RG No.	Regulatory Guide Title	Appl. Rev.	Issued Date	ESBWR Appli-cable?	Comments
1.125	Physical Models for Design and Operation of Hydraulic Structures and Systems for Nuclear Power Plants	1	10/1978	Yes	
1.126	An Acceptable Model and Related Statistical Methods for the Analysis for Fuel Densification	1	03/1978	Yes	
1.127	Inspection of Water-Control Structures Associated with Nuclear Power Plants	1	03/1978	—	COL
1.128	Installation Design and Installation of Large Lead Storage Batteries for Nuclear Power Plants	1	10/1978	Yes	
1.129	Maintenance, Testing, and Replacement of Large Lead Storage Batteries for Nuclear Power Plants	1	02/1978	Yes	COL
1.130	Service Limits and Loading Combinations for Class 1 Plate-and-Shell-Type Component Supports	1	10/1978	Yes	
1.131	Qualification Tests of Electric Cables, Field Splices, and Connections for Light-Water-Cooled Nuclear Power Plants	0	08/1977	Yes	See also proposed Rev 1 published 08/1979 as RS 050-2.
1.132	Site Investigations for Foundations of Nuclear Power Plants	2	10/2003	—	COL
1.133	Loose-Part Detection Program for the Primary System of Light-Water-Cooled Reactors	1	05/1981	No	A loose-parts monitoring system is not included in the ESBWR design.

Table 1.9-21

NRC Regulatory Guides Applicability to ESBWR

RG No.	Regulatory Guide Title	Appl. Rev.	Issued Date	ESBWR Appli-cable?	Comments
1.134	Medical Evaluation of Licensed Personnel at Nuclear Power Plants	3	03/1998	—	COL
1.135	Normal Water Level and Discharge at Nuclear Power Plants	0	09/1977	Yes	
1.136	Design Limits, Loading Combinations, Materials, Construction, and Testing of Concrete Containments	3	03/2007	Yes	
1.137	Fuel-Oil Systems for Standby Diesel Generators	1	10/1979	No	No safety-related Diesel Generators for ESBWR. URD intent – see Table 1.9-21a
1.138	Laboratory Investigations of Soils and Rocks for Engineering Analysis and Design of Nuclear Power Plants	2	12/2003	—	COL
1.139	Guidance for Residual Heat Removal	0	05/1978	Yes	URD optimization – see Table 1.9-21a
1.140	Design, Inspection, and Testing Criteria for Air Filtration and Adsorption Units of Normal Atmosphere Cleanup Systems in Light-Water-Cooled Nuclear Power Plants	2	06/2001	Yes	
1.141	Containment Isolation Provisions for Fluid Systems	0	04/1978	Yes	
1.142	Safety-Related Concrete Structures for Nuclear Power Plants (Other than Reactor Vessels and Containments)	2	11/2001	Yes	

Table 1.9-21

NRC Regulatory Guides Applicability to ESBWR

RG No.	Regulatory Guide Title	Appl. Rev.	Issued Date	ESBWR Appli-cable?	Comments
1.143	Design Guidance for Radioactive Waste Management Systems, Structures, and Components Installed in Light-Water-Cooled Nuclear Power Plants	2	11/2001	Yes	
1.144	Auditing of Quality Assurance Programs for Nuclear Power Plants		Super-seded		See Table 1.9-21b. Withdrawn 07/31/1991
1.145	Atmospheric Dispersion Models for Potential Accident Consequence Assessments at Nuclear Power Plants	1	11/1982	—	COL. Reissued 02/1983 to correct page 1.145-7.
1.146	Qualification of Quality Assurance Program Audit Personnel for Nuclear Power Plants		Super-seded		See Table 1.9-21b. Withdrawn 07/31/1991
1.147	Inservice Inspection Code Case Acceptability, ASME Section XI, Division 1	14	08/2005	—	COL.
1.148	Functional Specification for Active Valve Assemblies in Systems Important to Safety in Nuclear Power Plants	0	03/1981	Yes	Subsumed by RG 1.100, Revision 3
1.149	Nuclear Power Plant Simulation Facilities for Use in Operator Training and License Examinations	3	10/2001	—	COL
1.150	Ultrasonic Testing of Reactor Vessel Welds During Preservice and Inservice Examinations	1	02/1983	Yes	
1.151	Instrument Sensing Lines	0	07/1983	Yes	
1.152	Criteria for Use of Computers in Safety Systems of Nuclear Power Plants	2	01/2006	Yes	

Table 1.9-21

NRC Regulatory Guides Applicability to ESBWR

RG No.	Regulatory Guide Title	Appl. Rev.	Issued Date	ESBWR Appli-cable?	Comments
1.153	Criteria for Safety Systems	1	06/1996	Yes	
1.154	Format and Content of Plant-Specific Pressurized Thermal Shock Safety Analysis Reports for Pressurized Water Reactors	0	01/1987	No	PWR only
1.155	Station Blackout	0	08/1988 reissue with corrected tables	Part	No emergency AC power required for ESBWR. Only coping analysis applicable. URD intent – see Table 1.9-21a
1.156	Environmental Qualification of Connection Assemblies for Nuclear Power Plants	0	11/1987	Yes	
1.157	Best-Estimate Calculations of Emergency Core Cooling System Performance	0	05/1989	Yes	
1.158	Qualification of Safety-Related Lead Storage Batteries for Nuclear Power Plants	0	02/1989	Yes	
1.159	Assuring the Availability of Funds for Decommissioning Nuclear Reactors	1	10/2003	—	COL
1.160	Monitoring the Effectiveness of Maintenance at Nuclear Power Plants	2	03/1997	—	COL
1.161	Evaluation of Reactor Pressure Vessels with Charpy Upper-Shelf Energy Less Than 50 Ft-Lb.	0	06/1995	No	

Table 1.9-21

NRC Regulatory Guides Applicability to ESBWR

RG No.	Regulatory Guide Title	Appl. Rev.	Issued Date	ESBWR Appli-cable?	Comments
1.162	Format and Content of Report for Thermal Annealing of Reactor Pressure Vessels	0	02/1996	—	COL
1.163	Performance-Based Containment Leak-Test Program	0	09/1995	Yes	
1.164	(Not yet issued)				
1.165	Identification and Characterization of Seismic Sources and Determination of Safe Shutdown Earthquake Ground Motion	0	03/1997	—	COL
1.166	Pre-Earthquake Planning and Immediate Nuclear Power Plant Operator Post-Earthquake Actions	0	03/1997	—	COL
1.167	Restart of a Nuclear Power Plant Shut Down by a Seismic Event	0	03/1997	No	
1.168	Verification, Validation, Reviews, and Audits for Digital Computer Software Used in Safety Systems of Nuclear Power Plants	1	02/2004	—	COL
1.169	Configuration Management Plans for Digital Computer Software Used in Safety Systems of Nuclear Power Plants	0	09/1997	—	COL
1.170	Software Test Documentation for Digital Computer Software Used in Safety Systems of Nuclear Power Plants	0	09/1997	—	COL
1.171	Software Unit Testing for Digital Computer Software Used in Safety Systems of Nuclear Power Plants	0	09/1997	—	COL
1.172	Software Requirements Specifications for Digital Computer Software Used in Safety Systems of Nuclear Power Plants	0	09/1997	—	COL

Table 1.9-21

NRC Regulatory Guides Applicability to ESBWR

RG No.	Regulatory Guide Title	Appl. Rev.	Issued Date	ESBWR Appli-cable?	Comments
1.173	Developing Software Life Cycle Processes for Digital Computer Software Used in Safety Systems of Nuclear Power Plants	0	09/1997	—	COL
1.174	An Approach for Using Probabilistic Risk Assessment in Risk-Informed Decisions On Plant-Specific Changes to the Licensing Basis	1	11/2002	Not directly	ESBWR is a new design. This approach can be used to evaluate design features.
1.175	An Approach for Plant-Specific, Risk-Informed Decisionmaking: Inservice Testing	0	08/1998	—	COL
1.176	An Approach for Plant-Specific, Risk-Informed Decisionmaking: Graded Quality Assurance	0	08/1998	—	COL
1.177	An Approach for Plant-Specific, Risk-Informed Decisionmaking: Technical Specifications	0	08/1998	—	COL
1.178	An Approach For Plant-Specific Risk-Informed Decisionmaking for Inservice Inspection of Piping	1	09/2003	—	COL
1.179	Standard Format and Content of License Termination Plans for Nuclear Power Reactors	0	01/1999	No	
1.180	Guidelines for Evaluating Electromagnetic and Radio-Frequency Interference in Safety-Related Instrumentation and Control Systems	1	10/2003	Yes	COL
1.181	Content of the Updated Final Safety Analysis Report in Accordance with 10 CFR 50.71(e)	0	09/1999	—	COL

Table 1.9-21

NRC Regulatory Guides Applicability to ESBWR

RG No.	Regulatory Guide Title	Appl. Rev.	Issued Date	ESBWR Appli-cable?	Comments
1.182	Assessing and Managing Risk Before Maintenance Activities at Nuclear Power Plants	0	05/2000	—	COL
1.183	Alternative Radiological Source Terms For Evaluating Design Basis Accidents at Nuclear Power Reactors	0	07/2000	Yes	Mandatory for new plants. Optional for existing facilities.
1.184	Decommissioning of Nuclear Power Reactors	0	07/2000	No	
1.185	Standard Format and Content for Post-Shutdown Decommissioning Activities Report	0	07/2000	No	
1.186	Guidance and Examples for Identifying 10 CFR 50.2 Design Bases	0	12/2000	—	COL
1.187	Guidance for Implementation of 10 CFR 50.59, Changes, Tests, and Experiments	0	11/2000	—	COL
1.188	Standard Format and Content for Applications to Renew Nuclear Power Plant Operating Licenses	1	09/2005	No	
1.189	Fire Protection for Operating Nuclear Power Plants	0	04/2001	Yes	See BTP SPLB 9.5-1 of SRP 9.5.1 for details of applicability.
1.190	Calculational and Dosimetry Methods for Determining Pressure Vessel Neutron Fluence	0	03/2001	Yes	
1.191	Fire Protection Program for Nuclear Power Plants During Decommissioning and Permanent Shutdown	0	05/2001	No	

Table 1.9-21

NRC Regulatory Guides Applicability to ESBWR

RG No.	Regulatory Guide Title	Appl. Rev.	Issued Date	ESBWR Appli-cable?	Comments
1.192	Operation and Maintenance Code Case Acceptability, ASME OM Code	0	06/2003	—	COL
1.193	ASME Code Cases Not Approved For Use	1	08/2005	Yes	
1.194	Atmospheric Relative Concentrations for Control Room Radiological Habitability Assessment at Nuclear Power Plants	0	06/2003	—	COL
1.195	Methods and Assumptions for Evaluating Radiological Consequences of Design Basis Accidents at Light-Water Nuclear Power Reactors	0	05/2003	No	Not applicable when using RG 1.183 alternate source terms
1.196	Control Room Habitability at Light-Water Nuclear Power Reactors	0	05/2003	Yes	
1.197	Demonstrating Control Room Envelope Integrity at Nuclear Power Reactors	0	05/2003	Yes	
1.198	Procedures and Criteria for Assessing Seismic Soil Liquefaction at Nuclear Power Plant Sites	0	11/2003	—	COL
1.199	Anchoring Components and Structural Supports in Concrete	0	11/2003	Yes	
1.200	An Approach for Determining the Technical Adequacy of Probabilistic Risk Assessment Results for Risk-Informed Activities	1	01/2007	No	Evaluated on a case-by-case basis

Table 1.9-21

NRC Regulatory Guides Applicability to ESBWR

RG No.	Regulatory Guide Title	Appl. Rev.	Issued Date	ESBWR Appli-cable?	Comments
1.201	Guidelines for Categorizing Structures, Systems, and Components in Nuclear Power Plants According to Their Safety Significance	1	05/2006	No	
1.202	Standard Format and Content of Decommissioning Cost Estimates for Nuclear Power Reactors	0	02/2005	No	
1.203	Transient and Accident Analysis Methods	0	12/2005	Yes	
1.204	Guidelines for Lightning Protection of Nuclear Power Plants	0	11/2005	Yes	
1.205	Risk-Informed, Performance-Based Fire Protection for Existing Light-Water Nuclear Power Plants	0	05/2006	No	
1.206	Combined License Applications for Nuclear Power Plants (LWR Edition)	0	06/2007	—	COL
1.207	Guidelines for Evaluating Fatigue Analyses Incorporating the Life Reduction of Metal Components Due to the Effects of Light-Water Reactor Environment for New Reactors	0	03/2007	Yes	With increase in fatigue usage limit
1.208	A Performance-Based Approach to Define the Site-Specific Earthquake Ground Motion	0	03/2007	No	
1.209	Guidelines for Environmental Qualification of Safety-Related Computer-Based Instrumentation and Control Systems in Nuclear Power Plants	0	03/2007	Yes	
4.7	General Site Suitability Criteria for Nuclear Power Stations	2	04/1998	—	COL

Table 1.9-21

NRC Regulatory Guides Applicability to ESBWR

RG No.	Regulatory Guide Title	Appl. Rev.	Issued Date	ESBWR Appli-cable?	Comments
4.15	Quality Assurance for Radiological Monitoring Programs (Normal Operations) – Effluent Streams and the Environment	1	02/1979	Yes	
4.21	Minimization of Contamination and Radioactive Waste Generation: Life-Cycle Planning	0	06/2008	Yes	
5.1	Serial Numbering of Fuel Assemblies for Light-Water-Cooled Nuclear Power Reactors	0	12/1972	No	Withdrawn 01/15/1998
5.7	Entry/Exit Control for Protected Areas, Vital Areas, and Material Access Areas	1	05/1980	Yes	
5.12	General Use of Locks in the Protection and Control of Facilities and Special Nuclear Materials	0	11/1973	Yes	
5.44	Perimeter Intrusion Alarm Systems	3	10/1997	Yes	
5.61	Intent and Scope of the Physical Protection Upgrade Rule Requirements for Fixed Sites	0	06/1980	Yes	Safeguards information provided
5.65	Vital Area Access Controls, Protection of Physical Security Equipment, and Key and Lock Controls	0	09/1986	Yes	
5.66	Access Authorization Program for Nuclear Power Plants	0	06/1991	Yes	Shared with COL
5.69	Guidance for the Application of the Radiological Sabotage Design-Basis Threat in the Design, Development, and Implementation of a Physical Security Program that meets 10 CFR 73.55 Requirements	0	08/2007	Yes	
7.10	Establishing Quality Assurance Programs for Packaging Used in Transport of Radioactive Material	2	03/2005	Yes	

Table 1.9-21

NRC Regulatory Guides Applicability to ESBWR

RG No.	Regulatory Guide Title	Appl. Rev.	Issued Date	ESBWR Appli-cable?	Comments
8.2	Guide for Administrative Practices in Radiation Monitoring	0	02/1973	—	COL
8.5	Criticality and Other Interior Evacuation Signals	1	03/1981	Yes	
8.7	Instructions for Recording and Reporting Occupational Radiation Dose Data	2	11/2005	—	COL
8.8	Information Relevant to Ensuring that Occupational Radiation Exposures at Nuclear Power Stations Will Be As Low As Is Reasonably Achievable	3	06/1978	Yes	See also second proposed Rev. 4 issued 05/1982 as OP 618-4.
8.9	Acceptable Concepts, Models, Equations, and Assumptions for a Bioassay Program	1	07/1993	—	COL
8.10	Operational Philosophy for Maintaining Occupational Radiation Exposures As Low As Is Reasonably Achievable	1-R	05/1977	Yes	
8.13	Instruction Concerning Prenatal Radiation Exposure	3	06/1999	—	COL
8.15	Acceptable Programs for Respiratory Protection	1	10/1999	—	COL
8.19	Occupational Radiation Dose Assessment in Light-Water Reactor Power Plants – Design Stage Man-Rem Estimates	1	06/1979	Yes	
8.20	Applications of Bioassay for I-125 and I-131	1	09/1979	—	COL
8.25	Air Sampling in the Workplace	1	06/1992	—	COL
8.26	Applications of Bioassay for Fission and Activation Products	0	09/1980	—	COL

Table 1.9-21

NRC Regulatory Guides Applicability to ESBWR

RG No.	Regulatory Guide Title	Appl. Rev.	Issued Date	ESBWR Appli-cable?	Comments
8.27	Radiation Protection Training for Personnel at Light-Water-Cooled Nuclear Power Plants	0	03/1981	—	COL
8.28	Audible-Alarm Dosimeters	0	08/1981	—	COL
8.29	Instruction Concerning Risks from Occupational Radiation Exposure	1	02/1996	—	COL
8.34	Monitoring Criteria and Methods to Calculate Occupational Radiation Doses	0	07/1992	—	COL
8.35	Planned Special Exposures	0	06/1992	—	COL
8.36	Radiation Dose to the Embryo/Fetus	0	07/1992	—	COL
8.38	Control of Access to High and Very High Radiation Areas in Nuclear Plants	1	05/2006	Yes	

Note for Table 1.9-21:

(1) COL (Combined License) – The responsibility for the item is with the licensee or plant designer, either during the COL phase or later during the life of the plant. (Subsection 1.9.4, Item 1.9-3-A)

Table 1.9-21a

EPRI Intent and Optimization Topics

Reg. Guide	Topic Type	URD* Section	Comment
1.6	Intent	4.12	Passive safety systems use DC-derived power systems that are designed with the required independence.
1.7	Optim	2.5.2	Use a passive plant-specific physically-based source term.
1.9	Intent	4.13	Passive safety systems do not require diesel generators.
1.13	Intent	4.14	ESBWR complies with spent fuel storage facility requirements by keeping spent fuel covered with a loss of AC power for 72 hours.
1.26	Optim	2.3.1.2 (4)	The Main Steamline downstream of the seismic interface restraint is to be considered Seismic Category II and Quality Group B.
1.27	Intent	4.15.3	Passive decay heat removal systems provide the ultimate heat sink function so a separate reservoir is not required.
1.29	Optim	2.3.1.2 (4)	The Main Steamline downstream of the seismic interface restraint is to be considered Seismic Category II and Quality Group B.
1.30	Intent	4.16	AC power systems quality assurance requirements are consistent with design requirements in 10 CFR 50 Appendix B.
1.32	Intent	4.17	Safety-related DC power sources are provided to support passive core cooling and containment integrity safety functions. No offsite or diesel-generator-derived AC power is required for 72 hours.
1.41	Intent	4.18	Safety-related DC-derived power load groups will be tested. Minimal safety-related (inverter-derived) AC power testing is required.
1.52	Optim	2.5.2	Use of a passive plant-specific physically-based source term eliminates the need for additional systems.
1.70	Intent	4.19.3	Safety analysis reports will be provided that describe the design in a similar scope.
1.73	Optim	2.5.2	Use a passive plant-specific physically-based source term.

Table 1.9-21a

EPRI Intent and Optimization Topics

Reg. Guide	Topic Type	URD* Section	Comment
1.75	Intent	4.20.3	Safe shutdown relies only upon DC-derived power and meets the design requirements for physical independence.
1.76	Optim	2.1.2.2	Basis is from National Severe Storms Forecast Center (NSSFC) for a 147.5 m/s (330 mph) tornado.
1.92	Optim	2.1.1.2	Revise analysis method to permit algebraic combination of high frequency modes for vibratory loads with significant high frequency input above 100 Hz or f_{ZPA} as defined in RG 1.92 Figures 1, 2 and 3. Reference to OBE provisions deleted.
1.93	Intent	4.22	The ESBWR is designed to shut down safely without reliance on offsite or diesel-generator-derived AC power.
1.96	Optim	2.3.1.2	Leakage control not required.
1.96	Optim	2.5.2	Use a passive plant-specific physically-based source term.
1.100	Optim	2.1.1.2	Revise for equipment to remain functional for "continued operation of the plant" and for OBE classification.
1.108	Intent	4.23	The ESBWR is designed with passive safety systems to maintain core cooling and containment integrity without reliance on offsite or diesel-generator-derived AC power.
1.122	Optim	2.1.1.2	Revised to allow spectral shifting techniques as an alternative.
1.137	Intent	4.24	The ESBWR is designed to shut down safely without reliance on offsite or diesel-generator-derived AC power.

Table 1.9-21a

EPRI Intent and Optimization Topics

Reg. Guide	Topic Type	URD* Section	Comment
1.139	Optim	2.5.6	Passive decay heat removal system without Cold Shutdown requirement. The NRC, in a June 30, 1994 staff requirements memorandum (SRM), has approved the position proposed in SECY-94-084, "Policy and Technical Issues Associated with the Regulatory Treatment of Non-Safety Systems in Passive Plant Designs." This position accepts 215.6°C (420°F) or below, rather than the cold shutdown specified in RG 1.139, "Guidance for Residual Heat Removal," as the safe stable condition that the passive decay heat removal system must be capable of achieving and maintaining following non-LOCA events.
1.155	Intent	4.25	The ESBWR is designed to shut down safely without reliance on offsite or diesel-generator-derived AC power for 72 hours, which exceeds station blackout requirements.

* Volume III, Chapter 1, Appendix B of Reference 1.9-1.

Table 1.9-21b

ESBWR Compliance with Quality Related Regulatory Guides

Regulatory Guide No.	Revision	Comments
1.8	3	Not applicable to GEH QA Program
1.21	1	Not applicable to GEH QA Program
1.26	3	Except for the alternate Quality Group Classification for the Hydraulic Control Unit per Note 8 of Table 3.2-1.
1.28	3	Except for NRC accepted alternate positions as documented in Table 2-1 of Reference 1.9-2.
1.29	3	Except for Main Steam Piping from seismic interface restraint to turbine stop valves as identified in Table 3.2-1 and Figure 3.2-1.
1.30	0	No exceptions.
1.33	2	Not applicable to GEH QA Program
1.37	0	Except for NRC accepted alternate positions as documented in Table 2-1 of Reference 1.9-2.
1.38	2	Except for NRC accepted alternate positions as documented in Table 2-1 of Reference 1.9-2.
1.39	2	No exceptions.
1.54	1	No exceptions.
1.58	withdrawn	Superseded by Reg. Guide 1.28, Rev. 3.
1.64	withdrawn	Superseded by Reg. Guide 1.28, Rev. 3, except for NRC accepted alternate positions as documented in Table 2-1 of Reference 1.9-2.
1.74	withdrawn	Superseded by Reg. Guide 1.28, Rev. 3.
1.88	withdrawn	Superseded by Reg. Guide 1.28, Rev. 3.
1.94	1	Not applicable to GEH QA Program
1.97	4	No exceptions.
1.116	0-R	No exceptions.
1.123	withdrawn	Superseded by Reg. Guide 1.28, Rev. 3.
1.143	2	No exceptions.
1.144	withdrawn	Superseded by Reg. Guide 1.28, Rev. 3.

Table 1.9-21b

ESBWR Compliance with Quality Related Regulatory Guides

Regulatory Guide No.	Revision	Comments
1.146	withdrawn	Superseded by Reg. Guide 1.28, Rev. 3.
1.152	2	No exceptions.
1.155, Regulatory Position 3.5 and Appendix A	0	No exceptions.
1.168	1	No exceptions.
1.169	0	No exceptions.
1.170	0	No exceptions.
1.171	0	No exceptions.
1.172	0	No exceptions.
1.173	0	No exceptions.
1.176	0	Not applicable to GEH QA Program
1.189, Regulatory Position 1.7	0	No exceptions.
4.15	1	No exceptions.
7.10	2	No exceptions.

Table 1.9-22

Industrial Codes and Standards[1] Applicable to ESBWR

Code or Standard Number	Year	Title
Acoustical Society of America (ASA)		
S3.4-1980	1986 (R 2003)	Procedure for Computation of Loudness of Noise
S3.5-1997	1997 (R 2002)	Methods of Calculation of the Speech Intelligibility Index
Air-Conditioning and Refrigeration Institute (ARI)		
410-01	2001	Force-circulation Air-cooling and Air-heating Coils
430-99	1999	Central Station Air Handling Units
450-2007	2007	Water-Cooled Refrigerant Condensers, Remote Type
550/590-03	2003	Water Chilling Packages Using the Vapor Compression Cycle
575-94	1994	Method of Measuring Machinery Sound Within an Equipment Space
Air Movement and Control Association (AMCA)		
99-03	2003	Standards Handbook
200-95	1995 (R 2000)	Air Systems
201-02	2002	Fans and Systems
202-98	1998	Troubleshooting
203-90	1990	Field Performance Measurements of Fan Systems
210-99	1999	Laboratory Methods of Testing Fans for Aerodynamic Performance Rating – including Addendum A, August 21, 2001
301	1990	Methods for Calculating Fan Sound Ratings from Laboratory Test Data
302	1973	Application of Sone Ratings for Non-Ducted Air Moving Devices
303-79	1979	Application of Sound Power Level Ratings for Fans
410-96	1996	Recommended Safety Practices for Users and Installers of Industrial and Commercial Fans
500-D-07	2007	Laboratory Methods of Testing Dampers for Rating
500-L-07	2007	Laboratory Methods of Testing Louvers for Rating
502-06	2006	Damper Application Manual for Heating, Ventilating, and Air Conditioning
503-03	2003	Fire, Ceiling (Radiation), Smoke and Fire/Smoke Dampers Application Manual
801-01	2001	Industrial Process/ Power Generation Fans: Specification Guidelines

[1] The listing of a code or standard does not necessarily mean that it is applicable in its entirety.

Table 1.9-22

Industrial Codes and Standards[1] Applicable to ESBWR

Code or Standard Number	Year	Title
American Association of State Highway and Transportation Officials (AASHTO)		
LTS-2	1985	Standard Specifications for Structural Supports for Highway Signs, Luminaries, and Traffic Signals
LTS-4	2001	Standard Specifications for Structural Supports for Highway Signs, Luminaries, and Traffic Signals
American Concrete Institute (ACI)		
211.1-91	1991 (R 2002)	Standard Practice for Selecting Proportions for Normal, Heavy Weight, and Mass Concrete
212.3R-04	2004	Chemical Admixtures for Concrete
212.4R-04	2004	Guide for the Use of High-Range Water-Reducing Admixtures (Superplasticizers) in Concrete
214R-02	2002	Evaluation of Strength Test Results of Concrete
301-05	2005	Specifications for Structural Concrete
304R-00	2000	Guide for Measuring, Mixing, Transporting, and Placing Concrete
305R-99	1999	Hot Weather Concreting
306.1-90	1990 (R 2002)	Standard Specification for Cold Weather Concreting
307/307R	1998	Design and Construction of Reinforced Concrete Chimneys and Commentary
308.1-98	1998	Standard Specification for Curing Concrete
309R-05	2005	Guide for Consolidation of Concrete
311.4R-00	2000	Guide for Concrete Inspection
311.5-04	2004	Guide for Concrete Plant Inspection and Testing of Ready-Mixed Concrete
315-99	1999	Details and Detailing of Concrete Reinforcement
318-05	2005	Building Code Requirements for Structural Concrete and Commentary
347-04	2004	Guide to Formwork for Concrete
349-01/349R-01	2001	Code Requirements for Nuclear Safety-Related Concrete Structures and Commentary
359-95	1995	Code for Concrete Reactor Vessels and Containments (See ASME Boiler & Pressure Vessel Code, Section III NCA and D2)
515.1R-79	1979	A Guide to the Use of Waterproofing, Dampproofing, Protective, and Decorative Barrier Systems for Concrete (Revised 1985)
530-02	2002	Building Code Requirements for Masonry Structures (ACI 530-02/ASCE 5-02/TMSV402-02)

Table 1.9-22

Industrial Codes and Standards[1] Applicable to ESBWR

Code or Standard Number	Year	Title
American Institute of Steel Construction (AISC)		
325-01	2001	Manual of Steel Construction: Load and Resistance Factor Design, 3rd Edition
360-05	2005	Specification for Structural Steel Buildings (Also endorsed by ANSI)
M016-89	1989	Manual of Steel Construction Allowable Stress Design, 9th Edition
N690-94	1994 (R 2004)	Specification for the Design, Fabrication, and Erection of Steel Safety-Related Structures for Nuclear Facilities – Supplement 2: October 2004
American Iron and Steel Institute (AISI)		
CF02-1	2002	Cold-Formed Steel Framing Design Guide (Latest edition based on the 2001 edition and 2004 supplement of the AISI Specification for the Design of Cold-Formed Steel Structural Members)
SG02-1 and SG02-2	2001	North American Specification for the Design of Cold-Formed Steel Structural Members, and Commentary
SG05-1e	2004	Supplement 2004 to the North American Specification for the Design of Cold-Formed Steel Structural Members, 2001 Edition
American National Standards Institute (ANSI)		
C37.32-1990	1990	Switchgear High-Voltage Air Switches, Bus Supports, and Switch Accessories - Schedules of Preferred Ratings, Manufacturing Specifications, and Application Guide – Revised and Re-designated as ANSI/NEMA C37.32-1996. See IEEE C37.32-2002.
C37.46-1981	1981	Specification for Power Fuses and Fuse Disconnecting Switches (See NEMA C37.46-2000)
C37.50-1989	1989	Switchgear – Low-Voltage AC Power Circuit Breakers Used in Enclosures – Test Procedures (See NEMA C37.50-1989)
C37.51-2003	2003	Switchgear – Metal Enclosed Low-Voltage AC Power Circuit Breaker Switchgear Assemblies – Conformance Test Procedures (See NEMA C37.51-2003)
C39.1-1981	1981 (R 1992)	Electrical Analog Indicating Instruments
C50.10-1990	1990	General Requirements for Synchronous Machines
C50.13	1989	Standard for Rotating Electrical Machinery – Cylindrical-Rotor Synchronous Generators
CGA G-7.1	2004	Commodity Specification for Air
ANSI/HPS N13.1-1999	1999	Sampling and Monitoring Releases of Airborne Radioactive Substances from the Stacks and Ducts of Nuclear Facilities
N14.6-1993	1993	Radioactive Materials - Special Lifting Devices for Shipping Containers Weighing 10,000 Pounds (4500 kg) or More

Table 1.9-22

Industrial Codes and Standards[1] Applicable to ESBWR

Code or Standard Number	Year	Title
N42.18-2004	2004	Specification and Performance of On-Site Instrumentation for Continuously Monitoring Radioactivity in Effluents (Redesignation of N13.10-1974 and Reaffirmation of N42.18-1980)
N45.4	1972	Leakage-Rate Testing of Containment Structures for Nuclear Reactors
N320	1979	Performance Specifications for Reactor Emergency Radiological Monitoring Instrumentation (Also under IEEE)
N271	1976	Containment Isolation Provisions for Fluid Systems
N323	1978	Radiation Protection Instrumentation Test and Calibration (Also under IEEE)
N323A	1997	Radiation Protection Instrumentation Test and Calibration, Portable Survey Instruments (Also under IEEE)
American Nuclear Insurers (ANI)		
Manual	1976	Basic Fire Protection for Nuclear Power Plants
—	—	Standard Method of Fire Test of Cable and Pipe Penetration Fire Stops
American Nuclear Society (ANS)		
2.2-2002	2002	Earthquake Instrumentation Criteria for Nuclear Power Plants
2.3-1983	1983	Standard for Estimating Tornado and Extreme Wind Characteristics at Nuclear Power Sites
2.7-1982	1982	Guidelines for Assessing Capability for Surface Faulting at Nuclear Power Sites
2.8	1992	Determining Design Basis Flooding at Power Reactor Sites
2.10-1979	1979	Guidelines for Retrieval, Review, Processing and Evaluation of Records Obtained from Seismic Instrumentation
2.11-1978	1978 (R 1989)	Guidelines for Evaluating Site-Related Geotechnical Parameters at Nuclear Power Sites
2.12-1978	1978	Guidelines for Combining Natural and External Man-Made Hazards at Power Reactor Sites
3.2-1994	1994 (R 1999)	Administrative Controls and Quality Assurance for the Operational Phase of Nuclear Power Plants
3.5-1998	1998	Nuclear Power Plant Simulators for Use in Operator Training and Examination
4.5-1980	1980 (R 1988)	Criteria for Accident Monitoring Functions in Light-Water-Cooled Reactors
5.1	1994	Decay Heat Power in LWRs
6.4	2006	Nuclear Analysis and Design of Concrete Radiation Shielding for Nuclear Power Plants

Table 1.9-22

Industrial Codes and Standards[1] Applicable to ESBWR

Code or Standard Number	Year	Title
6.4.2	1985 (R 2004)	Specification for Radiation Shielding Materials (Note: A 2006 revision exists)
10.4-1987	1987 (R 1998)	Guidelines for the Verification and Validation of Scientific and Engineering Computer Programs for the Nuclear Industry
18.1-1999	1999	Radioactive Source Term for Normal Operation of Light Water Reactors
40.37-1993	1993	Mobile Radioactive Waste Processing Systems (withdrawn 2003)
55.1-1992	1992 (R 2000)	Solid Radioactive Waste Processing System for Light-Water-Cooled Reactor Plants
55.4-1993	1993 (R 1999)	Gaseous Radioactive Waste Processing Systems for Light Water Reactor Plants
55.6-1993	1993 (R 1999)	Liquid Radioactive Waste Processing System for Light Water Reactor Plants
56.2-1984	1984 (R 1989)	Containment Isolation Provisions for Fluid Systems After a LOCA
56.3-1977	1977 (R 1987)	Overpressure Protection of Low Pressure Systems Connected to the Reactor Coolant Pressure Boundary
56.4-1983	1983 (R 1988)	Pressure and Temperature Transient Analysis for Light Water Reactors
56.5-1979	1979 (R 1987)	PWR and BWR Containment Spray System Design Criteria
56.7-1978	1978 (R 1987)	Boiling Water Reactor Containment Ventilation Systems
56.8-2002	2002	Containment System Leakage Testing Requirements
56.10-1982	1982 (R 1987)	Subcompartment Pressure and Temperature Transient Analysis in Light Water Reactors
56.11-1988	1988	Design Criteria for Protection Against the Effects of Compartment Flooding in Light Water Reactor Plants
57.1-1992	1992 (R 1998)	Design Requirements for Light Water Reactor Fuel Handling Systems
57.2-1983	1983	Design Requirements for Light Water Reactor Spent Fuel Storage Facilities at Nuclear Power Plants
57.3-1983	1983	Design Requirements for New Fuel Storage Facilities at Light Water Reactor Plants
57.5-1996	1996	Light Water Reactor Fuel Assembly Mechanical Design and Evaluation
58.2-1988	1988	Design Basis for Protection of Light Water Nuclear Power Plants Against Effects of Postulated Pipe Rupture
58.3-1992	1992 (R 1998)	Physical Protection for Nuclear Safety-Related Systems and Components
58.4-1979	1979	Criteria for Technical Specifications for Nuclear Power Stations

Table 1.9-22

Industrial Codes and Standards[1] Applicable to ESBWR

Code or Standard Number	Year	Title
58.6-1996	1996 (R 2001)	Criteria for Remote Shutdown of Light Water Reactors
58.8-1994	1994 (R 2001)	Time Response Design Criteria for Safety-Related Operator Actions
58.9-1981	1981 (R 2002)	Single Failure Criteria for Light Water Reactor Safety-Related Fluid Systems
58.11-1995	1995 (R 2002)	Design Criteria for Safe Shutdown Following Selected Design Basis Events in Light Water Reactors
58.21-2003	2003	External Events in PRA Methodology
59.2-1985	1985	Safety Criteria for HVAC Systems Located Outside Primary Containment
59.51-1997	1997	Fuel Oil Systems for Safety-Related Emergency Diesel-Generators
59.52-1998	1998	Lubricating Oil Systems for Safety-Related Emergency Diesel-Generators
HPSSC-6.8.1	1981	Location and Design Criteria for Area Radiation Monitoring Systems for Light Water Nuclear Reactors
American Petroleum Institute (API)		
610-04	2004	Centrifugal Pumps Petroleum, Petrochemical, and Natural Gas Industries Tenth Edition: ISO 13709 Adoption
620-02	2002	Design and Construction of Large, Welded, Low-Pressure Storage Tanks – Tenth Edition
650-98	1998	Welded Steel Tanks for Oil Storage – Tenth Edition
661-02	2002	Air Cooled Heat Exchangers for General Refinery Service, Fifth Edition: ISO 13706: 2000/ISO 13706 Adoption
674-95	1995	Positive Displacement Pumps-Reciprocating
675-94	1994 (R 2000)	Positive Displacement Pumps-Controlled Volume
American Society for Quality (ASQ)		
C1-1996	1996	Specifications of General Requirements for a Quality Program
American Society of Civil Engineers (ASCE)		
4-98	1998 ©2000	Seismic Analysis of Safety-Related Nuclear Structures and Commentary
7-02	2002	Minimum Design Loads for Buildings and Other Structures
43-05	2005	Seismic Design Criteria for Structures, Systems, and Components in Nuclear Facilities
American Society of Heating, Refrigerating and Air-Conditioning Engineers, Inc. (ASHRAE)		
15-2007	2007	Safety Standard for Refrigeration Systems
30-1995	1995	Methods of Testing Liquid-Chilling Packages

Table 1.9-22

Industrial Codes and Standards[1] Applicable to ESBWR

Code or Standard Number	Year	Title
33-2000	2000	Methods of Testing Forced Circulation Air Cooling and Air Heating Coils
51-1999	1999	Laboratory Methods of Testing Fans for Aerodynamic Performance Rating
52-1976	1976	Testing Air-Cleaning Devices Used in General Ventilation for Removing Particulate Matter
52.1-1992	1992	Gravimetric and Dust-Spot Procedures for Testing Air-Cleaning Devices Used in General Ventilation for Removing Particulate Matter
52.2-2007	2007	Method of Testing General Ventilation Air-Cleaning Devices for Removal Efficiency by Particle Size
62.1-2007	2007	Ventilation for Acceptable Indoor Air Quality
American Society of Mechanical Engineers (ASME)		
A17.1-2004	2004	Safety Code for Elevators and Escalators
AG-1-2003	2003	Code on Nuclear Air and Gas Treatment – including Addenda
B1.20.1-1983	1983 (R 2001)	Pipe Threads, General Purpose (Inch)
B16.5-2003	2003	Pipe Flanges and Flanged Fittings NPS ½ Through NPS 24 Metric/Inch Standard – Revision of ASME B16.5-1996
B16.10-2000	2000 (R 2003)	Face-to-Face and End-to-End Dimension of Valves
B16.11-2005	2005	Forged Steel Fittings, Socket-Welding and Threaded
B16.25-2003	2003	Buttwelding Ends
B16.34-1996	1996	Valves – Flanged, Threaded and Welding End
B16.42-1998	1998	Ductile Iron Pipe Flanges and Flanged Fittings, Classes 150 and 300
B19.1	1995	Safety Standard for Air Compressor Systems
B30.2-2001	2001	Overhead and Gantry Cranes (Top Running Bridge, Single or Multiple Girder, Top Running Trolley Hoist)
B30.9-2003	2003	Slings
B30.10-1999	1999	Hooks
B30.11-1998	1998	Monorail and Underhung Cranes – Addenda A – July 15, 1999
B30.16-2003	2003	Overhead Hoists (Underhung)
B31.1-2004	2004	Power Piping
B31.3-2002	2002	Process Piping
B31.5-2001	2001	Refrigeration Piping and Heat Transfer Components
B36.10-2004	2004	Welded and Seamless Wrought Steel Pipe

Table 1.9-22

Industrial Codes and Standards[1] Applicable to ESBWR

Code or Standard Number	Year	Title
B36.19M-2004	2004	Stainless Steel Pipe
B96.1-1999	1999	Welded Aluminum-Alloy Storage Tanks
MFC-3M-1989	1989 (R 1995)	Measurement of Fluid Flow in Pipes using Orifice, Nozzle and Venturi – Errata – September 1990
N45.2-1977	1977	QA Program Requirements for Nuclear Facilities (ANSI/AICHE N46.2-1977 see also NQA-1 and NQA-2)
N45.2.1-1980	1980	Cleaning of Fluid Systems and Associated Components for Nuclear Power Plants (See also NQA-1 and NQA-2)
N45.2.2-1978	1978	Packaging, Shipping, Receiving, Storage, and Handling of Items for Nuclear Power Plants, QA Cases – December 1978 (See also NQA-1 and NQA-2)
N45.2.6-1978	1978	Qualifications of Inspection, Examination and Testing Personnel for Nuclear Power Plants (See also NQA-1 and NQA-2)
N45.2.9-1979	1979	Requirements for the Collection, Storage, and Maintenance of QA Records for Nuclear Power Plants (See also NQA-1 and NQA-2)
NOG-1-2004	2004	Rules for Construction of Overhead and Gantry Cranes (Top Running Bridge, Multiple Girder)
NQA-1-1983	1983	Quality Assurance Program Requirements for Nuclear Facilities (Note: more recent versions exist)
NQA-1a-1983	1983	Addenda to ANSI/ASME NQA-1-1983 Edition, Quality Assurance Requirements for Nuclear Facility Applications (Note: more recent versions exist)
NQA-1-1994 Subpart 2.7	1994	Quality Assurance Program Requirements for Nuclear Facility Applications, Subpart 2.7, Quality Assurance Requirements of Computer Software for Nuclear Facility Applications (Note: more recent versions exist)
NQA-2-1983	1983	Quality Assurance Requirements for Nuclear Facility Applications (Note: more recent versions exist)
PTC 6-1996	1996	Steam Turbines
PTC 6A-2000	2000	Appendix A to PT6, the Test Code for Steam Turbines
PTC 8.2-1990	1990	Centrifugal Pumps
PTC 17-1973	1973 (R 2003)	Reciprocating Internal-Combustion Engines
PTC 23-2003	2003	Atmospheric Water Cooling Equipment
PTC 25-2001	2001	Pressure Relief Devices
PTC 26-1962	1962	Speed Governing Systems for Internal Combustion Engine Generator Units
RA-S-2002	2002	Standard for Probabilistic Risk Assessment for Nuclear Power Plant Applications

Table 1.9-22

Industrial Codes and Standards[1] Applicable to ESBWR

Code or Standard Number	Year	Title
RA-Sa-2003	2003	Standard for Probabilistic Risk Assessment for Nuclear Power Plant Applications, Addendum A to ASME RA-S-2002
RA-Sb-2005	2005	Standard for Probabilistic Risk Assessment for Nuclear Power Plant Applications, Addendum B to ASME RA-S-2002
TDP-1-1998	1998	Recommended Practices for the Prevention of Water Damage to Steam Turbines Used for Electric Power Generation (Fossil)
TDP-2-1985	1985	Recommended Practices for the Prevention of Water Damage to Steam Turbines Used for Electric Power Generation (Nuclear)
QME-1-2007	2007	Qualification of Active Mechanical Equipment Used in Nuclear Power Plants
BPVC Sec I	2001 including Addenda through 2003	Boiler & Pressure Vessel Code (BPVC) Section I, Rules for Construction of Power Boilers
BPVC Sec II	2001 including Addenda through 2003	BPVC Section II, Materials Part A Ferrous Material Specifications Part B Non-Ferrous Material Specifications Part C Specifications for Welding Rods, Electrodes, and Filler Metals Part D Properties
BPVC Sec II	2004	Note: The 2004 edition of BPVC Section II is only to be used in connection with the use of the 2004 edition of BPVC Section III Division 1 NCA, NE and Division 2 NCA, CC. BPVC Section II, Materials Part A Ferrous Material Specifications Part B Non-Ferrous Material Specifications Part C Specifications for Welding Rods, Electrodes, and Filler Metals Part D Properties
[*BPVC Sec III*]*	[*2004*]*	[*BPVC Section III, Rules for Construction of Nuclear Facility Components* *Division 1: NCA, NE* *Division 2: CC, NCA* *Code for Concrete Containments*]*

Table 1.9-22

Industrial Codes and Standards[1] Applicable to ESBWR

Code or Standard Number	Year	Title
[*BPVC Sec III*]*	[*2001 including Addenda through 2003*]*	[*BPVC Section III, Rules for Construction of Nuclear Facility Components* *Division 1: NCA, NB, NC, ND, NF, NG* *Weld Leg Dimensions: The 1989 Edition, with no Addenda, is used when applying paragraph NB-3683.4(c)(1), or applying Footnote 11 to Figure NC-3673.2(b)-1, or applying Figure ND-3673.2(b)-1 to weld leg dimensioning.* *Seismic Design of Piping: The 1992 Edition with 1993 Addenda is used when applying Articles NB-3200, NB–3600, NC–3600, and ND–3600 (Class 1, 2, 3 Piping and Components) for seismic design of piping in lieu of later ASME Code, Section III, editions and addenda.* *Note: All limitations and modifications specified in 10 CFR 50.55a(b)(1) are met.*]*
BPVC Sec V	2001 including Addenda through 2003	BPVC Section V: Nondestructive Examination
BPVC Sec VIII	2001 including Addenda through 2003	BPVC Section VIII: Rules for Construction of Pressure Vessels Div. 1 Div. 2 Alternative Rules
BPVC Sec IX	2001 including Addenda through 2003	BPVC Section IX, Welding and Brazing Qualifications
BPVC Sec XI	2001 including Addenda through 2003	BPVC Section XI, Rules for Inservice Inspection of Nuclear Power Plant Components
OM Code	2001 including Addenda through 2003	Code for Operation and Maintenance of Nuclear Power Plants
OM-S/G-1990	1990	Standards and Guides for Operation and Maintenance of Nuclear Power Plants (Note: more recent versions exist)
ASME Steam Tables	1967	Thermodynamic and Transport Properties of Steam
ASTM International (formerly American Society for Testing and Materials)		
A36/A36M-05	2005	Standard Specification for Carbon Structural Steel
A106/A106M-06a	2006	Standard Specification for Seamless Carbon Steel Pipe for High-Temperature Service
A126-04	2004	Standard Specification for Gray Iron Castings for Valves, Flanges, and Pipe Fittings

Table 1.9-22

Industrial Codes and Standards[1] Applicable to ESBWR

Code or Standard Number	Year	Title
A167-99	1999 (R 2004)	Standard Specification for Stainless and Heat-Resisting Chromium-Nickel Steel Plate, Sheet, and Strip
A182/A182M-08	2008	Specification for Forged or Rolled Alloy and Stainless Steel Pipe Flanges, Forged Fittings, and Valves and Parts for High-Temperature Service
A213/A213M-08	2008	Standard Specification for Seamless Ferritic and Austenitic Alloy-Steel Boiler, Superheater, and Heat-Exchanger Tubes
A240/A240M-07e1	2007	Standard Specification for Chromium and Chromium-Nickel Stainless Steel Plate, Sheet, and Strip for Pressure Vessels and for General Applications
A262-02a	2002 (R 2008)	Standard Practices for Detecting Susceptibility to Intergranular Attack in Austenitic Stainless Steels
A307-07b	2007	Standard Specification for Carbon Steel Bolts and Studs, 60 000 PSI Tensile Strength
A312/A312M-08	2008	Standard Specification for Seamless, Welded, and Heavily Cold Worked Austenitic Stainless Steel Pipes
A325-07a	2007	Standard Specification for Structural Bolts, Steel, Heat Treated, 120/105 ksi Minimum Tensile Strength
A351/A351M-06	2006	Standard Specification for Castings, Austenitic, for Pressure-Containing Parts
A370-08a	2008	Standard Test Methods and Definitions for Mechanical Testing of Steel Products
A380-06	2006	Standard Practice for Cleaning, Descaling, and Passivation of Stainless Steel Parts, Equipment and Systems
A395/A395M-99	1999 (R 2004)	Standard Specification for Ferritic Ductile Iron Pressure-Retaining Castings for Use at Elevated Temperatures
A479A479M-06a	2006	Standard Specification for Stainless Steel Bars and Shapes for Use in Boilers and Other Pressure Vessels
A490-08a	2008	Standard Specification for Structural Bolts, Alloy Steel, Heat Treated, 150 ksi Minimum Tensile Strength
A500/A500M-07	2007	Standard Specification for Cold-Formed Welded and Seamless Carbon Steel Structural Tubing in Rounds and Shapes
A513-07	2007	Standard Specification for Electric-Resistance-Welded Carbon and Alloy Steel Mechanical Tubing
A516/A516M-06	2006	Standard Specification for Pressure Vessel Plates, Carbon Steel, for Moderate- and Lower-Temperature Service
A519-06	2006	Standard Specification for Seamless Carbon and Alloy Steel Mechanical Tubing
A530/A530M-04a	2004	Standard Specification for General Requirements for Specialized Carbon and Alloy Steel Pipe
A536-84	1984 (R 2004)	Standard Specification for Ductile Iron Castings

Table 1.9-22

Industrial Codes and Standards[1] Applicable to ESBWR

Code or Standard Number	Year	Title
A564/A564M-04	2004 (R 2009)	Standard Specification for Hot-Rolled and Cold-Finished Age-Hardening Stainless Steel Bars and Shapes
A571-84	1984 (R 1997)	Standard Specification for Austenitic Ductile Iron Castings for Pressure-Containing Parts Suitable for Low-Temperature Service (Note: 1984 version referenced for consistency with RG 1.143. More recent version exists.)
A572/A572M-07	2007	Standard Specification for High-Strength Low-Alloy Columbium-Vanadium Structural Steel
A576-90b	1990 (R 2006)	Standard Specification for Steel Bars, Carbon, Hot-Wrought, Special Quality
A615/A615M-08	2008	Standard Specification for Deformed and Plain Carbon-Steel Bars for Concrete Reinforcement
A668/A668M-04	2004	Standard Specification for Steel Forgings, Carbon and Alloy, for General Industrial Use
A709/A709M-07	2007	Standard Specification for Structural Steel for Bridges
A800/A800M-01 (2006)	2006	Standard Practice for Steel Casting, Austenitic Alloy, Estimating Ferrite Content Thereof
A887-89	1989 (R 2004)	Standard Specification for Borated Stainless Steel Plate, Sheet, and Strip for Nuclear Application
A992/A992M-06a	2006	Standard Specification for Structural Steel Shapes
B8-04	2004	Standard Specification for Concentric-Lay-Stranded Copper Conductors, Hard, Medium-Hard, or Soft
B61-08	2008	Standard Specification for Steam or Valve Bronze Castings
B62-02	2002	Standard Specification for Composition Bronze or Ounce Metal Castings
B359-98	1998	Standard Specification for Copper and Copper-Alloy Seamless Condenser and Heat Exchanger Tubes With Integral Fins (Note: 1998 version referenced for consistency with RG 1.143. More recent version exists.)
C33-07	2007	Standard Specification for Concrete Aggregates
C150-07	2007	Standard Specification for Portland Cement
C260-06	2006	Standard Specification for Air-Entraining Admixtures for Concrete
C494/C494M-08	2008	Standard Specification for Chemical Admixtures for Concrete
C618-08	2008	Standard Specification for Coal Fly Ash and Raw or Calcined Natural Pozzolan for Use in Concrete
C776-06	2006	Standard Specification for Sintered Uranium Dioxide Pellets
D512-04	2004	Standard Test Methods for Chloride Ion In Water
D635-06	2006	Standard Test Method for Rate of Burning and/or Extent and Time of Burning of Plastics in a Horizontal Position
D975-08	2008	Standard Specification for Diesel Fuel Oils

Table 1.9-22

Industrial Codes and Standards[1] Applicable to ESBWR

Code or Standard Number	Year	Title
D1411-04	2004	Standard Test Methods for Water-Soluble Chlorides Present as Admixtures in Graded Aggregate Road Mixes
D3350-06	2006	Standard Specification for Polyethylene Plastics Pipe and Fittings Materials
D3803-89	1989 (R 1995)	Standard Test Method for Nuclear-Grade Activated Carbon (Note: more recent version exists)
D3843-00	2000	Standard Practice for Quality Assurance for Protective Coatings Applied to Nuclear Facilities
D3911-03	2003	Standard Test Method for Evaluating Coatings Used in Light-Water Nuclear Power Plants at Simulated Design Basis Accident (DBA) Conditions
D3912-95	1995 (R 2001)	Standard Test Method for Chemical Resistance of Coatings Used in Light-Water Nuclear Power Plants
D5144-00	2000	Standard Guide for Use of Protective Coating Standards in Nuclear Power Plants
E84-08a	2008	Standard Test Method for Surface Burning Characteristics of Building Materials
E119-08a	2008	Standard Test Methods for Fire Tests of Building Construction and Materials
E185-82	1982	Standard Practice for Design of Surveillance Programs for Light-Water Moderated Nuclear Power Reactor Vessels (Note: 1982 version referenced for consistency with 10 CFR 50 Appendix H. More recent version exists).
E399-06e2	2006	Standard Test Method for Linear-Elastic Plane-Strain Fracture Toughness K Ic of Metallic Materials
E741-00	2000 (R 2006)	Standard Test Method for Determining Air Change in a Single Zone by Means of a Tracer Gas Dilution
E797-05	2005	Standard Practice for Measuring Thickness by Manual Ultrasonic Pulse-Echo Contact Method
E814-06	2006	Standard Test Method for Fire Tests of Through-Penetration Fire Stops
E1820-08	2008	Standard Test Method for Measurement of Fracture Toughness
SI 10-02	2002	International System of Units (SI): The Modern Metric System – Revision to IEEE/ASTM SI 10-1997
American Water Works Association (AWWA)		
C200-97	1997	Steel Water Pipe – 6 in. (150mm) and Larger, 2nd Edition
C203-02	2002	Coal-Tar Protective Coatings and Linings for Steel Water Pipelines – Enamel and Tape – Hot Applied
C303-02	2002	Reinforced Concrete Pressure Pipe, Steel Cylinder Type, Pretensioned for Water and Other Liquids
D100-96	1996	Welded Steel Tanks for Water Storage

Table 1.9-22

Industrial Codes and Standards[1] Applicable to ESBWR

Code or Standard Number	Year	Title
American Welding Society (AWS)		
A4.2M/A4.2:97	1997	Standard Procedures for Calibrating Magnetic Instruments to Measure the Delta Ferrite Content of Austenitic and Duplex Ferritic-Austenitic Stainless Steel Weld Metal
A5.4/A5.4M:2006	2006	Specification for Stainless Steel Electrodes for Shielded Metal Arc Welding
D1.1/D1.1M:04	2004	Structural Welding Code – Steel – Errata 1:2004; Errata
D1.3:98	1998	Structural Welding Code - Sheet Steel - Errata
D1.4:98	1998	Structural Welding Code - Reinforcing Steel - Errata
D1.6:99	1999	Structural Welding Code – Stainless Steel
D9.1M/9.1:2000	2000	Sheet Metal Welding Code
D14.1:97	1997	Specification for Welding of Industrial and Mill Cranes and Other Material Handling Equipment
D14.6:96	1996	Specification for Welding of Rotating Elements of Equipment
American Bearing Manufacturers Association (ABMA)		
4-94	1994 (R 1999)	Tolerance Definition and Gaging Practices for Ball and Roller Bearings
9-90	1990	Load Ratings and Fatigue Life for Ball Bearings
11-90	1990 (R 1999)	Load Ratings and Fatigue Life for Roller Bearings
Cooling Technology Institute (CTI)		
ATC-105 (00)	2000	Acceptance Test Code for Water Cooling Towers
STD-146 (95)	1995	Standard for Water Flow Measurement
Electric Power Research Institute (EPRI)		
NP-495	1978	Sources of Radioiodine at Boiling Water Reactors
NP-1831	1981	An Engineering Approach for Elastic-Plastic Fracture Analysis
NP-3540-LD	1984	Two Phase Flow Through Intergranular Stress Corrosion Cracks and Resulting Acoustic Emission
NP-3596-SR	1981	PICEP: Pipe Crack Evaluation Program, Special Report, Revision 1
NP-3607	1984	Advances in Elastic-Plastic Fracture Analysis
NP-3915	1985	Guidelines for Nuclear Power Plant Performance Data Acquisition
NP-4867M	1987	Concrete Containment Tests, Phase 2: Structural Elements with Liner Plates
NP-4869M	1987	Methods for Ultimate Load Analysis of Concrete Containments: Second Phase
NP-4946-SR	1988	BWR Normal Water Chemistry Guidelines

Table 1.9-22

Industrial Codes and Standards[1] Applicable to ESBWR

Code or Standard Number	Year	Title
NP-4947-SR	1987	BWR Hydrogen Water Chemistry Guidelines
NP-5080	1987	Hydrogen Water Chemistry for BWRs – Material Behavior
NP-5283-SR-A	1987	Guidelines for Permanent BWR Hydrogen Water Chemistry Installations
NP-5380	1987	NCIG-01 – Visual Weld Acceptance Criteria for Structural Welding at Nuclear Power Plants, Revision 2, September 1987.
NP-5479	1993	Application Guidelines for Check Valves in Nuclear Power Plants, Revision 1
NP-5930	1988	A Criterion for Determining Exceedance of the Operating Basis Earthquake
NP-6559	1989	Voice Communication System Compatible with Respiratory Protection
NP-6695	1989	Guidelines for Nuclear Plant Response to an Earthquake
NSAC-202L	1999	Recommendations for an Effective Flow-Accelerated Corrosion Program, Revision 2
TR-100082	1991	Standardization of Cumulative Absolute Velocity
TR-1008192	2004	BWRVIP-130: BWR Vessel and Internals Project, BWR Water Chemistry Guidelines
TR-102323	1994	Guidelines for Electromagnetic Interference Testing in Power Plants, Rev. 0 (as approved by NRC Safety Evaluation Report dated April 16, 1996)
TR-106439	1996	Guidelines on Evaluation and Acceptance of Commercial Grade Digital Equipment for Nuclear Safety Applications
URD	1997	Advanced Light Water Reactor Utility Requirements Document, Volume III, Revision 6, May 1997 and Volume II, Chapter 1 Appendix A, PRA Key Assumptions and Groundrules", Revision 6, December 1993.
Electronic Industries Alliance (EIA)		
160-51	1951	Sound Systems
276-A-80	1980	Acceptance Testing of Dynamic Loudspeakers
278-B-76	1976	Mounting Dimensions for Loudspeakers
299-A-75	1975	Loudspeakers, Dynamic, Magnetic Structures and Impedance
310-D-92	1992	Racks, Panels, and Associated Equipment
405-73	1973 (R 1979)	Recommended Test Methods for Flutter Measurement of Instrumentation Magnetic Tape Recorder/Reproducers
ANSI/EIA 426-B-98	1998	Loudspeakers, Optimum Amplifier Power
TIA/EIA-4720000-A-93	1993	Generic Specification for Fiber Optic Cable

Table 1.9-22

Industrial Codes and Standards[1] Applicable to ESBWR

Code or Standard Number	Year	Title
Fluid Controls Institute (FCI)		
FCI 70-2	2003	Quality Control Standard for Control Valve Seat Leakage
Heat Exchange Institute (HEI)		
	2006	Standards for Steam Surface Condensers, 10th Edition, 2006
Hydraulic Institute (HI)		
ANSI/HI 1.6 (M104)	2000	Centrifugal Tests, issued January 1, 2000
ANSI/HI 2.6 (M108)	2000	American National Standard for Vertical Pump Tests, issued January 1, 2000
ANSI/HI 9.8	1998	American National Standard for Centrifugal and Vertical Pump Intake Design
Various IDs	2000	Standards for Centrifugal, Rotary and Reciprocating Pumps
Illuminating Engineering Society of North America (IESNA)		
HB-9-00	2000	IESNA Lighting Handbook, 9th Edition – Errata July 29, 2004
RP-1-04	2004	Office Lighting
RP-7-01	2001	Lighting Industrial Facilities – ANSI Approved – Errata 2001; Errata July 20, 2004
RP-8-00	2000	Roadway Lighting – ANSI Approved – Errata July 20, 2004
Institute of Electrical and Electronics Engineers (IEEE)		
1-2000	2000 (R 2005)	Recommended Practice – General Principles for Temperature Limits in the Rating of Electric Equipment and for the Evaluation of Electrical Insulation
7-4.3.2-2003	2003	IEEE Standard Criteria for Digital Computers in Safety Systems of Nuclear Power Generating Stations
32-1972	1972 (R 1997)	Standard Requirements, Terminology, and Test Procedure for Neutral Grounding Devices
67-1972	1972 (R 1980)	Guide for Operation and Maintenance of Turbine Generators (Note: 1990 and 2005 versions exist)
80-2000	2000	Guide for Safety in AC Substation Grounding
81-1983	1983	Guide for Measuring Earth Resistivity, Ground Impedance, and Earth Surface Potentials of a Ground System
98-2002	2002	Standard for the Preparation of Test Procedures for Thermal Evaluation of Solid Electrical Insulating Materials
100-2000	2000	The Authoritative Dictionary of IEEE Standards Terms Seventh Edition
101-1987	1987 (R 2004)	Guide for the Statistical Analysis of Thermal Life Test Data

Table 1.9-22

Industrial Codes and Standards[1] Applicable to ESBWR

Code or Standard Number	Year	Title
112-2004	2004	Standard Test Procedure for Polyphase Induction Motors and Generators
115-1995	1995 (R 2002)	Guide: Test Procedures for Synchronous Machines: Part I – Acceptance and Performance Testing, Part II – Test Procedures and Parameter Determination for Dynamic Analysis
122-1991	1991 (R 2003)	Recommended Practice for Functional and Performance Characteristics of Control Systems for Steam Turbine-Generator Units
142-1991	1991	Recommended Practice for Grounding of Industrial and Commercial Power Systems – Green Book Correction Sheet May 1993, Corrected Edition April 1996 (Note: 2007 version exists)
242-2001	2001	Recommended Practice for Protection and Coordination of Industrial and Commercial Power Systems
279-1971	1971 (R 1978)	Criteria for Protection Systems for Nuclear Power Generating Stations (Note – Withdrawn June 1984, and superseded by IEEE-603. Included here because it is still referred to in some Federal regulations)
300-1988	1988 (R 1999)	Standard Test Procedures for Semiconductor Charged-Particle Detectors
301-1988	1988 (R 1999)	Standard Test Procedures for Amplifiers and Preamplifiers Used with Detectors of Ionizing Radiation
308-2001	2001	Standard Criteria for Class 1E Power Systems for Nuclear Power Generating Stations
309-1999	1999	Standard Test Procedures and Bases for Geiger-Mueller Counters – ANSI N42.3
317-1983	1983 (R 2003)	Standard for Electric Penetration Assemblies in Containment Structures for Nuclear Power Generating Stations
323-1974	1974	Standard for Qualifying Class 1E Equipment for Nuclear Power Generating Stations (Note – this earlier version is applied to RG 1.89 qualification of equipment in a harsh environment)
323-2003	2003	Standard for Qualifying Class 1E Equipment for Nuclear Power Generating Stations
334-1994	1994 (R 1999)	IEEE Standard for Qualifying Continuous Duty Class 1E Motors for Nuclear Power Generating Stations (Note: 2006 version exists)
336-1985	1985 (R 1991)	Standard Installation, Inspection and Testing Requirements for Power, Instrumentation, and Control Equipment at Nuclear Facilities
338-1987	1987 (R 2000)	Standard Criteria for the Periodic Surveillance Testing of Nuclear Power Generating Station Safety Systems (Note: 2006 version exists)
344-1987	1987 (R 1993)	Recommended Practice for Seismic Qualification of Class 1E Equipment for Nuclear Power Generating Stations (Note: 2004 version exists.)
352-1987	1987 (R 2004)	Guide for General Principles of Reliability Analysis of Nuclear Power Generating Station Safety Systems (including errata dated 4 April 1994)

Table 1.9-22

Industrial Codes and Standards[1] Applicable to ESBWR

Code or Standard Number	Year	Title
379-2000	2000	Standard Application of the Single Failure Criterion to Nuclear Power Generating Station Safety Systems
381-1977	1977 (R 1984)	Standard Criteria for Type Tests of Class 1E Modules Used in Nuclear Power Generating Stations
382-1996	1996 (R 2004)	Standard for Qualification of Actuators for Power-Operated Valve Assemblies with Safety-Related Functions for Nuclear Power Plants (Note: 2006 version exists)
383-2003	2003	Standard for Qualifying Class 1E Electric Cables and Field Splices for Nuclear Power Generating Stations
384-1992	1992 (R 1998)	Standard Criteria for Independence of Class 1E Equipment and Circuits
420-2001	2001	Standard for the Design and Qualification of Class 1E Control Boards, Panels, and Racks Used in Nuclear Power Generating Stations
450-2002	2002	Recommended Practice for Maintenance, Testing, and Replacement of Vented Lead-Acid Batteries for Stationary Applications
484-2002	2002	Recommended Practice for Installation Design and Installation of Vented Lead-Acid Batteries for Stationary Applications
485-1997	1997 (R 2003)	Recommended Practice for Sizing Lead-Acid Batteries for Stationary Applications
497-2002	2002	Standard Criteria for Accident Monitoring Instrumentation for Nuclear Power Generating Stations
518-1982	1982	Guide for the Installation of Electrical Equipment to Minimize Electrical Noise Inputs to Controllers from External Sources
519-1992	1992	Recommended Practices and Requirements for Harmonic Control in Electrical Power Systems
535-1986	1986 (R 1994)	Standard for Qualification of Class 1E Lead Storage Batteries for Nuclear Power Generating Stations (Note: 2006 version exists)
572-1985	1985 (R 2004)	Standard for Qualification of Class 1E Connection Assemblies for Nuclear Power Generating Stations (Note: 2006 version exists)
577-2004	2004	Standard Requirements for Reliability Analysis in the Design and Operation of Safety Systems for Nuclear Facilities
603-1991	1991	Standard Criteria for Safety Systems for Nuclear Power Generating Stations (including the correction sheet dated January 30, 1995) (Note: 1998 version exists, but it is not endorsed by NRC.)
622-1987	1987 (R 1994)	Recommended Practice for the Design and Installation of Electric Heat Tracing Systems for Nuclear Power Generating Stations
627-1980	1980 (R 1996)	Standard for Design Qualification of Safety Systems Equipment Used in Nuclear Power Generating Stations

Table 1.9-22

Industrial Codes and Standards[1] Applicable to ESBWR

Code or Standard Number	Year	Title
628-2001	2001	Standard Criteria for the Design, Installation, and Qualification of Raceway Systems for Class 1E Circuits for Nuclear Power Generating Stations
634-2004	2004	Standard Cable-Penetration Fire Stop Qualification Test
638-1992	1992 (R 2006)	Standard for Qualification of Class 1E Transformers for Nuclear Power Generating Stations
649-1991	1991 (R 2004)	Standard for Qualifying Class 1E Motor Control Centers for Nuclear Power Generating Stations (Note: 2006 version exists)
650-1990	1990 (R 1998)	Standard for Qualification of Class 1E Static Battery Chargers and Inverters for Nuclear Power Generating Stations (Note: 2006 version exists)
665-1995	1995	Guide for Generation Station Grounding
666-1991	1991 (R 1996)	IEEE Design Guide for Electric Power Service Systems for Generating Stations (Note: 2007 version exists)
690-2004	2004	Standard for the Design and Installation of Cable Systems for Class 1E Circuits in Nuclear Power Generating Stations
692-1997	1997	Standard Criteria for Security Systems for Nuclear Power Generating Stations
730-2002	2002	Standard for Software Quality Assurance Plans – IEEE Computer Society Document
741-1986	1986	Standard Criteria for the Protection of Class 1E Power Systems and Equipment in Nuclear Power Generating Stations (Note: 2007 and 1997 (R 2002) versions exist but are not endorsed by RG 1.63)
765-2002	2002	Standard for Preferred Power Supply (PPS) for Nuclear Power Generating Stations (Note: 2006 version exists)
802.1D-2004	2004	Standard for Local and Metropolitan Area Networks Media - Access Control (MAC) Bridges – IEEE Computer Society Document; Amendment 1: 8021-17a September 23, 2004
802.3-2002	2002	Standard for Information Technology Telecommunications and Information Exchange Between Systems Local and Metropolitan Area Networks Specific Requirements Part 3: Carrier Sense Multiple Access with Collision Detection (CSMA/CD) Access Method and Physical Layer Specifications – IEEE Computer Society Document; Amendment AE: June 13, 2002; Amendment AK: February 9, 2004; Amendment AH: June 24, 2004
802.5-1998	1997 (R 2003)	Information Technology – Telecommunication and Information Exchange Between Systems- Local and Metropolitan Area Networks – Part 5: Token Ring Access Method and Physical Layer Specification – IEEE Computer Society Document; Corrigendum 802.5w-2000; Amendment 802.5v-2001; ISO/IEC 8802-5
828-1990	1990	Standard for Software Configuration Management Plans – IEEE Computer Society Document (Note: 2005 version exists, but it is not endorsed by NRC.)

Table 1.9-22

Industrial Codes and Standards[1] Applicable to ESBWR

Code or Standard Number	Year	Title
829-1983	1983	Standard for Software Test Documentation – IEEE Computer Society Document (Note: 1998 version exists, but it is not endorsed by NRC.)
830-1993	1993	Recommended Practice for Software Requirements Specifications (Note: 1998 version exists, but it is not endorsed by NRC.)
835-1994	1994 (R 2000)	Standard Power Cable Ampacity Tables – Supersedes IPCEA P-46-246
944-1986	1986 (R 1996)	Recommended Practice for the Application and Testing of Uninterruptible Power Supplies for Power Generating Stations
946-1992	1992	Recommended Practice for the Design of DC Auxiliary Power Systems for Generating Stations (Note: 2004 version exists, but it is not endorsed by NRC.)
1008-1987	1987 (R 2002)	Standard for Software Unit Testing
1012-1998	1998	Standard for Software Verification and Validation – IEEE Computer Society Document (Note: 2004 version exists, but it is not endorsed by NRC.)
1016-1998	1998	Recommended Practice for Software Design Descriptions
1023-2004	2004	Recommended Practice for the Application of Human Factors Engineering to Systems, Equipment, and Facilities of Nuclear Power Generating Stations and Other Nuclear Facilities
1028-1997	1997	Standard for Software Reviews and Audits
1042-1987	1987 (R 1993)	Guide to Software Configuration Management
1050-1996	1996	Guide for Instrumentation and Control Equipment Grounding in Generating Stations (Note: 2004 version exists but is not endorsed by RG 1.204)
1058-1998	1998	Standard for Software Project Management Plans
1058.1-1987	1987 (R 1993)	Standard for Software Project Management Plans
1074-1995	1995	Standard for Developing Software Life Cycle Processes (Note: 2006 and 1997 versions exist, but are not endorsed by NRC.)
1082-1997	1997 (R 2003)	Guide for Incorporating of Human Action Reliability Analysis for Nuclear Power Generating Stations
(Deleted)		
1202-2006	2006	Standard for Flame-Propagation Testing of Wire and Cable
1205-2000	2000	Guide for Assessing, Monitoring and Mitigating Aging Effects on Class 1E Equipment Used in Nuclear Power Generating Stations
1219-1998	1998	IEEE Standard for Software Maintenance

Table 1.9-22

Industrial Codes and Standards[1] Applicable to ESBWR

Code or Standard Number	Year	Title
1228-1994	1994 (R 2002)	Software Safety Plans
C2-2002	2002	National Electrical Safety Code (Note: 2007 version exists)
C37.04-1999	1999	Standard Rating Structure for AC High-Voltage Circuit Breakers (including Errata published 29 November 2005)
C37.04a-2003	2003	Amendment 1 – Capacitance Current Switching
C37.06-2000	2000	AC High-Voltage Circuit Breakers Rated on a Symmetrical Current Basis – Preferred Ratings and Related Required Capabilities – Replaces NEMA C37.06-2000 (Also endorsed by ANSI)
C37.09-1999	1999	Standard Test Procedure for AC High-Voltage Circuit Breakers Rated on a Symmetrical Current Basis
C37.010-1999	1999	Application Guide for AC High-Voltage Circuit Breakers Rated on a Symmetrical Current Basis (Also endorsed by ANSI)
C37.11-1997	1997 (R 2003)	Standard Requirements for Electrical Control for AC High-Voltage Circuit Breakers Rated on a Symmetrical Current Basis – Revision of ANSI C37.11-1979
C37.13-1990	1990 (R 1995)	Standard for Low-Voltage AC Power Circuit Breakers Used in Enclosures
C37.013-1997	1997	IEEE Standard for AC High-Voltage Generator Circuit Breakers Rated on a Symmetrical Current Basis
C37.14-2002	2002	Standard for Low-Voltage DC Power Circuit Breakers Used in Enclosures
C37.16-2000	2000	Low-Voltage Power Circuit Breakers and AC Power Circuit Protectors – Preferred Ratings, Related Requirements, and Application Recommendations – Replaces NEMA C 37.16-2000 (Also endorsed by ANSI)
C37.17-1997	1997	American National Standard for Trip Devices for AC and General-Purpose DC Low Voltage Power Circuit Breakers – Replaces NEMA C37.17-1997 (Also endorsed by ANSI)
C37.20.1-2002	2002	Metal-Enclosed Low-Voltage Power Circuit-Breaker Switchgear
C37.20.2-1999	1999	Standard for Metal-Clad Switchgear
C37.20.3-2001	2001	Metal-Enclosed Interrupter Switchgear
C37.21-1985	1985 (R 1998)	Control Switchboards
C37.32-2002	2002	High-Voltage Switches, Bus Supports and Accessories – Schedule of Preferred Ratings Construction Guidelines and Specifications – Revision ANSI C37.32 – Now copyrighted by IEEE
C37.82-1987	1987 (R 2004)	Standard for Qualification of Switchgear Assemblies for Class 1E Applications in Nuclear Power Generating Stations
C37.90-1989	1989 (R 1994)	Standard for Relays and Relay Systems Associated with Electric Power Apparatus

Table 1.9-22

Industrial Codes and Standards[1] Applicable to ESBWR

Code or Standard Number	Year	Title
C37.90.1-2002	2002	Standard for Surge Withstand Capability (SWC)
C37.98-1987	1987 (R 1999)	Standard for Seismic Testing for Relays
C37.100-1992	1992 (R 2001)	Standard Definitions for Power Switchgear
C37.101-1993	1993 (R 2000)	Guide for Generator Ground Protection (Note: 2006 version exists)
C37.102-1995	1995	Guide for AC Generator Protection (Note: 2006 version exists)
C57.12.00-2000	2000	Standard General Requirements for Liquid-Immersed Distribution, Power, and Regulating Transformers (Note: 2006 version exists)
C57.12.01-1998	1998	General Requirements for Dry-Type Distribution and Power Transformers Including those with Solid Cast and/or Resin-Encapsulated Windings (Note: 2005 version exists)
C57.12.51-1981	1981 (R 1998)	Requirements for Ventilated Dry-Type Transformers 501 kVa and Larger Three Phase, High-Voltage 601 to 34,500 volts Low Voltage 208Y/120 to 4160 volts (Also endorsed by ANSI)
C57.12.70-2000	2000 (R 2003)	Standard Terminal Markings and Connections for Distribution and Power Transformers
C57.12.80-2002	2002	Standard Terminology for Power and Distribution Transformers
C57.12.90-2006	2006	IEEE Standard Test Code for Liquid-Immersed Distribution, Power, and Regulating Transformers
C57.13-1993	1993 (R 2003)	Standard Requirements for Instrument Transformers
C57.15-1999	1999	Standard Requirements, Terminology, and Test Code for Step-Voltage Regulators
C57.91-1995	1995 (R 2004)	IEEE Guide for Loading Mineral-Oil-Immersed Transformers
C57.93-1995	1995 (R 2001)	IEEE Guide for Installation of Liquid-Immersed Power Transformers (Note: 2007 version exists)
C62.23-1995	1995 (R 2001)	IEEE Application Guide for Surge Protection of Electric Generating Plants
C63.4-2003	2003	American National Standard for Methods of Measurement of Radio-Noise Emissions from Radio-Noise Field Strength 0.015 to 25 Megacycles/Second, Low Voltage Electrical and Electronic Equipment in the Range of 9 kHz to 40 GHz – Revision 7 – ANSI C63.4-2001
N42.5-1965	1965 (R 1991)	Bases for GM Counter Tubes
N320-1979	1979 (R 1993)	Performance Specifications for Reactor Emergency Radiological Monitoring Instrumentation
N323-1978	1978 (R 1993)	Radiation Protection Instrumentation Test and Calibration

Table 1.9-22

Industrial Codes and Standards[1] Applicable to ESBWR

Code or Standard Number	Year	Title
N323A-1997	1997	Radiation Protection Instrumentation Test and Calibration, Portable Survey Instruments
Instrumentation, Systems, and Automation Society (ISA)		
7.0.01-1996	1996	Quality Standard for Instrument Air (Formerly ANSI/ISA S70.01-1996)
67.02.01-1999	1999	Nuclear Safety-Related Instrument Sensing Line Piping and Tubing Standards for Use in Nuclear Power Plants (Formerly ANSI/ISA – 67.02-.01-1999)
d67.03.01-1997	Draft 1997	Standard for Light Water Reactor Coolant Pressure Boundary Leak Detection (Note: 1982 issued version has been withdrawn)
67.04.01-2006	2006	Setpoints for Nuclear Safety-Related Instrumentation
ANSI/ISA MC96.1-1982	1982	Temperature Measurement Thermocouples
International Code Council (ICC)		
IFC	2003	International Fire Code
IBC	2003	International Building Code
IMC	2003	International Mechanical Code
International Electrotechnical Commission (IEC)		
880	1986	Software for Computers in the Safety Systems of Nuclear Power Stations
880 Supplement 1 Draft	1996	Software for Computers in the Safety Systems of Nuclear Power Stations
61000-4 series		Electromagnetic Compatibility (EMC): Testing and Measurement Techniques
Manufacturers Standardization Society of the Valve and Fittings Industry, Inc (MSS)		
SP-55-2006	2006	Quality Standard for Steel Castings for Valves, Flanges and Fittings and Other Piping Components – Visual Method for Evaluation of Surface Irregularities
SP-58-2002	2002	Pipe Hangers and Supports – Materials, Design, and Manufacture
SP-61-2003	2003	Pressure Testing of Steel Valves
SP-67-2002a	2002	Butterfly Valves
SP-69-2003	2003	Pipe Hangers and Supports – Selection and Application (also known as ANSI/MSS SP-69-2003)
SP-77-1995	1995 (R 2000)	Guidelines for Pipe Support Contractual Relationships
SP-89-2003	2003	Pipe Hangers and Supports – Fabrication and Installation Practices
SP-127-2001	2001	Bracing for Piping Systems Seismic-Wind-Dynamic Design, Selection, Application

Table 1.9-22

Industrial Codes and Standards[1] Applicable to ESBWR

Code or Standard Number	Year	Title
Department of Defense (DOD) Military Standards (MIL-STD) and Handbooks (MIL-HDBK)		
MIL-HDBK-759C	1995	Handbook for Human Engineering Design Guidelines (including change notices through Change Notice 2 dated August 31, 1998)
MIL-STD-461E	1999	Requirements for the Control of Electromagnetic Interference Characteristics of Subsystems and Equipment
MIL-STD-1472F	1999	Human Engineering (DOD Design Criteria Standard)
National Air Filtration Association (NAFA)		
	2006	Installation, Operation and Maintenance of Air Filtration Systems, 2nd Edition
National Electrical Manufacturers Association (NEMA)		
250-2003	2003	Enclosures for Electrical Equipment (1000 Volts maximum)
AB 1-2002	2002	Molded Case Circuit Breakers
AB 3-2001	2001	Molded Case Circuit Breakers and Their Application
C18.1M, Part 1-2001	2001	Portable Primary Cells and Batteries with Aqueous Electrolyte – General and Specifications
C18.1M, Part 2-2003	2003	American National Standard For Portable Primary Cells and Batteries with Aqueous Electrolyte – Safety Standard
C37.46-2000	2000	High Voltage Expulsion and Current – Limitary Type Power Class Fuses and Fuse Disconnecting Switches – Now copyrighted by NEMA
C37.50-1989	1989 (R 1995)	Switchgear – Low-Voltage AC Power Circuit Breakers Used in Enclosures – Test Procedures
C37.51-2003	2003	Switchgear – Metal-Enclosed Low-Voltage AC Power Circuit Breaker Switchgear Assemblies – Conformance Test Procedures
C57.12.51-1981	1981 (R 1998)	Requirements for Ventilated Dry – Type Power Transformers, 501kVA and Larger, Three-Phase, with High-Voltage 601 to 34,500 Volts, Low-Voltage 208Y/120 to 4160 Volts
CC 1-2002	2002	Electric Power Connection for Substations
ICS 1-2000	2000	Industrial Control and Systems: General Requirements
ICS 2-2000	2000	Industrial Control and Systems: Controllers, Contactors, and Overload Relays, 600 Volts – Addenda Errata May 23, 2002
ICS 2.3-1995	1995 (R 2002)	Instructions for the Handling, Installation, Operation and Maintenance of Motor Control Centers Rated Not More Than 600 Volts
ICS 3-1993	1993 (R 2000)	Industrial Control and Systems Factory Built Assemblies – Errata: October 25, 2004
ICS 4-2000	2000	Industrial Automation Control Products and Systems Sections Terminal Blocks
ICS 6-1993	1993 (R 2001)	Industrial Control Systems Enclosures

Table 1.9-22

Industrial Codes and Standards[1] Applicable to ESBWR

Code or Standard Number	Year	Title
KS 1-2001	2001	Enclosed and Miscellaneous Distribution Equipment Switches (600 Volts Maximum)
LA 1-1992	1992 (R 1999)	Surge Arresters
MG 1-2003	2003	Motors and Generators, Revision 1: 2004
MG2-2001	2001	Safety Standard for Construction and Guide for Selection, Installation, and Use of Electric Motors and Generators
PB 1-2000	2000	Panelboards
PE 5-1996	1996 (R 2003)	Utility-Type Electric Battery Chargers
SG 3-1990	1990	Low-Voltage Power Circuit Breakers
SG 4-2000	2000	Alternating-Current High-Voltage Circuit Breakers
SG 5-1990	1990	Power Switchgear Assemblies
SM 24-1991	1991 (R 2002)	Land-Based Steam Turbine Generator Sets 0 to 33,000 kW
ST 20-1992	1992 (R 1997)	Dry-Type Transformers for General Applications
VE 1-2002	2002	Metal Cable Tray Systems – CSA C22.2 No 126.1-02
WC 3-1980	1980	Rubber – Insulated Wire and Cable for the Transmission and Distribution of Electrical Energy (ICEA S-19-81) (R 1986) Revision 1 – January 1983, Revision No. 2 – December 1984, Revision No. 3 – August 1986, Revision No. 4 – July 1987, Revision No. 5 – May 1988, Revision No. 6 – May 1989
WC 5-1992	1992	Thermoplastic-Insulated Wire and Cable for the Transmission and Distribution of Electrical Energy-Superseded by NEMA WC 70, WC 71, and WC 74; Supersedes ICEA S-61-402; Revision No. 1 – December 7, 1993; Revision No. 2 – December 1996
WC 7-1988	1988 (R 1991)	Cross-Linked-Thermosetting-Polyethylene-Insulated Wire and Cable for the Transmission and Distribution of Electrical Energy –Superseded by NEMA WC 70, WC 71, and WC 72; Supersedes ICEA NO. S-66-524; Revision No. 1 – September 1991; Revision 2 – July 16, 1992; Revision No. 3 – December 1996; Revision No. 4 – September, 1998
WC 8-1988	1988	Ethylene-Propylene-Rubber-Insulated Wire and Cable for the Transmission and Distribution of Electrical Energy – Superseded by NEMA WC 70, WC 71, and WC 74; Supersedes ICEA S-68-516; Revision No. 1 – September 1991; Revision No. 2 – July 1992; Revision No. 3 – December 1996
WC 51-2003	2003	Ampacities of Cables Installed in Cable Trays (Also known as ANSI/ICEA P-54-440)
WC 70	1999	Nonshielded Power Cables Rated 2000 V or Less (Also known as ICEA S-95-658)

Table 1.9-22

Industrial Codes and Standards[1] Applicable to ESBWR

Code or Standard Number	Year	Title
National Fire Protection Association (NFPA)		
NFPA 1	2003	Uniform Fire Code Handbook
NFPA 10	2002	Standard for Portable Fire Extinguishers
NFPA 11	2002	Standard for Low-, Medium- and High-Expansion Foam Systems
NFPA 12	2000	Standard on Carbon Dioxide Extinguishing Systems
NFPA 12A	2004	Standard on Halon 1301 Fire Extinguishing Systems
NFPA 13	2002	Standard for the Installation of Sprinkler Systems
NFPA 14	2003	Standard for the Installation of Standpipe and Hose Systems
NFPA 15	2001	Standard for Water Spray Fixed Systems for Fire Protection
NFPA 16	2003	Standard for the Installation of Foam-Water Sprinkler and Foam-Water Spray Systems
NFPA 20	2003	Standard for the Installation of Stationary Pumps for Fire Protection
NFPA 22	2003	Standard for Water Tanks for Private Fire Protection
NFPA 24	2002	Standard for the Installation of Private Fire Service Mains and their Appurtenances
NFPA 25	2002	Standard for Inspection, Testing, and Maintenance of Water-Based Fire Protection Systems
NFPA 30	2003	Flammable and Combustible Liquids Code
NFPA 37	2002	Standard for the Installation and Use of Stationary Combustion Engines and Gas Turbines
NFPA 50A	1999	Standard for Gaseous Hydrogen Systems at Consumer Sites
NFPA 51B	2003	Standard for Fire Prevention During Welding, Cutting, and Other Hot Work
NFPA 54	2006	National Fuel Gas Code
NFPA 55	2005	Standard for the Storage, Use, and Handling of Compressed Gases and Cryogenic Fluids in Portable and Stationary Containers, Cylinders, and Tanks
NFPA 58	2004	Liquefied Petroleum Gas Code
NFPA 69	2002	Standard on Explosion Prevention Systems
NFPA 70	2005	National Electrical Code
NFPA 72	2002	National Fire Alarm Code
NFPA 75	2003	Standard for the Protection of Information Technology Equipment
NFPA 80	1999	Standard for Fire Doors and Windows
NFPA 80A	2001	Recommended Practice for Protection of Buildings from Exterior Fire Exposures

Table 1.9-22

Industrial Codes and Standards[1] Applicable to ESBWR

Code or Standard Number	Year	Title
NFPA 90A	2002	Standard for the Installation of Air-Conditioning and Ventilating Systems
NFPA 90B	2002	Standard for the Installation of Warm Air Heating and Air-Conditioning Systems
NFPA 91	2004	Standard for Exhaust Systems for Air Conveying of Vapors, Gases, Mists and Noncombustible Particulate Solids
NFPA 92A	2006	Standard for Smoke-Control Systems Utilizing Barriers and Pressure Differences
NFPA 101	2003	Life Safety Code
NFPA 101A	2004	Guide on Alternative Approaches to Life Safety
NFPA 110	2002	Standard for Emergency and Standby Power Systems
NFPA 204	2002	Standard for Smoke and Heat Venting
NFPA 214	2000	Standard on Water-Cooling Towers
NFPA 220	2006	Standard on Types of Building Construction
NFPA 221	2006	Standard for High Challenge Fire Walls and Fire Barrier Walls
NFPA 241	2004	Standard for Safeguarding Construction, Alteration, and Demolition Operations
NFPA 251	2006	Standard Methods of Tests of Fire Endurance of Building Construction and Materials
NFPA 252	2003	Standard Methods of Fire Tests of Door Assemblies
NFPA 253	2006	Standard Method of Test for Critical Radiant Flux of Floor Covering Systems Using a Radiant Heat Energy Source
NFPA 255	2000	Standard Method of Test of Surface Burning Characteristics of Building Materials
NFPA 259	2003	Standard Test Method for Potential Heat of Building Material
NFPA 321	1991	Standard on Basic Classification of Flammable and Combustible Liquids – Incorporated into NFPA 30
NFPA 497	2004	Recommended Practice for the Classification of Flammable Liquids, Gases, or Vapors and of Hazardous (Classified) Locations for Electrical Installation in Chemical Process Areas
NFPA 600	2005	Standard on Industrial Fire Brigades
NFPA 701	2004	Standard Methods of Fire Tests for Flame Propagation of Textiles and Films
NFPA 703	2006	Standard for Fire-Retardant Treated Wood and Fire-Retardant Coatings for Building Materials
NFPA 750	2003	Standard on Water Mist Fire Protection Systems
NFPA 780	2004	Standard for the Installation of Lightning Protection Systems
NFPA 801	2003	Standard for Fire Protection Practices for Facilities Handling Radioactive Materials

Table 1.9-22

Industrial Codes and Standards[1] Applicable to ESBWR

Code or Standard Number	Year	Title
NFPA 804	2006	Standard for Fire Protection for Advanced Light Water Reactor Electric Generating Plants
NFPA 805	2006	Performance-Based Standard for Fire Protection for Light Water Reactor Electric Generating Plants
NFPA 1144	2008	Standard for Reducing Structure Ignition Hazards from Wildland Fire
NFPA 1404	2006	Standard for Fire Service Respiratory Protection Training
NFPA 1410	2005	Standard on Training for Initial Emergency Scene Operations
NFPA 1451	2007	Standard for a Fire Service Vehicle Operations Training Program
NFPA 1500	2007	Standard on Fire Department Occupational Safety and Health Program
NFPA 1620	2003	Recommended Practice for Pre-Incident Planning
NFPA 1961	2007	Standard on Fire Hose
NFPA 1962	2003	Standard for the Inspection, Care, and Use of Fire Hose, Couplings, and Nozzles and the Service Testing of Fire Hose
NFPA 1963	2003	Standard for Fire Hose Connections
NFPA 1964	2003	Standard for Spray Nozzles
NFPA 2001	2004	Standard for Clean Agent Fire Extinguishing Systems
Nuclear Energy Institute (NEI)		
91-04	1994	Severe Accident Issue Closure Guidelines, Revision 1, December 1994
94-01	1995	Industry Guideline for Implementing Performance-Based Option of 10 CFR Part 50, Appendix J, Revision 0, July 1995
99-03	2001	Control Room Habitability Assessment Guidance, Revision 0, June 2001
00-01	2005	Guidance for Post-Fire Safe Shutdown Analysis, Revision 1, January 2005
07-13	2009	Methodology for Performing Aircraft Impact Assessments for New Plant Designs, Revision 7, May 2009
NUMARC 91-06	1991	Guidelines for Industry Actions to Assess Shutdown Management
NUMARC 93-01	1996/2000	Industry Guidance for Monitoring the Effectiveness of Maintenance at Nuclear Power Plants, April 1996, including February 22, 2000 revision to Section 11.
Nuclear Information and Records Management Association, Inc. (NIRMA)		
TG 11-1998	1998	Authentication of Records and Media
TG 15-1998	1998	Management of Electronic Records
TG 16-1998	1998	Software Configuration Management and Quality Assurance
TG 21-1998	1998	Electronic Records Protection and Restoration

Table 1.9-22

Industrial Codes and Standards[1] Applicable to ESBWR

Code or Standard Number	Year	Title
Sheet Metal and Air Conditioning Contractors' National Association (SMACNA)		
1143	1985	HVAC Air Duct Leakage Test Manual, 1st Edition
1208	1990	HVAC Systems – Duct Design, 3rd Edition
1299	1980	Rectangular Industrial Duct Construction Standards, 1st Edition
1481	2005	HVAC Duct Construction Standards – Metal and Flexible, 3rd Edition
1520	1999	Round Industrial Duct Construction Standards, 2nd Edition
1780	2002	HVAC Systems – Testing, Adjusting and Balancing, 3rd Edition
The Society for Protective Coatings (SSPC)		
PA-1-00	2000	Shop, Field and Maintenance Painting of Steel
PA-2-04	2004	Measurements of Dry Coating Thickness with Magnetic Gages
SP-1-82	1982	Solvent Cleaning (Editorial Changes September 1, 2000)
SP-5-00	2000	White Metal Blast Cleaning – NACE No. 1 – 2000
SP-6-00	2000	Commercial Blast Cleaning – NACE No. 3 – 2000
SP-8-82	1982	Pickling (Editorial Changes September 1, 2000)
SP-10-00	2000	Near-White Blast Cleaning – NACE No. 2 – 2000
Telecommunications Industry Association (TIA)		
ANSI/TIA-603-C-2004	2004	Land Mobile FM or PM Communications Equipment Measurement and Performance Standards
422-B-94	1994 (R 2005)	Electrical Characteristics or Balanced Voltage Digital Interface Circuits
464-C-2002	2002	Requirements for Private Branch Exchange (PBX) Switching Equipment
TIA/EIA-4720000-A-93	1993	Generic Specification for Fiber Optic Cable
Underwriters Laboratories, Inc. (UL)		
Directory	2004	Fire Protection Equipment Directory
1	2000	UL Standard for Safety Flexible Metal Conduit, 10th Edition (with revisions up to and including July 30, 2004)
6	2004	UL Standard for Safety Electrical Rigid Metal Conduit Steel, 13th Edition
44	1999	UL Standard for Thermoset-Insulated Wires and Cables, 15th Edition (Reprint with Revisions through and Including November 1, 2001)
50	1995	UL Standard for Safety Enclosures for Electrical Equipment, 11th Edition (Reprint with Revision through and Including September 12, 2003)
67	1993	UL Standard for Safety Panelboards, 11th Edition (Revisions through and Including November 3, 2003)

Table 1.9-22

Industrial Codes and Standards[1] Applicable to ESBWR

Code or Standard Number	Year	Title
83	2003	UL Standard for Safety Thermoplastic-Insulated Wires and Cables, 12th Edition (Reprint with Revision through and Including March 1, 2004)
94	1996	UL Standard for Safety Tests for Flammability of Plastic Materials for Parts in Devices and Appliances, 5th Edition (Reprinted with Revisions through and Including December 12, 2003)
489	2002	UL Standard for Safety Molded-Case Circuit Breakers, Molded-Case Switches, and Circuit-Breaker Enclosures, 10th Edition (Reprint with Revisions through and Including May 28, 2004)
508	1999	UL Standard for Safety Industrial Control Equipment, 17th Edition (Reprint with Revisions through and Including December 2, 2003)
555	2006	UL Standard for Safety Fire Dampers, 7th Edition
555S	1999	UL Standard for Smoke Dampers, 4th Edition (Reprint with Revisions through and Including January 11, 2002)
586	1996	UL Standard for High-Efficiency, Particulate, Air Filter Units, 8th Edition (Reprint with Revisions through and Including August 6, 2004)
651	1995	UL Standard for Safety Schedule 40 and 80 Rigid PVC Conduit, 6th Edition (Reprint with Revisions through and Including August 2, 2004)
752	2005	UL Standard for Bullet-Resisting Equipment, 11th Edition (Reprint with Revisions through and including December 21, 2006)
797	2004	UL Standard for Safety Electrical Metallic Tubing – Steel, 8th Edition
845	1995	UL Standard for Safety for Motor Control Centers, 4th Edition (Reprint with Revisions through Including April 5, 2004)
875	2004	UL Standard for Safety Electric Dry-Bath Heaters, 8th Edition
886	1994	UL Standard for Safety Outlet Boxes and Fittings for Use in Hazardous (Classified) Locations, 10th Edition (Reprint with Revisions through and Including April 13, 1999)
900	2004	UL Standard for Safety Air Filter Units, 7th Edition
924	1995	UL Standard for Safety Emergency Lighting and Power Equipment, 8th Edition (Reprint with revisions through and Including July 11, 2001)
1096	1988	UL Standard for Safety Electric Central Air Heating Equipment, 4th Edition
1950	1995	UL Standard for Safety Information Technology Equipment, Including Electrical Business Equipment; Third Edition
1995	2005	UL Standard for Heating and Cooling Equipment, 3rd Edition
Others		
CMAA70	2004	Crane Manufacturers Association of America, Specification No. 70
DEMA	—	Standard Practices for Low and Medium Speed Stationary Diesel and Gas Engines
Factory Mutual (FM)	—	Factory Mutual Approval Guide

Table 1.9-22

Industrial Codes and Standards[1] Applicable to ESBWR

Code or Standard Number	Year	Title
390.02	1964	Gear Classification Manual by AGMA
HMR No. 52	1982	National Weather Service Publication: "Application of Probable Maximum Precipitation Estimates United States East of the 105th Meridan"
(Deleted)		
SNT-TC-1A	1992	Recommended Practice for Non-Destructive Testing by American Society for Nondestructive Testing (Note 2001 version exists)
TEMA	1999	Standards of Tubular Exchanger Manufacturers Association, Eighth Edition
—	2000	Aluminum Design Manual by Aluminum Association

Notes:
Other Organizations that are Referenced Without Specific Standards Listed:
Department of Transportation (DOT)
Federal Aviation Administration (FAA)
Federal Occupational Safety and Health Administration (OSHA)
Table sections that are bracketed and italicized with an asterisk following the brackets are designated as Tier 2. Prior NRC approval is required to change.

Table 1.9-23

NUREGs Referenced in ESBWR DCD

No.	Issue Date	Title	Comment/ Section where Referenced
0016 Rev. 1	01/1979	Calculation of Releases of Radioactive Materials in Gaseous and Liquid Effluents from Boiling Water Reactors	11.1, 11.2, 12.2, 12B
0123		Standard Technical Specifications for General Electric Boiling Water Reactors (superseded by NUREG-1434)	1.9
0133	10/1978	Preparation of Radiological Effluent Technical Specifications for Nuclear Power Plants	11.5
0138	11/1976	Staff Discussion of Fifteen Technical Issues Listed in Attachment to November 3, 1976, memorandum from Director, NRR to NRR Staff (PWR only – Not applicable to ESBWR)	1.9
0313 Rev. 2	6/1988	Technical Report on Material Selection and Processing Guidelines for BWR Coolant Pressure Boundary Piping	1.9, 1.11, 1C, 5.2, 5.3
0460	03/1980	Anticipated Transients Without Scram for Light Water Reactors	1.6, 15.0
0484 Rev. 1	05/1980	Methodology for Combining Dynamic Responses	3.9
0554	05/1979	Single-Failure-Proof Cranes for Nuclear Power Plants	1.9, 9.1
0562	06/1979	Fuel Rod Failure as a Consequence of Departure from Nucleate Boiling or Dryout	16B
0570	06/1979	Toxic Vapor Concentrations in the Control Room Following a Postulated Accidental Release	6.4
0588	12/1979	Interim Staff Position on Environmental Qualification of Safety-Related Electrical Equipment	1.11, 3.11
0609	01/1981	Asymmetric Blowdown Loads on PWR Primary Systems	6.2
0612	07/1980	Control of Heavy Loads at Nuclear Power Plants	1.11, 9.1, 13.5
0619	4/1980	BWR Feedwater Nozzle and Control Rod Drive Return Line Nozzle Cracking	1.11, 1C, 3.9
0654	10/1980	Criteria for Preparation and Evaluation of Radiological Emergency Response Plans and Preparedness in Support of Nuclear Power Plants	9.5, 18.6
0660	5/1980	NRC Action Plan Developed as a Result of the TMI-2 Accident	1A
0661 Supp. 1	8/1982	Safety Evaluation Report – Mark I Containment Long-Term Program – Resolution of Generic Technical Activity A-7	1.11
0694	06/1980	TMI-Related Requirements for New Operating Licenses	7.1
0696	12/1980	Functional Criteria for Emergency Response Facilities	1A, 9.4, 9.5, 13.3

Table 1.9-23

NUREGs Referenced in ESBWR DCD

No.	Issue Date	Title	Comment/ Section where Referenced
0700 Rev. 2	03/2002	Human-System Interface Design Review Guidelines	1A, 6.4, 18.1
0711 Rev. 2	01/2004	Human Factors Engineering Program Review Model	7.1, 18.10, 14.3A
0718 Rev. 1	06/1981	Licensing Requirements for Pending Construction Permits and Manufacturing License Applications	1.9, 1A, 7.1, 8.1
0737	11/1980	Clarification of TMI Action Plan Requirements	1.1, 1.9, 1.10, 1.11, 1A, 1B, 5.4, 6.3, 7.1, 8.1, 9.3, 11.5, 12.3, 12.5, 13.2, 13.5, 16
0737 Supp.1	12/1982	Clarification of TMI Action Plan Requirements	1A, 1C, 13.5, 16, 18.1
0744 Rev. 1	10/1982	Resolution of the Task A-11 Reactor Vessel Materials Toughness Safety Issue	1.11
0763	05/1981	Guidelines for Confirmatory In-Plant Tests of Safety-Relief Valve Discharges for BWR Plants	1C, 5.2
0783	11/1981	Suppression Pool Temperature Limits for BWR Containments	1C
0800	Varies by SRP Section	Standard Review Plan for the Review of Safety Analysis Reports for Nuclear Power Plants, LWR Edition	Throughout
0808	8/1981	Mark II Containment Program Load Evaluation and Acceptance Criteria	1.11
0927 Rev. 1	03/1984	Evaluation of Water Hammer Occurrence in Nuclear Power Plants	1.11, 10.3, 10.4
0933	10/2006	A Prioritization of Generic Safety Issues (Main Report and Supplements 1-30)	1.11, 6.2, 6.4, 7.1, 7.2, 7.3, 7.4, 7.5, 7.6, 7.7, 7.8, 10.2, 19.1
1000	4/1983 8/1983	Generic Implications of ATWS Events at the Salem Nuclear Power Plant (Volumes 1 and 2)	1.11
1048 Supp. 6	07/1986	Safety Evaluation Report Relating to the Operation of Hope Creek Generating Station	10.2
1242 Vol. 3, Part 1	08/1994	NRC Review of Electric Power Research Institute's Advanced Light Water Reactor Utility Requirements Document	15.4

Table 1.9-23

NUREGs Referenced in ESBWR DCD

No.	Issue Date	Title	Comment/ Section where Referenced
1275 Vol. 2	1987	Operating Experience Feedback Report – Air System Problem	1C
1302	12/1991	Offsite Dose Calculation Manual Guidance, Standard. Radiological Effluent Controls for BWRs.	11.5
1344	1989	Erosion/Corrosion-Induced Pipe Wall Thinning in U.S. Nuclear Power Plants	10.3, 10.4
1367	11/1992	Functional Capability of Piping Systems	3.9
1434 Rev. 3.1	12/2005	Standard Technical Specifications General Electric Plants, BWR/6	1.9, 1.11, 1C, 16.0
1465	1995	Accident Source Terms for Light-Water Nuclear Power Plants	3H, 15.4, 15C
1482 Rev. 1		Guidelines for Inservice Testing at Nuclear Power Plants	3.9
1503	07/1994	Final Safety Evaluation Report Related to the Certification of the Advanced Boiling Water Reactor Design	3.5, 3.8, 15.0
1552	07/1996	Fire Barrier Penetration Seals in Nuclear Power Plants	9.5, 9A
1552 Supp 1	01/1999	Fire Barrier Penetration Seals in Nuclear Power Plants, Supplement 1	9A
1560	12/1997	Individual Plant Examination Program: Perspectives on Reactor Safety and Plant Performance, Volumes 1 to 5	19.2
1736	10/2001	Consolidated Guidance: 10 CFR Part 20 – Standard for Protection Against Radiation	12.1
1801 Rev. 1	09/2005	Generic Aging Lessons Learned (GALL) Report	3.8
CP-0065	08/85	Pressure Testing of Large Scale Torispherical Heads Subject to Knuckle Buckling	19B
CP-0095	06/88	Thermal Effects in Concrete Containment Analysis	19C
CR-0009	10/1978	Technological Bases for Models of Spray Washout of Airborne Contaminants in Containment Vessels	15.4
CR-0660	02/1979	Enhancement of Onsite Diesel Generator Reliability	1.9, 8.1
CR-1161	05/1980	Recommended Revisions to Nuclear Regulatory Commission Seismic Design Criteria	3.7
CR-1278	08/1983	Handbook of Human Reliability Analysis	15A
CR-1677	08/1985	Piping Benchmark Problems Dynamic Analysis Independent Support Motion Response Spectrum Method	3D
CR-1980	03/1981	Dynamic Analysis of Piping, Using the Structural Overlap Method	3.7

Table 1.9-23

NUREGs Referenced in ESBWR DCD

No.	Issue Date	Title	Comment/ Section where Referenced
CR-2137	06/1981	Realistic Seismic Design Margins of Pumps, Valves, and Piping	19C
CR-2861	11/1982	Image Analysis for Facility Siting: A Comparison of Low and High-Attitude Image Interpretability for Land Use/Land Cover Mapping	1.11
CR-2919	09/1982	XOQDOQ: Computer Program for the Meteorological Evaluation of Routine Effluent Releases at Nuclear Power Stations	2B, 12.2
CR-2963	06/1983	Planning Guidance for Nuclear Power Plant Decontamination	1.11
CR-3862	05/1985	Development of Transient Initiating Event Frequencies for Use in Probabilistic Risk Assessments	15A
CR-4013	04/1986	LADTAP II Technical Reference and User Guide	12.2
CR-4287	06/1985	Environmentally Assisted Cracking in Light Water Reactors: Annual Report, October 1983 – September 1984 (ANL-85-33)	5.2
CR-4513 Rev. 1	05/1994	Estimation of Fracture Toughness of Cast Stainless Steels During Thermal Aging in LWR Systems	5.2
CR-4653	03/1987	GASPAR II Technical Reference and User Guide	12.2
CR-5249	12/1989	Quantifying Reactor Safety Margins - Application of the Code Scaling, Applicability, and Uncertainty Evaluation Methodology to a Large-Break, Loss-of-Coolant Accident	1.5, 4D
CR-5341	10/1989	Round Robin Analysis of the Behavior of a 1:6 scale reinforced concrete containment model pressurized to Failure: Post-test Evaluations	19C
CR-5347	01/1989	Recommended Minimum Power Spectral Density Functions Compatible with NRC Regulatory Guide 1.60 Response Spectrum	3.7
CR-5582	02/1999	Lower Head Failure Experiments and Analyses	19C
CR-5750	02/1999	Rates of Initiating Events at US Nuclear Power Plants: 1987-1995	15A
CR-5950	12/1992	Iodine Evolution and pH Control	15C
CR-6049	08/1993	Piping Benchmark Problems for the General Electric ABWR	3D
CR-6083	08/1993	Reviewing Real-Time Performance of Nuclear Reactor Safety Systems	7.1
CR-6119	09/2005	MELCOR Computer Code Manuals	15.4
CR-6189	07/1996	A Simplified Model of Aerosol Removal by Natural Processes in Reactor Containments	15.4
CR-6303	12/1994	Method for Performing Diversity and Defense-in-Depth Analyses of Reactor Protection Systems	7.1, 7.8
CR-6400	01/1997	Human Factors Engineering (HFE) Insights For Advanced Reactors Based Upon Operating Experience	18.3

Table 1.9-23

NUREGs Referenced in ESBWR DCD

No.	Issue Date	Title	Comment/ Section where Referenced
CR-6604	04/1998	RADTRAD: A Simplified Model for Radionuclide Transport and Removal and Dose Estimation	15.4, 15B, 15C
CR-6639	03/1999	Seismic Analysis of a Prestressed Concrete Containment Vessel Model	19C
CR-6645	12/1999	Reevaluation of Regulatory Guidance on Modal Response Combination Methods for Seismic Response Spectrum Analysis	3.7
CR-6707	03/2001	Seismic Analysis of a Reinforced Concrete Containment Vessel Model	19C
CR-6728	10/2001	Technical Basis for Revision of Regulatory Guidance on Design Ground Motions: Hazard- and Risk-Consistent Ground Motion Spectra Guidelines	3.7
CR-6909	02/2007	Effect of LWR Coolant Environments on the Fatigue Life of Reactor Materials	3.9, 3D

1.10 SUMMARY OF COL ITEMS

For a Combined License Application (COLA) Final Safety Analysis Report (FSAR), a Combined License applicant referencing the ESBWR certified design is required to provide site-specific information, information related to operational program descriptions, and other information required to support construction and operation of an ESBWR standard design at a specific site. The description of information to be provided by the Combined License applicant is found in the DCD sections applicable to the specific information. Table 1.10-1 is a listing of the Combined License information items and the DCD location of the description of the information.

Table 1.10-1

Summary of COL Items

Item No.	Subject / Description of Item	Section
1.1-1-A	Establish Rated Electrical Output	1.1.2.7
1.3-1-A	Update Table 1.3-1	Table 1.3-1
1.7-1-H	Final Design Configuration Confirmation	Deleted
1.9-1-A	SRP Deviations	Deleted
1.9-2-A	Experience Information	Deleted
1.9-3-A	SRP and Regulatory Guide Applicability	Tables 1.9-20 and 1.9-21
1.11-1-A	Address Table 1.11-1 Items That Refer to Notes (2) and (7)	Table 1.11-1, Notes (2) and (7)
1C.1-1-A	Handling of Safeguards Information	Table 1C-1, No. 82-39
1C.1-2-A	Emergency Preparedness and Response Actions	Table 1C-2, No. 2005-02
2.0-1-A	Site Characteristics Demonstration	2.0
2.0-2-A	Site Location and Description Information in Accordance with SRP 2.1.1	Table 2.0-2
2.0-3-A	Site-Specific Exclusion Area Authority and Control Information in Accordance with SRP 2.1.2.	Table 2.0-2
2.0-4-A	Population Distribution Information in Accordance with SRP 2.1.3	Table 2.0-2
2.0-5-A	Identification of Potential Hazards in the Site Vicinity in Accordance with SRP 2.2.1 - 2.2.2	Table 2.0-2
2.0-6-A	Evaluation of Potential Accidents in Accordance with SRP 2.2.3	Table 2.0-2
2.0-7-A	Regional Climatology in Accordance with SRP 2.3.1	Table 2.0-2
2.0-8-A	Local Meteorology in Accordance with SRP 2.3.2	Table 2.0-2
2.0-9-A	Onsite Meteorological Measurement Programs in Accordance with SRP 2.3.3	Table 2.0-2
2.0-10-A	Short-Term Dispersion Estimates for Accidental Atmospheric Releases in Accordance with SRP 2.3.4	Table 2.0-2

Table 1.10-1

Summary of COL Items

Item No.	Subject / Description of Item	Section
2.0-11-A	Long-Term Diffusion Estimates in Accordance with SRP 2.3.5	Table 2.0-2
2.0-12-A	Hydraulic Description Maximum Ground Water Level in Accordance with SRP 2.4.1	Table 2.0-2
2.0-13-A	Floods in Accordance with SRP 2.4.2	Table 2.0-2
2.0-14-A	Probable Maximum Flood on Streams and Rivers in Accordance with SRP 2.4.3	Table 2.0-2
2.0-15-A	Potential Dam Failures in Accordance with SRP 2.4.4	Table 2.0-2
2.0-16-A	Probable Maximum Surge and Seiche Flooding in Accordance with SRP 2.4.5	Table 2.0-2
2.0-17-A	Probable Maximum Tsunami Flooding in Accordance with SRP 2.4.6	Table 2.0-2
2.0-18-A	Ice Effects in Accordance with SRP 2.4.7	Table 2.0-2
2.0-19-A	Cooling Water Canals and Reservoirs in Accordance with SRP 2.4.8	Table 2.0-2
2.0-20-A	Channel Diversions in Accordance with SRP 2.4.9	Table 2.0-2
2.0-21-A	Flooding Protection Requirements in Accordance with SRP 2.4.10	Table 2.0-2
2.0-22-A	Cooling Water Supply in Accordance with SRP 2.4.11	Table 2.0-2
2.0-23-A	Groundwater in Accordance with SRP 2.4.12	Table 2.0-2
2.0-24-A	Accidental Releases of Liquid Effluents in Ground and Surface Waters in Accordance with SRP 2.4.13	Table 2.0-2
2.0-25-A	Technical Specifications and Emergency Operation Requirements in Accordance with SRP 2.4.14	Table 2.0-2
2.0-26-A	Basic Geologic and Seismic Information in Accordance with SRP 2.5.1	Table 2.0-2
2.0-27-A	Vibratory Ground Motion in Accordance with SRP 2.5.2	Table 2.0-2
2.0-28-A	Surface Faulting in Accordance with SRP 2.5.3	Table 2.0-2
2.0-29-A	Stability of Subsurface Materials and Foundations in Accordance with SRP 2.5.4	Table 2.0-2
2.0-30-A	Stability of Slopes in Accordance with SRP 2.5.5	Table 2.0-2
2A.2-1-A	Confirmation of the ESBWR X/Q Values	2A.2.4

Table 1.10-1

Summary of COL Items

Item No.	Subject / Description of Item	Section
2A.2-2-A	Confirmation of the Reactor Building X/Q Values	2A.2.5
3.6.5-1-A	Pipe Break Analysis Results and Protection Methods	Deleted
3.9.9-1-A	Reactor Internals Vibration Analysis, Measurement and Inspection Program	3.9.2.4
3.9.9-2-A	ASME Class 2 or 3 or Quality Group D Components with 60-Year Design Life	3.9.3.1
3.9.9-3-A	Inservice Testing Programs	3.9.6 3.9.6.1.5 3.9.6.7
3.9.9-4-A	A Snubber Inspection and Test Program	3.9.3.7.1 (3)e
3.10.4-1-A	Dynamic Qualification Report	3.10.1.4
3.10.4-2-H	Equipment Qualification Records	Deleted
3.11-1-A	Environmental Qualification Document	3.11.4.4
3.11-2-H	Environmental Qualification Records	Deleted
4.3-1-A	Variances from Certified Design	4.3.3.1
4.4.7.1	Reactor Core Thermal and Hydraulic Design	Deleted
4.6-1-A	CRD and FMCRD Maintenance Procedures	Deleted
4A-1-A	Variances from Certified Design	4A.1
5.2-1-A	Preservice and In-service Inspection Program Description	5.2.4.11
5.2-2-A	Leak Detection Monitoring	5.2.5.9
5.2-3-A	Preservice and In-service Inspection Non-Destructive Examination Accessibility Plan Description	5.2.4
5.3-1-A	Pressure/Temperature Limits and Fracture Toughness Data	Deleted
5.3-2-A	Materials and Surveillance Capsule	5.3.1.8
6.1-1-A	Protective Coatings and Organic Materials	Deleted
6.2-1-H	Pipe Length from Containment to Inboard/Outboard Isolation Valve	Deleted
6.3-1-H	ECCS Testing Requirements	Deleted
6.3-2-H	Limiting Break Results	Deleted

Table 1.10-1

Summary of COL Items

Item No.	Subject / Description of Item	Section
6.4-1-A	Control Room Habitability Area (CRHA) Procedures and Training	6.4.4
6.4-2-A	Toxic Gas Analysis	6.4.5
6.6-1-A	Preservice Inspection (PSI) and Inservice Inspection (ISI) Program Description	6.6
6.6-2-A	PSI/ISI NDE Accessibility Plan Description	6.6
8.2.4-1-A	Transmission System Description	8.2.1.1
8.2.4-2-A	Switchyard Description	8.2.1.2.1
8.2.4-3-A	Normal Preferred Power	8.2.1.2
8.2.4-4-A	Alternate Preferred Power	8.2.1.2
8.2.4-5-A	Protective Relaying	8.2.1.2.1
8.2.4-6-A	Switchyard DC Power	8.2.1.2.1
8.2.4-7-A	Switchyard AC Power	8.2.1.2.1
8.2.4-8-A	Switchyard Transformer Protection	8.2.1.2.1
8.2.4-9-A	Stability and Reliability of the Offsite Transmission Power Systems	8.2.2.1
8.2.4-10-A	Interface Requirements	8.2.1.1
8.3.4-1-A	Safety-Related Battery Float and Equalizing Voltage Values	8.3.2.1.1
8.3.4-2-A	Identification and Monitoring of Underground or Inaccessible Power and Control Cables to the PSWS and DG Fuel Oil Transfer System Equipment That Have Accident Mitigating Functions	8.3.3.2
8A.2.3-1-A	Cathodic Protection System	8A.2.1
9.1-1-H	Dynamic and Impact Analyses of Fuel Storage Racks	Deleted
9.1-2-H	Fuel Storage Racks Criticality Analysis	Deleted
9.1-3-H	Fuel Racks Load Drop Analysis	Deleted
9.1-4-A	Fuel Handing Operations	9.1.1.7
9.1-5-A	Handling of Heavy Loads	9.1.5.8
9.2.1-1-A	Material Selection	9.2.1.2
9.2.5-1-A	Post Seven Day Makeup to Ultimate Heat Sink (UHS)	9.2.5

Table 1.10-1
Summary of COL Items

Item No.	Subject / Description of Item	Section
9.3.2-1-A	Post-Accident Sampling Program	9.3.2.2
9.3.9-1-A	Implementation of Hydrogen Water Chemistry	9.3.9.2
9.3.9-2-A	Hydrogen and Oxygen Storage and Supply	9.3.9.2
9.3.10-1-A	Oxygen Storage Facility	9.3.10.2
9.3.11-1-A	Determine Need for Zinc Injection System	9.3.11.2
9.3.11-2-A	Provide System Description for Zinc Injection System	9.3.11.4
9.5.1-1-A	Secondary Firewater Storage Source	9.5.1.4
9.5.1-2-A	Secondary Firewater Capacity	9.5.1.4
9.5.1-3-A	Yard Main Loop	Deleted
9.5.1-4-A	Piping and Instrument Diagrams	9.5.1.5
9.5.1-5-A	Fire Barriers	9.5.1.10
9.5.1-6-A	Smoke Control	9.5.1.11
9.5.1-7-A	Fire Hazards Analysis (FHA) Compliance Review	9.5.1.12
9.5.1-8-A	Fire Protection (FP) Program Description	9.5.1.15
9.5.1-9-A	FP License Changes	Deleted
9.5.1-10-A	Fire Brigade	9.5.1.15.4
9.5.1-11-A	Quality Assurance	9.5.1.15.9
9.5.2.5-1-A	Emergency Notification System	9.5.2.2
9.5.2.5-2-A	Grid Transmission Operator	9.5.2.2
9.5.2.5-3-A	Offsite Interfaces (1)	9.5.2.2
9.5.2.5-4-A	Offsite Interfaces (2)	9.5.2.2
9.5.2.5-5-A	Fire Brigade Radio System	9.5.2.2
9.5.4-1-A	Fuel Oil Capacity	9.5.4.2
9.5.4-2-A	Protection of Underground Portion	9.5.4.2
9A.7-1-A	Yard Fire Zone Drawings	9A.4.7
9A.7-2-A	Fire Hazards Analysis for Site Specific Areas	9A.4.7
10.2-1-A	Turbine Maintenance and Inspection Program	10.2.2.4 10.2.2.7 10.2.3.6

Table 1.10-1

Summary of COL Items

Item No.	Subject / Description of Item	Section
10.2-2-A	Turbine Missile Probability Analysis	10.2.3.8
10.4-1-A	Leakage (of Circulating Water Into the Condenser)	10.4.6.3
11.2-1-A	Implementation of IE Bulletin 80-10	11.2.2.3.3
11.2-2-A	Implementation of Part 20.1406	11.2.2.3.3
11.4-1-A	Solid Waste Management System Processing Subsystem Regulatory Guide Compliance	11.4.2.3.5
11.4-2-A	Compliance with IE Bulletin 80-10	11.4.2.3.5
11.4-3-A	Process Control Program	11.4.2.3.5 13.4
11.4-4-A	Temporary Storage Facility	11.4.1
11.4-5-A	Compliance with Part 20.1406	11.4.1
11.5-1-A	Sensitivity or Subsystem Lower Limit of Detection	11.5.4.7
11.5-2-A	Offsite Dose Calculation Manual	11.5.4.4 11.5.4.5 12.2.1.3 12.2.2.2 13.4
11.5-3-A	Process and Effluent Monitoring Program	11.5.4.6 13.4
11.5-4-A	Site Specific Offsite Dose Calculation	11.5.4.8
11.5-5-A	Instrument Sensitivities	11.5.4.9
12.1-1-A	Regulatory Guide 8.10	12.1.1.3.2
12.1-2-A	Regulatory Guide 1.8	12.1.1.3.3
12.1-3-A	Operational Considerations	12.1.3
12.1-4-A	Regulatory Guide 8.8	12.1.1.3.1
12.2-1-H	Reactor Startup Source	Deleted
12.2-2-A	Airborne Effluents and Doses	12.2.2.2
12.2-3-A	Liquid Effluents and Doses	12.2.2.4
12.2-4-A	Other Contained Sources	12.2.1.5
12.3-1-H	Facility Design Features	Deleted

Table 1.10-1

Summary of COL Items

Item No.	Subject / Description of Item	Section
12.3-2-A	Operational Considerations	12.3.4
12.3-3-H	Controlled Access	Deleted
12.3-4-A	Compliance with 10 CFR 20.1406	12.3.1.5.2
12.5-1-A	Equipment, Instrumentation, and Facilities	12.5.2
12.5-2-A	Compliance with 10 CFR Part 50.34 (f)(2)(xxvii) and NUREG-0737 Item III.D.3.3	12.5.2
12.5-3-A	Radiation Protection Program	12.3.1.3 12.5.3 13.4
13.1-1-A	Organizational Structure	13.1 9.5.1.15.3
13.2-1-A	Reactor Operator Training	13.2.1
13.2-2-A	Training for Non-Licensed Plant Staff	13.2.2
13.3-1-A	Identification of OSC and Communication Interfaces with Control Room and TSC	13.3
13.3-2-A	Identification of EOF and Communication Interfaces with Control Room and TSC	13.3
13.3-3-A	Decontamination Facilities	13.3
13.4-1-A	Operation Programs	13.4 9.5.1.15.2
13.4-2-A	Implementation Milestones	13.4
13.5-1-A	Administrative Procedures Development Plan	13.5.1
13.5-2-A	Plant Operating Procedures Development Plan	13.5.2
13.5-3-A	Emergency Procedures Development	13.5.2
13.5-4-A	Implementation of the Plant Procedures Plan	13.5.2
13.5-5-A	Procedures Included in Scope of Plan	13.5.2
13.5-6-A	Procedures for Calibration, Inspection and Testing	13.5.2
13.6-1-A	Physical Security Plan	Deleted
13.6-2-A	Contingency Plan	Deleted
13.6-3-A	Guard Force Training Plan	Deleted

Table 1.10-1

Summary of COL Items

Item No.	Subject / Description of Item	Section
13.6-4-A	Physical Security Systems Design	Deleted
13.6-5-A	Security System Testing and Maintenance	Deleted
13.6-6-A	Key Control	13.6.1.1.5
13.6-7-A	Redundancy and Equivalency of the Central Alarm Station and Secondary Alarm Station	13.6.3
13.6-8-A	No Single Act Requirement for Central Alarm Station and Secondary Alarm Station	13.6.3
13.6-9-A	Operational Alarm Response Procedures	13.6.1.1.3
13.6-10-A	Operational Surveillance Test Procedures	13.6.1.1.8
13.6-11-A	Maintenance Test Procedures	13.6.1.1.8
13.6-12-A	Operational Response Procedures to Security Events	13.6.3
13.6-13-A	Operational Alarm Response Procedures	13.6.1.1.3
13.6-14-A	Administrative Controls to Sensitive Cabinets	13.6.1.1.5
13.6-15-A	Administrative Controls to Sensitive Equipment	13.6.1.1.5
13.6-16-A	External Bullet Resisting Enclosures	13.6.3
13.6-17-A	Site-Specific Locations of Security Barriers	13.6.3
13.6-18-A	Ammunition for Armed Responders	13.6.3
13.6-19-A	Site-Specific Update of the ESBWR Safeguards Assessment Report	13.6.3
13.6-20-A	Physical Security ITAAC	13.6.3
14.2-1-A	Description – Initial Test Program Administration	14.2.2.1
14.2-2-A	Startup Administrative Manual	14.2.2.1
14.2-3-A	Test Procedures	14.2.2.2
14.2-4-A	Test Program Schedule and Sequence	14.2.7
14.2-5-A	Site-Specific Tests	14.2.9
14.2-6-A	Site-Specific Test Procedures	14.2.9
14.3-1-A	Emergency Planning Inspections, Tests, Analyses and Acceptance Criteria (ITAAC)	14.3.8
14.3-2-A	Site-Specific ITAAC	14.3.9

Table 1.10-1

Summary of COL Items

Item No.	Subject / Description of Item	Section
14.3A-1-1	Establish a Schedule for Design Acceptance Criteria ITAAC Closure	14.3A.1
15.2-1-A	Initial Core Design Anticipated Operational Occurrences (AOOs)	Deleted
15.2-2-H	Reload Core Design AOOs	Deleted
15.2-3-A	Assumptions	Deleted
15.3-1-A	Potentially Limiting Infrequent Events for Initial Core	Deleted
15.3-2-H	Potentially Limiting Infrequent Events for Reload Core Design Changes	Deleted
15.3-3-A	Control Rod Withdrawal Error During Startup	Deleted
15.3-4-A	Exclusion Area Boundary (EAB) X/Q Value	Deleted
15.3-5-A	Low Population Zone (LPZ) X/Q Values	Deleted
15.3-6-A	Control Room X/Q Values	Deleted
15.4-1-A	EAB X/Q Value	Deleted
15.4-2-A	LPZ X/Q Value	Deleted
15.4-3-A	Fuel Handling Accident	Deleted
15.4-4-A	Loss of Coolant Accident	Deleted
15.4-5-A	Main Steam Line Break Accident	Deleted
15.4-6-A	Feedwater Line Break Accident	Deleted
15.4-7-A	Instrument Line Break Accident	Deleted
15.4-8-A	RWCU/SDC Line Break Accident	Deleted
15.5-1-A	Station Blackout (SBO) Event for Specific Initial Core Design	Deleted
15.5-2-H	SBO Event for Reload Core Design	Deleted
16.0-1-A	COL Applicant Bracketed Items	16.0
16.0-2-H	COL Holder Bracketed Items	Deleted
17.2-1-A	QA Program for the Construction and Operations Phases	17.2
17.2-2-A	QA Program for Design Activities	17.2
17.3-1-A	Quality Assurance Program Document	17.3

Table 1.10-1

Summary of COL Items

Item No.	Subject / Description of Item	Section
17.4-1-A	Identifying Site-Specific Structures, Systems, and Components Within the Scope of the Reliability Assurance Program	17.4.1
17.4-2-A	Operation Reliability Assurance Activities	17.4.1
18.13-1-A	Milestone for Human Performance Monitoring Implementation	18.13.3
19.2.6-1-A	Seismic High Confidence Low Probability of Failure Margins	19.2.3.2.4

1.11 TECHNICAL RESOLUTIONS OF TASK ACTION PLAN ITEMS, NEW GENERIC ISSUES, NEW GENERIC SAFETY ISSUES AND CHERNOBYL ISSUES

Consistent with 10 CFR 52.47(a)(21), this section provides technical resolutions of Unresolved Safety Issues (USIs) and New Generic Issues, medium and high priority Generic Safety Issues (GSIs) that are identified in Table II of Reference 1.11-1, which are technically relevant to the ESBWR.

1.11.1 Approach

Each item or issue in Table II of Reference 1.11-1 is addressed in Table 1.11-1. 10 CFR 52.47(a)(21) requires the "Proposed technical resolutions of those Unresolved Safety Issues and medium- and high-priority Generic Safety Issues that are identified in the version of Reference 1.11-1 current on the date up to six months before the docket date of the application and that are technically relevant to the design," be included in a DCD. In accordance with 10 CFR 52.47(a)(21), those issues that are not technically relevant to the ESBWR design are not necessarily addressed in detail.

Table 1.11-1 uses a series of notes, which are consistent with the 10 CFR 52.47(a)(21) requirement and the Legend and Notes of Table II of Reference 1.11-1, to disposition many of the items/issues:

- For issues that are not applicable to the 10 CFR 52.47(a)(21) requirement, Table 1.11-1 only provides notes explaining those conclusions.
- For issues specifically addressed elsewhere in this document, Table 1.11-1 only provides cross-references to the applicable locations.
- For issues whose technical concerns are adequately addressed elsewhere in this document, Table 1.11-1 only provides cross-references to the applicable locations.
- For issues whose technical concerns are only partially addressed elsewhere in this document, Table 1.11-1 provides cross-references to the applicable locations and the additional information to provide their resolutions.
- For issues whose technical concerns are not addressed elsewhere in this document, Table 1.11-1 provides their technical resolutions.

1.11.2 COL Information

1.11-1-A Address Table 1.11-1 Items That Refer to Notes (2) and (7)

COL applicant will provide information to supplement the listings for all issues in Table 1.11-1 that refer to Notes (2) and (7). This includes items A-33, B-1, B-28, B-37 through B-43, C-16 and 184. (Table 1.11-1, Notes (2) and (7))

1.11.3 References

1.11-1 U.S. Nuclear Regulatory Commission, "A Prioritization of Generic Safety Issues," NUREG-0933 and its Supplements through Supplement 30, October 2006.

Table 1.11-1

Resolutions To NUREG-0933 Table II Task Action Plan Items, New Generic Issues, Human Factors Issues and Chernobyl Issues

Notes:

(1) Not applicable to the ESBWR design.

(2) Combined License applicant shall complete activities required by this action plan item (COL 1.11-1-A).

(3) Issue Dropped as a generic issue.

(4) Generically resolved with No New requirements, and thus, if required, would be addressed elsewhere in this document. [Equivalent to NUREG-0933 Table II, Note 3b]

(5) Issue is not a generic issue. [Equivalent to NUREG-0933 Table II, Note 5]

(6) Adequately addressed by other (generic) issue(s)/item(s).

(7) Environmental issue that is outside the scope of the DCD (COL 1.11-1-A).

(8) Resolution Resulted in the Establishment of New Regulatory Requirements (By Rule, SRP Change, or equivalent) and thus, if required, would be addressed elsewhere in this document. [Equivalent to NUREG-0933 Table II, Note 3a]

(9) Low Safety Priority Ranking.

Table 1.11-1 (continued)

Action Plan Item/Issue Number	Description	Associated Location(s) or Technical Resolution
THREE MILE ISLAND (TMI) ACTION PLAN ITEMS		
All	See Appendix 1A	Appendix 1A addresses all TMI action items that are listed in 10 CFR 50.34(f).
TASK ACTION PLAN ITEMS		
A-1	Water Hammer	This issue is considered resolved through compliance with appropriate revisions of Standard Review Plan (SRP) Subsections 3.9.3, 3.9.4, 5.4.6, 5.4.7, 6.3, 9.2.1, 9.2.2, 10.3 and 10.4.7, and with NUREG-0927, Rev. 1, consistent with the NRC resolution. As noted in Tables 1.9-3, 1.9-5, 1.9-6, 1.9-9, and 1.9-10, the ESBWR Standard Plant design complies with all of these SRP sections, and NUREG-0927, Rev. 1, respectively. The ESBWR design utilizes design features, such as keep-full system water lines, that preclude the occurrence of water hammer incidents.
A-2	Asymmetric Blowdown Loads on Reactor Primary Coolant Systems	(1) PWR issue. Discussion of blowdown loads in ESBWR is addressed in Sections 3.6, 3.8, Appendix 3F and Appendix 3G.
A-3	Westinghouse Steam Generator Tube Integrity	(1) There are no steam generators in the ESBWR design.
A-4	CE Steam Generator Tube Integrity	(1) There are no steam generators in the ESBWR design.
A-5	B&W Steam Generator Tube Integrity	(1) There are no steam generators in the ESBWR design.
A-6	Mark I Short-Term Program	(1) The ESBWR containment design is not classified as a Mark I containment. All suppression pool hydrodynamic loads have been accounted for in the design of the ESBWR containment. See Section 3.8 and Appendix 3G.

Table 1.11-1 (continued)

Action Plan Item/Issue Number	Description	Associated Location(s) or Technical Resolution
A-7	Mark I Long-Term Program	(8) Although the ESBWR containment design is not classified as a Mark I containment, this issue is still valid and applicable to the ESBWR containment. This issue is considered resolved through compliance with SRP Subsection 6.2.1.l.C and NUREG-0661, Supp. 1, consistent with the NRC resolution. As noted in Table 1.9-6, the ESBWR Standard Plant design complies with SRP Section 6.2.1.l.C, which in turn references NUREG-0661, Supp. 1. During a postulated LOCA, drywell-to-wetwell flow of gas and steam/water mixture produces hydrodynamic loading conditions on the suppression pool boundary. Also, SRV flow discharging into the suppression pool during SRV actuation produces hydrodynamic loading conditions on the pool boundary. The containment and its internal structures are designed to withstand all suppression pool dynamic loads, due to LOCA and SRV actuation events in combination with those from the postulated seismic events. The load combinations are described and specified in Section 3.8. A complete description and representation of these loads is provided in Appendix 3B.

Table 1.11-1 (continued)

Action Plan Item/Issue Number	Description	Associated Location(s) or Technical Resolution
A-8	Mark II Containment Pool Dynamic Loads Long-Term Program	(8) Although the ESBWR containment design is not classified as a Mark II containment, this issue is still valid and applicable to the ESBWR containment. This issue is considered resolved through compliance with SRP Section 6.2.1.1.C and NUREG-0808, consistent with the NRC resolution. As noted in Table 1.9-6, the ESBWR Standard Plant design complies with SRP Section 6.2.1.1.C, which references NUREG-0808. During a postulated LOCA, drywell-to-wetwell flow of gas and steam/water mixture produces hydrodynamic loading conditions on the suppression pool boundary. Also, SRV flow discharging into the suppression pool during SRV actuation produces hydrodynamic loading conditions on the pool boundary. The containment and its internal structures are designed to withstand all suppression pool dynamic loads, due to LOCA and SRV actuation events in combination with those from the postulated seismic events. The load combinations are described and specified in Section 3.8. A complete description and representation of these loads is provided in Appendix 3B.
A-9	ATWS	(8) Subsections 9.3.5 and 15.5.4. This issue is considered resolved through compliance with 10 CFR 50.62. As noted within Subsection 15.5.4, the ESBWR Standard Plant design meets 10 CFR 50.62. Analyses of ATWS events and design features for ATWS prevention and mitigation incorporated in the ESBWR Standard Plant design can be found within Subsection 15.5.4.

Table 1.11-1 (continued)

Action Plan Item/Issue Number	Description	Associated Location(s) or Technical Resolution
A-10	BWR Feedwater Nozzle Cracking	(8) Subsection 3.9.3.2. This issue is considered resolved through compliance with NUREG-0619, consistent with the NRC resolution, and compliance with Generic Letter (GL) 81-11.
A-11	Reactor Vessel Materials Toughness	(8) Subsections 5.3.1 through 5.3.3. This issue is considered resolved through compliance with NUREG-0744, Revision 1.
A-12	Fracture Toughness of Steam Generator and Reactor Coolant Pump Supports	(1) There are no steam generators or reactor coolant pumps in the ESBWR design.
A-13	Snubber Operability Assurance	(8) Subsections 3.9.3 and 3.9.3.7.1. This issue is considered resolved through compliance with Standard Review Plan (SRP) Section 3.9.3, consistent with the NRC resolution. As noted in Table 1.9-3, the ESBWR Standard Plant design complies with SRP Section 3.9.3. The criteria for the structural and mechanical performance parameters used for snubbers and the installation and inspection consideration for the snubbers are as follows: <u>Snubber Design and Testing</u> The snubbers are required by the pipe support design specification to be designed in accordance with ASME Code Section III, Subsection NF. The snubbers are tested to ensure proper performance during seismic and other reactor building vibration events, and under anticipated operational transient loads or other mechanical loads associated with the design requirements of the plant. <u>Snubber Pre-service Examination</u> The pre-service examination will verify the following: • There are no visible signs of damage or impaired operability as a result of storage,

Table 1.11-1 (continued)

Action Plan Item/Issue Number	Description	Associated Location(s) or Technical Resolution
		handling, or installation. • The snubber load rating, location, orientation, position setting, and configuration are according to design drawings and specifications. • Snubbers are not seized, frozen or jammed. • Adequate swing clearance is provided to allow snubber movements. • If applicable, fluid is to the recommended level and is not to be leaking from the snubber system. • Structural components (e.g., pins, fasteners) are installed correctly. If the period between the initial pre-service examination and initial system pre-operational tests exceeds six months, reexaminations of the first, fourth, and fifth items are performed. Snubbers that are installed incorrectly or otherwise fail to meet the above requirements will be repaired or replaced and re-examined in accordance with the above criteria. Refer to Subsection 3.9.3.7.1 for further details.
A-14	Flaw Detection	(3)
A-15	Primary Coolant System Decontamination and Steam Generator Chemical Cleaning	(8) Issue resolved with publication of decontamination criteria in NUREG/CR-2963.
A-16	Steam Effects on BWR Core Spray Distribution	(1) There is no core spray in the ESBWR design.
A-17	Systems Interactions in Nuclear Power Plants	(4) See Appendix 19A, Section 19A.6, for further details regarding this issue as part of the discussion of Regulatory Treatment of Non-Safety Systems (RTNSS).
A-18	Pipe Rupture Design Criteria	(3)

Table 1.11-1 (continued)

Action Plan Item/Issue Number	Description	Associated Location(s) or Technical Resolution
A-19	Digital Computer Protection System	(5) Addressed by compliance with RG 1.152. As noted in Table 1.9-21, the ESBWR Standard Plant design complies with RG 1.152.
A-20	Impacts of the Coal Fuel Cycle Description	(5)
A-21	Main Steam Line Break Inside Containment – Evaluation of Environmental Conditions for Equipment Qualification	(3)
A-22	PWR Main Steam Line Break – Core, Reactor Vessel, and Containment Building Response	(1) These are PWR issues that do not apply to the ESBWR design.
A-23	Containment Leak Testing	(5) Subsection 6.2.6
A-24	Qualification of Class 1E Safety-Related Equipment	(8) Section 3.11. This issue is considered resolved through compliance with 10 CFR 50.49. As noted in Subsection 3.11.3, the ESBWR Standard Plant design meets the requirements of 10 CFR 50.49. Section 3.11 documents the qualification methods and procedures employed to demonstrate the capability of electrical equipment to perform their required functions when exposed to the environmental conditions in their respective locations. Limiting design conditions include normal operating, abnormal operating, test, accident, and post-accident conditions.

Table 1.11-1 (continued)

Action Plan Item/Issue Number	Description	Associated Location(s) or Technical Resolution
A-25	Non-Safety Loads on Class 1E Power Sources	(8) This issue is considered resolved through compliance with Regulatory Guide (RG) 1.75, consistent with the NRC resolution. As noted in Table 1.9-21a and Subsections 7.1.6, 8.1.5.2.4 and 8.3.2.2.2, the ESBWR Standard Plant design complies with RG 1.75. Refer to Subsections 7.1.6, 8.1.3.3, 8.3.1.4, 8.1.5.2.4 and 8.3.2.2.2 for further details.
A-26	Reactor Vessel Pressure Transient Protection	(1) This is a PWR issue that does not apply to the ESBWR design.
A-27	Reload Applications	(5)
A-28	Increase in Spent Fuel Pool Storage Capacity	(8) ESBWR design incorporates high-density racks for storage of spent fuel. See Subsection 9.1.2 for further details.
A-29	Nuclear Power Plant Design for the Reduction of Vulnerability to Industrial Sabotage	(4)
A-30	Adequacy of Safety-Related DC Power Supplies	(6) Issue integrated into the resolution of Issue 128.

Table 1.11-1 (continued)

Action Plan Item/Issue Number	Description	Associated Location(s) or Technical Resolution
A-31	RHR Shutdown Requirements	(8) Subsections 5.4.6, 5.4.7, 5.4.8. This issue is considered resolved through compliance with Standard Review Plan (SRP) Section 5.4.7, consistent with the NRC resolution. As noted in Table 1.9-5, the ESBWR Standard Plant design complies with SRP Section 5.4.7. The ESBWR does not have an historical RHR system. For normal shutdown and cooldown, residual and decay heat is removed via the main condenser and the RWCU/SDC System (refer to Subsection 5.4.8). The ICS provides cooling of the reactor when the RCPB becomes isolated following a scram during power operations. The ICS automatically removes residual and decay heat to limit reactor pressure within safety limits when the reactor isolation occurs (refer to Subsection 5.4.6).
A-32	Missile Effects	(6) Addressed in Items A-37, A-38 and B-68.
A-33	NEPA Review of Accident Risks	(7)
A-34	Instruments for Monitoring Radiation and Process Variables During Accidents	(6) Resolution implemented via TMI Action Plan Item II.F.3. See Appendix 1A.
A-35	Adequacy of Offsite Power Systems	(8) Subsections 8.1.2.2, 8.1.5.1, 8.1.6 and Section 8.2. This issue is considered resolved through compliance with Standard Review Plan (SRP) Section 8.3.1, consistent with the NRC resolution. As noted in Table 1.9-8, the ESBWR Standard Plant design complies with SRP Section 8.3.1.

Table 1.11-1 (continued)

Action Plan Item/Issue Number	Description	Associated Location(s) or Technical Resolution
A-36	Control of Heavy Loads Near Spent Fuel	(8) This issue is considered resolved through compliance with Standard Review Plan (SRP) Section 9.1.5 and NUREG-0612, consistent with the NRC resolution. As noted in Table 1.9-9, the ESBWR Standard Plant design complies with SRP Section 9.1.5, which references NUREG-0612. The equipment utilized in the ESBWR Overhead Heavy Load Handling (OHLH) Systems, described in Subsection 9.1.5, are designed with consideration of radioactivity release, criticality accidents, inability to cool fuel within the reactor vessel or within the spent fuel pool, or prevention of safe shutdown of the reactor. Descriptions of the designs of the reactor building crane and other overhead load handling systems can be found in Subsection 9.1.5.2. In addition, see Subsection 9.1.4.18 for the confirmatory spent fuel rack load drop analysis, which includes consideration of equipment maintenance procedures; equipment inspection; safe load paths and routing plans; heavy load handling operations controls; and operator qualification, training, and control.
A-37	Turbine Missiles	(3)
A-38	Tornado Missiles	(3)

Table 1.11-1 (continued)

Action Plan Item/Issue Number	Description	Associated Location(s) or Technical Resolution
A-39	Determination of Safety Relief Valve Pool Dynamic Loads and Temperature Limits	(8) Appendix 3B. Although the ESBWR containment design is not classified as a Mark I, II or III containment, this issue is applicable to the ESBWR containment, because it is of the pressure-suppression type. This issue is considered resolved through compliance with Standard Review Plan (SRP) Section 6.2.1.l.C. As noted in Table 1.9-6, the ESBWR Standard Plant design complies with SRP Section 6.2.1.l.C. During a postulated LOCA, drywell-to-wetwell flow of gas and steam/water mixture produces hydrodynamic loading conditions on the suppression pool boundary. Also, SRV flow discharging into the suppression pool during SRV actuation produces hydrodynamic loading conditions on the pool boundary. The containment and its internal structures are designed to withstand all suppression pool dynamic loads, due to LOCA and SRV actuation events in combination with those from the postulated seismic events. The load combinations are described and specified in Section 3.8. A complete description of and diagrammatic representation of these loads is provided in Appendix 3B.
A-40	Seismic Design Criteria	(8) Sections/Subsection 3.2, 3.7, 3.8, 3.9.2.2, 3.10, and Appendices 3A, 3C and 3G. This issue is considered resolved through compliance with SRP Subsections 2.5.2, 3.7.1, 3.7.2 and 3.7.3, consistent with the NRC resolution. As noted in Tables 1.9-2 and 1.9-3 the ESBWR Standard Plant design complies with SRP Subsections 2.5.2, 3.7.1, 3.7.2 and 3.7.3.
A-41	Long-Term Seismic Program	(4)

Table 1.11-1 (continued)

Action Plan Item/Issue Number	Description	Associated Location(s) or Technical Resolution
A-42	Pipe Cracks in Boiling Water Reactors	(8) Section 5.2. This issue is considered resolved through compliance with NUREG-0313, Rev. 2, consistent with the NRC resolution, and compliance with Generic Letter (GL) 88-01. As noted in Subsection 5.2.3.4.1, the ESBWR Standard Plant design complies with NUREG-0313. The ESBWR utilizes designs, materials and processes that will prevent IGSCC. This is accomplished with materials resistant to IGSCC (e.g., Type 316 Nuclear Grade stainless steel and stabilized nickel-base Alloy 600M and 182M), limits on sensitizing operations, heat treatment after sensitizing, and elimination of crevice conditions.
A-43	Containment Emergency Sump Performance	(1) The ESBWR relies on passive methods rather than pumps for preventing core melt following a LOCA event.
A-44	Station Blackout	(1) Subsection 15.5.5. The ESBWR does not require emergency AC power to achieve safe shutdown. Therefore, this issue is not applicable to the ESBWR Standard Plant design.
A-45	Shutdown Decay Heat Removal Requirements	(4) The ESBWR capability in response to the NRC Policy Statement on Severe Accidents encompasses the NRC requirements for resolution of USI A-45. Therefore, this issue is considered resolved for the ESBWR Standard Plant design.
A-46	Seismic Qualification of Equipment in Operating Plants	(8) Seismic qualification of ESBWR equipment is described in Sections 3.7 and 3.10.

Table 1.11-1 (continued)

Action Plan Item/Issue Number	Description	Associated Location(s) or Technical Resolution
A-47	Safety Implications of Control Systems	(8) Addressed throughout Chapter 7. The automatic reactor vessel overfill protection is a feature of the Feedwater Control System (FWCS) described in Subsection 7.7.3. If the reactor water level rises to Level 8, then equipment protective action will trip the main turbine and reduce feedwater demand to zero. The feedwater pumps will be tripped by nonsafety-related signals if the water level continues to rise to Level 9. The trip logic for the FWCS overfill protection is provided by the N-DCIS with input from the Nuclear Boiler System instrumentation. In addition, the main feedwater lines are isolated by safety-related signals if the reactor water level rises to Level 8 as described in Subsections 5.2.5.2.1 and 5.4.5.3. The ESBWR Standard Plant Technical Specifications (Chapter 16) provide surveillance requirements for the "reactor vessel water level – high, Level 8" function of the RPS Instrumentation. This issue is considered resolved for the ESBWR Standard Plant design.
A-48	Hydrogen Control Measures and Effects of Hydrogen Burns on Safety Equipment	(8) Subsection 6.2.5. The ESBWR containment is inerted and per 10 CFR 50.34(f)(2)(ix) can withstand the pressure and energy addition from 100% fuel cladding metal-water reaction. Therefore, this issue is resolved for the ESBWR Standard Plant design.
A-49	Pressurized Thermal Shock	(1) This is a PWR issue that is not applicable to the ESBWR design.
B-1	Environmental Technical Specifications	(7)
B-2	Forecasting Electricity Demand	(8)
B-3	Event Categorization	(3)
B-4	ECCS Reliability	(6) Covered under TMI Action Plan Item II.E.3.2.

Table 1.11-1 (continued)

Action Plan Item/Issue Number	Description	Associated Location(s) or Technical Resolution
B-5	Ductility of Two-Way Slabs and Shells and Buckling Behavior of Steel Containments	(4)
B-6	Loads, Load Combinations, Stress Limits	(4, 6, and 8) ESBWR loads and load combinations are addressed in Subsections 3.8.1.3, 3.8.2.3, 3.8.3.3, 3.8.4.3, 3.8.5.3, 3.9.2.2, 3.9.4.3, Appendices 3B and 3F. Resolution covered in Issue 119.1.
B-7	Secondary Accident Consequence Modeling	(3)
B-8	Locking out of ECCS Power-Operated Valves	(3)
B-9	Electrical Cable Penetrations of Containment	(4)
B-10	Behavior of BWR Mark III Containments	(8) Although the ESBWR containment design is not classified as a Mark III containment, this issue is applicable to the ESBWR containment, because it is of the pressure-suppression type. However, the various core-cooling systems (e.g., ICS and GDCS) do not take suction from the suppression pool. These systems utilize dedicated pools. This issue is considered resolved through compliance with Standard Review Plan (SRP) Section 6.2.1.1.C, consistent with the NRC resolution. As noted in Table 1.9-6, the ESBWR Standard Plant design complies with SRP Section 6.2.1.1.C, Rev. 6. During a postulated LOCA, drywell-to-wetwell flow of gas and steam/water mixture produces hydrodynamic loading conditions on the suppression pool boundary. Also, SRV flow discharging into the suppression pool during SRV actuation produces hydrodynamic loading conditions on the pool boundary.

Table 1.11-1 (continued)

Action Plan Item/Issue Number	Description	Associated Location(s) or Technical Resolution
		The containment and its internal structures are designed to withstand all suppression pool dynamic loads, due to LOCA and SRV actuation events in combination with those from the postulated seismic events. The load combinations are described and specified in Section 3.8. A complete description of and diagrammatic representation of these loads is provided in Appendix 3B.
B-11	Subcompartment Standard Problems	(5)
B-12	Containment Cooling Requirements (Non-LOCA)	(4) Subsections 6.2.2 and 7.3.2 describe the safety-related containment cooling system (PCCS). Subsections 9.2.7 and 9.4.8 describe the systems involved in normal containment cooling. A loss of normal containment cooling does not impact the operability of the safety-related PCCS to perform this function or the ability to place the ESBWR in a safe shutdown condition. The PCCS is a passive system that does not have instrumentation, control logic or power-actuated valves, and does not need or use electrical power for its operation.
B-13	Marviken Test Data Evaluation	(5)
B-14	Study of Hydrogen Mixing Capability in Containment Post-LOCA	(6) Covered under Item A-48.
B-15	CONTEMPT Computer Code Maintenance	(3)
B-16	Protection Against Postulated Piping Failures in Fluid Systems Outside Containment	(6) Issue incorporated into Item A-18.

Table 1.11-1 (continued)

Action Plan Item/Issue Number	Description	Associated Location(s) or Technical Resolution
B-17	Criteria for Safety-Related Operator Actions	(4) The ESBWR design satisfies the NRC requirements concerning automation of safety-related operator actions and operator response times. The ESBWR resolution is consistent with the ALWR resolution. For example, the ESBWR design requires no operator action earlier than 72 hours for any design basis accidents. The ESBWR design has eliminated the need for operator actions for several accidents/transients. In addition, advanced displays are utilized in the control room for monitoring and alarm functions for safety-related and nonsafety-related systems. Therefore, this issue is resolved for the ESBWR Standard Plant design.
B-18	Vortex Suppression Requirements for Containment Sumps	(1, 6) Issue is covered by Item A-43. ESBWR does not obtain ECCS water from containment sumps.
B-19	Thermal-Hydraulic Stability	(4)
B-20	Standard Problem Analysis	(5)
B-21	Core Physics	(3)
B-22	LWR Fuel	(3)
B-23	LMFBR Fuel	(1, 3) The ESBWR is not an LMFBR.
B-24	Seismic Qualification of Electrical and Mechanical Equipment	(6) Issue is covered by Item A-46.
B-25	Piping Benchmark Problems	(5)
B-26	Structural Integrity of Containment Penetrations	(4)
B-27	Implementation and Use of Subsection NF	(5)

Table 1.11-1 (continued)

Action Plan Item/Issue Number	Description	Associated Location(s) or Technical Resolution
B-28	Radionuclide/ Sediment Transport Program	(7)
B-29	Effectiveness of Ultimate Heat Sinks	(5)
B-30	Design Basis Floods and Probability	(5)
B-31	Dam Failure Model	(3, 5)
B-32	Ice Effects on Safety-Related Water Supplies	(6) Addressed in the evaluation of Issue 153.
B-33	Dose Assessment Methodology	(5)
B-34	Occupational Radiation Exposure Reduction	(6) This item is covered under TMI Action Plan Item III.D.3.1, which was resolved with no new requirements being established.
B-35	Confirmation of Appendix I Models for Calculations of Releases of Radioactive Materials in Gaseous and Liquid Effluents from Light Water-Cooled Power Reactors	(5)

Table 1.11-1 (continued)

Action Plan Item/Issue Number	Description	Associated Location(s) or Technical Resolution
B-36	Develop Design, Testing, and Maintenance Criteria for Atmosphere Cleanup System Air Filtration and Adsorption Units for Engineered Safety Features Systems and for Normal Ventilation Systems	(8) The ESBWR engineered safety features (ESFs) do not require a separate ventilation system. The only ESBWR filter system that performs safety-related functions following a design basis accident (DBA) serves the control room. The control room is provided with a redundant set of safety-related Emergency Filter Units (EFUs) to maintain a safe control room atmosphere following a DBA as discussed in Section 6.4. The EFUs are 100% capacity redundant units designed and tested to meet the requirements of Regulatory Guide 1.52. Therefore, this issue, as it applies to ESF ventilation system air filtration and adsorption units, is resolved through compliance with Regulatory Guide 1.52 for the safety-related Control Room HVAC components. As noted in Tables 1.9-21 and 1.9-21a for RG 1.52, use of a passive plant-specific physically-based source term eliminates the need for additional systems. This issue, as it applies to normal ventilation system air filtration and adsorption units, is applicable to ESBWR and is considered resolved through compliance with Regulatory Guide 1.140, consistent with the NRC resolution. As noted in Table 1.9-21 and Subsection 14.2.3, the ESBWR Standard Plant design complies with RG 1.140. Design details of the normal ventilation system air filtration and adsorption units for the control room area, spent fuel pool area, radwaste area, turbine building, and reactor building can be found in Subsections 9.4.1, 9.4.2, 9.4.3, 9.4.4, and 9.4.6, respectively.
B-37	Chemical Discharges to Receiving Waters	(5, 7)
B-38	Reconnaissance Level Investigations	(2, 3) Issue is addressed in site-specific environmental impact documentation.
B-39	Transmission Lines	(2, 3) Issue is addressed in site-specific environmental impact documentation.

Table 1.11-1 (continued)

Action Plan Item/Issue Number	Description	Associated Location(s) or Technical Resolution
B-40	Effects of Power Plant Entrainment on Plankton	(2, 3) Issue is addressed in site-specific environmental impact documentation.
B-41	Impacts on Fisheries	(2, 3) Impact of power plant operation on fishery resources is addressed in site-specific environmental impact documentation.
B-42	Socioeconomic Environmental Impacts	(7)
B-43	Value of Aerial Photographs for Site Evaluation	(2, 7) Work completed to date on this issue is published in NUREG/CR-2861. The extent to which aerial photography was used is addressed in site-specific environmental impact documentation.
B-44	Forecasts of Generating Costs of Coal and Nuclear Plants	(4)
B-45	Need for Power-Energy Conservation	(6) This issue is covered in Item B-2
B-46	Costs of Alternatives in Environmental Design	(3)
B-47	Inservice Inspection of Supports – Classes 1, 2, 3, and MC Components	(3)
B-48	BWR Control Rod Drive Mechanical Failures	(8) The control rod drives used in the ESBWR design take into account the resolution of this item. See Subsection 4.5.1.
B-49	Inservice Inspection Criteria and Corrosion Prevention Criteria for Containments	(5)
B-50	Post-Operating Basis Earthquake Inspection	(1, 9) An Operating Basis Earthquake is no longer required to be considered in the licensing process.

Table 1.11-1 (continued)

Action Plan Item/Issue Number	Description	Associated Location(s) or Technical Resolution
B-51	Assessment of Inelastic Analysis Techniques for Equipment and Components	(6) This item is covered by Item A-40.
B-52	Fuel Assembly Seismic and LOCA Responses	(6) This item is covered by Item A-2.
B-53	Load Break Switch	(5, 8) See Subsections 8.1.2.2, 8.1.5.2.1 and 8.2.1.2.
B-54	Ice Condenser Containments	(1) The ESBWR does not have an ice condenser containment.
B-55	Improved Reliability of Target Rock Safety Relief Valves	(4) ESBWR SRV reliability is assured through proper design, inspection, and testing. The ESBWR overpressure protection system (i.e., SRVs) is designed to satisfy the requirements of Section III of the ASME Boiler and Pressure Vessel Code. The SRV malfunctions are addressed in Chapter 15, and the results show that in the case of an inadvertent SRV opening, the resulting transient is a mild depressurization and produces no significant challenge to the RCPB, containment, or integrity of the fuel. The inspection and testing of applicable SRVs utilizes a quality assurance program, which complies with Appendix B of 10 CFR 50. The SRVs are tested in accordance with quality control procedures to detect defects and to provide operability prior to installation. The valve manufacturer certifies that the design and performance requirements have been met. After installation at the plant, valve operability is verified during the preoperational test program as discussed in Subsection 14.2.8.1.1. The external and flange seating surfaces of the SRVs are 100% visually inspected whenever any valve is removed for maintenance or bench testing during normal plant shutdowns.

Table 1.11-1 (continued)

Action Plan Item/Issue Number	Description	Associated Location(s) or Technical Resolution
B-56	Diesel Reliability	(1) The ESBWR uses passive safety-related systems that do not rely on availability of diesel generators.
B-57	Station Blackout	(1) This issue is covered in Item A-44.
B-58	Passive Mechanical Failures	(4)
B-59	(N-1) Loop Operation in BWRs and PWRs	(1) The ESBWR does not contain loops for reactor coolant flow.
B-60	Loose Parts Monitoring Systems	(4) Subsection 4.4.5
B-61	Allowable ECCS Equipment Outage Periods	(4)
B-62	Reexamination of Technical Bases for Establishing SLs, LSSSs, and Reactor Protection System Trip Functions	(3, 5)
B-63	Isolation of Low Pressure Systems Connected to the Reactor Coolant Pressure Boundary	(8) This issue is considered resolved through compliance with the latest revision of Standard Review Plan (SRP) Section 3.9.6. As noted in Table 1.9-3, the ESBWR Standard Plant design complies with SRP Section 3.9.6. Subsection 7.6.1 describes high pressure/low pressure interlocks to prevent overpressurization of low pressure systems which are connected to high pressure systems.

Table 1.11-1 (continued)

Action Plan Item/Issue Number	Description	Associated Location(s) or Technical Resolution
		Portions of the GDCS piping are considered part of the reactor coolant boundary and portions of the piping connect to the low pressure GDCS pools. Positive means are provided in the system design to prevent reactor pressure from being transmitted to the low pressure portion of the GDCS. Both mechanical means of isolation and system interlocks ensure that high pressure is not transmitted to the low pressure portions of the system. The only other high pressure/low pressure interface is the LPCI mode of the nonsafety-related Fuel and Auxiliary Pools Cooling System (FAPCS), which is described in Subsection 9.1.3.
B-64	Decommissioning of Reactors	(8) This issue is considered resolved through the issuance of 10 CFR 50.82, which provides regulations governing the termination of licenses. Decommissioning is addressed as the unit approaches the end of its lifetime. The methods and procedures to be used for decontamination and for disposal of radioactive materials will provide reasonable assurance that the dismantling and disposal will safety. Subsection 12.3.1.5 describes ESBWR not adversely affect public health and design procedures for operation that minimize contamination and facilitate decommissioning.
B-65	Iodine Spiking	(3)

Table 1.11-1 (continued)

Action Plan Item/Issue Number	Description	Associated Location(s) or Technical Resolution
B-66	Control Room Infiltration Measurements	(8) This issue is considered resolved through compliance with Standard Review Plan (SRP) Sections 6.4 and 9.4.1. As noted in Table 1.9-6 and 1.9-9, the ESBWR Standard Plant design complies with SRP Sections 6.4 and SRP 9.4.1. Safe occupancy of the control room during abnormal conditions is provided for in the design. Adequate shielding is provided to maintain tolerable radiation levels in the control room in the event of a design basis accident for the duration of the accident. The control room ventilation system has redundant equipment and includes radiation and smoke detectors with appropriate alarms and interlocks. If any hazards exist at the normal control room ventilation intake, habitability is assured by an Emergency Filter Unit (EFU), which upon isolation of the control room habitability area provides a positive filtered air purge. In the unlikely event that the control room must be vacated and access is restricted, instrumentation and controls are provided outside the control room, which can be utilized to initiate reactor shutdown, maintain a safe shutdown condition and achieve subsequent cold shutdown of the reactor.
B-67	Effluent and Process Monitoring Instrumentation	(6, 8) One subtask covered under TMI Action Plan Item III.D.2.1. The remaining subtasks for this issue are considered resolved through compliance with Standard Review Plan (SRP) Sections 11.3, 11.4 and 15.7.3. As noted in Table 1.9-11 and 1.9-15, the ESBWR Standard Plant design complies with SRP Sections 11.3, 11.4 and 15.7.3.
B-68	Pump Overspeed During LOCA	(1) There are no recirculation pumps in the ESBWR design.
B-69	ECCS Leakage Ex-Containment	(6) This issue is covered by TMI Action Plan Item III.D.1.1. See Appendix 1A.

Table 1.11-1 (continued)

Action Plan Item/Issue Number	Description	Associated Location(s) or Technical Resolution
B-70	Power Grid Frequency Degradation and Effect on Primary Coolant Pumps	(1) There are no primary coolant pumps in the ESBWR design.
B-71	Incident Response	(6) Covered in TMI Action Plan Item III.A.3.1
B-72	Health Effects and Life-Shortening from Uranium and Coal Fuel Cycles	(5)
B-73	Monitoring for Excessive Vibration Inside the Reactor Pressure Vessel	(6) This issue is covered in Item C-12.
C-1	Assurance of Continuous Long-Term Capability of Hermetic Seals on Instrumentation and Electrical Equipment	(8) This issue is considered resolved through compliance with NRC Memorandum and Order CLI-80-21 (dated May 27, 1980) and NUREG-0588, consistent with the NRC resolution. Those requirements have now been incorporated into SRP 3.11. Refer to Section 3.11 for further details on qualification of safety-related electrical equipment.
C-2	Study of Containment Depressurization by Inadvertent Spray Operation to Determine Adequacy of Containment External Design Pressure	(1) The ESBWR design does not require/have a wetwell containment spray. Drywell spray requires manual initiation for ESBWR and is not credited in any analysis.
C-3	Insulation Usage within Containment	(6) Addressed in the resolution of Issue A-43.
C-4	Statistical Methods for ECCS Analysis	(8) The ESBWR analyses in Subsection 6.3.3 make use of statistical methodology.
C-5	Decay Heat Update	(8) The ESBWR analysis in Subsections 6.2.1.1.3 and 6.3.3 makes use of the improved decay heat model.

Table 1.11-1 (continued)

Action Plan Item/Issue Number	Description	Associated Location(s) or Technical Resolution
C-6	LOCA Heat Sources	(8)
C-7	PWR System Piping	(1) This is a PWR issue that is not applicable to ESBWR.
C-8	Main Steam Line Leakage Control Systems	(4)
C-9	RHR Heat Exchanger Tube Failures	(3)
C-10	Effective Operation of Containment Sprays in a LOCA	(1) The ESBWR design does not require/have a wetwell containment spray. Drywell spray requires manual initiation for ESBWR and is not credited in any analysis.
C-11	Assessment of Failure and Reliability of Pumps and Valves	(4)
C-12	Primary System Vibration Assessment	(4)
C-13	Non-Random Failures	(6) This issue is addressed in issues A-9, A-17, A-30, A-35, B-56 and B-57.
C-14	Storm Surge Model for Coastal Sites	(3)
C-15	NUREG Report for Liquid Tank Failure Analysis	(3)
C-16	Assessment of Agricultural Land in Relation to Power Plant Siting and Cooling System Selection	(2, 3) Issue is addressed in site-specific environmental impact documentation.
C-17	Interim Acceptance Criteria for Solidification Agents for Radioactive Solid Wastes	(8) This issue is considered resolved through compliance with 10 CFR 61.56, consistent with the NRC resolution. As noted in Subsection 11.4.1, the ESBWR Standard Plant design meets the requirements of 10 CFR 61.

Table 1.11-1 (continued)

Action Plan Item/Issue Number	Description	Associated Location(s) or Technical Resolution
D-1	Advisability of a Seismic Scram	(3) The ESBWR design does not include a seismic scram.
D-2	Emergency Core Cooling System Capability for Future Plants	(3)
D-3	Control Rod Drop Accident	(4) See Subsection 15.4.6 for discussion of this event.
NEW GENERIC ISSUES		
Issue 1	Failures in Air-Monitoring, Air-Cleaning, and Ventilating Systems	(3)
Issue 2	Failure of Protective Devices on Essential Equipment	(3)
Issue 3	Set Point Drift in Instrumentation	(4)
Issue 4	End-of-Life and Maintenance Criteria	(4)
Issue 5	Design Check and Audit of Balance-of-Plant Equipment	(6) Issue addressed under TMI Action Plan Item I.F.1. See Appendix 1A.
Issue 6	Separation of Control Rod from its Drive and BWR High Rod Worth Events	(4) See Section 15.4.6
Issue 7	Failures Due to Flow-Induced Vibrations	(3)
Issue 8	Inadvertent Actuation of Safety Injection in PWRs	(1) This is a PWR issue that is not applicable to ESBWR.
Issue 9	Reevaluation of Reactor Coolant Pump Trip Criteria	(1) There are no reactor coolant pumps in the ESBWR design.

Table 1.11-1 (continued)

Action Plan Item/Issue Number	Description	Associated Location(s) or Technical Resolution
Issue 10	Surveillance and Maintenance of TIP Isolation Valves and Squib Charges	(1) There is no Traversing In-Core Probe (TIP) system in ESBWR. The Fixed In-Core Calibration System is applied as described in Subsection 7.7.6.
Issue 11	Turbine Disc Cracking	(6) This issue is covered by Item A-37.
Issue 12	BWR Jet Pump Integrity	(1) There are no jet pumps in the ESBWR design.
Issue 13	Small-Break LOCA from Extended Overheating of Pressurizer Heaters	(1) There is no pressurizer in the ESBWR design.
Issue 14	PWR Pipe Cracks	(1) This is a PWR issue that is not applicable to ESBWR.
Issue 15	Radiation Effects on Reactor Vessel Supports	(4) Section 5.3
Issue 16	BWR Main Steam Isolation Valve Leakage Control Systems	(6) Issue has been combined with Item C-8
Issue 17	Loss of Offsite Power Subsequent to a LOCA	(3)
Issue 18	Steam-Line Break with Consequential Small LOCA	(1) PWR issue resolved in accordance with TMI Action Plan Item I.C.1.
Issue 19	Safety Implications of Non-safety Instrument and Control Power Supply Bus	(6) Issue included in the scope of broader efforts for Item A-47.
Issue 20	Effects of Electromagnetic Pulse on Nuclear Power Plants	(4)
Issue 21	Vibration Qualification of Equipment	(3)

Table 1.11-1 (continued)

Action Plan Item/Issue Number	Description	Associated Location(s) or Technical Resolution
Issue 22	Inadvertent Boron Dilution Events	(1) This is a PWR issue that is not applicable to ESBWR.
Issue 23	Reactor Coolant Pump Seal Failures	(1) The ESBWR is a passive plant utilizing natural circulation and does not have a Reactor Coolant Pump.
Issue 24	Automatic ECCS Switchover to Recirculation	(1) This is a PWR issue. The ESBWR design includes a passive ECCS that has no automatic switchover functions.
Issue 25	Automatic Air Header Dump on BWR Scram System	(1) In the ESBWR Fine Motion Control Rod Drive (FMCRD) design, described in Section 4.6, the water which scrams the control rod discharges into the reactor vessel and does not require a scram discharge volume, thus eliminating a potential source for common mode scram failure. Therefore, this issue is not applicable to the ESBWR Standard Plant design.
Issue 26	Diesel Generator Loading Problems Related to SIS Reset on Loss of Offsite Power	(6) This issue is covered under Issue 17.
Issue 27	Manual vs. Automated Actions	(6) This issue is covered under Item B-17
Issue 28	Pressurized Thermal Shock	(1, 6) PWR issue covered under Item A-49.
Issue 29	Bolting Degradation or Failure in Nuclear Power Plants	(4) Refer to Subsection 3.9.3, ASME Code Class 1, 2 and 3 Components, Component Supports and Core Support Structures for further details.
Issue 30	Potential Generator Missiles – Generator Rotor Retaining Rings	(3)
Issue 31	Natural Circulation Cooldown	(1, 6) This PWR issue is considered part of TMI Action Plan Item I.C.1.
Issue 32	Flow Blockage in Essential Equipment Caused by Corbicula	(6) This issue has been combined and evaluated with Issue 51.

Table 1.11-1 (continued)

Action Plan Item/Issue Number	Description	Associated Location(s) or Technical Resolution
Issue 33	Correcting Atmospheric Dump Valve Opening Upon Loss of Integrated Control System Power	(1, 6) This PWR issue is covered in Item A-47.
Issue 34	RCS Leak	(3)
Issue 35	Degradation of Internal Appurtenances in LWRs	(9)
Issue 36	Loss of Service Water	(4)
Issue 37	Steam Generator Overfill and Combined Primary and Secondary Blowdown	(1) There are no steam generators in the ESBWR design.
Issue 38	Potential Recirculation System Failure as a Consequence of Ingestion of Containment Paint Flakes or Other Fine Debris	(3)
Issue 39	Potential for Unacceptable Interaction between the CRD System and Non-Essential Control Air System	(1, 6) This issue is addressed in Issue 25.
Issue 40	Safety Concerns Associated with Pipe Breaks in the BWR Scram System	(1) In the ESBWR Fine Motion Control Rod Drive (FMCRD) design, described in Section 4.6, the water which scrams the control rod discharges into the reactor vessel and does not require a scram discharge volume, thus eliminating a potential source for common mode scram failure. Therefore, this issue is not applicable to the ESBWR Standard Plant design.

Table 1.11-1 (continued)

Action Plan Item/Issue Number	Description	Associated Location(s) or Technical Resolution
Issue 41	BWR Scram Discharge Volume Systems	(1) In the ESBWR Fine Motion Control Rod Drive (FMCRD) design, described in Section 4.6, the water which scrams the control rod discharges into the reactor vessel and does not require a scram discharge volume, thus eliminating a potential source for common mode scram failure. Therefore, this issue is not applicable to the ESBWR Standard Plant design.
Issue 42	Combination Primary/Secondary System LOCA	(1) This PWR issue is covered by TMI Action Plan Item I.C.1. The ESBWR is a direct cycle plant.
Issue 43	Reliability of Air Systems	(8)
Issue 44	Failure of Saltwater Cooling System	(4, 6) Remaining generic issue covered by Issue 43. No new requirements for other parts of this issue.
Issue 45	Inoperability of Instrumentation Due to Extreme Cold Weather	(8) This issue is considered resolved through compliance with SRP Sections 7.1, 7.5 and 7.7 and Regulatory Guide (RG) 1.151. As noted in Table 1.9-7, the ESBWR Standard Plant design complies with SRP Sections 7.1, 7.5 and 7.7. Also, as noted in Table 1.9-21 and Section 7.1, the ESBWR Standard Plant design complies with RG 1.151.
Issue 46	Loss of 125 Volt DC Bus	(6) This issue is covered by Issue 76.
Issue 47	The Loss of Offsite Power	(4)
Issue 48	LCO for Class 1E Vital Instrument Buses in Operating Reactors	(6) Integrated into the resolution of Issue 128.
Issue 49	Interlocks and LCOs for Class 1E Tie-Breakers	(6) Integrated into the resolution of Issue 128.
Issue 50	Reactor Vessel Level Instrumentation in BWRs	(4) Issue addressed under TMI Action Plan Item II.F.2 in Table 1A-1.

Table 1.11-1 (continued)

Action Plan Item/Issue Number	Description	Associated Location(s) or Technical Resolution
Issue 51	Proposed Requirements for Improving the Reliability of Open Cycle Service Water System	(1) The water systems described in Section 9.2 (e.g., Plant Service Water System, Reactor Component Cooling Water System, Make-up Water System, Chilled Water System, Turbine Component Cooling Water System) are nonsafety-related and are not designed to cool any safety-related heat loads. The ESBWR post-accident heat removal is through passive means. Overall reliability of the design of these systems is addressed in Chapter 19.
Issue 52	SSW Flow Blockage by Blue Mussels	(1) This issue has been combined with Issue 51.
Issue 53	Consequences of a Postulated Flow Blockage Incident in a BWR	(3)
Issue 54	Survey of Valve Operator-Related Events Occurring During 1978, 1979, and 1980	(6) Objectives of issue are met by TMI Action Plan Item II.E.6.1.
Issue 55	Failure of Class 1E Safety-Related Switchgear Circuit Breakers to Close on Demand	(3)
Issue 56	Abnormal Transient Operating Guidelines as Applied to a Steam Generator Overfill Event	(1) There are no steam generators in the ESBWR design.
Issue 57	Effects of Fire Protection System Actuation on Safety-Related Equipment	(4) The ESBWR Fire Protection System (FPS) described in Subsection 9.5.1 is designed in compliance with NUREG-0800, SRP 9.5.1 Branch Technical Position (BTP) SPLB 9.5-1. Therefore, this issue is resolved for the ESBWR Standard Plant design. Refer to Subsection 9.5.1 for further details.

Table 1.11-1 (continued)

Action Plan Item/Issue Number	Description	Associated Location(s) or Technical Resolution
Issue 58	Containment Flooding	(3)
Issue 59	Technical Specification Requirements for Plant Shutdown when Equipment for Safe Shutdown is Degraded or Inoperable	(5)
Issue 60	Lamellar Tearing of Reactor Systems Structural Supports	(6) This issue is addressed as a subtask of Item A-12.
Issue 61	SRV Line Break Inside the BWR Wetwell Airspace of Mark I and II Containments	(4)
Issue 62	Reactor Systems Bolting Applications	(6) This issue was integrated into the resolution of Issue 29.
Issue 63	Use of Equipment Not Classified as Essential to Safety in BWR Transient Analysis	(3)
Issue 64	Identification of Protection System Instrument Sensing Lines	(4) Addressed by compliance with RG 1.151. As noted in Table 1.9-21, the ESBWR Standard Plant design complies with RG 1.151. Refer to Table 7.1-2 for additional information on compliance with IEEE 603 and Subsection 7.1.6.4 for additional information on compliance with RG 1.151.
Issue 65	Probability of Core-Melt Due to Component Cooling Water System Failures	(1, 6) Incorporated into the resolution of Issue 23. The ESBWR does not rely on component cooling water systems to prevent core melt.
Issue 66	Steam Generator Requirements	(1) There are no steam generators in the ESBWR design.

Table 1.11-1 (continued)

Action Plan Item/Issue Number	Description	Associated Location(s) or Technical Resolution
Issue 67	Steam Generator Staff Actions	(1) There are no steam generators in the ESBWR design, so in general this issue is not applicable. See rows below for discussion of various subtasks.
Issue 67.2.1	Integrity of Steam Generator Tube Sleeves	(1, 6) This PWR issue was addressed in the resolution of Issue 135.
Issue 67.3.1	Steam Generator Overfill	(1, 6) This PWR issue is covered by Item A-47 and TMI Action Plan Item I.C.1.
Issue 67.3.2	Pressurized Thermal Shock	(1, 6) This PWR issue is addressed in Item A-49.
Issue 67.3.3	Improved Accident Monitoring	(8) This issue is considered resolved through compliance with Generic Letter (GL) 82-33, consistent with the NRC resolution. As noted in Table 1C-1, the ESBWR Standard Plant design has addressed GL 82-33 through compliance with Regulatory Guide 1.97. The ESBWR Standard Plant is designed in accordance with Regulatory Guide 1.97, Revision 4 ("Criteria for Accident Monitoring Instrumentation for Nuclear Power Plants"). An assessment of the Regulatory Guide is found in Section 7.5.
Issue 67.3.4	Reactor Vessel Inventory Measurement	(6) Addressed by implementation of TMI Action Plan Item II.F.2. See Appendix 1A for discussion of application of that item to ESBWR.
Issue 67.4.1	RCP Trip	(1, 6) The ESBWR has no reactor coolant pumps. Issue covered by TMI Action Plan Item II.K.3(5).
Issue 67.4.2	Control Room Design Review	(6) This issue is covered by TMI Action Plan Item I.D.1. See Appendix 1A and Chapter 18.
Issue 67.4.3	Emergency Operating Procedures	(6) This issue is covered by TMI Action Plan Item I.C.1. See Section 18.9 for a discussion of Emergency Operating Procedures development.
Issue 67.5.1	Reassessment of Radiological Consequences	(1) The ESBWR design does not include steam generators so the event discussed in this issue cannot occur for ESBWR.

Table 1.11-1 (continued)

Action Plan Item/Issue Number	Description	Associated Location(s) or Technical Resolution
Issue 67.5.2	Reevaluation of SGTR Design Basis	(1) A steam generator tube rupture event is not possible in an ESBWR.
Issue 67.5.3	Secondary System Isolation	(1, 3) The ESBWR is a direct cycle plant with no secondary system to isolate.
Issue 67.6.0	Organizational Responses	(6) This issue is covered by TMI Action Plan Item III.A.3.
Issue 67.7.0	Improved Eddy Current Tests	(6) This issue was integrated into the resolution of Issue 135.
Issue 67.8.0	Denting Criteria	(1, 6) The ESBWR has no steam generator tubes that could become dented. This issue was addressed in the resolution of Issue 135.
Issue 67.9.0	Reactor Coolant System Pressure Control	(1, 6) Specific issue deals with reducing pressure after a steam generator tube rupture and thus is not directly applicable to ESBWR. The issue was considered resolved under TMI Action Plan Items I.C.1(2,3) and Issue A-45. The ESBWR capability in response to the NRC Policy Statement on Severe Accidents encompasses the NRC requirements for resolution of USI A-45 (and Issue 67.9.0). Therefore, this issue is considered resolved for the ESBWR Standard Plant design.
Issue 67.10.0	Supplemental Tube Inspections	(1) The ESBWR has no steam generator tubes to inspect.
Issue 68	Postulated Loss of Auxiliary Feedwater System Resulting from Turbine-Driven Auxiliary Feedwater Pump Steam Supply Line Rupture	(1, 6) This PWR issue was integrated into the resolution of Issue 124.
Issue 69	Make-Up Nozzle Cracking in B&W Plants	(1, 4) This issue only applies to B&W PWRs.
Issue 70	PORV and Block Valve Reliability	(8)

Table 1.11-1 (continued)

Action Plan Item/Issue Number	Description	Associated Location(s) or Technical Resolution
Issue 71	Failure of Resin Demineralizer Systems and Their Effects on Nuclear Power Plant Safety	(3)
Issue 72	Control Rod Drive Guide Tube Support Pin Failures	(3)
Issue 73	Detached Thermal Sleeves	(8)
Issue 74	Reactor Coolant Activity Limits for Operating Reactors	(3)
Issue 75	Generic Implications of ATWS Events at the Salem Nuclear Plant	(8) The reactor protection (trip) system (RPS) design for the ESBWR, described in detail in Subsection 7.2.1, fully satisfies all NRC requirements indicated in Generic Letter 83-28 and in NUREG-1000. The RPS designs for BWRs are substantially different from the reactor trip system design used in Salem Unit 1. These differences were outlined in the NRC Staff Meeting on Generic Implications of Salem Events with General Electric Company on March 10, 1983. The basic differences between BWR designs, used at the time of the Salem events, and the reactor trip system designs then used by PWRs, are described in Section 3.1.2.5 (and preceding Sections 3.1.2.2 to 3.1.2.4) and Table 3.1 of NUREG-1000, Volume 1. The ESBWR further improves upon the BWR RPS designs used at the time of the Salem ATWS events. The RPS is designed to provide reliable single-failure-proof capability to automatically or manually initiate a reactor scram while maintaining protection against unnecessary scrams resulting from single failures. The RPS remains single-failure-proof even when one entire division of channel sensors is

Table 1.11-1 (continued)

Action Plan Item/Issue Number	Description	Associated Location(s) or Technical Resolution
		bypassed or when one of the four automatic RPS trip logic systems is out-of-service. This is accomplished through the combination of fail-safe equipment design, the redundant two-out-of-four sensor channel trip decision logic, and the redundant two-out-of-four trip systems output scram logic arrangement utilized in the RPS design. The RPS has built-in redundancy in its design to satisfy the reliability and availability requirements of the system. A separate and diverse manual trip method is provided in the form of two manual trip systems. Actuation of both manual trip systems is required for a full reactor scram. Physical separation and electrical isolation between redundant portions of the RPS are provided by separated process instrumentation, separated racks, and either separated or protected panels and cabling. The ESBWR design addresses the ATWS rule of 10 CFR 50.62 and thus satisfies the regulatory objectives of "defense in depth". 10 CFR 50.62 provides the "requirements for reduction of risk from anticipated transients without scram (ATWS) events for light-water cooled nuclear power plants". The ESBWR design employs separate sensors and logic, which are independent and/or diverse from the RPS design, to monitor selected reactor parameters for conditions that could be indicative of an ATWS event. The ESBWR design also includes an automatic Standby Liquid Control (SLC) system, which has a combined minimum flow capacity and boron content that exceeds the requirements as indicated in 10 CFR 50.62. The SLC system injection locations are designed to permit its function in a reliable manner.

Table 1.11-1 (continued)

Action Plan Item/Issue Number	Description	Associated Location(s) or Technical Resolution
		Based on the above statements, this issue is considered resolved for the ESBWR Standard Plant design.
Issue 76	Instrumentation and Control Power Interactions	(3)
Issue 77	Flooding of Safety Equipment Compartments by Backflow Through Floor Drains	(6) This issue was integrated into the resolution of Issue A-17.
Issue 78	Monitoring of Fatigue Transient Limits for Reactor Coolant System	(4) The Technical Specifications for ESBWR follow the pattern of Standard Tech Spec such as those for the General Electric BWR/6 plants (NUREG-1434). The ESBWR RCPB design includes the fatigue consideration from thermal cycles established for the operating design life of the reactor pressure vessel. Therefore, this issue is resolved for the ESBWR Standard Plant design.
Issue 79	Unanalyzed Reactor Vessel Thermal Stress During Natural Convection Cooldown	(1, 4) This issue applies specifically to B&W PWRs. The thermal cycles discussed above in response to Issue 78 already consider the maximum RPV cooldown rate for ESBWR.
Issue 80	Pipe Break Effects on Control Rod Drive Hydraulic Lines in the Drywells of BWR Mark I and II Containments	(1) The ESBWR Containment and layout of CRD hydraulic lines are markedly different from Mark I and II Containments. The concerns associated with this issue have been addressed in the design of the ESBWR Containment and CRD hydraulic lines.
Issue 81	Impact of Locked Doors and Barriers on Plant and Personnel Safety	(9)
Issue 82	Beyond Design Basis Accidents in Spent Fuel Pools	(4)

Table 1.11-1 (continued)

Action Plan Item/Issue Number	Description	Associated Location(s) or Technical Resolution
Issue 83	Control Room Habitability	(4) ESBWR control room habitability is addressed and described in detail in Section 6.4. The ESBWR Control Room Habitability Area (CRHA) includes instrumentation and controls necessary for safe shutdown of the plant and is limited to those areas requiring operator access during and after a Design Basis Accident (DBA). The CRHA constitutes the operation control area, which can be isolated for an extended period as is required by the existence of a LOCA or high radiation condition. The control room shielding design is based upon protecting personnel from radiation resulting from a design basis LOCA. The Control Room Habitability Area HVAC Subsystem (CRHAVS) instrumentation is designed to detect high airborne radioactivity and smoke, and automatically isolate the CRHA upon detection of high airborne radioactivity. Subsection 6.4.5 addresses toxic gas detection requirements. The CRHAVS is designed to remove smoke or other airborne hazardous materials from the control room or other areas of the CRHA (purge mode), provided that the outside air is free of airborne hazardous materials. The CRHAVS can also filter recirculating air without outside air make-up (recirculation mode). These design features resolve this issue for the ESBWR Standard Plant design.
Issue 84	CE PORVs	(1, 4) This is specifically an issue for CE PWRs. ESBWR design features for providing overpressure protection are discussed in Subsections 5.2.2 and 5.4.13.
Issue 85	Reliability of Vacuum Breakers Connected to Steam Discharge Lines Inside BWR Containments	(3)

Table 1.11-1 (continued)

Action Plan Item/Issue Number	Description	Associated Location(s) or Technical Resolution
Issue 86	Long Range Plan for Dealing with Stress Corrosion Cracking in BWR Piping	(8) This issue is considered resolved through compliance with NUREG-0313, Rev. 2 and Generic Letter (GL) 88-01, consistent with the NRC resolution. As noted in Subsection 5.2.3.4.1, the ESBWR Standard Plant design complies with NUREG-0313, Rev. 2.
Issue 87	Failure of HPCI Steam Line without Isolation	(1) There is no HPCI system in the ESBWR design.
Issue 88	Earthquakes and Emergency Planning	(4)
Issue 89	Stiff Pipe Clamps	(9 for existing plants only) This issue will be considered during detailed design of Class 1 piping for ESBWR.
Issue 90	Technical Specifications for Anticipatory Trips	(3)
Issue 91	Main Crankshaft Failures in Transamerica Delaval Emergency Diesel Generators	(4) The ESBWR design includes nonsafety-related Standby Diesel Generators instead of safety-related Emergency Diesel Generators.
Issue 92	Fuel Crumbling During LOCA	(3)
Issue 93	Steam Binding of Auxiliary Feedwater Pumps	(1) The ESBWR does not include Auxiliary Feedwater Pumps or any other pumps that might experience steam binding.
Issue 94	Additional Low Temperature Overpressure Protection for Light Water Reactors	(1, 8) PWR issue. ESBWR design features for providing overpressure protection are discussed in Subsections 5.2.2 and 5.4.13.
Issue 95	Loss of Effective Volume for Containment Recirculation Spray	(4)

Table 1.11-1 (continued)

Action Plan Item/Issue Number	Description	Associated Location(s) or Technical Resolution
Issue 96	RHR Suction Valve Testing	(1, 6) PWR issue that has been integrated into resolution of Issue 105.
Issue 97	PWR Reactor Cavity Uncontrolled Exposures	(1) This is a PWR issue that is not applicable to ESBWR.
Issue 98	CRD Accumulator Check Valve Leakage	(3)
Issue 99	RCS/RHR Suction Line Valve Interlock on PWRs	(1) This is a PWR issue that is not applicable to ESBWR.
Issue 100	Once-Through Steam Generator Level	(1) This is a PWR issue that is not applicable to ESBWR.
Issue 101	BWR Water Level Redundancy	(4) Issue resolved in conjunction with operator training and procedures.
Issue 102	Human Error in Events Involving Wrong Unit or Wrong Train	(4)
Issue 103	Design for Probable Maximum Precipitation	(8) The maximum flood level for the ESBWR design is 0.3 m (1 foot) below grade, which is consistent with the NRC recommendation. The developed NOAA/NWS procedures from Generic Letter 89-22 will be used for determining PMP for a specific site. Therefore, this issue is resolved for the ESBWR Standard Plant design.
Issue 104	Reduction of Boron Dilution Requirements	(1) This is a PWR issue that is not applicable to the ESBWR design.
Issue 105	Interfacing Systems LOCA at LWRs	(4) Subsection 7.6.1 describes high pressure/low pressure interlocks to prevent overpressurization of low pressure systems which are connected to high pressure systems. Portions of the GDCS piping are considered part of the reactor coolant boundary and portions of the piping connect to the low pressure GDCS pools. A positive means is provided in the system design to prevent reactor pressure from being transmitted to the low pressure portion of the GDCS. Both

Table 1.11-1 (continued)

Action Plan Item/Issue Number	Description	Associated Location(s) or Technical Resolution
		mechanical means of isolation and system interlocks ensure that high pressure is not transmitted to the low pressure portions of the system. The only other high pressure/low pressure interface is the LPCI mode of the nonsafety-related Fuel and Auxiliary Pools Cooling System (FAPCS), which is described in Subsection 9.1.3. Based on system design and testing procedure evaluations from the point of view of interfacing system LOCA and overpressurization of low pressure systems, the following conclusions are reached: • The low pressure portions of the system are adequately protected from high pressure during normal plant operation. • Interlocks on the valves are provided that allow operability testing of valves during normal plant operation or under cold shutdown conditions. • Isolation of the high/low pressure systems is maintained during valve testing. • Isolation of the high/low pressure systems is maintained under the condition of an inadvertent opening of a valve due to an electrical failure. • ALWR requirements imposed on ESBWR for high/low pressure interface design for systems are met. • The system design pressures requirements imposed by ALWR are met. The overall conclusion is that the concerns identified in GSI 105, "Interfacing Systems LOCA at

Table 1.11-1 (continued)

Action Plan Item/Issue Number	Description	Associated Location(s) or Technical Resolution
		LWRs," are resolved for ESBWR. Refer to the intersystem loss-of-coolant accident evaluation in Appendix 3K, "Resolution of Intersystem Loss-of-Coolant Accident," for further details.
Issue 106	Piping and the Use of Highly Combustible Gases in Vital Areas	(4) This issue is considered resolved through compliance with SRP Section 9.5.1, consistent with the NRC resolution. Table 1.9-9 summarizes ESBWR Standard Plant design compliance with SRP Section 9.5.1, and notes some differences to acceptance criteria along with references to Subsections where the differences are discussed. Refer to Subsection 9.5.1 for further details.
Issue 107	Main Transformer Failures	(9 for existing plants only) This issue will be considered during detailed design of the ESBWR electrical systems. See Chapter 8.
Issue 108	BWR Suppression Pool Temperature Limits	(9)
Issue 109	Reactor Vessel Closure Failure	(3)
Issue 110	Equipment Protective Devices on Engineered Safety Features	(3)
Issue 111	Stress Corrosion Cracking of Pressure Boundary Ferritic Steels in Selected Environments	(5)
Issue 112	Westinghouse RPS Surveillance Frequencies and Out-of-Service Times	(1) This is a Westinghouse PWR issue that is not applicable to ESBWR.
Issue 113	Dynamic Qualification Testing of Large Bore Hydraulic Snubbers	(4) Regulatory Guide may eventually be developed addressing this issue for new plants.
Issue 114	Seismic-Induced Relay	(6) This issue is addressed in the resolution of Issue

Table 1.11-1 (continued)

Action Plan Item/Issue Number	Description	Associated Location(s) or Technical Resolution
	Chatter	A-46.
Issue 115	Enhancement of the Reliability of Westinghouse Solid State Protection System	(1, 4) Issue is specific to Westinghouse PWRs.
Issue 116	Accident Management	(5)
Issue 117	Allowable Time for Diverse Simultaneous Equipment Outages	(3)
Issue 118	Tendon Anchor Head Failure	(1) Inspection of a PWR prestressed concrete containment structure revealed that three lower vertical tendon anchor heads were broken. The failures appeared to have been caused by hydrogen stress cracking. Hydrogen is liberated by zinc in the presence of water. Quantities of water ranging from about 0.06 to 6 liters (a few ounces to about 1.5 gallons) have been found in the grease caps. The ESBWR primary containment structure is a reinforced concrete design. Therefore, this GSI is not applicable to the ESBWR Standard Plant design.
Issue 119	Piping Review Committee Recommendations	(Covered below)
Issue 119.1	Piping Rupture Requirements and Decoupling of Seismic and LOCA Loads	(8) This issue is considered resolved through compliance with SRP Sections 3.6.1 and 3.6.2, consistent with the NRC resolution. As noted in Table 1.9-3, the ESBWR Standard Plant design complies with SRP Sections 3.6.1 and 3.6.2.
Issue 119.2	Piping Damping Values	(3)
Issue 119.3	Decoupling the OBE from the SSE	(1) The OBE is not part of the licensing basis for ESBWR.
Issue 119.4	BWR Piping Materials	(1, 8) This issue primarily addresses materials for use in recirculation piping in BWRs. The ESBWR design does not include recirculation lines.

Table 1.11-1 (continued)

Action Plan Item/Issue Number	Description	Associated Location(s) or Technical Resolution
Issue 119.5	Leak Detection Requirements	(5)
Issue 120	On-Line Testability of Protection Systems	(4) The main concern of this issue is the on-line testability of the actuation subgroup (slave) relays in the engineered safety features actuation system (ESFAS). The requirements for at-power testability of components are included in GDC 21 of Appendix A of 10 CFR 50. RG 1.22, "Periodic Testing of Protection System Actuation Functions," RG 1.118, "Periodic Testing of Electric Power and Protection Systems," and IEEE 338-1987, "Standard Criteria for the Periodic Surveillance Testing of Nuclear Power Generating Station Safety Systems," provide supplementary guidance. This guidance is intended to ensure that protection (including logic, actuation devices, and associated actuated equipment) will be designed to permit testing while a plant is operating at power without adversely affecting the plant's operation. The ESBWR design utilizes microprocessors and final actuation contacts instead of slave relays in the protection systems. The protection system design permits on-line (at-power) surveillance testing without adversely affecting the plant's operation. The ESBWR Technical Specifications in Chapter 16 provide surveillance requirements for several RPS instrumentation functions while in Mode 1 (Power Operation). Surveillance of ECCS instrumentation is also specified in the ESBWR Technical Specifications, and is applicable while in Mode 1.
Issue 121	Hydrogen Control for Large, Dry PWR Containments	(1) This GSI is applicable to PWR-type designs only. This GSI is not applicable to the ESBWR Standard Plant design.
Issue 122	Davis-Besse Loss of All Feedwater Event of June 9, 1985 –	See rows below for discussion of various subtasks.

Table 1.11-1 (continued)

Action Plan Item/Issue Number	Description	Associated Location(s) or Technical Resolution
	Short-Term Actions	
Issue 122.1	Potential Inability to Remove Reactor Decay Heat.	See subissues below
Issue 122.1.a	Failure of Isolation Valves in Closed Position.	(1, 6) Integrated into the resolution of Issue 124. The ESBWR design does not rely on the reopening of isolation valves to remove decay heat.
Issue 122.1.b	Recovery of Auxiliary Feedwater.	(1, 6) Addressed initially by Issue 122.2, but later integrated into resolution of Issue 124. ESBWR uses Isolation Condensers for this function, which run continuously once they have been initiated.
Issue 122.1.c	Interruption of Auxiliary Feedwater Flow.	(1, 6) Integrated into the resolution of Issue 124, which only applies to PWRs.
Issue 122.2	Initiating Feed-and-Bleed	(1, 4) The ESBWR design does not rely upon feed-and-bleed cooling.
Issue 122.3	Physical Security System Constraints.	(3)
Issue 123	Deficiencies in the Regulations Governing DBA and Failure Criterion Suggested by the Davis-Besse Incident of June 9, 1985	(3, 6) Safety concerns associated with this issue are addressed in the resolution of Issues A-17, A-44, A-45 and A-47.
Issue 124	Auxiliary Feedwater System Reliability	(1, 8) This GSI is applicable to PWR-type designs only. Therefore, this GSI is not applicable to the ESBWR Standard Plant design.
Issue 125	Davis-Besse Loss of All Feedwater Event of June 9, 1985 – Long-Term Actions	See rows below for discussion of various subtasks.
Issue 125.I.1	Availability of the Shift Technical Advisor	(3)
Issue 125.I.2	PORV Reliability	See rows below.

Table 1.11-1 (continued)

Action Plan Item/Issue Number	Description	Associated Location(s) or Technical Resolution
Issue 125.I.2.a	Need for a Test Program to Establish Reliability of the PORV.	(1, 6) This issue is covered in Issue 70. The ESBWR does not have PORVs.
Issue 125.I.2.b	Need for PORV Surveillance Tests to Confirm Operational Readiness.	(1, 6) This issue is covered in Issue 70. The ESBWR does not have PORVs.
Issue 125.I.2.c	Need for Additional Protection Against PORV Failure.	(1, 3) The ESBWR does not have PORVs.
Issue 125.I.2.d	Capability of the PORV to Support Feed-and-Bleed.	(1, 6) This issue is covered in Issue A-45. The ESBWR does not have PORVs.
Issue 125.I.3	SPDS Availability	(4, 6) This issue is addressed in the resolution of TMI Action Plan Item I.D.2. See Appendix 1A.
Issue 125.I.4	Plant-Specific Simulator.	(3, 6) This issue is addressed in the resolution of TMI Action Plan Item I.A.4.2(4). See Appendix 1A.
Issue 125.I.5	Safety Systems Tested in All Conditions Required by DBA.	(3, 6) An alternative approach to address this issue is assessed as part of Issue 145.
Issue 125.I.6	Valve Torque, Limit, and Bypass Switch Settings.	(3, 6) This issue is addressed by IE Bulletin 85-03 and in the resolution of TMI Action Plan Item II.E.6.1.
Issue 125.I.7	Operator Training Adequacy.	See rows below.
Issue 125.I.7.a	Recover Failed Equipment.	(3, 6) This issue is addressed by Issue HF2.1.
Issue 125.I.7.b	Realistic Hands-On Training.	(3, 6) This issue is addressed by Issue HF3.1.
Issue 125.I.8	Procedures and Staffing for Reporting to NRC Emergency Response Center.	(3, 6) This issue is a duplication of the concern addressed in TMI Action Plan Item III.A.3.4.

Table 1.11-1 (continued)

Action Plan Item/Issue Number	Description	Associated Location(s) or Technical Resolution
Issue 125.II.1	Need for Additional Actions on AFW Systems.	(1) See rows below. The ESBWR has no Auxiliary Feedwater System so this group of items is generally not applicable.
Issue 125.II.1.a	Two-Train AFW Unavailability.	(1, 3, 6) This issue is the same as Issue 124.
Issue 125.II.1.b	Review Existing AFW Systems for Single Failure.	(1, 6) This issue is covered by Issue 124.
Issue 125.II.1.c	NUREG-0737 Reliability Improvements.	(3)
Issue 125.II.1.d	AFW/Steam and Feedwater Rupture Control System/ICS Interactions in B&W Plants.	(1, 3, 6) This issue is covered in Issue 124 and applies specifically to auxiliary feedwater systems in PWRs designed by B&W. The ESBWR design does not contain an auxiliary feedwater system.
Issue 125.II.2	Adequacy of Existing Maintenance Requirements for Safety-Related Systems.	(3)
Issue 125.II.3	Review Steam/Feedline Break Mitigation Systems for Single Failure	(3, 6) This issue is covered by Issues 125.II.1.b and 125.II.7.
Issue 125.II.4	Thermal Stress of OTSG Components	(1, 3) The ESBWR design does not contain a once-through steam generator.
Issue 125.II.5	Thermal-Hydraulic Effects of Loss and Restoration of Feedwater on Primary System Components.	(3)
Issue 125.II.6	Reexamine PRA Estimates of Core Damage Risk from Loss of All Feedwater.	(3)

Table 1.11-1 (continued)

Action Plan Item/Issue Number	Description	Associated Location(s) or Technical Resolution
Issue 125.II.7	Reevaluate Provision to Automatically Isolate Feedwater from Steam Generator During a Line Break.	(1, 4) The ESBWR design does not include a steam generator.
Issue 125.II.8	Reassess Criteria for Feed-and-Bleed Initiation.	(3, 6) This issue is covered under Issue 122.2.
Issue 125.II.9	Enhanced Feed-and-Bleed Capability.	(3)
Issue 125.II.10	Hierarchy of Impromptu Operator Actions.	(3, 6) This issue is addressed in Issue HF4.4.
Issue 125.II.11	Recovery of Main Feedwater as Alternative to Auxiliary Feedwater.	(3, 6) This issue is addressed in Issue 124 and in revisions to PWR Emergency Procedure Guidelines.
Issue 125.II.12	Adequacy of Training Regarding PORV Operation.	(3, 6) This issue is addressed in Issue HF3.1.
Issue 125.II.13	Operator Job Aids.	(3, 6) This issue is partially addressed by the resolution of Issue HF5.1.
Issue 125.II.14	Remote Operation of Equipment Which Must Now Be Operated Locally.	(3)
Issue 126	Reliability of PWR Main Steam Safety Valves	(1) This issue is specific to Main Steam Safety Valves in PWRs.
Issue 127	Maintenance and Testing of Manual Valves in Safety-Related Systems	(9)
Issue 128	Electrical Power Reliability	(8) The ESBWR design incorporates specific design features that assure that the problems described in this issue are avoided. These design features

Table 1.11-1 (continued)

Action Plan Item/Issue Number	Description	Associated Location(s) or Technical Resolution
		include: • Two independent and physically separate offsite sources supply reliable power to the plant auxiliary and service loads, such that any single active failure can affect only one power source and cannot propagate to the alternate power source. • In the event of total loss of offsite power sources, two onsite independent nonsafety-related standby diesel generators are provided to power the Plant's Investment Protection (PIP) nonsafety-related loads (and safety-related loads through battery chargers). • Four independent and redundant onsite safety-related DC systems supply power for operation of safety-related DC loads. • Each division of the safety-related power distribution system is provided with physically separated and electrically independent batteries sized to supply emergency power to the safety-related systems in the event of loss of all other power sources.

Table 1.11-1 (continued)

Action Plan Item/Issue Number	Description	Associated Location(s) or Technical Resolution
		• Any two of four onsite electrical safety-related divisions can safely shut down the unit and maintain it in a safe shutdown condition. • Separation criteria are established for preserving the independence of redundant safety-related systems and providing isolation between safety-related and nonsafety-related equipment. • Specified functions of engineered safety systems are met by use of redundant divisions. This issue is considered resolved for the ESBWR Standard Plant design because of these ESBWR design features.
Issue 129	Valve Interlocks to Prevent Vessel Drainage During Shutdown Cooling.	(3)
Issue 130	Essential Service Water Pump Failures at Multiplant Sites.	(1) The ESBWR Standard Plant contains only one unit. The ESBWR design also does not contain Essential Service Water pumps.
Issue 131	Potential Seismic Interaction Involving the Movable In-Core Flux Mapping System Used in Westinghouse-Designed Plants.	(1) This is a Westinghouse PWR issue that is not applicable to ESBWR.
Issue 132	RHR System Inside Containment.	(3)
Issue 133	Update Policy Statement on Nuclear Plant Staff Working Hours.	(5)

Table 1.11-1 (continued)

Action Plan Item/Issue Number	Description	Associated Location(s) or Technical Resolution
Issue 134	Rule on Degree and Experience Requirement.	(4)
Issue 135	Steam Generator and Steam Line Overfill.	(1) The ESBWR is a direct cycle plant and does not have a Steam Generator.
Issue 136	Storage and Use of Large Quantities of Cryogenic Combustibles On Site.	(5)
Issue 137	Refueling Cavity Seal Failure.	(3)
Issue 138	Deinerting of BWR Mark I and Mark II Containments During Power Operations upon Discovery of RCS Leakage or a Train of a Safety System Inoperable	(3)
Issue 139	Thinning of Carbon Steel Piping in LWRs.	(8)
Issue 140	Fission Product Removal Systems.	(3)
Issue 141	Large Break LOCA with Consequential SGTR.	(1, 3) The ESBWR has no steam generator tubes that could rupture during a LOCA.

Table 1.11-1 (continued)

Action Plan Item/Issue Number	Description	Associated Location(s) or Technical Resolution
Issue 142	Leakage through Electrical Isolators in Instrumentation Circuits	(4) The ESBWR design has interfaces between electrical divisions for logic voting, and between divisional and non-divisional circuits for annunciations, etc. However, these interfaces are accomplished through a fiber-optic medium that is non-conductive and thus providing full safety-related isolation. No interlocking is provided, nor required, for these interfaces. The ESBWR electrical hardware is not affected significantly by noise because of the combination of digital transmission and fiber optics incorporated in the design. See Chapter 7 for further details.
Issue 143	Availability of Chilled Water Systems and Room Cooling	(4) The ESBWR Chilled Water System (CWS), described in Subsection 9.2.7, provides chilled water to the cooling coils of air conditioning units and other coolers in the reactor building portion of the plant, and has no safety-related function. Failure of the CWS does not compromise any safety-related system or component, nor does it prevent a safe shutdown of the plant.
Issue 144	Scram without a Turbine/Generator Trip	(3)
Issue 145	Actions to Reduce Common Cause Failures	(4)
Issue 146	Support Flexibility of Equipment and Components.	(4) Resolution of this issue recommends actions for new plants that could lead to updates to some SRP Sections.
Issue 147	Fire-Induced Alternate Shutdown/Control Room Panel Interactions.	(5)
Issue 148	Smoke Control and Manual Fire-Fighting Effectiveness.	(5)

Table 1.11-1 (continued)

Action Plan Item/Issue Number	Description	Associated Location(s) or Technical Resolution
Issue 149	Adequacy of Fire Barriers.	(3)
Issue 150	Overpressurization of Containment Penetrations.	(3)
Issue 151	Reliability of Anticipated Transient Without Scram Recirculation Pump Trip in BWRs.	(1) The ESBWR is a passive design and does not have Recirculation Pumps. The ESBWR response to ATWS events is discussed in Chapter 15.
Issue 152	Design Basis for Valves that Might be Subjected to Significant Blowdown Loads.	(3)
Issue 153	Loss of Essential Service Water in LWRs	(4) The traditional Emergency (or essential) Service Water (ESW) system found in most plants provides cooling water to the safety-related equipment required to safely shut down the reactor and to mitigate the consequences of postulated accidents. The ESBWR does not need/have a safety-related ESW system. The water systems described in Section 9.2 (e.g., Plant Service Water System, Reactor Component Cooling Water System, Make-up Water System, Chilled Water System, Turbine Component Cooling Water System) are nonsafety-related and are not designed to cool any safety-related heat loads. The ESBWR post-accident heat removal is through passive means.
Issue 154	Adequacy of Emergency and Essential Lighting.	(3)
Issue 155	Generic Concerns Arising from TMI-2 Cleanup.	

Table 1.11-1 (continued)

Action Plan Item/Issue Number	Description	Associated Location(s) or Technical Resolution
Issue 155.1	More Realistic Source Term Assumptions	(8) The use of alternate source terms is addressed in Chapter 15. Regulatory Guide 1.183 has been applied to ESBWR.
Issue 155.2	Establish Licensing Requirements for Non-Operating Facilities	(5)
Issue 155.3	Improve Design Requirements for Nuclear Facilities	(3)
Issue 155.4	Improve Criticality Calculations	(3)
Issue 155.5	More Realistic Severe Accident Scenario	(3)
Issue 155.6	Improve Decontamination Regulations	(3)
Issue 155.7	Improve Decommissioning Regulations	(3)
Issue 156	Systematic Evaluation Program	See rows below for discussion of various subtasks.
Issue 156.1.1	Settlement of Foundations and Buried Equipment	(3)
Issue 156.1.2	Dam Integrity and Site Flooding	(3)
Issue 156.1.3	Site Hydrology and Ability to Withstand Floods	(3)
Issue 156.1.4	Industrial Hazards	(3)
Issue 156.1.5	Tornado Missiles	(3)
Issue 156.1.6	Turbine Missiles	(3)
Issue 156.2.1	Severe Weather Effects on Structures	(3)

Table 1.11-1 (continued)

Action Plan Item/Issue Number	Description	Associated Location(s) or Technical Resolution
Issue 156.2.2	Design Codes, Criteria, and Load Combinations	(3)
Issue 156.2.3	Containment Design and Inspection	(3)
Issue 156.2.4	Seismic Design of Structures, Systems, and Components	(3)
Issue 156.3.1.1	Shutdown Systems	(3, 6) Safety concerns addressed in resolution of Issue A-45.
Issue 156.3.1.2	Electrical Instrumentation and Controls	(3, 6) Safety concerns addressed in resolution of Issue A-45.
Issue 156.3.2	Service and Cooling Water Systems	(3)
Issue 156.3.3	Ventilation Systems	(3, 6) Covered by Issues 83, 106, 136, 143 and 148.
Issue 156.3.4	Isolation of High and Low Pressure Systems	(3, 6) Safety concern addressed in resolution of Issue 105.
Issue 156.3.5	Automatic ECCS Switchover	(1, 6) Covered in the resolution of Issue 24. There is no ECCS switchover function in the ESBWR.
Issue 156.3.6.1	Emergency AC Power	(3, 6) Safety concern addressed in resolution of Issues A-44, 128 and B-56.
Issue 156.3.6.2	Emergency DC Power	(3)
Issue 156.3.8	Shared Systems	(1, 3, 6) Systems of potential concern already addressed by Issues 43, 130, 153 and A-44. ESBWR is a single unit plant with no shared systems.
Issue 156.4.1	RPS and ESFS Isolation	(4) Addressed through satisfying the provisions of IEEE 279-1971, which is achieved through compliance with Regulatory Guide 1.153. As indicated in Table 1.9-21, the ESBWR complies with Regulatory Guide 1.153. See Subsection 7.1.6 for further details.

Table 1.11-1 (continued)

Action Plan Item/Issue Number	Description	Associated Location(s) or Technical Resolution
Issue 156.4.2	Testing of the RPS and ESFS	(4, 6) Covered by ASME Code requirements in accordance with 10 CFR 50.55(a) and the resolution of Issue 120.
Issue 156.6.1	Pipe Break Effects on Systems and Components	(4) The ESBWR design considers the potential effects of pipe breaks on systems and components. Section 3.6, "Protection Against Dynamic Effects Associated with the Postulated Rupture of Piping," addresses the protection of ESBWR components against dynamic effects such as pipe whip and jet impingement that are associated with postulated piping ruptures. An analysis of pipe break events is performed to identify those safety-related systems, components, and equipment that are required to perform protective actions to mitigate the consequences of the pipe break event within acceptable limits. By means of design features such as separation, barriers, and pipe whip restraints, adequate protection is provided against the effects of pipe break events for safety-related items to an extent that their ability to shut down the plant safely or mitigate the consequences of the postulated pipe failure would not be impaired. Subsection 3.6.1.1 describes the criteria, assumptions, objectives and approach for establishing protection requirements for safety-related equipment. Subsection 3.6.1.3 describes the design evaluation process and the types of protection measures that are considered. Subsection 3.6.2.1 and its subsections establish the criteria for the location and configuration of postulated breaks and cracks. Subsection 3.6.2.2 describes the analytical methods used to define blowdown forcing functions and to perform the pipe-whip dynamic response analyses. Subsection 3.6.2.3.1 discusses the methods and criteria used to evaluate the jet effects resulting from the postulated breaks of high-energy piping on safety-related structures, systems and components (SSC). Subsection 3.6.2.3.2 provides the criteria and methods used to evaluate the effects of pipe displacements on safety-related SSC following a

Table 1.11-1 (continued)

Action Plan Item/Issue Number	Description	Associated Location(s) or Technical Resolution
		postulated pipe rupture. Section 3.8, "Seismic Category I Structures," addresses all design requirements for structures that contain safety-related components. These structures are designed to withstand the loads resulting from the dynamic effects of pipe breaks. Subsection 3.8.1.3.5 defines the specific abnormal design loads resulting from pipe breaks that are considered in the design of the containment and its internal structures. Design loads affecting the Reactor Building structure as a result of pipe breaks are summarized in Subsection 3.8.4.3.1. Section 3.9, "Mechanical Systems and Components," addresses the analysis methods used to evaluate Seismic Category I components and supports. Subsection 3.9.1.4 refers to Tables 3.9-1 and 3.9-2 for definitions of the requirements for the assumed number of cycles associated with each design basis event and load combination requirements, respectively.
Issue 157	Containment Performance	(4) Resolution is specific to the type of containment design. Supplement 3 of Generic Letter 88-20 requested individual licensees of Mark II and Mark III containments to consider insights and improvements identified in the Containment Improvement Program, but did not identify any generic improvements. The ESBWR containment design, as described in Section 6.2, differs from those considered as part of this issue.
Issue 158	Performance of Safety-Related Power-Operated Valves under Design Basis Conditions	(4)
Issue 159	Qualification of Safety-Related Pumps While Running on Minimum Flow	(3)

Table 1.11-1 (continued)

Action Plan Item/Issue Number	Description	Associated Location(s) or Technical Resolution
Issue 160	Spurious Actuations of Instrumentation upon Restoration of Power	(3)
Issue 161	Use of Non-Safety-Related Power Supplies in Safety-Related Circuits	(3)
Issue 162	Inadequate Technical Specifications for Shared Systems at Multiplant Sites When One Unit Is Shutdown	(1, 3) The ESBWR is a single unit plant design with no shared systems.
Issue 163	Multiple Steam Generator Tube Leakage	(1) The ESBWR is a direct cycle plant and does not have Steam Generators.
Issue 164	Neutron Fluence in Reactor Vessel	(3) Safety concern addressed in Draft Regulatory Guide DG-1025, which has since been issued as Regulatory Guide 1.190. As indicated in Table 1.9-21, the ESBWR complies with Regulatory Guide 1.190.
Issue 165	Spring-Actuated Safety and Relief Valve Reliability	(4)
Issue 166	Adequacy of Fatigue Life of Metal Components	(4) See also related Issue 190.
Issue 167	Hydrogen Storage Facility Separation	(9)
Issue 168	Environmental Qualification of Electrical Equipment	(4)
Issue 169	BWR MSIV Common Mode Failure Due to Loss of Accumulator Pressure	(3)

Table 1.11-1 (continued)

Action Plan Item/Issue Number	Description	Associated Location(s) or Technical Resolution
Issue 170	Fuel Damage Criteria for High Burnup Fuel	(4)
Issue 171	ESF Failure from LOOP Subsequent to a LOCA	(4)
Issue 172	Multiple System Responses Program	(3, 6) Of the 21 Multiple System Responses Program concerns, eleven were concluded to be covered in the Individual Plant Examination or Individual Plant Examination for External Events Programs. The remaining ten concerns were dropped from further consideration as new and separate issues because eight were included in the scope of existing generic issues or other ongoing NRC programs, one (Item 4) had negligible risk reduction potential, and one (Item 9) was deemed to be a compliance concern.
Issue 173	Spent Fuel Storage Pool	See rows below for discussion of various subtasks.
Issue 173.A	Operating Facilities	(4)
Issue 173.B	Permanently Shutdown Facilities	(1) Not applicable to the ESBWR Design Certification Process.
Issue 174	Fastener Gaging Practices	See rows below for discussion of various subtasks.
Issue 174.A	SONGS Employees' Concern	(4)
Issue 174.B	Johnson Gage Company Concern	(4)
Issue 175	Nuclear Power Plant Shift Staffing	(4)
Issue 176	Loss of Fill-Oil in Rosemount Transmitters	(4)
Issue 177	Vehicle Intrusion at TMI	(8)

Table 1.11-1 (continued)

Action Plan Item/Issue Number	Description	Associated Location(s) or Technical Resolution
Issue 178	Effect of Hurricane Andrew on Turkey Point	(5)
Issue 179	Core Performance.	(5)
Issue 180	Notice of Enforcement Discretion.	(5)
Issue 181	Fire Protection	(5)
Issue 182	General Electric Extended Power Uprate	(5)
Issue 183	Cycle-Specific Parameter Limits in Technical Specifications	(5)
Issue 184	Endangered Species	(7)
Issue 185	Control of Recriticality Following Small-Break LOCAs in PWRs	(1) This is a PWR issue that is not applicable to ESBWR.
Issue 186	Potential Risk and Consequences of Heavy Load Drops in Nuclear Power Plants	See Section 9.1 and Subsections 15.4.1, "Fuel Handling Accident," and 15.4.10, "Spent Fuel Cask Drop Accident."
Issue 187	The Potential Impact of Postulated Cesium Concentration on Equipment Qualification	(3)
Issue 188	Steam Generator Tube Leaks or Ruptures, Concurrent with Containment Bypass from Main Steam Line or Feedwater Line Breaches	(1) The ESBWR is a direct cycle plant and does not have a Steam Generator.

Table 1.11-1 (continued)

Action Plan Item/Issue Number	Description	Associated Location(s) or Technical Resolution
Issue 189	Susceptibility of Ice Condenser and Mark III Containments to Early Failure from Hydrogen Combustion During a Severe Accident	(1) The ESBWR Containment is considerably different from Ice Condenser Containment. The ESBWR Containment differs from the Mark III Containment in that it is inerted to prevent hydrogen combustion.
Issue 190	Fatigue Evaluation of Metal Components for 60-Year Plant Life	(4)
Issue 191	Assessment of Debris Accumulation on PWR Sump Performance	(1) The ESBWR does not have an ECCS pump, and no sump provides ECCS water.
Issue 192	Secondary Containment Drawdown Time	(3)
Issue 193	BWR ECCS Suction Concerns	(1) The ESBWR does not have an ECCS pump, and does not take ECCS water from the suppression pool.
Issue 194	Implications of Updated Probabilistic Seismic Hazard Estimates	(3)
Issue 195	Hydrogen Combustion in BWR Piping	(3) This issue has been addressed for typical piping and components in GE Service Information Letter SIL No. 643, "Potential for Radiolytic Gas Detonation," dated June 14, 2002. Piping and components within the ICS and PCCS that are subject to hydrogen accumulation are designed to withstand combustion as described in Section 6.2.2.
Issue 196	Boral Degradation	(1) GEH does not use boral in the design of spent fuel storage racks for ESBWR.
Issue 197	Iodine Spiking Phenomena	(1) PWR issue.
Issue 198	Hydrogen Combustion in PWR Piping	(1) PWR issue.

Table 1.11-1 (continued)

Action Plan Item/Issue Number	Description	Associated Location(s) or Technical Resolution
Issue 199	Implications of Updated Probabilistic Seismic Hazard Estimates in Central and Eastern United States	This issue was considered and addressed during the development of the horizontal and vertical SSE ground response spectra at foundation level requirements for the ESBWR reference site (i.e., Figures 2.0-1 and 2.0-2).
Issue 200	Tin Whiskers	In accordance with the discussion in NRC Information Notice 2005-25, this issue is addressed for ESBWR by requiring all DCIS components to be manufactured using 3% or greater lead concentration in the solder and/or a conforming coating.
	HUMAN FACTORS ISSUES	Human Factors Issues are addressed in Chapter 18
HF1.1	Shift Staffing	(8) This issue is considered resolved through compliance with 10 CFR 50.54; SRP Section 13.1.2; and Regulatory Guide (RG) 1.114, Rev. 2, consistent with the NRC resolution.
HF1.2	Engineering Expertise on Shift	(4)
HF1.3	Guidance on Limits and Conditions of Shift Work	(4)
HF2.1	Evaluate Industry Training	(5)
HF2.2	Evaluate INPO Accreditation	(5)
HF2.3	Revise SRP Section 13.2	(5)
HF3.1	Develop Job Knowledge Catalog	(4)
HF3.2	Develop License Examination Handbook	(4)

Table 1.11-1 (continued)

Action Plan Item/Issue Number	Description	Associated Location(s) or Technical Resolution
HF3.3	Develop Criteria for Nuclear Power Plant Simulators	(6) This issue is covered in TMI Action Plan Item I.A.4.2(4). See Appendix 1A.
HF3.4	Examination Requirements	(6) This issue is covered in TMI Action Plan Item I.A.2.6(1).
HF3.5	Develop Computerized Exam System	(5)
HF4.1	Inspection Procedure for Upgraded Emergency Operating Procedures	(4)
HF4.2	Procedures Generation Package Effectiveness Evaluation	(5)
HF4.3	Criteria for Safety-Related Operator Actions	(6) This item is covered in Issue B-17.
HF4.4	Guidelines for Upgrading Other Procedures	(4)
HF4.5	Application of Automation and Artificial Intelligence	(6) This item is covered in Item HF5.2.
HF5.1	Local Control Stations	(4) The ESBWR on-going program for the design of instrumentation and control systems and man-machine interface systems incorporates all the applicable ALWR human factors engineering requirements. The design bases, approach, and acceptance criteria are given in Chapter 18, which includes formation of an interdisciplinary design review group and reviews for site-specific design and construction work. This issue is considered resolved for the ESBWR Standard Plant design.

Table 1.11-1 (continued)

Action Plan Item/Issue Number	Description	Associated Location(s) or Technical Resolution
HF5.2	Review Criteria for Human Factors Aspects of Advanced Controls and Instrumentation	(4) The ESBWR on-going program for the design of instrumentation and control systems and man-machine interface systems incorporates all the applicable ALWR human factors engineering requirements. The design bases, approach, and acceptance criteria are given in Chapter 18, which includes formation of an interdisciplinary design review group and reviews for site-specific design and construction work. This issue is considered resolved for the ESBWR Standard Plant design.
HF5.3	Evaluation of Operational Aid Systems	(6) This issue is covered in Item HF5.2.
HF5.4	Computers and Computer Displays	(6) This issue is covered in Item HF5.2.
HF6.1	Develop Regulatory Position on Management and Organization	(6) This item is covered in TMI Action Plan Items I.B.1.1(1, 2, 3 and 4).
HF6.2	Regulatory Position on Management and Organization at Operating Reactors	(6) This item is covered in TMI Action Plan Items I.B.1.1(1, 2, 3 and 4).
HF7.1	Human Error Data Acquisition	(5)
HF7.2	Human Error Data Storage and Retrieval	(5)
HF7.3	Reliability Evaluation Specialist Aids	(5)
HF7.4	Safety Event Analysis Results Application	(5)
HF8	Maintenance and Surveillance Program	(4)
	CHERNOBYL ISSUES	The Chernobyl issues listed in NUREG-0933 Table II are all not Generic Issues (5) or are not applicable to the ESBWR design (1).