GE Hitachi Nuclear Energy

26A6641AB
Revision 7
March 2010

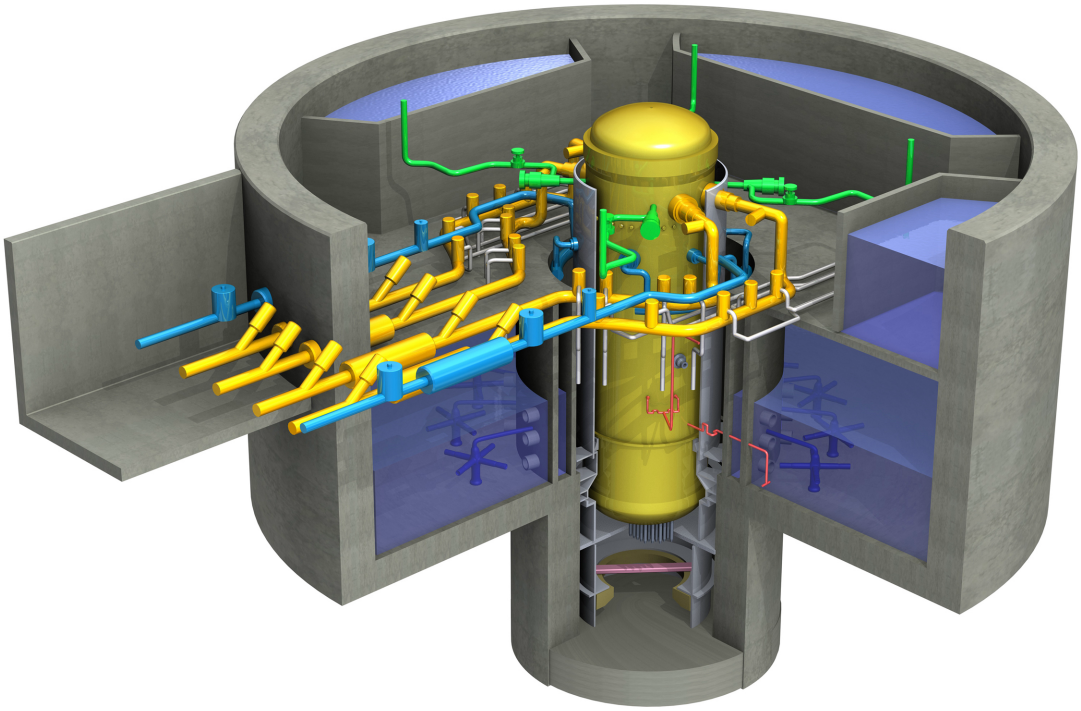

ESBWR Design Control Document
Tier 1

NOTICE

The design, engineering, and other information contained in this document is furnished by GE-Hitachi Nuclear Energy Americas LLC (GEH) for the purpose of supporting the GEH application to the United States Nuclear Regulatory Commission (NRC) for certification of the ESBWR nuclear plant design pursuant to Title 10 Code of Federal Regulations (10 CFR) Part 52.

No use of or right to copy any of the information contained in this document, other than by the NRC and its contractors in support of GEH application, is authorized except by contract with GEH. The information provided in this document is part of and dependent upon a larger set of knowledge, technology, and intellectual property rights pertaining to standardized, nuclear powered, electric generating facilities that utilize the design certification, as designed and certified to U.S. Codes, Standards, and Regulations by GEH, and referred to as the ESBWR nuclear power plant design. Without access and a GEH grant of rights to that larger set of knowledge, technology, and intellectual property rights, this document is not practically or rightfully usable by others, except by the NRC or through contractual agreements with Combined License Applicants and Licensees or customers and participating utilities.

Contents

1. Introduction 1.1-1
1.1 Definitions and General Provisions 1.1-1
1.1.1 Definitions 1.1-1
1.1.2 General Provisions 1.1-6
1.1.2.1 Treatment of Individual Items 1.1-6
1.1.2.2 Implementation of ITAAC 1.1-6
1.1.2.3 Discussion of Matters Related to Operations 1.1-7
1.1.2.4 Interpretation of Figures 1.1-7
1.1.2.5 Rated Reactor Core Thermal Power 1.1-7
1.2 Figure Legend 1.2-1
1.3 Table Legend 1.3-1
1.4 Design Acceptance Criteria 1.4-1
2. Design Descriptions And ITAAC 2.1-1
2.1 Nuclear Steam Supply 2.1-1
2.1.1 Reactor Pressure Vessel and Internals 2.1-1
2.1.2 Nuclear Boiler System 2.1-13
2.2 Instrumentation and Control Systems 2.2-1
2.2.1 Rod Control and Information System 2.2-1
2.2.2 Control Rod Drive System 2.2-15
2.2.3 Feedwater Control System 2.2-39
2.2.4 Standby Liquid Control System 2.2-46
2.2.5 Neutron Monitoring System 2.2-72
2.2.6 Remote Shutdown System 2.2-78
2.2.7 Reactor Protection System 2.2-82
2.2.8 Plant Automation System 2.2-89
2.2.9 Steam Bypass and Pressure Control System 2.2-90
2.2.10 Safety-Related Distributed Control and Information System 2.2-94
2.2.11 Nonsafety-Related Distributed Control and Information System 2.2-96
2.2.12 Leak Detection and Isolation System 2.2-98
2.2.13 Engineered Safety Features Safety System Logic and Control 2.2-110
2.2.14 Diverse Instrumentation and Controls 2.2-116
2.2.15 Instrumentation & Control Compliance With IEEE Std. 603 ..... 2.2-125
2.2.16 High Pressure Control Rod Drive Isolation Bypass Function Independent Control Platform 2.2-157
2.3 Radiation Monitoring Systems 2.3-1
2.3.1 Process Radiation Monitoring System 2.3-1
2.3.2 Area Radiation Monitoring System 2.3-12
2.4 Core Cooling Systems Used For Abnormal Events 2.4-1
2.4.1 Isolation Condenser System 2.4-1
2.4.2 Emergency Core Cooling System - Gravity-Driven Cooling System 2.4-28
2.5 Reactor Servicing Equipment 2.5-1
2.5.1 Fuel Service Equipment 2.5-2
2.5.2 Miscellaneous Service Equipment 2.5-3
2.5.3 Reactor Pressure Vessel Servicing Equipment 2.5-4
2.5.4 RPV Internals Servicing Equipment 2.5-5
2.5.5 Refueling Equipment 2.5-6
2.5.6 Fuel Storage Facility 2.5-12
2.5.7 Under-Vessel Servicing Equipment 2.5-16

2.5.8 FMCRD Maintenance Area 2.5-17
2.5.9 Fuel Cask Cleaning 2.5-18
2.5.10 Fuel Transfer System 2.5-19
2.5.11 (Deleted) 2.5-23
2.5.12 (Deleted) 2.5-24
2.6 Reactor And Containment Auxiliary Systems 2.6-1
2.6.1 Reactor Water Cleanup/Shutdown Cooling System 2.6-1
2.6.2 Fuel And Auxiliary Pools Cooling System 2.6-17
2.7 (Deleted) 2.7-1
2.7.1 (Deleted) 2.7-1
2.7.2 (Deleted) 2.7-1
2.7.3 (Deleted) 2.7-1
2.8 (Deleted) 2.8-1
2.8.1 (Deleted) 2.8-1
2.8.2 (Deleted) 2.8-2
2.9 (Deleted) 2.9-1
2.10 Radioactive Waste Management System 2.10-1
2.10.1 Liquid Waste Management System 2.10-1
2.10.2 Solid Waste Management System 2.10-5
2.10.3 Gaseous Waste Management System 2.10-8
2.11 Power Cycle 2.11-1
2.11.1 Turbine Main Steam System 2.11-1
2.11.2 Condensate and Feedwater System 2.11-12
2.11.3 Condensate Purification System 2.11-16
2.11.4 Main Turbine 2.11-17
2.11.5 Turbine Gland Seal System 2.11-22
2.11.6 Turbine Bypass System 2.11-25
2.11.7 Main Condenser 2.11-28
2.11.8 Circulating Water System 2.11-30
2.11.9 Power Cycle Auxiliary Systems 2.11-31
2.12 Auxiliary Systems 2.12-1
2.12.1 Makeup Water System 2.12-1
2.12.2 Condensate Storage and Transfer System 2.12-3
2.12.3 Reactor Component Cooling Water System 2.12-4
2.12.4 Turbine Component Cooling Water System 2.12-7
2.12.5 Chilled Water System 2.12-8
2.12.6 Oxygen Injection System 2.12-11
2.12.7 Plant Service Water System 2.12-12
2.12.8 Service Air System 2.12-15
2.12.9 Instrument Air System 2.12-17
2.12.10 High Pressure Nitrogen Supply System 2.12-18
2.12.11 Auxiliary Boiler System 2.12-20
2.12.12 Potable Water and Sanitary Waste 2.12-21
2.12.13 Hydrogen Water Chemistry System 2.12-22
2.12.14 Process Sampling System 2.12-23
2.12.15 Zinc Injection System 2.12-24
2.12.16 Freeze Protection 2.12-25
2.12.17 Station Water System 2.12-26
2.13 Electrical Systems 2.13-1
2.13.1 Electric Power Distribution System 2.13-1
2.13.2 (Deleted) 2.13-16

2.13.3 Direct Current Power Supply 2.13-17
2.13.4 Standby Onsite AC Power Supply 2.13-32
2.13.5 Uninterruptible AC Power Supply 2.13-40
2.13.6 (Deleted) 2.13-50
2.13.7 Communications System 2.13-51
2.13.8 Lighting Power Supply 2.13-53
2.13.9 Grounding and Lightning Protection System 2.13-57
2.14 Power Transmission 2.14-1
2.15 Containment, Cooling and Environmental Control Systems 2.15-1
2.15.1 Containment System 2.15-1
2.15.2 Containment Vessel 2.15-37
2.15.3 Containment Internal Structures 2.15-38
2.15.4 Passive Containment Cooling System 2.15-43
2.15.5 Containment Inerting System 2.15-54
2.15.6 Drywell Cooling System 2.15-57
2.15.7 Containment Monitoring System 2.15-59
2.15.8 Passive Autocatalytic Recombiner 2.15-68
2.16 Structures and Servicing Systems/Equipment 2.16-1
2.16.1 Cranes, Hoists and Elevators 2.16-1
2.16.2 Heating, Ventilating and Air Conditioning 2.16-6
2.16.2.1 Reactor Building HVAC 2.16-6
2.16.2.2 Control Building HVAC System 2.16-7
2.16.2.3 Emergency Filter Units 2.16-9
2.16.2.4 Turbine Building HVAC System 2.16-10
2.16.2.5 Fuel Building HVAC System 2.16-10
2.16.2.6 Radwaste Building HVAC System 2.16-11
2.16.2.7 Electrical Building HVAC System 2.16-11
2.16.2.8 Other Building HVAC Systems 2.16-12
2.16.3 Fire Protection System 2.16-46
2.16.3.1 Fire Barriers 2.16-53
2.16.4 Equipment and Floor Drain System 2.16-56
2.16.5 Reactor Building 2.16-58
2.16.6 Control Building 2.16-86
2.16.7 Fuel Building 2.16-101
2.16.8 Turbine Building 2.16-117
2.16.9 Radwaste Building 2.16-120
2.16.10 Service Building 2.16-123
2.16.11 Ancillary Diesel Building 2.16-126
2.16.12 Fire Water Service Complex 2.16-129
2.16.13 Electrical Building 2.16-132
2.16.14 Service Water Building 2.16-135
2.17 Intake Structure and Servicing Equipment 2.17-1
2.17.1 Intake and Discharge Structure 2.17-1
2.18 Yard Structures and Equipment 2.18-1
2.18.1 Oil Storage and Transfer Systems 2.18-1
2.18.2 Site Security 2.18-2
2.19 Plant Security System 2.19-1
3. Non-System Based Material 3.1-1
3.1 Design of piping systems and components 3.1-1
3.2 Software Development 3.2-1
3.3 Human Factors Engineering 3.3-1

3.4 Radiation Protection 3.4-1
3.5 Initial Test Program 3.5-1
3.6 Design Reliability Assurance Program 3.6-1
3.7 Post Accident Monitoring Instrumentation 3.7-1
3.8 Environmental and Seismic Qualification of Mechanical and Electrical Equipment 3.8-1
4. Interface Material 4.1-1
4.1 Plant Service Water System 4.1-1
4.2 Offsite Power 4.2-2
5. Site Parameters 5.1-1
5.1 Scope and Purpose 5.1-1

List of Tables

Table 2.1.1-1 Reactor Pressure Vessel and Internals Mechanical Equipment 2.1-3
Table 2.1.1-2 Key Dimensions of RPV Components and Acceptable Variations..... 2.1-4
Table 2.1.1-3 ITAAC For The Reactor Pressure Vessel and Internals..... 2.1-5
Table 2.1.2-1 Nuclear Boiler System Mechanical Equipment 2.1-17
Table 2.1.2-2 Nuclear Boiler System Electrical Equipment..... 2.1-21
Table 2.1.2-3 ITAAC For The Nuclear Boiler System..... 2.1-23
Table 2.2.1-1 RC&IS Functional Arrangement..... 2.2-2
Table 2.2.1-2 RC&IS Major Functional Groups 2.2-3
Table 2.2.1-3 RC&IS Automatic Functions, Initiators, and Associated Interfacing Systems. 2.2-7
Table 2.2.1-4 RC&IS Rod Block Functions 2.2-9
Table 2.2.1-5 RC&IS Controls, Interlocks, and Bypasses..... 2.2-11
Table 2.2.1-6 ITAAC For The Rod Control and Information System..... 2.2-12
Table 2.2.2-1 CRD System Functional Arrangement..... 2.2-18
Table 2.2.2-2 CRD Maximum Allowable Scram Times for Vessel Bottom Pressures Below 7.481 MPaG (1085 psig) 2.2-19
Table 2.2.2-3 CRD System Automatic Functions, Initiators, and Associated Interfacing Systems 2.2-20
Table 2.2.2-4 CRD System Controls and Interlocks..... 2.2-21
Table 2.2.2-5 Control Rod Drive System Mechanical Equipment 2.2-24
Table 2.2.2-6 Control Rod Drive System Electrical Equipment 2.2-26
Table 2.2.2-7 ITAAC For The Control Rod Drive System 2.2-28
Table 2.2.3-1 FWCS Functional Arrangement..... 2.2-40
Table 2.2.3-2 FWCS Automatic Functions, Initiators, and Associated Interfacing Systems 2.2-41
Table 2.2.3-3 FWCS Controls 2.2-42
Table 2.2.3-4 ITAAC For The Feedwater Control System 2.2-43
Table 2.2.4-1 (Deleted)..... 2.2-49
Table 2.2.4-2 SLC System Automatic Functions, Initiators, and Associated Interfacing Systems 2.2-50
Table 2.2.4-3 SLC System Controls and Interlocks 2.2-51
Table 2.2.4-4 SLC System Mechanical Equipment..... 2.2-52
Table 2.2.4-5 SLC System Electrical Equipment 2.2-57
Table 2.2.4-6 ITAAC For The Standby Liquid Control System 2.2-60
Table 2.2.5-1 NMS Functional Arrangement 2.2-73
Table 2.2.5-2 NMS Functions, Initiators, and Associated Interfacing Systems 2.2-74
Table 2.2.5-3 NMS Controls, Interlocks, and Bypasses 2.2-75
Table 2.2.5-4 ITAAC For The Neutron Monitoring System 2.2-76
Table 2.2.6-1 RSS Functional Arrangement..... 2.2-79
Table 2.2.6-2 RSS Controls 2.2-80
Table 2.2.6-3 ITAAC For The Remote Shutdown System..... 2.2-81
Table 2.2.7-1 RPS Functional Arrangement..... 2.2-83
Table 2.2.7-2 RPS Automatic Functions, Initiators, and Associated Interfacing Systems.... 2.2-84
Table 2.2.7-3 RPS Controls, Interlocks (System Interfaces), and Bypasses 2.2-85
Table 2.2.7-4 ITAAC For The Reactor Protection System 2.2-86
Table 2.2.9-1 SB&PC System Functional Arrangement 2.2-91

Table 2.2.9-2 SB&PC System Functions and Initiating Conditions....2.2-91
Table 2.2.9-3 ITAAC For The Steam Bypass and Pressure Control System....2.2-92
Table 2.2.10-1 Q-DCIS Platforms....2.2-95
Table 2.2.11-1 N-DCIS Network Segments....2.2-97
Table 2.2.12-1 (Deleted)....2.2-100
Table 2.2.12-2 LD&IS Isolation Function Monitored Variables....2.2-101
Table 2.2.12-3 LD&IS Leakage Source Monitored Variables....2.2-104
Table 2.2.12-4 LD&IS Controls, Interlocks, and Bypasses....2.2-107
Table 2.2.12-5 ITAAC For The Leak Detection and Isolation System....2.2-108
Table 2.2.13-1 SSLC/ESF Functional Arrangement....2.2-111
Table 2.2.13-2 SSLC/ESF Automatic Functions, Initiators, and Associated Interfacing Systems....2.2-112
Table 2.2.13-3 SSLC/ESF Controls, Interlocks, and Bypasses....2.2-113
Table 2.2.13-4 ITAAC For The Engineered Safety Features Safety System Logic and Control (SSLC/ESF)....2.2-114
Table 2.2.14-1 Diverse Instrumentation and Control Systems Functional Arrangement....2.2-118
Table 2.2.14-2 Diverse Instrumentation and Controls Functions, Initiators, and Interfacing Systems [1]....2.2-119
Table 2.2.14-3 Diverse Instrumentation and Controls Controls, Interlocks and Bypasses[1] 2.2-121
Table 2.2.14-4 ITAAC For The Diverse Instrumentation and Controls....2.2-122
Table 2.2.15-2 ITAAC For IEEE Std. 603 Compliance Confirmation....2.2-135
Table 2.2.16-1 HP CRD Isolation Bypass Function ICP Functional Arrangement....2.2-158
Table 2.2.16-2 HP CRD Isolation Bypass Function ICP Automatic Functions, Initiators, and Associated Interfacing Systems....2.2-159
Table 2.2.16-3 HP CRD Isolation Bypass Function ICP Controls, Interlocks, and Bypasses..2.2-160
Table 2.2.16-4 ITAAC For The HP CRD Isolation Bypass Function ICP....2.2-161
Table 2.3.1-1 Process Radiation Monitors (Shown on Figure 2.3.1-1)....2.3-3
Table 2.3.1-2 ITAAC For The Process Radiation Monitoring System....2.3-7
Table 2.3.2-1 ARM Locations....2.3-13
Table 2.3.2-2 ITAAC For Area Radiation Monitoring System....2.3-16
Table 2.4.1-1 ICS Mechanical Equipment....2.4-5
Table 2.4.1-2 ICS Electrical Equipment....2.4-11
Table 2.4.1-3 ITAAC For The Isolation Condenser System....2.4-15
Table 2.4.2-1 GDCS Mechanical Equipment....2.4-31
Table 2.4.2-2 GDCS Electrical Equipment....2.4-39
Table 2.4.2-3 ITAAC For The Emergency Core Cooling System – Gravity-Driven Cooling System....2.4-45
Table 2.5.5-1 ITAAC For The Refueling Equipment....2.5-7
Table 2.5.6-1 ITAAC For The Fuel Storage Facility....2.5-13
Table 2.5.10-1 ITAAC For The Fuel Transfer System....2.5-20
Table 2.6.1-1 Reactor Water Cleanup/Shutdown Cooling System....2.6-3
Table 2.6.1-2 ITAAC For The Reactor Water Cleanup/Shutdown Cooling System....2.6-10
Table 2.6.2-1 FAPCS Mechanical Equipment....2.6-19
Table 2.6.2-2 ITAAC For The Fuel and Auxiliary Pools Cooling System....2.6-24
Table 2.10.1-1 Major Equipment in LWMS....2.10-2

Table 2.10.1-2 ITAAC For The Liquid Waste Management System 2.10-4
Table 2.10.2-1 SWMS Tanks Nominal Capacity (Volume) 2.10-6
Table 2.10.2-2 ITAAC For Solid Waste Management System 2.10-7
Table 2.10.3-1 ITAAC For The Gaseous Waste Management System 2.10-9
Table 2.11.1-1 ITAAC For The Turbine Main Steam System 2.11-3
Table 2.11.2-1 ITAAC For The Condensate and Feedwater System 2.11-13
Table 2.11.4-1 Additional Equipment Protected from Turbine Missiles 2.11-18
Table 2.11.4-2 ITAAC For The Main Turbine 2.11-19
Table 2.11.5-1 ITAAC For The Turbine Gland Seal System 2.11-23
Table 2.11.6-1 ITAAC For The Turbine Bypass System 2.11-26
Table 2.11.7-1 ITAAC For The Main Condenser 2.11-29
Table 2.12.1-1 (Deleted) 2.12-2
Table 2.12.3-1 ITAAC For The Reactor Component Cooling Water System 2.12-5
Table 2.12.5-1 ITAAC For The Chilled Water System 2.12-9
Table 2.12.7-1 ITAAC For The Plant Service Water System 2.12-13
Table 2.12.8-1 (Deleted) 2.12-16
Table 2.12.10-1 (Deleted) 2.12-19
Table 2.13.1-1 Electrical Power Distribution System Equipment 2.13-3
Table 2.13.1-2 ITAAC For The Electric Power Distribution System 2.13-7
Table 2.13.3-1 Direct Current Power Supply System Equipment 2.13-19
Table 2.13.3-2 Direct Current Power Supply Equipment Displays/Status Indication 2.13-22
Table 2.13.3-3 ITAAC For The Direct Current Power Supply 2.13-24
Table 2.13.4-1 Equipment Location 2.13-34
Table 2.13.4-2 ITAAC For The Standby On-site AC Power Supply 2.13-35
Table 2.13.5-1 Uninterruptible AC Power Soppy System Equipment 2.13-42
Table 2.13.5-2 ITAAC For The Uninterruptible AC Power Supply 2.13-43
Table 2.13.7-1 (Deleted) 2.13-52
Table 2.13.8-1 ITAAC For The Lighting Power Supply 2.13-54
Table 2.13.9-1 ITAAC For The Grounding and Lightning Protection System 2.13-58
Table 2.15.1-1a Containment System Penetrations[1] and Equipment 2.15-4
Table 2.15.1-1b Containment Mechanical Equipment 2.15-15
Table 2.15.1-1c Electrical Equipment 2.15-16
Table 2.15.1-1d Containment System Penetration Isolation Valve Closure Times 2.15-17
Table 2.15.1-2 ITAAC For The Containment System 2.15-22
Table 2.15.3-1 Containment Internal Structures Locations 2.15-39
Table 2.15.3-2 ITAAC For The Containment Internal Structures 2.15-40
Table 2.15.4-1 Passive Containment Cooling System Mechanical Equipment 2.15-45
Table 2.15.4-2 ITAAC For The Passive Containment Cooling System 2.15-46
Table 2.15.5-1 Containment Inerting System Electrical Equipment 2.15-55
Table 2.15.5-2 ITAAC For The Containment Inerting System 2.15-56
Table 2.15.6-1 (Deleted) 2.15-58
Table 2.15.6-2 (Deleted) 2.15-58
Table 2.15.7-1 Containment Monitoring System Electrical Equipment 2.15-61
Table 2.15.7-2 ITAAC For The Containment Monitoring System 2.15-64
Table 2.15.8-1 ITAAC For The Passive Autocatalytic Recombiner 2.15-69
Table 2.16.1-1 ITAAC For Cranes, Hoists and Elevators 2.16-2

Table 2.16.2-1 Reactor Building HVAC System Safety-Related Equipment 2.16-13
Table 2.16.2-2 ITAAC For The Reactor Building HVAC 2.16-14
Table 2.16.2-3 Control Building HVAC System Safety-Related Equipment 2.16-19
Table 2.16.2-4 ITAAC For The Control Building Habitability HVAC Subsystem 2.16-20
Table 2.16.2-5 Emergency Filter Units..... 2.16-25
Table 2.16.2-6 ITAAC For The Emergency Filter Units..... 2.16-26
Table 2.16.2-7 ITAAC For The Turbine Building Ventilation System..... 2.16-30
Table 2.16.2-8 Fuel Building HVAC System Safety-Related Equipment..... 2.16-31
Table 2.16.2-9 ITAAC For The Fuel Building HVAC..... 2.16-32
Table 2.16.2-10 ITAAC For The Electrical Building Ventilation System 2.16-34
Table 2.16.3-1 Fire Protection System Equipment..... 2.16-47
Table 2.16.3-2 ITAAC For The Fire Protection System 2.16-48
Table 2.16.3.1-1 ITAAC For Fire Barriers 2.16-54
Table 2.16.4-1 ITAAC For The Equipment and Floor Drain System 2.16-57
Table 2.16.5-1 Critical Dimensions of Reactor Building – Part 1 ..... 2.16-60
Table 2.16.5-1 Critical Dimensions of Reactor Building – Part 2 ..... 2.16-69
Table 2.16.5-2 ITAAC For The Reactor Building..... 2.16-70
Table 2.16.6-1 Critical Dimensions of Control Building – Part 1 ..... 2.16-88
Table 2.16.6-1 Critical Dimensions of Control Building – Part 2 ..... 2.16-90
Table 2.16.6-2 ITAAC For Control Building 2.16-91
Table 2.16.7-1 Critical Dimensions of Fuel Building – Part 1 ..... 2.16-103
Table 2.16.7-1 Critical Dimensions of Fuel Building – Part 2 ..... 2.16-106
Table 2.16.7-2 ITAAC For The Fuel Building 2.16-107
Table 2.16.8-1 ITAAC For The Turbine Building 2.16-118
Table 2.16.9-1 ITAAC For The Radwaste Building..... 2.16-121
Table 2.16.10-1 ITAAC For The Service Building 2.16-124
Table 2.16.11-1 ITAAC For The Ancillary Diesel Building..... 2.16-127
Table 2.16.12-1 ITAAC For The Firewater Service Complex 2.16-130
Table 2.16.13-1 ITAAC For The Electrical Building..... 2.16-133
Table 2.16.14-1 ITAAC For The Service Water Building 2.16-136
Table 2.19-1 ITAAC For The Plant Security..... 2.19-3
Table 3.1-1 ITAAC For The Design of Piping Systems and Components..... 3.1-2
Table 3.3-1a Minimum Inventory of MCR Alarms, Displays, and Controls 3.3-4
Table 3.3-1b Minimum Inventory of RSS Alarms, Displays, and Controls..... 3.3-6
Table 3.3-2 ITAAC For Human Factors Engineering 3.3-7
Table 3.4-1 ITAAC For Radiation Protection 3.4-2
Table 3.6-1 ITAAC For The Design Reliability Assurance Program 3.6-2
Table 3.7-1 ITAAC For Post Accident Monitoring Instrumentation 3.7-4
Table 3.8-1 Electrical and Mechanical Equipment for Environmental Qualification 3.8-2
Table 3.8-2 ITAAC For Environmental and Seismic Qualification of Mechanical and Electrical Equipment 3.8-15
Table 5.1-1 Envelope of ESBWR Standard Plant Site Parameters (1) 5.1-2

List of Illustrations

Figure 1.1.1-1 RPV Water Level Range Definition 1.1-8
Figure 1.2-2. Legend for Tier 1 Electrical System Diagrams 1.2-3
Figure 2.1.1-1. Reactor Pressure Vessel and Internals Key Features Layout 2.1-11
Figure 2.1.1-2. Fuel Bundle, Neutron Sources, Neutron Detectors and Control Rod Functional Arrangement 2.1-12
Figure 2.1.2-1. Safety Relief Valves, Depressurization Valves and Steamline Diagram 2.1-36
Figure 2.1.2-2. NBS Steamlines and Feedwater Lines 2.1-37
Figure 2.1.2-3. Safety Relief Valve Discharge Line Quencher Arrangement 2.1-38
Figure 2.2.1-1. (Deleted) 2.2-14
Figure 2.2.2-1. Control Rod Drive System 2.2-38
Figure 2.2.3-1. (Deleted) 2.2-45
Figure 2.2.4-1. Standby Liquid Control System Simplified Diagram 2.2-71
Figure 2.2.7-1. RPS Functional Arrangement 2.2-88
Figure 2.3.1-1. Process Radiation Monitoring System Diagram 2.3-11
Figure 2.4.1-1. Isolation Condenser System Schematic 2.4-27
Figure 2.4.2-1. Gravity-Driven Cooling System 2.4-56
Figure 2.6.1-1. Reactor Water Cleanup/Shutdown Cooling System 2.6-16
Figure 2.6.2-1. Fuel and Auxiliary Pools Cooling System 2.6-33
Figure 2.11.1-1. TMSS Functional Arrangement 2.11-9
Figure 2.11.1-2. High Pressure Turbine Exhaust Functional Arrangement 2.11-10
Figure 2.11.1-3. Extraction Steam Functional Arrangement 2.11-11
Figure 2.11.5-1. Turbine Gland Seal System Arrangement 2.11-24
Figure 2.12.3-1. Reactor Component Cooling Water System Functional Arrangement 2.12-6
Figure 2.12.5-1. NICWS Functional Arrangement 2.12-10
Figure 2.12.7-1. Plant Service Water System Functional Arrangement 2.12-14
Figure 2.13.1-1 Sh 1. Electric Power Distribution System Functional Arrangement 2.13-14
Figure 2.13.1-1 Sh 2. Electric Power Distribution System Functional Arrangement 2.13-15
Figure 2.13.3-1. Safety-Related 250 VDC System Functional Arrangement 2.13-29
Figure 2.13.3-2 Sh 1. Nonsafety-Related 250 VDC System Functional Arrangement 2.13-30
Figure 2.13.3-2 Sh 2. Nonsafety-Related 125 VDC System Functional Arrangement 2.13-31
Figure 2.13.5-1. Safety-Related UPS System Functional Arrangement 2.13-47
Figure 2.13.5-2 Sh 2 Nonsafety-Related UPS System Functional Arrangement 2.13-49
Figure 2.15.1-1. Containment System 2.15-36
Figure 2.15.3-1. Containment Internal Structures 2.15-42
Figure 2.15.4-1. Passive Containment Cooling System Schematic 2.15-53
Figure 2.15.7-1. Containment Monitoring System Functional Arrangement 2.15-67
Figure 2.16.2-1. CLAVS Functional Arrangement Diagram (Typical Train A/B) 2.16-36
Figure 2.16.2-2. CONAVS Functional Arrangement Diagram (Typical Train A/B) 2.16-37
Figure 2.16.2-3. REPAVS Functional Arrangement Diagram 2.16-38
Figure 2.16.2-4. CRHAVS Functional Arrangement Diagram 2.16-39
Figure 2.16.2-5a. CBGAVS (Set A) Functional Arrangement Diagram 2.16-40
Figure 2.16.2-5b. CBGAVS (Set B) Functional Arrangement Diagram 2.16-41
Figure 2.16.2-6. TBVS Functional Arrangement Diagram 2.16-42
Figure 2.16.2-7. FBGAVS Functional Arrangement Diagram 2.16-43

Figure 2.16.2-8. FBFPVS Functional Arrangement Diagram 2.16-44
Figure 2.16.2-9. EBVS Functional Arrangement Diagram 2.16-45
Figure 2.16.3-1. Fire Protection System 2.16-52
Figure 2.16.5-1. RB Concrete Outline Plan at EL –11500 ..... 2.16-75
Figure 2.16.5-2. RB Concrete Outline Plan at EL –6400 ..... 2.16-76
Figure 2.16.5-3. RB Concrete Outline Plan at EL –1000 ..... 2.16-77
Figure 2.16.5-4. RB Concrete Outline Plan at EL 4650 ..... 2.16-78
Figure 2.16.5-5. RB Concrete Outline Plan at EL 9060 ..... 2.16-79
Figure 2.16.5-6. RB Concrete Outline Plan at EL 13570 ..... 2.16-80
Figure 2.16.5-7. RB Concrete Outline Plan at EL 17500 ..... 2.16-81
Figure 2.16.5-8. RB Concrete Outline Plan at EL 27000 ..... 2.16-82
Figure 2.16.5-9. RB Concrete Outline Plan at EL 34000 ..... 2.16-83
Figure 2.16.5-10. RB Concrete Outline N-S Section 2.16-84
Figure 2.16.5-11. RB Concrete Outline E-W Section 2.16-85
Figure 2.16.6-1. CB Concrete Outline Plan at EL –7400 ..... 2.16-96
Figure 2.16.6-2. CB Concrete Outline Plan at EL –2000 ..... 2.16-97
Figure 2.16.6-3. CB Concrete Outline Plan at EL 4650 ..... 2.16-98
Figure 2.16.6-4. CB Concrete Outline Plan at EL 9060 ..... 2.16-99
Figure 2.16.6-5. CB Concrete Outline E-W Section 2.16-100
Figure 2.16.7-1. FB Concrete Outline Plan at EL –11500 ..... 2.16-111
Figure 2.16.7-2. FB Concrete Outline Plan at EL –6400 ..... 2.16-112
Figure 2.16.7-3. FB Concrete Outline Plan at EL –1000 ..... 2.16-113
Figure 2.16.7-4. FB Concrete Outline Plan at EL 4650 ..... 2.16-114
Figure 2.16.7-5. FB Concrete Outline Plan at EL 22500 ..... 2.16-115
Figure 2.16.7-6. FB Concrete Outline N-S Section 2.16-116
Figure 5.1-1. ESBWR Horizontal SSE Design Ground Spectra at Foundation Level 5.1-8
Figure 5.1-2. ESBWR Vertical SSE Design Ground Response Spectra at Foundation Level 5.1-9

1. INTRODUCTION

This document provides the Tier 1 material of the ESBWR Design Control Document (DCD).

1.1 DEFINITIONS AND GENERAL PROVISIONS

1.1.1 Definitions

The definitions below apply to terms which may be used in the Design Descriptions and associated Inspections, Tests, Analyses, and Acceptance Criteria (ITAAC).

Acceptance Criteria means the performance, physical condition, or analysis results for a structure, system, or component that demonstrates a Design Commitment is met.

Analysis means a calculation, mathematical computation, or engineering or technical evaluation. Engineering or technical evaluations could include, but are not limited to, comparisons with operating experience or design of similar structures, systems, or components.

As-built means the physical properties of the structure, system, or component, following the completion of its installation or construction activities at its final location at the plant site. Determination of physical properties of the as-built structure, system, or component may be based on measurements, inspections, or tests that occur prior to installation provided that subsequent fabrication, handling, installation, and testing do not alter the properties. Many ITAAC require verification of "as-built" structures, systems, or components (SSCs). However, some of these ITAAC will involve measurements and/or testing that can only be conducted at the vendor site due to the configuration of equipment or modules or the nature of the test (e.g., measurements of reactor vessel internals). For these specific items where access to the component for inspection or test is impractical after installation in the plant, the ITAAC closure documentation (e.g., test or inspection record) will be generated at the vendor site and provided to the licensee.

ASME Code Report means a report required by the ASME Code and whose content requirements are stipulated by the ASME Code. Each such ASME Code report is final, and when required is certified in accordance with the Code.

Cold shutdown means a Safe Shutdown with the average reactor coolant temperature ≤ 93.3°C (200°F).

Component as used in Tier 1 for reference to ASME components means that subset of equipment that does not include piping.

Containment means the Reinforced Concrete Containment Vessel (RCCV) and the Passive Containment Cooling System (PCCS) Heat Exchangers, unless explicitly stated otherwise.

Design Commitment means that portion of the Design Description that is verified by ITAAC.

Design Description means that portion of the design that is certified.

Division is the designation applied to a given safety-related system or set of components that enables the establishment and maintenance of physical, electrical, and functional independence from other redundant sets of components.

Dynamic Qualification Documentation (DQD), as used in Tier 1, means the documentation that summarizes the qualification results for seismic qualification of equipment.

Environmental Qualification Documentation (EQD), as used in Tier 1, means the documentation that summarizes the qualification results for environmental qualification of equipment. The EQD includes the following:

- The environmental parameters and the methodology used to qualify the equipment for harsh and mild environments.
- The System Component Evaluation Work sheets which include a summary of environmental conditions and qualified conditions.

Equipment as used in Tier 1 as related to ASME Code and Seismic Category I requirements means both components and piping.

Equipment Identification Number or **Equipment Identifier** as used in Tier 1 means the designation on a Tier 1 figure and is not representative of an actual equipment number or tag number.

Equipment Qualification

For purposes of ITAAC:

Environmental Qualification: Type tests, or type tests and analyses, of the safety-related electrical equipment demonstrate qualification to applicable normal, abnormal and design basis accident conditions without loss of the safety-related function for the time needed during and following the conditions to perform the safety-related function. These harsh environmental conditions, as applicable to the bounding design basis accident(s), are as follows: expected time-dependent temperature and pressure profiles, humidity, chemical effects, radiation, aging, submergence, and their synergistic effects which have a significant effect on equipment performance.

As used in the associated ITAAC, the term "safety-related electrical equipment" constitutes the equipment itself, connected instrumentation and controls, connected electrical components (such as cabling, wiring, and terminations), and the lubricants necessary to support performance of the safety-related functions of the safety-related electrical components identified as being subject to the environmental qualification requirements.

Type tests, or type tests and analyses, of the safety-related mechanical equipment demonstrate qualification to applicable normal, abnormal and design basis accident conditions without loss of the safety-related function for the time needed during and following the conditions to perform the safety-related function considering the applicable harsh environmental conditions. As used in this paragraph, "safety-related mechanical components" refers to mechanical parts, subassemblies or assemblies that are categorized as Quality Group A, B, or C. Mechanical components qualification also may be by type tests, type tests and analyses, or a combination of type tests and analyses of individual parts or subassemblies or of complete assemblies rather than by type testing the individual parts or subassemblies separately. ITAAC address analyses of material data for safety-related mechanical equipment located in a harsh environment.

Safety-related equipment located in a mild environment will be qualified for its environmental conditions through specifications and certifications to the environments; however, for a mild environment, only safety-related digital instrumentation and control equipment will be addressed by ITAAC. Electromagnetic Interference (EMI) and Radio Frequency Interference (RFI) susceptibility and emissions qualification is performed by type testing for the safety-related digital instrumentation and control equipment.

ITAAC are located in Section 3.8. to cover environmental qualification for digital instrumentation and control equipment (including digital components in the safety-related electrical distribution system) located in a mild environment. Environmental qualification of safety-related electrical (including I&C equipment) and mechanical equipment in a harsh environment is covered in Section 3.8 ITAAC. Equipment inside containment that supports RTNSS functions is covered in Section 3.8 ITAAC. The scope of equipment located in a harsh environment subject to environmental qualification is identified in a table in Section 3.8. The scope of digital I&C equipment located in a mild environment subject to environmental qualification is determined through the completion of Design Acceptance Criteria ITAAC in Section 3.8.

Seismic Qualification: Type tests, analyses, or a combination of type tests and analyses of the Seismic Category I mechanical and electrical equipment (including connected instrumentation and controls) may be used to demonstrate that the as-built equipment, including associated anchorage, is qualified to withstand design basis dynamic loads without loss of its safety function. Seismic qualification for digital instrumentation and controls equipment is addressed in Section 3.8 ITAAC, with the determination of the scope of equipment being designated as Design Acceptance Criteria. Seismic qualification for mechanical and electrical equipment is addressed in system ITAAC throughout Tier 1. Seismic qualification results are documented in DQDs for both system-based ITAAC and the Section 3.8 ITAAC for digital instrumentation and controls equipment. System-based ITAAC address performance of inspections and analyses to verify equipment seismic qualification is bounded by the testing or analyzed conditions. The "inspections and analyses" include verification that the associated DQD exists and concludes that the as-built equipment is seismically qualified.

Exists, when used in Acceptance Criteria, means that the item is present and meets the design description.

Functional Arrangement/Physical Arrangement (for a Building) means the arrangement of the building features (e.g., floors, ceilings, walls, basemat and doorways) and of the structures, systems, or components within, as specified in the building Design Descriptions.

Functional Arrangement (for a System) means the physical arrangement of systems and components to provide the service for which the system in intended, and which is described in the system Design Description.

Hot shutdown means a Safe Shutdown with the average reactor coolant temperature > 215.6°C (420°F).

Inspect or **Inspection** means visual observations, physical examinations, or review of records based on visual observation or physical examination that compare the structure, system, or component condition to one or more Design Commitments. Examples include, but are not limited to,

walk-downs, configuration checks, measurements of dimensions, and non-destructive examinations. Inspections also may include review of design and construction documents including drawings, calculations, analyses, test procedures and results, certificates of compliance, purchase records, and other documents that may verify that the acceptance criteria of a particular ITAAC are met.

Inspect for Retrievability of a display means to visually observe that the specified information appears on a monitor when summoned by the operator.

Operate means the actuation, control, running, or shutting down (*e.g.,* closing, turning off) of equipment.

Reactor Pressure Vessel (RPV) Water Level means the various levels used as reference points for instrumentation ranges. Figure 1.1.1-1 shows the relative location of the defined water levels and the overlap in the level measurement ranges.

Report means, as used in the Acceptance Criteria, a document created by or for the licensee that verifies that the acceptance criteria of the subject ITAAC have been met and references the supporting documentation. Reports typically include but are not limited to: results of walkdowns, results of visual inspections, field measurements, and reviews of design and construction documents. The Functional Arrangement verification report, for ASME Code Section III components or systems, may be or may include an ASME Code report.

Safe Shutdown (generic definition) is a shutdown with:

(1) The reactivity of the reactor kept to a margin below criticality consistent with Technical Specifications;

(2) The core decay heat being removed at a controlled rate sufficient to prevent core or reactor coolant system thermal design limits from being exceeded;

(3) Components and systems necessary to maintain these conditions operating within their design limits; and

(4) Components and systems, necessary to keep doses within prescribed limits, operating properly.

Safe Shutdown for Station Blackout means bringing the plant to those shutdown conditions specified in plant Technical Specifications as Hot Shutdown or Stable Shutdown.

Stable Shutdown means a Safe Shutdown with the average reactor coolant temperature ≤ 215.6°C (420°F) and > 93ºC (200ºF) (see "safe stable condition" in SECY-94-084 and stable shutdown in ESBWR Generic Technical Specifications).

Test or **Testing** means the actuation, operation, or establishment of specified conditions, to evaluate the performance or integrity of as-built structures, systems, or components, unless explicitly stated otherwise.

Train means a redundant, identical mechanical function within a system. For nonsafety-related systems, redundant trains may share passive components (e.g., piping, supports, manual shutoff valves).

Type Test means a test on one or more sample components of the same type and manufacturer to qualify other components of that same type and manufacturer. A type test is not necessarily a test of the as-built structures, systems, or components.

Verification of the Functional Arrangement of a system, as used in an ITAAC, means verifying that the system is constructed as depicted in the Tier 1 Design Description and figures, including equipment and instrument locations, if applicable.

1.1.2 General Provisions

The following general provisions are applicable to the design descriptions and associated ITAAC.

1.1.2.1 Treatment of Individual Items

The absence of any discussion or depiction of an item in the Design Description or accompanying figures shall not be construed as prohibiting a licensee from utilizing such an item, unless it would prevent an item from performing its safety functions, or impairing the performance of those safety functions, as discussed or depicted in the Design Description or accompanying figures.

If an inspection, test, or analyses requirement does not specify the temperature or other conditions under which a test must be run, then the test conditions are not constrained.

When the term "operate," "operates" or "operation" is used with respect to an item discussed in the Acceptance Criteria, it refers to the actuation, control, running or shutting down of the item. When the term "exist," "exists" or "existence" is used with respect to an item discussed in the Acceptance Criteria, it means that the item is present and meets the Design Description.

1.1.2.2 Implementation of ITAAC

Inspections, Tests, Analyses, and Acceptance Criteria (ITAAC) are provided in tables with the following three-column format:

Design Commitment	Inspections, Tests, Analyses	Acceptance Criteria

Each Design Commitment in the left-hand column of the ITAAC tables has an associated requirement for Inspections, Tests or Analyses (ITA) specified in the middle column of the tables. The identification of a separate ITA entry for each Design Commitment shall not be construed to require that separate inspections, tests, or analyses must be performed for each Design Commitment. Instead, the activities associated with more than one ITA entry may be combined, and a single inspection, test, or analysis may be sufficient to implement more than one ITA entry.

An ITA may be performed by the licensee of the plant or by its authorized vendors, contractors, or consultants. Furthermore, an ITA may be performed by more than a single individual or group, may be implemented through discrete activities separated by time, and may be performed at any time prior to fuel load (including before issuance of the Combined License for those ITAAC that do not require as-built equipment). Additionally, ITA may be performed as part of the activities that are required to be performed under 10 CFR 50 (including, for example, the Quality Assurance (QA) program required under Appendix B to Part 50). Therefore, an ITA need not be performed as a separate or discrete activity.

For the Acceptance Criteria, appropriate documentation may be a single document or a collection of documents that show that the stated Acceptance Criteria are met. Examples of appropriate documentation include design reports, test reports, inspection reports, analysis reports, evaluation reports, design and manufacturing procedures, certified data sheets, commercial dedication procedures and records, quality assurance records, calculation notes, and equipment qualification data packages.

An entry in the ITA column of the ITAAC tables include the words "Inspection will be performed for the existence of a report verifying…" When these words are used it indicates that the ITA is tests, type tests, analyses, or a combination of tests, type tests, and analyses and a report will be produced documenting the results. This report will be available for inspection.

For those nonsystem-based ITAAC, which address piping and equipment qualification, the ITA and Acceptance Criteria may be satisfied on a system-by-system basis so as not to delay completion of ITAAC for a particular system. In this manner, a system may be turned over for operation following verification of the information needed to satisfy the nonsystem-based ITAAC. Documentation of completion of the ITAAC for a particular system will be retained in a manner that will allow verification of completion of the ITAAC for the nonsystem-based ITAAC. Notification to the NRC of completion of the nonsystem-based ITAAC may be on a system basis throughout construction and should be discussed with the NRC whether notification should be provided. Notification to the NRC will be made upon final completion of the nonsystem-based ITAAC for purposes of ensuring that the Acceptance Criteria have been met.

The Acceptance Criteria are generally stated in terms of a value with and acceptable range, or with a values that is either a minimum or maximum. For these ITAAC, the acceptance criteria for performing the ITAAC will be as stated in the Acceptance Criteria. In some cases, the Acceptance Criteria are stated in terms of nominal values without an acceptable range. For these ITAAC, the acceptable range will be determined at the time of performing the ITAAC.

1.1.2.3 Discussion of Matters Related to Operations

In some cases, the Design Descriptions in this document refer to matters that relate to operation, such as normal valve or breaker alignment during normal operation modes. Such discussions are provided solely to place the Design Description provisions in context (*e.g.,* to explain automatic features for opening or closing valves or breakers upon off-normal conditions). Such discussions shall not be construed as requiring operators during operation to take any particular action (*e.g.,* to maintain valves or breakers in a particular position during normal operation).

1.1.2.4 Interpretation of Figures

In many but not all cases, the Design Descriptions in Section 2 include one or more figures, which may represent a functional diagram, general structural representation, or another general illustration. For instrumentation and control systems, the figures also represent aspects of the relevant logic of the system or part of the system. Unless specified explicitly, these figures are not indicative of the scale, location, dimensions, shape, or spatial relationships of as-built structures, systems, or components. In particular, the as-built attributes of structures, systems, or components may vary from the attributes depicted on these figures, provided that those safety functions discussed in the Design Description pertaining to the figure are not adversely affected.

1.1.2.5 Rated Reactor Core Thermal Power

The initial rated reactor core thermal power for the standard ESBWR is 4500 megawatts thermal (MWt).

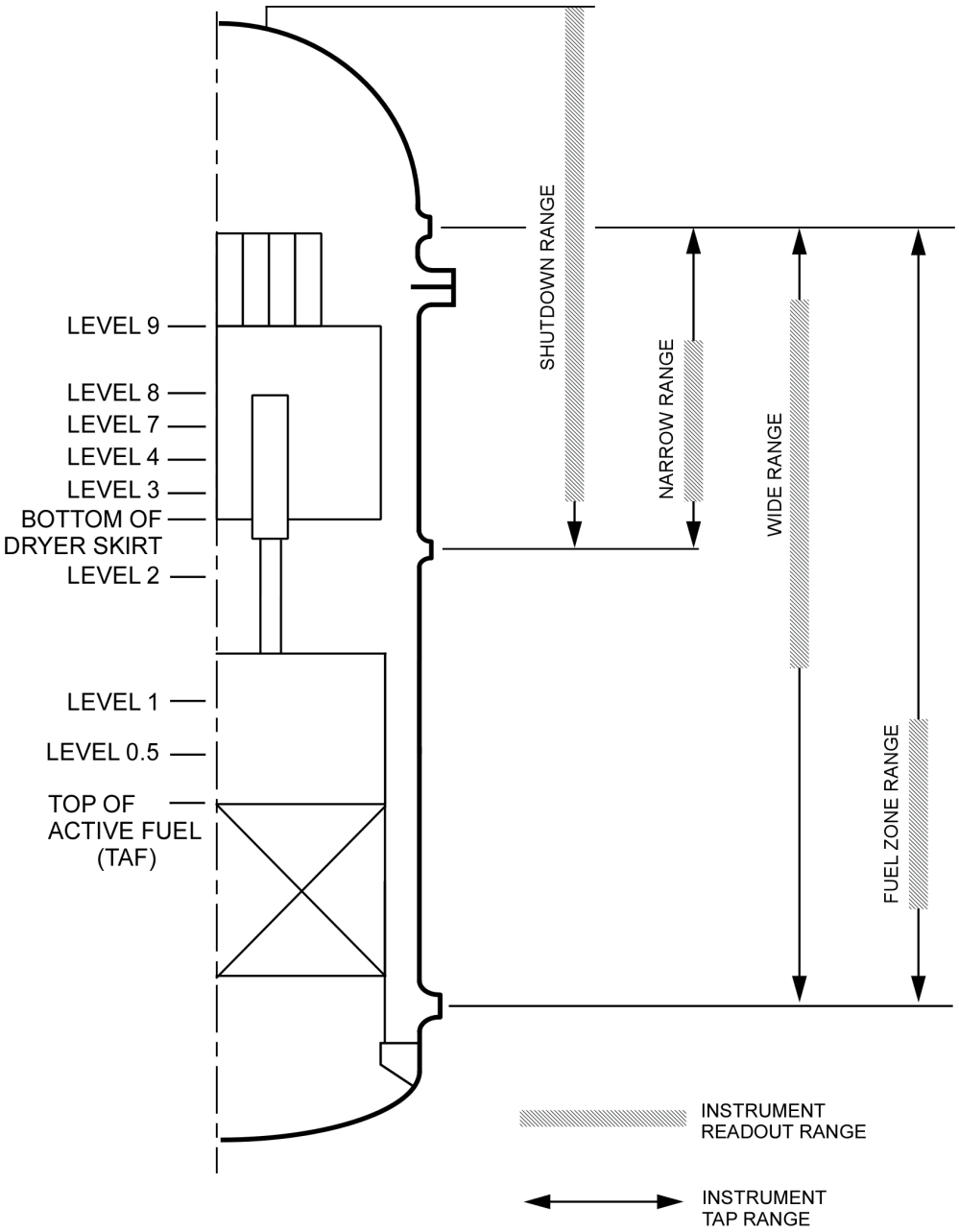

Figure 1.1.1-1 RPV Water Level Range Definition

1.2 FIGURE LEGEND

Certain Tier 1 sections include figures described in the design description. Figure legends are provided in Figures 1.2-1 and 1.2-2 for certain symbols used in system functional arrangement diagrams. The figure legend is provided for information and is not part of the Tier 1 Material. Many of the Tier 1 figures identify specific equipment and may include figure specific legends. Electrical and building drawings contain figure-specific legends and equipment nomenclature. Other figures may be labeled as necessary to explain the content of the figure.

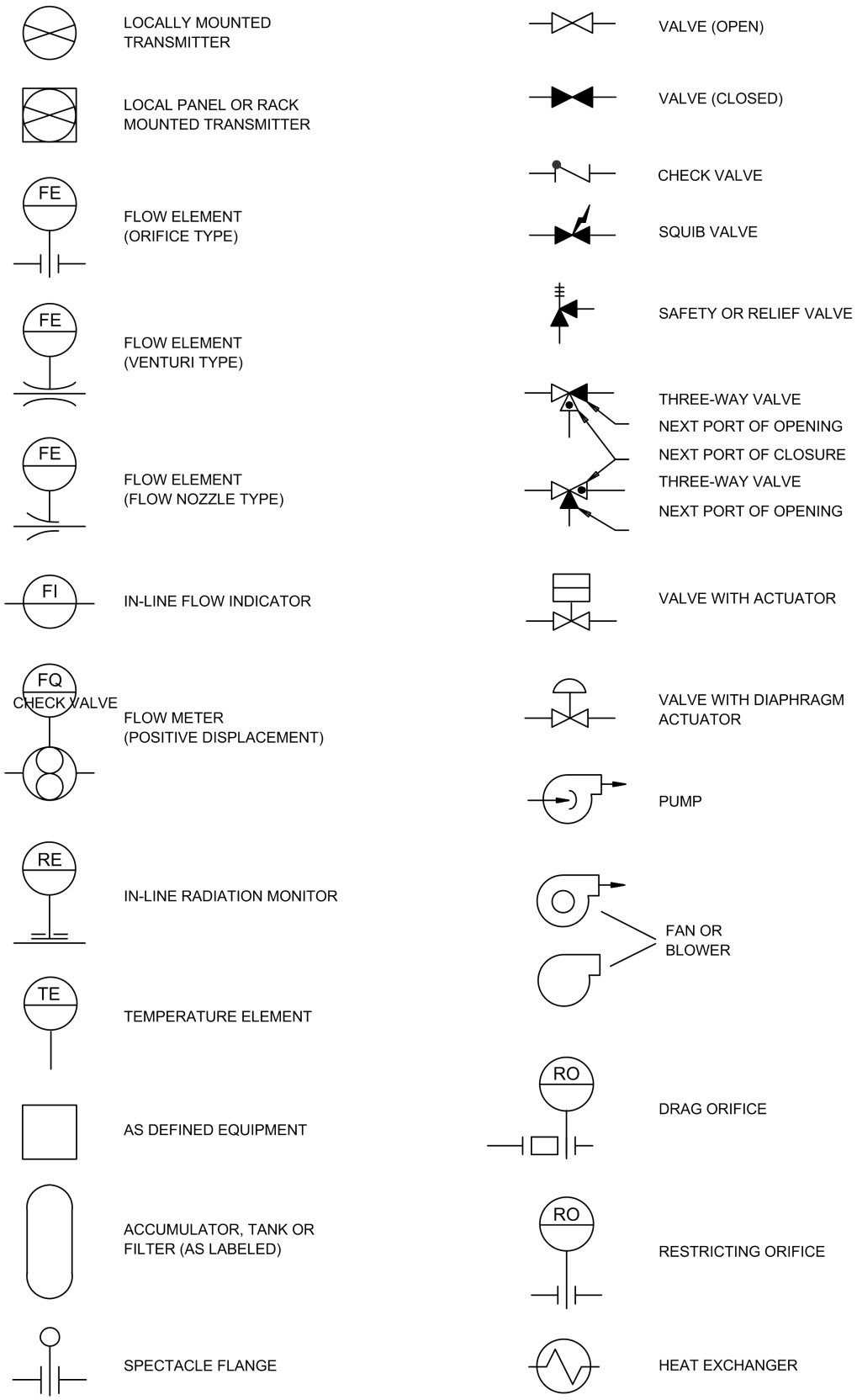

Figure 1.2-1. Legend for Tier 1 System Diagrams

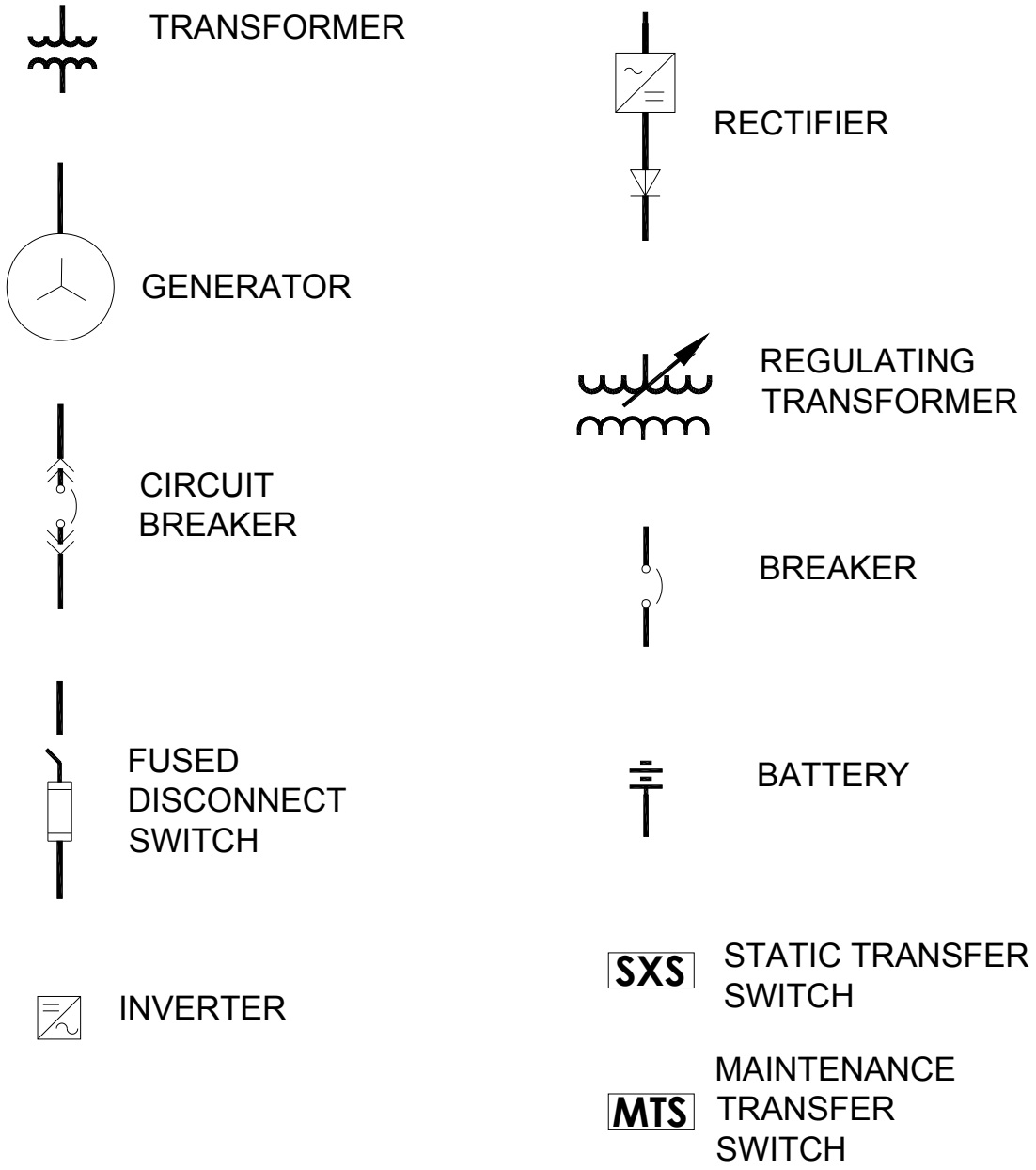

Figure 1.2-2. Legend for Tier 1 Electrical System Diagrams

1.3 TABLE LEGEND

A dash (-) in a table column means “not applicable”.

1.4 DESIGN ACCEPTANCE CRITERIA

Design Acceptance Criteria are a special type of ITAAC that set forth the processes and acceptance criteria for completing portions of design. These are designated as "{{Design Acceptance Criteria}}" in the two right columns of the ITAAC tables where appropriate.

2. DESIGN DESCRIPTIONS AND ITAAC

This section provides the certified design material for each of the ESBWR systems that is either fully or partially within the scope of the Certified Design.

2.1 NUCLEAR STEAM SUPPLY

The following subsections describe the major Nuclear Steam Supply Systems (NSSS) components of the Reactor Pressure Vessel (RPV) and the Nuclear Boiler System. This section also describes the natural circulation process for the ESBWR.

2.1.1 Reactor Pressure Vessel and Internals

Design Description

The RPV and Internals generate heat and boil water to steam in a direct cycle. The functional arrangement of the RPV and Internals includes the reactor core and reactor internals (see Figure 2.1.1-1). The chimney provides an additional elevation head (or driving head) necessary to sustain natural circulation flow through the RPV. The chimney also forms an annulus separating the subcooled recirculation flow returning downward from the steam separators and feedwater from the upward steam-water mixture flow exiting the core. The steam is separated from the steam-water mixture by passing the mixture sequentially through an array of steam separators attached to a removable cover on the top of the chimney assembly, and through the steam dryer, resulting in outlet dry steam. The water mixes with the feedwater as it comes into the RPV through the feedwater nozzle. RPV internals consist of core support structures and other equipment.

The RPV is located in the containment. Internal component locations are shown on Figure 2.1.1-1.

The reactor core contains a matrix of fuel rods assembled into fuel assemblies using structural elements. Control rods in the reactor perform the functions of power distribution shaping, reactivity control, and scram reactivity insertion for safety shutdown response. The core is designed for 1132 fuel bundles and 269 control rods arranged as shown in Figure 2.1.1-2.

(1) The functional arrangement of the RPV and Internals is as described in the Design Description of this Subsection 2.1.1, Table 2.1.1-1 and Figure 2.1.1-1.

(2) The key dimensions (and acceptable variations) of the as-built RPV are as described in Table 2.1.1-2.

(3) a1. The RPV and its components identified in Table 2.1.1-1 (shroud, shroud support, top guide, core plate, control rod guide tubes and fuel supports) as ASME Code Section III are designed in accordance with ASME Code Section III requirements.

a2. The RPV and its components identified in Table 2.1.1-1 (shroud, shroud support, top guide, core plate, control rod guide tubes and fuel supports) as ASME Code Section III shall be reconciled with the design requirements.

a3. The RPV and its components identified in Table 2.1.1-1 (shroud, shroud support, top guide, core plate, control rod guide tubes and fuel supports) as ASME Code Section III

are fabricated, installed, and inspected in accordance with ASME Code Section III requirements.

(4) Pressure boundary welds in the RPV meet ASME Code Section III non-destructive examination requirements.

(5) The RPV retains its pressure boundary integrity at its design pressure.

(6) The equipment identified in Table 2.1.1-1 as Seismic Category I can withstand Seismic Category I loads without loss of safety function.

(7) RPV surveillance specimens are provided from the forging material of the beltline region and the weld and heat affected zone of a weld typical of those adjacent to the beltline region. Brackets welded to the vessel cladding at the location of the calculated peak fluence are provided to hold the removable specimen holders and a neutron dosimeter in place.

(8) a. The RPV internal structures listed in Table 2.1.1-1 (chimney and partitions, chimney head and steam separators assembly, and steam dryer assembly) must meet the limited provisions of ASME Code Section III regarding certification that these components maintain structural integrity so as not to adversely affect RPV core support structure.

b. The RPV internal structures listed in Table 2.1.1-1 (chimney and partitions, chimney head and steam separators assembly, and steam dryer assembly) meet the requirements of ASME B&PV Code, Subsection NG-3000, except for the weld quality and fatigue factors for secondary structural non-load bearing welds.

(9) The initial fuel to be loaded into the core will withstand flow-induced vibration and maintain fuel cladding integrity during operation.

(10) The fuel bundles and control rods intended for initial core load have been fabricated in accordance with the approved fuel and control rod design.

(11) The reactor internals arrangement conforms to the fuel bundle, instrumentation, neutron sources, and control rod locations shown on Figure 2.1.1-2.

(12) The number and locations of pressure sensors installed on the steam dryer for startup testing ensure accurate pressure predictions at critical locations.

(13) The number and locations of strain gages and accelerometers installed on the steam dryer for startup testing are capable of monitoring the most highly stressed components, considering accessibility and avoiding discontinuities in the components.

(14) The number and locations of accelerometers installed on the steam dryer for startup testing are capable of identifying potential rocking and of measuring the accelerations resulting from support and vessel movements.

Inspections, Tests, Analyses, and Acceptance Criteria

Table 2.1.1-3 provides a definition of the inspections, tests, and analyses, together with associated acceptance criteria for the Reactor Pressure Vessel and Internals.

Table 2.1.1-1

Reactor Pressure Vessel and Internals Mechanical Equipment

Equipment Name	ASME Code Section III	Seismic Cat. I	RCPB(2) Component	Containment Isolation Valve	Remotely Operated Valve	Loss of Motive Power Position	MCR(3) Alarms
RPV	Yes	Yes	Yes	-	-	-	-
Core support structures (shroud, shroud support, top guide, core plate, control rod guide tubes and fuel supports) which have a support function	Yes	Yes	-	-	-	-	-
Chimney and partitions	Yes(1)(4)	-	-	-	-	-	-
Chimney head and steam separators assembly	Yes(1)(4)	-	-	-	-	-	-
Steam dryer assembly	Yes(1)(4)	-	-	-	-	-	-

(1) The chimney and partitions, the chimney head and steam separators assembly, and the steam dryer assembly are subject only to the ASME III certification requirements specified in ASME Code Section III, Subsection NG-1122 (c).

(2) RCPB = Reactor Coolant Pressure Boundary

(3) MCR = Main Control Room

(4) The chimney and partitions, the chimney head and steam separators assembly, and the steam dryer assembly are not ASME B&PV Code components, but their design complies with the requirements of ASME B&PV Code, Subsection NG-3000 except for the weld quality and fatigue factors for secondary structural non-load bearing welds.

Table 2.1.1-2

Key Dimensions of RPV Components and Acceptable Variations

Description	Dimension/ Elevation (Figure 2.1.1-1)	Nominal Value mm (in)	Acceptable Variation mm (in)
RPV bottom head inside invert elevation	A	0	Reference elevation zero
Bottom of active fuel location from elevation zero[1]	B	4405 (173.4)	±16 (0.63)
Top of active fuel location from elevation zero[1]	C	7453 (293.4)	±16 (0.63)
RPV top head inside invert elevation	D	27560 (1085)	±100 (3.94)
RPV inside diameter (inside cladding)	E	7112 (280.0)	±51 (2.01)
RPV wall thickness in beltline (including cladding)	F	182 (7.17)	177.2 min (6.976 min)

[1] Dimension is verified by calculations based on as-built interfacing components.

Table 2.1.1-3

ITAAC For The Reactor Pressure Vessel and Internals

Design Commitment	Inspections, Tests, Analyses	Acceptance Criteria
1. The functional arrangement of the RPV and Internals is as described in the Design Description of Subsection 2.1.1, Table 2.1.1-1 and Figure 2.1.1-1.	Inspections of the as-built RPV and Internals will be conducted.	The RPV and Internals and core arrangement conforms to the functional arrangement described in the Design Description of this Subsection 2.1.1, Table 2.1.1-1 and Figure 2.1.1-1.
2. The key dimensions (and acceptable variations) of the as-built RPV are as described in Table 2.1.1-2.	Inspection of the as-built RPV key dimensions (and acceptable variations thereof) will be conducted.	The RPV conforms to the key dimensions (and acceptable variations) described in Table 2.1.1-2.
3a1 The RPV and its components identified in Table 2.1.1-1 (shroud, shroud support, top guide, core plate, control rod guide tubes and fuel supports) as ASME Code Section III are designed in accordance with ASME Code Section III requirements.	Inspection of ASME Code Design Reports (NCA-3550) and required documents will be conducted.	ASME Code Design Report(s) (NCA-3550) (certified, when required by ASME Code) exist and conclude that the design of the RPV and its components identified in Table 2.1.1-1 (shroud, shroud support, top guide, core plate, control rod guide tubes and fuel supports) as ASME Code Section III complies with the requirements of the ASME Code, Section III, including those stresses applicable to loads related to fatigue (including environmental effects), thermal expansion, seismic, and combined.

Table 2.1.1-3

ITAAC For The Reactor Pressure Vessel and Internals

Design Commitment	Inspections, Tests, Analyses	Acceptance Criteria
3a2. The RPV and its components identified in Table 2.1.1-1 (shroud, shroud support, top guide, core plate, control rod guide tubes and fuel supports) as ASME Code Section III shall be reconciled with the design requirements.	A reconciliation analysis of the components using as-designed and as-built information and ASME Code Design Reports (NCA-3550) will be performed.	ASME Code Design Report(s) (certified, when required by ASME Code) exist and conclude that design reconciliation has been completed in accordance with the ASME Code for as-built reconciliation of the RPV and its components identified in Table 2.1.1-1 (shroud, shroud support, top guide, core plate, control rod guide tubes and fuel supports) as ASME Code Section III. The report documents the results of the reconciliation analysis.
3a3. The RPV and its components identified in Table 2.1.1-1 (shroud, shroud support, top guide, core plate, control rod guide tubes and fuel supports) as ASME Code Section III are fabricated, installed, and inspected in accordance with ASME Code Section III requirements.	Inspection of the RPV and its components identified in Table 2.1-1 as ASME Code Section III will be conducted.	ASME Code Data Report(s) (including N-1/N-1A Data reports, where applicable) (certified, when required by ASME Code) and inspection reports exist and conclude that the RPV and its components identified in Table 2.1.1-1 (shroud, shroud support, top guide, core plate, control rod guide tubes and fuel supports) as ASME Code Section III are fabricated, installed, and inspected in accordance with ASME Code Section III requirements.

Table 2.1.1-3

ITAAC For The Reactor Pressure Vessel and Internals

Design Commitment	Inspections, Tests, Analyses	Acceptance Criteria
4. Pressure boundary welds in the RPV meet ASME Code Section III non-destructive examination requirements.	Inspection of as-built pressure boundary welds in the RPV will be performed in accordance with the ASME Code Section III.	ASME Code Report(s) exist and conclude that the ASME Code Section III requirements are met for non-destructive examination of pressure boundary welds in the RPV.
5. The RPV retains its pressure boundary integrity at its design pressure.	A hydrostatic test will be conducted on the RPV as it is required to be hydrostatically tested by the ASME Code.	ASME Code Report(s) exist and conclude that the results of the hydrostatic test of the RPV comply with the requirements of the ASME Code Section III.
6. The equipment identified in Table 2.1.1-1 as Seismic Category I can withstand Seismic Category I loads without loss of safety function.	i. Inspection will be performed to verify that the Seismic Category I equipment identified in Table 2.1.1-1 is located in a Seismic Category I structure. ii. Type tests, analyses, or a combination of type tests and analyses of equipment identified in Table 2.1.1-1 as Seismic Category I will be performed using analytical assumptions, or will be performed under conditions which bound the Seismic Category I design requirements.	i. The equipment identified in Table 2.1.1-1 as Seismic Category I is located in a Seismic Category I structure. ii. The equipment identified in Table 2.1.1-1 as Seismic Category I can withstand Seismic Category I loads without loss of safety function.

Table 2.1.1-3

ITAAC For The Reactor Pressure Vessel and Internals

Design Commitment	Inspections, Tests, Analyses	Acceptance Criteria
	iii. Inspection and analyses will be performed to verify that the as-built equipment identified in Table 2.1.1-1 as Seismic Category I, including anchorage, is bounded by the tested or analyzed conditions.	iii. The as-built equipment, identified in Table 2.1.1-1 as Seismic Category I, including anchorage, can withstand Seismic Category I loads without loss of safety function.
7. RPV surveillance specimens are provided from the forging material of the beltline region and the weld and heat affected zone of a weld typical of those adjacent to the beltline region. Brackets welded to the vessel cladding at the location of the calculated peak fluence are provided to hold the removable specimen holders and a neutron dosimeter in place.	Inspections of the as-built RPV and Internals will be conducted for implementation of the RPV surveillance specimens, neutron dosimeter, and brackets. An analysis is performed to determine the location of the peak fluence.	The RPV surveillance specimens and neutron dosimeters are provided and brackets are installed at the location(s) of calculated peak fluence determined by an analysis of the as-built configuration.
8a. The RPV internal structures listed in Table 2.1.1-1 (chimney and partitions, chimney head and steam separators assembly, and steam dryer assembly) must meet the limited provisions of ASME Code Section III regarding certification that these components maintain structural integrity so as not to adversely affect RPV core support structure.	Inspections will be conducted of the as-built internal structures as documented in the ASME Code design reports.	The RPV internal structures listed in Table 2.1.1-1 (chimney and partitions, chimney head and steam separators assembly, and steam dryer assembly) meet the limited provisions of ASME Code Section III, NG-1122 (c), regarding certification that these components maintain structural integrity so as not to adversely affect RPV core support structure.

Table 2.1.1-3

ITAAC For The Reactor Pressure Vessel and Internals

Design Commitment	Inspections, Tests, Analyses	Acceptance Criteria
8b. The RPV internal structures listed in Table 2.1.1-1 (chimney and partitions, chimney head and steam separators assembly, and steam dryer assembly) meet the requirements of ASME B&PV Code, Subsection NG-3000, except for the weld quality and fatigue factors for secondary structural non-load bearing welds.	Inspections will be conducted of the as-built internal structures as documented in the ASME Code design reports.	The RPV internal structures listed in Table 2.1.1-1 (chimney and partitions, chimney head and steam separators assembly, and steam dryer assembly) meet the requirements of ASME B&PV Code, Subsection NG-3000, except for the weld quality and fatigue factors for secondary structural non-load bearing welds.
9. The initial fuel to be loaded into the core will withstand flow-induced vibration and maintain fuel cladding integrity during operation.	Flow-Induced Vibration (FIV) testing will be performed on the fuel bundle design that will be loaded into the ESBWR initial core and on the reference fuel design in reactor use during the time of the tests. Bundle and rod responses at various elevations between the ESBWR design and the fuel design with the most similar design features will be compared.	The initial fuel to be loaded into the core will withstand flow-induced vibration and maintain fuel cladding integrity during operation.
10. The fuel bundles and control rods intended for initial core load have been fabricated in accordance with the approved fuel and control rod design.	An inspection of the fuel bundles and control rods will be performed.	The fuel bundles and control rods intended for the initial core load have been inspected upon receipt to verify that they have been fabricated in accordance with the approved fuel and control rod design.

Table 2.1.1-3

ITAAC For The Reactor Pressure Vessel and Internals

Design Commitment	Inspections, Tests, Analyses	Acceptance Criteria
11. The reactor internals arrangement conforms to the fuel bundle, instrumentation, neutron sources, and control rod locations shown on Figure 2.1.1-2.	An inspection of the as-built system will be performed.	The as-built reactor system fuel bundle, control rod, instrumentation, and neutron source locations conform to the locations shown on Figure 2.1.1-2.
12. The number and locations of pressure sensors installed on the steam dryer for startup testing ensure accurate pressure predictions at critical locations.	An analysis of the number and locations of pressure sensors installed on the steam dryer for startup testing will be performed.	The number and locations of pressure sensors installed on the steam dryer for startup testing ensure accurate pressure predictions at critical locations.
13. The number and locations of strain gages and accelerometers installed on the steam dryer for startup testing are capable of monitoring the most highly stressed components, considering accessibility and avoiding discontinuities in the components.	An analysis of the number and locations of strain gages and accelerometers installed on the steam dryer for startup testing will be performed.	The number and locations of strain gages and accelerometers installed on the steam dryer for startup testing are capable of monitoring the most highly stressed components, considering accessibility and avoiding discontinuities in the components.
14. The number and locations of accelerometers installed on the steam dryer for startup testing are capable of identifying potential rocking and of measuring the accelerations resulting from support and vessel movements.	An analysis of the number and locations of accelerometers installed on the steam dryer for startup testing will be performed.	The number and locations of accelerometers installed on the steam dryer for startup testing are capable of identifying potential rocking of and measuring the accelerations resulting from support and vessel movements.

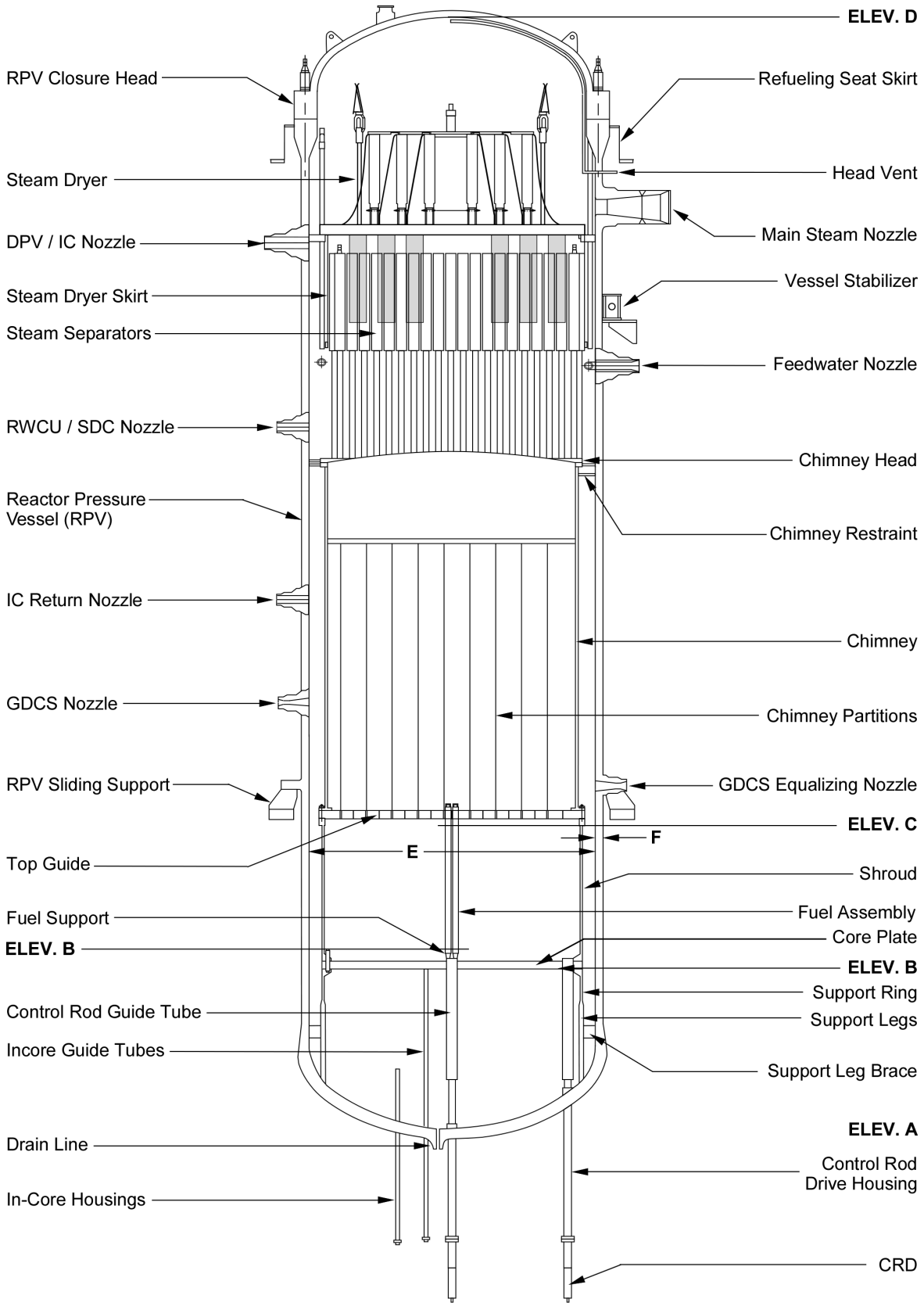

Figure 2.1.1-1. Reactor Pressure Vessel and Internals Key Features Layout

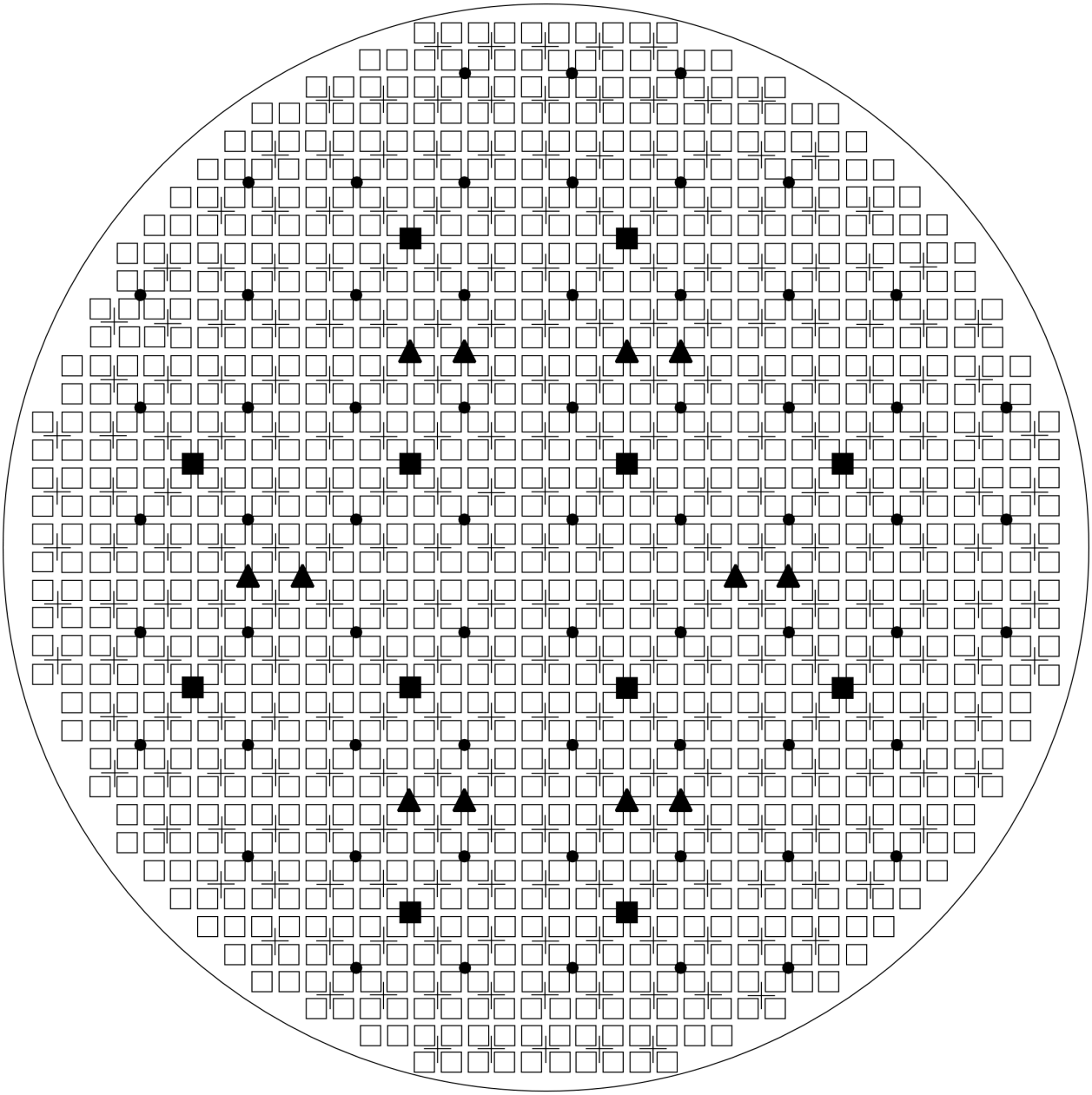

Fuel Bundle Locations	1132	Control Rod Locations	269
SRNM Channels	12	LPRM	64
Neutron Source and Spare Source Locations	12		

Figure 2.1.1-2. Fuel Bundle, Neutron Sources, Neutron Detectors and Control Rod Functional Arrangement

2.1.2 Nuclear Boiler System

Design Description

The Nuclear Boiler System (NBS) generates steam from feedwater and transports steam from the RPV to the main turbine.

The combined steamline volume from the RPV to the main steam turbine stop valves and steam bypass valves is sufficient to validate the assumptions in Anticipated analyses (see Table 2.11.1-1, Item 8).

The environmental qualification of the NBS components is addressed in Section 3.8; and the environmental and seismic qualification of digital instrumentation and controls equipment is addressed in Section 3.8.

The containment isolation requirements for the NBS are addressed in Subsection 2.15.1.

NBS software is developed in accordance with the software development program described in Section 3.2.

NBS alarms, displays, controls, and status indications in the MCR are addressed by Section 3.3.

Conformance with IEEE Standard 603 requirements by the safety-related control system, structures, systems, or components is addressed in Subsection 2.2.15.

(1) The functional arrangement of the NBS is as described in the Design Description of this Subsection 2.1.2, Tables 2.1.2-1 and 2.1.2-2, and as shown on Figures 2.1.2-1, 2.1.2-2, and 2.1.2-3.

(2) a1. The components identified in Table 2.1.2-1 as ASME Code Section III are designed in accordance with ASME Code Section III requirements.

a2. The components identified in Table 2.1.2-1 as ASME Code Section III shall be reconciled with the design requirements.

a3. The components identified in Table 2.1.2-1 as ASME Code Section III are fabricated, installed, and inspected in accordance with ASME Code Section III requirements.

b1. The piping identified in Table 2.1.2-1 as ASME Code Section III is designed in accordance with ASME Code Section III requirements.

b2. The as-built piping identified in Table 2.1.2-1 as ASME Code Section III shall be reconciled with the piping design requirements.

b3. The piping identified in Table 2.1.2-1 as ASME Code Section III is fabricated, installed, and inspected in accordance with ASME Code Section III requirements.

(3) a. Pressure boundary welds in components identified in Table 2.1.2-1 as ASME Code Section III meet ASME Code Section III non-destructive examination requirements.

b. Pressure boundary welds in piping identified in Table 2.1.2-1 as ASME Code Section III meet ASME Code Section III non-destructive examination requirements.

(4) a. The components identified in Table 2.1.2-1 as ASME Code Section III retain their pressure boundary integrity at their design pressure.

b. The piping identified in Table 2.1.2-1 as ASME Code Section III retains its pressure boundary integrity at its design pressure.

(5) The equipment identified in Table 2.1.2-1 and Table 2.1.2-2 as Seismic Category I can withstand Seismic Category I loads without loss of safety function.

(6) a. (Deleted)

b. (Deleted)

(7) a. Each NBS mechanical train located outside the containment is physically separated from the other train(s) so as not to preclude accomplishment of the intended safety-related function.

b. Each NBS mechanical train located inside the containment is physically separated from the other train(s) so as not to preclude accomplishment of the intended safety-related function.

(8) a. The MSIVs close upon command.

b. The Feedwater Isolation Valves (FWIVs) close upon command.

(9) (Deleted)

(10) MSIVs and FWIVs fail closed upon loss of electrical power to the actuating solenoid.

(11) Check valves listed in Table 2.1.2-1 open and close under system pressure, fluid flow, and temperature conditions.

(12) The throat diameter of each Main Steamline (MSL) flow restrictor is sized for design choke flow requirements.

(13) Each MSL flow restrictor has taps for two instrument connections to be used for monitoring the flow through its associated MSL.

(14) (Deleted)

(15) a. The MSIVs are capable of fast closing under design differential pressure, fluid flow, and temperature conditions.

b. The FWIVs are capable of fast closing under design differential pressure, fluid flow and temperature conditions.

(16) a. When all four inboard or outboard MSIVs are stroked from a full-open to full-closed position by their actuators, the combined leakage through the MSIVs for all four MSLs will be less than or equal to the design bases assumption value.

b. When all four FWIVs are stroked from full-open to full-closed position by their actuators, the combined liquid inflow leakage through the FWIVs for both feedwater lines will be less than or equal to the design bases assumption value.

c. When all four FWIVs are stroked from full-open to full-closed position by their actuators, the combined gas outflow leakage through the FWIVs for both feedwater lines will be less than or equal to the design bases assumption value.

(17) The opening pressure for the Safety Relief Valves (SRVs) setpoint in mechanical lift mode validates the overpressure protection analysis by lifting at its nominal setpoint pressure.

(18) The opening time for the SRVs in the overpressure operation of self-actuated or mechanical lift mode, which is measured from when the pressure exceeds the valve set pressure to when the valve is fully open, shall be less than or equal to the design opening time.

(19) The steam discharge capacity of each SRV validates (i.e., is greater than or equal to that used in) the overpressure protection analysis.

(20) The opening pressure for the Safety Valves (SVs) validates (i.e., is less than or equal to that used in) the overpressure protection analysis.

(21) The opening time for the SVs, measured from when the pressure exceeds the valve set pressure to when the valve is fully open, shall be less than or equal to the design opening time.

(22) The steam discharge capacity of each SV validates (i.e., is greater than or equal to that used in) the overpressure protection analysis.

(23) The relief-mode actuator (and safety-related appurtenances) can open each SRV with the drywell (DW) pressure at design pressure.

(24) The booster assembly opens each Depressurization Valve (DPV) in less than or equal to the design opening time (opening time to full rated capacity).

(25) Each DPV minimum flow capacity is sufficient to support rapid depressurization of the RPV (i.e., has a flow capacity that is greater than or equal to the design flow capacity under design basis conditions).

(26) (Deleted)

(27) (Deleted)

(28) Vacuum breakers are provided on SRV discharge lines to reduce the post-discharge reflood height of water in the discharge lines.

(29) The SRV discharge line vacuum breakers close to prevent steam bypass to the DW during SRV discharge, and open following a discharge completion to permit pressure equalization with the DW and prevent ingestion of a water slug into the SRV discharge lines.

(30) The pressure loss coefficient of each of the following components is within the uncertainty band of the pressure loss coefficient used in the natural circulation flow analysis:

- Steam separator
- Fuel bundle
- Fuel support piece orifice
- Control rod guide tubes
- Shroud support

(31) The free volume for each of the following components is within the uncertainty band of the free volume used in the natural circulation flow analysis:

- RPV
- Downcomer

- Core
- Chimney
- Separator/dryer

(32) The hydraulic diameter, geometry of the heated surfaces, and flow area in fuel assemblies are within the uncertainty band of the geometry used in the natural circulation flow analysis.

(33) (Deleted)

(34) (Deleted)

(35) (Deleted)

(36) The main steam line and SRV/SV branch piping geometry precludes first and second shear layer wave acoustic resonance conditions from occurring and avoids pressure loads on the steam dryer at plant normal operating conditions.

Inspections, Tests, Analyses, and Acceptance Criteria

Table 2.1.2-3 provides a definition of the inspections, tests and analyses, together with associated acceptance criteria for the NBS.

Table 2.1.2-1

Nuclear Boiler System Mechanical Equipment

Equipment Name	Equipment ID on Figure 2.1.2-2	ASME Code Section III	Seismic Cat. I	RCPB Component	Containment Isolation Valve	Remotely Operated	Loss of Motive Power Position
Main steam lines to the seismic restraint in the steam tunnel	-	Yes	Yes	Yes	-	-	-
Inboard main steam isolation valves	V8 (Typ. of 4)	Yes	Yes	Yes	Yes	Yes	Closed
Outboard main steam isolation valves	V9 (Typ. of 4)	Yes	Yes	Yes	Yes	Yes	Closed
MSIV actuator and support hardware and associated structural supports	For valves V8, V9 (Typ. of 8)	Portions may be connected to ASME Code systems	Yes	Portions may be connected to RCPB	-	-	-
Main steam flow restrictors	-	Yes	Yes	Yes	-	-	-
Steam line drain/bypass subsystem	-	Yes	Yes	Portions	Inboard and outboard upstream drain isolation valves (see Table 2.15.1-1a)	-	-
Feedwater piping from RPV to seismic restraint upstream of isolation shutoff valve	-	Yes	Yes	Yes	-	-	-

Table 2.1.2-1

Nuclear Boiler System Mechanical Equipment

Equipment Name	Equipment ID on Figure 2.1.2-2	ASME Code Section III	Seismic Cat. I	RCPB Component	Containment Isolation Valve	Remotely Operated	Loss of Motive Power Position
Safety valves (SV)	V7 (Typ. of 8)	Yes	Yes	Yes	No	No	-
Safety relief valves (SRV)	V6 (Typ. of 10)	Yes	Yes	Yes	No	Yes (in relief mode)	Closed for relief mode
Depressurization valves	V5 (Typ. of 8)	Yes	Yes	Yes	No	Yes	Fail as is
RPV head vent subsystem	V1, V2, and V3	Yes	Yes	Yes	No	Yes (no active safety function)	Fail as is

Table 2.1.2-1

Nuclear Boiler System Mechanical Equipment

Equipment Name	Equipment ID on Figure 2.1.2-2	ASME Code Section III	Seismic Cat. I	RCPB Component	Containment Isolation Valve	Remotely Operated	Loss of Motive Power Position
System instrumentation – detection and monitoring (indication in Main Control Room): • Position of MSIVs • Position of DPVs • Position of SRVs • Differential pressure between two feedwater lines • Continuity circuit for each DPV squib device • Continuity circuit for each SRV	-	Safety-related fluid portions only	Yes	Safety-related fluid portions only	Safety-related fluid portions only (see Subsection 2.15.1)	-	-
SRV discharge lines	-	Yes	Yes	-	-	-	-
SRV discharge line vacuum relief valves	V18, V19 (Typ. of 10)	Yes	Yes	No	No	-	-
SRV discharge line quencher	Q1 (Typ. of 10)	Yes	Yes	No	-	-	-

Table 2.1.2-1

Nuclear Boiler System Mechanical Equipment

Equipment Name	Equipment ID on Figure 2.1.2-2	ASME Code Section III	Seismic Cat. I	RCPB Component	Containment Isolation Valve	Remotely Operated	Loss of Motive Power Position
Feedwater outboard isolation valves	V14, V17, V20, V21	Yes	Yes	Yes	Yes	Yes	Closed (gravity close on loss of system pressure)
Feedwater inboard isolation check valves	V12, V15	Yes	Yes	Yes	Yes (will close on reverse flow)	No	-
Feedwater branch line outboard isolation check valves (RWCU/SDC system connections)	V13, V16	Yes	Yes	Yes	Yes (active function to close on LOCA and will close on reverse flow)	Yes	Closed (gravity close on loss of system pressure)

Table 2.1.2-2

Nuclear Boiler System Electrical Equipment

Equipment Name	Equipment ID on Figure 2.1.2-2	Control Q-DCIS/ DPS	Safety-Related Electrical Equipment	Safety-Related Display	Seismic Category I	Remotely Operated	Containment Isolation Valve Actuator
Inboard MSIV	V8 (Typ. of 4)	Yes	Yes	Yes	Yes	Yes	Yes
Outboard MSIV	V9 (Typ. of 4)	Yes	Yes	Yes	Yes	Yes	Yes
SRV	V6 (Typ. of 10)	Yes (ADS – See Section 2.2.13)	Yes	Yes	Yes	Yes	No
DPV	V5 (Typ. of 8)	Yes	Yes	Yes	Yes	Yes	No
Feedwater outboard isolation valves	V14, V17, V20, V21	Yes	Yes	Yes	Yes	Yes	Yes
Feedwater branch line outboard isolation check valves	V13, V16	Yes	Yes	Yes	Yes	Yes	Yes
Reactor pressure transmitters (1 or more in each of the 4 divisions)	-	Yes	Yes	Yes	Yes	-	-
Reactor water level transmitters (1 or more in each of the 4 divisions)	-	Yes	Yes	Yes	Yes	-	-
MSIV isolation logic	-	Yes	Yes	Yes	Yes	-	-

Table 2.1.2-2

Nuclear Boiler System Electrical Equipment

Equipment Name	Equipment ID on Figure 2.1.2-2	Control Q-DCIS/ DPS	Safety-Related Electrical Equipment	Safety-Related Display	Seismic Category I	Remotely Operated	Containment Isolation Valve Actuator
Leak Detection and Isolation System Logic	-	Yes	Yes	Yes	Yes	-	-

Table 2.1.2-3

ITAAC For The Nuclear Boiler System

Design Commitment	Inspections, Tests, Analyses	Acceptance Criteria
1. The functional arrangement of the NBS is as described in the Design Description of this Subsection 2.1.2, Tables 2.1.2-1 and 2.1.2-2 and as shown in Figures 2.1.2-1, 2.1.2-2, and 2.1.2-3.	Inspection of the as-built system will be performed.	The as-built NBS conforms to the functional arrangement described in the Design Description of this Subsection 2.1.2, Tables 2.1.2-1 and 2.1.2-2 and Figures 2.1.2-1, 2.1.2-2, and 2.1.2-3.
2a1. The components identified in Table 2.1.2-1 as ASME Code Section III are designed in accordance with ASME Code Section III requirements.	Inspection of ASME Code Design Reports (NCA-3550) and required documents will be conducted.	ASME Code Design Reports (NCA-3550) (certified, when required by ASME Code) exist and conclude that the design of the components identified in Table 2.1.2-1 as ASME Code Section III complies with the requirements of ASME Code Section III including those stresses applicable to loads related to fatigue (including environmental effects), thermal expansion, seismic, and combined.
2a2. The components identified in Table 2.1.2-1 as ASME Code Section III shall be reconciled with the design requirements.	A reconciliation analysis of the components identified in Table 2.1.2-1 as ASME Code Section III using as-designed and as-built information and ASME Code Design Reports (NCA-3550) will be performed.	ASME Code Design Report(s) (NCA-3550) (certified, when required by ASME Code) exist and conclude that design reconciliation has been completed, in accordance with ASME Code, for as-built reconciliation of the components identified in Table 2.1.2-1 as ASME Code Section III. The report documents the results of the reconciliation analysis.

Table 2.1.2-3

ITAAC For The Nuclear Boiler System

Design Commitment	Inspections, Tests, Analyses	Acceptance Criteria
2a3. The components identified in Table 2.1.2-1 as ASME Code Section III are fabricated, installed, and inspected in accordance with ASME Code Section III requirements.	Inspection of the components identified in Table 2.1.2-1 as ASME Code Section III will be conducted.	ASME Code Data Report(s) (including N-5 Data Reports, where applicable) (certified, when required by ASME Code) and inspection reports exist and conclude that the components identified in Table 2.1.2-1 as ASME Code Section III are fabricated, installed, and inspected in accordance with ASME Code Section III requirements.
2b1. The piping identified in Table 2.1.2-1 as ASME Code Section III is designed in accordance with ASME Code Section III requirements.	Inspection of ASME Code Design Reports (NCA-3550) and required documents will be conducted. {{Design Acceptance Criteria}}	ASME Code Design Report(s) (NCA-3550) (certified, when required by ASME Code) exist and conclude that the design of the piping identified in Table 2.1.2-1 as ASME Code Section III complies with the requirements of ASME Code Section III, including those stresses applicable to loads related to fatigue (including environmental effects), thermal expansion, seismic, and combined. {{Design Acceptance Criteria}}

Table 2.1.2-3

ITAAC For The Nuclear Boiler System

Design Commitment	Inspections, Tests, Analyses	Acceptance Criteria
2b2. The as-built piping identified in Table 2.1.2-1 as ASME Code Section III shall be reconciled with the piping design requirements.	A reconciliation analysis of the piping identified in Table 2.1.2-1 as ASME Code Section III using as-designed and as-built information and ASME Code Design Reports (NCA-3550) will be performed	ASME Code Design Report(s) (NCA-3550) (certified, when required by ASME Code) exist and conclude that design reconciliation has been completed, in accordance with ASME Code, for as-built reconciliation of the piping identified in Table 2.1.2-1 as ASME Code Section III. The report documents the results of the reconciliation analysis.
2b3. The piping identified in Table 2.1.2-1 as ASME Code Section III is fabricated, installed, and inspected in accordance with ASME Code Section III requirements.	Inspections of the piping identified in Table 2.4.2-1 as ASME Code Section III will be conducted.	ASME Code Data Report(s) (certified, when required by ASME Code) and inspection reports (including N-5 Data Reports where applicable) exist and conclude that the piping identified in Table 2.4.2-1 as ASME Code Section III is fabricated, installed, and inspected in accordance with ASME Code Section III requirements.
3a. Pressure boundary welds in components identified in Table 2.1.2-1 as ASME Code Section III meet ASME Code Section III non-destructive examination requirements.	Inspection of the as-built pressure boundary welds in components identified in Table 2.1.2-1 as ASME Code Section III will be performed in accordance with ASME Code Section III.	ASME Code report(s) exist and conclude that ASME Code Section III requirements are met for non-destructive examination of pressure boundary welds in components identified in Table 2.1.2-1 as ASME Code Section III.

Table 2.1.2-3

ITAAC For The Nuclear Boiler System

Design Commitment	Inspections, Tests, Analyses	Acceptance Criteria
3b. Pressure boundary welds in piping identified in Table 2.1.2-1 as ASME Code Section III meet ASME Code Section III non-destructive examination requirements.	Inspection of the as-built pressure boundary welds in piping identified in Table 2.1.2-1 as ASME Code Section III will be performed in accordance with ASME Code Section III.	ASME Code report(s) exist and conclude that ASME Code Section III requirements are met for non-destructive examination of pressure boundary welds in piping identified in Table 2.1.2-1 as ASME Code Section III
4a. The components identified in Table 2.1.2-1 as ASME Code Section III retain their pressure boundary integrity at their design pressure.	A hydrostatic test will be conducted on those code components identified in Table 2.1.2-1 as ASME Code Section III that are required to be hydrostatically tested by ASME Code Section III.	ASME Code Data Report(s) exist and conclude that the results of the hydrostatic test of components identified in Table 2.1.2-1 as ASME Code Section III comply with the requirements of ASME Code Section III.
4b. The piping identified in Table 2.1.2-1 as ASME Code Section III retains its pressure boundary integrity at its design pressure.	A hydrostatic test will be conducted on the code piping identified in Table 2.1.2-1 as ASME Code Section III that is required to be hydrostatically tested by ASME Code Section III.	ASME Code Data Report(s) exist and conclude that the results of the hydrostatic test of piping identified in Table 2.1.2-1 as ASME Code Section III comply with the requirements in ASME Code Section III.
5. The equipment identified in Table 2.1.2-1 and Table 2.1.2-2 as Seismic Category I can withstand Seismic Category I loads without loss of safety function.	i. Inspection will be performed to verify that the Seismic Category I equipment identified in Table 2.1.2-1 and Table 2.1.2-2 are located in a Seismic Category I structure.	i. The equipment identified as Seismic Category I in Table 2.1.2-1 and Table 2.1.2-2 is located in a Seismic Category I structure.

Table 2.1.2-3

ITAAC For The Nuclear Boiler System

Design Commitment	Inspections, Tests, Analyses	Acceptance Criteria
	ii. Type tests, analyses, or a combination of type tests and analyses, of equipment identified in Table 2.1.2-1 and Table 2.1.2-2 as Seismic Category I, will be performed using analytical assumptions, or will be performed under conditions which bound the Seismic Category I equipment design requirements	ii. The equipment identified in Table 2.1.2-1 and Table 2.1.2-2 as Seismic Category I can withstand Seismic Category I loads without loss of safety function.
	iii. Inspection and analyses will be performed to verify that the as-built equipment identified in Table 2.1.2-1 and Table 2.1.2-2 as Seismic Category I, including anchorage, is bounded by the testing or analyzed conditions.	iii. The as-built equipment identified in Table 2.1.2-1 and Table 2.1.2-2 as Seismic Category I, including anchorage, can withstand Seismic Category I loads without loss of safety function.
6a. (Deleted)		
6b. (Deleted)		
7a. Each NBS mechanical train located outside the containment is physically separated from the other train(s) so as not to preclude accomplishment of the intended safety-related function	Inspections and analysis will be conducted for each of the NBS mechanical trains located outside the containment.	Each NBS mechanical train located outside containment is protected against design basis events and their direct consequences by spatial separation, barriers, restraints, or enclosures so as not to preclude accomplishment of the intended safety-related function.

Table 2.1.2-3

ITAAC For The Nuclear Boiler System

Design Commitment	Inspections, Tests, Analyses	Acceptance Criteria
7b. Each NBS mechanical train located inside the containment is physically separated from the other train(s) so as not to preclude accomplishment of the intended safety-related function.	Inspections and analysis will be conducted for each of the NBS mechanical trains located inside the containment.	Each NBS mechanical train located inside containment is protected against design basis events and their direct consequences by spatial separation, barriers, restraints, or enclosures so as not to preclude accomplishment of the intended safety-related function.
8a. The MSIVs close upon command	Valve closure tests will be performed on the as-built MSIVs using a manual closure command to simulate an isolation signal.	The MSIVs close upon command.
8b. The Feedwater Isolation Valves (FWIVs) close upon command	Valve closure tests will be performed on the as-built FWIVs using a manual closure command to simulate an isolation signal.	The FWIVs close upon command
9. (Deleted)		
10. MSIVs and FWIVs fail closed upon loss of electrical power to the valve actuating solenoid.	Tests will be conducted on the as-built valve under preoperational conditions	The MSIVs and FWIVs fail closed upon loss of electrical power to the valve actuating solenoid.
11. Check valves listed in Table 2.1.2-1 open and close under system pressure, fluid flow, and temperature conditions.	Tests of installed valves for opening and closing, will be conducted under system preoperational pressure, fluid flow, and temperature conditions.	Based on the direction of the differential pressure across the valve, each check valve listed in Table 2.1.2-1 opens and closes.
12. The throat diameter of each Main Steamline (MSL) flow restrictor is sized for design choke flow requirements.	Inspections of each as-built MSL flow restrictor throat diameter will be performed	The throat diameter of each MSL flow restrictor is less than or equal to 355 mm (14.0 in).

Table 2.1.2-3

ITAAC For The Nuclear Boiler System

Design Commitment	Inspections, Tests, Analyses	Acceptance Criteria
13. Each MSL flow restrictor has taps for two instrument connections to be used for monitoring the flow through its associated MSL.	Inspections of the as-built installation of each MSL flow restrictor will be conducted to verify that it provides for two instrument connections.	Each as-built MSL flow restrictor provides for two instrument connections.
14. (Deleted)		
15a. The MSIVs are capable of fast closing under design differential pressure, fluid flow and temperature conditions.	Type tests of the MSIV will be conducted in accordance with the design and purchase specifications to demonstrate that the MSIVs will fast close under design conditions.	The MSIVs are capable of fast closure in not less than 3 seconds and not more than 5 seconds under design conditions.
15b. The FWIVs are capable of fast closing under design differential pressure, fluid flow and temperature conditions.	Type tests of the FWIVs will be conducted in accordance with the design and purchase specifications to demonstrate that the FWIVs will fast close under design conditions.	The FWIVs are capable of fast closure in not less than 10 seconds and not more than 15 seconds under design conditions.
16a. When all four inboard or outboard MSIVs are stroked from full-open to full-closed position by their actuators, the combined leakage through the MSIVs for all four MSLs will be less than or equal to the design bases assumption value.	Tests at preoperational conditions along with analysis will be performed on the as-built MSIVs to determine the leakage as adjusted to the specified design conditions.	When all MSIVs are stroked from the full-open to full-closed position by their actuators, the combined leakage through the MSIVs for all four MSLs is less than or equal to a total combined leakage (corrected to standard conditions) of less than or equal to 94.4 liters/minute (3.33 ft^3/minute) for post-LOCA leakage.

Table 2.1.2-3

ITAAC For The Nuclear Boiler System

Design Commitment	Inspections, Tests, Analyses	Acceptance Criteria
16b. When all four FWIVs are stroked from full-open to full-closed position by their actuators, the combined liquid inflow leakage through the FWIVs for both feedwater lines will be less than or equal to the design bases assumption value.	Tests using demineralized water and analysis will be performed on the as-built FWIVs to determine the liquid inflow leakage as adjusted to the specified design conditions.	When all FWIVs are stroked from the full-open to full-closed position by their actuators, the combined leakage through the FWIVs for both feedwater lines is less than or equal to a total combined liquid inflow leakage (corrected to standard conditions) of less than or equal to 900 cc/minute (0.238 gpm) for post-LOCA leakage.
16c. When all four FWIVs are stroked from full-open to full-closed position by their actuators, the combined gas outflow leakage through the FWIVs for both feedwater lines will be less than or equal to the design bases assumption value.	Tests and analysis will be performed on the as-built FWIVs to determine the gas outflow leakage as adjusted to the specified design conditions.	When all FWIVs are stroked from the full-open to full-closed position by their actuators, the combined leakage through the FWIVs for both feedwater lines is less than or equal to a total combined gas outflow leakage (corrected to standard conditions) of less than or equal to 700 cc/minute (1.483 ft^3/hour) for post-LOCA leakage.
17. The opening pressure for the Safety Relief Valves (SRVs) setpoint in mechanical lift mode validates the overpressure protection analysis by lifting at its nominal setpoint pressure.	Type tests or setpoint tests will be conducted in accordance with the ASME Code to certify the valves.	The mechanical lift nominal setpoint pressure of 8.366 $\pm$ 0.251 MPaG (1213 $\pm$ 36 psig).

Table 2.1.2-3

ITAAC For The Nuclear Boiler System

Design Commitment	Inspections, Tests, Analyses	Acceptance Criteria
18. The opening time for the SRVs in the overpressure operation of self-actuated or mechanical lift mode, which is measured from when the pressure exceeds the valve set pressure to when the valve is fully open, shall be less than or equal to the design opening time.	Analysis and type tests will be conducted in accordance with the ASME Code to ensure that the valves open within the design opening time.	The opening time (as measured from when the pressure exceeds the valve set pressure to when the valve is fully open) for the SRVs in the overpressure operation of self-actuated or mechanical lift mode is less than or equal to 0.5 seconds.
19. The steam discharge capacity of each SRV validates (i.e., is greater than or equal to that used in) the overpressure protection analysis.	Type tests will be conducted in accordance with the ASME Code Section III for relief valve certification.	Valve capacity stamping on each SRV records the certified capacity at rated setpoint of 138 kg/s (304 lbm/s) minimum.
20. The opening pressure for the Safety Valves (SVs) validates (i.e. is less than or equal to that used in) the overpressure protection analysis.	Type tests or setpoint tests will be conducted in accordance with the ASME Code Section III to certify the valve.	The mechanical lift nominal setpoint pressure of 8.503 $\pm$ 0.255 MPaG (1233 $\pm$ 37 psig).
21. The opening time for the SVs, measured from when the pressure exceeds the valve set pressure to when the valve is fully open, shall be less than or equal to the design opening time.	Analysis and type tests will be conducted in accordance with the ASME Code Section III to ensure that the valves open within the design opening time.	The opening time (measured from when the pressure exceeds the valve set pressure to when the valve is fully open) for the SVs is less than or equal to 0.5 seconds.
22. The steam discharge capacity of each SV validates (i.e., is greater than or equal to that used in) the overpressure protection analysis.	Type tests will be conducted in accordance with the ASME Code Section III for relief valve certification.	Valve capacity stamping on each SV records the certified capacity at rated setpoint of 140.2 kg/s (309 lbm/s) minimum.

Table 2.1.2-3

ITAAC For The Nuclear Boiler System

Design Commitment	Inspections, Tests, Analyses	Acceptance Criteria
23. The relief-mode actuator (and safety-related appurtenances) can open each SRV with the DW pressure at design pressure.	An analysis and type test will be performed to demonstrate the capacity Section III of the relief-mode actuation for each SRV.	The relief-mode actuation has the capacity to lift the SRVs to the full open position one time with the DW pressure at the DW design pressure when the accumulator is isolated from its pneumatic pressure source.
24. The booster assembly opens each Depressurization Valve DPV in less than or equal to the design opening time (opening time to full rated capacity).	Type testing will be performed on the booster assemblies to confirm that they are capable of opening the valve at design basis conditions. Type testing, along with analyses to adjust for design basis conditions will be performed to demonstrate that the booster opens each DPV within the design opening time (opening time to full rated capacity) and design conditions.	Each DPV opens when actuated by the booster assembly in less than or equal to 0.45 seconds with an inlet pressure of 7,584 kPa ± 685 kPaG (1100 psig ± 99 psi).
25. Each DPV minimum flow capacity is sufficient to support rapid depressurization of the RPV (i.e., has a flow capacity that is greater than or equal to the design flow capacity under design basis conditions).	Analyses and type tests will be performed.	The DPV flow capacity is greater than or equal to 239 kg/s (527 lbm/s) at an inlet pressure of 7.480 MPaG (1085 psig).
26. (Deleted)		
27. (Deleted)		

Table 2.1.2-3

ITAAC For The Nuclear Boiler System

Design Commitment	Inspections, Tests, Analyses	Acceptance Criteria
28. Vacuum breakers are provided on SRV discharge lines to reduce the post-discharge reflood height of water in the discharge lines.	An inspection and analysis will be performed to confirm that the vacuum breakers are installed and to demonstrate that the vacuum breaker capacity and setpoint limit the water column in the discharge line.	The vacuum breakers are installed on the SRV discharge lines and the vacuum breaker capacity and setpoint limit the water column in the discharge line.
29. The SRV discharge line vacuum breakers close to prevent steam bypass to the DW during SRV discharge, and open following discharge completion to permit pressure equalization with the DW and prevent ingestion of a water slug into the SRV discharge lines.	Type test will be performed on the vacuum breaker for disk-closed leakage at line pressure during SRV discharge, disk cracking (unseating) pressure, and full-open flow capacity.	The following test criteria are met: • At SRV discharge line pressure during SRV discharges, the vacuum breaker leak rate is less than or equal to design leak rate; • The disk unseat begins at design cracking pressure; and, • At disk full lift, the vacuum breaker achieves equal to or greater than design flow capacity.

Table 2.1.2-3

ITAAC For The Nuclear Boiler System

Design Commitment	Inspections, Tests, Analyses	Acceptance Criteria
30. The pressure loss coefficient of each of the following components is within the uncertainty band of the pressure loss coefficient used in the natural circulation flow analysis: • Steam separator • Fuel bundle • Fuel support piece orifice • Control rod guide tubes • Shroud support	As-built component records will be inspected and compared against inputs to the natural circulation analysis, considering uncertainty, performed to calculate pressure loss coefficients.	The pressure loss coefficient of each of the following components is within the uncertainty band of the pressure loss coefficient used in the natural circulation flow analysis: • Steam separator • Fuel bundle • Fuel support piece orifice • Control rod guide • Shroud support
31. The free volume for each of the following components is within the uncertainty band of the free volume used in natural circulation flow analysis: • RPV • Downcomer • Core • Chimney • Separator/dryer	Inspection of as-built component records will be performed to determine the component free volume for each of the listed components.	The free volume of each of the following components is within the uncertainty band of the free volume used in the natural circulation flow analysis: • RPV • Downcomer • Core • Chimney • Separator/dryer

Table 2.1.2-3

ITAAC For The Nuclear Boiler System

Design Commitment	Inspections, Tests, Analyses	Acceptance Criteria
32. The hydraulic diameter, geometry of heated surfaces, and flow area in fuel assemblies are within the uncertainty band of the geometry used in the natural circulation flow analysis.	As-built dimension inspection and analyses will be performed to determine the geometry of the fuel assemblies to be loaded.	The hydraulic diameter, geometry of heated surfaces, and flow area in the fuel assemblies are within the uncertainty band of the geometry used in the natural circulation flow analysis.
33. (Deleted)		
34. (Deleted)		
35. (Deleted)		
36. The main steam line and SRV/SV branch piping geometry precludes first and second shear layer wave acoustic resonance conditions from occurring and avoids pressure loads on the steam dryer at plant normal operating conditions.	Analysis of the as-built piping system and equipment analysis, for acoustic resonance at plant normal operating conditions, will be performed.	The main steam line and SRV/SV branch piping geometry precludes first and second shear layer wave acoustic resonance conditions from occurring and results in no significant pressure loads on the steam dryer at plant normal operating conditions.

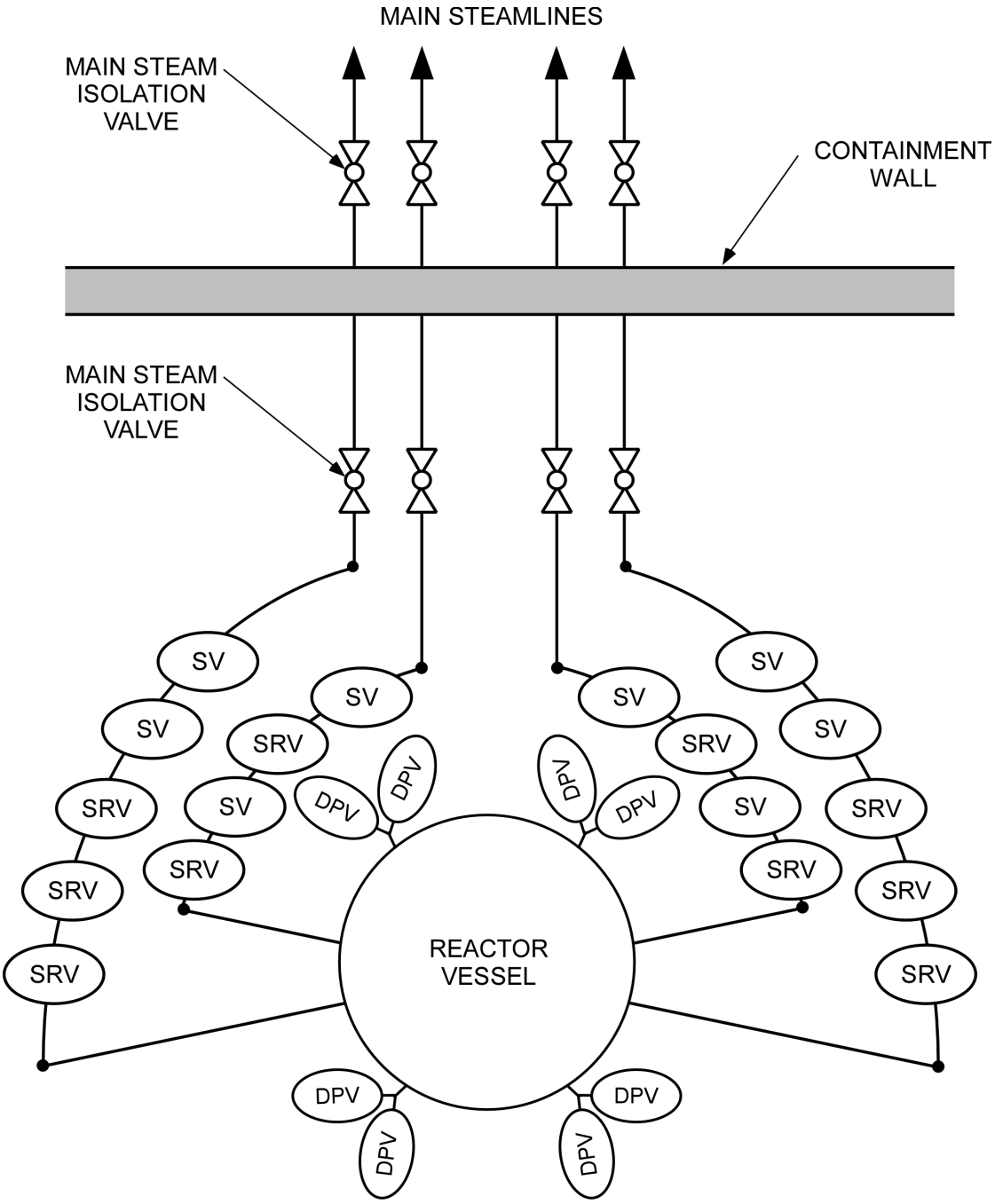

Figure 2.1.2-1. Safety Relief Valves, Depressurization Valves and Steamline Diagram

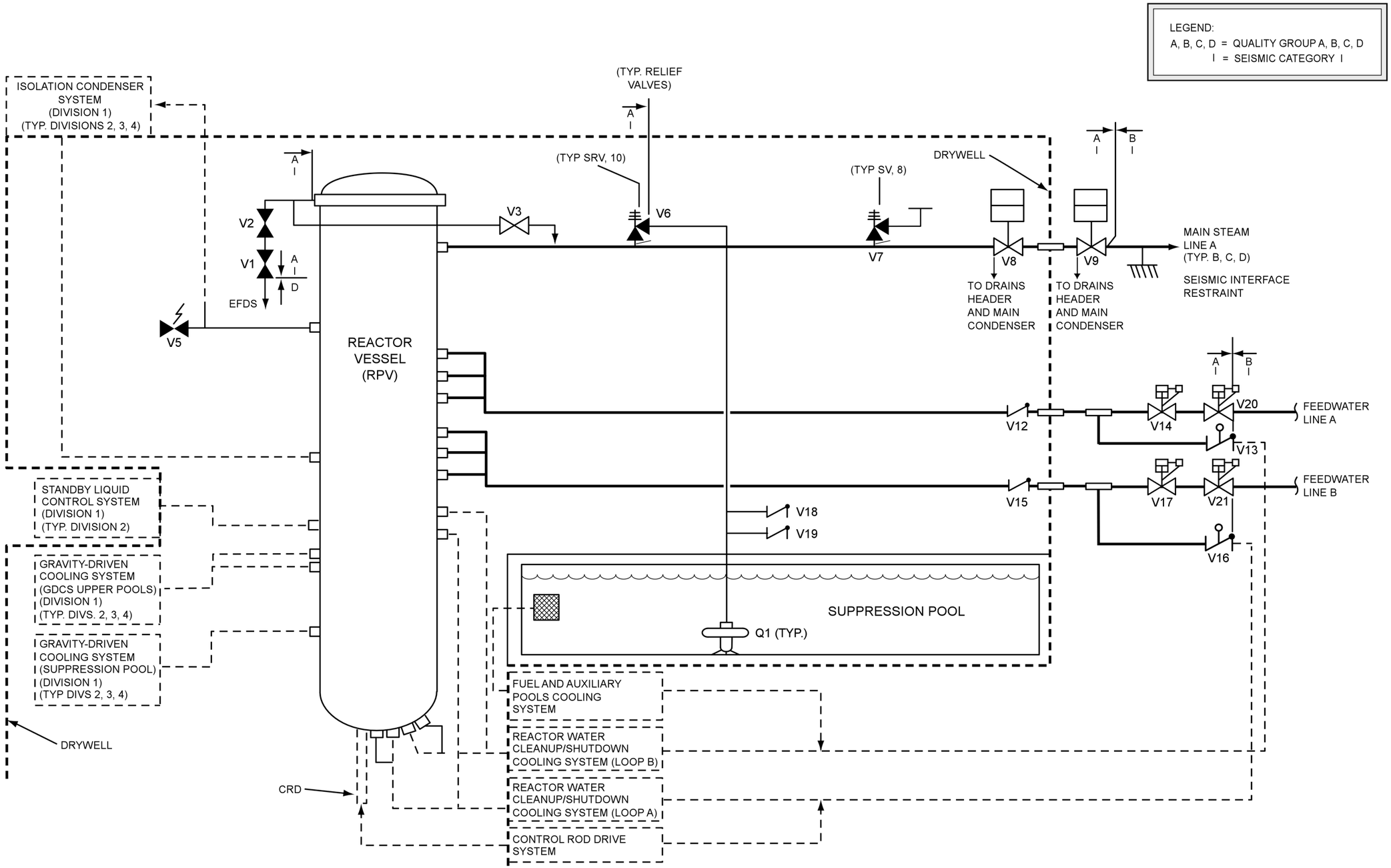

Figure 2.1.2-2. NBS Steamlines and Feedwater Lines

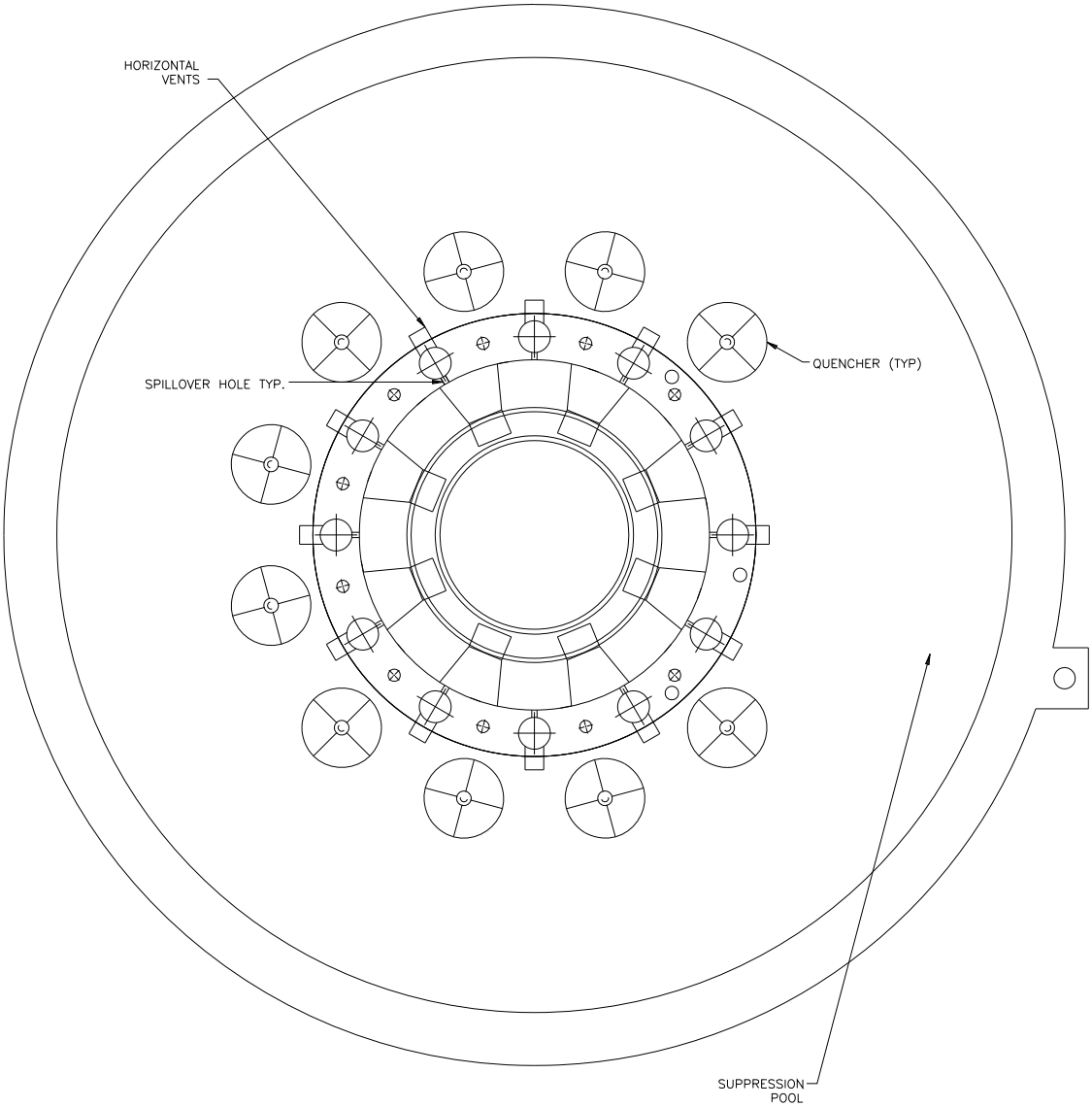

Figure 2.1.2-3. Safety Relief Valve Discharge Line Quencher Arrangement

2.2 INSTRUMENTATION AND CONTROL SYSTEMS

The following subsections describe the major instrumentation and control (I&C) systems for the ESBWR.

2.2.1 Rod Control and Information System

Design Description

The Rod Control and Information System (RC&IS) automatically controls and monitors, and provides manual control capability for, positioning of the control rods in the reactor by the Control Rod Drive (CRD) System.

RC&IS alarms, displays, and status indications in the MCR are addressed in Section 3.3.

(1) RC&IS functional arrangement is as described in Subsection 2.2.1 and Table 2.2.1-1.

(2) RC&IS is divided into major functional groups as defined in Table 2.2.1-2.

(3) RC&IS provides automatic functions and initiators as defined in Table 2.2.1-3.

(4) RC&IS provides rod block functions as defined in Table 2.2.1-4.

(5) RC&IS provides controls, interlocks, and bypasses as defined in Table 2.2.1-5.

(6) (Deleted)

(7) RC&IS has a dual redundant architecture.

(8) RC&IS equipment is powered by separate, non-divisional AC power sources.

(9) RC&IS has at least one power source being a nonsafety-related uninterruptible power supply.

Inspections, Tests, Analyses, and Acceptance Criteria

Table 2.2.1-6 defines the inspections, tests, and analyses, together with associated acceptance criteria for the RC&IS.

Table 2.2.1-1

RC&IS Functional Arrangement

RC&IS Dedicated Operator Interface is located in the MCR.
RC&IS equipment is located in mild environment rooms within the Reactor Building (RB) and Control Building (CB).

Table 2.2.1-2

RC&IS Major Functional Groups

Major Functional Group	Functions
Rod Control and Information System Dedicated Operator Interface	Provides control rod position, Fine Motion Control Rod Drive (FMCRD status, RC&IS status, and Hydraulic Control Unit (HCU) status information to the plant operator in MCR. Provides controls for performing normal rod movement functions, bypassing major RC&IS subsystems, performing CRD surveillance tests, and resetting RC&IS trips and abnormal status conditions.
Rod Action Control System (RACS)	Comprises the following subsystems: • Rod Action and Position Information (RAPI) • RAPI DOI that displays the same information that is available on the RC&IS Dedicated Operator Interface • RAPI Signal Interface Unit (SIU) • Rod Worth Minimizers (RWM) • Automated Thermal Limited Monitor (ATLM)
Rod Action and Position Information (RAPI)	Performs manual, semi-automatic, and automatic rod movement commands. Performs rod blocks, as defined in Table 2.2.1-4, based upon internal RC&IS signals from either channel: • ATLM • RWM • RAPI SIU Performs rod blocks, as defined in Table 2.2.1-4, based upon external input signals: • Safety-related RPS Reactor Mode Switch position. • Safety-related NMS SRNM. • Safety-related NMS APRM.

Table 2.2.1-2

RC&IS Major Functional Groups

Major Functional Group	Functions
RAPI (Continued)	• Nonsafety-related NMS Multi-Channel Rod Block Monitor (MRBM). • Safety-related FMCRD control rod separation switches. • Nonsafety-related refueling platform position. • Nonsafety-related refueling hoist load condition. Maintains a mirror copy of the N-DCIS reference rod pull sequence in memory. Enforces adherence to reference rod pull sequence; deviation from the RRPS causes RAPI logic to issue the following: • Issue rod block as defined in Tables 2.2.1-3 and 2.2.1-4. • Switch to RC&IS manual mode; disable automatic and semi-automatic modes of operation. • Send alarm signal to MCR that RC&IS is in manual mode. Provides control rod position and FMCRD status information to the N-DCIS, the NMS, the RWM, and the ATLM. Performs the scram-follow function. Performs the Selected Control Rod Run-in (SCRRI) function. Sends a SCRRI signal to the Diverse Protection System (DPS) to initiate the SRI function. Performs Alternate Rod Insertion (ARI) motor run-in function. Sends/receives rod movement commands, rod position, FMCRD status information, and RC&IS-related status information. Sends HCU purge water valve control signals Sends and receives HCU status signals.

Table 2.2.1-2

RC&IS Major Functional Groups

Major Functional Group	Functions
	Provides capability to perform the following CRD System surveillance tests: • Scram Time Test, • Coupling Check Test, and • Double-Notch Test.
Rod Action and Position Information Signal Interface Unit (RAPI SIU)	Handles RAPI inter-channel communication between ATLM, RWM, and RAPI A and B channels and external communication with the nonsafety-related NMS MRBM.
Rod Worth Minimizer (RWM)	Enforces absolute rod pattern restrictions, called the Ganged Withdrawal Sequence Restrictions (GWSR) when reactor power is below the low power setpoint (LPSP) and the RPS reactor mode switch in either the STARTUP or RUN position. Supports shutdown margin testing
Auto Thermal Limit Monitor (ATLM)	Microprocessor-based subsystem of the RC&IS Enforces Operating Limit Minimum Critical Power Ratio (OLMCPR) Enforces the Operating Limit Maximum Linear Heat Generation Rate (OLMLHGR) Issues rod withdrawal block signals Issues high-pressure FW heater bypass valves one-way block signal. Issues seventh FW heater steam heating valves one-way block signal. Initiates SCRRI/SRI functions on Loss of FW Heating
Remote Communication Cabinets (RCCs)	Houses the redundant microprocessor-based communication system that interfaces with the RAPI, MCC, and RBCC.
Motor Control Center (MCCs)	Houses the FMCRD motor controllers. Interfaces with RCC, RBCC and Emergency Rod Insertion Panel (ERIP)
Rod Brake Controller Cabinets (RBCCs)	Operates the FMCRD holding brakes Interfaces with RCC.

Table 2.2.1-2

RC&IS Major Functional Groups

Major Functional Group	Functions
Emergency Rod Insertion Control Panel (ERICP)	Located in CB. Relay-hardware based, nonsafety-related control system that alternatively commands scram follow, ARI, and SCRRI.
Emergency Rod Insertion Panel (ERIP)	Interface with the MCC FMCRD motor controllers.
Scram Time Recording Panels	Monitors the FMCRD position switch status Automatically records and time tags FMCRD scram timing position switch status changes Transmits recorded scram timing data to the scram time recording and analysis panel (STRAP) Communicates with the RAPI
Scram Time Recording and Analysis Panel (STRAP)	Performs scram timing performance analysis
RAPI Auxiliary Panels	Open HCU purge water valve. Monitor scram valve position. Monitor scram accumulator water pressure. Monitor scram accumulator water level. Send data to RAPI subsystem.

Table 2.2.1-3

RC&IS Automatic Functions, Initiators, and Associated Interfacing Systems

Function	Initiator	Interfacing System
Initiate Rod Block and Terminate Rod Withdrawal (See Table 2.2.1-4 for a complete list of rod blocks.)	ATLM Operating Limit Minimum Critical Power Ratio (OLMCPR) parameter greater than or equal to setpoint.	NMS
	ATLM Operating Limit Maximum Linear Heat Generation Rate (OLMLHGR) parameter greater than or equal to setpoint.	NMS
	SRNM period greater than or equal to setpoint.	NMS
	RWM function sequence error.	NMS
	Refueling platform over core and fuel on hoist.	The RB refueling machine
	Reactor Mode Switch (RMS) in SHUTDOWN position	RPS
	Scram accumulator charging water header pressure - low	CRD System
	Scram accumulator charging water header pressure - low-low trip bypass	CRD System
	RWM function parameter greater than or equal to setpoint.	NMS
	Large deviation of control rod positions from RRPS in selected gang.	-
	Any attempt to withdraw an additional rod beyond the original control rod pair.	-
	RAPI trouble	-
	RAPI Signal Interface Unit trouble	-

Table 2.2.1-3

RC&IS Automatic Functions, Initiators, and Associated Interfacing Systems

Function	Initiator	Interfacing System
SCRRI	Generator load rejection signal. FW temperature low. Turbine trip signal. SCRRI initiation signal	TGCS DPS TGCS DPS
Rod separation detection rod block	Safety-related rod separation switches.	CRD System
Scram follow / ARI FMCRD motor run-in	See Table 2.2.7-2 for RPS scram initiating conditions and Table 2.2.14-2 for DPS scram initiating conditions.	RPS, DPS
One-way block high-pressure seventh FW heater bypass valves	ATLM issues high-pressure FW heater bypass valves one-way block	Feedwater Control System (FWCS)
One-way block high-pressure seventh FW heater steam heating valves one-way block	ATLM issues high-pressure seventh FW heater steam heating valves one-way block	FWCS

Table 2.2.1-4

RC&IS Rod Block Functions

Rod Block	Permissive Condition	Description
Rod separation detection	RMS: STARTUP or RUN	Rod withdrawal block only for those selected rod(s) for which the separation condition is detected and are not in the Inoperable Bypass condition.
RMS in SHUTDOWN position	RMS: SHUTDOWN	Rod withdrawal block for all control rods.
SRNM withdrawal block	RMS: SHUTDOWN, REFUEL, or STARTUP	Rod withdrawal block for all control rods.
APRM withdrawal block	None	Rod withdrawal block for all control rods.
CRD charging water low pressure	None	Rod withdrawal block for all control rods.
CRD charging water low-pressure trip bypass	None	Rod withdrawal block for all control rods.
RWM withdrawal block	Reactor power less than setpoint	Rod withdrawal block for all control rods.
RWM insert block	Reactor power less than setpoint	Rod insertion block for all control rods.
ATLM withdrawal block	Reactor power greater than setpoint	Rod withdrawal block for all control rods.
MRBM withdrawal block	Reactor power greater than setpoint	Rod withdrawal block for all control rods.
Gang large deviation	RC&IS Mode Switch: GANG:	Rod withdrawal block for all operable control rods of the selected gang upon detection of: – Large deviation of control rod positions from RRPS in selected gang. – Any attempt to withdraw an additional rod beyond the original control rod pair.

Table 2.2.1-4

RC&IS Rod Block Functions

Rod Block	Permissive Condition	Description
Refuel mode withdrawal block	RMS: REFUEL, refueling platform over RPV, and fuel bundle on crane	Rod withdrawal block for all control rods.
Startup mode withdrawal block	RMS: STARTUP and refueling platform over RPV	Rod withdrawal block for all control rods.
RAPI trouble	RRPS active	Rod withdrawal block and rod insertion block for all control rods.
RAPI Signal Interface Unit trouble	None	Rod withdrawal block for all control rods when difference detected between any pair of input or output A and B channels.
Electrical group power abnormal	None	Rod withdrawal block and rod insertion block for all control rods.

Table 2.2.1-5

RC&IS Controls, Interlocks, and Bypasses

Function	Description
Control	Single / Ganged mode selection. Automatic / semi-automatic / manual mode selection. Normal / notch / continuous control rod movement mode Insert / Withdraw. SCRRI/SRI manual initiation. ARI manual initiation (DPS)
Interlock	Single / Dual Rod Sequence Restriction Override (S/DRSRO) allows an operator to place up to two control rod associated with the same HCU in S/DRSRO for scram time surveillance testing. Rod Inoperable Bypass condition allows up to 8 control rod to be selected with the Reactor Mode Switch (RMS) in RUN position (RPS). Rod Inoperable Bypass condition allows up to 54 control rod to be selected with the RMS in REFUEL position (RPS).
Bypass	RC&IS is capable of continued operation when different subsystems of RC&IS are bypassed using the following bypass functions: Rod position detector channel bypass. S/DRSRO. Rod Inoperable Bypass selection. Communication channel bypasses. ATLM channel bypass. RWM channel bypass. RAPI channel bypass.

Table 2.2.1-6

ITAAC For The Rod Control and Information System

Design Commitment	Inspections, Tests, Analyses	Acceptance Criteria
1. RC&IS functional arrangement is as described in Subsection 2.2.1 and Table 2.2.1-1.	Inspection(s) of the as-built system will be performed.	The as-built system conforms with the functional arrangement defined in Subsection 2.2.1 and Table 2.2.1-1.
2. RC&IS is divided into major functional groups as defined in Table 2.2.1-2.	Inspection(s) of the as-built system will be performed.	Test and inspection report(s) document that the as-built system is divided into major functional groups as defined in Table 2.2.1-2.
3. RC&IS provides automatic functions and initiators, as defined in Table 2.2.1-3.	Test(s) will be performed for the initiators on the as-built RC&IS using simulated signals and actuators for the automatic functions defined in Table 2.2.1-3.	Test and type test report(s) document that the RC&IS is capable of performing the automatic functions as defined in Table 2.2.1-3.
4. RC&IS provides rod block functions as defined in Table 2.2.1-4.	Test(s) will be performed using simulated signals and manual actions to confirm that the rod withdrawal and insertion commands are blocked as defined in Table 2.2.1-4.	The rod block functions defined in Table 2.2.1-4 are performed in response to simulated signals and manual actions.
5. RC&IS provides controls, interlocks, and bypasses as defined in Table 2.2.1-5.	Test(s) will be performed on the as-built system using simulated signals and manual actions.	The system controls, interlocks, and bypasses exist, can be retrieved in the main control room, or are performed in response to simulated signals and manual actions as defined in Table 2.2.1-5.
6. (Deleted)		

Table 2.2.1-6

ITAAC For The Rod Control and Information System

Design Commitment	Inspections, Tests, Analyses	Acceptance Criteria
7. RC&IS has a dual redundant architecture.	Test(s) will be performed on the as-built system that simulate failure of each redundant channel.	The surviving channel continues to execute system functions with one failed channel.
8. RC&IS equipment is powered by separate, non-divisional AC power sources.	Test(s) will be performed on the as-built system by simulating a failure of AC power.	A test signal exists only in the channel under test.
9. RC&IS has at least one power source being a nonsafety-related uninterruptible power supply.	Test(s) will be performed on the as-built system by providing a test signal in only one channel at a time.	The test signal exists from at least one nonsafety-related uninterruptible AC power supply only in the channel under test.

Figure 2.2.1-1. (Deleted)

2.2.2 Control Rod Drive System

Design Description

The control rod drive (CRD) system, manually and automatically upon signal from the RPS, DPS, and RC&IS, provides rapid control rod insertion (scram), performs fine control rod positioning (reactivity control), detects control rod separation (prevent rod drop accident), limits the rate of control rod ejection due to a break in the control rod pressure boundary (prevent fuel damage), and supplies high pressure makeup water to the reactor during events in which the feedwater system is unable to maintain reactor water level.

CRD system alarms, displays, controls, and status indications in the MCR are addressed by Section 3.3.

Conformance with IEEE Std. 603 requirements by the safety-related control system structures, systems, or components defined in Table 2.2.2-6 is addressed in Subsection 2.2.15.

The environmental qualification of CRD system components defined in Tables 2.2.2-5 and 2.2.2-6 is addressed in Section 3.8; and the environmental and seismic qualification of digital instrumentation and controls equipment is addressed in Section 3.8.

CRD system software is developed in accordance with the software development program described in Section 3.2 as part of the Plant Investment Protection (PIP) software projects.

(1) The functional arrangement of the CRD System comprises three major functional groups: fine motion control rod drive (FMCRD), hydraulic control unit (HCU), and CRD hydraulic subsystem, as described in Subsection 2.2.2 and Table 2.2.2-1 and shown in Figure 2.2.2-1.

(2) a1. The components identified in Table 2.2.2-5 as ASME Code Section III are designed in accordance with ASME Code Section III requirements.

a2. The components identified in Table 2.2.2-5 as ASME Code Section III shall be reconciled with the design requirements.

a3. The components identified in Table 2.2.2-5 as ASME Code Section III are fabricated, installed, and inspected in accordance with ASME Code Section III requirements.

b1. The piping identified in Table 2.2.5-5 as ASME Code Section III is designed in accordance with ASME Code Section III requirements.

b2. The as-built piping identified in Table 2.2.2-5 as ASME Code Section III shall be reconciled with the piping design requirements.

b3. The piping identified in Table 2.2.2-5 as ASME Code Section III is fabricated, installed, and inspected in accordance with ASME Code Section III requirements.

(3) a. Pressure boundary welds in components identified in Table 2.2.2-5 as ASME Code Section III meet ASME Code Section III non-destructive examination requirements.

b. Pressure boundary welds in piping identified in Table 2.2.2-5 as ASME Code Section III meet ASME Code Section III non-destructive examination requirements.

(4) a. The components identified in Table 2.2.2-5 as ASME Code Section III retain their pressure boundary integrity at their design pressure.

b. The piping identified in Table 2.2.2-5 as ASME Code Section III retains its pressure boundary integrity at its design pressure.

(5) The equipment identified in Table 2.2.2-5 and Table 2.2.2-6 as Seismic Category I can withstand Seismic Category I loads without loss of safety function.

(6) The FMCRD is capable of positioning control rod incrementally and continuously over its entire range.

(7) Valves defined in Table 2.2.2-5 and 2.2.2-6 open and close under differential pressure, fluid flow, and temperature conditions.

(8) a. The CRD hydraulic subsystem has a high-pressure makeup mode of operation that injects water to the RPV via the Reactor Water Cleanup/Shutdown Cooling RWCU/SDC return path.

b. The CRD hydraulic subsystem has a safety-related isolation capability terminating injection into the RPV.

c. The CRD hydraulic subsystem has an isolation bypass capability allowing injection to the RPV.

(9) The PIP software project for the CRD system provides automatic functions, initiators, and associated interfacing systems as defined in Table 2.2.2-3.

(10) The PIP software project for the CRD system provides controls and interlocks as defined in Table 2.2.2-4.

(11) (Deleted)

(12) The CRD system provides rapid control rod insertion in response to a scram signal.

(13) (Deleted)

(14) (Deleted)

(15) The FMCRD has an electro-mechanical brake with a minimum required holding torque on the motor drive shaft.

(16) a. Valves on lines attached to the RPV system that require maintenance have maintenance valves such that freeze seals will not be required.

b. The as-built location of valves on lines attached to the CRD system that require maintenance shall be reconciled to design requirements.

(17) High Pressure (HP) CRD makeup water isolation valves are normally open and close on a signal to close and on loss of air.

(18) HP CRD makeup water isolation bypass valves are normally closed and open on a signal to open.

(19) FMCRDs have continuous control rod position indication sensors that detect control rod position based on motor rotation.

(20) FMCRDs have scram position indication switches that detect intermediate and scram completion control rod positions.

(21) FMCRDs have a bayonet control rod coupling mechanism that requires a minimum rotation to decouple.

(22) FMCRDs have spring-loaded latches in the hollow piston that engage slots in the guide tube to prevent rotation of the bayonet coupling except at predefined positions.

(23) FMCRDs have redundant safety-related rod separation switches that detect separation of the FMCRD from the control rod.

(24) Each FMCRD has a magnetic coupling that connects the associated drive motor to the drive shaft through the associated CRD housing.

(25) FMCRDs have safety-related scram inlet port check valves that are installed to close under reverse flow.

(26) HCU scram pilot solenoid valves transfer open to vent on loss of power to both solenoids.

(27) Backup scram solenoid valves are closed on loss of power and transfer open to vent when energized.

(28) ARI valves are closed on loss of power and transfer open to vent when energized.

(29) Each HCU contains a nitrogen-water scram accumulator that can be charged to a sufficiently high pressure and with the necessary valves and components to fully insert two CRs.

(30) Scram accumulators are continuously monitored for water leakage by level instruments.

(31) Divisional safety-related power supplies power safety-related FMCRD and HCU equipment.

Inspections, Tests, Analyses, and Acceptance Criteria

Table 2.2.2-7 defines the inspections, tests, and analyses, together with associated acceptance criteria for the CRD system.

Table 2.2.2-1

CRD System Functional Arrangement

HCUs are located in four dedicated rooms in the Reactor Building (RB).
HCUs provide a flow path for purge water to the associated FMCRDs during normal operation.
HCUs have a test port to allow connection of temporary test equipment for the conduct of FMCRD ball check valve testing and drive friction testing.
FMCRDs are mounted to the reactor vessel bottom head inside containment.

Table 2.2.2-2

CRD Maximum Allowable Scram Times for

Vessel Bottom Pressures Below 7.481 MPaG (1085 psig)

Percent Insertion	Time (sec)
10	0.34
40	0.80
60	1.15
100	2.23

Table 2.2.2-3

CRD System Automatic Functions, Initiators, and Associated Interfacing Systems

Function	Initiator	Interfacing System
Hydraulic scram	RPS scram signal	RPS and DPS
Scram follow/ARI motor run-in	RPS scram signal / DPS scram signal	RPS and DPS
Provide makeup water to RPV	RPV water level low (L2)	NBS
SCRRI (electric)	SCRRI signals	RC&IS and DPS
ARI (hydraulic)	DPS ARI signal	DPS
SRI (hydraulic)	DPS SRI signals	DPS
Isolate makeup water to RPV	GDCS Pool level low Drywell pressure high and Drywell level high	LD&IS
Isolation Bypass	GDCS initiation logic and time delay and GDCS Pool level not low	GDCS

Table 2.2.2-4

CRD System Controls and Interlocks

Parameter	Description
Control	Manual start (CRD pumps)
Interlock	High pressure makeup mode (RPV water level low (Level 2)) • The standby CRD pump is started. Both pumps operate in parallel to deliver the required makeup flow capacity to the reactor. • The two pump suction filter bypass valves are opened. • The scram accumulator charging water header isolation valve and purge water header isolation valve are closed. • Each pump minimum flow line isolation valve closes. • The flow control valves in the high pressure makeup lines open to regulate the makeup water flow rate to the reactor. • The test valve in the high pressure makeup line to the RWCU/SDC system opens if it is closed at the start of the event and the test valve in the return line to the CST closes if it is open at the start of the event. • The high pressure makeup flow control valves close to stop flow to the reactor at high reactor water Level 8. • Each pump minimum flow line isolation valve opens and both pumps continue to operate in a low flow condition by directing their flow back to the CST through the pump minimum flow lines.

Table 2.2.2-4(Continued)

CRD System Controls and Interlocks

Parameter	Description
	• The control valves reopen and the pump minimum flow isolation valve closes to restart high pressure makeup flow if a subsequent Level 2 signal should occur. Normal operation mode (CRD common pump discharge line pressure low) • Start standby CRD pump. Normal operation mode (CRD pump inlet pressure low) • Trip running CRD pump after expiration of an adjustable time delay. Normal operation mode (pump lube oil pressure low) • Trip running CRD pumps and remove CRD pump start permissive condition. Normal operation mode (rod separation detection) • Send individual rod block initiate signal to RC&IS. Normal operation mode (scram accumulator charging water header pressure - low) • Send all rods block initiate signal to RC&IS. Normal operation mode (rod gang misalignment) • Send all rods in gang block initiate signal to RC&IS. High pressure makeup mode (inboard FW maintenance valve closed) • Inhibit opening (makeup water) injection valves. High pressure makeup mode (at least two GDCS pool levels low or Drywell pressure high and Drywell level high) • Isolate CRD pumps to allow both pumps to operate in a low flow condition by directing their flow back to the CST through the pump minimum flow lines.

Table 2.2.2-4(Continued)

CRD System Controls and Interlocks

Parameter	Description
	High pressure makeup mode Isolation Bypass (GDCS initiation logic and time delay and at least two GDCS pools not low) • The HP CRD Isolation Bypass valves open to allow normal high pressure makeup mode. CRD common pump discharge line pressure low • Starts the standby pump. CRD common pump discharge line flow • Modulates purge water control valves. Injection flow • Modulates injection valves.

Table 2.2.2-5

Control Rod Drive System Mechanical Equipment

Equipment Name (Description)	Equipment Identifier See Figure 2.2.2-1	ASME Code Section III	Seismic Cat. I	RCPB Component	(Deleted)	MCR Alarms
FMCRD components required for scram	FMCRD	No	Yes	No		–
FMCRD reactor coolant primary pressure boundary components	FMCRD	Yes	Yes	Yes		–
HCU components required for scram	HCU	No	Yes	No		1. Scram accumulator gas pressure low 2. Scram accumulator leakage high
Scram inlet piping	–	Yes	Yes	No		–
Internal drive housing supports	–	–	Yes	No		–
FMCRD magnetic coupling	FMCRD	–	Yes	No		–
FMCRD ball check valves	FMCRD	–	Yes	No		–
HCU charging water supply line check valve	HCU	Yes	Yes	No		–
HCU purge water supply line check valve	HCU	Yes	Yes	No		–
High pressure makeup isolation valves	HP CRD Isolation valves	Yes	Yes	No		–

Table 2.2.2-5

Control Rod Drive System Mechanical Equipment

Equipment Name (Description)	Equipment Identifier See Figure 2.2.2-1	ASME Code Section III	Seismic Cat. I	RCPB Component	(Deleted)	MCR Alarms
High pressure makeup isolation bypass valves (not including valve operator)	HP CRD Isolation Bypass valves	Yes	Yes	No		–

Table 2.2.2-6

Control Rod Drive System Electrical Equipment

Equipment Name (Description)	Equipment Identifier See Figure 2.2.2-1	Control Q-DCIS/DPS See Note 1	Seismic Category I	Safety-Related	Safety-Related Display	(Deleted)	Loss of Motive Power Position	Remotely Operated Valve
HCU scram solenoid pilot valves	SSPV	Yes	Yes	Yes	Associated scram valve position status		Vent HCU scram valve	By RPS system logic
FMCRD passive holding brakes	FMCRD	No	Yes	Yes	Yes		Apply brake	-
Scram accumulator charging water header pressure transmitters	Div 1-4	Yes	Yes	Yes	MCR alarm		-	-
FMCRD separation switches	FMCRD	Yes	Yes	Yes	MCR alarm		-	-
High pressure makeup isolation valves	HP CRD Isolation valves	Yes	Yes	Yes	MCR valve position		Close	Yes
High pressure makeup isolation bypass valves (not including valve operator)	HP CRD Isolation Bypass valves	Yes	Yes	Yes	MCR valve position		As-Is	Yes

Table 2.2.2-6

Control Rod Drive System Electrical Equipment

Equipment Name (Description)	Equipment Identifier See Figure 2.2.2-1	Control Q-DCIS/DPS See Note 1	Seismic Category I	Safety-Related	Safety-Related Display	(Deleted)	Loss of Motive Power Position	Remotely Operated Valve
Backup scram valve solenoids	Backup scram valves	Yes	Yes	Yes	Associated scram valve position status		As-Is	By RPS system logic

NOTE 1: See Tables 2.2.2-3, 2.2.2-4, and 2.2.2-5 for control functions and initiating conditions.

Table 2.2.2-7

ITAAC For The Control Rod Drive System

Design Commitment	Inspections, Tests, Analyses	Acceptance Criteria
1. The functional arrangement of the CRD System comprises three major functional groups: fine motion control rod drive (FMCRD), hydraulic control unit (HCU), and CRD hydraulic subsystem, as described in Subsection 2.2.2 and Table 2.2.2-1 and as shown in Figure 2.2.2-1.	Inspection(s) of the as-built CRD system will be conducted.	The CRD system conforms to the functional arrangement as described in Subsection 2.2.2 and Table 2.2.2-1 and as shown in Figure 2.2.2-1.
2a1. The components identified in Table 2.2.2-5 as ASME Code Section III are designed in accordance with ASME Code Section III requirements	Inspection of ASME Code Design Reports (NCA-3550) and required documents will be conducted.	ASME Code Design Reports (NCA-3550) (certified, when required by ASME Code) exist and conclude that the design of the components identified in Table 2.2.2-5 as ASME Code Section III complies with the requirements of ASME Code Section III including those stresses applicable to loads related to fatigue (including environmental effects), thermal expansion, seismic, and combined.

Table 2.2.2-7

ITAAC For The Control Rod Drive System

Design Commitment	Inspections, Tests, Analyses	Acceptance Criteria
2a2. The components identified in Table 2.2.2-5 as ASME Code Section III shall be reconciled with the design requirements.	A reconciliation analysis of the components identified in Table 2.2.2-5 as ASME Code Section III using as-designed and as-built information and ASME Code Design Reports (NCA-3550) will be performed.	ASME Code Design Report(s) (NCA-3550) (certified, when required by ASME Code) exist and conclude that design reconciliation has been completed, in accordance with ASME Code, for as-built reconciliation of the components identified in Table 2.2.2-5 as ASME Code Section III. The report documents the results of the reconciliation analysis.
2a3. The components identified in Table 2.2.2-5 as ASME Code Section III are fabricated, installed, and inspected in accordance with ASME Code Section III requirements.	Inspection of the components identified in Table 2.2.2-5 as ASME Code Section III will be conducted.	ASME Code Data Report(s) (including N-5 Data Reports, where applicable) (certified, when required by ASME Code) and inspection reports exist and conclude that the components identified in Table 2.2.2-5 as ASME Code Section III are fabricated, installed, and inspected in accordance with ASME Code Section III requirements.

Table 2.2.2-7

ITAAC For The Control Rod Drive System

Design Commitment	Inspections, Tests, Analyses	Acceptance Criteria
2b1. The piping identified in Table 2.2.5-5 as ASME Code Section III is designed in accordance with ASME Code Section III requirements.	Inspection of ASME Code Design Reports (NCA-3550) and required documents will be conducted. {{Design Acceptance Criteria}}	ASME Code Design Report(s) (NCA-3550) (certified, when required by ASME Code) exist and conclude that the design of the piping identified in Table 2.2.2-5 as ASME Code Section III complies with the requirements of ASME Code Section III, including those stresses applicable to loads related to fatigue (including environmental effects), thermal expansion, seismic, and combined. {{Design Acceptance Criteria}}
2b2. The as-built piping identified in Table 2.2.2-5 as ASME Code Section III shall be reconciled with the piping design requirements.	A reconciliation analysis of the piping identified in Table 2.2.2-5 as ASME Code Section III using as-designed and as-built information and ASME Code Design Reports (NCA-3550) will be performed.	ASME Code Design Report(s) (NCA-3550) (certified, when required by ASME Code) exist and conclude that design reconciliation has been completed, in accordance with ASME Code, for as-built reconciliation of the piping identified in Table 2.2.2-5 as ASME Code Section III. The report documents the results of the reconciliation analysis.

Table 2.2.2-7

ITAAC For The Control Rod Drive System

Design Commitment	Inspections, Tests, Analyses	Acceptance Criteria
2b3. The piping identified in Table 2.2.2-5 as ASME Code Section III is fabricated, installed, and inspected in accordance with ASME Code Section III requirements.	A reconciliation analysis of the piping identified in Table 2.2.2-5 as ASME Code Section III using as-designed and as-built information and ASME Code Design Reports (NCA-3550) will be performed.	ASME Code Design Report(s) (NCA-3550) (certified, when required by ASME Code) exist and conclude that design reconciliation has been completed, in accordance with ASME Code, for as-built reconciliation of the piping identified in Table 2.2.2-5 as ASME Code Section III. The report documents the results of the reconciliation analysis.
3a. Pressure boundary welds in components identified in Table 2.2.2-5 as ASME Code Section III meet ASME Code Section III non-destructive examination requirements.	Inspection of the as-built pressure boundary welds in components identified in Table 2.2.2-5 as ASME Code Section III will be performed in accordance with ASME Code Section III.	ASME Code report(s) exist and conclude that ASME Code Section III requirements are met for non-destructive examination of pressure boundary welds in components identified in Table 2.2.2-5 as ASME Code Section III.
3b. Pressure boundary welds in piping identified in Table 2.2.2-5 as ASME Code Section III meet ASME Code Section III non-destructive examination requirements.	Inspection of the as-built pressure boundary welds in piping identified in Table 2.2.2-5 as ASME Code Section III will be performed in accordance with ASME Code Section III.	ASME Code report(s) exist and conclude that ASME Code Section III requirements are met for non-destructive examination of pressure boundary welds in piping identified in Table 2.2.2-5 as ASME Code Section III.
4a. The components identified in Table 2.2.2-5 as ASME Code Section III retain their pressure boundary integrity at their design pressure.	A hydrostatic test will be conducted on those code components identified in Table 2.2.2-5 as ASME Code Section III that are required to be hydrostatically tested by ASME Code Section III.	ASME Code Data Report(s) exist and conclude that the results of the hydrostatic test of components identified in Table 2.2.2-5 as ASME Code Section III comply with the requirements of ASME Code Section III.

Table 2.2.2-7

ITAAC For The Control Rod Drive System

Design Commitment	Inspections, Tests, Analyses	Acceptance Criteria
4b. The piping identified in Table 2.2.2-5 as ASME Code Section III retains its pressure boundary integrity at its design pressure.	A hydrostatic test will be conducted on the code piping identified in Table 2.2.2-5 as ASME Code Section III that is required to be hydrostatically tested by ASME Code Section III.	ASME Code Data Report(s) exist and conclude that the results of the hydrostatic test of piping identified in Table 2.2.2-5 as ASME Code Section III comply with the requirements in ASME Code Section III.
5. The equipment identified in Table 2.2.2-5 and Table 2.2.2-6 as Seismic Category I can withstand Seismic Category I loads without loss of safety function.	i. Inspection will be performed to verify that the Seismic Category I equipment identified in Table 2.2.2-5 and Table 2.2.2-6 are located in a Seismic Category I structure.	i. The equipment identified as Seismic Category I in Table 2.2.2-5 and Table 2.2.2-6 is located in a Seismic Category I structure.
	ii. Type tests, analyses, or a combination of type tests and analyses, of equipment identified in Table 2.2.2-5 and Table 2.2.2-6 as Seismic Category I, will be performed using analytical assumptions, or will be performed under conditions which bound the Seismic Category I equipment design requirements.	ii. The equipment identified in Table 2.2.2-5 and Table 2.2.2-6 as Seismic Category I can withstand Seismic Category I loads without loss of safety function.
	iii. Inspections and analyses will be performed to verify that the as-built equipment identified in Table 2.2.2-5 and Table 2.2.2-6, including anchorage, is bounded by the testing or analyzed conditions.	iii. The as-built equipment identified in Table 2.2.2-5 and Table 2.2.2-6 as Seismic Category I, including anchorage, can withstand Seismic Category I loads without loss of safety function.

Table 2.2.2-7

ITAAC For The Control Rod Drive System

Design Commitment	Inspections, Tests, Analyses	Acceptance Criteria
6. The FMCRD is capable of positioning control rod incrementally and continuously over its entire range.	Type test(s) will be performed of the motor run-in and withdrawal function on the FMCRD using a simulated control rod.	The FMCRD is capable of positioning control rod incrementally and continuously over its entire range.
7. Valves defined in Table 2.2.2-5 and 2.2.2-6 open and close under differential pressure, fluid flow, and temperature conditions.	Tests of installed valves will be performed for opening and closing under system preoperational differential pressure, fluid flow, and temperature conditions.	Upon receipt of the actuating signal, each valve changes position under differential pressure, fluid flow, and temperature conditions.
8a. The CRD hydraulic subsystem has a high pressure makeup mode of operation that injects water to the RPV via the RWCU/SDC return path.	Test(s) of the CRD hydraulic subsystem high pressure makeup mode of operation will be conducted on the as-built system verifying that water is injected to the RPV via the RWCU/SDC return path.	The CRD hydraulic subsystem high pressure makeup mode of operation injects water to the RPV via the RWCU/SDC return path.
8b. The CRD hydraulic subsystem has a safety-related isolation capability terminating water injection into the RPV.	Test(s) of the CRD hydraulic subsystem high pressure makeup mode of operation will be conducted on the as-built system verifying that water injection is terminated to the RPV via the safety-related isolation.	The CRD hydraulic subsystem high pressure makeup mode of operation terminates water injection to the RPV via the safety-related isolation.
8c. The CRD hydraulic subsystem has an isolation bypass capability allowing water injection to the RPV.	Test(s) of the CRD hydraulic subsystem high pressure makeup mode of operation will be conducted on the as-built system verifying that water is injected to the RPV via the isolation bypass.	The CRD hydraulic subsystem high pressure makeup mode of operation injects water to the RPV via the isolation bypass.

Table 2.2.2-7

ITAAC For The Control Rod Drive System

Design Commitment	Inspections, Tests, Analyses	Acceptance Criteria
9. The PIP software project for the CRD system provides automatic functions, initiators, and associated interfacing systems as defined in Table 2.2.2-3.	Test(s) will be performed on the as-built system using simulated signals initiated from all of the associated interfacing as-built systems as defined in Table 2.2.2-3.	The PIP network segments for the CRD system are capable of performing the automatic functions defined in Table 2.2.2-3 using simulated signals initiated from all of the associated interfacing as-built systems as defined in Table 2.2.2-3.
10. The PIP software project for the CRD system provides controls and interlocks as defined in Table 2.2.2-4.	Test(s) will be performed on the as-built system using simulated signals.	The PIP network segments for the CRD system controls and interlocks exist, can be retrieved in the main control room, and perform in response to simulated signals and manual actions as defined in Table 2.2.2-4.
11. (Deleted)		
12. The CRD system provides rapid control rod insertion in response to a scram signal.	Test(s) will be performed of each CRD control rod pair scram function using simulated signals.	The scram insertion time for each control rod pair is less than or equal to the maximum allowable scram times as defined in Table 2.2.2-2.
13. (Deleted)		
14. (Deleted)		
15. The FMCRD has an electro-mechanical brake with a minimum required holding torque on the motor drive shaft.	Tests of each FMCRD brake will be conducted in a test facility	The FMCRD electro-mechanical brake has a minimum required holding torque of 49 N-m (36 ft-lbf) on the motor drive shaft.

Table 2.2.2-7

ITAAC For The Control Rod Drive System

Design Commitment	Inspections, Tests, Analyses	Acceptance Criteria
16a. Valves on lines attached to the RPV that require maintenance have maintenance valves such that freeze seals will not be required.	Inspections of piping design isometric drawings will be conducted. {{Design Acceptance Criteria}}	A review piping design isometric drawings, confirms that maintenance valves are included such that freeze seals will not be required. {{Design Acceptance Criteria}}
16b. The as-built location of valves on lines attached to the CRD system that require maintenance shall be reconciled to design requirements.	A reconciliation analysis of valves on lines attached to the RPV system that require maintenance using as-designed and as-built information will be performed.	Design reconciliation has been completed for the as-built location of valves relative to the design requirements. A report documents the results of the reconciliation analysis.
17. HP CRD makeup water isolation valves are normally open and close on a signal to close and on loss of air.	Tests of the as-built HP CRD makeup water isolation valves will be performed	The as-built HP CRD makeup water isolation valves are normally open and close on a signal to close and on loss of air.
18. HP CRD makeup water isolation bypass valves are normally closed and open on a signal to open.	Tests of the as-built HP CRD makeup water isolation bypass valves will be performed.	The as-built HP CRD makeup water isolation bypass valves are normally closed and open on a signal to open.
19. FMCRDs have continuous control rod position indication sensors that detect control rod position based on motor rotation.	Test(s) will be performed on the FMCRD continuous control rod position indication sensors by simulating motor run-in of each control rod.	FMCRDs have continuous control rod position indication in the MCR based on motor rotation.
20. FMCRDs have scram position indication switches that detect intermediate and scram completion control rod positions.	Test(s) will be performed on the FMCRD scram position indication switches by simulating motor run-in of each control rod.	FMCRDs have scram position indication in the MCR for intermediate and scram completion control rod positions.

Table 2.2.2-7

ITAAC For The Control Rod Drive System

Design Commitment	Inspections, Tests, Analyses	Acceptance Criteria
21. FMCRDs have a bayonet control rod coupling mechanism that requires a minimum rotation to decouple.	Test(s) will be performed on each FMCRD control rod coupling mechanism.	After being rotated at least one-eighth turn the control rod coupling mechanism uncouples the FMCRD from the control rod.
22. FMCRDs have spring-loaded latches in the hollow piston that engage slots in the guide tube to prevent rotation of the bayonet coupling except at predefined positions.	Type test(s) will be performed on the FMCRD latches by rotating the bayonet coupling.	The FMCRD bayonet coupling rotates less than one-eighth turn when the spring-loaded latches in the hollow piston are engaged in slots in the guide tube.
23. FMCRDs have safety-related redundant rod separation switches that detect separation of the FMCRD from the control rod.	Test(s) will be performed on each FMCRD safety-related rod separation switch.	Each redundant safety-related rod separation switch detects separation of the FMCRD from the control rod and indicates the separation status in the MCR.
24. Each FMCRD has a magnetic coupling that connects the associated drive motor to the drive shaft through the associated CRD housing.	Type test(s) will be performed on the FMCRD magnetic coupling.	For each FMCRD, the associated drive motor that is outside the CRD housing rotates the associated drive shaft that is inside the associated CRD housing up to the torque rating required for the FMCRD operation.
25. FMCRDs have safety-related scram inlet port check valves that are installed to close under reverse flow.	Inspection(s) will be performed of the as-built inlet port check valve installation.	Safety-related scram inlet port check valves are installed with normal flow direction going into the reactor.
26. HCU scram pilot solenoid valves transfer open to vent on loss of power to both solenoids.	Test(s) will be performed on each HCU scram pilot solenoid valve.	Each HCU scram pilot solenoid valve transfers open to vent on loss of power to both solenoids.

Table 2.2.2-7

ITAAC For The Control Rod Drive System

Design Commitment	Inspections, Tests, Analyses	Acceptance Criteria
27. Backup scram solenoid valves are closed on loss of power and transfer open to vent when energized.	Test(s) will be performed on each backup scram solenoid valve.	Each backup scram solenoid valve closes on loss of power and transfers open to vent when energized.
28. ARI valves are closed on loss of power and transfer open to vent when energized.	Test(s) will be performed on each ARI valve.	Each ARI valve closes on loss of power and transfers open to vent when energized.
29. Each HCU contains a nitrogen-water scram accumulator that can be charged to a sufficiently high pressure and with the necessary valves and components to fully insert two CRs.	Test(s) will be performed on each HCU and control rod pair, as applicable, with the reactor unpressurized, using simulated scram signals.	With each accumulator fully charged, each HCU fully inserts both control rod in the pair as applicable.
30. Scram accumulators are continuously monitored for water leakage by level instruments.	Test(s) will be performed on the level instruments in each scram accumulator.	Low scram accumulator water level is detected by each level instrument and is indicated in the MCR.
31. Divisional safety-related power supplies power safety-related FMCRD and HCU equipment.	Test(s) will be performed on the as-built system by providing a test signal in only one divisional safety-related power supply at a time.	A test signal exists only in the FMCRD and HCU equipment powered by the divisional power supply under test.

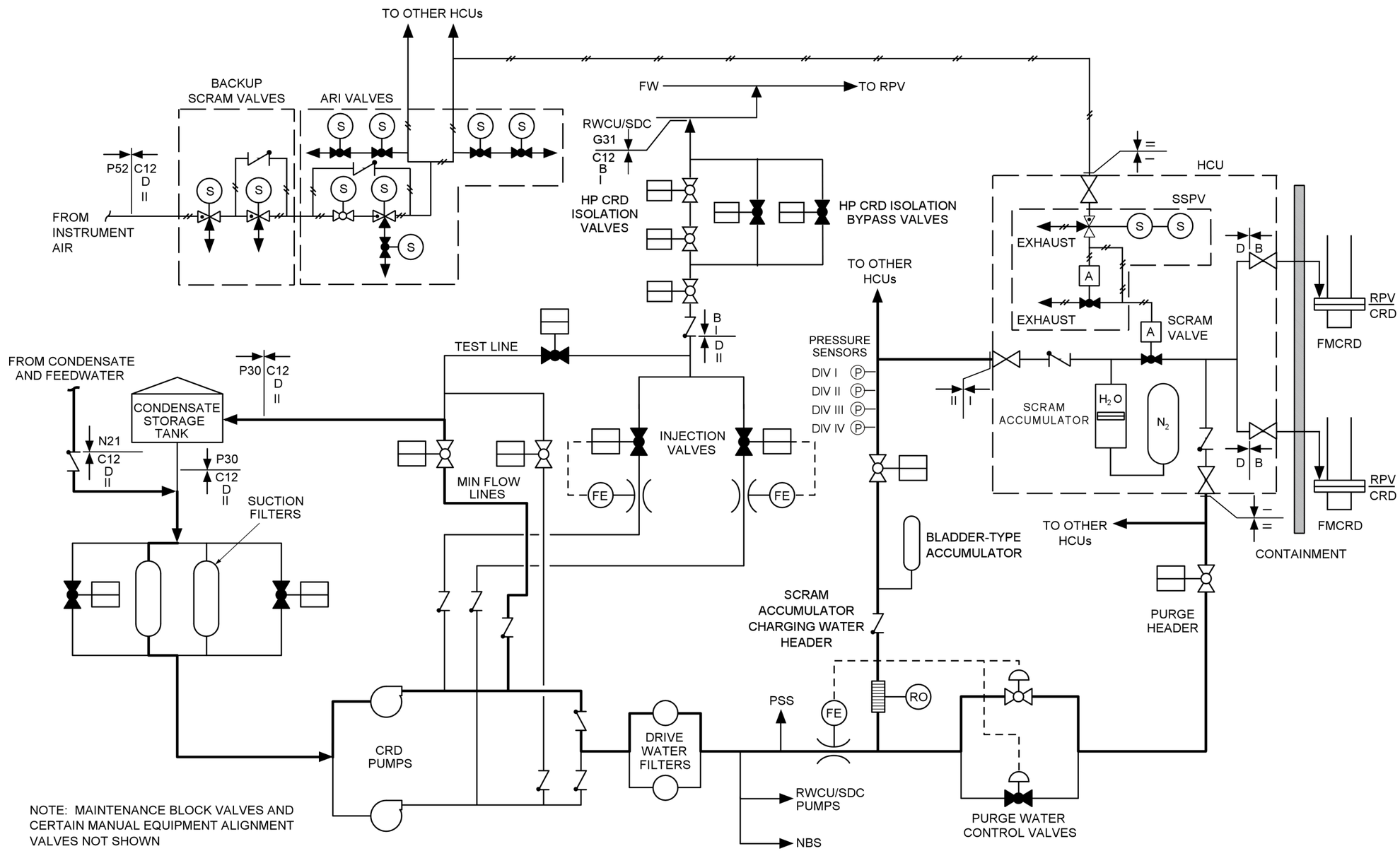

Figure 2.2.2-1. Control Rod Drive System

2.2.3 Feedwater Control System

Design Description

The Feedwater Control System (FWCS), automatically or manually, controls RPV water level by modulating the supply of feedwater flow to the RPV, the low flow control valve (LFCV), individual reactor feed pump Adjustable Speed Drive (ASD), or the RWCU/SDC system overboard control valve (OBCV).

The FWCS changes reactor power by automatically or manually controlling FW temperature by modulating the seventh FW heater steam heating valves or the high-pressure FW heater bypass valves.

FWCS alarms, displays, controls and status indications in the MCR are addressed by Section 3.3.

(1) FWCS functional arrangement is described in Subsection 2.2.3 and Table 2.2.3-1.

(2) FWCS provides automatic functions and initiators as described in Table 2.2.3-2.

(3) FWCS provides controls as described in Table 2.2.3-3.

(4) (Deleted)

(5) FWCS controllers are triple redundant fault tolerant.

Inspections, Tests, Analyses, and Acceptance Criteria

Table 2.2.3-4 defines the inspections, tests, and analyses, together with associated acceptance criteria for the FWCS.

Table 2.2.3-1

FWCS Functional Arrangement

FWCS is located in the Control Building, Reactor Building, and Turbine Building.

Table 2.2.3-2

FWCS Automatic Functions, Initiators, and Associated Interfacing Systems

Functions	Initiators	Interfacing System
Perform FW runback	RPV water level high (Level 8)	NBS
Reduce speed of other FW pumps	FW flow high on one FW pump run-out	-
Start standby reactor feed pump	Reactor feed pump trip	-
Open the steamline condensate drain valves	Steam flow less than predefined value of rated flow	-
Perform FW runback and close the LFCV and the RWCU/SDC overboard flow control valve	ATWS trip signal	DPS
One-way block high-pressure FW heater bypass valves	ATLM issues high-pressure FW heater bypass valves one-way block signal	RC&IS
One-way block seventh FW heater steam heating valves	ATLM issues seventh FW heater steam heating valves one-way block signal	RC&IS

Table 2.2.3-3

FWCS Controls

Parameter	Description
RPV Level Control	Manual speed control (reactor feed pump) Manual start/stop (reactor feed pump) Automatic / manual mode (reactor feed pump control) Manual control (high pressure FW heater string bypass valves and isolation valves) Automatic Control Modes: • Single element control: (enable at predefined value below rated reactor power) RPV water level: - Modulate either the low flow control valve (LFCV) or individual reactor feed pump ASD. - Modulate RWCU/SDC system overboard control valve (OBCV) • Three element control: (enable during normal power operation) Three process variables generate master feedwater flow demand signal (for output to individual reactor feed pump loop trim controller): - Total steam flow - Total FW flow - RPV water level Reactor feed pump loop trim controller output plus master feedwater flow controller output modulates individual reactor feed pump ASD: • Master FW flow demand signal • Individual reactor feed pump flow signals
FW Temperature Control	Manual mode: FW temperature setpoint set by operator Automatic mode: FW temperature setpoint is provided by PAS • Modulate FW heater No. 7 steam inlet valves • Modulate HP FW Heaters bypass valves

Table 2.2.3-4

ITAAC For The Feedwater Control System

Design Commitment	Inspections, Tests, Analyses	Acceptance Criteria
1. The FWCS functional arrangement is as described in Subsection 2.2.3 and Table 2.2.3-1.	Inspections of the as-built system will be performed.	The FWCS functional arrangement is as defined in Subsection 2.2.3 and Table 2.2.3-1.
2. FWCS provides automatic functions and initiators as described in Table 2.2.3-2.	Test(s) will be performed on the as-built system using simulated signals.	The system performs the functions defined in Table 2.2.3-2.
3. FWCS provides controls as defined in Table 2.2.3-3.	Test(s) will be performed on the as-built system using simulated signals and manual actions.	The FWCS controls and interlocks exist, can be retrieved in the main control room, and are performed in response to simulated signals and manual actions as defined in Table 2.2.3-3.
4. (Deleted)		

Table 2.2.3-4

ITAAC For The Feedwater Control System

Design Commitment	Inspections, Tests, Analyses	Acceptance Criteria
5. FWCS controllers are triple redundant and fault tolerant.	i. Test(s) will be performed simulating failure of each FWCS temperature controller. ii. Test(s) will be performed simulating failure of each FWCS level controller. iii. Test(s) will be performed simulating discrepancy between field voter output and the control signal actually sent to the ASDs. iv. Test(s) will be performed simulating discrepancy between field voter output and the control signal actually sent to the modulating steam admission valves.	i. Failure of any one FWCS temperature controller does not affect FWCS output. ii. Failure of any one FWCS level controller does not affect FWCS output. iii. “Lock-up” signal is sent to feed pump ASDs following discrepancy between field voter output and control signal actually sent. iv. “Lock-Up” signal is sent to the modulating steam admission valves of the seventh stage feedwater heater and the modulating heater bypass valves, following discrepancy between field voter output and control signal actually sent.

Figure 2.2.3-1. (Deleted)

2.2.4 Standby Liquid Control System

Design Description

The Standby Liquid Control (SLC) System is an alternative means to reduce core reactivity to ensure complete shutdown of the reactor core from the most reactive conditions at any time in core life, and provides makeup water to the RPV to mitigate the consequences of a Loss-of-Coolant-Accident (LOCA).

The SLC alarms, displays, and status indications in the MCR are addressed by Section 3.3.

Conformance with IEEE Std. 603 requirements by the safety-related control system structures, systems, or components defined in Tables 2.2.4-4 and 2.2.4-5 is addressed in Subsection 2.2.15.

The environmental qualification of SLC System components defined in Tables 2.2.4-4 and 2.2.4-5 are addressed in Section 3.8; and the environmental and seismic qualification of digital instrumentation and controls equipment is addressed in Section 3.8.

SLC software is developed in accordance with the software development program described in Section 3.2 as part of the ATWS/SLC software projects and SSLC/ESF software projects.

(1) The functional arrangement of the SLC System is as described in Subsection 2.2.4 and shown in Figure 2.2.4-1.

(2) The SLC System provides automatic functions and initiators are as defined in Table 2.2.4-2.

(3) The SLC System provides controls and interlocks as defined in Table 2.2.4-3.

(4) (Deleted)

(5) (Deleted)

(6) (Deleted)

(7) During an ATWS, the SLC System shall be capable of injecting borated water into the RPV at flow rates that assure rapid power reduction.

(8) The SLC System shall be capable of injecting borated water for use as makeup water to the RPV in response to a Loss-of-Coolant-Accident (LOCA).

(9) The redundant injection shut-off valves shown in Figure 2.2.4-1 as V1, V2, V3, and V4 are automatically closed by low accumulator level signals from the respective accumulator level monitors.

(10) a1. The components identified in Table 2.2.4-4 as ASME Code Section III are designed in accordance with ASME Code Section III requirements.

a2. The components identified in Table 2.2.4-4 as ASME Code Section III shall be reconciled with the design requirements.

a3. The components identified in Table 2.2.4-4 as ASME Code Section III are fabricated, installed, and inspected in accordance with ASME Code Section III requirements.

b1. The piping identified in Table 2.2.4-4 as ASME Code Section III is designed in accordance with ASME Code Section III requirements.

b2. The as-built piping identified in Table 2.2.4-4 as ASME Code Section III shall be reconciled with the piping design requirements.

b3. The piping identified in Table 2.2.4-4 as ASME Code Section III is fabricated, installed, and inspected in accordance with ASME Code Section III requirements.

(11) a. Pressure boundary welds in components identified in Table 2.2.4-4 as ASME Code Section III meet ASME Code Section III non-destructive examination requirements.

b. Pressure boundary welds in piping identified in Table 2.2.4-4 as ASME Code Section III meet ASME Code Section III non-destructive examination requirements.

(12) a. The components identified in Table 2.2.4-4 as ASME Code Section III retain their pressure boundary integrity at their design pressure.

b. The piping identified in Table 2.2.4-4 as ASME Code Section III retains its pressure boundary integrity at its design pressure.

(13) The equipment identified in Table 2.2.4-4 and Table 2.2.4-5 as Seismic Category I can withstand Seismic Category I loads without loss of safety function.

(14) (Deleted).

(15) Each of the SLC System divisions and safety-related loads/components identified in Tables 2.2.4-4 and 2.2.4-5 is powered from its respective safety-related division.

(16) In the SLC System, independence is provided between safety-related divisions, and between safety-related divisions and nonsafety-related equipment.

(17) a. Each mechanical train of the SLC System located outside the containment is physically separated from the other train(s) so as to preclude damage to both trains.

b. Each mechanical train of the SLC System located inside the containment is physically separated from the other train(s) so as to preclude damage to both trains.

(18) Re-positionable (not squib) valves listed in Table 2.2.4-4 open, close, or both open and close under differential pressure, fluid flow, and temperature conditions.

(19) The pneumatically operated valve(s) designated in Table 2.2.4-4 fail in the mode listed if either electric power to the valve actuating solenoid is lost, or pneumatic pressure to the valve(s) is lost.

(20) Check valves designated in Table 2.2.4-4 as having a safety-related function open and close under system pressure, fluid flow, and temperature conditions.

(21) The SLC System injection squib valve will open as designed.

(22) The equivalent natural boron concentration at cold shutdown conditions for the total solution injection volume is based on the liquid inventory in the RPV at the main steam line nozzle elevation plus the liquid inventory in the reactor shutdown cooling piping and equipment of the RWCU/SDC system.

(23) (Deleted)

(24) a. Valves on lines attached to the RPV that require maintenance have maintenance valves such that freeze seals will not be required.

b. The as-built location of valves on lines attached to the RPV in the SLC System that require maintenance shall be reconciled to design requirements.

(25) Each accumulator tank has an injectable liquid volume of at least 7.80 m^3 (2060 gal).

(26) Each accumulator tank has a cover gas volume above the liquid of at least 14.8 m^3 (523 ft^3).

(27) Each accumulator tank is capable of maintaining an initial nitrogen cover gas absolute pressure of least 14.82 MPa (2150 psia).

Inspections, Tests, Analyses, and Acceptance Criteria

Table 2.2.4-6 defines the inspections, tests, and analyses, together with associated acceptance criteria for the SLC system.

Table 2.2.4-1

(Deleted)

Table 2.2.4-2

SLC System Automatic Functions, Initiators, and Associated Interfacing Systems

Function	Initiator	Interfacing System
Open SLC injection valves	DPV Group 1 timer expired.	SSLC/ESF, NBS and DPS
	RPV pressure high and Startup Range Neutron Monitor (SRNM), i.e., the SRNM ATWS permissive, exist for specified time delay period.	NBS, NMS, and ATWS/SLC
	SRNM ATWS permissive and RPV water level low (L2) exist for specified time delay period.	NBS, NMS, and ATWS/SLC
	SRNM ATWS permissive and Manual ARI/FMCRD run-in signals exist for specified time delay period.	NBS, NMS, ATWS/SLC, and DPS
Close SLC accumulator shut-off valves	SLC accumulator level low following injection.	-

Table 2.2.4-3

SLC System Controls and Interlocks

Parameter	Description
Control	Manual initiation of SLC injection valves
Interlock	ATWS trip signal (from ATWS/SLC trip signal to open SLC injection squib valves) ECCS initiation signal (from SSLC/ESF to open SLC injection squib valves) RWCU/SDC isolation signal to LD&IS on SLC injection (from ATWS/SLC) ECCS initiation signal (from DPS to open SLC injection squib valves)

Table 2.2.4-4

SLC System Mechanical Equipment

Equipment Name (Description)	Equipment Identifier See Figure 2.2.4-1	ASME Code Section III	Seismic Cat. I	RCPB Component	Containment Isolation Valve	Remotely Operated	Loss of Motive Power Position	MCR Alarms
Train A Nitrogen Supply Line Check Valve	V-20	Yes	Yes	No	No	No	–	No
Train B Nitrogen Supply Line Check Valve	V-19	Yes	Yes	No	No	No	–	No
Train A Nitrogen Supply Isolation Valve	V-18	Yes	Yes	No	No	Yes	Closed	Note 1
Train A Accumulator	–	Yes	Yes	No	No	No	–	No
Train A Accumulator Relief Valve	V-22	Yes	Yes	No	No	No	–	No
Train B Nitrogen Supply Isolation Valve	V-15	Yes	Yes	No	No	Yes	Closed	Note 1
Train B Accumulator	–	Yes	Yes	No	No	No	–	No
Train B Accumulator Relief Valve	V-21	Yes	Yes	No	No	No	–	No
Train A Accumulator Vent Valve	V-17	Yes	Yes	No	No	Yes	Closed	Note 1

Table 2.2.4-4

SLC System Mechanical Equipment

Equipment Name (Description)	Equipment Identifier See Figure 2.2.4-1	ASME Code Section III	Seismic Cat. I	RCPB Component	Containment Isolation Valve	Remotely Operated	Loss of Motive Power Position	MCR Alarms
Train A Accumulator Vent Valve	V-16	Yes	Yes	No	No	Yes	Closed	Note 1
Train A Accumulator Vent Line Flow Restricting Orifice	–	Yes	Yes	No	No	–	–	No
Train B Accumulator Vent Valve	V-14	Yes	Yes	No	No	Yes	Closed	Note 1
Train B Accumulator Vent Valve	V-13	Yes	Yes	No	No	Yes	Closed	Note 1
Train B Accumulator Vent Line Flow Restricting Orifice	–	Yes	Yes	No	No	–	–	No
Train A Accumulator Shut-off Valve	V-3	Yes	Yes	No	No	Yes	Fail-as-is	Yes
Train A Accumulator Shut-off Valve	V-4	Yes	Yes	No	No	Yes	Fail-as-is	Yes

Table 2.2.4-4

SLC System Mechanical Equipment

Equipment Name (Description)	Equipment Identifier See Figure 2.2.4-1	ASME Code Section III	Seismic Cat. I	RCPB Component	Containment Isolation Valve	Remotely Operated	Loss of Motive Power Position	MCR Alarms
Train B Accumulator Shut-off Valve	V-1	Yes	Yes	No	No	Yes	Fail-as-is	Yes
Train B Accumulator Shut-off Valve	V-2	Yes	Yes	No	No	Yes	Fail-as-is	Yes
Train A Injection Squib Valve	V-7	Yes	Yes	Yes	Yes	Yes	Fail-as-is	Yes
Train A Injection Squib Valve	V-8	Yes	Yes	Yes	Yes	Yes	Fail-as-is	Yes
Train B Injection Squib Valve	V-5	Yes	Yes	Yes	Yes	Yes	Fail-as-is	Yes
Train B Injection Squib Valve	V-6	Yes	Yes	Yes	Yes	Yes	Fail-as-is	Yes
Train A Accumulator Injection Test/Vent Valve	V-24	Yes	Yes	Yes	No	No	–	No
Train B Accumulator Injection Test/Vent Valve	V-23	Yes	Yes	Yes	No	No	–	No
Train A Injection Check Valve	V-11	Yes	Yes	Yes	Yes	No	–	No

Table 2.2.4-4

SLC System Mechanical Equipment

Equipment Name (Description)	Equipment Identifier See Figure 2.2.4-1	ASME Code Section III	Seismic Cat. I	RCPB Component	Containment Isolation Valve	Remotely Operated	Loss of Motive Power Position	MCR Alarms
Train A Injection Check Valve	V-12	Yes	Yes	Yes	Yes	No	–	No
Train B Injection Check Valve	V-9	Yes	Yes	Yes	Yes	No	–	No
Train B Injection Check Valve	V-10	Yes	Yes	Yes	Yes	No	–	No
Train A Vessel Isolation Valve	V-26	Yes	Yes	Yes	No	No	–	No
Train B Vessel Isolation Valve	V-25	Yes	Yes	Yes	No	No	–	No
Main Mixing Pump Suction Isolation Valve	V-27	Yes	Yes	No	No	No	–	No
Main Mixing Pump Discharge Isolation Valve	V-28	Yes	Yes	No	No	No	–	No
Poison Solution Batch Mixing Isolation Valve	V-29	Yes	Yes	No	No	No	–	No

Table 2.2.4-4

SLC System Mechanical Equipment

Equipment Name (Description)	Equipment Identifier See Figure 2.2.4-1	ASME Code Section III	Seismic Cat. I	RCPB Component	Containment Isolation Valve	Remotely Operated	Loss of Motive Power Position	MCR Alarms
Train A piping from the locked open valve closest to the reactor vessel through the first non-seismic class break	–	Yes	Yes	No	No	No	–	No
Train B piping from the locked open valve closest to the reactor vessel through the first non-seismic class break	–	Yes	Yes	No	No	No	–	No

NOTE 1: Final determination of MCR Alarms will be based on Section 3.3.

Table 2.2.4-5

SLC System Electrical Equipment

Equipment Name (Description)	Equipment Identifier See Figure 2.2.4-1	Control Q-DCIS / DPS	Seismic Cat. I	Safety-Related	Safety-Related Display	Remotely Operated	Containment Isolation Valve Actuator
Train A Accumulator Pressure Sensor	PT	Yes	Yes	Yes	Yes	–	No
Train B Accumulator Pressure Sensor	PT	Yes	Yes	Yes	Yes	–	No
Train A Accumulator Level Sensor	LT	Yes	Yes	Yes	Yes	–	No
Train B Accumulator Level Sensor	LT	Yes	Yes	Yes	Yes	–	No
Train A Injection Squib Valve Initiator(s)	–	Yes Note 1	Yes	Yes	Yes	Yes	Yes
Train B Injection Squib Valve Initiator(s)	–	Yes Note 1	Yes	Yes	Yes	Yes	Yes
SLC Train A and Train B Logic Controllers	–	Yes	Yes	Yes	–	–	No

Table 2.2.4-5

SLC System Electrical Equipment

Equipment Name (Description)	Equipment Identifier See Figure 2.2.4-1	Control Q-DCIS / DPS	Seismic Cat. I	Safety-Related	Safety-Related Display	Remotely Operated	Containment Isolation Valve Actuator
Train A Nitrogen Supply Isolation Valve	V-18	No	Yes	No	Note 2	Yes	No
Train B Nitrogen Supply Isolation Valve	V-15	No	Yes	No	Note 2	Yes	No
Train A Accumulator Vent Valve	V-17	No	Yes	No	Note 2	Yes	No
Train A Accumulator Vent Valve	V-16	No	Yes	No	Note 2	Yes	No
Train B Accumulator Vent Valve	V-14	No	Yes	No	Note 2	Yes	No
Train B Accumulator Vent Valve	V-13	No	Yes	No	Note 2	Yes	No
Train A Accumulator Shutoff Valve	V-3	Yes	Yes	Yes	Yes	Yes	No
Train A Accumulator Shutoff Valve	V-4	Yes	Yes	Yes	Yes	Yes	No

Table 2.2.4-5

SLC System Electrical Equipment

Equipment Name (Description)	Equipment Identifier See Figure 2.2.4-1	Control Q-DCIS / DPS	Seismic Cat. I	Safety-Related	Safety-Related Display	Remotely Operated	Containment Isolation Valve Actuator
Train B Accumulator Shutoff Valve	V-1	Yes	Yes	Yes	Yes	Yes	No
Train B Accumulator Shutoff Valve	V-2	Yes	Yes	Yes	Yes	Yes	No
Train A Accumulator Temperature Indicator	TI	No	Yes	No	Note 2	–	No
Train B Accumulator Temperature Indicator	TI	No	Yes	No	Note 2	–	No

NOTE 1: Squib valve initiators allow independent SLC injection from different safety-related divisions or DPS

NOTE 2: Final determination of safety-related display will be based on Section 3.3.

Table 2.2.4-6

ITAAC For The Standby Liquid Control System

Design Commitment	Inspections, Tests, Analyses	Acceptance Criteria
1. The functional arrangement of the SLC system is as described in Subsection 2.2.4 and shown in Figure 2.2.4-1.	Inspection(s) of the as-built system will be performed.	The as-built system conforms to the functional arrangement described in Subsection 2.2.4 and shown in Figure 2.2.4-1.
2. The SLC System provides automatic functions and initiators are as defined in Table 2.2.4-2.	Test(s) will be performed on the as-built SLC system Train A and Train B Logic Controllers using simulated signals and actuators for the automatic functions defined in Table 2.2.4-2.	The SLC system Train A and Train B Logic Controllers are capable of performing the automatic functions described in Table 2.2.4-2.
3. The SLC system provides controls and interlocks as described in Table 2.2.4-3.	Test(s) will be performed on the as-built SLC system Train A and Train B Logic Controllers using simulated signals and actuators for the controls and interlocks defined in Table 2.2.4-3.	The SLC system Train A and Train B Logic Controllers controls and interlocks exist, can be retrieved in the main control room, and perform in response to simulated signals and manual actions as described in Table 2.2.4-3.
4. (Deleted)		
5. (Deleted)		
6. (Deleted)		

Table 2.2.4-6

ITAAC For The Standby Liquid Control System

Design Commitment	Inspections, Tests, Analyses	Acceptance Criteria
7. During an ATWS, the SLC system shall be capable of injecting borated water into the RPV at flow rates that assure rapid power reduction.	Tests are conducted to measure injection time of the as-built SLC system by injecting demineralized water from both accumulators into the open RPV. The initial differential pressure (6.21 MPa) between the accumulators and the RPV are set to that expected at the beginning of an ATWS by adjusting the accumulator pressures. Analyses are performed to correlate test results to as-built SLC system performance during postulated ATWS conditions.	During an ATWS the as-built SLC system (both accumulators) injects borated water into the RPV within the following time frames: • The first 5.4 m^3 (190 ft^3)of solution injects in ≤ 196 seconds. • The first and second 5.4 m3 (190 ft^3)of solution injects in ≤ 519 seconds.
8. The SLC system shall be capable of injecting borated water for use as makeup water to the RPV in response to a Loss-of-Coolant-Accident (LOCA).	Tests are conducted with the as-built SLC system to measure the total volume of demineralized water injected from both accumulators into the open RPV. These tests utilize the continuation of the tests conducted in ITAAC #7. Analyses are performed to correlate test results to as-built SLC system performance during postulated actual LOCA conditions.	The as-built SLC system (both accumulators) injects a total volume of ≥15.6 m^3 (551 ft^3)of borated water in response to a postulated LOCA.
9. The redundant injection shut-off valves shown in Figure 2.2.4-1 as V1, V2, V3, and V4 are automatically closed by low accumulator level signals from their respective accumulator level monitors.	Test(s) will be performed using a simulated low accumulator level signal to close the injection shut-off valves V1, V2, V3, and V4.	The as-built injection shut-off valves identified in Figure 2.2.4-1 as V1, V2, V3, and V4 close upon receipt of a simulated low accumulator level signal

Table 2.2.4-6

ITAAC For The Standby Liquid Control System

Design Commitment	Inspections, Tests, Analyses	Acceptance Criteria
10a1. The components identified in Table 2.2.4-4 as ASME Code Section III are designed in accordance with ASME Code Section III requirements.	Inspection of ASME Code Design Reports (NCA-3550) and required documents will be conducted.	ASME Code Design Reports (NCA-3550) (certified, when required by ASME Code) exist and conclude that the design of the components identified in Table 2.2.4-4 as ASME Code Section III complies with the requirements of ASME Code Section III including those stresses applicable to loads related to fatigue (including environmental effects), thermal expansion, seismic, and combined.
10a2. The components identified in Table 2.2.4-4 as ASME Code Section III shall be reconciled with the design requirements.	A reconciliation analysis of the components identified in Table 2.2.4-4 as ASME Code Section III using as-designed and as-built information and ASME Code Design Reports (NCA-3550) will be performed.	ASME Code Design Report(s) (NCA-3550) (certified, when required by ASME Code) exist and conclude that design reconciliation has been completed, in accordance with ASME Code, for as-built reconciliation of the components identified in Table 2.2.4-4 as ASME Code Section III. The report documents the results of the reconciliation analysis.

Table 2.2.4-6

ITAAC For The Standby Liquid Control System

Design Commitment	Inspections, Tests, Analyses	Acceptance Criteria
10a3. The components identified in Table 2.2.4-4 as ASME Code Section III are fabricated, installed, and inspected in accordance with ASME Code Section III requirements.	Inspection of the components identified in Table 2.2.4-4 as ASME Code Section III will be conducted.	ASME Code Data Report(s) (including N-5 Data Reports, where applicable) (certified, when required by ASME Code) and inspection reports exist and conclude that the components identified in Table 2.2.4-4 as ASME Code Section III are fabricated, installed, and inspected in accordance with ASME Code Section III requirements.
10b1. The piping identified in Table 2.2.4-4 as ASME Code Section III is designed in accordance with ASME Code Section III requirements.	Inspection of ASME Code Design Reports (NCA-3550) and required documents will be conducted. {{Design Acceptance Criteria}}	ASME Code Design Report(s) (NCA-3550) (certified, when required by ASME Code) exist and conclude that the design of the piping identified in Table 2.2.4-4 as ASME Code Section III complies with the requirements of the ASME Code, Section III, including those stresses applicable to loads related to fatigue (including environmental effects), thermal expansion, seismic, and combined. {{Design Acceptance Criteria}}

Table 2.2.4-6

ITAAC For The Standby Liquid Control System

Design Commitment	Inspections, Tests, Analyses	Acceptance Criteria
10b2. The as-built piping identified in Table 2.2.4-4as ASME Code Section III shall be reconciled with the piping design requirements.	A reconciliation analysis of the piping identified in Table 2.2.4- as ASME Code Section III using as-designed and as-built information and ASME Code Design Reports (NCA-3550) will be performed.	ASME Code Design Report(s) (NCA-3550) (certified, when required by ASME Code) exist and conclude that design reconciliation has been completed, in accordance with ASME Code, for as-built reconciliation of the piping identified in Table 2.2.4 -4 as ASME Code Section III. The report documents the results of the reconciliation analysis.
10b3. The piping identified in Table 2.2.4-4 as ASME Code Section III is fabricated, installed, and inspected in accordance with ASME Code Section III requirements.	Inspections of the piping identified in Table 2.2.4-1 as ASME Code Section III will be conducted.	ASME Code Data Report(s) (certified, when required by ASME Code) and inspection reports (including N-5 Data Reports where applicable) exist and conclude that the piping identified in Table 2.2.4-1 as ASME Code Section III is fabricated, installed, and inspected in accordance with ASME Code Section III requirements.
11a. Pressure boundary welds in components identified in Table 2.2.4-4 as ASME Code Section III meet ASME Code Section III non-destructive examination requirements.	Inspection of the as-built pressure boundary welds in components identified in Table 2.2.4-4 as ASME Code Section III will be performed in accordance with ASME Code Section III.	ASME Code report(s) exist and conclude that ASME Code Section III requirements are met for non-destructive examination of pressure boundary welds in components identified in Table 2.2.4-4 as ASME Code Section III.

Table 2.2.4-6

ITAAC For The Standby Liquid Control System

Design Commitment	Inspections, Tests, Analyses	Acceptance Criteria
11b. Pressure boundary welds in piping identified in Table 2.2.4-4 as ASME Code Section III meet ASME Code Section III non-destructive examination requirements.	Inspection of the as-built pressure boundary welds in piping identified in Table 2.2.4-4 as ASME Code Section III will be performed in accordance with ASME Code Section III.	ASME Code report(s) exist and conclude that ASME Code Section III requirements are met for non-destructive examination of pressure boundary welds in piping identified in Table 2.2.4-4 as ASME Code Section III.
12a. The components identified in Table 2.2.4-4 as ASME Code Section III retain their pressure boundary integrity at their design pressure.	A hydrostatic test will be conducted on those code components identified in Table 2.2.4-4 as ASME Code Section III that are required to be hydrostatically tested by ASME Code Section III.	ASME Code Data Report(s) exist and conclude that the results of the hydrostatic test of components identified in Table 2.2.4-4 as ASME Code Section III comply with the requirements of ASME Code Section III.
12b. The piping identified in Table 2.2.4-4 as ASME Code Section III retains its pressure boundary integrity at its design pressure.	A hydrostatic test will be conducted on the code piping identified in Table 2.2.4-4 as ASME Code Section III that is required to be hydrostatically tested by ASME Code Section III.	ASME Code Data Report(s) exist and conclude that the results of the hydrostatic test of piping identified in Table 2.2.4-4 as ASME Code Section III comply with the requirements in ASME Code Section III.
13. The equipment identified in Tables 2.2.4-4 and Table 2.2.4-5 as Seismic Category I can withstand Seismic Category I loads without loss of safety function.	i. Inspection will be performed to verify that the Seismic Category I equipment identified in Table 2.2.4-54and Table 2.2.4-5 are located in a Seismic Category I structure.	i. The equipment identified as Seismic Category I in Table 2.2.4-4 and Table 2.2.4-5 is located in a Seismic Category I structure.

Table 2.2.4-6

ITAAC For The Standby Liquid Control System

Design Commitment	Inspections, Tests, Analyses	Acceptance Criteria
	ii. Type tests, analyses, or a combination of type tests and analyses, of equipment identified in Table 2.2.4-4 and Table 2.2.4-5 as Seismic Category I, will be performed using analytical assumptions, or will be performed under conditions which bound the Seismic Category I equipment design requirements.	ii. The equipment identified in Table 2.2.4-4 and Table 2.2.4-5 as Seismic Category I can withstand Seismic Category I loads without loss of safety function.
	iii. Inspections and analyses will be performed to verify that the as-built equipment identified in Table 2.2.4-4 and Table 2.2.4-5, including anchorage, is bounded by the testing or analyzed conditions.	iii. The as-built equipment identified in Table 2.2.4-4 and Table 2.2.4-5 as Seismic Category I, including anchorage, can withstand Seismic Category I loads without loss of safety function
14. (Deleted)		
15. Each of the SLC System divisions and safety-related loads/components identified in Tables 2.2.4-4 and 2.2.4-5 is powered from its respective safety-related division.	Testing will be performed on the SLC System by providing a test signal in only one safety-related division at a time.	A test signal exists in the safety-related division and at the equipment identified in Table 2.2.4-4 and Table 2.2.4-5 powered from the safety-related division under test in the SLC System.
16. In the SLC System, independence is provided between safety-related divisions, and between safety-related divisions and nonsafety-related equipment.	i. Tests will be performed on the SLC System by providing a test signal in only one safety-related division at a time.	i. The test signal exists only in the safety-related division under test in the System.

Table 2.2.4-6

ITAAC For The Standby Liquid Control System

Design Commitment	Inspections, Tests, Analyses	Acceptance Criteria
	ii. Inspection of the as-built safety-related divisions in the SLC System will be performed.	ii. For the as-built safety-related divisions in the SLC System: • Physical separation or electrical isolation exists between these safety-related divisions in accordance with RG 1.75. • Physical separation or electrical isolation exists between safety-related Divisions and nonsafety-related equipment in accordance with RG 1.75.
17a. Each mechanical train of the SLC System located outside the containment is physically separated from the other train(s) so as to preclude damage to both trains.	Inspections and analysis will be conducted for each of the SLC System mechanical trains located outside the containment.	Each mechanical train of SLC System located outside containment is protected against design basis events and their direct consequences by spatial separation, barriers, restraints, or enclosures so as to preclude damage to both trains.
17b. Each mechanical train of the SLC System located inside the containment is physically separated from the other train(s) so as to preclude damage to both trains.	Inspections and analysis will be conducted for each of the SLC System mechanical trains located inside the containment.	Each mechanical train of SLC System located inside containment is protected against design basis events and their direct consequences by spatial separation, barriers, restraints, or enclosures so as to preclude damage to both trains.

Table 2.2.4-6

ITAAC For The Standby Liquid Control System

Design Commitment	Inspections, Tests, Analyses	Acceptance Criteria
18. Re-positionable (not squib) valves listed in Table 2.2.4-4 open, close, or both open and close under differential pressure, fluid flow, and temperature conditions.	Tests of installed valves will be performed for opening, closing, or both opening and closing under system preoperational differential pressure, fluid flow, and temperature conditions.	Upon receipt of the actuating signal, each valve opens, closes, or both opens and closes, depending upon the valve's safety function.
19. The pneumatically operated valve(s) listed in Table 2.2.4-4 fail in the mode listed if either electric power to the valve actuating solenoid is lost, or pneumatic pressure to the valve(s) is lost.	Tests will be conducted on the as-built valve(s).	The pneumatically operated valve(s) identified in Table 2.2.4-4 fail in the listed mode when either electric power to the valve actuating solenoid is lost, or pneumatic pressure to the valve(s) is lost.
20. Check valves listed in Table 2.2.4-4 open and close under system pressure, fluid flow, and temperature conditions	Tests of installed valves for opening and closing will be conducted under system preoperational pressure, fluid flow, and temperature conditions.	Based on the direction of the differential pressure across the valve, each check valve opens and closes.
21. The SLC System injection squib valve opens as designed.	A vendor type test will be performed on a squib valve to open as designed.	Records of vendor type test conclude SLC injection squib valves used in the injection and equalization will open as designed.

Table 2.2.4-6

ITAAC For The Standby Liquid Control System

Design Commitment	Inspections, Tests, Analyses	Acceptance Criteria
22. The equivalent natural boron concentration at cold shutdown conditions for the total solution injection volume is based on the liquid inventory in the RPV at the main steam line nozzle elevation plus the liquid inventory in the reactor shutdown cooling piping and equipment of the RWCU/SDC system.	An analysis of the as-built system will be performed to determine the equivalent natural boron concentration at cold shutdown conditions for the total solution injection volume.	The equivalent natural boron concentration at cold shutdown conditions for the total solution injection volume is > 1100 ppm.
23. (Deleted)		
24a. Valves on lines attached to the RPV that require maintenance have maintenance valves such that freeze seals will not be required.	Inspections of piping design isometric drawings will be conducted. {{Design Acceptance Criteria}}	A review of piping design isometric drawings confirms that maintenance valves are included such that freeze seals will not be required. {{Design Acceptance Criteria}}
24b. The as-built location of valves on lines attached to the RPV in the SLC System that require maintenance shall be reconciled to design requirements.	A reconciliation evaluation of valves on lines attached to the RPV that require maintenance using as-designed and as-built information will be performed.	Design reconciliation has been completed for the as-built location of valves relative to the design requirements.
25. Each accumulator tank has an injectable liquid volume of at least 7.80 m^3 (2060 gal).	Analysis of each as-built accumulator tank will be performed.	Each accumulator tank has an injectable volume of at least 7.80 m^3 (2060 gal).
26. Each accumulator tank has a cover gas volume above the liquid of at least 14.8 m^3 (523 ft^3).	Analysis of each as-built accumulator tank will be performed.	Each accumulator tank has a cover gas volume above the liquid of at least 14.8 m^3 (523 ft^3).

Table 2.2.4-6

ITAAC For The Standby Liquid Control System

Design Commitment	Inspections, Tests, Analyses	Acceptance Criteria
27. Each accumulator tank is capable of maintaining an initial nitrogen cover gas absolute pressure of least 14.82 MPa (2150 psia).	Analysis of each as-built accumulator tank will be performed.	Each accumulator tank is capable of maintaining an initial nitrogen cover gas absolute pressure of least 14.82 MPa (2150 psia).

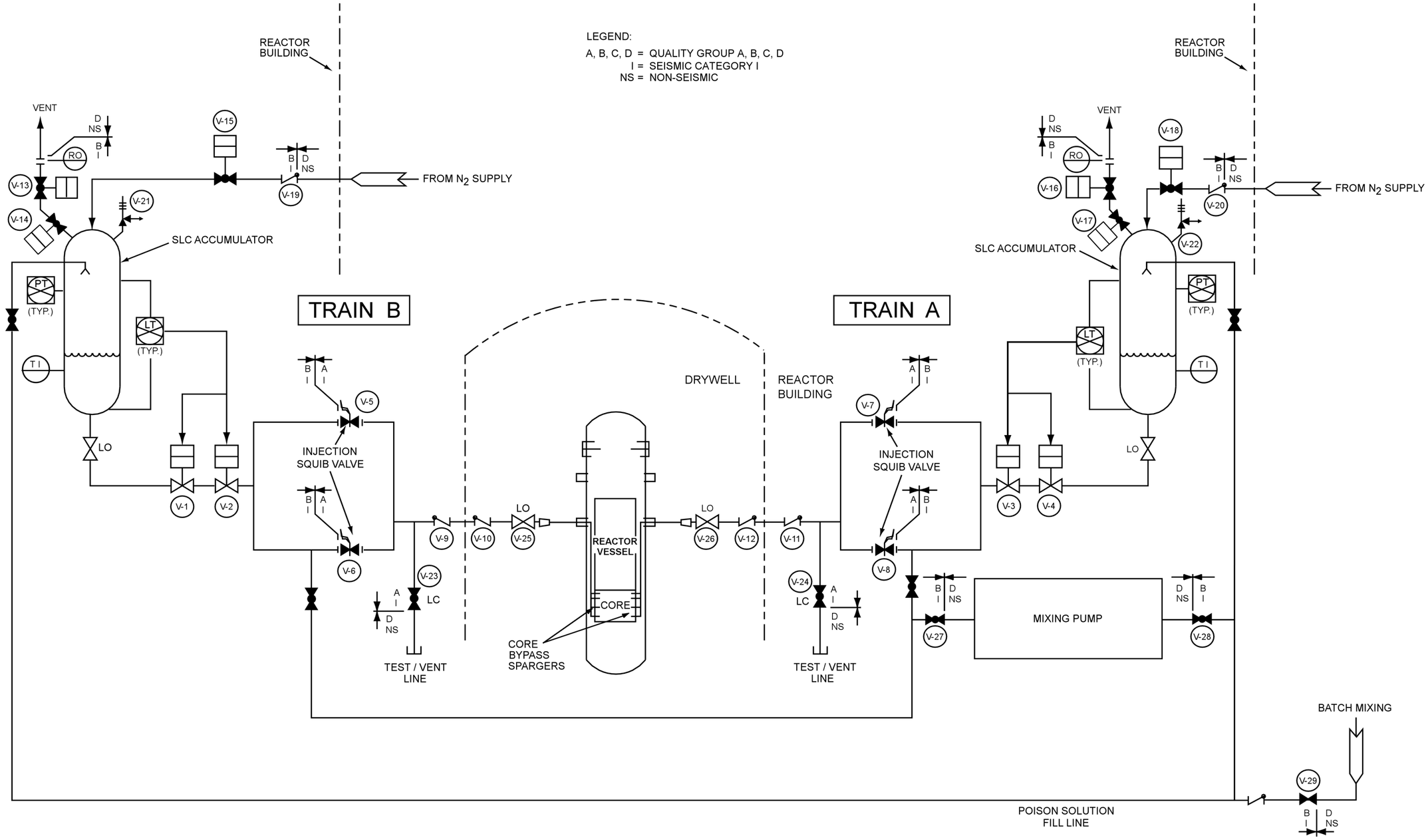

Figure 2.2.4-1. Standby Liquid Control System Simplified Diagram

2.2.5 Neutron Monitoring System

Design Description

The Neutron Monitoring System (NMS) monitors thermal neutron flux and supports the Reactor Protection System (RPS).

NMS alarms, displays, and status indications in the MCR are addressed by Section 3.3.

Conformance with IEEE Std. 603 requirements by the safety-related control system structures, systems, or components defined in Table 2.2.5-1 is addressed in Subsection 2.2.15.

The environmental and seismic qualification of NMS components defined in Table 2.2.5-1 is addressed in Section 3.8.

NMS software is developed in accordance with the software development program described in Section 3.2 as part of the NMS software projects.

(1) NMS functional arrangement is as described in Subsection 2.2.5 and Table 2.2.5-1.

(2) NMS provides automatic functions and initiators as defined in Table 2.2.5-2.

(3) NMS provides controls, interlocks, and bypasses as defined in Table 2.2.5-3.

(4) (Deleted)

(5) (Deleted)

(6) (Deleted)

(7) (Deleted)

(8) NMS divisions fail-safe to a trip condition on critical hardware failure, power failure, or loss of communication.

(9) The Startup Range Neutron Monitor (SRNM) subsystem monitors neutron flux from the source range to 15% of the reactor rated power.

(10) The Local Power Range Monitor (LPRM) subsystems monitor neutron flux from 1 % to 125 % of reactor rated power.

(11) Each NMS division is powered by its divisional safety-related uninterruptible power supply.

(12) LPRM provides signals that are proportional to the local neutron flux.

(13) The LPRM detector assemblies have a design pressure of 8.62 MPaG (1250 psig).

Inspections, Tests, Analyses, and Acceptance Criteria

Table 2.2.5-4 provides a definition of the inspections, tests, and analyses, together with associated acceptance criteria for the NMS.

Table 2.2.5-1

NMS Functional Arrangement

NMS comprises the safety-related SRNM subsystem and the power range neutron monitor (PRNM) subsystem; and the nonsafety-related automatic fixed in-core probe (AFIP) subsystem and multi-channel rod block monitor (MRBM) subsystem.
NMS is a four division, redundant, logic based system.
NMS controllers and their preamplifiers are located in divisionally separate rooms in the Control Building (CB) and Reactor Building (RB).
The PRNM subsystem comprises the local power range monitors (LPRM), the average power range monitors (APRM), and the oscillation power range monitors (OPRM).
The SRNM subsystem has 12 SRNM channels, each channel having one fixed in-core regenerative fission chamber sensor.
The LPRM detector assemblies, SRNM detector assemblies, wiring, cables, and connector are located in the lower DW in the RB.
LPRM subsystem comprises 64 assemblies, divided into four divisions, distributed uniformly throughout the core, each assembly having four uniformly spaced fixed in-core fission chamber detectors and seven AFIP sensors .

Table 2.2.5-2

NMS Functions, Initiators, and Associated Interfacing Systems

Function	Initiator	Interfacing System
SRNM Trip	SRNM short period	RPS
	SRNM upscale	RPS
	SRNM inoperable	RPS
	SRNM non-coincident upscale. A non-coincident SRNM trip with Reactor Mode Switch in SHUTDOWN, REFUEL, or STARTUP, position, the NMS Coincident/Non-coincident switch is in the NON-COINCIDENT position, and a single SRNM exceeds count setpoint.	RPS
PRNM Trip	APRM upscale flux	RPS
	APRM inoperative	RPS
	APRM upscale simulated reactor thermal power	RPS
	OPRM oscillation detection	DPS, RPS

Table 2.2.5-3

NMS Controls, Interlocks, and Bypasses

MCR Parameter	Description
Control	APRM Channel Bypass Control (one for each division) (hardware). SRNM Channel Bypass Controls (one for each bypass group) (hardware). MRBM Main Channel Bypass Coincident/Non-coincident switch
Interlock	APRM ATWS Permissive (for ATWS ADS inhibit (ATWS/SLC)) APRM Rod Block (RC&IS) Reactor Mode Switch (RPS) SRNM ATWS Permissive (ATWS/SLC) SRNM Rod Block (RC&IS) APRM Signal (RPS, RC&IS, DPS) SRNM Signal (RC&IS, DPS)
Bypass	MRBM Main Channel Bypass (one for each MRBM) APRM Channel Bypass Control (one for each division) SRNM Channel Bypass Controls (one for each bypass group)

Table 2.2.5-4

ITAAC For The Neutron Monitoring System

Design Commitment	Inspections, Tests, Analyses	Acceptance Criteria
1. NMS functional arrangement is as described in Subsection 2.2.5 and Table 2.2.5-1.	Inspection(s) of the as-built system will be performed	The system conforms to the functional arrangement as described in Subsection 2.2.5 and Table 2.2.5-1.
2. NMS provides automatic functions and initiators as described in Table 2.2.5-2.	Test(s) will be performed on the as-built NMS using simulated signals and actuators for the automatic functions defined in Table 2.2.5-2.	The NMS performs the automatic functions defined in Table 2.2.5-2.
3. NMS provides controls, interlocks, and bypasses as described in Table 2.2.5-3.	Test(s) will be performed on the as-built NMS and MCRP SSLC/ESF VDUs using simulated signals and actuators for the controls, interlocks, and bypasses defined in Table 2.2.5-3.	The NMS controls, interlocks and bypasses exist, can be retrieved in the main control room, and are performed in response to simulated signals and manual actions as defined in Table 2.2.5-3.
4. (Deleted)		
5. (Deleted)		
6. (Deleted)		
7. (Deleted)		
8. NMS divisions fail-safe to a trip condition on critical hardware failure, power failure, or loss of communication.	Test(s) will be performed using simulated signals.	The NMS divisions fail-safe to a trip condition on critical hardware failure, power failure, or loss of communication failure.

Table 2.2.5-4

ITAAC For The Neutron Monitoring System

Design Commitment	Inspections, Tests, Analyses	Acceptance Criteria
9. The Startup Range Neutron Monitor (SRNM) subsystem monitors neutron flux from the source range to 15% of the reactor rated power.	Test(s) will be performed using simulated signals.	The SRNM subsystem monitors neutron flux from the source range to 15% of the reactor rated power.
10. The Local Power Range Monitor (LPRM) subsystems monitor neutron flux from 1 % to 125 % of reactor rated power.	Test(s) will be performed using simulated signals.	The LPRM subsystems monitor neutron flux from 1 % to 125 % of reactor rated power.
11. Each NMS division is powered by its divisional safety-related uninterruptible power supply.	Test(s) will be performed on the NMS by providing a test signal in only one safety-related division at a time.	The test signal exists only in the safety-related division under test in the NMS.
12. LPRM provides signals that are proportional to the local neutron flux.	Test(s) will be performed on the NMS by providing test signals to each LPRM.	The test signal exists and can be retrieved in the MCR.
13. The LPRM detector assemblies have a design pressure of 8.62 MPaG (1250 psig).	Test(s) will be performed on each LPRM detector assembly.	The LPRM detector assembly withstands a pressure greater than 8.62 MPaG (1250 psig).

2.2.6 Remote Shutdown System

Design Description

The Remote Shutdown System (RSS) provides remote manual control of the systems necessary to: (a) perform a prompt shutdown (scram) of the reactor, (b) perform safe (hot) shutdown of the reactor after a scram, (c) perform subsequent cold shutdown of the reactor, and (d) monitor the reactor to ensure safe conditions are maintained during and following a reactor shutdown.

RSS alarms, displays, controls, and status indications are addressed by Section 3.3.

Conformance with IEEE Std. 603 requirements by the safety-related control system structures, systems, or components defined in Table 2.2.6-1 is addressed in Subsection 2.2.15.

The environmental and seismic qualification of RSS components defined in Table 2.2.6-1 is addressed in Section 3.8.

RSS software is developed in accordance with the software development program described in Section 3.2 as part of the reactor trip isolation function (RTIF) software projects and SSLC/ESF software projects.

(1) RSS functional arrangement is as described in Subsection 2.2.6 and Table 2.2.6-1.

(2) RSS provides dedicated controls as described in Table 2.2.6-2.

(3) (Deleted)

(4) (Deleted)

(5) (Deleted)

(6) (Deleted)

(7) Safety-related systems in each RSS panel receive power from divisionally separate safety-related uninterruptible power supplies.

(8) Nonsafety-related systems in each RSS panel receive power from nonsafety-related power supplies.

Inspections, Tests, Analyses, and Acceptance Criteria

Table 2.2.6-3 provides a definition of the inspections, tests, and analyses, together with associated acceptance criteria for the RSS.

Table 2.2.6-1

RSS Functional Arrangement

RSS is safety-related
RSS has two redundant, independent, panels located in two separate rooms in different divisional quadrants of the Reactor Building
RSS panels have a safety-related Division 1 Visual Display Unit (VDU), a safety-related Division 2 VDU, and nonsafety-related VDUs associated with the PIP A and PIP B network segments.

Table 2.2.6-2
RSS Controls

Division 1 Manual Scram Control
Division 2 Manual Scram Control
Division 1 Manual MSIV Isolation Control
Division 2 Manual MSIV Isolation Control
Safety-related Division 1 VDU
Safety-related Division 2 VDU
Nonsafety-related VDUs
Nonsafety-related Communications Equipment

Table 2.2.6-3

ITAAC For The Remote Shutdown System

Design Commitment	Inspections, Tests, Analyses	Acceptance Criteria
1. RSS functional arrangement is as described in Subsection 2.2.6 and Table 2.2.6-1.	Inspection(s) will be performed to confirm that the as-built RSS is configured as described in Subsection 2.2.6 and Table 2.2.6-1.	The as-built RSS is configured as described in Subsection 2.2.6 and Table 2.2.6-1.
2. RSS provides dedicated controls as described in Table 2.2.6-2.	Test(s) will be performed on the dedicated controls as described in Table 2.2.6-2.	The RSS panels are capable of issuing control signals from the dedicated controls described in Table 2.2.6-2.
3. (Deleted)		
4. (Deleted)		
5. (Deleted)		
6. (Deleted)		
7. Safety-related systems in each RSS panel receive power from divisionally separate safety-related uninterruptible power supplies.	Test(s) will be performed on the RSS by providing a test signal in only one safety-related division at a time.	The test signal exists only in the safety-related division under test in the RSS.
8. Nonsafety-related systems in each RSS panel receive power from nonsafety-related power supplies.	Test(s) will be performed on the RSS by providing a test signal in only one channel at a time.	Test signal exists from an uninterruptible AC power supply only in the channel under test.

2.2.7 Reactor Protection System

Design Description

The Reactor Protection System (RPS) initiates a reactor trip (scram) automatically whenever selected plant variables exceed preset limits or by manual operator action.

Conformance with IEEE Std. 603 requirements by the safety-related control system structures, systems, or components is addressed in Subsection 2.2.15.

RPS alarms, displays, and status indications in the MCR are addressed by Section 3.3.

The environmental and seismic qualification of RPS components is addressed in Section 3.8.

RPS software is developed in accordance with the software development program described in Section 3.2 as part of the RTIF software projects.

(1) RPS functional arrangement is as described in Subsection 2.2.7 and Table 2.2.7-1 and as shown on Figure 2.2.7-1.

(2) RPS provides automatic functions and initiators as described in Table 2.2.7-2.

(3) RPS provides controls, interlocks (system interfaces), and bypasses as described in Table 2.2.7-3.

(4) (Deleted)

(5) (Deleted)

(6) (Deleted)

(7) (Deleted)

(8) The RPS logic is designed to provide a trip initiation by requiring a coincident trip of like, unbypassed parameters in at least two divisions to cause the trip output.

(9) The RPS is fail-safe such that on loss of redundant divisional electrical power supplies the load drivers of that division change to the tripped state.

(10) Redundant safety-related power supplies are provided for each division of the RPS.

(11) Automatic and manual scram initiation logic systems are independent of each other.

(12) The RPS initiates a backup scram whenever an automatic scram is initiated in two-out-of four divisions or whenever a manual scram is initiated.

(13) The backup scram is not implemented through software.

Inspections, Tests, Analyses, and Acceptance Criteria

Table 2.2.7-4 provides a definition of the inspections, tests, and analyses, together with associated acceptance criteria, which will be performed for the RPS.

Table 2.2.7-1

RPS Functional Arrangement

The RPS comprises four redundant safety-related divisions of sensor channels, trip logics and trip actuators.
The RPS comprises two divisions of manual scram controls and scram logic circuitry.

Table 2.2.7-2

RPS Automatic Functions, Initiators, and Associated Interfacing Systems

Function	Initiator	Interfacing System
Reactor scram	NMS PRNM trip condition	NMS
	NMS SRNM trip condition	NMS
	Scram accumulator charging water header pressure – low-low	CRD
	Turbine stop valve closed position	-
	Turbine control valve control oil pressure low	-
	Condenser pressure high	-
	Power Generation Bus Loss (Loss of all feedwater flow event)	-
	MSIV closed position	NBS
	Reactor Pressure high	NBS
	RPV reactor level low (Level 3)	NBS
	RPV reactor level high (Level 8)	NBS
	DW pressure high	CMS
	Suppression pool average temperature high	CMS
	High simulated thermal power (feedwater temperature biased)	NBS, NMS
	Feedwater temperature exceeding allowable simulated thermal power vs. FW temperature domain.	NBS, NMS

Table 2.2.7-3

RPS Controls, Interlocks (System Interfaces), and Bypasses

Parameter	Description
Control	Manual divisional trip switches Manual scram trip switches Reactor Mode Switch Divisional actuator trip manual switches RPS trip reset manual switches RPS scram test switch (to RC&IS)
Interlock (System Interface)	RPS full scram condition (to RC&IS, CRD) Turbine bypass valves open position indication APRM Simulated Thermal Power (to NMS) Reactor Mode Switch positions: - RUN (to NMS, ICS, PAS, LD&IS) - STARTUP (to PAS, NMS) - SHUTDOWN (to CRDS) - REFUEL (to CRDS, PAS, NMS) Reactor Mode Switch in the SHUTDOWN position automatic bypass after a time delay Scram accumulator charging water header pressure signal (to RC&IS) MSIV closure bypass (to LD&IS)
Bypass	Special MSIV operational bypass switches Reactor Mode Switch in Shutdown scram manual bypass switches Scram accumulator charging water header pressure trip manual bypass switches (to RC&IS) MSIV closure trip signals manual bypass switches (to LD&IS) RPS division of logic (TLU output) manual divisional bypass switches RPS Division of sensors (DTM output) manual divisional bypass switches

Table 2.2.7-4

ITAAC For The Reactor Protection System

Design Commitment	Inspections, Tests, Analyses	Acceptance Criteria
1. RPS functional arrangement is as described in Subsection 2.2.7 and Table 2.2.7-1 and as shown on Figure 2.2.7-1.	Inspection(s), will be performed on the as-built RPS.	The RPS conforms to the functional arrangement as described in Subsection 2.2.7 and Table 2.2.7-1 and as shown in Figure 2.2.7-1.
2. RPS provides automatic functions and initiators as described in Table 2.2.7-2.	Test(s) will be performed on the as-built RPS using simulated signals and actuators for the automatic functions defined in Table 2.2.7-2.	RPS provides automatic functions, initiators and associated interfacing systems as described in Table 2.2.7-2.
3. RPS provides controls, interlocks (system interfaces), and bypasses as described in Table 2.2.7-3.	Test(s) will be performed on the as-built RPS and SSLC/ESF VDUs using simulated signals and actuators for the controls, interlocks (system interfaces), and bypasses described in Table 2.2.7-3.	The RPS controls and interlocks (system interfaces), and bypasses exist, can be retrieved in the main control room SSLC/ESF VDUs, and are performed in response to simulated signals and manual actions as described in Table 2.2.7-3.
4. (Deleted)		
5. (Deleted)		
6. (Deleted)		
7. (Deleted)		
8. The RPS logic is designed to provide a trip initiation by requiring a coincident trip of like, unbypassed parameters in at least two divisions to cause the trip output.	Test(s) of the RPS functions will be performed on the as-built RTIF platform of the RPS functions.	The RTIF platform performs the RPS function trip outputs when a coincident trip of like, unbypassed parameters in at least two divisions occurs.

Table 2.2.7-4

ITAAC For The Reactor Protection System

Design Commitment	Inspections, Tests, Analyses	Acceptance Criteria
9. The RPS is fail-safe such that on loss of redundant divisional electrical power supplies the load drivers of that division change to the tripped state.	Test(s) of the RPS functions will be performed on the as-built RTIF platform of the RPS functions by de-energizing the RTIF platform by division.	The RTIF platform de-energizes the RPS trip outputs when a coincident de-energization of at least two divisions occurs.
10. Redundant safety-related power supplies are provided for each division of the RPS.	Test(s) will be performed on the RPS by providing a test signal in only one safety-related division at a time.	The test signal exists only in the safety-related division under test in the RPS.
11. Automatic and manual scram initiation logic systems are independent of each other.	Analysis(es) will be performed on the automatic and manual scram initiation logic systems.	Single failures in an automatic scram initiation logic system do not propagate to the manual scram initiation logic system and single failures in a manual scram initiation logic system do not propagate to the automatic scram initiation logic system.
12. The RPS initiates a backup scram whenever an automatic scram is initiated in two-out-of four divisions or whenever a manual scram is initiated.	Test(s) will be performed on the as-built RTIF platform of the backup scram function.	The RTIF platform performs the backup scram outputs when either a coincident scram in at least two divisions or a manual scram occurs.
13. The backup scram is not implemented through software.	Analysis(es) and inspections will be performed on the backup scram circuitry.	No software is used to implement the backup scram function.

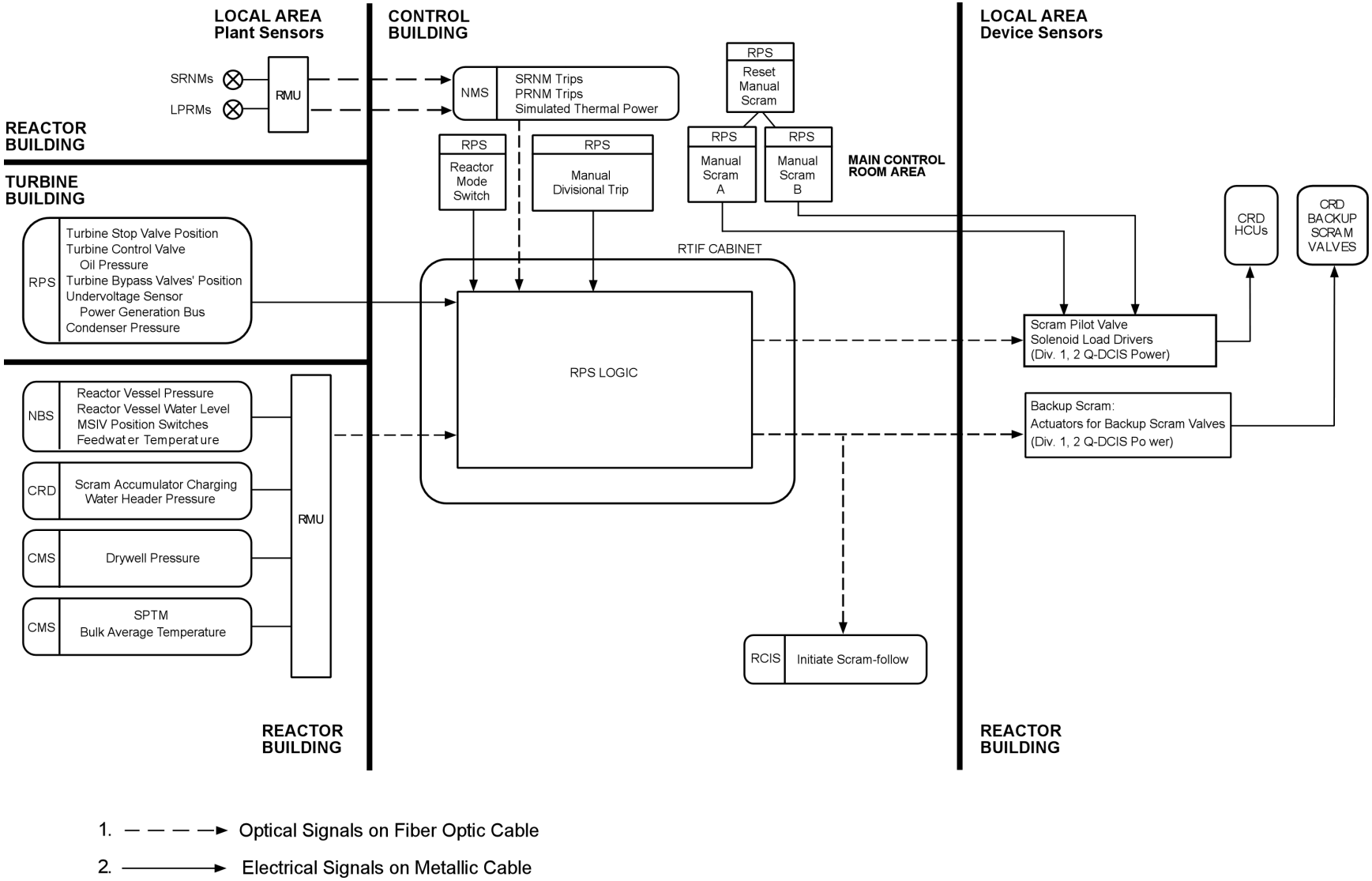

Figure 2.2.7-1. RPS Functional Arrangement

2.2.8 Plant Automation System

No ITAAC are required for this system.

2.2.9 Steam Bypass and Pressure Control System

Design Description

The Steam Bypass and Pressure Control (SB&PC) System, is a non-safety related system that controls the reactor pressure during reactor startup, power generation, and reactor shutdown by control of the turbine bypass valves and signals to the Turbine Generator Control System (TGCS), which controls the turbine control valves.

The SB&PC System alarms, displays, and status indications in the MCR are addressed by Section 3.3.

(1) The SB&PC System functional arrangement is as described in Subsection 2.2.9 and Table 2.2.9-1.

(2) The SB&PC System provides functions and initiating conditions as described in Table 2.2.9-2.

(3) (Deleted)

(4) SB&PC controllers are triple redundant fault tolerant.

(5) SB&PC System has three redundant nonsafety-related uninterruptible AC power supplies.

Inspections, Tests, Analyses, and Acceptance Criteria

Table 2.2.9-3 defines the inspections, tests, and analyses, together with associated acceptance criteria for the SB&PC system.

Table 2.2.9-1

SB&PC System Functional Arrangement

SB&PC System fault-tolerant digital controllers are located in the Control Building.
SB&PC System interfaces with Nuclear Boiler System (NBS) reactor steam dome pressure signals.
SB&PC System interfaces with the TGCS turbine power load unbalance signal, turbine trip signal, and turbine steam flow demand signal.
SB&PC System interfaces with the main condenser pressure signal.

Table 2.2.9-2

SB&PC System Functions and Initiating Conditions

Function	Initiating Condition
Close TBV	Main condenser pressure high
Modulate TBV	Normal pressure control function during normal operation

Table 2.2.9-3

ITAAC For The Steam Bypass and Pressure Control System

Design Commitment	Inspections, Tests, Analyses	Acceptance Criteria
1. The SB&PC System functional arrangement is as described in Subsection 2.2.9 and Table 2.2.9-1.	Inspections of the as-built SB&PC System will be conducted.	The as-built SB&PC System conforms to the functional arrangement as described in Subsection 2.2.9 and Table 2.2.9-1.
2. SB&PC System provides functions and initiating conditions as defined in Table 2.2.9-2.	Tests will be performed on the SB&PC System using simulated signals.	The SB&PC system performs the functions as described in Table 2.2.9-2.
3. (Deleted)		
4. SB&PC controllers are triple redundant fault tolerant.	i. Test(s) will be performed simulating failure of any one SB&PC controller. ii. Test(s) will be performed simulating failure of any two SB&PC controllers.	i. Failure of any one SB&PC controller has no effect on SB&PC valve position demand signal. ii. Failure of any two SB&PC controllers generates a turbine trip signal.

Table 2.2.9-3

ITAAC For The Steam Bypass and Pressure Control System

Design Commitment	Inspections, Tests, Analyses	Acceptance Criteria
5. SB&PC System has three redundant nonsafety-related uninterruptible AC power supplies.	i. Test(s) will be performed on the SB&PC system by providing a test signal in only one power supply channel at a time.	i. The test signal exists only in the power channel under test.
	ii. Test(s) will be performed on the SB&PC system power supply configuration simulating failure of any one power supply.	ii. Loss of any one power supply at a time has no effect on SB&PC valve position demand signal.
	iii. Test(s) will be performed on the SB&PC system power supply configuration simulating failure of any two power supplies.	iii. Loss of any two power supplies at a time has no effect on SB&PC valve position demand signal.

2.2.10 Safety-Related Distributed Control and Information System

Design Description

The Safety-Related Distributed Control and Information System (Q-DCIS) comprises the platforms that are defined in Table 2.2.10-1. These platforms comprise systems of integrated software and hardware elements. Q-DCIS platform software is developed in accordance with the software development program described in Section 3.2. Conformance with IEEE Standard 603 requirements by the Q-DCIS platforms is addressed in Subsection 2.2.15.

Inspections, Tests, Analyses, and Acceptance Criteria

Subsection 2.2.15 and Section 3.2 provide the inspections, tests, and analyses, together with associated acceptance criteria for the Q-DCIS platforms.

Table 2.2.10-1

Q-DCIS Platforms

Platform	Software projects
Reactor Trip & Isolation System Function Neutron Monitoring System (RTIF/NMS)	RTIF
	NMS
Safety System Logic & Control / Engineered Safety Features (SSLC/ESF) Platform	SSLC/ESF
Independent Control Platform (ICP)	Vacuum Breaker Isolation Function (VBIF)
	ATWS/SLC
	HP CRD Isolation Bypass Function

2.2.11 Nonsafety-Related Distributed Control and Information System

Design Description

The Nonsafety-Related Distributed Control and Information System (N-DCIS) is the designation given to the collection of hardware and software that comprise the nonsafety-related instrumentation, controls and monitoring systems or functions. A subset of the N-DCIS comprise the network segments that are described in Table 2.2.11-1. These network segments comprise systems of integrated software and hardware elements. N-DCIS network segment software is developed in accordance with the software development program described in Section 3.2.

Inspections, Tests, Analyses, and Acceptance Criteria

Section 3.2 provides the inspections, tests, and analyses, together with associated acceptance criteria for the N-DCIS network segments.

Table 2.2.11-1

N-DCIS Network Segments

GENE (DPS)	Supported Functions
PIP A and PIP B	FAPCS and Supporting Systems
	RCWU Suction Backup Isolation

2.2.12 Leak Detection and Isolation System

Design Description

The Leak Detection and Isolation System (LD&IS) detects and monitors leakage from the containment, and initiates closure of inboard and outboard main steamline isolation valves (MSIVs), containment isolation valves (CIVs), and Reactor Building (RB) isolation dampers by the safety-related reactor trip and isolation function (RTIF) and SSLC/ESF programmable logic controller software projects.

LD&IS MSIV isolation function is implemented by the RTIF platform.

Conformance with IEEE Std. 603 requirements by the safety-related control system structures, systems, or components is addressed in Subsection 2.2.15.

The environmental and seismic qualification of LD&IS components is addressed by Section 3.8.

The LD&IS alarms, displays, and status indications in the main control room are addressed in Section 3.3.

The containment isolation components that correspond to the isolation functions defined in Tables 2.2.12-2 and 2.2.12-3 are addressed in Subsection 2.15.1.

LD&IS software is developed in accordance with the software development program described in Section 3.2 as part of the RTIF software projects and SSLC/ESF software projects.

(1) (Deleted)

(2) a. RTIF LD&IS software monitors MSIV isolation function variables are as described in Table 2.2.12-2.

b. SSLC/ESF LD&IS software monitors isolation function variables as described in Table 2.2.12-2.

(3) RTIF and SSLC/ESF LD&IS software monitor leakage source variables as described in Table 2.2.12-3.

(4) RTIF and SSLC/ESF LD&IS software provide controls, interlocks, and bypasses as described in Table 2.2.12-4.

(5) (Deleted)

(6) (Deleted)

(7) (Deleted)

(8) (Deleted)

(9) (Deleted)

(10) LD&IS isolation functions logic is designed to provide an actuation by requiring coincident trip of like, unbypassed parameters in at least two divisions to cause the trip output.

(11) MSIV LD&IS logic is de-energized to initiate the isolation function (i.e., fail-safe).

(12) DW floor drain high conductivity waste (HCW) sump instrumentation is designed with the sensitivity to detect a leakage step-change (increase) within one hour and to alarm at excess sump flow rates.

Inspections, Tests, Analyses, and Acceptance Criteria

Table 2.2.12-5 specifies the inspections, tests, and analyses, together with associated acceptance criteria for the LD&IS.

Table 2.2.12-1
(Deleted)

Table 2.2.12-2

LD&IS Isolation Function Monitored Variables

Monitored Variables	LD&IS Isolation Platforms and Functions (1)											
	RTIF	SSLC/ESF										
	Main Steam & Drain Lines	RWCU/SDC Lines	ICS Lines	Fission Products Sampling Lines	DW LCW Sump Drain Line	DW HCW Sump Drain Line	Containment Purge & Vent Valves	CWS Lines to DW Air Coolers	FAPCS Process Lines	R /B HVAC Exhaust Ducts	HP CRD Makeup Water Injection Isolation	Feedwater Lines
RWCU/SDC Differential Mass Flow High	–	X	–	–	–	–	–	–	–	–	–	–
SLC Initiation Signal	–	X	–	–	–	–	–	–	–	–	–	–
Refueling Area Air Exhaust Radiation High	–	–	–	–	–	–	X	–	–	X	–	–
Reactor Building Air Exhaust Radiation High	–	–	–	–	–	–	X	–	–	X	–	–
Isolation Condenser Condensate Flow High	–	–	X	–	–	–	–	–	–	–	–	–
Isolation Condenser Steam Flow High	–	–	X	–	–	–	–	–	–	–	–	–
Drywell Pressure High	–	–	–	X	X	X	X	X	X	X	X(3)	X(2)(3)
Drywell Pressure High-High	–	–	–	–	–	–	–	–	–	–	–	X(4)

Table 2.2.12-2

LD&IS Isolation Function Monitored Variables

Monitored Variables	LD&IS Isolation Platforms and Functions (1)											
	RTIF	SSLC/ESF										
	Main Steam & Drain Lines	RWCU/SDC Lines	ICS Lines	Fission Products Sampling Lines	DW LCW Sump Drain Line	DW HCW Sump Drain Line	Containment Purge & Vent Valves	CWS Lines to DW Air Coolers	FAPCS Process Lines	R /B HVAC Exhaust Ducts	HP CRD Makeup Water Injection Isolation	Feedwater Lines
Main Condenser Vacuum Low	X	–	–	–	–	–	–	–	–	–	–	–
Turbine Area Ambient Temperature High	X	–	–	–	–	–	–	–	–	–	–	–
MSL Tunnel Ambient Temperature High	X	X	–	–	–	–	–	–	–	–	–	–
Isolation Condenser Vent Exhaust Radiation High	–	–	X	–	–	–	–	–	–	–	–	–
MSL Flow Rate High	X	–	–	–	–	–	–	–	–	–	–	–
MSL Pressure Low	X	–	–	–	–	–	–	–	–	–	–	–
Reactor Water Level Low (Level 1, Level 2)	X	X	–	X	X	X	X	X	X	X	–	–
Reactor Water Level High (Level 8)	–	–	–	–	–	–	–	–	–	–	–	X

Table 2.2.12-2

LD&IS Isolation Function Monitored Variables

Monitored Variables	LD&IS Isolation Platforms and Functions (1)											
	RTIF	SSLC/ESF										
	Main Steam & Drain Lines	RWCU/SDC Lines	ICS Lines	Fission Products Sampling Lines	DW LCW Sump Drain Line	DW HCW Sump Drain Line	Containment Purge & Vent Valves	CWS Lines to DW Air Coolers	FAPCS Process Lines	R /B HVAC Exhaust Ducts	HP CRD Makeup Water Injection Isolation	Feedwater Lines
Feedwater Lines Differential Pressure	–	–	–	–	–	–	–	–	–	–	–	X(2)
Drywell Water Level High	–	–	–	–	–	–	–	–	–	–	X(3)	X(3)
Reactor Water Level Low – Low L0.5	–	–	–	–	–	–	–	–	–	–	–	X
GDCS Pool Level Low	–	–	–	–	–	–	–	–	–	–	X	–

(1) "X" indicates that isolation signal is provided to perform the designated isolation function(s) for the listed monitored variable.
(2) Feedwater lines isolation signal is a high FW lines differential pressure coincident with high drywell pressure.
(3) Feedwater lines isolation signal and HP CRD makeup water injection isolation signal is Drywell Water Level High coincident with Drywell Pressure High.
(4) These lines have a third diverse, nonsafety-related valve for line isolation controlled by nonsafety-related DCIS, closing on the same signals as they safety-related isolation valves.

Table 2.2.12-3

LD&IS Leakage Source Monitored Variables

Monitored Variables(3)	Leakage Source (2)																			
	Main Steam-lines		IC Steam-lines		IC Conden-sate Lines		CWS Lines		FAPCS Lines		RWCU/ SDC Lines		Feed-water Lines		GDCS Water		Reactor Vessel Head Seal		Misc. Leaks	
Location (1)	I	O	I	O	I	O	I	O	I	O	I	O	I	O	I	O	I	O	I	O
Intersystem Leakage Radiation High	–	–	–	–	–	–	–	–	–	–	–	X	–	–	–	–	–	–	–	–
RWCU/SDC Differential Mass Flow High	–	–	–	–	–	–	–	–	–	–	–	X[4]	–	–	–	–	–	–	–	–
Equip. Areas Differential Temperature High	–	X	–	–	–	–	–	–	–	–	–	X	–	–	–	–	–	–	–	–
MSL Tunnel or Turbine Building Area Ambient Temperature High	–	X	–	–	–	–	–	–	–	–	–	X	–	X	–	–	–	–	–	X
MSL Flow High	X	X			–	–	–	–	–	–	–	–	–	–	–	–	–	–	–	–
Isolation Condenser Steamline Flow High	–	–	X	X	–	–	–	–	–	–	–	–	–	–	–	–	–	–	–	–
Isolation Condenser Condensate Return Flow High	–	–	–	–	X	X	–	–	–	–	–	–	–	–	–	–	–	–	–	–

Table 2.2.12-3

LD&IS Leakage Source Monitored Variables

Monitored Variables(3)	Leakage Source (2)																			
	Main Steam-lines		IC Steam-lines		IC Conden-sate Lines		CWS Lines		FAPCS Lines		RWCU/ SDC Lines		Feed-water Lines		GDCS Water		Reactor Vessel Head Seal		Misc. Leaks	
Location (1)	I	O	I	O	I	O	I	O	I	O	I	O	I	O	I	O	I	O	I	O
DW Air Cooler Cond. Flow High	X	–	X	–	–	–	X	–	X	–	X	–	X	–	X	–	–	–	X	–
Vessel Head Flange Seal Pressure High	–	–	–	–	–	–	–	–	–	–	–	–	–	–	–	–	X	–	–	–
RB Equip. / Floor Drain Sump Pump Activity	–	X	–	X	–	–	–	X	–	X	–	X	–	X	–	–	–	–	–	X
SRV and SV Discharge Line Temperature High	X	–	–	–	–	–	–	–	–	–	–	–	–	–	–	–	–	–	–	–
DW Temperature High	X	–	X	–	–	–	–	–	–	–	X	–	X	–	X	–	–	–	X	–
DW Fission Product Radiation High	X	–	X	–	X	–	–	–	–	–	X	–	X	–	–	–	–	–	–	–
DW Equip. Drain Sump Level Change High	–	–	–	–	–	–	–	–	–	–	–	–	–	–	–	–	X	–	X	–
DW Floor Drain Sump Level Change High	X	–	X	–	X	–	X	–	X	–	X	–	X	–	X	–	–	–	X	–
DW Pressure High	X	–	X	–	–	–	–	–	–	–	X	–	X	–	–	–	–	–	–	–

Table 2.2.12-3

LD&IS Leakage Source Monitored Variables

Monitored Variables(3)	Leakage Source (2)																			
	Main Steam-lines		IC Steam-lines		IC Conden-sate Lines		CWS Lines		FAPCS Lines		RWCU/ SDC Lines		Feed-water Lines		GDCS Water		Reactor Vessel Head Seal		Misc. Leaks	
Location (1)	I	O	I	O	I	O	I	O	I	O	I	O	I	O	I	O	I	O	I	O
RPV Water Level Low	X	X	X	X	X	X	–	–	–	–	X	X		–	–	–	–	–	–	–
Feedwater Lines Differential Pressure	–	–	–	–	–	–	–	–	–	–	–	–	X	X	–	–	–	–	–	–
Main Steamline Pressure Low	–	X	–	–	–	–	–	–	–	–	–	–	–	–	–	–	–	–	–	X
Main Condenser Vacuum Low	–	X	–	–	–	–	–	–	–	–	–	–	–	–	–	–	–	–	–	X
Drywell Water Level	–	–	–	–	X	–	X	–	X	–	X	–	X	–	X	–	–	–	X	–

(1) "I" means inside DW leakage; "O" means outside DW leakage.

(2) "X" means control/alarm is associated with the monitored variable; "–" means not applicable.

(3) Monitored Variables are listed with qualitative modifiers for the parameter trend of significance to leak detection only, and are no to be confused with variable setpoints that may use similar descriptive labeling.

(4) Non-safety related RWCU valve insolate using PIP logic.

Table 2.2.12-4

LD&IS Controls, Interlocks, and Bypasses

Parameter	Description
Control	Manual isolation (individually transfer open/close each CIV and MSIV) Manual reset (individually reset CIV and MSIV isolation logic to enable CIV and MSIV manual open function) MSIV test switches Isolation logic reset switches
Interlock	Reactor Mode Switch RPV water level low (Level 2) time delay (RTIF) RPV water level low (Level 2) time delay (SSLC/ESF) Turbine stop valve closed position RPV pressure DW pressure ADS Inhibit (ATWS/SLC)
Bypass	RTIF Division of sensors channel inputs to each division manual bypass switches RTIF Divisional actuator trip manual switches SSLC/ESF Division of sensors channel inputs to each manual bypass switch SSLC/ESF manual control bypasses (disables) the load driver/discrete output Feedwater Isolation Bypass (ADS Inhibit)

Table 2.2.12-5

ITAAC For The Leak Detection and Isolation System

Design Commitment	Inspections, Tests, Analyses	Acceptance Criteria
1. (Deleted)		
2a. RTIF LD&IS software monitors isolation MSIV function variables are as described in Table 2.2.12-2.	Test(s) will be performed on the as-built RTIF using simulated signals and actuators for the MSIV isolation functions as described in Table 2.2.12-2.	The RTIF performs the MSIV isolation functions as described in Table 2.2.12-2.
2b. SSLC/ESF LD&IS software monitors non-MSIV isolation function variables as described in Table 2.2.12-2.	Test(s) will be performed on the as-built SSLC/ESF using simulated signals and actuators for the non-MSIV isolation functions as described in Table 2.2.12-2.	The SSLC/ESF performs the non-MSIV isolation functions as described in Table 2.2.12-2.
3. RTIF and SSLC/ESF LD&IS software monitor leakage source variables as described in Table 2.2.12-3.	Test(s) will be performed on the as-built RTIF software projects, SSLC/ESF software projects, and SSLC/ESF VDUs using simulated signals and actuators for the monitored variables as described in Table 2.2.12-3.	The monitored variables exist and can be retrieved in the main control room in response to simulated signals as described in Table 2.2.12-3.
4. RTIF and SSLC/ESF LD&IS software provide controls, interlocks, and bypasses as described in Table 2.2.12-4.	Test(s) will be performed on the as-built RTIF software projects, and SSLC/ESF software projects, (including the SSLC/VDUs) using simulated signals and actuators for the controls, interlocks, and bypasses as described in Table 2.2.12-4.	The RTIF and SSLC/ESF controls, interlocks, and bypasses exist, can be retrieved in the main control room, and are performed in response to simulated signals and manual actions as described in Table 2.2.12-4.
5. (Deleted)		
6. (Deleted)		
7. (Deleted)		

Table 2.2.12-5

ITAAC For The Leak Detection and Isolation System

Design Commitment	Inspections, Tests, Analyses	Acceptance Criteria
8. (Deleted)		
9. (Deleted)		
10. LD&IS isolation functions logic is designed to provide an actuation by requiring coincident trip of like, unbypassed parameters in at least two divisions to cause the trip output.	Test(s) of the LD&IS functions will be performed on the as-built SSLC/ESF.	The SSLC/ESF performs the LD&IS function trip outputs when a coincident trip of like, unbypassed parameters in at least two divisions occurs.
11. MSIV LD&IS logic is de-energized to initiate the isolation function (i.e., fail-safe).	Test(s) will be performed on the as-built RTIF MSIV of the LD&IS functions by de-energizing the RTIF by division.	The RTIF de-energizes the MSIV LD&IS trip outputs when a coincident de-energization of at least two divisions occurs.
12. DW floor drain high conductivity waste (HCW) sump instrumentation is designed with the sensitivity to detect a leakage step-change (increase) within one hour and to alarm at excess sump flow rates.	Test(s) will be performed on the as-built DW floor drain high conductivity waste (HCW) sump instrumentation.	The DW floor drain high conductivity waste (HCW) sump instrumentation detects leakage step-changes (increases) of 3.8 liters/min (1.0 gpm) within one hour and alarms at sump flow rates in excess of 19 liters/min (5 gpm).

2.2.13 Engineered Safety Features Safety System Logic and Control

Design Description

The Safety System Logic and Control for the Engineered Safety Features systems (SSLC/ESF) addressed in this subsection performs the safety-related Emergency Core Cooling System (ECCS) control logic, the isolation logic for the Control Room Habitability System (CRHS), and controls the safety-related video display units (VDUs) for the Q-DCIS.

Conformance with IEEE Std. 603 requirements by the safety-related control system structures, systems, or components is addressed in Subsection 2.2.15.

The SSLC/ESF alarms, displays, and status indications in the MCR are addressed by Section 3.3.

The environmental and seismic qualification of SSLC/ESF components described in Table 2.2.13-1 is addressed in Section 3.8.

The SSLC/ESF software is developed in accordance with the software development program described in Section 3.2 as part of the SSLC/ESF software projects.

(1) The SSLC/ESF functional arrangement is as described in Subsection 2.2.13 and Table 2.2.13-1.

(2) The SSLC/ESF provides automatic functions and initiators as described in Table 2.2.13-2.

(3) The SSLC/ESF provides controls, interlocks, and bypasses in the MCR as described in Table 2.2.13-3.

(4) (Deleted)

(5) (Deleted)

(6) (Deleted)

(7) (Deleted)

(8) SSLC/ESF logic is designed to provide a trip initiation by requiring a coincident trip of like, unbypassed parameters in at least two divisions to cause the trip output.

(9) SSLC/ESF uses “energized-to-trip” and “fail-as-is” logic.

(10) Redundant safety-related power supplies are provided for each division.

Inspections, Tests, Analyses, and Acceptance Criteria

Table 2.2.13-4 defines the inspections, tests, and analyses, together with associated acceptance criteria for the SSLC/ESF system.

Table 2.2.13-1

SSLC/ESF Functional Arrangement

SSLC/ESF comprises four redundant, safety-related divisions of trip logics and trip actuators, located in divisionally separate rooms in the Control Building (CB) and Reactor Building (RB).
SSLC/ESF video display units (VDUs) comprise two redundant sets of four divisions of safety-related, VDUs, housed in two separate main control room panels.

Table 2.2.13-2

SSLC/ESF Automatic Functions, Initiators, and Associated Interfacing Systems

Function	Initiator	Interfacing System
ADS	RPV reactor water level low (Level 1) Drywell pressure high	NBS CMS
GDCS Injection	RPV reactor water level low (Level 1) Drywell pressure high	NBS, GDCS CMS
GDCS Equalizing Lines	RPV reactor water level low (Level 1)	NBS, GDCS
ICS	RPV reactor water level low (Level 1)	NBS, ICS
SLC	RPV reactor water level low (Level 1)	NBS, SLC, ATWS/SLC
CRHAVS emergency filtration mode	CRHA inlet air supply radiation high from Process Radiation Monitoring System (PRMS)	PRMS, CRHAVS
CRHAVS temperature control	CRHA high room temperature	Nonsafety-related MCR N-DCIS Load Groups A, B and C

Table 2.2.13-3

SSLC/ESF Controls, Interlocks, and Bypasses

Parameter	Description
Control	ADS sequence actuation from VDUs in the MCR (one arm/fire switch per division) GDCS sequence actuation from VDUs in the MCR (one arm/fire switch per division)
Interlock	ECCS-LOCA confirmation time delay for ADS Group 1 SRV open Group 2 SRV open time delay Group 1 DPV open and SLC initiation time delay Group 2 DPV open time delay Group 3 DPV open time delay Group 4 DPV open time delay GDCS manual initiation interlock on low reactor pressure signal GDCS injection squib valve open time delay GDCS equalization line squib valve open time delay GDCS equalization line squib valve open interlock (RPV water level low (Level 0.5) CRHAVS CRHA high room temperature signal to trip major N-DCIS power supplies within CRHA
Bypass	SSLC/ESF Division of sensors division manual bypass switch SSLC/ESF manual control bypasses (disables) the load driver/discrete output

Table 2.2.13-4

ITAAC For The Engineered Safety Features Safety System Logic and Control (SSLC/ESF)

Design Commitment	Inspections, Tests, Analyses	Acceptance Criteria
1. The SSLC/ESF functional arrangement is as described in Subsection 2.2.13 and Table 2.2.13-1.	Inspections will be conducted of the as-built configuration.	The system conforms to the functional arrangement as described in Subsection 2.2.13 and Table 2.2.13-1.
2. The SSLC/ESF provides automatic functions and initiators as described in Table 2.2.13-2.	Test(s) will be performed on the as-built system using simulated signals.	The system is capable of performing the functions as described in Table 2.2.13-2.
3. The SSLC/ESF provides controls, interlocks, and bypasses in the MCR as described in Table 2.2.13-3.	Test(s) will be performed on the as-built system using simulated signals.	The system controls, interlocks and bypasses exist, can be retrieved in the main control room, and are performed in response to simulated signals and manual actions as described in Table 2.2.13-3.
4. (Deleted).		
5. (Deleted)		
6. (Deleted).		
7. (Deleted)		
8. SSLC/ESF logic is designed to provide a trip initiation by requiring a coincident trip of like, unbypassed parameters in at least two divisions to cause the trip output.	Test(s) of the as-built SSLC/ESF system will be performed using simulated signals and actuators.	The as-built SSLC/ESF system performs trip initiation when a coincident trip of like, unbypassed parameters occurs in at least two divisions.
9. SSLC/ESF uses “energized-to-trip” and “fail-as-is” logic.	Test(s) of the as-built SSLC/ESF system will be performed using simulated signals and actuators.	The as-built SSLC/ESF system uses “energized-to-trip” and “fail-as-is” logic.

Table 2.2.13-4

ITAAC For The Engineered Safety Features Safety System Logic and Control (SSLC/ESF)

Design Commitment	Inspections, Tests, Analyses	Acceptance Criteria
10. Redundant safety-related power supplies are provided for each division of the SSLC/ESF System.	Test(s) will be performed on the SSLC/ESF System by providing a test signal in only one safety-related division at a time.	The test signal exists only in the safety-related division under test in the SSLC/ESF System.

2.2.14 Diverse Instrumentation and Controls

Design Description

The diverse instrumentation and control systems comprise the safety-related Anticipated Transients Without Scram Standby Liquid Control (ATWS/SLC) system and the nonsafety-related Diverse Protection System (DPS).

The ATWS/SLC and DPS alarms, displays, controls, and status indications in the MCR are addressed by Section 3.3.

The environmental and seismic qualification of ATWS/SLC and DPS components described in Table 2.2.14-1 is addressed in Section 3.8.

The containment isolation components that correspond to the DPS isolation functions are addressed in Subsection 2.15.1.

Conformance with IEEE Std. 603 requirements by the safety-related control system structures, systems, or components defined in Table 2.2.14-1 are addressed in Subsection 2.2.15.

ATWS/SLC hardware and software is developed in accordance with the software development program described in Section 3.2 as part of the ATWS/SLC software projects.

DPS hardware and software is developed in accordance with the software development program described in Section 3.2 as part of the DPS software projects.

(1) The ATWS/SLC and DPS diverse instrumentation and control systems functional arrangement as described in Subsection 2.2.14 and Table 2.2.14-1.

(2) The ATWS/SLC and DPS diverse instrumentation and control systems provide automatic functions and initiators as described in Table 2.2.14-2.

(3) The ATWS/SLC and DPS diverse instrumentation and control systems provide controls, interlocks and bypasses in the MCR as described in Table 2.2.14-3.

(4) (Deleted)

(5) (Deleted)

(6) (Deleted)

(7) (Deleted)

(8) Confirmatory analyses support and validate the DPS design scope and the fire separation criteria.

(9) (Deleted)

(10) (Deleted)

(11) DPS controller cabinets are in fire areas separate from the other N-DCIS, Remote Multiplier Unit (RMU), and Q-DCIS cabinets.

(12) ATWS/SLC system logic is designed to provide a trip initiation by requiring coincident trip of like, unbypassed parameters in at least two divisions to cause the trip output.

(13) Each ATWS/SLC System division is powered from its respective safety-related power supply.

(14) DPS is powered from nonsafety-related load group power supplies.

(15) DPS triple redundant digital controllers require agreement in at least two channels out of three channels for a coincident trip actuation.

(16) DPS logic is “energize-to-actuate”.

(17) DPS process variable sensors are diverse from those used by the RPS and SSLC/ESF.

(18) The DPS network segment uses diverse hardware and software from that used by the RPS and SSLC/ESF.

Inspections, Tests, Analyses, and Acceptance Criteria

Table 2.2.14-4 defines the inspections, tests, and analyses, together with associated acceptance criteria for the ATWS/SLC and DPS.

Table 2.2.14-1

Diverse Instrumentation and Control Systems Functional Arrangement

ATWS/SLC system is housed within each of the divisional safety-related reactor trip and isolation function (RTIF) cabinets on a separate chassis from the other equipment within the cabinet.
RTIF cabinets housing the ATWS/SLC system are located within the divisional electrical rooms in the control building (CB).
ATWS/SLC has RPV dome pressure sensors and RPV water level sensors that are hardwired to their respective divisional controller in the CB.
DPS controllers are housed in a cabinet located in the CB.

Table 2.2.14-2

Diverse Instrumentation and Controls

Functions, Initiators, and Interfacing Systems [1]

Function	Initiator	Interfacing System
SLC system initiation (ATWS/SLC)	RPV dome pressure high and Startup Range Neutron Monitor (SRNM) signal greater than ATWS setpoint (SRNM ATWS permissive) with time delay	NMS, NBS, SLC
	RPV water level low (Level 2) and SRNM ATWS permissive with time delay	NBS, NMS, SLC
Feedwater Runback (ATWS/SLC)	RPV dome pressure high and SRNM ATWS permissive	NBS, NMS, FWCS
ADS inhibit (ATWS/SLC)	RPV water level low (Level 2) and APRM ATWS permissive	NBS, NMS, SSLC/ESF
	RPV dome pressure high and APRM ATWS permissive with time delay	NBS, NMS, SSLC/ESF
ATWS ARI and FMCRD motor run-in (DPS)	RPV dome pressure high	NBS, CRD, RC&IS
	RPV water level low (Level 2)	NBS, CRD, RC&IS
	Diverse scram command	CRD, RC&IS
SCRRI/SRI (DPS)	RC&IS SCRRI signal	RC&IS, RPS
	ATLM *SCRRI*/SRI signal	RPS, RC&IS
	Generator load rejection signal	TGCS, RPS, RC&IS
	Loss of feedwater heating	C&FS, NMS, RPS, RC&IS
	Turbine trip signal	TGCS, RPS, RC&IS
	OPRM thermal neutron flux oscillation	NMS, RPS, RC&IS

Table 2.2.14-2

Diverse Instrumentation and Controls

Functions, Initiators, and Interfacing Systems [1]

Function	Initiator	Interfacing System
Delayed Feedwater Runback (DPS)	SCRRI/SRI signal and power levels remain elevated	NMS, RC&IS, FWCS
	RPS scram command and power levels remain elevated	RPS, NMS, FWCS

[1]Implementing system is shown in parentheses.

Table 2.2.14-3

Diverse Instrumentation and Controls

Controls, Interlocks and Bypasses[1]

Control	Manual initiation of ATWS SLC (ATWS/SLC) Manual initiation of ATWS ARI (ATWS/SLC) Manual initiation of ATWS Feedwater Runback (ATWS/SLC) Manual initiation of FMCRD Run-in (DPS) Manual inhibit of SSLC/ESF ECCS functions under ATWS conditions[2] (ATWS/SLC)
Interlock	SRNM ATWS Permissive (ATWS/SLC) APRM ATWS Permissive (ATWS/SLC) Time Delays
Bypass	Division of sensor bypass (ATWS/SLC) Sensor channel bypass (DPS)

[1]Implementing system is shown in parentheses.

[2]For applicable ATWS conditions, refer to Initiator column, Table 2.2.14-2, for the Function "ADS inhibit (ATWS/SLC)."

Table 2.2.14-4

ITAAC For The Diverse Instrumentation and Controls

Design Commitment	Inspections, Tests, Analyses	Acceptance Criteria
1. The ATWS/SLC and DPS diverse instrumentation and control systems functional arrangement is as described in Subsection 2.2.14 and Table 2.2.14-1.	Inspection(s) will be conducted on the as-built system configuration.	The system's conformance to the functional arrangement as described in Subsection 2.2.14 and Table 2.2.14-1.
2. The ATWS/SLC and DPS diverse instrumentation and control systems provide automatic functions and initiators as described in Table 2.2.14-2.	Tests will be conducted on the ATWS/SLC and DPS safety-related and nonsafety-related components on the as-built system configuration using simulated signals.	The ATWS/SLC and DPS are capable of performing the functions as described in Table 2.2.14-2.
3. The ATWS/SLC and DPS diverse instrumentation and control systems provide controls, interlocks and bypasses in the MCR as described in Table 2.2.14-3.	Test(s) will be performed on the ATWS/SLC and DPS safety-related and nonsafety-related logic using simulated signals and actuators for controls, interlocks, and bypasses, as described in Table 2.2.14-3.	The ATWS/SLC and DPS logic controls, interlocks and bypasses exist, can be retrieved in the main control room, and are performed in response to simulated signals and manual actions as described in Table 2.2.14-3.
4. (Deleted)		
5. (Deleted)		
6. (Deleted)		
7. (Deleted)		
8. Confirmatory analyses support and validate the DPS design scope and the fire separation criteria.	i. Complete Failure Modes and Effects Analysis (FMEA) per NUREG/CR-6303 of the Q-DCIS to validate the DPS protection functions.	i. The FMEA completed per NUREG/CR-6303 of the Q-DCIS has addressed in the DPS design scope.

Table 2.2.14-4

ITAAC For The Diverse Instrumentation and Controls

Design Commitment	Inspections, Tests, Analyses	Acceptance Criteria
	ii. Inspection of the DPS platform requirements phase summary baseline review report will be performed.	ii. The platform requirements phase summary baseline review report contains the validated DPS design scope.
	iii. Inspection(s) of the DPS platform test phase summary baseline review report(s) will be performed.	iii. The DPS platform(s) test phase summary baseline review report(s) • Identify and reconcile changes, deletions, and additions to the applicable DPS design scope. • Confirm that tests show that the DPS performs in accordance with the applicable DPS design scope.
	iv. Inspections will be performed to confirm the control logic cabinets for each of the containment vacuum breaker isolation valves meet their fire protection separation criteria.	iv. The as-built location of the control logic cabinets for the containment vacuum breaker isolation valves are separated according to fire protection separation criteria for the various locations.
9. (Deleted)		
10. (Deleted)		
11. DPS controller cabinets are in fire areas separate from the other N-DCIS, RMU, and Q-DCIS cabinets.	Inspections will be performed to confirm as-built location of the DPS cabinets.	The as-built physical location of the DPS cabinets are in fire areas separate from the other N-DCIS, RMU, and Q-DCIS cabinets.

Table 2.2.14-4

ITAAC For The Diverse Instrumentation and Controls

Design Commitment	Inspections, Tests, Analyses	Acceptance Criteria
12. ATWS/SLC System logic is designed to provide a trip initiation by requiring coincident trip of like, unbypassed parameters in at least two divisions to cause the trip output.	Test(s) will be performed on the ATWS/SLC system logic.	The as-built ATWS/SLC system logic provides trip initiation signals when a coincident trip signal exists in like, unbypassed parameters in at least two unbypassed divisions.
13. Each ATWS/SLC System division is powered from its respective safety-related power supply.	Test(s) will be performed on the ATWS/SLC System by providing a test signal in only one safety-related division at a time.	A test signal exists in the safety-related division under test in the ATWS/SLC System.
14. DPS is powered from nonsafety-related load group power supplies.	Test(s) will be performed on the DPS by providing a test signal in only one DPS load group at a time.	A test signal exists in the load group under test in the DPS.
15. DPS triple redundant digital controllers require agreement in at least two channels out of three channels for a coincident trip actuation.	Test(s) will be performed on the DPS by providing simulated signals to each DPS channel.	Trip actuation signals exist only when at least two channels are in coincident agreement.
16. DPS logic is “energize-to-actuate”.	Test(s) will be performed on the DPS system logic.	Trip actuation signals are “energize-to-actuate”.
17. DPS process variable sensors are diverse from those used by the RPS and SSLC/ESF.	Analysis(es) will be performed on the DPS sensor failure modes and effects.	The DPS sensors are diverse from the RPS and SSLC/ESF sensors.
18. The DPS network segment uses diverse hardware and software from that used by the RPS and SSLC/ESF.	Analysis(es) will be performed on the DPS network segment failure modes and effects.	The DPS network segment is diverse from the RPS and SSLC/ESF hardware and software.

2.2.15 Instrumentation & Control Compliance With IEEE Std. 603

Design Description

IEEE Std. 603 establishes the minimum functional and design requirements for the power, instrumentation, and control portions of safety systems. ESBWR divides safety systems into two parts: the safety-related distributed control and information system (Q-DCIS) platforms, and the associated functional systems that contain the sensors and actuators used by the Q-DCIS platforms.

In accordance with the software development process described in Section 3.2 and the defense-in-depth and diversity strategy described in Subsection 2.2.14, the protection systems are executed as software projects on particular Q-DCIS platforms. The software projects are named RTIF, NMS, SSLC/ESF, Vacuum Breaker Isolation Function(VBIF), ATWS/SLC, and HP CRD Isolation Bypass Function.

Table 2.2.10-1 shows the relationship between the Q-DCIS platforms and their corresponding software projects. As shown, the RTIF-NMS platform has two software projects: RTIF and NMS. The SSLC/ESF platform has one software project: SSLC/ESF. The Independent Control Platform has three software projects: VBIF, ATWS/SLC, and HP CRD Isolation Bypass Function.

Demonstration of compliance with IEEE Std. 603 means the Q-DCIS documentation includes design bases that make appropriate reference to IEEE Std. 603 design criteria and that the resulting as-built equipment has been inspected, tested, or analyzed to show that the Q-DCIS will be capable of performing in accordance with the design bases. The choice of whether an inspection, test, or analysis is required to close a particular ITAAC is defined in the documentation associated with the {{Design Acceptance Criteria}} ITAAC closure report for the software projects in response to ITAAC defined in Section 3.2.

IEEE Std. 603 divides the Q-DCIS into three features: sense, command, and execute features. Sense features comprise sensors. Command features comprise the Q-DCIS platforms. Execute features comprise actuators. Each of these features is treated differently within Tier 1 because of influences outside of the scope of IEEE Std. 603.

As a result of these differences, Table 2.2.15-1 was developed to group the software projects with their associated functional system(s), if any, and to define how the various IEEE Std. 603 criteria will be demonstrated by an ITAAC for each software project.

Table entries marked with an R means the IEEE Std. 603 criterion compliance report(s) for the indicated software projects (i.e., RTIF, NMS, SSLC/ESF, VBIF, ATWS/SLC, and HP CRD Isolation Bypass Function) include(s) the associated parts of the functional systems marked with a C or string of Cs, if any, immediately to the right of the R. Table entries marked with a C means compliance with the IEEE Std. 603 criterion is documented by one or more reports written against the first software projects marked with an R, to the left of the C(s). For example, the report(s) for the RTIF software projects will demonstrate compliance to IEEE Std. 603 criterion 5.1 for RPS, LD&IS MSIV, Containment Monitoring System (CMS)-Suppression Pool Temperature Monitoring (SPTM), NBS, and CRD. The report(s) may be referenced or attached

to a software project lifecycle phase summary baseline review record (BRR) reference described in Subsection 3.2 to close the Table 2.2.15-2 ITAAC.

Table headings contain the software projects or the functional system identifier and a parenthetical reference to the section or subsection where additional information about the software projects or functional system can be found. These parenthetical references are reverse references that point back to the originating system. The IEEE Std. 603 criteria apply only to those structures, systems, or components (SSCs) directly associated with the performance of the safety-related function of the software projects. Complete lists of applicable SSCs and functions are defined in the documentation associated with the {{Design Acceptance Criteria}} ITAAC closure report for each software project in response to ITAAC defined in Section 3.2. These lists along with the information in the tables associated with a software project or functional system in each column define the scope of the IEEE Std. 603 ITAAC.

Refer to Sections 3.2, 3.3, 3.6, 3.7, and 3.8, as described, for ITAAC associated with the IEEE Std. 603 criteria that do not appear in Table 2.2.15-1.

When the IEEE Std. 603 design criteria are applied to platforms relying on the use of software to perform their safety-related functions, additional criteria from IEEE Std. 7-4.3.2, which augments the IEEE Std. 603 criteria, also apply to the software projects as described under the applicable IEEE Std. 603 criterion. The evaluation of Q-DCIS platforms for compliance with IEEE Std. 603 and IEEE Std. 7-4.3.2 criteria includes consideration of the effects that the associated sensors and actuators have on the performance of the safety-related function.

IEEE Std. 603, Criteria 4.2, 4.3, 4.10, 4.11, and 4.12, are not included as ITAAC because NUREG 0800, Section 14.3.5, and RG 1.206, Section C.II.1, do not include these criteria as ITAAC.

IEEE Std. 603, Criterion 5.3, Quality, requires that the Q-DCIS be of a quality that is consistent with minimum maintenance requirements and low failure rates and be designed, manufactured, inspected, installed, tested, operated, and maintained in accordance with a prescribed quality assurance (QA) program. The QA program for Q-DCIS is not addressed in Tier 1.

The following paragraphs provide references to the tables associated with the software projects and their associated functional systems. For example, RPS refers to Subsection 2.2.7, which associates Tables 2.2.7-1, 2.2.7-2, and 2.2.7-3 with RPS.

Process sensors and actuators that provide sense and execute functions associated with the software projects in Table 2.2.15-1 are found in Tables 2.1.2-2, 2.2.2-6, 2.2.4-5, 2.4.1-2, 2.4.2-2, 2.15.1-1c, and 2.15.7-1, and marked “Yes” in the Control Q-DCIS column.

Functional arrangement of the software projects platforms (except VBIF) are found in Tables 2.2.5-1, 2.2.7-1, 2.2.13-1, 2.2.14-1, and 2.2.16-1.

The independent control platforms associated with the VBIF software projects are found in Table 2.15.1-1c.

Functions, initiators, and interfacing systems associated with the software projects (except for the functional system LD&IS) are found in Tables 2.2.5-2, 2.2.7-2, 2.2.13-2, 2.2.14-2, and 2.2.16-2.

The isolation functions and monitored variables associated with the functional system LD&IS are found in Table 2.2.12-2.

Isolation valves associated with the functional system LD&IS are found in Table 2.15.1-1a, and marked "Yes" in the Safety-Related column.

Isolation dampers associated with the functional system LD&IS are found in Tables 2.16.2-1, 2.16.2-3, 2.16.2-5, and 2.16.2-8.

Controls, interlocks, and bypasses associated with the software projects are found in Tables 2.2.5-3, 2.2.7-3, 2.2.12-4, 2.2.13-3, 2.2.14-3, and 2.2.16-3.

The process radiation monitors associated with the functional system PRMS are found in Table 2.3.1-1, marked "Yes" in the Safety-Related column.

Refer to Sections 3.2, 3.3, 3.7, and 3.8, as described, for ITAAC associated with the IEEE Std. 603 criteria that do not appear in Table 2.2.15-1.

The design descriptions that demonstrate compliance with the IEEE Std. 603 standard are shown below:

1a. Criterion 4.1, Identification of design basis events: The software project's design bases list the applicable design basis events, the applicable reactor modes of operation, the initial conditions requiring protective action, and the allowable limits of plant conditions for each such event.

1b. Criterion 4.1, Identification of design basis events: The as-built software project's design bases reconcile any changes to the design bases events, applicable reactor modes of operation, initial conditions requiring protective action, and allowable limits of plant conditions for each such event.

2a. Criterion 4.4, Identification of variables monitored: The software project's design bases list:

- The variables or combinations of variables, or both, that are to be monitored to manually or automatically, or both, control each protective action;
- The analytical limit associated with each variable;
- The ranges (normal, abnormal, and accident conditions) associated with each variable; and
- The rates of change of these variables to be accommodated until proper completion of the protective action is ensured;

2b. Criterion 4.4, Identification of variables monitored: The as-built software project's design bases reconcile any changes to the list of:

- The variables or combinations of variables, or both, that are to be monitored to manually or automatically, or both, control each protective action;
- The analytical limit associated with each variable;
- The ranges (normal, abnormal, and accident conditions) associated with each variable; and
- The rates of change of these variables to be accommodated until proper completion of the protective action is ensured;

3a. Criterion 4.5, Minimum criteria for manual initiation and control of protective actions subsequent to initiation: The software project's design bases list:

- The points in time and the plant conditions during which manual control is allowed;
- The justification for permitting initiation or control subsequent to initiation solely by manual means;
- The range of environmental conditions imposed upon the operator during normal, abnormal, and accident conditions throughout which the manual operations will be performed; and
- The variables that will be displayed for the operator to use in taking manual action.

3b. Criterion 4.5, Minimum criteria for manual initiation and control of protective actions subsequent to initiation: The as-built software project's design bases list:

- The points in time and the plant conditions during which manual control is allowed;
- The justification for permitting initiation or control subsequent to initiation solely by manual means;
- The range of environmental conditions imposed upon the operator during normal, abnormal, and accident conditions throughout which the manual operations will be performed; and
- The variables that will be displayed for the operator to use in taking manual action.

4a. Criterion 4.6, Identification of the minimum number and location of sensors: The software project's design bases list the minimum number and locations of sensors for those variables that are required to perform a safety-related function and have a spatial dependence (i.e., where the variable varies as a function of position in a particular region).

4b. Criterion 4.6, Identification of the minimum number and location of sensors: The as-built software project's design bases reconcile any changes to the list of the minimum number and locations of sensors for those variables that are required to perform a safety-related function and have a spatial dependence (i.e., where the variable varies as a function of position in a particular region).

5a. Criterion 4.7, Range of transient and steady-state conditions: The software project's design bases list the range of transient and steady-state conditions of motive and control power and the environment (e.g., voltage, frequency, radiation, temperature, humidity, pressure, and vibration) during normal, abnormal, and accident circumstances throughout which the safety-related system is to perform.

5b. Criterion 4.7, Range of transient and steady-state conditions: The as-built software project's design bases reconcile any changes to the list of the range of transient and steady-state conditions of motive and control power and the environment (e.g., voltage, frequency, radiation, temperature, humidity, pressure, and vibration) during normal, abnormal, and accident circumstances throughout which the safety-related system is to perform.

6a. Criterion 4.8, Identification of conditions having the potential for causing functional degradation of safety-related system's performance: The software project's design bases list the conditions having the potential to cause functional degradation of safety-related system performance.

6b. Criterion 4.8, Identification of conditions having the potential for causing functional degradation of safety-related system's performance: The as-built software project's design bases reconcile any changes to the list of the conditions having the potential to cause functional degradation of safety-related system performance.

7a. Criterion 4.9, Identification of the methods used to determine reliability of the safety system design: The software project's design bases list the methods and any qualitative and quantitative reliability goals used to assess the reliability of the safety-related system design.

7b. Criterion 4.9, Identification of the methods used to determine reliability of the safety system design: The as-built software project's design bases reconcile any changes to the list: of the methods and any qualitative and quantitative reliability goals used to assess the reliability of the safety-related system design.

8a. Criterion 5.1, Single-failure criterion: The software project's design bases show compliance with the single-failure criterion.

8b. Criterion 5.1, Single-failure criterion: The as-built software projects comply with the results of the FMEA.

9a1. Criteria 5.2 and 7.3, Completion of Protective Actions: The software projects are designed so that once initiated (automatically or manually), the intended sequences of safety-related functions of the execute features continue until completion.

9a2. Criteria 5.2 and 7.3, Completion of Protective Actions: The software projects are designed so that after completion, deliberate operator action is required to return the safety-related systems to normal.

9b1. Criteria 5.2 and 7.3, Completion of Protective Actions: The as-built software projects ensure that once initiated (automatically or manually), the intended sequences of safety-related functions of the execute features continue until completion.

9b2. Criteria 5.2 and 7.3, Completion of Protective Actions: The as-built software projects ensure that after completion, deliberate operator action is required to return the safety-related systems to normal.

10a1. Criteria 5.6, Independence and 6.3, Interactions Between the Sense and Command Features and Other Systems: The software projects have four independent, redundant divisions.

10a2. Criteria 5.6, Independence and 6.3, Interactions Between the Sense and Command Features and Other Systems: The software project's interdivisional communication systems have optically isolated fiber optic communication pathways.

10a3. Criteria 5.6, Independence and 6.3, Interactions Between the Sense and Command Features and Other Systems: The software project's safety-related functions are

performed independently of the existence and function of any nonsafety-related component, data, and communication channel.

10b1. Criteria 5.6, Independence and 6.3, Interactions Between the Sense and Command Features and Other Systems: The as-built software projects have four independent, redundant divisions.

10b2. Criteria 5.6, Independence and 6.3, Interactions Between the Sense and Command Features and Other Systems: The as-built software project's interdivisional communication systems have optically isolated fiber optic communication pathways.

10b3. Criteria 5.6, Independence and 6.3, Interactions Between the Sense and Command Features and Other Systems: The as-built software project's safety-related functions are performed independently of the existence and function of any nonsafety-related component, data, and communication channel.

11a. Criteria 5.7 and 6.5, Capability for Test & Calibration: The software projects have maintenance bypasses that allow testing their calibration of one out of four divisions while retaining capability to accomplish their safety-related functions.

11b1. Criteria 5.7 and 6.5, Capability for Test & Calibration: The as-built software project's maintenance bypasses show that the divisions not in bypass status will accomplish their safety-related functions.

11b2. Criteria 5.7 and 6.5, Capability for Test & Calibration: The as-built software projects' maintenance bypasses show that when one division is placed into maintenance bypass mode, the condition is alarmed in the MCR and the division logic automatically becomes a two-out-of-three voting scheme.

12a. Criterion 5.9, Control of Access: The software projects are housed within cabinets with key lock doors, has key lock switches, and utilizes passwords that permit administrative control of access to safety-related system equipment.

12b. Criterion 5.9, Control of Access: The as-built software projects are housed within cabinets with key lock doors, has key lock switches, and utilizes passwords that permit administrative control of access to safety-related system equipment.

13a. Criterion 5.10, Repair: The software projects have self-diagnostic features that facilitate the timely recognition, location, replacement, repair, and adjustment of malfunctioning equipment.

13b. Criterion 5.10, Repair: The as-built software projects have self-diagnostic features that facilitate the timely recognition, location, replacement, repair, and adjustment of malfunctioning equipment.

14a. Criterion 5.11, Identification: The redundant portions of the software projects are distinctly identified.

14b. Criterion 5.11, Identification: The redundant portions of the as-built software projects are distinctly identified.

15a. Criterion 5.12, Auxiliary Features: Other auxiliary features cannot degrade the software project's performance below an acceptable level.

15b. Criterion 5.12, Auxiliary Features: Other auxiliary features cannot degrade the as-built software project's performance below an acceptable level.

16a. Criteria 6.1 and 7.1, Automatic Control: The software projects provide the means to automatically initiate and control the required safety-related functions.

16b. Criteria 6.1 and 7.1, Automatic Control: The as-built software projects provide the means to automatically initiate and control the required safety-related functions.

17a. Criteria 6.2 and 7.2, Manual Control: The software projects have features in the main control room to manually initiate and control the automatically initiated safety-related functions at the division level.

17b. Criteria 6.2 and 7.2, Manual Control: The as-built software projects have features in the main control room to manually initiate and control the automatically initiated safety-related functions at the division level.

18a. Criterion 6.4, Derivation of System Inputs: Sense and command feature inputs for the software projects are derived from signals that are direct measures of the desired variables specified in the design bases.

18b. Criterion 6.4, Derivation of System Inputs: Sense and command feature inputs for the as-built software projects are derived from signals that are direct measures of the desired variables specified in the design bases.

19a1. Criteria 6.6 and 7.4, Operating Bypasses: The software projects automatically prevent the activation of an operating bypass, whenever the applicable permissive conditions for an operating bypass are not met.

19a2. Criteria 6.6 and 7.4, Operating Bypasses: The software projects automatically remove activated operating bypass(es), if the plant conditions change so that an activated operating bypass is no longer permissible.

19b1. Criteria 6.6 and 7.4, Operating Bypasses: The as-built software projects automatically prevent the activation of an operating bypass, whenever the applicable permissive conditions for an operating bypass are not met.

19b2. Criteria 6.6 and 7.4, Operating Bypasses: The as-built software projects show that they automatically removes activated operating bypass(es), if the plant conditions change so that an activated operating bypass is no longer permissible.

20a. Criteria 6.7, 7.5, and 8.3, Maintenance Bypasses: The software projects are capable of performing their safety-related functions, when one division is in maintenance bypass.

20b1. Criteria 6.7, 7.5, and 8.3, Maintenance Bypasses: The as-built software projects ensure that they are capable of performing their safety-related functions, when one division is in maintenance bypass.

20b2. Criteria 6.7, 7.5, and 8.3, Maintenance Bypasses: The as-built software projects ensure that they are capable of performing their safety-related functions, when one power supply division is in maintenance bypass.

21a. Criterion 6.8, Setpoint: The software project's setpoints for safety-related functions are determined by a defined setpoint methodology.

21b. Criterion 6.8, Setpoint: Any changes to the setpoints have been reconciled for as-built software projects.

22a. Criterion 8.1, Electrical Power Source: The software project's electrical components receive power from their respective, divisional, safety-related power supplies.

22b. Criterion 8.1, Electrical Power Source: The as-built software project's as-built electrical components receive power from their respective, divisional, safety-related power supplies.

23a. Criterion 8.2, Non-electrical Power Sources: The software project's actuators receive non-electric power from safety-related sources.

23b. Criterion 8.2, Non-electrical Power Sources: The as-built software project's actuators receive non-electric power from safety-related sources.

Inspections, Tests, Analyses, and Acceptance Criteria

Table 2.2.15-2 defines the inspections, tests, and analyses, together with acceptance criteria for the software projects.

Subsections 2.1.2, 2.2.2, 2.2.4, 2.2.5, 2.2.7, 2.2.10, 2.2.12, 2.2.13, 2.2.14, 2.2.16, 2.3.1, 2.4.1, 2.4.2, 2.15.1, and 2.15.7, 2.16.2.2, 2.16.2.3 define the inspections, tests, and analyses, together with associated acceptance criteria for the sensors, actuators, functional arrangement, functional performance, controls, interlocks, and bypasses associated with the software projects.

Table 2.2.15-1
IEEE Std. 603 Criterion System Applicability Matrix (1)(2)

Software projects		RTIF-NMS Platform							SSLC/ESF Platform										ICP		
		RTIF						NMS											VBIF	ATWS/ SLC	HP CRD IBF
Table 2.2.15-2, Item No.	IEEE Std. 603 Criterion	RTIF (2.2.10)	RPS (2.2.7)	LD&IS MSIV (2.2.12) [Note (4)]	CMS-SPTM (2.15.7)	NBS (2.1.2)	CRD (2.2.2)	NMS (2.2.5)	SSLC/ESF (2.2.13)	LD&IS non-MSIV (2.2.12) [Note (3)]	PRMS (2.3.1)	CMS non-SPTM (2.15.7) [Note (4)]	NBS (2.1.2)/ADS (N/A)	GDCS (2.4.2)	ICS (2.4.1)	SLC (2.2.4)	CBVS (2.16.2.2, 2.16.2.3) [Note (5)]	CRD (2.2.2)	VB Isolation Function (2.15.1)	ATWS/SLC (2.2.14)	HP CRD Isolation Bypass Function (2.2.16)
1	4.1	R	C	C	C	C	C	R	R	C	C	C	C	C	C	C	C	C	R	R	R
2	4.4	R	C	C	C	C	C	R	R	C	C	C	C	C	C	C	C	C	R	R	R
3	4.5	R	C	C	C	C	C	R	R	C	C	C	C	C	C	C	C	C	R	R	R
4	4.6	R	C	C	C	C	C	R	R	C	C	C	C	C	C	C	C	C	R	R	R
5	4.7	R	C	C	C	C	C	R	R	C	C	C	C	C	C	C	C	C	R	R	R
6	4.8	R	C	C	C	C	C	R	R	C	C	C	C	C	C	C	C	C	R	R	R
7	4.9	R	C	C	C	C	C	R	R	C	C	C	C	C	C	C	C	C	R	R	R
8	5.1	R	C	C	C	C	C	R	R	C	C	C	C	C	C	C	C	C	R	R	R
9	5.2 and 7.3	R	C	C	C	C	C	R	R	C	C	C	C	C	C	C	C	C	R	R	R
10	5.6 and 6.3	R	C	C	C	C	C	R	R	C	C	C	C	C	C	C	C	C	R	R	R
11	5.7 and 6.5	R	C	C	C	C	C	R	R	C	C	C	C	C	C	C	C	C	R	R	R
12	5.9	R	C	C	C	C	C	R	R	C	C	C	C	C	C	C	C	C	R	R	R
13	5.10	R	C	C	C	C	C	R	R	C	C	C	C	C	C	C	C	C	R	R	R
14	5.11	R	C	C	C	C	C	R	R	C	C	C	C	C	C	C	C	C	R	R	R
15	5.12	R	C	C	C	C	C	R	R	C	C	C	C	C	C	C	C	C	R	R	R
16	6.1 and 7.1	R	C	C	C	C	C	R	R	C	C	C	C	C	C	C	C	C	R	R	R
17	6.2 and 7.2	R	C	C	C	C	C	R	R	C	C	C	C	C	C	C	C	C	R	R	R

Table 2.2.15-1
IEEE Std. 603 Criterion System Applicability Matrix (1)(2)

Software projects		RTIF-NMS Platform							SSLC/ESF Platform										ICP		
		RTIF						NMS											VBIF	ATWS/ SLC	HP CRD IBF
Table 2.2.15-2, Item No.	IEEE Std. 603 Criterion	RTIF (2.2.10)	RPS (2.2.7)	LD&IS MSIV (2.2.12) [Note (4)]	CMS-SPTM (2.15.7)	NBS (2.1.2)	CRD (2.2.2)	NMS (2.2.5)	SSLC/ESF (2.2.13)	LD&IS non-MSIV (2.2.12) [Note (3)]	PRMS (2.3.1)	CMS non-SPTM (2.15.7) [Note (4)]	NBS (2.1.2)/ADS (N/A)	GDCS (2.4.2)	ICS (2.4.1)	SLC (2.2.4)	CBVS (2.16.2.2, 2.16.2.3) [Note (5)]	CRD (2.2.2)	VB Isolation Function (2.15.1)	ATWS/SLC (2.2.14)	HP CRD Isolation Bypass Function (2.2.16)
18	6.4	R	C	C	C	C	C	R	R	C	C	C	C	C	C	C	C	C	R	R	R
19	6.6 and 7.4	R	C	C	C	C	C	R	R	C	C	C	C	C	C	C	C	C	R	R	R
20	6.7, 7.5, and 8.3	R	C	C	C	C	C	R	R	C	C	C	C	C	C	C	C	C	R	R	R
21	6.8	R	C	C	C	C	C	R	R	C	C	C	C	C	C	C	C	C	R	R	R
22	8.1	R	C	C	C	C	C	R	R	C	C	C	C	C	C	C	C	C	R	R	R
23	8.2	R	C	C	C	C	C	R	R	C	C	C	C	C	C	C	C	C	R	R	R

Notes:

(1) R means the IEEE Std. 603 criterion compliance report(s) for the indicated software projects (i.e., RTIF, NMS, SSLC/ESF, VB Isolation Function, ATWS/SLC, and HP CRD Isolation Bypass Function) include(s) the associated parts of the functional systems marked with a C or string of Cs, if any, immediately to the right of the R. C means compliance with the IEEE Std. 603 criterion is documented by one or more reports written against the first software projects marked with an R, to the left of the C(s). For example, the report(s) for the RTIF software projects will demonstrate compliance to IEEE Std. 603 criterion 5.1 for RPS, LD&IS MSIV, CMS-SPTM, NBS, and CRD.

(2) IEEE Std. 603 criteria apply only to the safety-related portions of the functional systems that perform sense, command, or execute functions.

(3) LD&IS non-MSIV functions control the safety-related actuators (isolation valves and isolation dampers) in the following nonsafety-related systems: RWCU/SDC, FAPCS, EFDS, CIS, CWS, HPNSS, SAS, RBVS, CBVS, FBVS, CRD.

(4) CMS (non-SPTM) provides sensor inputs for both LD&IS MSIV and LD&IS non-MSIV functions.

(5) CBVS includes the safety-related CB isolation dampers (see Note 3), EFU and CRHAVS. SSLC/ESF platform executes the CRHS function logic for the safety-related CBVS subsystems, CRHAVS and EFU.

Table 2.2.15-2

ITAAC For IEEE Std. 603 Compliance Confirmation

Design Commitment	Inspections, Tests, Analyses	Acceptance Criteria
1a. Criterion 4.1, Identification of design basis events: The software project's design bases list the applicable design basis events, the applicable reactor modes of operation, the initial conditions requiring protective action, and the allowable limits of plant conditions for each such event.	Inspection of the software project design phase summary BRR will be performed for the identification of the design basis events. {{Design Acceptance Criteria}}	The software project design phase summary BRR include a list of design basis events, the applicable reactor modes of operation, the initial conditions requiring protective action, and the allowable limits of plant conditions for each such event. {{Design Acceptance Criteria}}
1b. Criterion 4.1, Identification of design basis events: The as-built software project's design bases reconcile any changes to the design bases events, applicable reactor modes of operation, initial conditions requiring protective action, and allowable limits of plant conditions for each such event.	Inspection of the as-built software project of the installation phase summary BRR will be performed for the identification of the design basis events.	The as-built software project installation phase summary BRR include a list of design basis events, the applicable reactor modes of operation, the initial conditions requiring protective action, and the allowable limits of plant conditions for each such event.

Table 2.2.15-2

ITAAC For IEEE Std. 603 Compliance Confirmation

Design Commitment	Inspections, Tests, Analyses	Acceptance Criteria
2a. Criterion 4.4, Identification of variables monitored: The software project's design bases list: • The variables or combinations of variables, or both, that are to be monitored to manually or automatically, or both, control each protective action; • The analytical limit associated with each variable; • The ranges (normal, abnormal, and accident conditions) associated with each variable; and • The rates of change of these variables to be accommodated until proper completion of the protective action is ensured.	Inspection of the software project design phase summary BRR will be performed for identification of variables. {{Design Acceptance Criteria}}	The software project design phase summary BRR identify: • The variables or combinations of variables, or both, that are to be monitored to manually or automatically, or both, control each protective action; • The analytical limit associated with each variable; • The ranges (normal, abnormal, and accident conditions) associated with each variable; and • The rates of change of these variables to be accommodated until proper completion of the protective action is ensured. {{Design Acceptance Criteria}}

Table 2.2.15-2

ITAAC For IEEE Std. 603 Compliance Confirmation

Design Commitment	Inspections, Tests, Analyses	Acceptance Criteria
2b. Criterion 4.4, Identification of variables monitored: The as-built software project's design bases reconcile any changes to the list of: • The variables or combinations of variables, or both, that are to be monitored to manually or automatically, or both, control each protective action; • The analytical limit associated with each variable; • The ranges (normal, abnormal, and accident conditions) associated with each variable; and • The rates of change of these variables to be accommodated until proper completion of the protective action is ensured.	Inspection of the software project installation phase summary BRR will be performed for identification of variables.	The software project installation phase summary BRR identify and comply with changes, deletions, and additions to: • The variables or combinations of variables, or both, that are to be monitored to manually or automatically, or both, control each protective action; • The analytical limit associated with each variable; • The ranges (normal, abnormal, and accident conditions) associated with each variable; and • The rates of change of these variables to be accommodated until proper completion of the protective action is ensured.

Table 2.2.15-2

ITAAC For IEEE Std. 603 Compliance Confirmation

Design Commitment	Inspections, Tests, Analyses	Acceptance Criteria
3a. Criterion 4.5, Minimum criteria for manual initiation and control of protective actions subsequent to initiation: The software project's design bases list: • The points in time and the plant conditions during which manual control is allowed; • The justification for permitting initiation or control subsequent to initiation solely by manual means. • The range of environmental; conditions imposed upon the operator during normal, abnormal, and accident conditions throughout which the manual operations will be performed; and • The variables that will be displayed for the operator to use in taking manual action.	Inspection of the software project design phase summary BRR will be performed for identification of the minimum criteria for manual initiation and control. {{Design Acceptance Criteria}}	The software project design phase summary BRR identify: • The points in time and the plant conditions during which manual control is allowed; • The justification for permitting initiation or control subsequent to initiation solely by manual means; • The range of environmental conditions imposed upon the operator during normal, abnormal, and accident conditions throughout which the manual operations will be performed; and • The variables that will be displayed for the operator to use in taking manual action. {{Design Acceptance Criteria}}

Table 2.2.15-2

ITAAC For IEEE Std. 603 Compliance Confirmation

Design Commitment	Inspections, Tests, Analyses	Acceptance Criteria
3b. Criterion 4.5, Minimum criteria for manual initiation and control of protective actions subsequent to initiation: The as-built software project's design bases list: • The points in time and the plant conditions during which manual control is allowed; • The justification for permitting initiation or control subsequent to initiation solely by manual means. • The range of environmental; conditions imposed upon the operator during normal, abnormal, and accident conditions throughout which the manual operations will be performed; and • The variables that will be displayed for the operator to use in taking manual action.	Inspection of the as-built software project installation phase summary BRR will be performed for identification of the minimum criteria for manual initiation and control.	The as-built software project installation phase summary BRR identify and comply with applicable changes, deletions, and additions to: • The points in time and the plant conditions during which manual control is allowed; • The justification for permitting initiation or control subsequent to initiation solely by manual means; • The range of environmental conditions imposed upon the operator during normal, abnormal, and accident conditions throughout which the manual operations will be performed; and • The variables that will be displayed for the operator to use in taking manual action.

Table 2.2.15-2

ITAAC For IEEE Std. 603 Compliance Confirmation

Design Commitment	Inspections, Tests, Analyses	Acceptance Criteria
4a. Criterion 4.6, Identification of the minimum number and location of sensors: The software project's design bases list the minimum number and locations of sensors for those variables that are required to perform a safety-related function and have a spatial dependence (i.e., where the variable varies as a function of position in a particular region).	Inspection of the software project design phase summary BRR will be performed for the identification of the minimum number of sensors and locations of sensors for those variables that have a spatial dependence. {{Design Acceptance Criteria}}	The software project design phase summary BRR identify the minimum number and locations of sensors for those variables that are required to perform a safety-related function and have a spatial dependence (i.e., where the variable varies as a function of position in a particular region). {{Design Acceptance Criteria}}
4b. Criterion 4.6, Identification of the minimum number and location of sensors: The as-built software project's design bases reconcile any changes to the list of the minimum number and locations of sensors for those variables that are required to perform a safety-related function and have a spatial dependence (i.e., where the variable varies as a function of position in a particular region).	Inspection of the as-built software project installation phase summary BRR will be performed for the identification of the minimum number of sensors and locations of sensors for those variables that have a spatial dependence.	The as-built software project installation phase summary BRR identify and comply with changes, deletions, and additions to the applicable minimum number and locations of sensors for those variables that are required to perform a safety-related function and have a spatial dependence (i.e., where the variable varies as a function of position in a particular region).

Table 2.2.15-2

ITAAC For IEEE Std. 603 Compliance Confirmation

Design Commitment	Inspections, Tests, Analyses	Acceptance Criteria
5a. Criterion 4.7, Range of transient and steady-state conditions: The software project's design bases list the range of transient and steady state conditions of motive and control power and the environment (e.g., voltage, frequency, radiation, temperature, humidity, pressure, and vibration) during normal, abnormal, and accident circumstances throughout which the safety-related system is to perform.	Inspection of the software project design phase summary BRR will be performed for the identification of the range of transient and steady-state conditions of motive and control power and the environment. {{Design Acceptance Criteria}}	The software project design phase summary BRR identify the range of transient and steady state conditions of motive and control power and the environment (e.g., voltage, frequency, radiation, temperature, humidity, pressure, and vibration) during normal, abnormal, and accident circumstances throughout which the safety-related system will perform. {{Design Acceptance Criteria}}
5b. Criterion 4.7, Range of transient and steady-state conditions: The as-built software project's design bases reconcile any changes to the list of the range of transient and steady state conditions of motive and control power and the environment (e.g., voltage, frequency, radiation, temperature, humidity, pressure, and vibration) during normal, abnormal, and accident circumstances throughout which the safety-related system is to perform.	Inspection of the as-built software project installation phase summary BRR will be performed for the identification of the range of transient and steady state conditions of motive and control power and the environment.	The as-built software project installation phase summary BRR identify and comply with changes, deletions, and additions to the applicable range of transient and steady state conditions of motive and control power and the environment (e.g., voltage, frequency, radiation, temperature, humidity, pressure, and vibration) during normal, abnormal, and accident circumstances throughout which the safety-related system will perform.

Table 2.2.15-2

ITAAC For IEEE Std. 603 Compliance Confirmation

Design Commitment	Inspections, Tests, Analyses	Acceptance Criteria
6a. Criterion 4.8, Identification of conditions having the potential for causing functional degradation of safety-related system's performance: The software project's design bases list the conditions having the potential to cause functional degradation of safety-related system performance.	Inspection of the software project design phase summary BRR will be performed for the conditions having the potential for causing functional degradation of the safety-related system's performance. {{Design Acceptance Criteria}}	The software project design phase summary BRR identify the conditions having the potential to cause functional degradation of safety-related system's performance. {{Design Acceptance Criteria}}
6b. Criterion 4.8, Identification of conditions having the potential for causing functional degradation of safety-related system's performance: The as-built software project's design bases reconcile any changes to the list of the conditions having the potential to cause functional degradation of safety-related system performance.	Inspection of the as-built software project installation phase summary BRR will be performed for the conditions having the potential for causing functional degradation of the safety-related system's performance.	The as-built software project installation phase summary BRR confirm that tests accounted for the applicable conditions having the potential to cause functional degradation of safety-related system's performance.
7a. Criterion 4.9, Identification of the methods used to determine reliability of the safety system design: The software project's design bases list the methods and any qualitative and quantitative reliability goals used to assess the reliability of the safety-related system design.	Inspection of the software project design phase summary BRR will be performed of the applicable qualitative and quantitative reliability goals. {{Design Acceptance Criteria}}	The software project design phase summary BRR identify that appropriate methods and qualitative and quantitative reliability goals were used to assess the reliability of the safety-related system design. {{Design Acceptance Criteria}}

Table 2.2.15-2

ITAAC For IEEE Std. 603 Compliance Confirmation

Design Commitment	Inspections, Tests, Analyses	Acceptance Criteria
7b. Criterion 4.9, Identification of the methods used to determine reliability of the safety system design: The as-built software project's design bases reconcile any changes to the list of the methods and any qualitative and quantitative reliability goals used to assess the reliability of the safety-related system design.	Inspection of the as-built software project installation phase summary BRR will be performed of the applicable qualitative and quantitative reliability goals.	The as-built software project installation phase summary BRR confirm that the applicable qualitative and quantitative reliability goals were met.
8a. Criterion 5.1, Single-failure criterion: The software project's design bases show compliance with the single-failure criterion.	Inspection of the software project's design phase summary BRR show that a Failures Mode and Effects Analysis (FMEA) have been completed. {{Design Acceptance Criteria}}	The software project design phase summary BRR show that a FMEA has been completed and show the software project's safety-related functions required for design basis events can be performed in the presence of: • Single detectable failures within safety-related systems concurrent with identifiable but non-detectable failures; • Failures caused by the single failure; and • Failures and spurious system actions that cause or are caused by the Design Basis Event (DBE) requiring the safety-related functions. {{Design Acceptance Criteria}}

Table 2.2.15-2

ITAAC For IEEE Std. 603 Compliance Confirmation

Design Commitment	Inspections, Tests, Analyses	Acceptance Criteria
8b. Criterion 5.1, Single-failure criterion: The as-built software projects comply with the results of the FMEA.	Inspection of the as-built software project's installation phase summary BRR will be performed to show that the as-built software project confirm with the results of the FMEA.	The as-built software project's installation phase summary BRR show that the as-built software project test results confirm the results of the FMEA.
9a1. Criteria 5.2 and 7.3, Completion of Protective Actions: The software projects are designed so that once initiated (automatically or manually), the intended sequences of safety-related functions of the execute features continue until completion.	Inspections of the software project design phase summary BRR verify that the design show "seal-in" features that are provided to enable system-level safety-related functions to go to completion. {{Design Acceptance Criteria}}	The software project design phase summary BRR show "seal-in" features. {{Design Acceptance Criteria}}
9a2. Criteria 5.2 and 7.3, Completion of Protective Actions: The software projects are designed so that after completion, deliberate operator action is required to return the safety-related systems to normal.	Inspections of the software project design phase summary BRR verifies that the design show "manual reset" features that are provided to require deliberate operator action to return the safety-related systems to normal. {{Design Acceptance Criteria}}	The software project design phase summary BRR show "manual reset" features. {{Design Acceptance Criteria}}
9b1. Criteria 5.2 and 7.3, Completion of Protective Actions: The as-built software projects ensure that once initiated (automatically or manually), the intended sequences of safety-related functions of the execute features continue until completion.	Inspections of the as-built software project installation phase summary BRR will be performed to show that test show that once initiated (automatically and manually), the intended sequences of safety-related functions of the "execute features" continue until completion.	The as-built software project installation phase summary BRR show that once initiated (automatically and manually), the intended sequences of safety-related functions of the "execute features" continue until completion.

Table 2.2.15-2

ITAAC For IEEE Std. 603 Compliance Confirmation

Design Commitment	Inspections, Tests, Analyses	Acceptance Criteria
9b2. Criteria 5.2 and 7.3, Completion of Protective Actions: The as-built software projects ensure that after completion, deliberate operator action is required to return the safety-related systems to normal.	Inspection of the as-built software project installation phase summary BRR will be performed to verify that tests of the "manual reset" features have been completed.	The as-built software project installation phase summary BRR show that "manual reset" features, after completion, return the safety-related systems to normal.
10a1. Criteria 5.6 and 6.3, Independence: The software projects have four independent, redundant divisions.	Inspection of the software project design phase summary BRR will be performed to verify that the design of the software project have four independent, redundant divisions. {{Design Acceptance Criteria}}	The software project design phase summary BRR show that the software projects have four independent, redundant divisions. {{Design Acceptance Criteria}}
10a2. Criteria 5.6 and 6.3, Independence: The software project's interdivisional communication systems have optically isolated fiber optic communication pathways.	Inspection of the software project design phase summary BRR will be performed to verify that the design of the software project's interdivisional communication systems have optically isolated fiber optic communication pathways. {{Design Acceptance Criteria}}	The software project design phase summary BRR show that the software project's interdivisional communication systems have optically isolated fiber optic communication pathways. {{Design Acceptance Criteria}}

Table 2.2.15-2

ITAAC For IEEE Std. 603 Compliance Confirmation

Design Commitment	Inspections, Tests, Analyses	Acceptance Criteria
10a3. Criteria 5.6 and 6.3, Independence: The software project's safety-related functions are performed independently of the existence and function of any nonsafety-related component, data, and communication channel.	Inspection of the software project design phase summary BRR will be performed to verify that the software project's safety-related functions are performed independently of the existence and function of any nonsafety-related component, data, and communication channel. {{Design Acceptance Criteria}}	The software project design phase summary BRR show that the software project' safety-related functions are performed independently of the existence and function of any nonsafety-related component, data, and communication channel. {{Design Acceptance Criteria}}
10b1. Criteria 5.6 and 6.3, Independence: The as-built software projects have four independent, redundant divisions.	Inspection of the as-built software project installation phase summary BRR will be performed to confirm that tests have been performed to show that the software project have four independent, redundant divisions.	The as-built software project installation phase summary BRR show that the as-built software project have four independent, redundant divisions.
10b2. Criteria 5.6 and 6.3, Independence: The as-built software project's interdivisional communication systems have optically isolated fiber optic communication pathways.	Inspection of the as-built software project installation phase summary BRR will be performed to confirm that tests have been performed to show that the software project's interdivisional communication systems have optically isolated fiber optic communication pathways.	The as-built software project installation phase summary BRR show that the as-built software project' interdivisional communication systems have optically isolated fiber optic communication pathways.

Table 2.2.15-2

ITAAC For IEEE Std. 603 Compliance Confirmation

Design Commitment	Inspections, Tests, Analyses	Acceptance Criteria
10b3. Criteria 5.6 and 6.3, Independence: The as-built software project's safety-related functions are performed independently of the existence and function of any nonsafety-related component, data, and communication channel.	Inspection of the as-built software project installation phase summary BRR will be performed to confirm that tests have been performed to show that the as-built software project's safety-related functions are performed independently of the existence and function of any nonsafety-related component, data, and communication channel.	The as-built software project installation phase summary BRR show that the as-built software project's safety-related functions are performed independently of the existence and function of any nonsafety-related component, data, and communication channel.
11a. Criteria 5.7 and 6.5, Capability for Test and Calibration: The software projects have maintenance bypasses that allow test and calibration of one out of four divisions while retaining their capability to accomplish their safety-related functions.	Inspection of the software project design phase summary BRR will be performed to verify that tests of the maintenance bypasses allows test and calibration of one out of four divisions while retaining their capability to accomplish their safety-related functions. {{Design Acceptance Criteria}}	The software project design phase summary BRR show that the maintenance bypasses allow test and calibration of one out of four divisions while retaining their capability to accomplish their safety-related functions. {{Design Acceptance Criteria}}
11b1. Criteria 5.7 and 6.5, Capability for Test & Calibration: The as-built software project's maintenance bypasses show that the divisions not in bypass status will accomplish their safety-related functions.	Inspection of the as-built software project installation phase summary BRR will be performed to confirm that tests have been performed to show that the design allows for trip and bypass of individual functions in each safety-related system division.	The as-built software project installation phase summary BRR confirm that test reports show that individual functions in each safety-related system division can be tripped and bypassed.

Table 2.2.15-2

ITAAC For IEEE Std. 603 Compliance Confirmation

Design Commitment	Inspections, Tests, Analyses	Acceptance Criteria
11b2. Criteria 5.7 and 6.5, Capability for Test & Calibration: The as-built software project's maintenance bypasses show that when one division is placed into maintenance bypass mode, the condition is alarmed in the MCR and the division logic automatically becomes a two-out-of-three voting scheme.	Inspection of the as-built software project installation phase summary BRR will be performed to confirm that tests have been performed to show that when one division is placed into maintenance bypass mode, the condition is alarmed in the MCR and the division logic automatically becomes a two-out-of-three voting scheme.	The as-built software project installation phase summary BRR confirm that when one division is placed into maintenance bypass mode, the condition is alarmed in the MCR and the division logic automatically becomes a two-out-of-three voting scheme.
12a. Criterion 5.9, Control of Access: The software projects are housed within cabinets with keylock doors, has keylock switches, and utilizes passwords that permit administrative control of access to safety-related system equipment.	Inspection of the software project design phase summary BRR will be performed to confirm that software project is housed within cabinets with keylock doors, has keylock switches, and utilizes passwords that permit administrative control of access to safety-related system equipment. {{Design Acceptance Criteria}}	The software project design phase summary BRR show that the software project is housed within cabinets with keylock doors, has keylock switches, and utilizes passwords that permit administrative control of access to safety-related system equipment. {{Design Acceptance Criteria}}
12b. Criterion 5.9, Control of Access: The as-built software projects are housed within cabinets with keylock doors, has keylock switches, and utilizes passwords that permit administrative control of access to safety-related system equipment.	Inspection of the as-built software project installation phase summary BRR will be performed to confirm that tests show the operation of the keylock doors, keylock switches, and passwords.	The as-built software project installation phase summary BRR confirm the operation of the keylock doors, keylock switches, and passwords.

Table 2.2.15-2

ITAAC For IEEE Std. 603 Compliance Confirmation

Design Commitment	Inspections, Tests, Analyses	Acceptance Criteria
13a. Criterion 5.10, Repair, The software projects have self-diagnostic features that facilitate the timely recognition, location, replacement, repair, and adjustment of malfunctioning equipment.	Inspection of the software project design phase summary BRR will be performed of the self-diagnostic features. {{Design Acceptance Criteria}}.	The software project design phase summary BRR confirm that the software project self-diagnostic functions locate failure to the component level. {{Design Acceptance Criteria}}
13b. Criterion 5.10, Repair, The as-built software projects have self-diagnostic features that facilitate the timely recognition, location, replacement, repair, and adjustment of malfunctioning equipment.	Inspection of the as-built software project installation phase summary BRR will be performed of the self-diagnostic features.	The as-built software project installation phase summary BRR confirm that test confirm that self-diagnostic functions locate failure to the component level.
14a. Criterion 5.11, Identification: The redundant portions of the software projects are distinctly identified.	Inspection of the software project design phase summary BRR will be performed to ensure that the software project's divisions are distinctly identified. {{Design Acceptance Criteria}}	The software project design phase summary BRR confirm that the software project's divisions are distinctly identified. {{Design Acceptance Criteria}}
14b. Criterion 5.11, Identification: The redundant portions of the as-built software projects are distinctly identified.	Inspection of the as-built software project installation phase summary BRR will be performed to confirm that the redundant portions of the as-built software projects are distinctly identified.	The as-built software project installation phase summary BRR confirm that the redundant portions of the as-built software projects are distinctly identified.

Table 2.2.15-2

ITAAC For IEEE Std. 603 Compliance Confirmation

Design Commitment	Inspections, Tests, Analyses	Acceptance Criteria
15a. Criterion 5.12, Auxiliary Features: Other auxiliary features cannot degrade the software project's performance below an acceptable level.	Inspection of the software project design phase summary BRR will be performed to confirm that the Criterion 5.1 FMEA verifies that the designs of other auxiliary features of the software project do not have failure modes that can degrade the software project' performance below an acceptable level. {{Design Acceptance Criteria}}	The software project design phase summary BRR show that the designs of other auxiliary features of the software project do not have failure modes that can degrade the software project's performance below an acceptable level. {{Design Acceptance Criteria}}
15b. Criterion 5.12, Auxiliary Features: Other auxiliary features cannot degrade the as-built software project's performance below an acceptable level.	Inspection of the as-built software project's installation phase summary BRR will be performed to show that the as-built software project confirm the results of the FMEA.	The as-built software project installation phase summary BRR show that the as-built software project test results confirm the results of the FMEA.
16a. Criteria 6.1 and 7.1, Automatic Control: The software projects provides the means to automatically initiate and control the required safety-related functions.	Inspection of the software project's design phase summary BRR will be performed to verify that the design has the capability to automatically initiate and control the required safety-related functions. {{Design Acceptance Criteria}}	The software project design phase summary BRR show that the design has the capability to automatically initiate and control the required safety-related functions. {{Design Acceptance Criteria}}

Table 2.2.15-2

ITAAC For IEEE Std. 603 Compliance Confirmation

Design Commitment	Inspections, Tests, Analyses	Acceptance Criteria
16b. Criteria 6.1 and 7.1, Automatic Control: The as-built software projects provide the means to automatically initiate and control the required safety-related functions.	Inspection of the as-built software project installation phase summary BRR will be performed to confirm that tests of the as-built software project, using simulated signals and actuators, automatically initiates and controls the required safety-related functions.	The as-built software project installation phase summary BRR confirm that tests of the as-built software automatically initiates and controls the required safety-related functions.
17a. Criteria 6.2 and 7.2, Manual Control: The software projects have features in the main control room to manually initiate and control the automatically initiated safety-related functions at the division level.	Inspection of the software project design phase summary BRR will be performed to verify that they show main control room features that are capable of manually initiating and controlling automatically initiated safety-related functions at the division level. {{Design Acceptance Criteria}}	The software project design phase summary BRR show main control room features that are capable of manually initiating and controlling automatically initiated safety-related functions at the division level. {{Design Acceptance Criteria}}
17b. Criteria 6.2 and 7.2, Manual Control: The as-built software projects have features in the main control room to manually initiate and control the automatically initiated safety-related functions at the division level.	Inspection of the as-built software project installation phase summary BRR will be performed to confirm that tests were performed to demonstrate that the as-built software projects have main control room features that manually initiate and control automatically initiated safety-related functions at the division level.	The as-built software project installation phase summary BRR confirm that tests of the as-built software projects using simulated signals and actuators show that the main control room features manually initiate and control automatically initiated safety-related functions at the division level.

Table 2.2.15-2

ITAAC For IEEE Std. 603 Compliance Confirmation

Design Commitment	Inspections, Tests, Analyses	Acceptance Criteria
18a. Criterion 6.4, Derivation of System Inputs: Sense and command feature inputs for the software projects are derived from signals that are direct measures of the desired variables specified in the design bases.	Inspection of the software project design phase summary BRR will be performed to ensure that the sense and command feature inputs for the software project are derived from signals that are direct measures of the desired variables specified in the design bases. {{Design Acceptance Criteria}}	The software project design phase summary BRR show that the sense and command feature inputs for the software project are derived from signals that are direct measures of the desired variables specified in the design bases. {{Design Acceptance Criteria}}
18b. Criterion 6.4, Derivation of System Inputs: Sense and command feature inputs for the as-built software projects are derived from signals that are direct measures of the desired variables specified in the design bases.	Inspection of the as-built software project installation phase summary BRR will be performed to confirm that the sense and command feature inputs for the as-built software project are derived from signals that are direct measures of the desired variables specified in the design bases.	The as-built software project installation phase summary BRR confirm that the sense and command feature inputs for the as-built software project are derived from signals that are direct measures of the desired variables specified in the design bases.
19.a1. Criteria 6.6 and 7.4, Operating Bypasses: The software projects automatically prevent the activation of an operating bypass, whenever the applicable permissive conditions for an operating bypass are not met.	Inspections of the software project design phase summary BRR will be performed to verify that the systems are capable of automatically preventing the activation of an operating bypass, whenever the applicable permissive conditions for an operating bypass are not met. {{Design Acceptance Criteria}}	The software project design phase summary BRR confirm that the systems are capable of automatically preventing the activation of an operating bypass, whenever the applicable permissive conditions for an operating bypass are not met. {{Design Acceptance Criteria}}

Table 2.2.15-2

ITAAC For IEEE Std. 603 Compliance Confirmation

Design Commitment	Inspections, Tests, Analyses	Acceptance Criteria
19.a2. Criteria 6.6 and 7.4, Operating Bypasses: The software projects automatically removes activated operating bypasses, if the plant conditions change so that an activated operating bypass is no longer permissible.	Inspection of the software project design phase summary BRR will be performed to verify that they show removal of activated operating bypasses, if the plant conditions change so that an activated operating bypass is no longer permissible. {{Design Acceptance Criteria}}	The software project design phase summary BRR confirm that the systems are removing activated operating bypasses, if the plant conditions change so that an activated operating bypass is no longer permissible. {{Design Acceptance Criteria}}
19.b1. Criteria 6.6 and 7.4, Operating Bypasses: The as-built software projects automatically prevent the activation of an operating bypass, whenever the applicable permissive conditions for an operating bypass are not met.	Inspection of the as-built software project installation phase summary BRR will be performed to confirm test results demonstrate that the software projects automatically prevent the activation of an operating bypass, whenever the applicable permissive conditions for an operating bypass are not met.	The as-built software project installation phase summary BRR confirm that test results demonstrate that the software projects automatically prevent the activation of an operating bypass, whenever the applicable permissive conditions for an operating bypass are not met.
19.b2. Criteria 6.6 and 7.4, Operating Bypasses: The as-built software projects show that they automatically removes activated operating bypasses, if the plant conditions change so that an activated operating bypass is no longer permissible.	Inspection of the as-built software project installation phase summary BRR will be performed to confirm test results demonstrate that the as-built software projects automatically remove activated operating bypasses, if the plant conditions change so that an activated operating bypass is no longer permissible.	The as-built software project installation phase summary BRR confirm that test results demonstrate that the as-built software projects automatically remove activated operating bypasses, if the plant conditions change so that an activated operating bypass is no longer permissible.

Table 2.2.15-2

ITAAC For IEEE Std. 603 Compliance Confirmation

Design Commitment	Inspections, Tests, Analyses	Acceptance Criteria
20a. Criteria 6.7, 7.5, and 8.3 Maintenance Bypasses: The software projects are capable of performing their safety-related functions, when one division is in maintenance bypass.	Inspections of the software project design phase summary BRR will be performed to verify that they are capable of performing their safety-related functions, when one division is in maintenance bypass. {{Design Acceptance Criteria}}	The software project design phase summary BRR show that they are capable of performing their safety-related functions, when one division is in maintenance bypass. {{Design Acceptance Criteria}}
20.b1. Criteria 6.7, 7.5, and 8.3, Maintenance Bypasses: The as-built software projects ensure that they are capable of performing their safety-related functions, when one division is in maintenance bypass.	Inspection of the as-built software project installation phase summary BRR will be performed to confirm that tests demonstrate that they perform their safety-related functions, when one division is in maintenance bypass.	The as-built software project installation phase summary BRR confirm that test results demonstrate that they perform their safety-related functions, when one division is in maintenance bypass.
20.b2. Criteria 6.7, 7.5, and 8.3, Maintenance Bypasses: The as-built software projects ensure that they are capable of performing their safety-related functions, when one power supply division is in maintenance bypass.	Inspection of the as-built software project installation phase summary BRR will be performed to confirm that tests demonstrate that they perform their safety-related functions, when one power supply division is in maintenance bypass.	The as-built software project installation phase summary BRR confirm that test results demonstrate that they perform their safety-related functions, when one power supply division is in maintenance bypass.
21a. Criterion 6.8, Setpoint: The software project's setpoints for safety-related functions are defined, determined and implemented based on a defined setpoint methodology.	Inspection of the software project design phase summary BRR will be performed to verify that a defined setpoint methodology exists. {{Design Acceptance Criteria}}	The software project design phase summary BRR show that a defined setpoint methodology exists. {{Design Acceptance Criteria}}

Table 2.2.15-2

ITAAC For IEEE Std. 603 Compliance Confirmation

Design Commitment	Inspections, Tests, Analyses	Acceptance Criteria
21b. Criterion 6.8, Setpoint: Any changes to the setpoints have been reconciled for the as-built software projects.	Inspection of the installation phase summary BRR setpoint analyses for the as-built software project will be performed to verify that the setpoints for safety-related functions are defined, determined and implemented based on a defined setpoint methodology.	The installation phase summary BRR setpoints for safety-related functions for the as-built software project were defined, determined and implemented using a defined setpoint methodology.
22a. Criterion 8.1, Power source requirements: The software project's electrical components receive power from their respective, divisional, safety-related power supplies.	Inspection of the software project design phase summary BRR will be performed to ensure that the software project's electrical components receive power from their respective, divisional, safety-related power supplies. {{Design Acceptance Criteria}}	The software project design phase summary BRR reference design documents that show that the software project's electrical components receive power from their respective, divisional, safety-related power supplies. {{Design Acceptance Criteria}}
22b. Criterion 8.1, Power source requirements: The as-built software project's as-built electrical components receive power from their respective, divisional, safety-related power supplies.	Inspection of the as-built software project' installation phase summary BRR will be performed to confirm that tests have been performed on the as-built software project's as-built electrical components by providing test signals in only one safety-related division at a time.	The as-built software project' installation phase summary BRR confirm that the as-built software project's as-built electrical components received test signals from a safety-related source in the same division.

Table 2.2.15-2

ITAAC For IEEE Std. 603 Compliance Confirmation

Design Commitment	Inspections, Tests, Analyses	Acceptance Criteria
23a. Criterion 8.2, Non-electrical Power Sources: The software project's actuators receive non-electric power from safety-related sources.	Inspection of the software project design phase summary BRR will be performed to ensure that safety-related systems and components that require non-electric power receive it from safety-related sources. {{Design Acceptance Criteria}}	The software project design phase summary BRR show that safety-related systems and components that require non-electric power receive it from safety-related sources. {{Design Acceptance Criteria}}
23b. Criterion 8.2, Non-electrical Power Sources: The as-built software project's actuators receive non-electric power from safety-related sources.	Inspection of the as-built software project's installation phase summary BRR will be performed to confirm that tests have been performed on the as-built software project's as-built mechanical installation of the as-built software project' actuators to show that non-electric power is received from safety-related sources.	The as-built software project' installation phase summary BRR confirm that the as-built software project's actuators receive non-electric power from safety-related sources.

2.2.16 High Pressure Control Rod Drive Isolation Bypass Function Independent Control Platform

Design Description

The HP CRD Isolation Bypass Function Independent Control Platform (ICP) automatically bypasses the CRD hydraulic subsystem high pressure makeup water injection isolation function by using isolation bypass valves.

HP CRD Isolation Bypass Function ICP alarms, displays, and status indications in the MCR are addressed by Section 3.3.

The environmental and seismic qualification of HP CRD Isolation Bypass Function ICP components defined in Table 2.2.16-1 are addressed in Section 3.8.

Conformance with IEEE Std. 603 requirements by the safety-related control system structures, systems, or components defined in Table 2.2.16-1 is addressed in Subsection 2.2.15.

HP CRD Isolation Bypass Function ICP software is developed in accordance with the software development program described in Section 3.2 as part of the HP CRD Isolation Bypass Function software projects.

(1) HP CRD Isolation Bypass Function ICP functional arrangement is as described in Subsection 2.2.16 and Table 2.2.16-1.

(2) HP CRD Isolation Bypass Function ICP provides automatic functions and initiators as described in Table 2.2.16-2.

(3) HP CRD Isolation Bypass Function ICP provides controls, interlocks, and bypasses as described in Table 2.2.16-3.

(4) Divisional HP CRD Isolation Bypass Function ICP safety-related power supplies power the HP CRD Isolation Bypass Function ICP divisional loads.

(5) PIP power supplies power their respective HP CRD isolation bypass valves.

Inspections, Tests, Analyses, and Acceptance Criteria

Table 2.2.16-4 defines the inspections, tests, and analyses, together with associated acceptance criteria for the HP CRD Isolation Bypass Function ICP.

Table 2.2.16-1

HP CRD Isolation Bypass Function ICP Functional Arrangement

HP CRD Isolation Bypass Function ICP is a four division, redundant, logic controller.
HP CRD Isolation Bypass Function ICPs are located in divisionally separate rooms in the Control Building (CB) and Reactor Building (RB).

Table 2.2.16-2

HP CRD Isolation Bypass Function ICP

Automatic Functions, Initiators, and Associated Interfacing Systems

Function	Initiator	Interfacing System
ADS Initiation Detection	RPV Water Level Low (Level 1) Drywell Pressure High and Time Delay	NBS CMS
Permissive to open HP CRD isolation bypass valve	ADS Initiation Detection and Time Delay and GDCS Pool level not low	CMS, GDCS, NBS

Table 2.2.16-3

HP CRD Isolation Bypass Function ICP Controls, Interlocks, and Bypasses

MCR Parameter	Description
Control	Manual close (one for each HP CRD isolation bypass valve) (permissive only) Manual open (one for each HP CRD isolation bypass valve) (permissive only)
Interlock	None
Bypass	HP CRD Isolation Bypass Function ICP division of sensors bypass (one for each division)

Table 2.2.16-4

ITAAC For The HP CRD Isolation Bypass Function ICP

Design Commitment	Inspections, Tests, Analyses	Acceptance Criteria
1. HP CRD Isolation Bypass Function ICP functional arrangement is as described in Subsection 2.2.16 and Table 2.2.16-1.	Inspection(s) will be performed on the as-built configuration.	The system conforms to the functional arrangement as described in Subsection 2.2.16 and Table 2.2.16-1.
2. HP CRD Isolation Bypass Function ICP provides automatic functions and initiators as described in Table 2.2.16-2.	Test(s) will be performed on the as-built HP CRD Isolation Bypass Function ICP using simulated signals and actuators for the automatic functions defined in Table 2.2.16-2.	The HP CRD Isolation Bypass Function ICP performs the automatic functions defined in Table 2.2.16-2.
3. HP CRD Isolation Bypass Function ICP provides controls, interlocks, and bypasses as described in Table 2.2.16-3.	Test(s) will be performed on the as-built HP CRD Isolation Bypass Function ICP using simulated signals and actuators for the controls, interlocks, and bypasses defined in Table 2.2.16-3.	The system controls, interlocks and bypasses exist, can be retrieved in the main control room, and are performed in response to simulated signals.
4. Divisional HP CRD Isolation Bypass Function ICP safety-related power supplies power the HP CRD Isolation Bypass Function ICP divisional loads.	Test(s) will be performed on each as-built HP CRD Isolation Bypass Function ICP division by providing a test signal in only one safety-related division at a time	The test signal exists only at the terminals of the respective divisional HP CRD Isolation Bypass Function loads.
5. PIP power supplies power their respective HP CRD isolation bypass valves.	Test(s) will be performed on the power supply to each as-built HP CRD isolation bypass valve by introducing a test signal.	The test signal exists only at the respective PIP power supply.

2.3 RADIATION MONITORING SYSTEMS

The following subsections describe the major radiation monitoring systems for the ESBWR.

2.3.1 Process Radiation Monitoring System

Design Description

The Process Radiation Monitoring System (PRMS) monitors and provides for indication of radioactivity levels in process and effluent gaseous and liquid streams, initiates protective actions, and activates alarms in the MCR on high radiation signals. Alarms are also activated when a monitor becomes inoperative or goes upscale/downscale. The PRMS safety-related channel trip signals are provided as inputs to the Safety System Logic and Control/Engineered Safety Features (SSLC/ESF) for generation of protective action signals.

PRMS subsystem software is developed in accordance with the software development program described in Section 3.2.

The environmental qualification of PRMS equipment is addressed in Section 3.8.

Refer to Subsection 2.2.15 for "Instrumentation and Controls Compliance with IEEE Standard 603."

(1) The PRMS functional arrangement is as described in the Design Description of this Subsection 2.3.1, Figure 2.3.1-1, and Table 2.3.1-1.

(2) a. The safety-related PRMS subsystems as identified in Table 2.3.1-1 are powered from uninterruptible safety-related power sources.

b. The safety-related divisions of electric power for the PRMS subsystems identified in Table 2.3.1-1 are physically separated.

(3) The safety-related process radiation monitors listed in Table 2.3.1-1 can withstand Seismic Category I loads without loss of safety function.

(4) Safety-related PRMS subsystems provide the following:

- Indications in MCR for radiation levels
- Indications on SCUs for radiation levels
- Alarms in MCR on radiation level exceeding setpoint
- Indications on Signal Conditioning Units (SCUs) on radiation level exceeding setpoint
- Alarms in MCR on upscale/downscale or inoperative conditions
- Initiation of protective actions as noted in Table 2.3.1-1

(5) The nonsafety-related process monitors listed in Table 2.3.1-1 are provided.

(6) Safety-related PRMS subsystems initiate preventive actions to isolate or terminate plant processes or effluent releases as described in Table 2.3.1-1.

(7) The nonsafety-related PRMS subsystem monitors which perform active/automatic control functions in order to control offsite doses below 10 CFR 20 limits provide the following:

- Indications in MCR for radiation levels
- Alarms in MCR on radiation level exceeding setpoint
- Alarms in MCR on upscale/downscale or inoperative conditions.

(8) (Deleted)

Inspections, Tests, Analyses, and Acceptance Criteria

Table 2.3.1-2 provides a definition of the inspections, tests and analyses, together with the associated acceptance criteria for the PRMS. As appropriate, each of the ITAAC in Section 2.3.1 may be closed on a system-by-system basis throughout construction, in order that the PRMS subsystems may be placed in service. ITAAC for the liquid radwaste discharge radiation monitor and offgas post-treatment radiation monitor also are located in Table 2.10.1-2 and Table 2.10.3-1, respectively.

Table 2.3.1-1

Process Radiation Monitors (Shown on Figure 2.3.1-1)

ID on Figure 2.3.1-1	Safety-Related and Seismic Category I	Description	Safety Function
1	No	MSL	
2	Yes	Reactor Building HVAC Exhaust	Continuously monitors gross gamma quantity of radioactivity being exhausted from the contaminated area served by Reactor Building Contaminated Area (HVAC) Subsystem. The discharge point from duct is monitored with four physically and electrically independent and redundant divisions. In the event of radioactive releases due to system failures in the Reactor Building, or due to a fuel handling accident, RBVS dampers are closed, and exhaust fans are stopped.
3	Yes	Refuel Handling Area HVAC Exhaust	Continuously monitors gamma radiation levels in exhaust plenum of HVAC exhaust ducts in Refuel Handling Area of Reactor Building with four divisions of Radiation Detection Assemblies and channels. In the event of a radioactive release due to an accident while handling spent fuel, Reactor Building HVAC (RBVS) dampers are closed and exhaust fans are stopped.

Table 2.3.1-1

Process Radiation Monitors (Shown on Figure 2.3.1-1)

ID on Figure 2.3.1-1	Safety-Related and Seismic Category I	Description	Safety Function
4A	Yes	Control Room Habitability Area HVAC Subsystem (CRHAVS)	The Radiation Detection Assembly continuously monitors the gamma radiation levels from air intake plenum for the building or area containing the MCR and auxiliary rooms. The Control Room outside air intake is secured and the emergency air filtration units are started in the event of a high radiation level.
4B, 4C	Yes	CRHAVS Emergency Filter Unit (EFU)	Instrument interfaces with safety-related control and logic system.
5	No	TB Normal Ventilation Air HVAC	
6	No	TB Compartment Area Air HVAC	
7	No	Offgas Pre-treatment	
8	No	Charcoal Vault Ventilation	
9A, 9B	No	Offgas Post-treatment	
10	No	TB Combined Ventilation Exhaust	
11	No	Liquid Radwaste Discharge	
12	No	LCW DW Sump Discharge HCW DW Sump Discharge	
13A	No	RB/FB Stack	

Table 2.3.1-1

Process Radiation Monitors (Shown on Figure 2.3.1-1)

ID on Figure 2.3.1-1	Safety-Related and Seismic Category I	Description	Safety Function
13B	No	TB Stack	
13C	No	RW Stack	NA
14	No	Main Turbine Gland Seal Steam Condenser Exhaust	NA
15A, 15B	No	Reactor Component Cooling Water Intersystem Leakage	NA
16	No	DW Fission Product	NA
17	No	Radwaste Building Ventilation Exhaust	NA
18	No	FB Combined Ventilation Exhaust	NA
19	Yes	Isolation Condenser Vent Exhaust	Continuously monitors the four Isolation Condenser Discharge Vents for gross gamma radiation by sixteen local detectors (four per isolation condenser vent). High radiation in the exhaust of a vent results in isolation of the affected Isolation Condenser loop.
20	No	TSC HVAC Air Intake	NA
21	Yes	FB General Area HVAC	Monitors the gross gamma radiation level in Fuel Building HVAC exhaust duct for the general area. In the event of an abnormal radioactivity release, Fuel Building HVAC exhaust dampers are closed and fans are stopped.

Table 2.3.1-1

Process Radiation Monitors (Shown on Figure 2.3.1-1)

ID on Figure 2.3.1-1	Safety-Related and Seismic Category I	Description	Safety Function
22	Yes	FB Fuel Pool HVAC	Monitors the gamma radiation level of air exiting spent fuel pool and equipment areas. In the event of radioactive releases due to an accident while handling spent fuel, Fuel Building HVAC exhaust dampers are closed and fans are stopped.
23	Yes	Containment Purge Exhaust	Monitors gross radiation level in exhaust duct leading from the containment. In the event of radioactive releases, monitors initiate closure of ventilation isolation dampers prior to exceeding radioactive effluent limits. In addition to closure of the RBVS isolation dampers, the RB HVAC exhaust fans are stopped.

Table 2.3.1-2

ITAAC For The Process Radiation Monitoring System

Design Commitment	Inspections, Tests, Analyses	Acceptance Criteria
1. The PRMS functional arrangement is as described in the Design Description of this Subsection 2.3.1, Figure 2.3.1-1, and Table 2.3.1-1.	Inspections shall be conducted on each as-built PRMS subsystem.	The as-built PRMS subsystems conform to the functional arrangement as described in the Design Description of this Subsection 2.3.1 and shown in Figure 2.3.1-1 in conjunction with Table 2.3.1-1.
2a. The safety-related PRMS subsystems as identified in Table 2.3.1-1 are powered from uninterruptible safety-related power sources.	Inspections will be conducted to confirm that the PRMS safety-related subsystems identified in Table 2.3.1-1 are powered from uninterruptible safety-related power sources.	The safety-related PRMS subsystems identified in Table 2.3.1-1 receive electrical power from uninterruptible safety-related buses.
2b. The safety-related divisions of electric power for the PRMS subsystems identified in Table 2.3.1-1 are physically separated.	Inspections of the as-built divisions will be conducted.	Each subsystem division is physically separated from the other division in accordance with RG 1.75.
3. The equipment identified in Table 2.3.1-1 as Seismic Category I can withstand Seismic Category I loads without loss of safety function.	i. Inspection will be performed to verify that the Seismic Category I equipment identified in Table 2.3.1-1 are located in a Seismic Category I structure.	i. The equipment identified as Seismic Category I in Table 2.3.1-1 is located in a Seismic Category I structure.

Table 2.3.1-2

ITAAC For The Process Radiation Monitoring System

Design Commitment	Inspections, Tests, Analyses	Acceptance Criteria
	ii. Type tests, analyses, or a combination of type tests and analyses, of equipment identified in Table 2.3.1-1 as Seismic Category I, will be performed using analytical assumptions, or will be performed under conditions which bound the Seismic Category I equipment design requirements.	ii. The equipment identified in Table 2.3.1-1 as Seismic Category I can withstand Seismic Category I loads without loss of safety function.
	iii. Inspections and analyses will be performed to verify that the as-built equipment identified in Table 2.3.1-1, including anchorage, is bounded by the testing or analyzed conditions.	iii. The as-built equipment identified in Tables 2.3.1-1 including anchorage, can withstand Seismic Category II loads without loss of safety function.

Table 2.3.1-2

ITAAC For The Process Radiation Monitoring System

Design Commitment	Inspections, Tests, Analyses	Acceptance Criteria
4. Safety-related PRMS subsystems provide the following: • Indications in MCR for radiation levels • Indications on SCUs for radiation levels • Alarms in MCR on radiation level exceeding setpoint • Indications on SCUs on radiation level exceeding setpoint • Alarms in MCR on upscale/downscale or inoperative conditions • Initiation of actions described in Table 2.3.1-1	Tests will be conducted by using a standard radiation source or portable calibration unit that exceeds a setpoint value that is preset for the testing to confirm that the as-built indications, alarms, and automatic initiation functions are met as described in Table 2.3.1-1.	The as-built indications, alarms, and automatic initiation functions are met as described in Table 2.3.1-1, considering the following: • Indications in MCR for radiation levels • Indications on SCUs for radiation levels • Alarms in MCR on radiation level exceeding setpoint • Indications on SCUs on radiation level exceeding setpoint • Alarms in MCR on upscale/downscale or inoperative conditions • Initiation of actions described in Table 2.3.1-1
5. The nonsafety-related process monitors listed in Table 2.3.1-1 are provided.	Inspection for the existence of the monitors will be performed.	The nonsafety-related monitors exist.
6. Safety-related PRMS subsystems initiate preventive actions to isolate or terminate plant processes or effluent releases as described in Table 2.3.1-1.	Tests will be conducted to confirm that the preventive actions are initiated and proper isolation or termination are secured on simulated high radiation levels. These tests will be performed in conjunction with each subsystem that contains the isolation boundaries.	The preventive actions requirements are met as described in Table 2.3.1-1.

Table 2.3.1-2

ITAAC For The Process Radiation Monitoring System

Design Commitment	Inspections, Tests, Analyses	Acceptance Criteria
7. The nonsafety-related PRMS subsystem monitors which perform active/automatic control functions in order to control offsite doses below 10 CFR 20 limits provide the following: • Indications in MCR for radiation levels • Alarms in MCR on radiation level exceeding setpoint • Alarms in MCR on upscale/downscale or inoperative conditions	Tests will be conducted by using a standard radiation source or portable calibration unit that exceeds a setpoint value that is preset for the testing to confirm that the as-built indication, alarm, and automatic initiation functions are met.	The as-built indication, alarm, and automatic initiation functions are met.
8. (Deleted)		

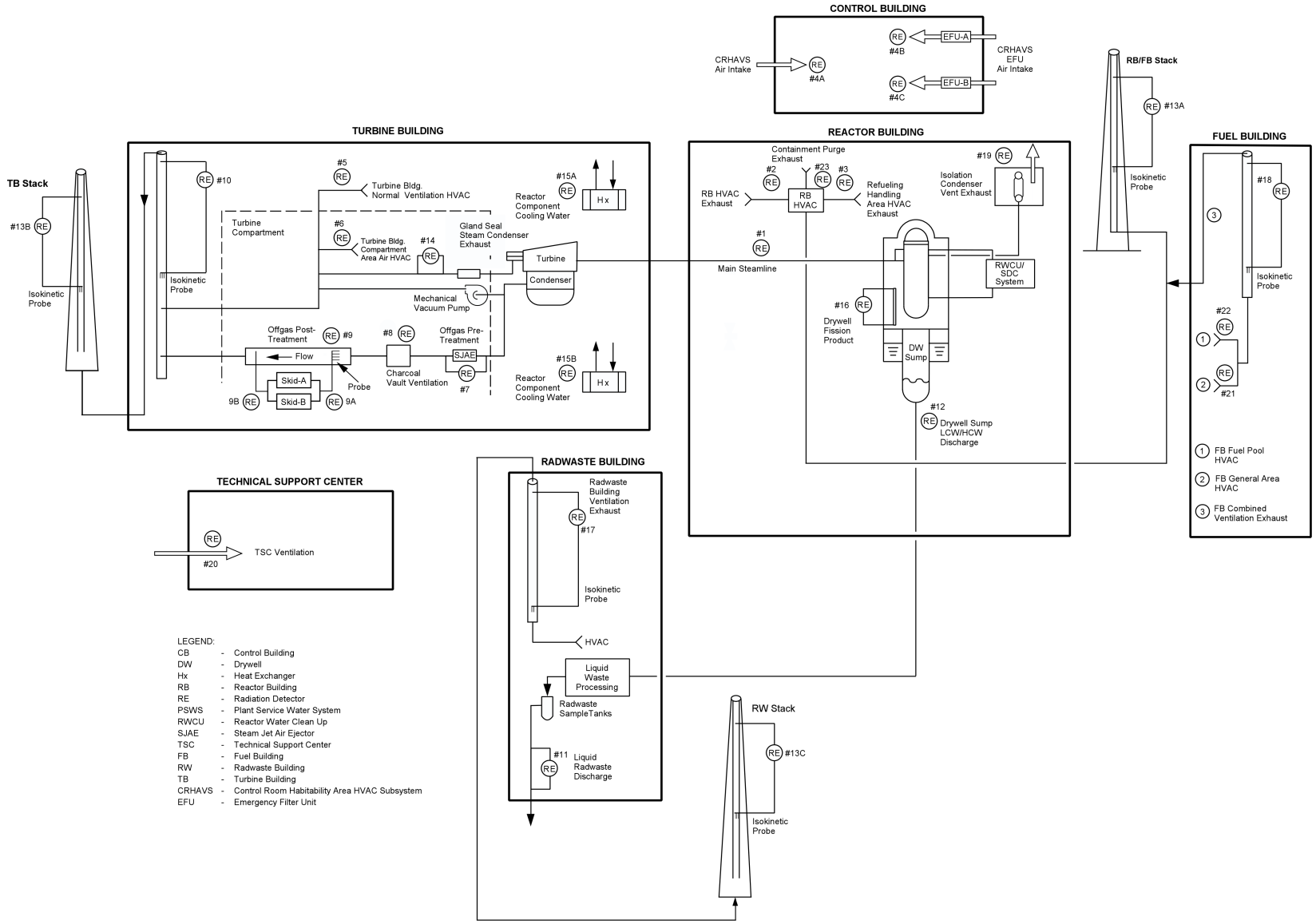

Note: See Table 2.3.1-1 for radiation detector numbers.

Figure 2.3.1-1. Process Radiation Monitoring System Diagram

2.3.2 Area Radiation Monitoring System

Design Description

The Area Radiation Monitoring System (ARMS) continuously monitors the gamma radiation levels within the various areas of the plant and provides an early warning to operating personnel when high radiation levels are detected so the appropriate action can be taken to minimize occupational exposure.

(1) The functional arrangement (location) of the ARMS equipment is described in Subsection 2.3.2 and as listed on Table 2.3.2-1.

(2) Each ARM channel listed in Table 2.3.2-1 initiates a MCR alarm and a local audible alarm (if provided) when the radiation level exceeds a preset limit.

(3) Each ARM channel listed in Table 2.3.2-1 is provided with indication of radiation level.

Inspections, Tests, Analyses, and Acceptance Criteria

Table 2.3.2-2 provides a definition of the inspections, tests, and analyses, together with associated acceptance criteria for the Area Radiation Monitoring System.

Table 2.3.2-1

ARM Locations

Area	Description & Location
Reactor Building	RB Refueling Floor Area #1
Reactor Building	RB Refueling Floor Area #2
Reactor Building	RB New Fuel Buffer Pool
Reactor Building	RB New Fuel Buffer Pool
Reactor Building	RB RWCU/SDC Pump
Reactor Building	RB Sump Pumps
Reactor Building*	RB RWCU/SDC Train A Heat Exchanger
Reactor Building*	RB RWCU/SDC Train B Heat Exchanger
Reactor Building	RB Lower Equipment Hatch
Reactor Building	RB Lower Personnel Hatch
Reactor Building	FMCRD HCU Room B
Reactor Building	FMCRD HCU Room D
Reactor Building	RB RWCU/SDC Filter Demineralizer Area
Reactor Building	RB Radiological Control Area Entrance
Reactor Building	RB H2/O2 Monitoring (CMS) Skid
Reactor Building	RB H2/O2 Monitoring (CMS) Skid Panel
Reactor Building	Instrument Rack Area #1
Reactor Building	Instrument Rack Area #2
Reactor Building	Instrument Rack Area #3
Reactor Building	Instrument Rack Area #4
Reactor Building	Instrument Rack Area #5
Reactor Building	Instrument Rack Area #6
Reactor Building	Instrument Rack Area #7
Reactor Building	Instrument Rack Area #8
Reactor Building	RB IFTS Maintenance Room (Multiple)
Reactor Building	Fuel Handling Machine
Reactor Building	RB Remote Shutdown Panel A Area
Reactor Building	RB Remote Shutdown Panel B Area
Fuel Building	FB Spent Fuel Floor
Fuel Building	Fuel Handling Machine

Table 2.3.2-1
ARM Locations

Area	Description & Location
Fuel Building	FB Fuel Transfer Cask Area
Fuel Building	FB FAPCS Heat Exchangers
Fuel Building	FB FAPCS Heat Exchangers
Fuel Building*	FB FAPCS Backwash Transfer Pumps
Fuel Building	FB Sump Pumps
Fuel Building	RB Ground Grade Access Pathway
Fuel Building	FB Wash Down Bay Entry Door
Fuel Building	FB IFTS Fuel Bldg Isolation Valve Room (Inside)
Fuel Building	Fuel Prep Machine
Radwaste Building	RW Electrical Panel Area
Radwaste Building	RW Control Room
Radwaste Building	RW Resin Pump
Radwaste Building	RW Resin Transfer Pump Room
Radwaste Building	RW Trailer Access Area
Radwaste Building*	RW Liquid Radioactive Waste Treatment Area
Radwaste Building*	RW Wet Solid Radioactive Waste Treatment Area
Radwaste Building*	RW Dry Solid Waste Treatment Area
Radwaste Building*	RW Packaged Waste Staging Area
Turbine Building*	Main Condenser Vault Area
Turbine Building*	Feedwater Heater Drain Cooler 1 A/B/C Room
Turbine Building	H2 and O2 Analyzer Room B
Turbine Building	Condensate Pumps Room
Turbine Building*	Low Pressure Heater Area
Turbine Building*	Feedwater Heater 4 and Feedwater Storage Tank Room
Turbine Building*	Turbine Bldg Steam Tunnel
Turbine Building*	Condensate Drain Tank and Steam Jet Air Ejector/H2 Recombiner and Cooler Room B
Turbine Building*	Steam Jet Air Ejector/H2 Recombiner and Cooler Room A
Turbine Building*	Feedwater Heater 5B and 6B Room
Turbine Building	Condensate Filter Access Hatch Room
Turbine Building	Corridor/Turbine Building Operating Floor

Table 2.3.2-1

ARM Locations

Area	Description & Location
Turbine Building	Corridor/Turbine Operating Floor
Turbine Building	Crane Travel Area
Turbine Building	Equipment Main Access Area
Turbine Building	RCCWS Pump/Exchanger Room A
Turbine Building*	Offgas Charcoal Adsorber Vessel Vault
Turbine Building	Condensate Pleated Filter Valve/Condensate Filter Transfer Pumps/condensate Flow Control Valve Station Room
Turbine Building	Condensate Pleated Filter Valve/Condensate Filter Transfer Pumps/Condensate Flow Control Valve Station Room
Turbine Building	Condenser Sampling Pump Room A
Turbine building	Condenser Sampling Pump Room B
Turbine Building	Condensate Deep Bed Demineralizer Valve Room
Turbine Building	H2 and O2 Analyzer Room A
Turbine Building*	Feedwater Heater 5A and 6A Room
Turbine Building*	Feedwater heater 7B Room
Turbine Building*	Feedwater Heater 7A Room
Turbine Building	Turbine Bldg Sampling/Drain Sump C Room
Turbine Building	Corridor/Exhaust Duct Area
Turbine Building	RCCWS Pump/Exchanger Room B
Turbine Building*	Main Condenser Vault Area
Control Building	Main Control Room

* ARMs located in accessible areas where abnormal plant evolutions or anticipated operational occurrences can potentially result in dose rate increases of 1mSv/hr (100mRem/hr) or more.

Table 2.3.2-2

ITAAC For Area Radiation Monitoring System

Design Commitment	Inspections, Tests, Analyses	Acceptance Criteria
1. The functional arrangement (location) of the ARMS equipment is as described in Subsection 2.3.2 and as listed on Table 2.3.2-1.	Inspection of the as-built system will be conducted.	The as-built ARM system locations conform to Subsection 2.3.2 and Table 2.3.2-1.
2. Each ARM channel listed in Table 2.3.2-1 initiates a MCR alarm and a local audible alarm (if provided) when the radiation level exceeds a preset limit.	Tests will be conducted using a simulated high radiation level signal to verify that the MCR alarm and local alarm (if provided) are on when the simulated signal exceeds a preset setpoint.	The MCR alarm and local audible alarm (if provided) are initiated when the simulated radiation level exceeds a preset limit.
3. Each ARM channel listed in Table 2.3.2-1 is provided with indication of radiation level.	Tests will be conducted using a simulated high radiation signal to verify that the indications for each ARM channel responds to the simulated high radiation signal.	The indications for each ARM channel responds to the simulated high radiation signal.

2.4 CORE COOLING SYSTEMS USED FOR ABNORMAL EVENTS

The following subsections describe the core cooling systems in response to Abnormal Operating Occurrences (AOOs) and accidents.

2.4.1 Isolation Condenser System

Design Description

The Isolation Condenser System (ICS) removes decay heat from the RPV when the reactor is isolated. Decay heat removal keeps the RPV pressure below the SRV pressure setpoint. ICS consists of four independent trains, each containing a heat exchanger that condenses steam on the tube side and transfers heat by heating and boiling water in the Isolation Condenser/Passive Containment Cooling System (IC/PCCS) pools, which is then vented to the atmosphere. The ICS is as shown in Figure 2.4.1-1.

The environmental qualification of ICS components is addressed in Section 3.8; and the environmental and seismic qualification of digital instrumentation and controls equipment is addressed in Section 3.8.

The containment isolation portions of the ICS are addressed in Subsection 2.15.1.

ICS software is developed in accordance with the software development program described in Section 3.2.

Conformance with IEEE Standard 603 requirements by the safety-related control system structures, systems, or components is addressed in Subsection 2.2.15.

The ICS alarms, displays, controls, and status indications in the main control room are addressed in Section 3.3.

(1) The functional arrangement of the ICS is as described in the Design Description of this Subsection 2.4.1, Table 2.4.1-1, Table 2.4.1-2, and as shown in Figure 2.4.1-1.

(2) a1. The components identified in Table 2.4.1-1 as ASME Code Section III are designed in accordance with ASME Code Section III requirements.

a2. The components identified in Table 2.4.1-1 as ASME Code Section III shall be reconciled with the design requirements.

a3. The components identified in Table 2.4.1-1 as ASME Code Section III are fabricated, installed, and inspected in accordance with ASME Code Section III requirements.

b1. The piping identified in Table 2.4.1-1 as ASME Code Section III is designed in accordance with ASME Code Section III requirements.

b2. The as-built piping identified in Table 2.4.1-1 as ASME Code Section III shall be reconciled with the piping design requirements.

b3. The piping identified in Table 2.4.1-1 as ASME Code Section III is fabricated, installed, and inspected in accordance with ASME Code Section III requirements.

(3) a. Pressure boundary welds in components identified in Table 2.4.1-1 as ASME Code Section III meet ASME Code Section III non-destructive examination requirements.

b. Pressure boundary welds in piping identified in Table 2.4.1-1 as ASME Code Section III meet ASME Code Section III non-destructive examination requirements.

(4) a. The components identified in Table 2.4.1-1 as ASME Code Section III retain their pressure boundary integrity at their design pressure.

b. The piping identified in Table 2.4.1-1 as ASME Code Section III retains its pressure boundary integrity at its design pressure.

(5) The equipment identified in Table 2.4.1-1 and Table 2.4.1-2 as Seismic Category I can withstand Seismic Category I loads without loss of safety function.

(6) a. Each of the ICS divisions (or safety-related loads/components) identified in Table 2.4.1-2 is powered from its respective safety-related division.

b. In the ICS, independence is provided between safety-related divisions, and between safety-related divisions and non-safety related equipment.

(7) a. Each mechanical train of the ICS located outside the containment is physically separated from the other train(s) so as not to preclude accomplishment of the intended safety-related function.

b. Each mechanical train of the ICS located inside the containment is physically separated from the other train(s) so as not to preclude accomplishment of the intended safety-related function.

(8) (Deleted)

(9) Re-positionable (NOT squib) valves designated in Table 2.4.1-1 open, close, or both open and close, under differential pressure, fluid flow, and temperature conditions.

(10) The pneumatically operated valve(s) designated in Table 2.4.1-1 fail in the mode listed if either electric power to the valve actuating solenoid is lost, or pneumatic pressure to the valve(s) is lost.

(11) (Deleted)

(12) (Deleted)

(13) Each condensate return valve, listed in Table 2.4.1-1, opens to initiate the ICS.

(14) The normally open ICS isolation valves in the steam supply and condensate return lines, listed in Table 2.4.1-1, close automatically on receipt of high vent line radiation from the Process Radiation Monitoring System (PRMS).

(15) The normally open ICS isolation valves in the steam supply and condensate return lines, listed in Table 2.4.1-1, close automatically on receipt of signals from the LD&IS.

(16) Each ICS train normally closed condensate return valve, listed in Table 2.4.1-1, opens upon receipt of the following automatic actuation signals:

- RPV high pressure following a time delay
- RPV water level below level 2 following a time delay
- RPV water level below level 1

- Loss of power to 2 of 4 reactor feed pumps with the reactor mode switch in RUN
- MSIVs in 2 of 4 steam lines less than fully open with the reactor mode switch in RUN

(17) Each ICS train normally closed condensate return bypass valve, listed in Table 2.4.1-1, opens upon receipt of the following automatic actuation signals:

- RPV high pressure following a time delay
- RPV water level below level 2 following a time delay
- RPV water level below level 1
- Loss of power to 2 of 4 reactor feed pumps with the reactor mode switch in RUN
- MSIVs in 2 of 4 steamlines less than fully open with the reactor mode switch in RUN.

(18) The two-series, solenoid-operated lower vent line valves, listed in Table 2.4.1-1, open on high RPV pressure after time delay following condensate return or condensate bypass valve opening signals.

(19) The three vent lines with two-series, solenoid-operated upper and lower vent line valves, listed in Table 2.4.1-1, open on manual actuation only if condensate return or condensate bypass valve is not closed.

(20) The accumulators for the pneumatic isolation valves, shown in Table 2.4.1-1, in the ICS steam supply and condensate return valves have the capacity to close the valves three times with the DW at the DW design pressure.

(21) Upon loss of pneumatic pressure to the condensate bypass valve (V-6), the valve strokes to the fully open position.

(22) Each ICS train has at least the minimum heat removal capacity assumed in analysis of Abnormal Events with reactor at or above normal operating pressure.

(23) Each ICS train provides at least the minimum drainable liquid volume available for return to the RPV assumed in analysis of Abnormal Events.

(24) The Equipment Pool and Reactor Well provide sufficient makeup water volume to the IC/PCCS expansion pool to support operation of the ICS and PCCS for the first 72 hours.

(25) The IC/PCCS pools are safety-related and Seismic Category I.

(26) Each ICS flow path is constrained to a maximum flow area at transitions between Class 1 piping from containment to Class 2 piping outside containment in order to limit flow in the event of a break.

(27) (Deleted)

(28) (Deleted)

(29) a. Valves on lines attached to the RPV that require maintenance have maintenance valves such that freeze seals will not be required.

b. The as-built location of valves on lines attached to the RPV that require maintenance shall be reconciled to design requirements.

Inspections, Tests, Analyses, and Acceptance Criteria

Table 2.4.1-3 provides a definition of the inspections, test and analyses, together with associated acceptance criteria for the Isolation Condenser System.

Table 2.4.1-1

ICS Mechanical Equipment

Equipment Name (Description)	Equipment Identifier See Figure 2.4.1-1	ASME Code Section III	Seismic Cat. I	RCPB Component	Containment Isolation Valve	Remotely Operated	Loss of Motive Power Position
Train A Isolation Condenser	–	–	–	–	–	–	–
IC (A) Heat Exchanger	–	Yes	Yes	No	–	–	–
Inline Vessel (A)	–	Yes	Yes	Yes	–	–	–
IC (A) Steam Supply Line	P-1(A)	Yes	Yes	Yes	–	–	–
IC (A) Steam Supply Line Isolation Valve	V–1(A)	Yes	Yes	Yes	Yes	Yes	As-Is
IC (A) Steam Supply Line Isolation Valve	V-2(A)	Yes	Yes	Yes	Yes	Yes	As-Is
IC (A) Condensate Return Line	P-2(A)	Yes	Yes	Yes	No	–	–
IC (A) Condensate Return Line Isolation Valve	V-3(A)	Yes	Yes	Yes	Yes	Yes	As-Is
IC (A) Condensate Return Line Isolation Valve	V-4(A)	Yes	Yes	Yes	Yes	Yes	As-Is
IC (A) Condensate Return Line Valve	V-5(A)	Yes	Yes	Yes	No	Yes	As-Is
IC (A) Condensate Return Line Bypass Valve	V-6(A)	Yes	Yes	Yes	No	Yes	Open
Upper IC (A) Header Vent Line	–	Yes	Yes	No	–	–	–
Upper IC (A) Header Vent Line Valve	V-7(A)	Yes	Yes	No	Yes	Yes	Closed
Upper IC (A) Header Vent Line Valve	V-8(A)	Yes	Yes	No	Yes	Yes	Closed
Lower IC (A) Header Vent Line	–	Yes	Yes	No	–	–	–

Table 2.4.1-1

ICS Mechanical Equipment

Equipment Name (Description)	Equipment Identifier See Figure 2.4.1-1	ASME Code Section III	Seismic Cat. I	RCPB Component	Containment Isolation Valve	Remotely Operated	Loss of Motive Power Position
Lower IC (A) Header Vent Line Valve	V-9(A)	Yes	Yes	No	Yes	Yes	Closed
Lower IC (A) Header Vent Line Valve	V-10(A)	Yes	Yes	No	Yes	Yes	Closed
Lower IC (A) Header Vent Line Valve	V-11(A)	Yes	Yes	No	Yes	No	
Lower IC (A) Header Vent Line Valve	V-12(A)	Yes	Yes	No	Yes	Yes	Open
Train B Isolation Condenser	–	–	–	–	–	–	–
IC (B) Heat Exchanger	–	Yes	Yes	No	–	–	–
Inline Vessel (B)	–	Yes	Yes	Yes	–	–	–
IC (B) Steam Supply Line	P-1(B)	Yes	Yes	Yes	–	–	–
IC (B) Steam Supply Line Isolation Valve	V-1(B)	Yes	Yes	Yes	Yes	Yes	As-Is
IC (B) Steam Supply Line Isolation Valve	V-2(B)	Yes	Yes	Yes	Yes	Yes	As-Is
IC (B) Condensate Return Line	P-2(B)	Yes	Yes	Yes	No	–	–
IC (B) Condensate Return Line Isolation Valve	V-3(B)	Yes	Yes	Yes	Yes	Yes	As-Is
IC (B) Condensate Return Line Isolation Valve	V-4(B)	Yes	Yes	Yes	Yes	Yes	As-Is
IC (B) Condensate Return Line Valve	V-5(B)	Yes	Yes	Yes	No	Yes	As-Is
IC (B) Condensate Return Line Bypass Valve	V-6(B)	Yes	Yes	Yes	No	Yes	Open
Upper IC (B) Header Vent Line	–	Yes	Yes	No	–	–	–

Table 2.4.1-1

ICS Mechanical Equipment

Equipment Name (Description)	Equipment Identifier See Figure 2.4.1-1	ASME Code Section III	Seismic Cat. I	RCPB Component	Containment Isolation Valve	Remotely Operated	Loss of Motive Power Position
Upper IC (B) Header Vent Line Valve	V-7(B)	Yes	Yes	No	Yes	Yes	Closed
Upper IC (B) Header Vent Line Valve	V-8(B)	Yes	Yes	No	Yes	Yes	Closed
Lower IC (B) Header Vent Line	–	Yes	Yes	No	–	–	–
Lower IC (B) Header Vent Line Valve	V-9(B)	Yes	Yes	No	Yes	Yes	Closed
Lower IC (B) Header Vent Line Valve	V-10(B)	Yes	Yes	No	Yes	Yes	Closed
Lower IC (B) Header Vent Line Valve	V-11(B)	Yes	Yes	No	Yes	No	NA
Lower IC (B) Header Vent Line Valve	V-12(B)	Yes	Yes	No	Yes	Yes	Open
Train C Isolation Condenser	–	–	–	–	–	–	–
IC (C) Heat Exchanger	–	Yes	Yes	No	–	–	–
Inline Vessel (C)	–	Yes	Yes	Yes	–	–	–
IC (C) Steam Supply Line	P-1(C)	Yes	Yes	Yes	–	–	–
IC (C) Steam Supply Line Isolation Valve	V-1(C)	Yes	Yes	Yes	Yes	Yes	As-Is
IC (C) Steam Supply Line Isolation Valve	V-2(C)	Yes	Yes	Yes	Yes	Yes	As-Is
IC (C) Condensate Return Line	P-2(C)	Yes	Yes	Yes	No	–	–
IC (C) Condensate Return Line Isolation Valve	V-3(C)	Yes	Yes	Yes	Yes	Yes	As-Is
IC (C) Condensate Return Line Isolation Valve	V-4(C)	Yes	Yes	Yes	Yes	Yes	As-Is

Table 2.4.1-1

ICS Mechanical Equipment

Equipment Name (Description)	Equipment Identifier See Figure 2.4.1-1	ASME Code Section III	Seismic Cat. I	RCPB Component	Containment Isolation Valve	Remotely Operated	Loss of Motive Power Position
IC (C) Condensate Return Line Valve	V-5(C)	Yes	Yes	Yes	No	Yes	As-Is
IC (C) Condensate Return Line Bypass Valve	V-6(C)	Yes	Yes	Yes	No	Yes	Open
Upper IC (C) Header Vent Line	–	Yes	Yes	No	–	–	–
Upper IC (C) Header Vent Line Valve	V-7(C)	Yes	Yes	No	Yes	Yes	Closed
Upper IC (C) Header Vent Line Valve	V-8(C)	Yes	Yes	No	Yes	Yes	Closed
Lower IC (C) Header Vent Line	–	Yes	Yes	No	–	–	–
Lower IC (C) Header Vent Line Valve	V-9(C)	Yes	Yes	No	Yes	Yes	Closed
Lower IC (C) Header Vent Line Valve	V-10(C)	Yes	Yes	No	Yes	Yes	Closed
Lower IC (C) Header Vent Line Valve	V-11(C)	Yes	Yes	No	Yes	No	–
Lower IC (C) Header Vent Line Valve	V-12(C)	Yes	Yes	No	Yes	Yes	Open
Train D Isolation Condenser	–	–	–	–	–	–	–
IC (D) Heat Exchanger	–	Yes	Yes	No	No	–	
Inline Vessel (D)	–	Yes	Yes	Yes	No		–
IC (D) Steam Supply Line	P-1(D)	Yes	Yes	Yes	No	–	–
IC (D) Steam Supply Line Isolation Valve	V-1(D)	Yes	Yes	Yes	Yes	Yes	As-Is
IC (D) Steam Supply Line Isolation Valve	V-2(D)	Yes	Yes	Yes	Yes	Yes	As-Is

Table 2.4.1-1

ICS Mechanical Equipment

Equipment Name (Description)	Equipment Identifier See Figure 2.4.1-1	ASME Code Section III	Seismic Cat. I	RCPB Component	Containment Isolation Valve	Remotely Operated	Loss of Motive Power Position
IC (D) Condensate Return Line	P-2(D)	Yes	Yes	Yes	No	–	–
IC (D) Condensate Return Line Isolation Valve	V-3(D)	Yes	Yes	Yes	Yes	Yes	As-Is
IC (D) Condensate Return Line Isolation Valve	V-4(D)	Yes	Yes	Yes	Yes	Yes	As-Is
IC (D) Condensate Return Line Valve	V-5(D)	Yes	Yes	Yes	No	Yes	As-Is
IC (D) Condensate Return Line Bypass Valve	V-6(D)	Yes	Yes	Yes	No	Yes	Open
Upper IC (D) Header Vent Line	–	Yes	Yes	No	No	–	–
Upper IC (D) Header Vent Line Valve	V-7(D)	Yes	Yes	No	Yes	Yes	Closed
Upper IC (D) Header Vent Line Valve	V-8(D)	Yes	Yes	No	Yes	Yes	Closed
Lower IC (D) Header Vent Line	–	Yes	Yes	No	No	–	–
Lower IC (D) Header Vent Line Valve	V-9(D)	Yes	Yes	No	Yes	Yes	Closed
Lower IC (D) Header Vent Line Valve	V-10(D)	Yes	Yes	No	Yes	Yes	Closed
Lower IC (D) Header Vent Line Valve	V-11(D)	Yes	Yes	No	Yes	No	–
Lower IC (D) Header Vent Line Valve	V-12(D)	Yes	Yes	No	Yes	Yes	Open
Pool Cross-Connect Valve (Squib)	V-13(A)	Yes	Yes	No	No	Yes	As-is

Table 2.4.1-1

ICS Mechanical Equipment

Equipment Name (Description)	Equipment Identifier See Figure 2.4.1-1	ASME Code Section III	Seismic Cat. I	RCPB Component	Containment Isolation Valve	Remotely Operated	Loss of Motive Power Position
Pool Cross-Connect Valve (Pneumatic)	V-14(A)	Yes	Yes	No	No	Yes	As-is
Pool Cross-Connect Valve (Squib)	V-13(B)	Yes	Yes	No	No	Yes	As-is
Pool Cross-Connect Valve (Pneumatic)	V-14(B)	Yes	Yes	No	No	Yes	As-is

Table 2.4.1-2

ICS Electrical Equipment

Equipment Name (Description)	Equipment Identifier See Figure 2.4.1-1	Control Q-DCIS / DPS	Seismic Category I	Safety-Related	Safety-Related Display	Remotely Operated Valve	Containment Isolation Valve Actuator
IC (A) Steam Supply Line Isolation Valve	V-1(A)	Yes/No	Yes	Yes	Position	Yes	Yes
IC (A) Steam Supply Line Isolation Valve	V-2(A)	Yes/No	Yes	Yes	Position	Yes	Yes
IC (A) Condensate Return Line Isolation Valve	V-3(A)	Yes/No	Yes	Yes	Position	Yes	Yes
IC (A) Condensate Return Line Isolation Valve	V-4(A)	Yes/No	Yes	Yes	Position	Yes	Yes
IC (A) Condensate Return Line Valve	V-5(A)	Note 1	Yes	Yes	Position	Yes	No
IC (A) Condensate Return Line Bypass Valve	V-6(A)	Note 1	Yes	Yes	Position	Yes	No
Upper IC (A) Header Vent Line Valve	V-7(A)	Yes/No	Yes	Yes	Position	Yes	Yes
Upper IC (A) Header Vent Line Valve	V-8(A)	Yes/No	Yes	Yes	Position	Yes	Yes
Lower IC (A) Header Vent Line Valve	V-9(A)	Yes/No	Yes	Yes	Position	Yes	Yes
Lower IC (A) Header Vent Line Valve	V-10(A)	Yes/No	Yes	Yes	Position	Yes	Yes
Lower IC (A) Header Vent Line Valve	V-12(A)	Yes/No	Yes	Yes	Position	Yes	Yes
Pool Cross Connect Valve (Squib)	V-13(A)	Yes/Yes	Yes	Yes	Position	Yes	No
Pool Cross Connect Valve (Pneumatic)	V-14(A)	Yes/Yes	Yes	Yes	Position	Yes	No
IC (B) Steam Supply Line Isolation Valve	V-1(B)	Yes/No	Yes	Yes	Position	Yes	Yes

Table 2.4.1-2

ICS Electrical Equipment

Equipment Name (Description)	Equipment Identifier See Figure 2.4.1-1	Control Q-DCIS / DPS	Seismic Category I	Safety-Related	Safety-Related Display	Remotely Operated Valve	Containment Isolation Valve Actuator
IC (B) Steam Supply Line Isolation Valve	V-2(B)	Yes/No	Yes	Yes	Position	Yes	Yes
IC (B) Condensate Return Line Isolation Valve	V-3(B)	Yes/No	Yes	Yes	Position	Yes	Yes
IC (B) Condensate Return Line Isolation Valve	V-4(B)	Yes/No	Yes	Yes	Position	Yes	Yes
IC (B) Condensate Return Line Valve	V-5(B)	Note 1	Yes	Yes	Position	Yes	No
IC (B) Condensate Return Line Bypass Valve	V-6(B)	Note 1	Yes	Yes	Position	Yes	No
Upper IC (B) Header Vent Line Valve	V-7(B)	Yes/No	Yes	Yes	Position	Yes	Yes
Upper IC (B) Header Vent Line Valve	V-8(B)	Yes/No	Yes	Yes	Position	Yes	Yes
Lower IC (B) Header Vent Line Valve	V-9(B)	Yes/No	Yes	Yes	Position	Yes	Yes
Lower IC (B) Header Vent Line Valve	V-10(B)	Yes/No	Yes	Yes	Position	Yes	Yes
Lower IC (B) Header Vent Line Valve	V-12(B)	Yes/No	Yes	Yes	Position	Yes	Yes
Pool Cross Connect Valve (Squib)	V-13(B)	Yes/Yes	Yes	Yes	Position	Yes	No
Pool Cross Connect Valve (Pneumatic)	V-14(B)	Yes/Yes	Yes	Yes	Position	Yes	No
IC (C) Steam Supply Line Isolation Valve	V-1(C)	Yes/No	Yes	Yes	Position	Yes	Yes
IC (C) Steam Supply Line Isolation Valve	V-2(C)	Yes/No	Yes	Yes	Position	Yes	Yes

Table 2.4.1-2

ICS Electrical Equipment

Equipment Name (Description)	Equipment Identifier See Figure 2.4.1-1	Control Q-DCIS / DPS	Seismic Category I	Safety-Related	Safety-Related Display	Remotely Operated Valve	Containment Isolation Valve Actuator
IC (C) Condensate Return Line Isolation Valve	V-3(C)	Yes/No	Yes	Yes	Position	Yes	Yes
IC (C) Condensate Return Line Isolation Valve	V-4(C)	Yes/No	Yes	Yes	Position	Yes	Yes
IC (C) Condensate Return Line Valve	V-5(C)	Note 1	Yes	Yes	Position	Yes	No
IC (C) Condensate Return Line Bypass Valve	V-6(C)	Note 1	Yes	Yes	Position	Yes	No
Upper IC (C) Header Vent Line Valve	V-7(C)	Yes/No	Yes	Yes	Position	Yes	Yes
Upper IC (C) Header Vent Line Valve	V-8(C)	Yes/No	Yes	Yes	Position	Yes	Yes
Lower IC (C) Header Vent Line Valve	V-9(C)	Yes/No	Yes	Yes	Position	Yes	Yes
Lower IC (C) Header Vent Line Valve	V-10(C)	Yes/No	Yes	Yes	Position	Yes	Yes
Lower IC (C) Header Vent Line Valve	V-12(C)	Yes/No	Yes	Yes	Position	Yes	Yes
IC (D) Steam Supply Line Isolation Valve	V-1(D)	Yes/No	Yes	Yes	Position	Yes	Yes
IC (D) Steam Supply Line Isolation Valve	V-2(D)	Yes/No	Yes	Yes	Position	Yes	Yes
IC (D) Condensate Return Line Isolation Valve	V-3(D)	Yes/No	Yes	Yes	Position	Yes	Yes
IC (D) Condensate Return Line Isolation Valve	V-4(D)	Yes/No	Yes	Yes	Position	Yes	Yes

Table 2.4.1-2

ICS Electrical Equipment

Equipment Name (Description)	Equipment Identifier See Figure 2.4.1-1	Control Q-DCIS / DPS	Seismic Category I	Safety-Related	Safety-Related Display	Remotely Operated Valve	Containment Isolation Valve Actuator
IC (D) Condensate Return Line Valve	V-5(D)	Note 1	Yes	Yes	Position	Yes	No
IC (D) Condensate Return Line Bypass Valve	V-6(D)	Note 1	Yes	Yes	Position	Yes	No
Upper IC (D) Header Vent Line Valve	V-7(D)	Yes/No	Yes	Yes	Position	Yes	Yes
Upper IC (D) Header Vent Line Valve	V-8(D)	Yes/No	Yes	Yes	Position	Yes	Yes
Lower IC (D) Header Vent Line Valve	V-9(D)	Yes/No	Yes	Yes	Position	Yes	Yes
Lower IC (D) Header Vent Line Valve	V-10(D)	Yes/No	Yes	Yes	Position	Yes	Yes
Lower IC (D) Header Vent Line Valve	V-12(D)	Yes/No	Yes	Yes	Position	Yes	Yes

Note 1: Valve pair V-5 and V-6 must have a total of four control inputs to the pair. The minimum control inputs for this pair must include two different Q-DCIS divisions to one of the valves and a third different Q-DCIS division and DPS to the other valve. The design is such that any combination of two of four divisions or DPS can initiate ICS flow in all four ICS trains.

Table 2.4.1-3

ITAAC For The Isolation Condenser System

Design Commitment	Inspections, Tests, Analyses	Acceptance Criteria
1. The functional arrangement of the ICS is as described in the Design Description of this Subsection 2.4.1, Table 2.4.1-1, Table 2.4.1-2, and as shown in Figure 2.4.1-1.	Inspection of the as-built system will be performed.	The as-built ICS conforms with the functional arrangement described in the Design Description of this Subsection 2.4.1, Table 2.4.1-1, Table 2.4.1-2, and as shown in Figure 2.4.1-1.
2a1. The components identified in Table 2.4.1-1 as ASME Code Section III are designed in accordance with ASME Code Section III requirements.	Inspection of ASME Code Design Reports (NCA-3550) and required documents will be conducted.	ASME Code Design Reports (NCA-3550) (certified, when required by ASME Code) exist and conclude that the design of the components identified in Table 2.4.1-1 as ASME Code Section III complies with the requirements of ASME Code Section III including those stresses applicable to loads related to fatigue (including environmental effects), thermal expansion, seismic, hydrogen combustion and combined.
2a2. The components identified in Table 2.4.1-1 as ASME Code Section III shall be reconciled with the design requirements.	A reconciliation analysis of the components identified in Table 2.4.1-1 as ASME Code Section III using as-designed and as-built information and ASME Code Design Reports (NCA-3550) will be performed.	ASME Code Design Report(s) (NCA-3550) (certified, when required by ASME Code) exist and conclude that design reconciliation has been completed, in accordance with ASME Code, for as-built reconciliation of the components identified in Table 2.4.1-1 as ASME Code Section III. The report documents the results of the reconciliation analysis.

Table 2.4.1-3

ITAAC For The Isolation Condenser System

Design Commitment	Inspections, Tests, Analyses	Acceptance Criteria
2a3. The components identified in Table 2.4.1-1 as ASME Code Section III are fabricated, installed, and inspected in accordance with ASME Code Section III requirements.	Inspection of the components identified in Table 2.4.1-1 as ASME Code Section III will be conducted.	ASME Code Data Report(s) (including N-5 Data Reports, where applicable) (certified, when required by ASME Code) and inspection reports exist and conclude that the components identified in Table 2.4.1-1 as ASME Code Section III are fabricated, installed, and inspected in accordance with ASME Code Section III requirements.
2b1. The piping identified in Table 2.4.1-1 as ASME Code Section III is designed in accordance with ASME Code Section III requirements.	Inspection of ASME Code Design Reports (NCA-3550) and required documents will be conducted. {{Design Acceptance Criteria}}	ASME Code Design Report(s) (NCA-3550) (certified, when required by ASME Code) exist and conclude that the design of the piping identified in Table 2.4.1-1 as ASME Code Section III complies with the requirements of the ASME Code, Section III, including those stresses applicable to loads related to fatigue (including environmental effects), thermal expansion, seismic, hydrogen combustion and combined. {{Design Acceptance Criteria}}

Table 2.4.1-3

ITAAC For The Isolation Condenser System

Design Commitment	Inspections, Tests, Analyses	Acceptance Criteria
2b2. The as-built piping identified in Table 2.4.1-1 as ASME Code Section III shall be reconciled with the piping design requirements.	A reconciliation analysis of the piping identified in Table 2.4.1-1 as ASME Code Section III using as-designed and as-built information and ASME Code Design Reports (NCA-3550) will be performed.	ASME Code Design Report(s) (NCA-3550) (certified, when required by ASME Code) exist and conclude that design reconciliation has been completed, in accordance with ASME Code, for as-built reconciliation of the piping identified in Table 2.4.1-1 as ASME Code Section III. The report documents the results of the reconciliation analysis.
2b3. The piping identified in Table 2.4.1-1 as ASME Code Section III is fabricated, installed, and inspected in accordance with ASME Code Section III requirements.	Inspections of the piping identified in Table 2.4.2-1 as ASME Code Section III will be conducted.	ASME Code Data Report(s) (certified, when required by ASME Code) and inspection reports (including N-5 Data Reports where applicable) exist and conclude that the piping identified in Table 2.4.2-1 as ASME Code Section III is fabricated, installed, and inspected in accordance with ASME Code Section III requirements.
3a. Pressure boundary welds in components identified in Table 2.4.1-1 as ASME Code Section III meet ASME Code Section III non-destructive examination requirements.	Inspection of the as-built pressure boundary welds in components identified in Table 2.4.1-1 as ASME Code Section III will be performed in accordance with ASME Code Section III.	ASME Code report(s) exist and conclude that ASME Code Section III requirements are met for non-destructive examination of pressure boundary welds in components identified in Table 2.4.1-1 as ASME Code Section III.

Table 2.4.1-3

ITAAC For The Isolation Condenser System

Design Commitment	Inspections, Tests, Analyses	Acceptance Criteria
3b. Pressure boundary welds in piping identified in Table 2.4.1-1 as ASME Code Section III meet ASME Code Section III non-destructive examination requirements.	Inspection of the as-built pressure boundary welds in piping identified in Table 2.4.1-1 as ASME Code Section III will be performed in accordance with ASME Code Section III.	ASME Code report(s) exist and conclude that ASME Code Section III requirements are met for non-destructive examination of pressure boundary welds in piping identified in Table 2.4.1-1 as ASME Code Section III.
4a. The components identified in Table 2.4.1-1 as ASME Code Section III retain their pressure boundary integrity at their design pressure.	A hydrostatic test will be conducted on those code components identified in Table 2.4.1-1 as ASME Code Section III that are required to be hydrostatically tested by ASME Code Section III.	ASME Code Data Report(s) exist and conclude that the results of the hydrostatic test of components identified in Table 2.4.1-1 as ASME Code Section III comply with the requirements of ASME Code Section III.
4b. The piping identified in Table 2.4.1-1 as ASME Code Section III retains its pressure boundary integrity at its design pressure.	A hydrostatic test will be conducted on the code piping identified in Table 2.4.1-1 as ASME Code Section III that is required to be hydrostatically tested by ASME Code Section III.	ASME Code Data Report(s) exist and conclude that the results of the hydrostatic test of piping identified in Table 2.4.1-1 as ASME Code Section III comply with the requirements in ASME Code Section III.
5. The equipment identified in Table 2.4.1-1 and Table 2.4.1-2 as Seismic Category I can withstand Seismic Category I loads without loss of safety function.	i. Inspection will be performed to verify that the Seismic Category I equipment identified in Table 2.4.1-1 and Table 2.4.1-2 are located in a Seismic Category I structure.	i. The equipment identified as Seismic Category I in Table 2.4.1-1 and Table 2.4.1-2 is located in a Seismic Category I structure.

Table 2.4.1-3

ITAAC For The Isolation Condenser System

Design Commitment	Inspections, Tests, Analyses	Acceptance Criteria
	ii. Type tests, analyses, or a combination of type tests and analyses, of equipment identified in Table 2.4.1-1 and Table 2.4.1-2 as Seismic Category I, will be performed using analytical assumptions, or will be performed under conditions which bound the Seismic Category I equipment design requirements.	ii. The equipment identified in Table 2.4.1-1 and Table 2.4.1-2 as Seismic Category I can withstand Seismic Category I loads without loss of safety function.
	iii. Inspections and analyses will be performed to verify that the as-built equipment identified in Table 2.4.1-1 and Table 2.4.1-2, including anchorage, is bounded by the testing or analyzed conditions, including the hydrodynamic effects of surrounding water for submerged components.	iii. The as-built equipment identified in Table 2.4.1-1 and Table 2.4.1-2 as Seismic Category I, including anchorage, can withstand Seismic Category I loads including the hydrodynamic effects of surrounding water for submerged components without loss of safety function.
6a. Each of the ICS divisions (or safety-related loads/components) identified in Table 2.4.1-2 is powered from its respective safety-related division.	Testing will be performed on the ICS by providing a simulated test signal in only one safety-related division at a time.	A simulated test signal exists in the safety-related division (or at the equipment identified in Table 2.4.1-2 powered from the safety-related division) under test in the ICS.

Table 2.4.1-3

ITAAC For The Isolation Condenser System

Design Commitment	Inspections, Tests, Analyses	Acceptance Criteria
6b. In the ICS, independence is provided between safety-related divisions, and between safety-related divisions and non-safety related equipment.	i. Tests will be performed on the ICS by providing a test signal in only one safety-related division at a time.	i. The test signal exists only in the safety-related Division under test in the ICS.
	ii. Inspection of the as-built safety-related divisions in the ICS will be performed.	ii. The as-built safety-related divisions in the ICS are separated: • Physical separation or electrical isolation exists between these safety-related divisions in accordance with RG 1.75. • Physical separation or electrical isolation exists between safety-related divisions and non-safety related equipment in accordance with RG 1.75.
7a. Each mechanical train of the ICS located outside the containment is physically separated from the other train(s) so as not to preclude accomplishment of the intended safety-related function.	Inspections and analysis will be conducted for each of the ICS mechanical trains located outside the containment.	Each mechanical train of ICS located outside containment is protected against design basis events and their direct consequences by spatial separation, barriers, restraints, or enclosures so as not to preclude accomplishment of the intended safety-related function.

Table 2.4.1-3

ITAAC For The Isolation Condenser System

Design Commitment	Inspections, Tests, Analyses	Acceptance Criteria
7b. Each mechanical train of the ICS located inside the containment is physically separated from the other train(s) so as not to preclude accomplishment of the intended safety-related function.	Inspections or analysis will be conducted for each of the ICS mechanical trains located inside the containment.	Each mechanical train of ICS located inside containment is protected against design basis events and their direct consequences by spatial separation, barriers, restraints, or enclosures so as not to preclude accomplishment of the intended safety-related function.
8. (Deleted)		
9. Re-positionable (NOT squib) valves designated in Table 2.4.1-1 open, close, or both open and close, under differential pressure, fluid flow, and temperature conditions.	Tests of installed valves will be performed for opening, closing, or both opening and also closing under system preoperational differential pressure, fluid flow, and temperature conditions.	Upon receipt of the actuating signal, each valve opens, closes, or both opens and closes, depending upon the valve's safety function.
10. The pneumatically operated valve(s) designated in Table 2.4.1-1 fail in the mode listed if either electric power to the valve actuating solenoid is lost, or pneumatic pressure to the valve(s) is lost.	Tests will be conducted on the as-built valve(s).	The pneumatically operated valve(s) identified in Table 2.4.1-1 fail in the listed mode when either electric power to the valve actuating solenoid is lost, or pneumatic pressure to the valve(s) is lost.
11. (Deleted)		
12. (Deleted)		
13. Each condensate return valve, listed in Table 2.4.1-1, opens to initiate the ICS.	Opening test of valves will be conducted under pre-operational differential pressure, fluid flow and temperature conditions.	Each condensate return valve opening time is no less than 7.5 seconds and no greater than 31 seconds under pre-operational differential pressure, fluid flow, and temperature conditions.

Table 2.4.1-3

ITAAC For The Isolation Condenser System

Design Commitment	Inspections, Tests, Analyses	Acceptance Criteria
14. The normally open ICS isolation valves in the steam supply and condensate return lines, listed in Table 2.4.1-1, close automatically on receipt of high vent line radiation from the Process Radiation Monitoring System (PRMS).	An isolation valve closure test will be performed using simulated signals.	The ICS isolation valves close upon receipt of signals from the PRMS.
15. The normally open ICS isolation valves in the steam supply and condensate return lines, listed in Table 2.4.1-1, close automatically on receipt of signals from the LD&IS.	An isolation valve closure test will be performed using simulated signals.	The ICS isolation valves close upon receipt of signals from the LD&IS.
16. Each ICS train normally closed condensate return valve, listed in Table 2.4.1-1, opens upon receipt of the following automatic actuation signals: • RPV high pressure following a time delay • RPV water level below level 2 following a time delay • RPV water level below level 1 • Loss of power to 2 of 4 reactor feed pumps with the reactor mode switch in RUN • MSIVs in 2 of 4 steam lines less than fully open with the reactor mode switch in RUN	Valve opening tests will be performed using simulated automatic actuation signals.	The condensate return valves open upon receipt of automatic actuation signals.

Table 2.4.1-3

ITAAC For The Isolation Condenser System

Design Commitment	Inspections, Tests, Analyses	Acceptance Criteria
17. Each ICS train normally closed condensate return bypass valve, listed in Table 2.4.1-1, opens upon receipt of the following automatic actuation signals: • RPV high pressure following a time delay • RPV water level below level 2 following a time delay • RPV water level below level 1 • Loss of power to 2 of 4 reactor feed pumps with the reactor mode switch in RUN • MSIVs in 2 of 4 steamlines less than fully open with the reactor mode switch in RUN.	Valve opening tests will be performed using simulated automatic actuation signals.	The condensate return valves open upon receipt of automatic actuation signals.
18. The two-series, solenoid-operated lower vent line valves, listed in Table 2.4.1-1, open on high RPV pressure after time delay following condensate return or condensate bypass valve opening signals.	A valve-opening test will be performed using simulated high reactor pressure after a time delay following condensate return or condensate bypass valve opening signals.	The two-series, solenoid-operated vent line valves open on a simulated high RPV pressure signal after a time delay following condensate return or condensate bypass valve opening signals.
19. The three vent lines with two-series, solenoid-operated upper and lower vent line valves, listed in Table 2.4.1-1, open on manual actuation only if condensate return or condensate bypass valve is not closed.	A test(s) will be performed that manually opens the vent valves during pre-operational testing following condensate return or condensate bypass valve opening signals.	The three vent lines with two-series, solenoid-operated vent line valves each, opens on a manual initiation following condensate return or condensate bypass valve opening signals only if the condensate return or condensate bypass valve is not closed.

Table 2.4.1-3

ITAAC For The Isolation Condenser System

Design Commitment	Inspections, Tests, Analyses	Acceptance Criteria
20. The accumulators for the pneumatic isolation valves, listed in Table 2.4.1-1, in the ICS steam supply and condensate return valves have the capacity to close the valves three times with the DW at the DW design pressure.	A test and analysis or test will be performed to demonstrate the capacity of the isolation valve accumulators.	Isolation valve accumulators have the capacity to close the valves three times with the DW pressure at the design pressure.
21. Upon loss of pneumatic pressure to the condensate bypass valve (V-6), the valve strokes to the fully open position.	Tests will be performed to demonstrate that the condensate bypass valve will stroke to the full open position upon the loss of pneumatic pressure to the condensate bypass valve accumulator.	The condensate bypass valve fully opens when pneumatic pressure is removed from the condensate bypass valve.
22. Each ICS train has at least the minimum heat removal capacity assumed in analysis of Abnormal Events with reactor at or above normal operating pressure.	Using prototype test data and as-built IC unit information, an analysis will be performed to establish the heat removal capacity of the IC unit with IC pool at atmospheric saturated conditions.	The ICS train unit heat removal capacity is greater than or equal to 33.75 MWt (assumed in the analysis of Abnormal Events) with the reactor at or above normal operating pressure.
23. Each ICS train provides at least the minimum drainable liquid volume available for return to the RPV assumed in analysis of Abnormal Events.	An analysis will be performed for the as-built isolation condenser system.	The as-built ICS train provides at least 13.88m^3 (490.1 ft^3) (assumed in the analysis of Abnormal Events) of the liquid volume available for return to the RPV.
24. The Equipment Pool and Reactor Well provide sufficient makeup water volume to the IC/PCCS expansion pool to support operation of the ICS and PCCS for the first 72 hours.	i. A valve-opening test will be performed using simulated low-level water signal from the IC/PCCS expansion pool.	i. The valves open on a simulated low-level water signal from the IC/PCCS expansion pool.

Table 2.4.1-3

ITAAC For The Isolation Condenser System

Design Commitment	Inspections, Tests, Analyses	Acceptance Criteria
	ii. A physical measurement will be performed on the dimensions and water level in the IC/PCCS pools, Equipment Pool, and Reactor Well to demonstrate that the required water volume is achieved.	ii. Measurements show that the combined water volume of the IC/PCCS pools, Equipment Pool, and Reactor Well is no less than 6,290 m^3 (222,000 ft^3).
25. The IC/PCCS pools are safety-related and Seismic Category I.	Inspections, tests, type tests, and analyses for the IC/PCCS pools confirm that they are safety-related and Seismic Category I.	The IC/PCCS pools are safety-related and Seismic Category I.
26. Each ICS flow path is constrained to a maximum flow area at transitions between Class 1 piping from containment to Class 2 piping outside containment in order to limit flow in the event of a break.	Inspection will be performed to confirm that the flow area at these transition locations is limited.	Each steam supply branch line contains a flow limiter which is no greater than 76.2 mm (3 in) in diameter, and that the condensate branch lines are no greater than 101.6 mm (4 in) in diameter.
27. (Deleted)		
28. (Deleted)		
29a. Valves on lines attached to the RPV that require maintenance have maintenance valves such that freeze seals will not be required.	Inspections of piping design isometric drawings will be conducted. {{Design Acceptance Criteria}}	A review of piping design isometric drawings confirms that maintenance valves are included such that freeze seals will not be required. {{Design Acceptance Criteria}}

Table 2.4.1-3

ITAAC For The Isolation Condenser System

Design Commitment	Inspections, Tests, Analyses	Acceptance Criteria
29b. The as-built location of valves on lines attached to the RPV that require maintenance shall be reconciled to design requirements.	A reconciliation evaluation of valves on lines attached to the RPV using as-designed and as-built information will be performed.	A design reconciliation has been completed for the as-built location of valves relative to the design requirements.

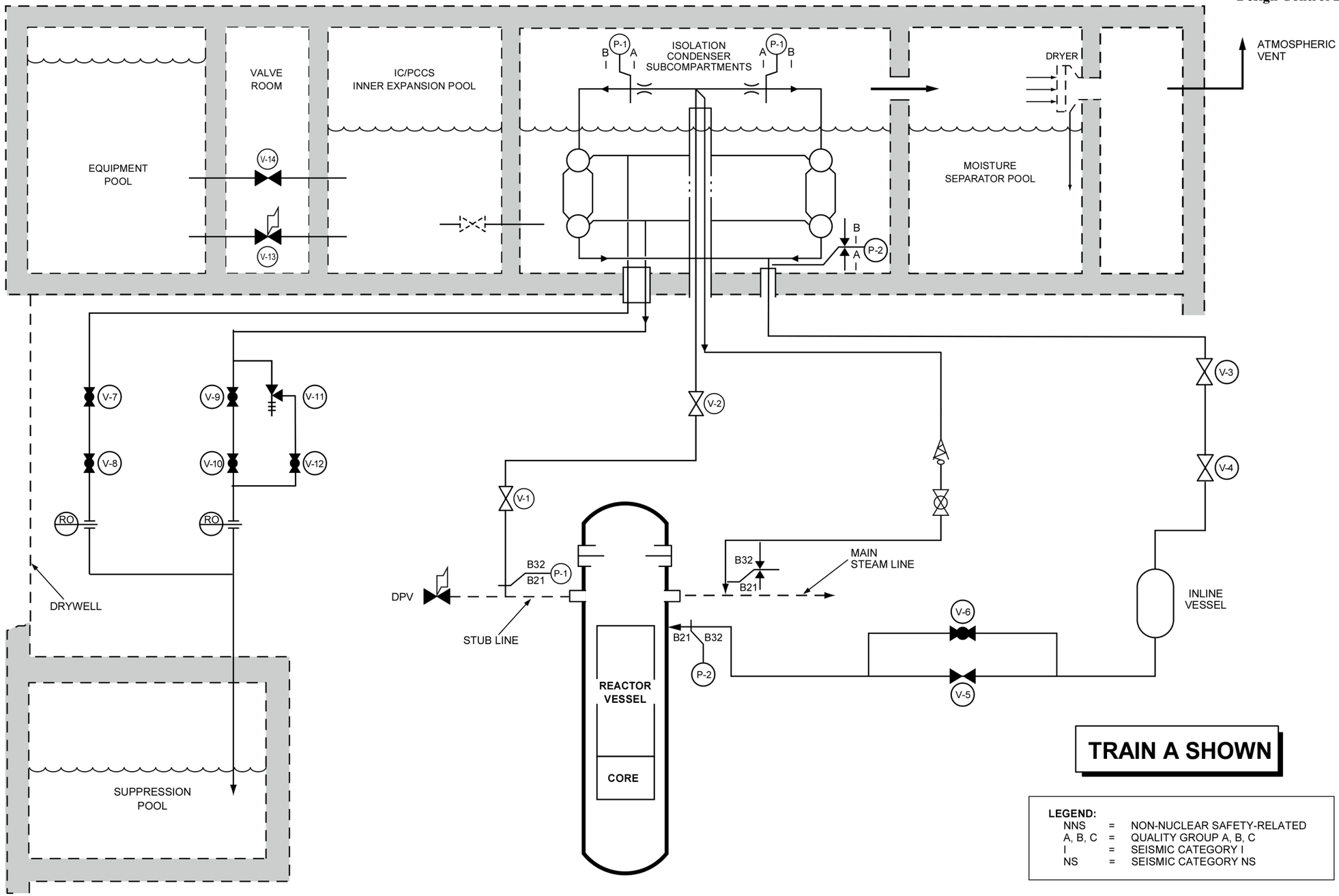

Figure 2.4.1-1. Isolation Condenser System Schematic

2.4.2 Emergency Core Cooling System - Gravity-Driven Cooling System

Design Description

Emergency core cooling is provided by the Gravity-Driven Cooling System (GDCS) located within containment in conjunction with the ADS in case of a LOCA.

The GDCS alarms, displays, controls, and status indications in the main control room are addressed by Section 3.3.

The environmental qualification of GDCS components is addressed in Section 3.8; and the environmental and seismic qualification of digital instrumentation and controls equipment is addressed in Section 3.8.

The GDCS software is developed in accordance with the software development program described in Section 3.2.

Refer to Subsection 2.2.15 for "Instrumentation and Control Compliance with IEEE Standard 603."

(1) The functional arrangement of the GDCS is as described in Subsection 2.4.2 and as listed in Table 2.4.2-1 and as shown on Figure 2.4.2-1.

(2) a1. The components identified in Table 2.4.2-1 as ASME Code Section III are designed in accordance with ASME Code Section III requirements.

a2. The components identified in Table 2.4.2-1 as ASME Code Section III shall be reconciled with the design requirements.

a3. The components identified in Table 2.4.2-1 as ASME Code Section III are fabricated, installed, and inspected in accordance with ASME Code Section III requirements.

b1. The piping identified in Table 2.4.2-1 as ASME Code Section III is designed in accordance with ASME Code Section III requirements.

b2. The as-built piping identified in Table 2.4.2-1 as ASME Code Section III shall be reconciled with the piping design requirements.

b3. The piping identified in Table 2.4.2-1 as ASME Code Section III is fabricated, installed, and inspected in accordance with ASME Code Section III requirements.

(3) a. Pressure boundary welds in components identified in Table 2.4.2-1 as ASME Code Section III meet ASME Code Section III non-destructive examination requirements.

b. Pressure boundary welds in piping identified in Table 2.4.2-1 as ASME Code Section III meet ASME Code Section III non-destructive examination requirements.

(4) a. The components identified in Table 2.4.2-1 as ASME Code Section III retain their pressure boundary integrity at their design pressure.

b. The piping identified in Table 2.4.2-1 as ASME Code Section III retains its pressure boundary integrity at its design pressure.

(5) The equipment identified in Table 2.4.2-1 and Table 2.4.2-2 as Seismic Category I can withstand Seismic Category I loads without loss of safety function.

(6) (Deleted)

(7) (Deleted)

(8) a. The GDCS injection lines provide sufficient flow to maintain water coverage above (Top of Active Fuel) TAF for 72 hours following a design basis LOCA.

b. The GDCS equalizing lines provide sufficient flow to maintain water coverage above TAF for 72 hours following a design basis LOCA.

(9) The GDCS squib valves used in the injection and equalization lines open as designed.

(10) a. Check valves shown on Figure 2.4.2-1 open and close under system pressure, fluid flow, and temperature conditions.

b. The GDCS injection line check valves meet the criterion for maximum fully open flow coefficient in the reverse flow direction.

(11) (Deleted)

(12) GDCS squib valves maintain RPV backflow leak tightness and maintain reactor coolant pressure boundary integrity during normal plant operation.

(13) Each GDCS injection line includes a nozzle flow limiter to limit break size.

(14) Each GDCS equalizing line includes a nozzle flow limiter to limit break size.

(15) Each of the GDCS divisions is powered from its respective safety-related power division.

(16) Each GDCS mechanical train located inside the containment is physically separated from the other train(s) so as not to preclude accomplishment of the intended safety-related function.

(17) The GDCS pools A, B/C, and D are sized to hold a minimum drainable water volume.

(18) The GDCS pools A, B/C, and D are sized to hold a specified minimum water level.

(19) The elevation change between low water level of GDCS pools and the centerline of GDCS injection line nozzles is sufficient to provide gravity-driven flow.

(20) The minimum drainable volume from the suppression pool to the RPV is sufficient to meet long-term post-LOCA core cooling requirements.

(21) The long-term GDCS minimum equalizing driving head is based on RPV Level 0.5.

(22) The GDCS Deluge squib valves open as designed.

(23) (Deleted)

(24) The GDCS injection piping is installed to allow venting of non-condensable gases to GDCS pools and to RPV, to prevent collection in the GDCS injection pipes.

(25) Deluge system has redundant nonsafety-related Programmable Logic Controllers (PLCs) that are connected to thermocouples in each cell of the lower drywell Basemat-Internal Melt Arrest Coolability (BiMAC) system.

(26) When temperatures exceed the setpoint at one set of thermocouples coincident with setpoints being exceeded at a second set of thermocouples in adjacent cells, each PLC starts a deluge squib valve timer.

(27) The GDCS deluge valve squib initiation signals are inhibited when either of the safety-related deluge system lower drywell temperature switches sense temperatures lower than a preset value coincident with the presence of both deluge squib valve timer signals.

(28) a. Valves on lines attached to the RPV that require maintenance have maintenance valves such that freeze seals will not be required.

b. The as-built location of valves on lines attached to the RPV in the GDCS that require maintenance shall be reconciled to design requirements.

(29) a. (Deleted)

b. The BiMAC has a material located on top of the BiMAC pipes to protect against melt impingement during the initial corium relocation event.

c. The BiMAC is designed with a cover so that debris will penetrate it in a short period of time while providing protection for the BiMAC from CRD housings falling from the vessel.

d. The BiMAC piping is inclined from horizontal to permit natural circulation flow.

e. The material located on top of the BiMAC pipes does not generate non-condensable gases in quantities that would result in exceeding the containment ultimate pressure.

Inspections, Tests, Analyses, and Acceptance Criteria

Table 2.4.2-3 provides a definition of the inspections, test and analyses, together with associated acceptance criteria for the Gravity-Driven Cooling System.

Table 2.4.2-1

GDCS Mechanical Equipment

Equipment Name (Description)	Equipment Identifier See Figure 2.4.2-1	ASME Code Section III	Seismic Cat. I	RCPB Component	Containment Isolation Valve	Remotely Operated	Loss of Motive Power Position	MCR Alarms
GDCS Pool Supply Line to V-2	P-1(A)	Yes	Yes	No	–	–	–	–
GDCS Pool Injection Line Check Valve	V-1(A)	Yes	Yes	Yes	No	No	–	–
GDCS Pool Injection Line Squib Valve	V-2(A)	Yes	Yes	Yes	No	Yes	As-Is	Yes
GDCS Pool Injection Line Squib Valve	V-3(A)	Yes	Yes	Yes	No	Yes	As-Is	Yes
GDCS Pool Injection Line Check Valve	V-4(A)	Yes	Yes	Yes	No	No	–	–
GDCS Injection Line from V-2 (V-3) to RPV inlet nozzle	P-2(A)	Yes	Yes	Yes	–	–	–	–
GDCS Suppression Pool Supply line to V-5	P-5(A)	Yes	Yes	No	–	–	–	–
GDCS Equalizing Line Check Valve	V-6(A)	Yes	Yes	Yes	No	No	–	–

Table 2.4.2-1

GDCS Mechanical Equipment

Equipment Name (Description)	Equipment Identifier See Figure 2.4.2-1	ASME Code Section III	Seismic Cat. I	RCPB Component	Containment Isolation Valve	Remotely Operated	Loss of Motive Power Position	MCR Alarms
GDCS Equalizing Line Squib Valve	V-5(A)	Yes	Yes	Yes	No	Yes	As-Is	Yes
GDCS Suppression Pool Equalizing Line from V-5 to RPV inlet nozzle	P-3(A)	Yes	Yes	Yes	–	–	–	–
GDCS Deluge Line	P-4(A)	Yes	Yes	No	–	–	–	–
GDCS Deluge Line Squib Valve	V-7(A)	Yes	Yes	No	No	Yes	As-Is	Yes
GDCS Deluge Line Squib Valve	V-8(A)	Yes	Yes	No	No	Yes	As-Is	Yes
GDCS Deluge Line Squib Valve	V-9(A)	Yes	Yes	No	No	Yes	As-Is	Yes
GDCS Pool Supply Line to V-2	P-1(B)	Yes	Yes	No	–	–	–	–
GDCS Pool Injection Line Check Valve	V-1(B)	Yes	Yes	Yes	No	No	–	–
GDCS Pool Injection Line Squib Valve	V-2(B)	Yes	Yes	Yes	No	Yes	As-Is	Yes

Table 2.4.2-1

GDCS Mechanical Equipment

Equipment Name (Description)	Equipment Identifier See Figure 2.4.2-1	ASME Code Section III	Seismic Cat. I	RCPB Component	Containment Isolation Valve	Remotely Operated	Loss of Motive Power Position	MCR Alarms
GDCS Pool Injection Line Squib Valve	V-3(B)	Yes	Yes	Yes	No	Yes	As-Is	Yes
GDCS Pool Injection Line Check Valve	V-4(B)	Yes	Yes	Yes	No	No	–	–
GDCS Injection Line from V-2 (V-3) to RPV inlet nozzle	P-2(B)	Yes	Yes	Yes	–	–	–	–
GDCS Suppression Pool Supply line to V-5	P-5(B)	Yes	Yes	No	–	–	–	–
GDCS Equalizing Line Check Valve	V-6(B)	Yes	Yes	Yes	No	No	–	–
GDCS Equalizing Line Squib Valve	V-5(B)	Yes	Yes	Yes	No	Yes	As-Is	Yes
GDCS Suppression Pool Equalizing Line from V-5 to RPV inlet nozzle	P-3(B)	Yes	Yes	Yes	–	–	–	–
GDCS Deluge Line	P-4(B)	Yes	Yes	No	–	–	–	–

Table 2.4.2-1

GDCS Mechanical Equipment

Equipment Name (Description)	Equipment Identifier See Figure 2.4.2-1	ASME Code Section III	Seismic Cat. I	RCPB Component	Containment Isolation Valve	Remotely Operated	Loss of Motive Power Position	MCR Alarms
GDCS Deluge Line Squib Valve	V-7(B)	Yes	Yes	No	No	Yes	As-Is	Yes
GDCS Deluge Line Squib Valve	V-8(B)	Yes	Yes	No	No	Yes	As-Is	Yes
GDCS Deluge Line Squib Valve	V-9(B)	Yes	Yes	No	No	Yes	As-Is	Yes
GDCS Pool Supply Line to V-2	P-1(C)	Yes	Yes	No	–	–	–	–
GDCS Pool Injection Line Check Valve	V-1(C)	Yes	Yes	Yes	No	No	–	–
GDCS Pool Injection Line Squib Valve	V-2(C)	Yes	Yes	Yes	No	Yes	As-Is	Yes
GDCS Pool Injection Line Squib Valve	V-3(C)	Yes	Yes	Yes	No	Yes	As-Is	Yes
GDCS Pool Injection Line Check Valve	V-4(C)	Yes	Yes	Yes	No	No	–	–

Table 2.4.2-1

GDCS Mechanical Equipment

Equipment Name (Description)	Equipment Identifier See Figure 2.4.2-1	ASME Code Section III	Seismic Cat. I	RCPB Component	Containment Isolation Valve	Remotely Operated	Loss of Motive Power Position	MCR Alarms
GDCS Injection Line from V-2 (V-3) to RPV inlet nozzle	P-2(C)	Yes	Yes	Yes	–	–	–	–
GDCS Suppression Pool Supply line to V-5	P-5(C)	Yes	Yes	No	–	–	–	–
GDCS Equalizing Line Check Valve	V-6(C)	Yes	Yes	Yes	No	No	–	–
GDCS Equalizing Line Squib Valve	V-5(C)	Yes	Yes	Yes	No	Yes	As-Is	Yes
GDCS Suppression Pool Equalizing Line from V-5 to RPV inlet nozzle	P-3(C)	Yes	Yes	Yes	–	–	–	–
GDCS Deluge Line	P-4(C)	Yes	Yes	No	–	–	–	–
GDCS Deluge Line Squib Valve	V-7(C)	Yes	Yes	No	No	Yes	As-Is	Yes
GDCS Deluge Line Squib Valve	V-8(C)	Yes	Yes	No	No	Yes	As-Is	Yes
GDCS Deluge Line Squib Valve	V-9(C)	Yes	Yes	No	No	Yes	As-Is	Yes

Table 2.4.2-1

GDCS Mechanical Equipment

Equipment Name (Description)	Equipment Identifier See Figure 2.4.2-1	ASME Code Section III	Seismic Cat. I	RCPB Component	Containment Isolation Valve	Remotely Operated	Loss of Motive Power Position	MCR Alarms
GDCS Pool Supply Line to V-2	P-1(D)	Yes	Yes	No	–	–	–	–
GDCS Pool Injection Line Check Valve	V-1(D)	Yes	Yes	Yes	No	No	–	–
GDCS Pool Injection Line Squib Valve	V-2(D)	Yes	Yes	Yes	No	Yes	As-Is	Yes
GDCS Pool Injection Line Squib Valve	V-3(D)	Yes	Yes	Yes	No	Yes	As-Is	Yes
GDCS Pool Injection Line Check Valve	V-4(D)	Yes	Yes	Yes	No	No	–	–
GDCS Injection Line from V-2 (V-3) to RPV inlet nozzle	P-2(D)	Yes	Yes	Yes	–	–	–	–
Suppression Pool Equalization Line Intake Screen in each train	N/A	Yes	Yes	No	No	No	–	–

Table 2.4.2-1

GDCS Mechanical Equipment

Equipment Name (Description)	Equipment Identifier See Figure 2.4.2-1	ASME Code Section III	Seismic Cat. I	RCPB Component	Containment Isolation Valve	Remotely Operated	Loss of Motive Power Position	MCR Alarms
GDCS Suppression Pool Supply line to V-5	P-5(D)	Yes	Yes	No	–	–	–	–
GDCS Suppression Pool Injection Line Check Valve	V-6(D)	Yes	Yes	No	No	No	–	–
GDCS Suppression Pool Injection Line Squib Valve	V-5(D)	Yes	Yes	Yes	No	Yes	As-Is	Yes
GDCS Suppression Pool Equalizing Line from V-5 to RPV inlet nozzle	P-3(D)	Yes	Yes	No	–	–	–	–
GDCS Deluge Line	P-4(D)	Yes	Yes	No	–	–	–	–
GDCS Deluge Line Squib Valve	V-7(D)	Yes	Yes	No	No	Yes	As-Is	Yes
GDCS Deluge Line Squib Valve	V-8(D)	Yes	Yes	No	No	Yes	As-Is	Yes
GDCS Deluge Line Squib Valve	V-9(D)	Yes	Yes	No	No	Yes	As-Is	Yes
GDCS Pool Perforated Plate	–	Yes	Yes	No	–	–	–	–

Table 2.4.2-1

GDCS Mechanical Equipment

Equipment Name (Description)	Equipment Identifier See Figure 2.4.2-1	ASME Code Section III	Seismic Cat. I	RCPB Component	Containment Isolation Valve	Remotely Operated	Loss of Motive Power Position	MCR Alarms
GDCS Pool Stainless Steel Liner	–	Yes	Yes	No	–	–	–	–

Table 2.4.2-2

GDCS Electrical Equipment

Equipment Name (Description)	Equipment Identifier See Figure 2.4.2-1	Control Q-DCIS/ DPS	Seismic Category I	Safety-Related	Safety-Related Display	Remotely Operated	Containment Isolation Valve Actuator
GDCS Injection Line Check Valve	V-1(A)	–	Yes	Yes	Yes	No	No
GDCS Injection Line Squib Valve	V-2(A)	Yes / Yes	Yes	Yes	Yes	Yes	No
GDCS Injection Line Squib Valve	V-3(A)	Yes / Yes	Yes	Yes	Yes	Yes	No
GDCS Injection Line Check Valve	V-4(A)	–	Yes	Yes	Yes	No	No
GDCS Suppression Pool Injection Line Squib Valve	V-5(A)	Yes / Yes	Yes	Yes	Yes	Yes	No
GDCS Suppression Pool Injection Line Check Valve	V-6(A)	–	Yes	Yes	Yes	No	No
GDCS Deluge Line Squib Valve	V-7(A)	–	Yes	No	Yes	Yes	No
GDCS Deluge Line Squib Valve	V-8(A)	–	Yes	No	Yes	Yes	No
GDCS Deluge Line Squib Valve	V-9(A)	–	Yes	No	Yes	Yes	No
GDCS Injection Line Check Valve	V-1(B)	–	Yes	Yes	Yes	No	No

Table 2.4.2-2

GDCS Electrical Equipment

Equipment Name (Description)	Equipment Identifier See Figure 2.4.2-1	Control Q-DCIS/ DPS	Seismic Category I	Safety-Related	Safety-Related Display	Remotely Operated	Containment Isolation Valve Actuator
GDCS Injection Line Squib Valve	V-2(B)	Yes / Yes	Yes	Yes	Yes	Yes	No
GDCS Injection Line Squib Valve	V-3(B)	Yes / Yes	Yes	Yes	Yes	Yes	No
GDCS Injection Line Check Valve	V-4(B)	–	Yes	Yes	Yes	No	No
GDCS Suppression Pool Injection Line Squib Valve	V-5(B)	Yes / Yes	Yes	Yes	Yes	Yes	No
GDCS Suppression Pool Injection Line Check Valve	V-6(B)	–	Yes	Yes	Yes	No	No
GDCS Deluge Line Squib Valve	V-7(B)	–	Yes	No	Yes	Yes	No
GDCS Deluge Line Squib Valve	V-8(B)	–	Yes	No	Yes	Yes	No
GDCS Deluge Line Squib Valve	V-9(B)	–	Yes	No	Yes	Yes	No
GDCS Injection Line Check Valve	V-1(C)	–	Yes	Yes	Yes	No	No
GDCS Injection Line Squib Valve	V-2(C)	Yes / Yes	Yes	Yes	Yes	Yes	No
GDCS Injection Line Squib Valve	V-3(C)	Yes / Yes	Yes	Yes	Yes	Yes	No

Table 2.4.2-2

GDCS Electrical Equipment

Equipment Name (Description)	Equipment Identifier See Figure 2.4.2-1	Control Q-DCIS/ DPS	Seismic Category I	Safety-Related	Safety-Related Display	Remotely Operated	Containment Isolation Valve Actuator
GDCS Injection Line Check Valve	V-4(C)	-	Yes	Yes	Yes	No	No
GDCS Suppression Pool Injection Line Squib Valve	V-5(C)	Yes / Yes	Yes	Yes	Yes	Yes	No
GDCS Suppression Pool Injection Line Check Valve	V-6(C)	–	Yes	Yes	Yes	No	No
GDCS Deluge Line Squib Valve	V-7(C)	–	Yes	No	Yes	Yes	No
GDCS Deluge Line Squib Valve	V-8(C)	–	Yes	No	Yes	Yes	No
GDCS Deluge Line Squib Valve	V-9(C)	–	Yes	No	Yes	Yes	No
GDCS Injection Line Check Valve	V-1(D)	–	Yes	Yes	Yes	No	No
GDCS Injection Line Squib Valve	V-2(D)	Yes / Yes	Yes	Yes	Yes	Yes	No
GDCS Injection Line Squib Valve	V-3(D)	Yes / Yes	Yes	Yes	Yes	Yes	No
GDCS Injection Line Check Valve	V-4(D)	–	Yes	Yes	Yes	No	No
GDCS Suppression Pool Injection Line Squib Valve	V-5(D)	Yes / Yes	Yes	Yes	Yes	Yes	No

Table 2.4.2-2

GDCS Electrical Equipment

Equipment Name (Description)	Equipment Identifier See Figure 2.4.2-1	Control Q-DCIS/ DPS	Seismic Category I	Safety-Related	Safety-Related Display	Remotely Operated	Containment Isolation Valve Actuator
GDCS Suppression Pool Injection Line Check Valve	V-6(D)	–	Yes	Yes	Yes	No	No
GDCS Deluge Line Squib Valve	V-7(D)	–	Yes	No	Yes	Yes	No
GDCS Deluge Line Squib Valve	V-8(D)	–	Yes	No	Yes	Yes	No
GDCS Deluge Line Squib Valve	V-9(D)	–	Yes	No	Yes	Yes	No
Programmable Logic Controller Channel A Train 1	–	–	No	No	No	–	–
Programmable Logic Controller Channel B Train 1	–	–	No	No	No	–	–
Programmable Logic Controller Channel A Train 2	–	–	No	No	No	–	–
Programmable Logic Controller Channel B Train 2	–	–	No	No	No	–	–
Deluge System PLC DC power supply battery and charger Channel A Train1	–	–	No	No	No	–	–
Deluge System PLC DC power supply battery and charger Channel B Train 1	–	–	No	No	No	–	–

Table 2.4.2-2

GDCS Electrical Equipment

Equipment Name (Description)	Equipment Identifier See Figure 2.4.2-1	Control Q-DCIS/ DPS	Seismic Category I	Safety-Related	Safety-Related Display	Remotely Operated	Containment Isolation Valve Actuator
Deluge System squib valve initiator DC power supply battery and charger Train 1	–	–	No	No	No	–	–
Deluge System PLC DC power supply battery and charger Channel A Train 2	–	–	No	No	No	–	–
Deluge System PLC DC power supply battery and charger Channel B Train 2	–	–	No	No	No	–	–
Deluge System squib valve initiator DC power supply battery and charger Train 2	–	–	No	No	No	–	–
GDCS lower drywell temperature switch high Switch A Train 1	–	–	Yes	Yes	Yes	–	–
GDCS lower drywell temperature switch high Switch B Train 1	–	–	Yes	Yes	Yes	–	–
GDCS BiMAC thermocouples Channel A Train 1	–	–	No	No	No	–	–
GDCS BiMAC thermocouples Channel B Train 1	–	–	No	No	No	–	–

Table 2.4.2-2

GDCS Electrical Equipment

Equipment Name (Description)	Equipment Identifier See Figure 2.4.2-1	Control Q-DCIS/ DPS	Seismic Category I	Safety-Related	Safety-Related Display	Remotely Operated	Containment Isolation Valve Actuator
GDCS lower drywell temperature switch high Switch A Train 2	–	–	Yes	Yes	Yes	–	–
GDCS lower drywell temperature switch high Switch B Train 2	–	–	Yes	Yes	Yes	–	–
GDCS BiMAC thermocouples Channel A Train 2	–	–	No	No	No	–	–
GDCS BiMAC thermocouples Channel B Train 2	–	–	No	No	No	–	–

Table 2.4.2-3

ITAAC For The Emergency Core Cooling System – Gravity-Driven Cooling System

Design Commitment	Inspections, Tests, Analyses	Acceptance Criteria
1. The functional arrangement of the GDCS is as described in Subsection 2.4.2 and as listed in Table 2.4.2-1 and as shown on Figure 2.4.2-1.	Inspections of the as-built system will be conducted.	The as-built GDCS conforms to the functional arrangement as described in Subsection 2.4.2 and as listed in Table 2.4.2-1 and as shown in Figure 2.4.2-1
2a1. The components identified in Table 2.4.2-1 as ASME Code Section III are designed in accordance with ASME Code Section III requirements.	Inspection of ASME Code Design Reports (NCA-3550) and required documents will be conducted.	ASME Code Design Reports (NCA-3550) (certified, when required by ASME Code) exist and conclude that the design of the components identified in Table 2.4.2-1 as ASME Code Section III complies with the requirements of ASME Code Section III including those stresses applicable to loads related to fatigue (including environmental effects), thermal expansion, seismic, and combined.
2a2. The components identified in Table 2.4.2-1 as ASME Code Section III shall be reconciled with the design requirements.	A reconciliation analysis of the components identified in Table 2.4.2-1 as ASME Code Section III using as-designed and as-built information and ASME Code Design Reports (NCA-3550) will be performed.	ASME Code Design Report(s) (NCA-3550) (certified, when required by ASME Code) exist and conclude that design reconciliation has been completed, in accordance with ASME Code, for as-built reconciliation of the components identified in Table 2.4.2-1 as ASME Code Section III. The report documents the results of the reconciliation analysis.

Table 2.4.2-3

ITAAC For The Emergency Core Cooling System – Gravity-Driven Cooling System

Design Commitment	Inspections, Tests, Analyses	Acceptance Criteria
2a3. The components identified in Table 2.4.2-1 as ASME Code Section III are fabricated, installed, and inspected in accordance with ASME Code Section III requirements.	Inspection of the components identified in Table 2.4.2-1 as ASME Code Section III will be conducted.	ASME Code Data Report(s) (including N-5 Data Reports, where applicable) (certified, when required by ASME Code) and inspection reports exist and conclude that the components identified in Table 2.4.2-1 as ASME Code Section III are fabricated, installed, and inspected in accordance with ASME Code Section III requirements.
2b1. The piping identified in Table 2.4.2-1 as ASME Code Section III is designed in accordance with ASME Code Section III requirements.	Inspection of ASME Code Design Reports (NCA-3550) and required documents will be conducted. {{Design Acceptance Criteria}}	ASME Code Design Report(s) (NCA-3550) (certified, when required by ASME Code) exist and conclude that the design of the piping identified in Table 2.4.2-1 as ASME Code Section III complies with the requirements of the ASME Code, Section III, including those stresses applicable to loads related to fatigue (including environmental effects), thermal expansion, seismic, and combined. {{Design Acceptance Criteria}}

Table 2.4.2-3

ITAAC For The Emergency Core Cooling System – Gravity-Driven Cooling System

Design Commitment	Inspections, Tests, Analyses	Acceptance Criteria
2b2. The as-built piping identified in Table 2.4.2-1 as ASME Code Section III shall be reconciled with the piping design requirements.	A reconciliation analysis of the piping identified in Table 2.4.2-1 as ASME Code Section III using as-designed and as-built information and ASME Code Design Reports (NCA-3550) will be performed.	ASME Code Design Report(s) (NCA-3550) (certified, when required by ASME Code) exist and conclude that design reconciliation has been completed, in accordance with ASME Code, for as-built reconciliation of the piping identified in Table 2.4.2-1 as ASME Code Section III. The report documents the results of the reconciliation analysis.
2b3. The piping identified in Table 2.4.2-1 as ASME Code Section III is fabricated, installed, and inspected in accordance with ASME Code Section III requirements.	Inspections of the piping identified in Table 2.4.2-1 as ASME Code Section III will be conducted.	ASME Code Data Report(s) (certified, when required by ASME Code) and inspection reports (including N-5 Data Reports where applicable) exist and conclude that the piping identified in Table 2.4.2-1 as ASME Code Section III is fabricated, installed, and inspected in accordance with ASME Code Section III requirements.
3a. Pressure boundary welds in components identified in Table 2.4.2-1 as ASME Code Section III meet ASME Code Section III non-destructive examination requirements.	Inspection of the as-built pressure boundary welds in components identified in Table 2.4.2-1 as ASME Code Section III will be performed in accordance with ASME Code Section III.	ASME Code report(s) exist and conclude that ASME Code Section III requirements are met for non-destructive examination of pressure boundary welds in components identified in Table 2.4.2-1 as ASME Code Section III.

Table 2.4.2-3

ITAAC For The Emergency Core Cooling System – Gravity-Driven Cooling System

Design Commitment	Inspections, Tests, Analyses	Acceptance Criteria
3b. Pressure boundary welds in piping identified in Table 2.4.2-1 as ASME Code Section III meet ASME Code Section III non-destructive examination requirements.	Inspection of the as-built pressure boundary welds in piping identified in Table 2.4.2-1 as ASME Code Section III will be performed in accordance with ASME Code Section III.	ASME Code report(s) exist and conclude that ASME Code Section III requirements are met for non-destructive examination of pressure boundary welds in piping identified in Table 2.4.2-1 as ASME Code Section III.
4a. The components identified in Table 2.4.2-1 as ASME Code Section III retain their pressure boundary integrity at their design pressure.	A hydrostatic test will be conducted on those code components identified in Table 2.4.2-1 as ASME Code Section III that are required to be hydrostatically tested by ASME Code Section III.	ASME Code Data Report(s) exist and conclude that the results of the hydrostatic test of components identified in Table 2.4.2-1 as ASME Code Section III comply with the requirements of ASME Code Section III.
4b. The piping identified in Table 2.4.2-1 as ASME Code Section III retains its pressure boundary integrity at its design pressure.	A hydrostatic test will be conducted on the code piping identified in Table 2.4.2-1 as ASME Code Section III that is required to be hydrostatically tested by ASME Code Section III.	ASME Code Data Report(s) exist and conclude that the results of the hydrostatic test of piping identified in Table 2.4.2-1 as ASME Code Section III comply with the requirements in ASME Code Section III.
5. The equipment identified in Tables 2.4.2-1 and Table 2.4.2-2 as Seismic Category I can withstand Seismic Category I loads without loss of safety function.	i. Inspection will be performed to verify that the Seismic Category I equipment identified in Table 2.4.2-1 and Table 2.4.2-2 are located in a Seismic Category I structure.	i. The equipment identified as Seismic Category I in Table 2.4.2-1 and Table 2.4.2-2 is located in a Seismic Category I structure.

Table 2.4.2-3

ITAAC For The Emergency Core Cooling System – Gravity-Driven Cooling System

Design Commitment	Inspections, Tests, Analyses	Acceptance Criteria
	ii. Type tests, analyses, or a combination of type tests and analyses, of equipment identified in Table 2.4.2-1 and Table 2.4.2-2 as Seismic Category I, will be performed using analytical assumptions, or will be performed under conditions which bound the Seismic Category I equipment design requirements.	ii. The equipment identified in Table 2.4.2-1 and Table 2.4.2-2 as Seismic Category I can withstand Seismic Category I loads without loss of safety function.
	iii. Inspections and analyses will be performed to verify that the as-built equipment identified in Table 2.4.2-1 and Table 2.4.2-2, including anchorage, is bounded by the testing or analyzed conditions.	iii. The as-built equipment identified in Table 2.4.2-1 and Table 2.4.2-2 as Seismic Category I, including anchorage, can withstand Seismic Category I loads without loss of safety function.
6. (Deleted)		
7. (Deleted)		
8a. The GDCS injection lines provide sufficient flow to maintain water coverage above Top of Active Fuel (TAF) for 72 hours following a design basis LOCA.	For each loop of the GDCS, an open reactor vessel test will be performed utilizing two test valves in place of the parallel squib valves in the GDCS injection line and connected to the GDCS actuation logic. Flow measurements will be taken on flow into the RPV. An analysis of the test configuration will be performed.	Based on analysis and test data, the flow rate, in conjunction with vessel depressurization and other modes of GDCS operation, maintains water coverage above TAF for 72 hours following the design basis LOCA.

Table 2.4.2-3

ITAAC For The Emergency Core Cooling System – Gravity-Driven Cooling System

Design Commitment	Inspections, Tests, Analyses	Acceptance Criteria
8b. The GDCS equalizing lines provide sufficient flow to maintain water coverage above TAF for 72 hours following a design basis LOCA.	For each loop of the GDCS, open reactor vessel testing will be performed utilizing one test valve in place of the squib valve in the GDCS equalizing line and connected to the GDCS actuation logic. Flow measurements will be taken on flow into the RPV. An analysis of the test configuration will be performed.	Based on analysis and test data, that the flow rate, in conjunction with vessel depressurization and other modes of GDCS operation, will maintain water coverage above TAF for 72 hours following the design basis LOCA.
9. The GDCS squib valves used in the injection and equalization lines open as designed.	A vendor type test will be performed on a squib valve.	GDCS squib valves used in the injection and equalization lines open as designed.
10a. Check valves designated on Figure 2.4.2-1 open and close under system pressure, fluid flow, and temperature conditions.	Type tests of valves for opening and closing will be conducted.	Based on the direction of the differential pressure across the valve, each check valve opens and closes.
10b. The GDCS injection line check valves meet the criterion for maximum fully open flow coefficient in the reverse flow direction.	Type tests of the GDCS check valves to determine the fully open flow coefficient in the reverse flow direction will be conducted.	The fully open flow coefficient for the GDCS injection line check valves in the reverse flow direction is less than the value assumed in the LOCA analysis.
11. (Deleted)		
12. GDCS squib valves maintain RPV backflow leak tightness and maintain reactor coolant pressure boundary integrity during normal plant operation.	A test will be performed to demonstrate the squib valves are leak tight during normal plant conditions.	Testing concludes GDCS squib valves have zero leakage at normal plant operating pressure.

Table 2.4.2-3

ITAAC For The Emergency Core Cooling System – Gravity-Driven Cooling System

Design Commitment	Inspections, Tests, Analyses	Acceptance Criteria
13. Each GDCS injection line includes a nozzle flow limiter to limit break size.	Inspections of the as-built GDCS injection flow limiters will be performed.	Each GDCS injection nozzle flow limiter is less than or equal to 4.562E-3 m^2 (0.0491 ft^2) and a nominal reactor-side outlet length to diameter ratio of 4.41.
14. Each GDCS equalizing line includes a nozzle flow limiter to limit break size.	Inspections of the as-built GDCS equalizing flow limiters will be taken.	Each GDCS equalizing line nozzle flow limiter is less than or equal to 2.027E-3 m^2 (0.0218 ft^2) and a nominal reactor-side outlet length to diameter ratio of 6.59.
15. Each of the GDCS divisions is powered from its respective safety-related power division.	Tests will be performed on the GDCS by providing a test signal in only one safety-related power division at a time.	Testing confirms the signal exists only in the safety-related power division under test in the GDCS.
16. Each GDCS mechanical train located inside the containment is physically separated from the other train(s) so as not to preclude accomplishment of the intended safety-related function.	Inspections and analysis will be conducted for each of the GDCS mechanical trains located inside the containment.	Each GDCS mechanical train located inside containment is protected against design basis events and their direct consequences by spatial separation, barriers, restraints, or enclosures so as not to preclude accomplishment of the intended safety-related function.
17. The GDCS pools A, B/C, and D are sized to hold a minimum drainable water volume.	An analysis of combined minimum drainable volume for GDCS pools A, B/C, and D will be performed.	Analysis confirms the combined minimum drainable water volume for GDCS pools A, B/C, and D is 1636 m^3 (57770 ft^3).
18. The GDCS pools A, B/C, and D are sized to hold a specified minimum water level.	An analysis of minimum water level in GDCS pools A, B/C, and D will be performed.	Analysis confirms the minimum water level in GDCS pools A, B/C, and D can be at least 6.5 m (21.3 ft).

Table 2.4.2-3

ITAAC For The Emergency Core Cooling System – Gravity-Driven Cooling System

Design Commitment	Inspections, Tests, Analyses	Acceptance Criteria
19. The elevation change between low water level of GDCS pools and the centerline of GDCS injection line nozzles is sufficient to provide gravity-driven flow.	An analysis of elevation change between low water level of GDCS pools and the centerline of GDCS injection line nozzles will be performed.	Analysis confirms the elevation change between low water level of GDCS pools and the centerline of GDCS injection line nozzles is 13.5 m (44.3 ft).
20. The minimum drainable volume from the suppression pool to the RPV is sufficient to meet long-term post-LOCA core cooling requirements.	An analysis of minimum drainable volume from the suppression pool to the RPV will be performed.	Analysis confirms the minimum drainable volume from the suppression pool to the RPV is 799 m^3 (28,200 ft^3).
21. The long-term GDCS minimum equalizing driving head is based on RPV Level 0.5.	An analysis of the minimum equalizing driving head will be performed.	Analysis confirms the minimum equalizing driving head is 1.0 m (3.28 ft).
22. The GDCS Deluge squib valves open as designed.	A vendor type test will be performed on a squib valve.	GDCS Deluge squib valves used open as designed.
23. (Deleted)		
24. The GDCS injection piping is installed to allow venting of non-condensable gases to GDCS pools and to RPV, to prevent collection in the GDCS injection pipes.	Inspection(s) will be conducted of as-built GDCS injection piping installation to ensure there are no elevated piping loops or high-point traps in piping run from squib valves to GDCS pools and to RPV inlet nozzles.	Based on inspection(s) of as-built GDCS injection piping, the as-built piping conforms to design that allows venting of non-condensable gases to GDCS pools and to RPV.

Table 2.4.2-3

ITAAC For The Emergency Core Cooling System – Gravity-Driven Cooling System

Design Commitment	Inspections, Tests, Analyses	Acceptance Criteria
25. Deluge system has redundant nonsafety-related Programmable Logic Controllers (PLCs) that are connected to thermocouples in each cell of the lower drywell Basemat-Internal Melt Arrest Coolability (BiMAC) system.	Inspections and tests will be performed to confirm the connection of the thermocouples to the PLCs.	One thermocouple from each cell is monitored in one PLC, while the other thermocouple from each cell is monitored in a second PLC.
26. When temperatures exceed the setpoint at one set of thermocouples coincident with setpoints being exceeded at a second set of thermocouples in adjacent cells, each PLC starts a deluge squib valve timer.	i. Tests will be performed to confirm timer initiation using simulated signals. ii. Type tests will be performed of the thermocouples to confirm detection of simulated core melt debris in the BiMAC cells.	i. The timers are initiated when the temperature setpoint is exceeded. ii. The thermocouples are capable of detecting simulated core melt debris in the BiMAC cells.
27. The GDCS deluge valve squib initiation signals are inhibited when either of the safety-related deluge system lower drywell temperature switches sense temperatures lower than a preset value coincident with the presence of both deluge squib valve timer signals.	Tests will be performed using simulated signals to confirm that the GDCS deluge valve squib initiation signals are inhibited when either of the safety-related deluge system lower drywell temperature switches sense temperatures lower than a preset value coincident with the presence of both deluge squib valve timer signals.	The GDCS deluge valve squib initiation signals are inhibited when either of the safety-related deluge system lower drywell temperature switches sense temperatures lower than a preset value coincident with the presence of both deluge squib valve timer signals.

Table 2.4.2-3

ITAAC For The Emergency Core Cooling System – Gravity-Driven Cooling System

Design Commitment	Inspections, Tests, Analyses	Acceptance Criteria
28a. Valves on lines attached to the RPV that require maintenance have maintenance valves such that freeze seals will not be required.	Inspections of piping design isometric drawings will be conducted. {{Design Acceptance Criteria}}	A review of piping design isometric drawings confirms that maintenance valves included such that freeze seals will not be required. {{Design Acceptance Criteria}}
28b. The as-built location of valves on lines attached to the RPV in the GDCS that require maintenance shall be reconciled to design requirements.	A reconciliation evaluation of valves on lines attached to the RPV using as-designed and as-built information will be performed.	A design reconciliation has been completed for the as-built location of valves relative to the design requirements.
29a. (Deleted)		
29b. The BiMAC has a material located on top of the BiMAC pipes to protect against melt impingement during the initial corium relocation event.	Inspections of the as-built system will be conducted.	The as-built BiMAC contains a material located on top of the BiMAC pipes to protect against melt impingement during the initial corium relocation event.
29c. The BiMAC is designed with a cover so that debris will penetrate it in a short period of time while providing protection for the BiMAC from CRD housings falling from the vessel.	Inspections of the as-built system will be conducted.	The as-built BiMAC includes a cover plate providing protection for the BiMAC from CRD housings falling from the vessel while allowing debris to penetrate it in a short period of time.
29d. The BiMAC piping is inclined from horizontal to permit natural circulation flow.	Inspections of the as-built system will be conducted.	The as-built BiMAC includes piping inclined from horizontal, according to the analyzed value, to permit natural circulation flow.

Table 2.4.2-3

ITAAC For The Emergency Core Cooling System – Gravity-Driven Cooling System

Design Commitment	Inspections, Tests, Analyses	Acceptance Criteria
29e. The material located on top of the BiMAC pipes does not generate non-condensable gases in quantities that would result in exceeding the containment ultimate pressure.	Analyses of the as-built system will be conducted.	The as-built BiMAC contains a material located on top of the BiMAC pipes that does not generate non-condensable gases in quantities that would result in exceeding the containment ultimate pressure.

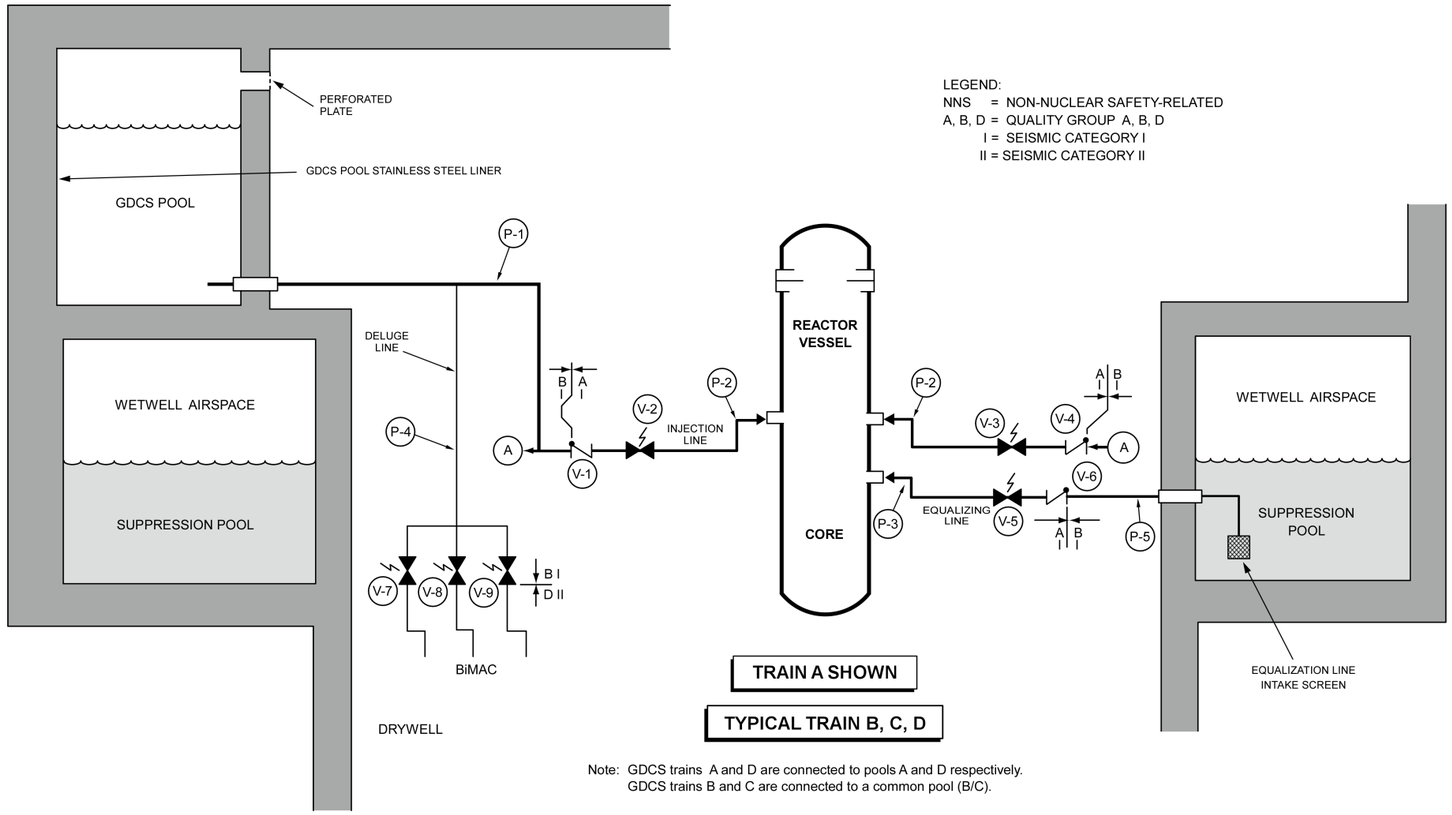

Figure 2.4.2-1. Gravity-Driven Cooling System

2.5 REACTOR SERVICING EQUIPMENT

The following subsections describe the major reactor servicing equipment for the ESBWR.

2.5.1 Fuel Service Equipment

No ITAAC are required for this system.

2.5.2 Miscellaneous Service Equipment

No ITAAC are required for this system.

2.5.3 Reactor Pressure Vessel Servicing Equipment

No ITAAC are required for this system.

2.5.4 RPV Internals Servicing Equipment

No ITAAC are required for this system.

2.5.5 Refueling Equipment

The ESBWR is supplied with a refueling machine for fuel movement in the Reactor Building (RB) and a fuel handling machine used for fuel servicing and transporting tasks in the Fuel Building (FB).

Design Description

The functional arrangement of the RB refueling machine is that it is a gantry-type crane that spans the reactor vessel cavity and fuel and storage pools to handle fuel and perform other ancillary tasks. It is equipped with a traversing trolley on which is mounted a telescoping mast and integral fuel grapple. The machine is a rigid structure built to ensure accurate and repeatable positioning during the refueling process.

The functional arrangement of the FB fuel handling machine is that it is equipped with a traversing trolley on which is mounted a telescoping mast and integral fuel grapple. The machine is a rigid structure built to ensure accurate and repeatable positioning while handling fuel.

(1) The functional arrangement of the RB refueling machine is as described in the Design Description of this Subsection 2.5.5.

(2) The RB refueling machine is classified as nonsafety-related, but is designed as Seismic Category I.

(3) The RB refueling machine has an auxiliary hoist with sufficient load capability.

(4) The RB refueling machine is provided with controls interlocks.

(5) The functional arrangement of the FB fuel handling machine is as described in the Design Description of this Subsection 2.5.5.

(6) The FB fuel handling machine is classified as nonsafety-related, but is designed as Seismic Category I.

(7) The FB fuel handling machine has an auxiliary hoist with sufficient load capability.

(8) The FB fuel handling machine is provided with controls and interlocks.

(9) The RB refueling machine hoist (the mast and fuel grapple) is designed such that a single failure will not result in the loss of the capability to safely retain the load.

(10) The FB fuel handling machine hoist (the mast and fuel grapple) is designed such that a single failure will not result in the loss of the capability to safely retain the load.

(11) The FB fuel handling machine passes over the centers of gravity of heavy loads included in the certified design that are to be lifted.

(12) The RB refueling machine passes over the centers of gravity of heavy loads included in the certified design that are to be lifted.

Inspections, Tests, Analyses, and Acceptance Criteria

Table 2.5.5-1 provides a definition of the inspection, test, and analyses, together with associated acceptance criteria for the refueling equipment.

Table 2.5.5-1

ITAAC For The Refueling Equipment

Design Commitment	Inspections, Tests, Analyses	Acceptance Criteria
1. The functional arrangement of the RB refueling machine is as described in the Design Description of this Subsection 2.5.5.	Inspections of the as-built RB refueling machine will be performed.	The as-built RB refueling machine conforms to the functional arrangement as described in the Design Description of Subsection 2.5.5.
2. The RB refueling machine is classified as nonsafety-related, but is designed as Seismic Category I.	Inspections and analyses of the as-built RB refueling machine will be performed.	The as-built RB refueling machine can withstand seismic dynamic loads without loss of load carrying or structural integrity functions.
3. The RB refueling machine has an auxiliary hoist with sufficient load capability.	Load tests on the as-built auxiliary hoists will be conducted in accordance with ANSI N14.6, 1993.	A successful load test of each as-built auxiliary hoist has been performed in accordance with ANSI N14.6, 1993.
4. The RB refueling machine is provided with controls interlocks	Testing will be performed with actual or simulated signals to demonstrate that the as-built interlocks function as required.	The as-built interlocks function as follows: • Prevent hoisting a fuel assembly over the vessel with a control rod removed; • Prevent collision with fuel pool walls or other structures; • Limit travel of the fuel grapple; • Interlock grapple hook engagement with hoist load and hoist up power; and • Ensure correct sequencing of the transfer operation in the automatic or manual mode.

Table 2.5.5-1

ITAAC For The Refueling Equipment

Design Commitment	Inspections, Tests, Analyses	Acceptance Criteria
5. The functional arrangement of the FB fuel handling machine is as described in the Design Description of this Subsection 2.5.5.	Inspections and analyses of the as-built FB fuel handling machine system will be performed.	The as-built FB fuel handling machine conforms to the functional arrangement as described in the Design Description of the Subsection 2.5.5.
6. The FB fuel handling machine is classified as nonsafety-related, but is designed as Seismic Category I.	Inspections and analyses of the as-built FB fuel handling machine system will be performed.	The as-built FB fuel handling machine can withstand seismic dynamic loads without loss of load carrying or structural integrity functions.
7. The FB fuel handling machine has an auxiliary hoist with sufficient load capability.	Load tests on the as-built auxiliary hoists will be conducted.	A successful load test of the as-built auxiliary hoist has been performed at 125% of rated load capacity.
8. The FB fuel handling machine is provided with controls and interlocks.	Test will be performed with actual or simulated signals to demonstrate that the as-built interlocks function as required.	The required interlocks function as follows:Prevent collision with fuel pool walls or other structures; • Limit travel of the fuel grapple; • Interlock grapple hook engagement with hoist load and hoist up power; and • Ensure correct sequencing of the transfer operation in the automatic or manual mode.

Table 2.5.5-1

ITAAC For The Refueling Equipment

Design Commitment	Inspections, Tests, Analyses	Acceptance Criteria
9. The RB refueling machine hoist (the mast and fuel grapple) is designed such that a single failure will not result in the loss of the capability to safely retain the load.	The following tests, type tests, and inspections will be performed:	The following tests have been successfully completed for the as-built RB refueling machine hoist (the mast and fuel grapple) so that a single failure will not result in the loss of the capability to safely retain the load:
	i. Nondestructive Examination on the welded structural connections of the RB refueling machine will be performed in accordance with ASME NOG-1, 2004, Paragraph 4251.4.	i. Nondestructive Examination on the welded structural connections of the RB refueling machine performed in accordance with ASME NOG-1, 2004, Paragraph 4251.4.
	ii. The RB refueling machine hoist will be static load-tested to 125% of the manufacturer's rated load.	ii. The RB refueling machine hoist has been static load-tested to 125% of the manufacturer's rated load.
	iii. A Full-Load Test on the RB refueling machine hoist will be performed in accordance with ASME NOG-1, 2004, Paragraph 7422.	iii. A Full-Load Test on the RB refueling machine hoist performed in accordance with ASME NOG-1, 2004, Paragraph 7422.
	iv. A No-Load Test on the RB refueling machine hoist will be performed in accordance with ASME NOG-1, 2004, Paragraphs 7421 and 7421.1.	iv. A No-Load Test on the RB refueling machine hoist performed in accordance with ASME NOG-1, 2004, Paragraphs 7421 and 7421.1.

Table 2.5.5-1

ITAAC For The Refueling Equipment

Design Commitment	Inspections, Tests, Analyses	Acceptance Criteria
	v. Inspection of the rope drum, sheeve blocks, and hook component dimensions and material composition has been completed.	v. Inspection records show the rope drum, sheeve blocks, and hook component dimensions and material compositions match design specifications.
	vi. Inspection of the wire rope(s) for proper reeving has been completed.	vi. Inspection records show the wire rope (s) are correctly reeved.
10. The FB fuel handling machine hoist (the mast and fuel grapple) is designed such that a single failure will not result in the loss of the capability to safely retain the load.	The following tests, type test, and inspections will be performed:	The following tests have been successfully completed for the as-built FB fuel handling machine hoist (the mast and fuel grapple) so that a single failure will not result in the loss of the capability to safely retain the load:
	i. Nondestructive Examination on the welded structural connections of the FB fuel handling machine will be performed in accordance with ASME NOG-1, 2004, Paragraph 4251.4.	i. Nondestructive Examination on the welded structural connections of the FB fuel handling machine performed in accordance with ASME NOG-1, 2004, Paragraph 4251.4.
	ii. The FB fuel handling machine hoist will be static load-tested to 125% of the manufacturer's rated load.	ii. The FB fuel handling machine hoist has been static load-tested to 125% of the manufacturer's rated load.
	iii. A Full-Load Test on the FB fuel handling machine hoist will be performed in accordance with ASME NOG-1, 2004, Paragraph 7422.	iii. A Full-Load Test on the FB fuel handling machine hoist performed in accordance with ASME NOG-1, 2004, Paragraph 7422.

Table 2.5.5-1

ITAAC For The Refueling Equipment

Design Commitment	Inspections, Tests, Analyses	Acceptance Criteria
	iv. A No-Load Test on the FB fuel handling machine hoist will be performed in accordance with ASME NOG-1, 2004, Paragraphs 7421 and 7421.1. v. Inspection of the rope drum, sheeve blocks, and hook component dimensions and material composition has been completed. vi. Inspection of the wire rope(s) for proper reeving has been completed.	iv. A No-Load Test on the FB fuel handling machine hoist performed in accordance with ASME NOG-1, 2004, Paragraphs 7421 and 7421.1. v. Inspection records show the rope drum, sheeve blocks, and hook component dimensions and material composition match design specifications. vi. Inspection records show the wire rope (s) are correctly reeved.
11. The FB fuel handling machine passes over the centers of gravity of heavy loads included in the certified design that are to be lifted.	Tests will be conducted of the as-built FB fuel handling machine.	The FB fuel handling machine passes over the centers of gravity of heavy loads included in the certified design that are to be lifted.
12. The RB refueling machine passes over the centers of gravity of heavy loads included in the certified design that are to be lifted.	Tests will be conducted of the as-built RB refueling machine.	The RB refueling machine passes over the centers of gravity of heavy loads included in the certified design that are to be lifted.

2.5.6 Fuel Storage Facility

New and spent fuel storage facilities are provided for fuel and associated equipment.

Design Description

(1) New fuel storage racks are designed to withstand a design bases seismic event.

(2) Spent fuel storage racks are designed to withstand a design bases seismic event.

(3) Deleted.

(4) Deleted.

(5) The maximum spent fuel rack water coolant flow temperature at the rack exit shall be ≤ 121°C (250°F).

(6) The maximum stresses in the spent fuel racks do not exceed ASME Code, Section III, design allowable during accident conditions.

(7) The Spent Fuel Racks are capable of maintaining fuel subcritical.

(8) New Fuel Racks are capable of maintaining fuel subcritical.

Inspections, Tests, Analyses, and Acceptance Criteria

Table 2.5.6-1 provides a definition of the inspections, tests, and analyses, together with associated acceptance criteria for the new and spent fuel storage racks.

Table 2.5.6-1

ITAAC For The Fuel Storage Facility

Design Commitment	Inspections, Tests, Analyses	Acceptance Criteria
1. New fuel storage racks are designed to withstand a design bases seismic event.	An inspection and analysis of the new fuel storage racks configuration will be performed to ensure the design conforms to the seismic analyses.	The new fuel racks can withstand seismic design basis dynamic loads, and that the as-built configuration conforms to the analyses.
2. Spent fuel storage racks are designed to withstand a design bases seismic event.	An inspection and analysis of the spent fuel storage racks configuration will be performed to ensure the design conforms to the seismic analyses.	The spent fuel racks can withstand seismic design basis dynamic loads and the as-built configuration conforms to the analyses.
3. (Deleted)		
4. (Deleted)		
5. The maximum spent fuel rack water coolant flow temperature at the rack exit shall be ≤ 121°C (250°F).	Analyses will be performed to determine the maximum temperature of the spent fuel racks.	Analyses confirm the maximum temperature in the spent fuel racks is ≤ 121°C (250°F) at rack exit under normal operating conditions.
6. The maximum stresses in the spent fuel racks do not exceed ASME Code, Section III, design allowable during accident conditions.	Analyses will be performed to confirm that maximum stresses in the spent fuel racks do not exceed ASME Code, Section III, design allowables during accident conditions.	Analysis records confirm that the maximum stresses in the spent fuel racks will not exceed ASME Code, Section III, design allowable during accident conditions.

Table 2.5.6-1

ITAAC For The Fuel Storage Facility

Design Commitment	Inspections, Tests, Analyses	Acceptance Criteria
7. The Spent Fuel Racks are capable of maintaining fuel subcritical.	i. Inspections will be performed on the as-built Spent Fuel Racks and arrays.	i. The as-built Spent Fuel Racks dimensions are within the tolerances used in the Fuel Storage Racks Criticality Analysis for the following features: • Borated stainless steel rack pitch • Borated stainless steel rack wall thickness • Exterior stainless steel wall thickness • Inner fuel box width • Edge fuel box width • Rack array spacing
	ii. Inspections will be performed on the as-built Spent Fuel Racks and arrays.	ii. The as-built interlocking panels in the active fuel region that form the Spent Fuel Racks interior matrix conform to the design in the Fuel Storage Racks Criticality Analysis for the following features: • Panels are made of borated stainless steel • Borated stainless steel type • Boron content • Minimum density • Maximum gap between panels

Table 2.5.6-1

ITAAC For The Fuel Storage Facility

Design Commitment	Inspections, Tests, Analyses	Acceptance Criteria
	iii. Inspections will be performed on the as-built Spent Fuel Racks and arrays.	iii. The as-built interlocking panels that form the Spent Fuel Racks exterior walls conform to the design in the Fuel Storage Racks Criticality Analysis for the following features: • Stainless steel type • Minimum density
8. New Fuel Racks are capable of maintaining fuel subcritical.	i. Inspections will be performed on the as-built New Fuel Racks.	i. The as-built New Fuel Racks dimensions are within the tolerances used in the Fuel Storage Racks Criticality Analysis for the following features: • Between rack pitch • In-rack pitch • Rack array spacing • Rack inner fuel box width • Rack wall thickness • Four-sided bottom enclosure
	ii. Inspections will be performed on the as-built New Fuel Racks.	ii. The as-built New Fuel Rack walls conform to the design in the Fuel Storage Racks Criticality Analysis for the following design features: • Stainless steel type • Minimum density

2.5.7 Under-Vessel Servicing Equipment

No ITAAC are required for this system.

2.5.8 FMCRD Maintenance Area

No ITAAC are required for this system.

2.5.9 Fuel Cask Cleaning

No ITAAC are required for this system.

2.5.10 Fuel Transfer System

Design Description

The ESBWR is equipped with an Inclined Fuel Transfer System (IFTS). The functional arrangement of the IFTS consists of a terminus at the upper end in the Reactor Building refueling pool that allows the fuel to be tilted from a vertical position to an inclined position prior to transport to the spent fuel pool in the Fuel Building. There is means to lower the transport device (i.e., a carriage), means to seal off the top end of the transfer tube, and a control system to effect transfer. The IFTS has lower terminus in the fuel building storage pool, and a means to tilt the fuel to be removed from the transport cart. There are controls contained in local control panels to control fuel transfer. There is a means to seal off the upper and lower end of the tube while allowing filling and venting of the tube.

The IFTS is anchored to the bottom of the refueling pool floor in the Reactor Building. The IFTS penetrates the Reactor Building at an angle down to the fuel storage pool in the Fuel Building. To ensure that there are no modes of normal or abnormal operation that will trap fuel assemblies without the ability to add water or prevent unconditional venting of pressure that may develop due to boiling, the IFTS is vented to the building through the hoist cable piping that originates at the top of the transfer tube which extends above the level of the water in the RB with no valves or obstructions.

(1) The functional arrangement of the IFTS is as described in this Subsection 2.5.10.

(2) The IFTS tubes and supporting structure can withstand an SSE without failure of the basic structure or compromising the integrity of adjacent equipment and structures. Therefore, the portion of the IFTS transfer tube assembly from where it interfaces with the upper fuel pool, the portion of the tube assembly extending through the building, the drain line connection, and the lower tube equipment (valve, support structure, and bellows) are designated as nonsafety-related and Seismic Category I. The winch, upper upender, and lower terminus are designated as nonsafety-related and Seismic Category II. The remaining equipment is designated as nonsafety-related and Seismic Category NS.

(3) The IFTS is functionally capable of moving fuel.

(4) No single active failure can cause the draining of water from the upper pool in an uncontrolled manner into the spent fuel pool or other areas. There is sufficient redundancy and diversity in equipment and controls to prevent loss of load (carriage with fuel is released in an uncontrolled manner) and there are no modes of operation that allow simultaneous opening of valves that could cause draining of water from the upper pool in an uncontrolled manner.

(5) The IFTS can be maintained filled with water for cooling in the event the fuel transport cart with fuel loaded within the IFTS cannot be moved.

(6) For personnel radiation protection, access (ingress and egress) to areas adjacent to the transfer tube is controlled through a system of physical barriers, interlocks and alarms.

Inspections, Tests, Analyses, and Acceptance Criteria

Table 2.5.10-1 provides a definition of the inspections, tests, and analyses, together with associated acceptance criteria for the Fuel Transfer System.

Table 2.5.10-1

ITAAC For The Fuel Transfer System

Design Commitment	Inspections, Tests, Analyses	Acceptance Criteria
1. The functional arrangement of the IFTS is as described in this Subsection 2.5.10.	Inspections of the as-built IFTS system will be performed.	The as-built IFTS conforms to the functional arrangement as described in this Subsection 2.5.10.
2. The IFTS tubes and supporting structure can withstand an SSE without failure of the basic structure or compromising the integrity of adjacent equipment and structures. Therefore, the portion of the IFTS transfer tube assembly from where it interfaces with the upper fuel pool, the portion of the tube assembly extending through the building, the drain line connection, and the lower tube equipment (valve, support structure, and bellows) are designated as nonsafety-related and Seismic Category I. The winch, upper upender, and lower terminus are designated as nonsafety-related and Seismic Category II. The remaining equipment is designated as nonsafety-related and Seismic Category NS.	i. Inspection will be performed to verify that the Seismic Category I and II equipment is located in a Seismic Category I structure. ii. Type tests, analyses, or a combination of type tests and analyses of Seismic Category I and II equipment will be performed.	i. Inspection results verify that the Seismic Category I and II equipment is located in a Seismic Category I structure. ii. The Seismic Category I and II equipment can withstand seismic design basis loads without loss of safety function.

Table 2.5.10-1

ITAAC For The Fuel Transfer System

Design Commitment	Inspections, Tests, Analyses	Acceptance Criteria
3. The IFTS is functionality capable of moving fuel.	Tests will be performed using installed controls and power supplies utilizing dummy fuel bundles for successful demonstration of fuel movement from the refuel pool to the spent fuel pool and return.	The as-built IFTS passes functional testing.
4. No single active failure can cause the draining of water from the upper pool in an uncontrolled manner into the spent fuel pool or other areas. There is sufficient redundancy and diversity in equipment and controls to prevent loss of load (carriage with fuel is released in an uncontrolled manner) and there are no modes of operation that allow simultaneous opening of valves that could cause draining of water from the upper pool in an uncontrolled manner.	Tests and inspections will be performed on the as-built IFTS to confirm it prevents loss of load and draining water from the upper pool in an uncontrolled manner.	The as-built IFTS prevents loss of load and draining water from the upper pool in an uncontrolled manner.
5. The IFTS can be maintained filled with water for cooling in the event the fuel transport cart with fuel loaded within the IFTS cannot be moved.	Tests and inspection will be performed on the as-built IFTS that confirm the as-built IFTS can be maintained filled with water in the event the fuel transport cart with fuel loaded within the IFTS cannot be moved.	The as-built IFTS can be maintained filled with water in the event the fuel transport cart with fuel loaded within the IFTS cannot be moved.

Table 2.5.10-1

ITAAC For The Fuel Transfer System

Design Commitment	Inspections, Tests, Analyses	Acceptance Criteria
6. For personnel radiation protection, access (ingress and egress) to areas adjacent to the transfer tube is controlled through a system of physical barriers, interlocks and alarms.	i. Inspections will be performed to verify that physical barriers exist between the transfer tube and adjacent areas.	i. Physical barriers exist between the transfer tube and adjacent areas.
	ii. Tests and inspections will confirm that the as-built interlocks and alarms exist for controlling access to the transfer tube area and indicating operation of the IFTS.	ii. The as-built interlocks and alarms exist for controlling access to the transfer tube area and indicating operation of the IFTS.

2.5.11 (Deleted)

2.5.12 (Deleted)

2.6 REACTOR AND CONTAINMENT AUXILIARY SYSTEMS

The following subsections describe the auxiliary systems for the ESBWR.

2.6.1 Reactor Water Cleanup/Shutdown Cooling System

Design Description

The Reactor Water Cleanup/Shutdown Cooling (RWCU/SDC) system purifies reactor coolant during normal operation and shutdown, provides shutdown cooling to bring the reactor to cold shutdown, and removes core decay heat to maintain cold shutdown. The RWCU/SDC system also provides long term post-LOCA shutdown cooling in the unlikely event there has been fuel failure. The RWCU/SDC system is as shown in Figure 2.6.1-1.

The containment isolation portions of the RWCU/SDC System are addressed in Subsection 2.15.1.

The environmental qualification of RWCU/SCS equipment is addressed in Section 3.8.

MCR alarms and remote operation features of mechanical equipment provided for the RWCU/SDC System are defined in Table 2.6.1-1.

(1) The functional arrangement of the RWCU/SDC system is as described in the Design Description of Subsection 2.6.1, Table 2.6.1-1, and as shown in Figure 2.6.1-1.

(2) (Deleted)

(3) a. The components identified in Table 2.6.1-1 as ASME Code Section III retain their pressure boundary integrity at their design pressure.

b. The piping identified in Table 2.6.1-1 as ASME Code Section III retains its pressure boundary integrity at its design pressure.

(4) (Deleted)

(5) Manual closure of the RPV bottom head isolation valve can be accomplished remotely.

(6) Each of the RWCU/SDC system containment isolation valves identified in Table 2.6.1-1 is powered from its respective safety-related division.

(7) The equipment identified in Table 2.6.1-1 as Seismic Category I can withstand Seismic Category I loads without loss of safety function.

(8) a1. The components identified in Table 2.6.1-1 as ASME Code Section III are designed in accordance with ASME Code Section III requirements.

a2. The components identified in Table 2.6.1-1 as ASME Code Section III shall be reconciled with the design requirements.

a3. The components identified in Table 2.6.1-1 as ASME Code Section III are fabricated, installed, and inspected in accordance with ASME Code Section III requirements.

b1. The piping identified in Table 2.6.1-1 as ASME Code Section III is designed in accordance with ASME Code Section III requirements.

b2. The as-built piping identified in Table 2.6.1-1 as ASME Code Section III shall be reconciled with the piping design requirements.

b3. The piping identified in Table 2.6.1-1 as ASME Code Section III is fabricated, installed, and inspected in accordance with ASME Code Section III requirements.

(9) a. Pressure boundary welds in components identified in Table 2.6.1-1 as ASME Code Section III meet ASME Code Section III non-destructive examination requirements.

b. Pressure boundary welds in piping identified in Table 2.6.1-1 as ASME Code Section III meet ASME Code Section III non-destructive examination requirements.

(10) a. Valves on lines attached to the RPV system that require maintenance have maintenance valves such that freeze seals will not be required.

b. The as-built location of valves on lines attached to the RPV system of the RWCU/SDC system that require maintenance shall be reconciled to design requirements.

Inspections, Tests, Analyses, and Acceptance Criteria

Table 2.6.1-2 provides the inspections, tests, and analyses that will be undertaken for the RWCU/SDC system.

Table 2.6.1-1

Reactor Water Cleanup/Shutdown Cooling System

Equipment Name (Description)	Equipment Identifier See Figure 2.6.1-1	ASME Code Section III	Seismic Cat. I	RCPB Component	Containment Isolation Valve	Remotely Operated	Loss of Motive Power Position	MCR Alarms
Demineralizers	–	Yes	Yes	No	No	No	–	Yes
Higher Capacity Pumps	–	Yes	Yes	No	No	Yes	Off	Yes
Lower Capacity Pumps	–	Yes	Yes	No	No	Yes	Off	Yes
Adjustable Speed Motor Drives	–	Yes	Yes	No	No	Yes	Off	Yes
Regenerative Heat Exchangers (RHXs)	–	Yes	Yes	No	No	No	–	No
Non-Regenerative Heat Exchangers (NRHXs)	–	Yes	Yes	No	No	No	–	No
Midvessel Suction Containment Inboard Isolation Valve	V-1(A)	Yes	Yes	Yes	Yes	Yes	Close	Yes
RPV Bottom Suction Containment Inboard Isolation Valve	V-4(A)	Yes	Yes	Yes	Yes	Yes	Close	Yes
Midvessel Suction Containment Outboard Isolation Valve	V-2(A)	Yes	Yes	Yes	Yes	Yes	Close	Yes
Midvessel Suction Flow Control Valve	V-3(A)	Yes	Yes	No	No	Yes	Close	Yes
RPV Bottom Suction Containment Outboard Isolation Valve	V-5(A)	Yes	Yes	Yes	Yes	Yes	Close	Yes

Table 2.6.1-1

Reactor Water Cleanup/Shutdown Cooling System

Equipment Name (Description)	Equipment Identifier See Figure 2.6.1-1	ASME Code Section III	Seismic Cat. I	RCPB Component	Containment Isolation Valve	Remotely Operated	Loss of Motive Power Position	MCR Alarms
RPV Bottom Suction Valve – Motor Operated	V-6(A)	Yes	Yes	No	No	Yes	As-Is	Yes
RPV Bottom Suction Sample Inboard Containment Isolation Valve	V-7(A)	Yes	Yes	Yes	Yes	Yes	Close	Yes
RPV Bottom Suction Sample Outboard Containment Isolation Valve	V-8(A)	Yes	Yes	Yes	Yes	Yes	Close	Yes
Higher Capacity Pump Suction Valve	V-9(A)	Yes	Yes	No	No	Yes	As-Is	No
Return Line Isolation Valve	V-15(A)	Yes	Yes	No	No	Yes	As-Is	No
Lower Capacity Pump Suction Valve	V-10(A)	Yes	Yes	No	No	Yes	As-Is	No
Demineralizer Inlet Valve	V-11(A)	Yes	Yes	No	No	No	As-Is	Yes
Demineralizer Outlet Valve	V-12(A)	Yes	Yes	No	No	No	As-Is	Yes
Demineralizer Bypass Flow Control Valve	V-13(A)	Yes	Yes	No	No	Yes	Open	Yes
Overboard Flow Control Valve	V-14(A)	Yes	Yes	No	No	Yes	Closed	Yes

Table 2.6.1-1

Reactor Water Cleanup/Shutdown Cooling System

Equipment Name (Description)	Equipment Identifier See Figure 2.6.1-1	ASME Code Section III	Seismic Cat. I	RCPB Component	Containment Isolation Valve	Remotely Operated	Loss of Motive Power Position	MCR Alarms
Suction Lines from RPV Nozzles to the Outboard Containment Quality Group Break	P-1(A)	Yes	Yes	Yes	–	–	–	–
Midvessel Suction Containment Inboard Isolation Valve	V-1(B)	Yes	Yes	Yes	Yes	Yes	Close	Yes
RPV Bottom Suction Containment Inboard Isolation Valve	V-4(B)	Yes	Yes	Yes	Yes	Yes	Close	Yes
Midvessel Suction Containment Outboard Isolation Valve	V-2 (B)	Yes	Yes	Yes	Yes	Yes	Close	Yes
Midvessel Suction Flow Control Valve	V-3(B)	Yes	Yes	No	No	Yes	Close	Yes
RPV Bottom Suction Containment Outboard Isolation Valve	V-5(B)	Yes	Yes	Yes	Yes	Yes	Close	Yes
RPV Bottom Suction Valve – Motor Operated	V-6(B)	Yes	Yes	No	No	Yes	As-Is	Yes
RPV Bottom Suction Sample Inboard Containment Isolation Valve	V-7(B)	Yes	Yes	Yes	Yes	Yes	Close	Yes

Table 2.6.1-1

Reactor Water Cleanup/Shutdown Cooling System

Equipment Name (Description)	Equipment Identifier See Figure 2.6.1-1	ASME Code Section III	Seismic Cat. I	RCPB Component	Containment Isolation Valve	Remotely Operated	Loss of Motive Power Position	MCR Alarms
RPV Bottom Suction Sample Outboard Containment Isolation Valve	V-8(B)	Yes	Yes	Yes	Yes	Yes	Close	Yes
Higher Capacity Pump Suction Valve	V-9(B)	Yes	Yes	No	No	Yes	As-Is	No
Return Line Isolation Valve	V-15(B)	Yes	Yes	No	No	Yes	As-Is	No
Lower Capacity Pump Suction Valve	V-10(B)	Yes	Yes	No	No	Yes	As-Is	No
Demineralizer Inlet Valve	V-11(B)	Yes	Yes	No	No	No	As-Is	Yes
Demineralizer Outlet Valve	V-12(B)	Yes	Yes	No	No	No	As-Is	Yes
Demineralizer Bypass Flow Control Valve	V-13(B)	Yes	Yes	No	No	Yes	Open	Yes
Overboard Flow Control Valve	V-14(B)	Yes	Yes	No	No	Yes	Closed	Yes
Suction Lines from RPV Nozzles to the Outboard Containment Quality Group Break	P-1(B)	Yes	Yes	Yes	–	–	–	–
FAPC Suppression Pool to RWCU Pump Suction Isolation Valve	V-16	Yes	Yes	No	No	Yes	As-is	Yes

Table 2.6.1-1

Reactor Water Cleanup/Shutdown Cooling System

Equipment Name (Description)	Equipment Identifier See Figure 2.6.1-1	ASME Code Section III	Seismic Cat. I	RCPB Component	Containment Isolation Valve	Remotely Operated	Loss of Motive Power Position	MCR Alarms
RWCU Pump Discharge to FAPCS Containment Cooling Line Isolation Valve	V-17	Yes	Yes	No	No	Yes	As-is	Yes
RWCU Pump Discharge to RWCU Mid-vessel Suction Line Isolation Valve	V-18	Yes	Yes	No	No	Yes	As-is	Yes
Reactor Bottom Flow Sample Line to the Outboard Containment Isolation Valve	P-2(A)	Yes	Yes	Yes	–	–	–	–
RWCU/SDC Return Line from the Return Line Isolation Valve up to and including the connection to the Feedwater Line	P-4(A)	Yes	Yes	No	–	–	–	–
RWCU/SDC Overboarding Line	P-5(A)	Yes	Yes	No	–	–	–	–
RWCU/SDC Lines from the Outboard Containment Isolation Valve Up to the Return Line Isolation Valve	P-3(A)	Yes	Yes	No	–	–	–	–

Table 2.6.1-1

Reactor Water Cleanup/Shutdown Cooling System

Equipment Name (Description)	Equipment Identifier See Figure 2.6.1-1	ASME Code Section III	Seismic Cat. I	RCPB Component	Containment Isolation Valve	Remotely Operated	Loss of Motive Power Position	MCR Alarms
Suction Cross-connection Line from FAPCS Suppression Pool Suction	P-6	Yes	Yes	No	–	–	–	–
Discharge Cross-connection Line to FAPCS Containment Cooling Line	P-7(A)	Yes	Yes	No	–	–	–	–
Discharge Cross-connection Line to RWCU Mid-vessel Suction	P-8(A)	Yes	Yes	No	–	–	–	–
Reactor Bottom Flow Sample Line to the Outboard Containment Isolation Valve	P-2(B)	Yes	Yes	Yes	–	–	–	–
RWCU/SDC Return Line from the Return Line Isolation Valve up to and including the connection to the Feedwater Line	P-4(B)	Yes	Yes	No	–	–	–	–
RWCU/SDC Overboarding Line	P-5(B)	Yes	Yes	No	–	–	–	–

Table 2.6.1-1

Reactor Water Cleanup/Shutdown Cooling System

Equipment Name (Description)	Equipment Identifier See Figure 2.6.1-1	ASME Code Section III	Seismic Cat. I	RCPB Component	Containment Isolation Valve	Remotely Operated	Loss of Motive Power Position	MCR Alarms
RWCU/SDC Lines from the Outboard Containment Isolation Valve Up to the Return Line Isolation Valve	P-3(B)	Yes	Yes	No	–	–	–	–
Suction Cross-connection Line from FAPCS Suppression Pool Suction	P-6	Yes	Yes	No	–	–	–	–
Discharge Cross-connection Line to FAPCS Containment Cooling Line	P-7(B)	Yes	Yes	No	–	–	–	–
Discharge Cross-connection Line to RWCU Mid-vessel Suction	P-8(B)	Yes	Yes	No	–	–	–	–

Table 2.6.1-2

ITAAC For The Reactor Water Cleanup/Shutdown Cooling System

Design Commitment	Inspections, Tests, Analyses	Acceptance Criteria
1. The functional arrangement of the RWCU/SDC system is as described in the Design Description of Subsection 2.6.1, Table 2.6.1-1, and as shown in Figure 2.6.1-1.	Inspection of the as-built system will be performed.	The as-built RWCU/SDC system conforms to the functional arrangement described in the Design Description of Section 2.6.1, Table 2.6.1-1, and as shown in Figure 2.6.1-1.
2. (Deleted)		
3a. The components identified in Table 2.6.1-1 as ASME Code Section III retain their pressure boundary integrity at their design pressure.	A hydrostatic test will be conducted on those code components identified in Table 2.6.1-1 as ASME Code Section III that are required to be hydrostatically tested by ASME Code Section III.	ASME Code Data Report(s) exist and conclude that the results of the hydrostatic test of components identified in Table 2.6.1-1 as ASME Code Section III comply with the requirements of ASME Code Section III.
3b. The piping identified in Table 2.6.1-1 as ASME Code Section III retains its pressure boundary integrity at its design pressure.	A hydrostatic test will be conducted on the code piping identified in Table 2.6.1-1 as ASME Code Section III that is required to be hydrostatically tested by ASME Code Section III.	ASME Code Data Report(s) exist and conclude that the results of the hydrostatic test of piping identified in Table 2.6.1-1 as ASME Code Section III comply with the requirements in ASME Code Section III.
4. (Deleted)		
5. Manual closure of the RPV bottom head isolation valve can be accomplished remotely.	Remote manual closure testing of the RPV bottom head isolation valve will be performed by closing the inboard containment isolation valve in the RWCU/SDC system suction line from the RPV bottom head.	The RPV bottom head isolation valve can be manually closed remotely.

Table 2.6.1-2

ITAAC For The Reactor Water Cleanup/Shutdown Cooling System

Design Commitment	Inspections, Tests, Analyses	Acceptance Criteria
6. Each of the RWCU/SDC System containment isolation valves identified in Table 2.6.1-1 is powered from its respective safety-related division.	Testing will be performed on the RWCU/SDC system containment isolation valves by providing a test signal in only one safety-related division at a time.	A test signal exists in the safety-related division for the containment isolation valves identified in Table 2.6.1-1 powered from the safety-related division under test in the RWCU/SDC System.
7. The equipment identified in Table 2.6.1-1 as Seismic Category I can withstand Seismic Category I loads without loss of safety function.	i. Inspection will be performed to verify that the Seismic Category I equipment identified in Table 2.6.1-1 are located in a Seismic Category I structure.	i. The equipment identified as Seismic Category I in Table 2.6.1-1 is located in a Seismic Category I structure.
	ii. Type tests, analyses, or a combination of type tests and analyses, of equipment identified in Table 2.6.1-1 as Seismic Category I, will be performed using analytical assumptions, or will be performed under conditions which bound the Seismic Category I equipment design requirements.	ii. The equipment identified in Table 2.6.1-1 as Seismic Category I can withstand Seismic Category I loads without loss of safety function.
	iii. Inspections and analyses will be performed to verify that the as-built equipment identified in Table 2.6.1-1, including anchorage, is bounded by the testing or analyzed conditions.	iii. The as-built equipment identified in Table 2.6.1-1 as Seismic Category I, including anchorage, can withstand Seismic Category I loads without loss of safety function.

Table 2.6.1-2

ITAAC For The Reactor Water Cleanup/Shutdown Cooling System

Design Commitment	Inspections, Tests, Analyses	Acceptance Criteria
8a1. The components identified in Table 2.6.1-1 as ASME Code Section III are designed in accordance with ASME Code Section III requirements.	Inspection of ASME Code Design Reports (NCA-3550) and required documents will be conducted.	ASME Code Design Reports (NCA-3550) (certified, when required by ASME Code) exist and conclude that the design of the components identified in Table 2.6.1-1 as ASME Code Section III complies with the requirements of ASME Code Section III including those stresses applicable to loads related to fatigue (including environmental effects), thermal expansion, seismic, and combined.
8a2. The components identified in Table 2.6.1-1 as ASME Code Section III shall be reconciled with the design requirements.	A reconciliation analysis of the components identified in Table 2.6.1-1 as ASME Code Section III using as-designed and as-built information and ASME Code Design Reports (NCA-3550) will be performed.	ASME Code Design Report(s) (NCA-3550) (certified, when required by ASME Code) exist and conclude that design reconciliation has been completed, in accordance with ASME Code, for as-built reconciliation of the components identified in Table 2.6.1-1 as ASME Code Section III. The report documents the results of the reconciliation analysis.
8a3. The components identified in Table 2.6.1-1 as ASME Code Section III are fabricated, installed, and inspected in accordance with ASME Code Section III requirements.	Inspection of the components identified in Table 2.6.1-1 as ASME Code Section III will be conducted.	ASME Code Data Report(s) (including N-5 Data Reports, where applicable) (certified, when required by ASME Code) and inspection reports exist and conclude that the components identified in Table 2.6.1-1 as ASME Code Section III are fabricated, installed, and inspected in accordance with ASME Code Section III requirements.

Table 2.6.1-2

ITAAC For The Reactor Water Cleanup/Shutdown Cooling System

Design Commitment	Inspections, Tests, Analyses	Acceptance Criteria
8b1. The piping identified in Table 2.6.1-1 as ASME Code Section III is designed in accordance with ASME Code Section III requirements.	Inspection of ASME Code Design Reports (NCA-3550) and required documents will be conducted. {{Design Acceptance Criteria}}	ASME Code Design Report(s) (NCA-3550) (certified, when required by ASME Code) exist and conclude that the design of the piping identified in Table 2.6.1-1 as ASME Code Section III complies with the requirements of the ASME Code, Section III, including those stresses applicable to loads related to fatigue (including environmental effects), thermal expansion, seismic, and combined. {{Design Acceptance Criteria}}
8b2. The as-built piping identified in Table 2.6.1-1 as ASME Code Section III shall be reconciled with the piping design requirements.	A reconciliation analysis of the piping identified in Table 2.6.1-1 as ASME Code Section III using as-designed and as-built information and ASME Code Design Reports (NCA-3550) will be performed.	ASME Code Design Report(s) (NCA-3550) (certified, when required by ASME Code) exist and conclude that design reconciliation has been completed, in accordance with ASME Code, for as-built reconciliation of the piping identified in Table 2.6.1-1 as ASME Code Section III. The report documents the results of the reconciliation analysis.

Table 2.6.1-2

ITAAC For The Reactor Water Cleanup/Shutdown Cooling System

Design Commitment	Inspections, Tests, Analyses	Acceptance Criteria
8b3. The piping identified in Table 2.6.1-1 as ASME Code Section III is fabricated, installed, and inspected in accordance with ASME Code Section III requirements.	Inspections of the piping identified in Table 2.4.2-1 as ASME Code Section III will be conducted.	ASME Code Data Report(s) (certified, when required by ASME Code) and inspection reports (including N-5 Data Reports where applicable) exist and conclude that the piping identified in Table 2.4.2-1 as ASME Code Section III is fabricated, installed, and inspected in accordance with ASME Code Section III requirements.
9a. Pressure boundary welds in components identified in Table 2.6.1-1 as ASME Code Section III meet ASME Code Section III non-destructive examination requirements.	Inspection of the as-built pressure boundary welds in components identified in Table 2.6.1-1 as ASME Code Section III will be performed in accordance with ASME Code Section III.	ASME Code report(s) exist and conclude that ASME Code Section III requirements are met for non-destructive examination of pressure boundary welds in components identified in Table 2.6.1-1 as ASME Code Section III.
9b. Pressure boundary welds in piping identified in Table 2.6.1-1 as ASME Code Section III meet ASME Code Section III non-destructive examination requirements.	Inspection of the as-built pressure boundary welds in piping identified in Table 2.6.1-1 as ASME Code Section III will be performed in accordance with ASME Code Section III.	ASME Code report(s) exist and conclude that ASME Code Section III requirements are met for non-destructive examination of pressure boundary welds in piping identified in Table 2.6.1-1 as ASME Code Section III.
10a. Valves on lines attached to the RPV system that require maintenance have maintenance valves such that freeze seals will not be required.	Inspections of piping design isometric drawings will be conducted. {{Design Acceptance Criteria}}	A review of piping design isometric drawing confirms that maintenance valves are included such that freeze seals will not be required. {{Design Acceptance Criteria}}

Table 2.6.1-2

ITAAC For The Reactor Water Cleanup/Shutdown Cooling System

Design Commitment	Inspections, Tests, Analyses	Acceptance Criteria
10b. The as-built location of valves on lines attached to the RPV system of the RWCU/SDC system that require maintenance shall be reconciled to design requirements.	A reconciliation evaluation of valves on lines attached to the RPV requiring maintenance using as-designed and as-built information will be performed.	A design reconciliation has been completed for the as-built location of valves relative to the design requirements. The report documents the results of the reconciliation evaluation.

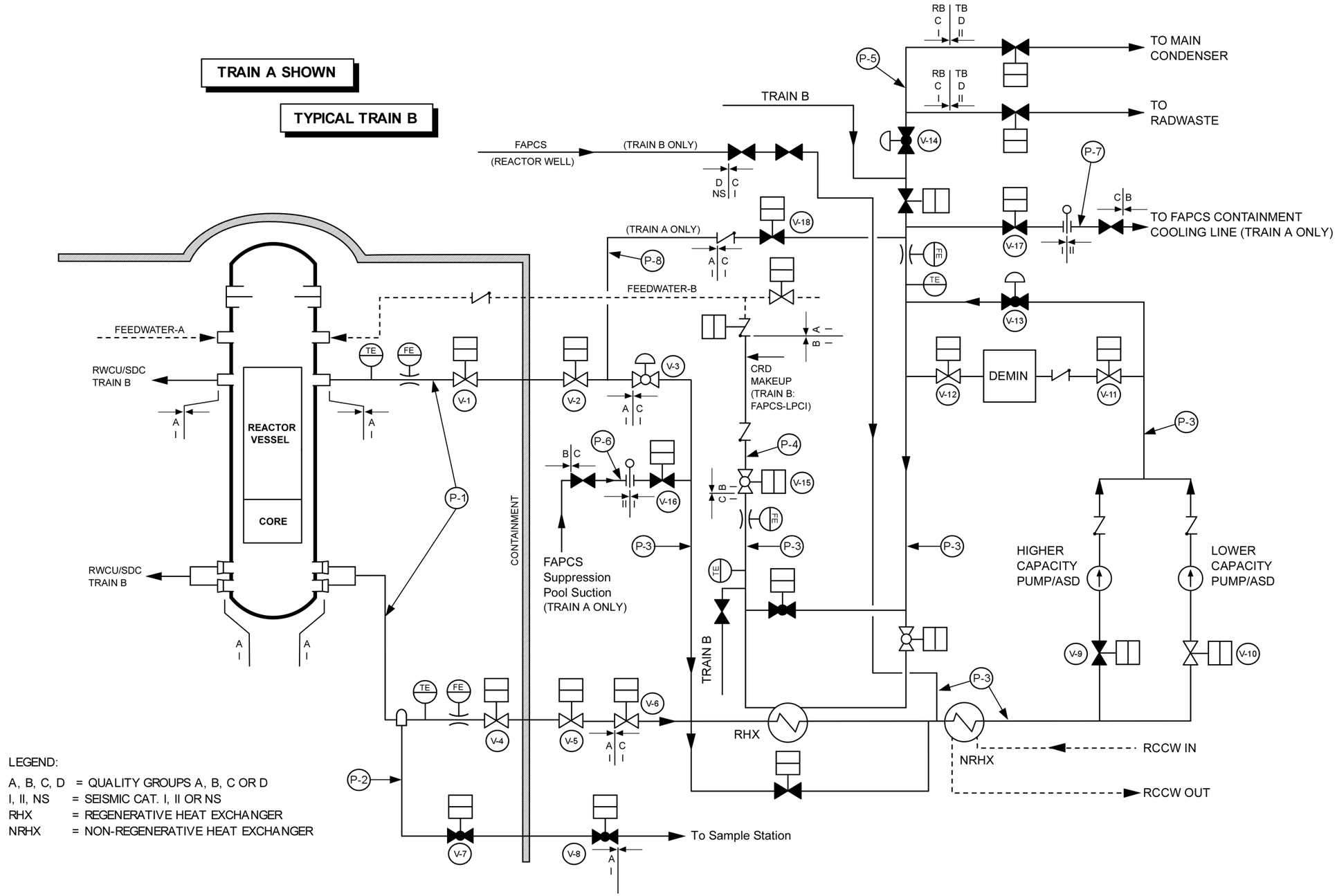

Figure 2.6.1-1. Reactor Water Cleanup/Shutdown Cooling System

2.6.2 Fuel And Auxiliary Pools Cooling System

Design Description

The Fuel and Auxiliary Pools Cooling System (FAPCS) provides cooling and cleaning of pools located in the containment, reactor building and fuel building during normal plant operation. The FAPCS provides flow paths for filling and makeup of these pools during normal plant operation and under post-accident conditions. The FAPCS provides suppression pool cooling and Low Pressure Coolant Injection (LPCI) as active backup of the passive containment heat removal systems.

The FAPCS is as shown in Figure 2.6.2-1.

The containment isolation portions of the FAPCS are addressed in Subsection 2.15.1.

The FAPCS alarms, displays, and status indications in the MCR are addressed by Section 3.3.

Environmental qualification for the FAPCS equipment is addressed in Section 3.8.

(1) The functional arrangement of the FAPCS is as described in the Design Description of this Subsection 2.6.2 and as shown in Figure 2.6.2-1.

(2) a1. The components identified in Table 2.6.2-1 as ASME Code Section III are designed in accordance with ASME Code Section III requirements.

a2. The components identified in Table 2.6.2-1 as ASME Code Section III shall be reconciled with the design requirements.

a3. The components identified in Table 2.6.2-1 as ASME Code Section III are fabricated, installed, and inspected in accordance with ASME Code Section III requirements.

b1. The piping identified in Table 2.6.2-1 as ASME Code Section III is designed in accordance with ASME Code Section III requirements.

b2. The as-built piping identified in Table 2.6.2-1 as ASME Code Section III shall be reconciled with the piping design requirements.

b3. The piping identified in Table 2.6.2-1 as ASME Code Section III is fabricated, installed, and inspected in accordance with ASME Code Section III requirements.

(3) a. Pressure boundary welds in components identified in Table 2.6.2-1 as ASME Code Section III meet ASME Code Section III non-destructive examination requirements.

b. Pressure boundary welds in piping identified in Table 2.6.1-1 as ASME Code Section III meet ASME Code Section III non-destructive examination requirements.

(4) a. The components identified in Table 2.6.2-1 as ASME Code Section III retain their pressure boundary integrity at their design pressure.

b. The piping identified in Table 2.6.2-1 as ASME Code Section III retains its pressure boundary integrity at its design pressure.

(5) The equipment identified in Table 2.6.2-1 as Seismic Category I can withstand Seismic Category I loads without loss of safety function.

(6) (Deleted)

(7) a. The FAPCS performs the nonsafety-related suppression pool cooling functions.

b. The FAPCS performs the nonsafety-related low-pressure coolant injection function.

c. The FAPCS provides the nonsafety-related external connection for emergency water to IC/PCCS pool and Spent Fuel Pool functions.

(8) (Deleted)

(9) Safety-related level instruments with adequate operating ranges are provided for the Spent Fuel Pool, buffer pool, and IC/PCCS pools.

(10) (Deleted)

(11) Following a loss of active cooling without makeup that persists for 72 hours, the water level in the Spent Fuel Pool remains above the top of active fuel.

(12) Following a loss of active cooling without makeup that persists for 72 hours, the water level in the Buffer Pool remains above the top of active fuel.

(13) a. Valves on lines attached to the RPV that require maintenance have maintenance valves such that freeze seals will not be required.

b. The as-built location of valves on lines attached to the RPV in the FAPCS that require maintenance shall be reconciled to design requirements

(14) Lines that are submerged in the spent fuel pool or buffer pool enter the pools above the normal water level and are equipped with redundant anti-siphon holes that will preserve a water inventory above TAF sufficient for safe shielding in the event of a break at a lower elevation.

(15) For all low-pressure coolant injection piping and components between the RWCU/SDC System and the FAPCS, including the check valves and motor operated valves, the ultimate rupture strength can withstand the full reactor pressure.

(16) The nonsafety-related control cables, instrument cables and power cables for equipment in the FAPCS trains A and B are electrically independent.

(17) The nonsafety-related control cables, instrument cables and power cables for equipment in the FAPCS trains A and B are physically separated.

(18) a. The electrical equipment supporting the two FAPCS trains is routed to the Reactor Building and Fuel Building through separate areas that do not contain installed equipment for lifting heavy loads.

b. Heavy loads that are being transported in the Reactor Building or the Fuel Building (where the majority of FAPCS equipment is located) that have the potential to simultaneously compromise both FAPCS trains would be handled by single failure-proof cranes.

Inspections, Tests, Analyses, and Acceptance Criteria

Table 2.6.2-2 provides a definition of the inspections, tests and analyses, together with associated acceptance criteria for the FAPCS.

Table 2.6.2-1

FAPCS Mechanical Equipment

Equipment Name (Description)	Equipment Identifier See Figure 2.6.2-1	ASME Code Section III	Seismic Cat. I	RCPB Component	Containment Isolation Valve	Remotely Operated	Loss of Motive Power Position
Suppression Pool Suction Outboard Isolation Valve	V-1	Yes	Yes	No	Yes	Yes	As-Is
Suppression Pool Suction Outboard Isolation Valve	V-2	Yes	Yes	No	Yes	Yes	As-Is
Suppression Pool Suction Outboard Isolation Valve	V-3	Yes	Yes	No	Yes	Yes	As-Is
Suppression Pool Suction Outboard Isolation Valve	V-4	Yes	Yes	No	Yes	Yes	As-Is
Suppression Pool Return Outboard Isolation Valve	V-5	Yes	Yes	No	Yes	Yes	As-Is
Suppression Pool Return Outboard Isolation Valve	V-6	Yes	Yes	No	Yes	Yes	As-Is
Suppression Pool Return Inboard Isolation Valve	V-7	Yes	Yes	No	Yes	–	–
Suppression Pool Return Inboard Isolation Valve	V-8	Yes	Yes	No	Yes	–	–
Drywell Spray Outboard Isolation Valve	V-9	Yes	Yes	No	Yes	Yes	Closed

Table 2.6.2-1

FAPCS Mechanical Equipment

Equipment Name (Description)	Equipment Identifier See Figure 2.6.2-1	ASME Code Section III	Seismic Cat. I	RCPB Component	Containment Isolation Valve	Remotely Operated	Loss of Motive Power Position
Drywell Spray Inboard Isolation Valve	V-10	Yes	Yes	No	Yes	–	–
GDCS Pool Return Outboard Isolation Valve	V-11	Yes	Yes	No	Yes	Yes	Closed
GDCS Pool Return Inboard Isolation Valve	V-12	Yes	Yes	No	Yes	–	–
GDCS Pool Suction Outboard Isolation Valve	V-13	Yes	Yes	No	Yes	Yes	Closed
GDCS Pool Suction Inboard Isolation Valve	V-14	Yes	Yes	No	Yes	Yes	Closed
Reactor Well Drain Inboard Isolation Valve	V-15	Yes	Yes	No	Yes	–	–
Reactor Well Drain Inboard Isolation Valve	V-16	Yes	Yes	No	Yes	–	–
FPS Water Makeup Valve to Spent Fuel Pool	V-17	Yes	Yes	No	No	–	–
FPS Water Makeup Check Valve to Spent Fuel Pool	V-18	Yes	Yes	No	No	–	–

Table 2.6.2-1

FAPCS Mechanical Equipment

Equipment Name (Description)	Equipment Identifier See Figure 2.6.2-1	ASME Code Section III	Seismic Cat. I	RCPB Component	Containment Isolation Valve	Remotely Operated	Loss of Motive Power Position
FPS Water Makeup Valve to Spent Fuel Pool	V-19	Yes	Yes	No	No	–	–
FPS Water Makeup Check Valve to Spent Fuel Pool	V-20	Yes	Yes	No	No	–	–
External Water Makeup Valve to Spent Fuel Pool	V-21	Yes	Yes	No	No	–	–
External Water Makeup Check Valve to Spent Fuel Pool	V-22	Yes	Yes	No	No	–	–
FPS Water Makeup Valve to IC/PCCS Pool	V-23	Yes	Yes	No	No	–	–
FPS Water Makeup Check Valve to IC/PCCS Pool	V-24	Yes	Yes	No	No	–	–
FPS Water Makeup Valve to IC/PCCS Pool	V-25	Yes	Yes	No	No	–	–
FPS Water Makeup Check Valve to IC/PCCS Pool	V-26	Yes	Yes	No	No	–	–
External Water Makeup Valve to IC/PCCS Pool	V-27	Yes	Yes	No	No	–	–

Table 2.6.2-1

FAPCS Mechanical Equipment

Equipment Name (Description)	Equipment Identifier See Figure 2.6.2-1	ASME Code Section III	Seismic Cat. I	RCPB Component	Containment Isolation Valve	Remotely Operated	Loss of Motive Power Position
External Water Makeup Check Valve to IC/PCCS Pool	V-28	Yes	Yes	No	No	–	–
LPCI Testable Check Valve	V-29	Yes	Yes	No	No	–	–
LPCI Testable Check Valve	V-30	Yes	Yes	No	No	–	–
Piping required for emergency refill of SFP and IC/PCCS Pool	–	Yes	Yes	No	–	–	–
Piping associated with containment penetrations	–	Yes	Yes	No	–	–	–
Piping to interconnect GDCS pools	–	Yes	Yes	No	–	–	–
Piping associated with low pressure injection interface with RWCU/SDC System	–	Yes	Yes	No	–	–	–
FAPCS Pump	P-1	Yes	No	No	–	Yes	Off
FAPCS Pump	P-2	Yes	No	No	–	Yes	Off

Table 2.6.2-1

FAPCS Mechanical Equipment

Equipment Name (Description)	Equipment Identifier See Figure 2.6.2-1	ASME Code Section III	Seismic Cat. I	RCPB Component	Containment Isolation Valve	Remotely Operated	Loss of Motive Power Position
FAPCS Heat Exchanger	HX-1	Yes	No	No	–	–	–
FAPCS Heat Exchanger	HX-2	Yes	No	No	–	–	–
FAPCS Suppression Pool Suction Strainer	S-1	Yes*	Yes	No	–	–	–

* ASME Section III materials only.

Table 2.6.2-2

ITAAC For The Fuel and Auxiliary Pools Cooling System

Design Commitment	Inspections, Tests, Analyses	Acceptance Criteria
1. The functional arrangement of the FAPCS is as described in the Design Description of Subsection 2.6.2 and as shown in Figure 2.6.2-1.	Inspections of the as-built system will be conducted.	The as-built FAPCS conforms to the functional arrangement described in Subsection 2.6.2 and as shown on Figure 2.6.2-1.
2a1. The components identified in Table 2.6.2-1 as ASME Code Section III are designed in accordance with ASME Code Section III requirements.	Inspection of ASME Code Design Reports (NCA-3550) and required documents will be conducted.	ASME Code Design Reports (NCA-3550) (certified, when required by ASME Code) exist and conclude that the design of the components identified in Table 2.6.2-1 as ASME Code Section III complies with the requirements of ASME Code Section III including those stresses applicable to loads related to fatigue (including environmental effects), thermal expansion, seismic, and combined.
2a2. The components identified in Table 2.6.2-1 as ASME Code Section III shall be reconciled with the design requirements.	A reconciliation analysis of the components identified in Table 2.6.2-1 as ASME Code Section III using as-designed and as-built information and ASME Code Design Reports (NCA-3550) will be performed.	ASME Code Design Report(s) (NCA-3550) (certified, when required by ASME Code) exist and conclude that design reconciliation has been completed, in accordance with ASME Code, for as-built reconciliation of the components identified in Table 2.6.2-1 as ASME Code Section III. The report documents the results of the reconciliation analysis.

Table 2.6.2-2

ITAAC For The Fuel and Auxiliary Pools Cooling System

Design Commitment	Inspections, Tests, Analyses	Acceptance Criteria
2a3. The components identified in Table 2.6.2-1 as ASME Code Section III are fabricated, installed, and inspected in accordance with ASME Code Section III requirements.	Inspection of the components identified in Table 2.6.2-1 as ASME Code Section III will be conducted.	ASME Code Data Report(s) (including N-5 Data Reports, where applicable) (certified, when required by ASME Code) and inspection reports exist and conclude that the components identified in Table 2.6.2-1 as ASME Code Section III are fabricated, installed, and inspected in accordance with ASME Code Section III requirements.
2b1. The piping identified in Table 2.6.2-1 as ASME Code Section III is designed in accordance with ASME Code Section III requirements.	Inspection of ASME Code Design Reports (NCA-3550) and required documents will be conducted. {{Design Acceptance Criteria}}	ASME Code Design Report(s) (NCA-3550) (certified, when required by ASME Code) exist and conclude that the design of the piping identified in Table 2.6.2-1 as ASME Code Section III complies with the requirements of the ASME Code, Section III, including those stresses applicable to loads related to fatigue (including environmental effects), thermal expansion, seismic, and combined. {{Design Acceptance Criteria}}
2b2. The as-built piping identified in Table 2.6.2-1 as ASME Code Section III shall be reconciled with the piping design requirements.	A reconciliation analysis of the piping identified in Table 2.6.2-1 as ASME Code Section III using as-designed and as-built information and ASME Code Design Reports (NCA-3550) will be performed.	ASME Code Design Report(s) (NCA-3550) (certified, when required by ASME Code) exist and conclude that design reconciliation has been completed, in accordance with ASME Code, for as-built reconciliation of the piping identified in Table 2.6.2-1 as ASME Code Section III. The report documents the results of the reconciliation analysis.

Table 2.6.2-2

ITAAC For The Fuel and Auxiliary Pools Cooling System

Design Commitment	Inspections, Tests, Analyses	Acceptance Criteria
2b3. The piping identified in Table 2.6.2-1 as ASME Code Section III is fabricated, installed, and inspected in accordance with ASME Code Section III requirements.	Inspections of the piping identified in Table 2.6.2-1 as ASME Code Section III will be conducted.	ASME Code Design Report(s) (NCA-3550) (certified, when required by ASME Code) exist and conclude that design reconciliation has been completed, in accordance with ASME Code, for as-built reconciliation of the piping identified in Table 2.6.2-1 as ASME Code Section III. The report documents the results of the reconciliation analysis.
3a. Pressure boundary welds in components identified in Table 2.6.2-1 as ASME Code Section III meet ASME Code Section III non-destructive requirements.	Inspection of the as-built pressure boundary welds in components identified in Table 2.6.2-1 as ASME Code Section III will be performed in accordance with ASME Code Section III.	ASME Code report(s) exist and conclude that ASME Code Section III requirements are met for non-destructive examination of pressure boundary welds in components identified in Table 2.6.2-1 as ASME Code Section III.
3b. Pressure boundary welds in piping identified in Table 2.6.2-1 as ASME Code Section III meet ASME Code Section III non-destructive requirements.	Inspection of the as-built pressure boundary welds in piping identified in Table 2.6.2-1 as ASME Code Section III will be performed in accordance with ASME Code Section III.	ASME Code report(s) exist and conclude that ASME Code Section III requirements are met for non-destructive examination of pressure boundary welds in piping identified in Table 2.6.2-1 as ASME Code Section III.
4a. Pressure boundary welds in piping identified in Table 2.6.2-1 as ASME Code Section III meet ASME Code Section III requirements.	A hydrostatic test will be conducted on those code components identified in Table 2.6.2-1 as ASME Code Section III that are required to be hydrostatically tested by ASME Code Section III.	ASME Code Data Report(s) exist and conclude that the results of the hydrostatic test of components identified in Table 2.6.2-1 as ASME Code Section III comply with the requirements of ASME Code Section III.

Table 2.6.2-2

ITAAC For The Fuel and Auxiliary Pools Cooling System

Design Commitment	Inspections, Tests, Analyses	Acceptance Criteria
4b. The piping identified in Table 2.6.2-1 as ASME Code Section III retains its pressure boundary integrity at its design pressure.	A hydrostatic test will be conducted on the code piping identified in Table 2.6.2-1 as ASME Code Section III that is required to be hydrostatically tested by ASME Code Section III.	ASME Code Data Report(s) exist and conclude that the results of the hydrostatic test of piping identified in Table 2.6.2-1 as ASME Code Section III comply with the requirements in ASME Code Section III.
5. The equipment identified in Table 2.6.2-1 as Seismic Category I can withstand Seismic Category I loads without loss of safety function.	i. Inspection will be performed to verify that the Seismic Category I equipment identified in Table 2.6.2-1 are located in a Seismic Category I structure.	i. The equipment identified as Seismic Category I in Table 2.6.2-1 is located in a Seismic Category I structure.
	ii. Type tests, analyses, or a combination of type tests and analyses, of equipment identified in Table 2.6.2-1 as Seismic Category I, will be performed using analytical assumptions, or will be performed under conditions which bound the Seismic Category I equipment design requirements.	ii. The equipment identified in Table 2.6.2-1 as Seismic Category I can withstand Seismic Category I loads without loss of safety function.
	iii. Inspections and analyses will be performed to verify that the as-built equipment identified in Table 2.6.2-1, including anchorage, is bounded by the testing or analyzed conditions.	iii. The as-built equipment identified in Table 2.6.2-1 including anchorage, can withstand Seismic Category I loads without loss of safety function.

Table 2.6.2-2

ITAAC For The Fuel and Auxiliary Pools Cooling System

Design Commitment	Inspections, Tests, Analyses	Acceptance Criteria
6. (Deleted)		
7a. The FAPCS performs the nonsafety-related suppression pool cooling functions.	i. Perform a test to confirm the flow path and minimum flow rate between the FAPCS and the suppression pools. ii. Perform a type test to confirm the heat transfer capacity of the FAPCS heat exchanger. iii. Inspection of as-built FAPCS suppression pool suction intake will be performed to confirm the presence of a suction strainer with perforated plate hole sizes of ≤ 2.508 mm (0.0988 inches).	i. The cooling flow path is demonstrated and confirmed by operation of the function. The flow rate is ≥ 567.8 m^3/hr (2500 gal/min). ii. The design heat removal capacity of a single FAPCS train is ≥ 8.3 MW under the following conditions: • Primary and secondary side flow rate ≤ 567.8 m^3/hr (2500 gpm) • Process inlet temperature ≤ 48.9ºC (120ºF) • Cooling water inlet temperature of ≥ 35ºC (95ºF) iii. A suction strainer with perforated plate hole sizes of ≤ 2.508 mm (0.0988 inches) is present on FAPCS suppression pool suction intake.
7b. The FAPCS performs the nonsafety-related low-pressure coolant injection functions.	Perform a test to confirm the flow path and minimum flow rate from the FAPCS to the RWCU/SDC system.	The injection flow path is demonstrated and confirmed by operation of the function. The flow rate is ≥ 340 m3/hr (1500 gal/min) at a differential pressure > 1.03 MPa (150 psi) and < 1.05 MPa (152 psi).

Table 2.6.2-2

ITAAC For The Fuel and Auxiliary Pools Cooling System

Design Commitment	Inspections, Tests, Analyses	Acceptance Criteria
7c. The FAPCS provides the nonsafety-related external connection for emergency water to IC/PCCS pool and Spent Fuel Pool functions.	Perform a test to confirm flow path from the Fire Protection System and offsite water sources to the pools.	The makeup water flow path is demonstrated and confirmed by operation of the function.
8. (Deleted)		
9. Safety-related level instruments with adequate operating ranges are provided for the Spent Fuel Pool, buffer pool, and IC/PCCS pools.	Inspections and tests of the FAPCS will be conducted to verify that level instruments with adequate operating ranges are provided for the Spent Fuel Pool and IC/PCCS pools.	The as-built FAPCS provides Spent Fuel Pool, buffer pool, and IC/PCCS pool level instrumentation with adequate operating ranges. • Instruments for the SFP and buffer pool accurately indicate pool level over the range from normal water level to the top of the active fuel within ± 300 mm (1 ft). • Instruments for the IC/PCCS pools accurately indicated pool level over the range normal water level to the midpoint of the IC heat exchanger tube within ± 300 mm (1 ft).
10. (Deleted)		

Table 2.6.2-2

ITAAC For The Fuel and Auxiliary Pools Cooling System

Design Commitment	Inspections, Tests, Analyses	Acceptance Criteria
11. Following a loss of active cooling without makeup that persists for 72 hours, the water level in the Spent Fuel Pool remains above the top of active fuel.	Inspection of the Spent Fuel Pool as-built dimensions will be performed to determine the elevation of the pool weir relative to the bottom of the pool and the free volume between the top of the active fuel and the weir elevation.	The elevation of the Spent Fuel Pool weir relative to the bottom of the pool is at least 14.35 m (47 ft) and that there is at least 1690 m^3 (59681 ft^3) of free volume above the top of the active fuel that can be filled with water.
12. Following a loss of active cooling without makeup that persists for 72 hours, the water level in the Buffer Pool remains above the top of active fuel.	Inspection of the Buffer Pool as-built dimensions will be performed to determine the elevation of the pool weir relative to the bottom of the pool and the free volume between the top of the active fuel and the weir elevation.	The elevation of the Buffer Pool weir relative to the bottom of the pool is at least 6.7 m (22 ft) and that there is at least 288 m^3 (10,100 ft^3) of free volume above the top of the active fuel that can be filled with water.
13a. Valves on lines attached to the RPV that require maintenance have maintenance valves such that freeze seals will not be required.	Inspections of piping design isometric drawings will be conducted. {{Design Acceptance Criteria}}	A review of piping design isometric drawings confirms that maintenance valves are included such that freeze seals will not be required. {{Design Acceptance Criteria}}
13b. The as-built location of valves on lines attached to the RPV in the FAPCS that require maintenance shall be reconciled to design requirements.	A reconciliation evaluation of valves on lines attached to the RPV that require maintenance using as-designed and as-built information will be performed	A design reconciliation has been completed for the as-built location of valves relative to the design requirements. The report documents the results of the reconciliation evaluation.

Table 2.6.2-2

ITAAC For The Fuel and Auxiliary Pools Cooling System

Design Commitment	Inspections, Tests, Analyses	Acceptance Criteria
14. Lines that are submerged in the spent fuel pool or buffer pool enter the pools above the normal water level are equipped with redundant anti-siphon holes that will preserve a water inventory above TAF sufficient for safe shielding in the event of a break at a lower elevation.	Inspection of as-built submerged piping in the Spent Fuel Pool and Buffer Pool will be performed.	Redundant anti-siphon holes are present on all submerged piping in the Spent Fuel Pool and Buffer Pool and the piping enters the pools above the normal water level to preserve the water inventory to a minimum of 3.05 m (10.0 ft) above TAF in the event of a break at a lower elevation.
15. For all low-pressure coolant injection piping and components between the RWCU/SDC System and the FAPCS, including the check valves and motor operated valves, the ultimate rupture strength can withstand the full reactor pressure.	Inspection and analysis to verify the ultimate rupture strength of the as-built low-pressure coolant injection piping between the RWCU/SDC System and the nonsafety-related motor operated valves will be performed.	For the as-built low-pressure coolant injection piping and components between the RWCU/SDC System and the FAPCS, including the check valves and motor operated valves, the ultimate rupture strength can withstand the full reactor pressure.
16. The nonsafety-related control cables, instrument cables and power cables for equipment in the FAPCS trains A and B are electrically independent.	Tests of the nonsafety-related control cables, instrument cables and power cables for equipment in the FAPCS trains A and B will be performed to show electrical independence.	The nonsafety-related control cables, instrument cables and power cables for equipment in the FAPCS trains A and B are electrically independent.
17. The nonsafety-related control cables, instrument cables and power cables for equipment in the FAPCS trains A and B are physically separated	Inspections of the nonsafety-related control cables, instrument cables and power cables for equipment in the FAPCS trains A and B will be performed to show physical separation.	The nonsafety-related control cables, instrument cables and power cables for equipment in the FAPCS trains A and B are physically separated as defined by IEEE-384.

Table 2.6.2-2

ITAAC For The Fuel and Auxiliary Pools Cooling System

Design Commitment	Inspections, Tests, Analyses	Acceptance Criteria
18a. The electrical equipment supporting the two FAPCS trains is routed to the Reactor Building and Fuel Building through separate areas that do not contain installed equipment for lifting heavy loads.	Inspection of the electrical equipment supporting FAPCS will be conducted.	The electrical equipment supporting the two FAPCS trains is routed to the Reactor Building and Fuel Building through separate areas that do not contain installed equipment for lifting heavy loads.
18b. Heavy loads that are being transported in the Reactor Building or the Fuel Building (where the majority of FAPCS equipment is located) that have the potential to simultaneously compromise both FAPCS trains will be handled by single failure-proof cranes.	Inspection of the Reactor Building and Fuel Building cranes will be conducted.	The Reactor Building and the Fuel Building cranes are single failure-proof cranes (see Table 2.16.1-1, ITAAC 10 and ITAAC 11).

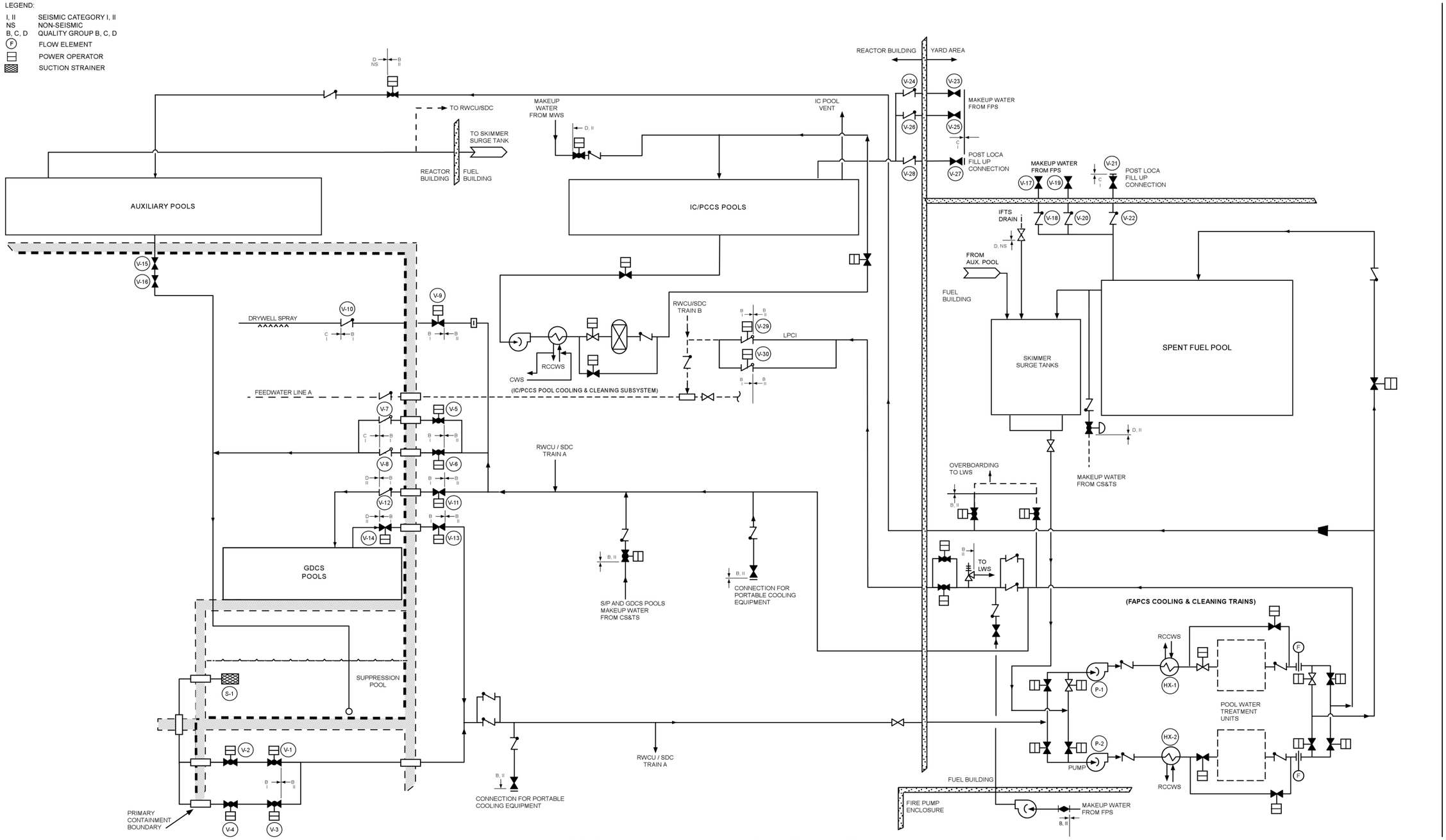

Figure 2.6.2-1. Fuel and Auxiliary Pools Cooling System

2.7 (DELETED)

2.7.1 (Deleted)

2.7.2 (Deleted)

2.7.3 (Deleted)

2.8 (DELETED)

2.8.1 (Deleted)

2.8.2 (Deleted)

2.9 (DELETED)

2.10 RADIOACTIVE WASTE MANAGEMENT SYSTEM

2.10.1 Liquid Waste Management System

Design Description

The ESBWR Liquid Waste Management System (LWMS) is designed to control, collect, process, handle, store, monitor and dispose of liquid radioactive waste generated as the result of normal operation, including anticipated operational occurrences. The LWMS is designed to process liquid prior to release and ensure compliance with 10 CFR Part 20, Part B effluent concentration and dose limits, and Part 50, Appendix I dose objectives for liquid effluents when the plant is operational.

The LWMS does not perform any safety-related function, and is not required to achieve or maintain safe shutdown.

The functional arrangement of the LWMS is that it has components in four subsystems that receive and store radioactive or potentially radioactive liquid waste. The four LWMS subsystems are as follows:

- Equipment (low conductivity) drain subsystem;
- Floor (high conductivity) drain subsystem;
- Chemical drain subsystem; and
- Detergent drain subsystem.

Table 2.10.1-1 describes the major components in each of these four subsystems. Other components include piping, pumps, and valves for transferring the process flow. The LWMS processing equipment is located in the Radwaste Building. The LWMS is operated and monitored from the Radwaste Building Control Room. Main control room alarms are provided for key parameters of the LWMS. The LWMS either returns processed water to the condensate system or discharges to the environment via the circulating water system.

(1) The LWMS functional arrangement is as described in Subsection 2.10.1 and Table 2.10.1-1.

(2) The LWMS piping systems retain their pressure boundary integrity under internal pressures that will be experienced during service.

(3) LWMS discharge flow is monitored for high radiation. A radiation monitor provides an automatic closure signal to the discharge line isolation valve. Discharge flow is terminated on receipt of a high radiation signal from this monitor.

(4) LWMS demineralizers have the filter efficiency and sufficient demineralizer media as specified in design specifications.

Inspections, Tests, Analyses, and Acceptance Criteria

Table 2.10.1-2 provides a definition of the inspections, tests, and analyses, together with associated acceptance criteria for the Liquid Waste Management System. ITAAC, for the liquid radwaste discharge radiation monitor, and for part of the process radiation monitoring system, are also located in Table 2.3.1-2.

Table 2.10.1-1

Major Equipment in LWMS

Equipment	Number of Equipment Items
Equipment (Low Conductivity) Drain Subsystem	
Collection tanks	3
Collection tank cubicle steel liner	3 (one per cubicle)
Collection pumps	3
Process Subsystem: • Filtration system • Reverse osmosis • Mixed-bed ion exchanger • Piping • Instrumentation • Electrical System	1
Sample tanks	2
Sample tank cubicle steel liner	1 (one per cubicle)
Sample pumps	2
Floor (High Conductivity) Drain Subsystem	
Collection tanks	2
Collection tank cubicle steel liner	2 (one per cubicle)
Collection pumps	2
Process Subsystem • Filtration system • Reverse osmosis • Mixed-bed ion exchanger • Piping • Instrumentation • Electrical System	1
Sample tanks	2
Sample tank cubicle steel liner	1 (one per cubicle)
Sample pumps	2
Chemical Drain Subsystem	
Collection tank	1
Collection tank cubicle steel liner	1
Collection pump	2
Detergent Drain Subsystem	
Collection tanks	2
Collection tank cubicle steel liner	1 (one per cubicle)
Collection pumps	2

Table 2.10.1-1

Major Equipment in LWMS

Equipment	Number of Equipment Items
Process Subsystem: • Filtration system • Organic pre-treatment equipment • Piping • Instrumentation • Electric system	1
Sample tanks	2
Sample tank cubicle steel liner	1 (one per cubicle)
Sample pumps	2

Table 2.10.1-2

ITAAC For The Liquid Waste Management System

Design Commitment	Inspections, Tests, Analyses	Acceptance Criteria
1. The LWMS functional arrangement is as described in Subsection 2.10.1 and Table 2.10.1-1.	Inspections of the as-built system will be performed.	The as-built LWMS conforms to the functional arrangement as described in the Design Description of this Subsection 2.10.1 and Table 2.10.1-1.
2. The LWMS piping systems retain their pressure boundary integrity under internal pressures that will be experienced during service.	A hydrostatic test in accordance with ASME/ANSI B31.3 will be conducted on the LWMS piping systems, except (1) at atmospheric tanks where no isolation valves exist, (2) when such testing would damage equipment, and (3) when such testing could seriously interfere with other systems or components required to be hydrostatically tested by the API or ASME Code per Regulatory guide 1.143, Revision 2.	The results of the hydrostatic test of the LWMS piping systems in accordance with ASME/ANSI B31.3 comply with the requirements in the ASME Code per Regulatory Guide 1.143, Revision 2 and indicate no unacceptable pressure boundary leakage.
3. LWMS discharge flow is monitored for high radiation. A radiation monitor provides an automatic closure signal to the discharge line isolation valve. Discharge flow is terminated on receipt of a high radiation signal from this monitor.	Tests will be conducted using a standard radiation source or portable calibration unit that exceeds a setpoint value that is preset for the testing. Inspections will be conducted to confirm that the as-built indication, alarm, and automatic initiation functions are met.	The LWMS discharge flow terminates upon receipt of a simulated high radiation signal and associated indication and alarm functions are met.
4. LWMS demineralizers have the filter efficiency and sufficient demineralizer media as specified in design specifications.	Inspections will be conducted to verify the amount of filtration and demineralization media is loaded in demineralizer vessels.	The vendor specified filter efficiency and amount of demineralization media is loaded in the demineralizer vessels.

2.10.2 Solid Waste Management System

Design Description

The Solid Waste Management System (SWMS) has no safety-related functions. It is designed to control, collect, handle, process, package, and temporarily store wet and dry solid radioactive waste prior to shipment. This waste is generated as a result of normal operation and anticipated operational occurrences.

The functional arrangement of the SWMS is that the SWMS is located in the Radwaste Building. It consists of the following four subsystems:

- SWMS collection subsystem,
- SWMS processing subsystem,
- Dry solid waste accumulation and conditioning subsystem, and
- Container storage subsystem.

The SWMS also contains the tanks listed in Table 2.10.2-1.

(1) The SWMS functional arrangement is as described in the Design Description of this Subsection 2.10.2.

(2) The SWMS provides the nonsafety-related function of storing radioactive solids prior to processing for shipment.

Inspection, Tests, Analyses and Acceptance Criteria

Table 2.10.2-2 provides a definition of the inspections, tests, and analyses, together with associated acceptance criteria for the Solid Waste Management System.

Table 2.10.2-1

SWMS Tanks Nominal Capacity (Volume)

Equipment Description	Quantity	Nominal Capacity (Volume) Liter (Gal)
High Activity Resin Holdup Tank	1	70,000 (18,494)
Low Activity Resin Holdup Tank	1	70,000 (18,494)
Condensate Resin Holdup Tank	1	70,000 (18,494)
Low Activity Phase Separator Tank	1	55,000 (14,531)
High Activity Phase Separator Tank	1	12,000 (3,170)
Concentrated Waste Tank	1	60,000 (15,852)

Table 2.10.2-2

ITAAC For Solid Waste Management System

Design Commitment	Inspections, Tests, Analyses	Acceptance Criteria
1. The SWMS functional arrangement is as described in the Design Description of this Subsection 2.10.2.	Inspection of the as-built system will be performed.	The as-built SWMS conforms to the functional arrangement as described in the Design Description of this Subsection 2.10.2.
2. The SWMS provides the nonsafety-related function of storing radioactive solids prior to processing for shipment.	Inspection will be performed to verify the nominal volumes of each of the SWMS tanks.	The nominal volume of each of the SWMS tanks is the nominal value indicated on Table 2.10.2-1.

2.10.3 Gaseous Waste Management System

Design Description

The gaseous waste management system processes and controls the release of gaseous radioactive effluents to the environs. The Offgas System (OGS) is designed to process gaseous wastes and ensuring compliance with 10 CFR Part 20, Part B effluent concentration and dose limits, and Part 50, Appendix I dose objectives for gaseous effluents when the plant is operational. The OGS is the principal gaseous waste management subsystem. The various building HVAC systems perform other gaseous waste functions.

The functional arrangement of the OGS is that the process equipment is housed in a reinforced-concrete structure to provide adequate shielding. Charcoal absorbers are installed in a temperature monitored and controlled vault. The facility is located in the Turbine Building. The OGS provides for holdup, and thereby, decay of radioactive gases in the offgas from the main condenser air removal system and consists of process equipment along with monitoring instrumentation and control components. The OGS includes redundant hydrogen/oxygen catalytic recombiners and ambient temperature charcoal beds to provide for process gas volume reduction and radionuclide retention/decay. The OGS processes the main condenser air removal system discharge during plant startup and normal operation before discharging the air flow to the turbine building stack.

Control and monitoring of the OGS process equipment is performed both locally and remotely from the main control room.

(1) The OGS functional arrangement is as described in Subsection 2.10.3.

(2) The OGS is designed to withstand internal hydrogen explosions.

(3) Leakage from the process through purge or tap lines to external atmospheric pressure is sufficiently low so it is undetectable by “soap bubble” test.

(4) The OGS automatically controls the OGS flow bypassing or through the charcoal adsorber beds depending on the radioactivity levels in the OGS process gas downstream of the charcoal beds. Normal operation of the OGS shall take place in the treat mode. The treat mode provides for an alignment to send process flow through one guard bed and all the remaining charcoal adsorbers.

(5) The OGS minimizes and controls the release of radioactive material into the atmosphere by delaying release of the offgas process stream initially containing radioactive isotopes of krypton, xenon, iodine, nitrogen, and oxygen. This delay, using activated charcoal adsorber beds, is sufficient to achieve adequate decay before the process offgas stream is discharged from the plant.

Inspections, Tests, Analyses, and Acceptance Criteria

Table 2.10.3-1 provides a definition of the inspections, tests, and analyses, together with associated acceptance criteria for the Gaseous Waste Management System. ITAAC for the off-gas post-treatment radiation monitor, and for part of the process radiation monitoring system, are also located in Table 2.3.1-2.

Table 2.10.3-1

ITAAC For The Gaseous Waste Management System

Design Commitment	Inspections, Tests, Analyses	Acceptance Criteria
1. The OGS functional arrangement is as described in Subsection 2.10.3.	Inspections of the as-built OGS will be performed.	The as-built OGS conforms to the functional arrangement as described the Design Description of this Section 2.10.3.
2. The OGS is designed to withstand internal hydrogen explosions.	A pressure test of the as-built OGS will be conducted in the plant in accordance ASME/ANSI B31.3 requirements.	The OGS pressure testing results conform to the requirements in ASME/ANSI B31.3.
3. Leakage from the process through purge or tap lines to external atmospheric pressure is sufficiently low so it is undetectable by "soap bubble" test.	"Soap bubble" tests will be performed on the OGS mechanical joints on purge or tap lines at normal system operating pressure.	The OGS "soap bubble" test results show no detectable leakage.
4. The OGS automatically controls the OGS flow bypassing or through the charcoal adsorber beds depending on the radioactivity levels in the OGS process gas downstream of the charcoal beds. Normal operation of the OGS shall take place in the treat mode. The treat mode provides for an alignment to send process flow through one guard bed and all the remaining charcoal adsorbers.	i. A standard radiation source or portable calibration unit that exceeds a setpoint value that is preset for the testing will provide a simulated high charcoal gas discharge radioactivity signal that will give a MCR alarm.	i. The Main Control Room alarm activates on a high OGS discharge radiation signal.

Table 2.10.3-1

ITAAC For The Gaseous Waste Management System

Design Commitment	Inspections, Tests, Analyses	Acceptance Criteria
	ii. A standard radiation source or portable calibration unit that exceeds a setpoint value that is preset for the testing will provide a simulated high-high charcoal gas discharge radioactivity signal when the OGS process gas flow is bypassing the main charcoal beds and will give a MCR alarm and direct the gas flow through the charcoal beds.	ii. The OGS charcoal bed valves operate to automatically align to process offgas flow through both the guard beds and all of the charcoal beds.
	iii. A standard radiation source or portable calibration unit that exceeds a setpoint value that is preset for the testing will provide a simulated OGS gas discharge radioactivity signal that closes the off-gas system discharge valve when the signal reaches a high-high-high level.	iii. The OGS discharge valve closes on a high-high-high OGS discharge radioactivity signal.

Table 2.10.3-1

ITAAC For The Gaseous Waste Management System

Design Commitment	Inspections, Tests, Analyses	Acceptance Criteria
5. The OGS minimizes and controls the release of radioactive material into the atmosphere by delaying release of the offgas process stream initially containing radioactive isotopes of krypton, xenon, iodine, nitrogen, and oxygen. This delay, using activated charcoal adsorber beds, is sufficient to achieve adequate decay before the process offgas stream is discharged from the plant.	Inspections will be performed to verify the mass of charcoal loaded in the Charcoal Guard Bed and Charcoal Decay Bed.	The Charcoal Guard Bed has a minimum of 15,000 kg (33,000 lb) of charcoal. The Charcoal Decay Bed has a minimum of 223,000 kg (490,000 lb) of charcoal.

2.11 POWER CYCLE

The following subsections describe the major power cycle (i.e., generation) systems for the ESBWR.

2.11.1 Turbine Main Steam System

Design Description

The Turbine Main Steam System (TMSS) supplies steam generated in the reactor to the Turbine Generator, moisture separator reheaters, steam auxiliaries and turbine bypass system. The TMSS does not include the seismic interface restraint, main turbine stop valves or bypass valves.

The TMSS consists of four lines from the seismic interface restraint to the main turbine stop valves. The TMSS is nonsafety-related. Regulatory Guide 1.26 Quality Group B portions of the TMSS are designed in accordance with ASME Boiler and Pressure Vessel Code, Section III, Class 2 requirements. The TMSS is located in the Reactor Building steam tunnel and Turbine Building.

The Regulatory Guide 1.26 Quality Group B portions of the TMSS are those portions of the Main Steam Lines that extend from the seismic interface restraint (or seismic guide) to the turbine stop valves (non-inclusive), turbine bypass valves (non-inclusive) and the connecting branch lines (nominal 6.35 cm. (2.5 in) and larger) up to and including the first isolation valve which is either normally closed or capable of automatic closure during all modes of normal reactor operation. This defines the portions of the TMSS subject to ASME Code Section III Class 2 requirements. Figures 2.11.1-1 through 2.11.1-3 show the functional arrangement and class changes to identify the scope equipment within the TMSS.

(1) The TMSS functional arrangement is as described in Subsection 2.11.1 and as shown on Figures 2.11.1-1 through 2.11.1-3.

(2) a1. The ASME Code Section III components of the TMSS are designed in accordance with ASME Code Section III requirements.

a2. The ASME Code Section III components of the TMSS shall be reconciled with the design requirements.

a3. The ASME Code Section III components of the TMSS are fabricated, installed, and inspected in accordance with ASME Code Section III requirements.

b1. The ASME Code Section III components of the TMSS retain their pressure boundary integrity at their design pressure.

b2. The ASME Code Section III piping of the TMSS retains its pressure boundary integrity at its design pressure.

(3) Upon receipt of an MSIV closure signal, the Steam Auxiliary Isolation Valve(s) close(s) and required MSIV fission product leakage path TMSS drain valve(s) open(s).

(4) The Steam Auxiliary Isolation Valve(s) fail(s) closed and required MSIV fission product leakage path TMSS drain valve(s) fail(s) open on loss of electrical power to the valve actuating solenoid or on loss of pneumatic pressure.

(5) TMSS piping, which consists of the piping (including supports) for the MSL from the seismic interface restraint (or seismic guide) to the turbine stop valves (non-inclusive), turbine bypass valves (non-inclusive) and the connecting branch lines (nominal 6.35 cm. (2.5 in.) and larger up to and including the first isolation valve which is either normally closed or capable of automatic closure during all modes of normal reactor operation, is classified as Seismic Category II.

(6) The integrity of the as-built MSIV leakage path to the condenser (main steam piping, bypass piping, required drain piping, and main condenser as shown on Figure 2.11.1-1) is not compromised by non-seismic systems, structures and components.

(7) The non-seismic portion of the MSIV leakage path to the condenser (main steam piping from the stop valve (inclusive) to turbine nozzle, bypass piping, required drain piping, and main condenser) maintains structural integrity under SSE loading conditions.

(8) The TMSS piping is sized to ensure that reactor pressure vessel (RPV) dome to turbine stop valve pressure drop, total main steam system volume, and steamline length are consistent with assumptions in AOO analyses.

(9) a. The TMSS piping portion designated as ASME Code Section III is designed in accordance with ASME Code Section III requirements and Seismic Category II requirements.

b. The as-built TMSS piping portion designated as ASME Code Section III shall be reconciled with the piping design requirements.

c. The TMSS piping portion designated as ASME Code Section III is fabricated, installed, and inspected in accordance with ASME Code Section III requirements..

(10) a. Pressure boundary welds in the ASME Code Section III components of TMSS meet ASME Code Section III non-destructive examination requirements.

b. Pressure boundary welds in the ASME Code Section III piping of the TMSS meet the ASME Code Section III non-destructive examination requirements.

(11) a. Valves on lines attached to the RPV that require maintenance have maintenance valves installed such that freeze seals will not be required.

b. The as-built location of valves on lines attached to the RPV in the TMSS that require maintenance shall be reconciled to design requirements.

(12) The non-return valves shown on functional arrangement Figure 2.11.1-2 and 2.11.1-3 are spring assisted to close.

Inspections, Tests, Analyses, and Acceptance Criteria

Table 2.11.1-1 provides a definition of the inspections, tests, and analyses, together with associated acceptance criteria for the TMSS.

Table 2.11.1-1

ITAAC For The Turbine Main Steam System

Design Commitment	Inspections, Tests, Analyses	Acceptance Criteria
1. The TMSS functional arrangement is as described in Subsection 2.11.1 and as shown on Figures 2.11.1-1 through 2.11.1-3.	Inspections of the as-built system will be conducted.	The as-built TMSS conforms to the functional arrangement description in Subsection 2.11.1 and as shown on Figures 2.11.1-1 through 2.11.1-3.
2a1. The ASME Code Section III components of the TMSS are designed in accordance with ASME Code Section III requirements.	Inspection of ASME Code Design Reports (NCA-3550) and required documents will be conducted.	ASME Code Design Report(s) (NCA-3550) (certified, when required by ASME Code) exist and conclude that the design of the ASME code components of the TMSS complies with the requirements of the ASME Code Section III.
2a2. The ASME Code Section III components of the TMSS shall be reconciled with the design requirements.	A reconciliation analysis of the components using as-designed and as-built information and ASME Code Design Reports (NCA-3550) will be performed.	ASME Code Design Report(s) (certified, when required by ASME Code) exist and conclude that design reconciliation has been completed in accordance with the ASME Code for as-built reconciliation of the ASME Code Section III components of the TMSS.
2a3. The ASME code components of the TMSS are fabricated, installed, and inspected in accordance with ASME Code Section III requirements.	Inspection of the components will be conducted.	ASME Code Data Report(s) (including N-5 Data reports, where applicable) (certified, when required by ASME code) and inspection reports exist and conclude that the ASME Code Section III components of the TMSS are fabricated, installed, and inspected in accordance with ASME Code Section III requirements.

Table 2.11.1-1

ITAAC For The Turbine Main Steam System

Design Commitment	Inspections, Tests, Analyses	Acceptance Criteria
2b1. The ASME Code Section III components of the TMSS retain their pressure boundary integrity at their design pressure.	A hydrostatic test will be conducted on those Code components of the TMSS required to be hydrostatically tested by the ASME Code.	ASME Code Data Report(s) exist and conclude that the results of the hydrostatic test of the ASME ode components of the TMSS comply with the requirements of the ASME Code Section III.
2b2. The ASME Code Section III piping of the TMSS retains its pressure boundary integrity at its design pressure.	A hydrostatic test will be conducted on the code piping of the TMSS required to be hydrostatically tested by the ASME Code.	ASME Code Data Report(s) exist and conclude that the results of the hydrostatic test of the ASME Code piping of the TMSS comply with the requirements of the ASME Code Section III.
3. Upon receipt of an MSIV closure signal, the Steam Auxiliary Isolation Valve(s) close(s) and required MSIV fission product leakage path TMSS drain valve(s) open(s).	Tests will be performed on the Steam Auxiliary Isolation Valves(s) and required MSIV fission product leakage path TMSS drain valve(s) using simulated MSIV closure signals.	The Steam Auxiliary Isolation Valve(s) close(s) and required MSIV fission product leakage path TMSS drain valve(s) open(s) following receipt of a simulated MSIV closure signal.
4. The Steam Auxiliary Isolation Valve(s) fail(s) closed and required MSIV fission product leakage path TMSS drain valve(s) fail(s) open on loss of electrical power to the valve actuating solenoid or on loss of pneumatic pressure.	A functional test will be performed on Steam Auxiliary Isolation Valve(s) and required MSIV fission product leakage path TMSS drain valve(s).	The Steam Auxiliary Isolation Valve(s) fail(s) closed and required MSIV fission product leakage path TMSS drain valve(s) fail(s) open on loss of electrical power to the valve actuating solenoid or on loss of pneumatic pressure.

Table 2.11.1-1

ITAAC For The Turbine Main Steam System

Design Commitment	Inspections, Tests, Analyses	Acceptance Criteria
5. TMSS piping, which consists of the piping (including supports) for the MSL from the seismic interface restraint (or seismic guide) to the turbine stop valves (non-inclusive), turbine bypass valves (non-inclusive) and the connecting branch lines (nominal 6.35 cm. (2.5 in) and larger) up to and including the first isolation valve which is either normally closed or capable of automatic closure during all modes of normal reactor operation, is classified as Seismic Category II.	An inspection will be performed to verify that a seismic analysis has been completed for the as-built TMSS piping.	The as-built TMSS piping, which consists of the piping (including supports) for the MSL from the seismic interface restraint (or seismic guide) to the turbine stop valves (non-inclusive), turbine bypass valves (non-inclusive) and the connecting branch lines 6.35 cm. (2.5 in.) and larger up to and including the first isolation valve which is either normally closed or capable of automatic closure during all modes of normal reactor operation, meets Seismic Category II requirements.
6. The integrity of the as-built MSIV leakage path to the condenser (main steam piping, bypass piping, required drain piping, and main condensers as shown on Figure 2.11.1-1) is not compromised by non-seismic systems, structures and components.	Inspections and analysis of non-seismic systems, structures and components overhead, adjacent to, and attached to the MSIV leakage path (i.e., the main steam piping, bypass piping, required drain piping and main condenser) will be performed. The as-built non-seismic systems, structures, and components will be reconciled through inspection and analysis with the results of the initial inspection and analysis.	The as-built non-seismic systems, structures and components overhead, adjacent to, and attached to the MSIV leakage path to the condenser will not compromise the integrity of the main steam piping, bypass piping, required drain piping and main condenser.

Table 2.11.1-1

ITAAC For The Turbine Main Steam System

Design Commitment	Inspections, Tests, Analyses	Acceptance Criteria
7. The non-seismic portion of the MSIV leakage path to the condenser (main steam piping from the stop valve (inclusive) to turbine nozzle, bypass piping, required drain piping, and main condenser) maintains structural integrity under SSE loading conditions	An analysis of the as-built non-seismic portion of the MSIV leakage path to the condenser will be performed to verify that it maintains structural integrity under SSE loading conditions.	The as-built non-seismic portion of the MSIV leakage path to the condenser (main steam piping from the stop valve (inclusive) to turbine nozzle, bypass piping, required drain piping, and main condenser) maintains structural integrity under SSE loading conditions.
8. The TMSS piping is sized to ensure that RPV dome to turbine stop valve pressure drop, total main steam system volume, and steamline length are consistent with assumptions in Abnormal Event analyses.	Inspection and analysis of the as-built TMSS piping will be performed to confirm RPV to turbine calculated pressure drop, total main steam system volume, and steamline length are consistent with assumptions in Abnormal Events analyses.	The TMSS piping is sized to be consistent with these Abnormal Events analyses inputs: • Minimum Steamline Pressure Drop from RPV Dome to Turbine Throttle at rated conditions: 0.179 MPa (26 psi) • Minimum Main Steam System Volume: 103.3 m^3 (3648 ft^3) • Minimum Steamline Length: 65.26 m (214.1 ft)

Table 2.11.1-1

ITAAC For The Turbine Main Steam System

Design Commitment	Inspections, Tests, Analyses	Acceptance Criteria
9a. The TMSS piping portion designated as ASME Code Section III is designed in accordance with ASME Code Section III requirements and Seismic Category II requirements.	Inspection of ASME code Design Reports (NCA-3550) and required documents will be conducted. {{Design Acceptance Criteria}}	ASME Code Design Report(s) (NCA-3550) (certified, when required by ASME Code) exist and conclude that the design of the TMSS piping portion designated as ASME Code Section III complies with the requirements of the ASME Code, Section III, and meets Seismic Category II requirements. {{Design Acceptance Criteria}}
9b. The as-built TMSS piping portion designated as ASME Code Section III shall be reconciled with the piping design requirements.	A reconciliation analysis of the piping using the as-designed and as-built information and ASME code Design Reports (NCA-3550) will be performed.	ASME Code Design Report(s) (certified, when required by ASME Code) exist and conclude that design reconciliation has been completed in accordance with the ASME code for as-built reconciliation of the TMSS piping portion designated as ASME Code Section III. The report documents the results of the reconciliation analysis.
9c. The TMSS piping portion designated as ASME Code Section III is fabricated, installed, and inspected in accordance with ASME Code Section III requirements.	Inspections of the piping will be conducted.	ASME Code Data Report(s) (certified, when required by ASME code) and inspection reports (including N-5 Data Reports where applicable) exist and conclude that the TMSS piping portion designated as ASME Code Section III is fabricated, installed, and inspected in accordance with ASME Code Section III requirements.

Table 2.11.1-1

ITAAC For The Turbine Main Steam System

Design Commitment	Inspections, Tests, Analyses	Acceptance Criteria
10a. Pressure boundary welds in the ASME Code Section III components of TMSS meet ASME Code Section III non-destructive examinations requirements.	Inspection of the as-built pressure boundary welds will be performed in accordance with the ASME Code Section III.	ASME Code Report(s) exist and conclude that the ASME Code Section III requirements are met for non-destructive examination of pressure boundary welds in the TMSS components.
10b. Pressure boundary welds in the ASME Code Section III piping of the TMSS meet the ASME Code Section III non-destructive examinations requirements.	Inspection of the as-built pressure boundary welds will be performed in accordance with the ASME Code Section III.	ASME Code Report(s) exist and conclude that the ASME Code Section III requirements are met for non-destructive examination of pressure boundary welds in the TMSS piping.
11a. Valves on lines attached to the RPV that require maintenance have maintenance valves installed such that freeze seals will not be required.	Inspections of piping design isometric drawings will be conducted. {{Design Acceptance Criteria}}	A review of piping design isometric drawings confirms that maintenance valves are included such that freeze seals will not be required. {{Design Acceptance Criteria}}
11b. The as-built location of valves on lines attached to the RPV in the TMSS that require maintenance shall be reconciled to design requirements.	A reconciliation evaluation of valves on lines attached to the RPV that require maintenance using as-designed and as-built information will be performed.	A design reconciliation has been completed for the as-built location of valves relative to the design requirements. The report documents the results of the reconciliation evaluation.
12. The non-return valves shown on functional arrangement Figure 2.11.1-2 and 2.11.1-3 are spring assisted to close.	Inspections of the as-built system will be conducted.	The non-return valves shown on functional arrangement Figure 2.11.1-2 and 2.11.1-3 are spring assisted to close.

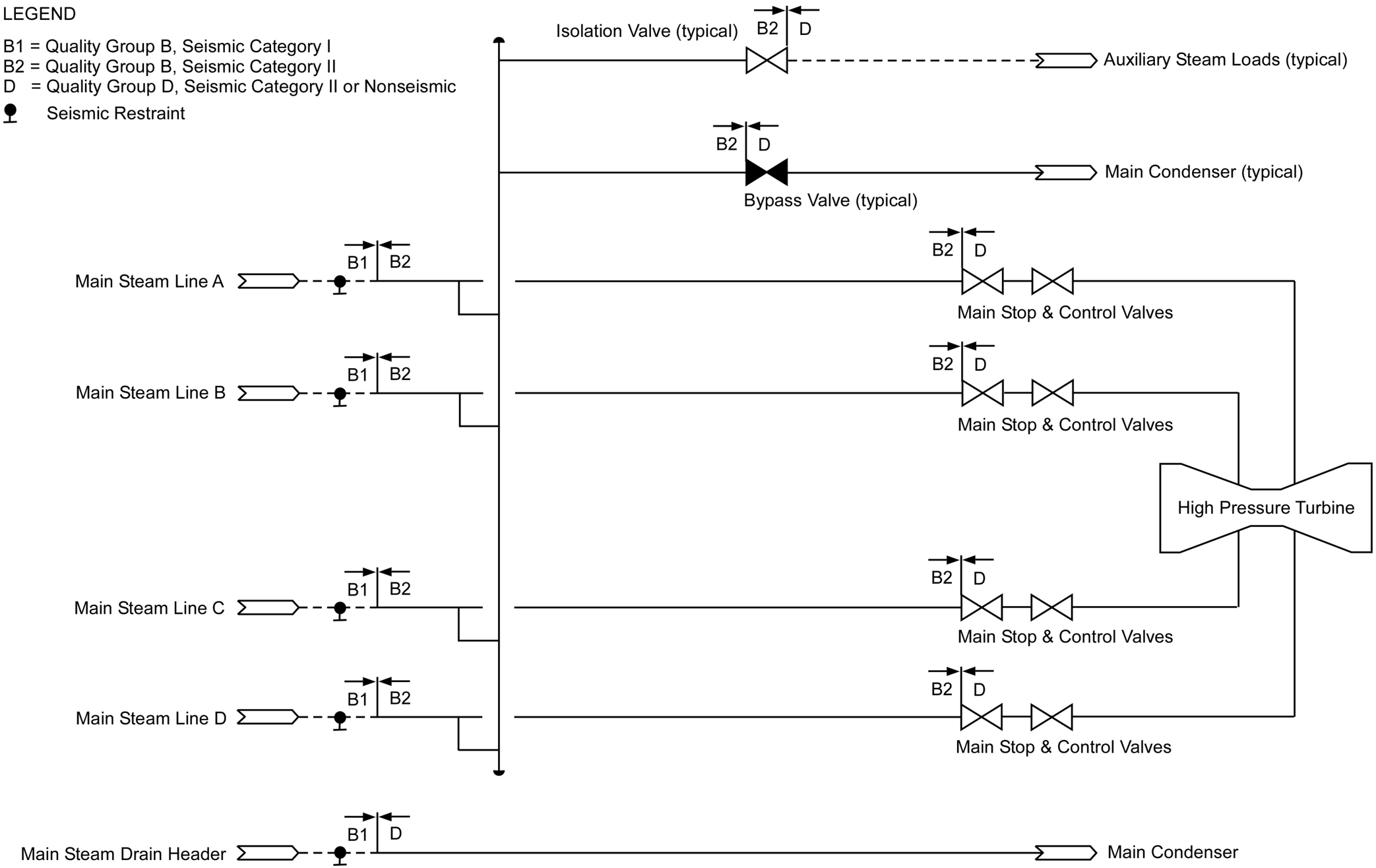

Figure 2.11.1-1. TMSS Functional Arrangement

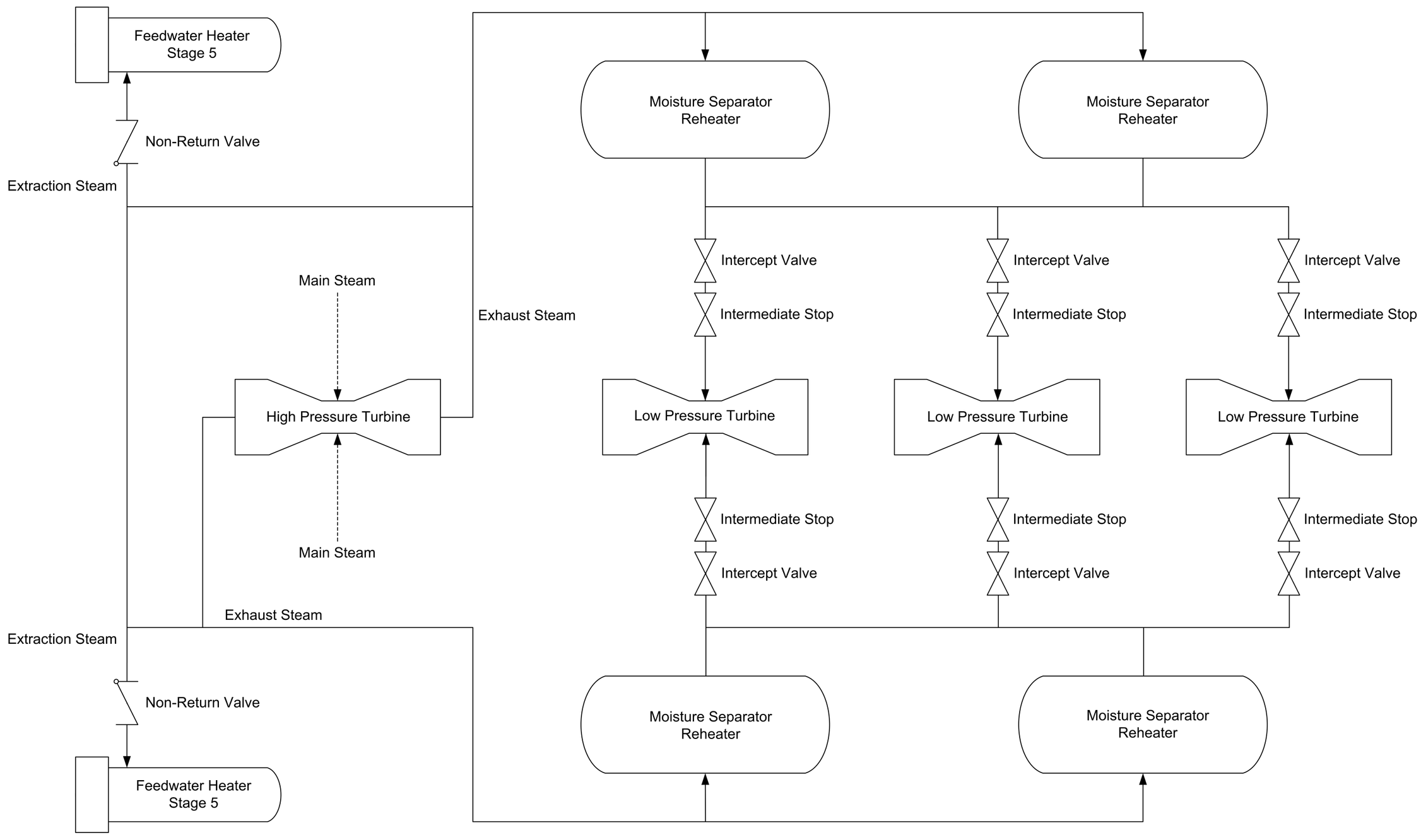

Figure 2.11.1-2. High Pressure Turbine Exhaust Functional Arrangement

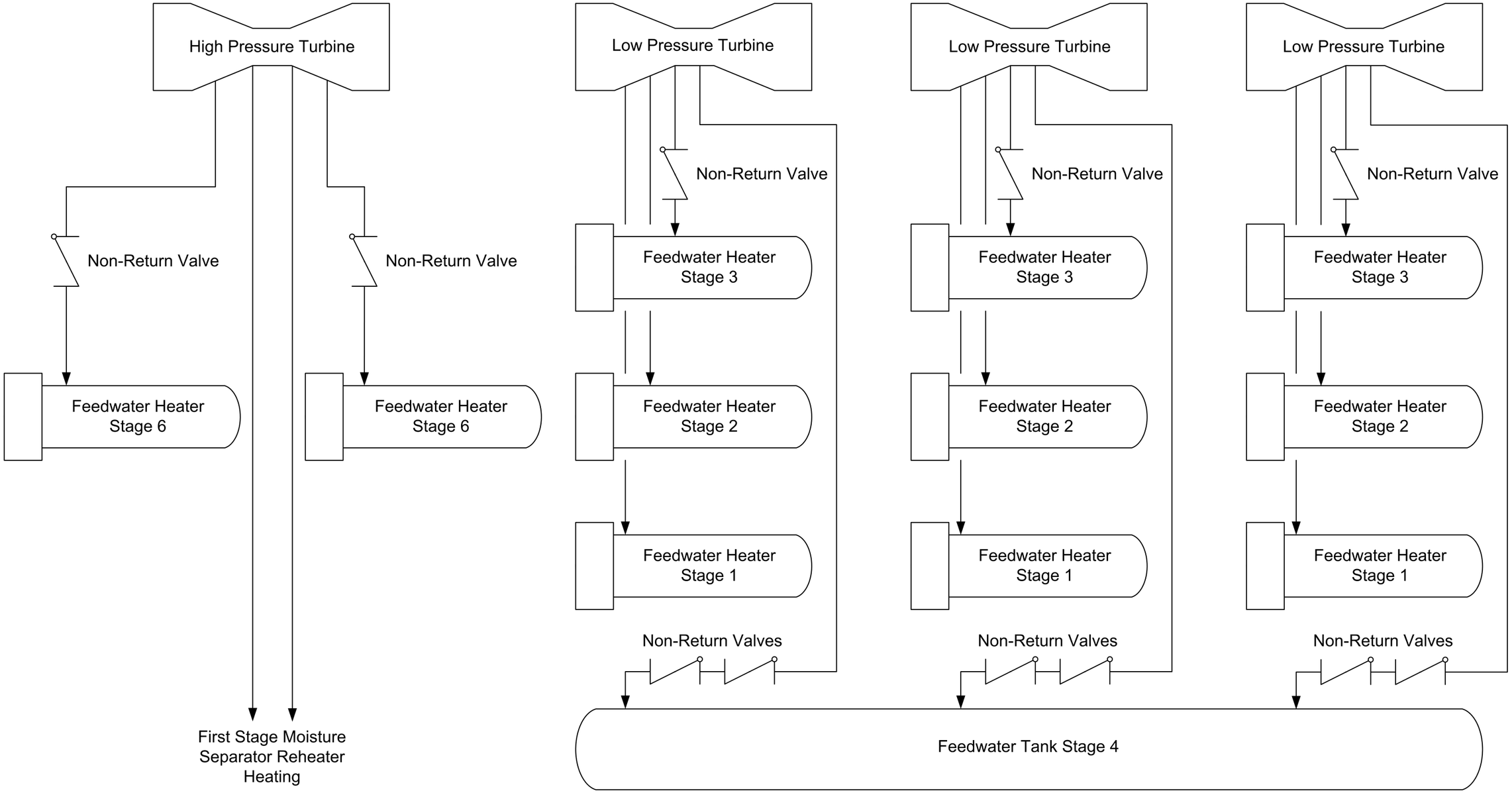

Figure 2.11.1-3. Extraction Steam Functional Arrangement

2.11.2 Condensate and Feedwater System

Design Description

The function of the Condensate and Feedwater System (C&FS) is to receive condensate from the condenser hotwell(s), supply condensate to the Condensate Purification System (CPS), and deliver feedwater to the reactor. The C&FS is classified as nonsafety-related.

Condensate is pumped from the main condenser hotwell(s) by the condensate pumps, passes through the CPS, auxiliary condenser/coolers, low-pressure feedwater heaters and into the feedwater tank. The feedwater booster pumps take suction from the open feedwater tank and provide adequate suction head for the reactor FW pumps, which pump feedwater through the high-pressure feedwater heaters to the reactor. The C&FS boundaries extend from the main condenser outlet to (but not including) the seismic interface restraint outside containment. The C&FS is located in the Reactor Building steam tunnel and Turbine Building.

(1) The functional arrangement for the C&FS is as described in Subsection 2.11.2.

(2) The C&FS provides sufficient feedwater flow and volume to mitigate AOOs.

(3) The C&FS limits maximum feedwater flow to mitigate AOOs.

(4) The C&FS, in conjunction with the feedwater control system, provides sufficient feedwater flow after MSIV isolation to mitigate AOOs.

(5) The C&FS, in conjunction with the feedwater control system, limits the maximum feedwater flow for a single pump following a single active component failure or operator error to mitigate AOOs.

(6) The C&FS, in conjunction with the feedwater control system, is designed so that the loss of feedwater heating is limited in the event of a single operator error or equipment failure.

(7) The C&FS, in conjunction with other Power Cycle Systems, provides a nominal full load final feedwater temperature that is consistent with assumptions in AOOs analyses.

(8) The C&FS has a nominal feedwater flow rate at rated conditions that is consistent with inputs and assumptions in AOOs analyses.

(9) a. Valves on lines attached to the RPV system that require maintenance have maintenance valves such that freeze seals will not be required.

b. The as-built location of valves on lines attached to the RPV system in the C&FS that require maintenance shall be reconciled to design requirements.

Inspections, Tests, Analyses, and Acceptance Criteria

Table 2.11.2-1 provides a definition of the inspections, tests, and analyses, together with associated acceptance criteria for the Condensate and Feedwater System.

Table 2.11.2-1

ITAAC For The Condensate and Feedwater System

Design Commitment	Inspections, Tests, Analyses	Acceptance Criteria
1. The functional arrangement for the C&FS is as described in Subsection 2.11.2.	Inspections of the as-built system will be conducted to confirm the functional arrangement.	The as-built C&FS conforms to the functional arrangement described in Subsection 2.11.2.
2. The C&FS provides sufficient feedwater flow and volume to mitigate AOOs.	An analysis of the as-built C&FS and feedwater pumps will be performed to confirm the minimum capacity of three feedwater pumps. The analysis may be supported by type testing.	Three operating feedwater pumps are capable of supplying 135% of the rated feedwater flow at 7.34 MPaG (1065 psig) for mitigating AOOs.
3. The C&FS limits maximum feedwater flow to mitigate AOOs.	Analysis or type testing of the as-built C&FS and feedwater pumps will be performed to confirm that the C&FS limits maximum feedwater flow. The analysis may be supported by type testing.	The maximum capacity of three feedwater pumps at 7.34 MPaG (1065 psig) is less than or equal to 155% of rated feedwater flow for mitigating AOOs.
4. The C&FS, in conjunction with the feedwater control system, provides sufficient feedwater flow after MSIV isolation to mitigate AOOs.	Inspection or analysis of the as-built feedwater system will be performed to confirm that the C&FS provides sufficient feedwater flow after MSIV isolation.	The C&FS, in conjunction with the feedwater control system, provides feedwater flow greater than or equal to 240 seconds of rated feedwater flow after MSIV isolation for mitigating AOOs.
5. The C&FS, in conjunction with the feedwater control system, limits the maximum feedwater flow for a single pump following a single active component failure or operator error to mitigate AOOs.	Testing or analysis of the as-built C&FS and feedwater pumps or type testing of a single feedwater pump will be performed to confirm that the C&FS limits the maximum feedwater flow from a single pump.	The C&FS, in conjunction with the feedwater control system, limits the maximum feedwater flow for a single pump to 75% of rated flow following a single active component failure or operator error for mitigating AOOs.

Table 2.11.2-1

ITAAC For The Condensate and Feedwater System

Design Commitment	Inspections, Tests, Analyses	Acceptance Criteria
6. The C&FS, in conjunction with the feedwater control system, is designed so that the loss of feedwater heating is limited in the event of a single operator error or equipment failure.	Inspection or analysis of the as-built feedwater system will be performed to confirm that the C&FS, in conjunction with the feedwater control system, limits the loss of feedwater heating in the event of a single operator error or equipment failure.	The C&FS, in conjunction with the feedwater control system, is designed so that the loss of feedwater heating is limited to a final feedwater temperature reduction less than or equal to 55.6°C (100°F) in the event of a single operator error or equipment failure.
7. The C&FS, in conjunction with other Power Cycle Systems, provides a nominal full load final feedwater temperature that is consistent with assumptions in AOOs analyses.	Inspection or analysis of the as-built feedwater system and other Power Cycle Systems will be performed to confirm the nominal full load final feedwater temperature.	The C&FS, in conjunction with other Power Cycle Systems, provides a nominal full load final feedwater temperature of 216°C (420°F) as assumed in AOOs.
8. The C&FS has a nominal feedwater flow rate at rated conditions that is consistent with inputs and assumptions in AOOs analyses.	Testing or analysis of the as-built C&FS and feedwater pumps and type testing of a single feedwater pump will be performed to confirm the nominal feedwater flow rate at rated conditions.	The C&FS has a nominal feedwater flow rate at rated conditions of 2.43×10^3 kg/s (19.3×10^6 lbm/hr) as assumed in AOOs.
9a. Valves on lines attached to the RPV system that require maintenance have maintenance valves such that freeze seals will not be required.	Inspections of piping design isometric drawings will be conducted. {{Design Acceptance Criteria}}	A review of piping design isometric drawings confirms that maintenance valves are included such that freeze seals will not be required. {{Design Acceptance Criteria}}

Table 2.11.2-1

ITAAC For The Condensate and Feedwater System

Design Commitment	Inspections, Tests, Analyses	Acceptance Criteria
9b. The as-built location of valves on lines attached to the RPV system in the C&FS that require maintenance shall be reconciled to design requirements.	A reconciliation evaluation of valves on lines attached to the RPV system that require maintenance using as-designed and as-built information will be performed.	A design reconciliation has been completed for the as-built location of valves relative to the design requirements. The report documents the results of the reconciliation evaluation.

2.11.3 Condensate Purification System

No ITAAC are required for this system.

2.11.4 Main Turbine

Design Description

The Main Turbine is nonsafety-related. The ESBWR standard plant design has a favorably oriented turbine to minimize any potential impact on safety-related structures and equipment.

(1) The physical layout of the Main Turbine system assures that protection is provided to essential systems and components, as required, from the effects of high and moderate energy Main Turbine system piping failures or failure of the connection(s) from the low pressure turbine exhaust hood(s) to the condenser. Essential systems and components are defined in BTP SPLB 3-1 as systems and components required to shut down the reactor and mitigate the consequences of a postulated piping failure, without offsite power. The physical layout also includes protection for the structures, systems, or components (SSCs) listed in Table 2.11.4-1.

(2) The Main Turbine has a favorable orientation to minimize the potential effects of turbine missiles on safety-related structures, systems, or components and the structures, systems, or components listed in Table 2.11.4-1. The safety-related SSCs that are located within the low-trajectory turbine missile strike zone are failsafe or protected by barriers.

(3) The Main Turbine control valve closing times are limited to mitigate Abnormal Events.

(4) The Main Turbine stop valve closing times are limited to mitigate Abnormal Events.

(5) The Main Turbine can accommodate sufficient steam flow through three control valves to mitigate Abnormal Events.

(6) The probability of a strike by a turbine missile is sufficiently low to prevent equipment damage to essential systems.

(7) The as-built turbine material properties, turbine rotor and blade designs, pre-service inspection and testing results and in-service testing and inspection requirements meet the requirements defined in the Turbine Missile Probability Analysis.

Inspections, Tests, Analyses, and Acceptance Criteria

Table 2.11.4-2 provides a definition of the inspections, tests, and analyses, together with associated acceptance criteria for the Main Turbine.

Table 2.11.4-1 Additional Equipment Protected from Turbine Missiles
FPS Diesel Driven Pump
FPS Motor Driven Pump
FPS to FAPCS Connection
PARs
PCCS Vent Fans
CRHAVS Air Handling Units
Emergency Lighting
FPS Water Tank
FPS Diesel Fuel Oil Tank
Ancillary Diesel Generators
Ancillary AC Power Buses
Ancillary DG Fuel Oil Tank
Ancillary DG Fuel Oil Transfer Pump
Ancillary Diesel Building HVAC
CRHAVS Air Handling Unit auxiliary heaters and coolers

Table 2.11.4-2

ITAAC For The Main Turbine

Design Commitment	Inspections, Tests, Analyses	Acceptance Criteria
1. The physical layout of the Main Turbine system assures that protection is provided to essential systems and components, as required, from the effects of high and moderate energy Main Turbine system piping failures or failure of the connection(s) from the low pressure turbine exhaust hood(s) to the condenser. Essential systems and components are defined in BTP SPLB 3-1 as systems and components required to shut down the reactor and mitigate the consequences of a postulated piping failure, without offsite power. The physical layout also includes protection for the structures, systems, or components (SSCs) listed in Table 2.11.4-1.	Inspections of the as-built Turbine Building and plant arrangements will be conducted.	The physical layout of the Main Turbine system protects essential systems and components from the effects of high and moderate energy Main Turbine system piping failures or failure of the connection(s) from the low pressure turbine exhaust hood to the condenser. Essential systems and components are defined in BTP SPLB 3-1 and equipment, structures, systems, or components (SSCs) listed in Table 2.11.4-1 as systems and components required to shut down the reactor and mitigate the consequences of a postulated piping failure, without offsite power.

Table 2.11.4-2

ITAAC For The Main Turbine

Design Commitment	Inspections, Tests, Analyses	Acceptance Criteria
2. The Main Turbine has a favorable orientation to minimize the potential effects of turbine missiles on safety-related structures, systems, or components and the structures, systems, or components listed in Table 2.11-4-1. The safety-related SSCs that are located within the low-trajectory turbine missile strike zone are failsafe or protected by physical barriers.	Inspections of turbine orientation with respect to safety-related SSCs and the SSCs listed in Table 2.11.4-1 will be conducted. The consequences of turbine missile impact on those SSCs that are located within the low-trajectory turbine missile strike zone defined by Figure 1 of Regulatory Guide 1.115 will be analyzed.	An analysis exists that confirms that any safety-related SSCs and SSCs listed in Table 2.11.4-1 that are located inside the low trajectory turbine missile strike zone are failsafe or are protected by physical barriers.
3. The Main Turbine control valve closing times are limited to mitigate Abnormal Events.	Testing or analysis of the as-built Main Turbine and type testing of a single turbine control valve will be performed to confirm control valve closing times.	The Main Turbine control valve fast closing time characteristic is limited to a minimum greater than or equal to the equivalent of 0.08 seconds at 100% NBR. The servo closing time is limited to a minimum greater than or equal to 2.5 seconds for mitigating Abnormal Events.
4. The Main Turbine stop valve closing times are limited to mitigate Abnormal Events.	Testing or analysis of the as-built Main Turbine and type testing of a single turbine stop valve will be performed to confirm stop valve closing time.	The Main Turbine stop valve closing time is limited to a minimum greater than or equal to 0.100 seconds for mitigating Abnormal Events.
5. The Main Turbine can accommodate sufficient steam flow through three control valves to mitigate Abnormal Events.	An inspection of the analysis of the as-built Main Turbine will be performed to confirm that the Main Turbine can accommodate sufficient steam flow through three control valves.	The Main Turbine can accommodate a flow greater than or equal to 85% of rated steam flow through three control valves for mitigating Abnormal Events.

Table 2.11.4-2

ITAAC For The Main Turbine

Design Commitment	Inspections, Tests, Analyses	Acceptance Criteria
6. The probability of a strike by a turbine missile is sufficiently low to prevent equipment damage to essential systems.	A turbine missile probability analysis will be performed to demonstrate the probability of turbine failure resulting in the ejection of turbine rotor (or internal structure) fragments through the turbine casing is less than the regulatory limiting value.	Turbine Missile Probability Analysis Report(s) exist and conclude that the probability of turbine failure resulting in the ejection of turbine rotor (or internal structure) fragments through the turbine casing is less than $1x10^{-4}$ per year.
7. The as-built turbine material properties, turbine rotor and blade designs, pre-service inspection and testing results and in-service testing and inspection requirements meet the requirements defined in the Turbine Missile Probability Analysis.	An inspection of the as-built turbine material properties, turbine rotor and blade designs, pre-service inspection and testing results, and in-service testing and inspection requirements will be conducted.	The as-built turbine material properties, turbine rotor and blade designs, pre-service inspection and testing results and in-service inspection and testing requirements meet the requirements of the Turbine Missile Probability Analysis.

2.11.5 Turbine Gland Seal System

Design Description

The Turbine Gland Seal System (TGSS) minimizes the escape of radioactive steam from the turbine shaft/casing penetrations and valve stems.

(1) The TGSS functional arrangement is described in Subsection 2.11.5 and shown in Figure 2.11.5-1.

Inspections, Tests, Analyses, and Acceptance Criteria

Table 2.11.5-1 provides a definition of the inspections, tests, and analyses, together with associated acceptance criteria for the TGSS.

Table 2.11.5-1

ITAAC For The Turbine Gland Seal System

Design Commitment	Inspections, Tests, Analyses	Acceptance Criteria
1. The TGSS functional arrangement is described in Subsection 2.11.5 and shown in Figure 2.11.5-1.	Inspections of the as-built system will be performed.	The as-built TGSS conforms to the functional arrangement as described in Subsection 2.11.5 and as shown on Figure 2.11.5-1.

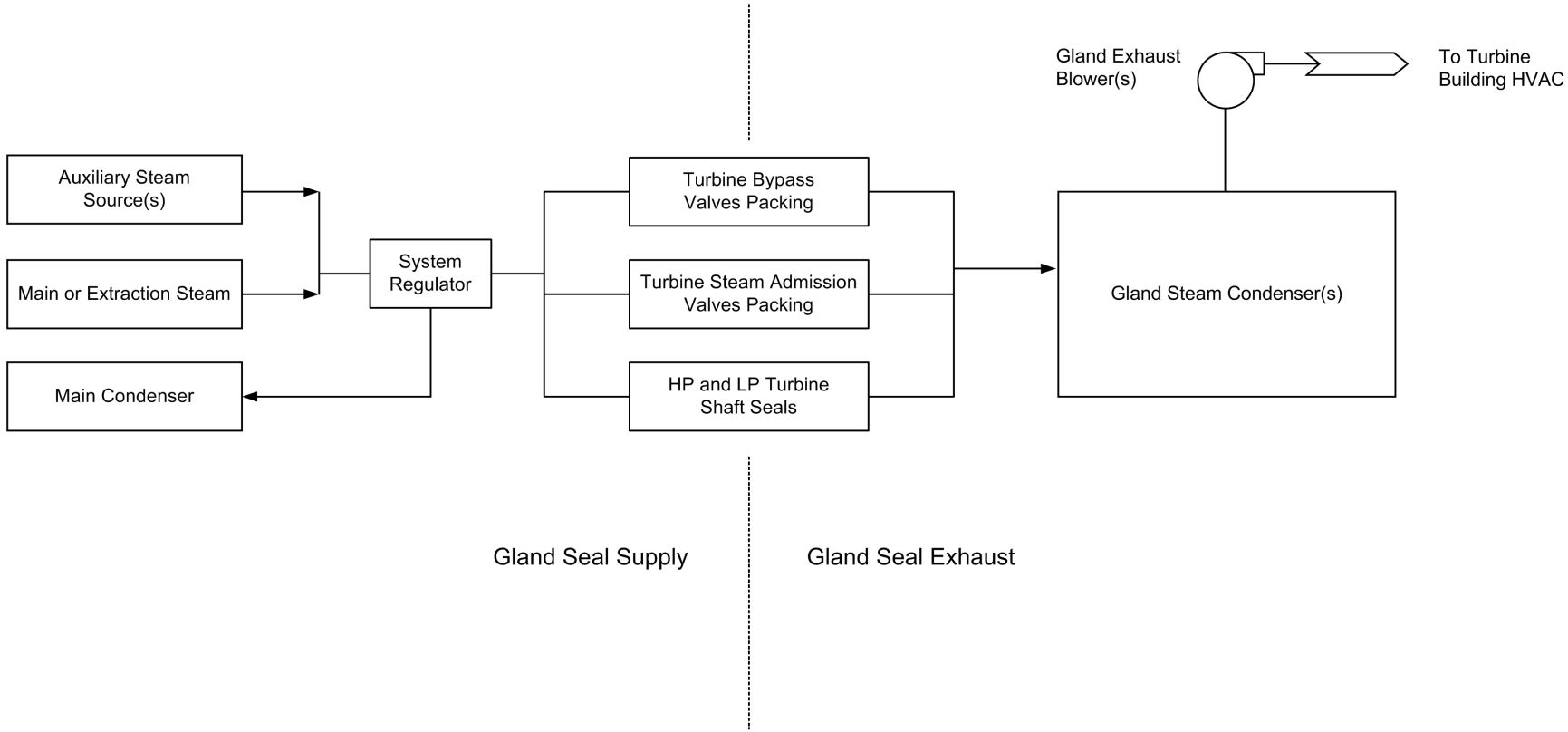

Figure 2.11.5-1. Turbine Gland Seal System Arrangement

2.11.6 Turbine Bypass System

Design Description

The Turbine Bypass System (TBS) consists of hydraulically operated Turbine Bypass Valves (TBVs) that are connected to the main steam header via Turbine Main Stream System (TMSS) piping. The TBS also includes the piping down stream of the TBVs to the main condenser. The TBS passes steam to the main condenser in conjunction with the TMSS under the control of the Steam Bypass and Pressure Control (SB&PC) system. The TBS is classified as nonsafety-related. The TBS is used to mitigate AOOs. The TBS is located in the Turbine Building.

(1) The TBS functional arrangement is as described in Subsection 2.11.6.

(2) The TBVs are controlled by the SB&PC System.

(3) The TBS steam pressure retaining and structural components are analyzed to demonstrate structural integrity under SSE loading conditions.

(4) The TBS accommodates steam flow to mitigate Abnormal Events.

(5) The TBS maintains sufficient capacity to mitigate Abnormal Events with a single active failure.

(6) The TBS design limits the capacity of individual TBVs.

(7) The TBS design allows the TBVs to open rapidly to support Abnormal Event mitigation.

Inspections, Tests, Analyses, and Acceptance Criteria

Table 2.11.6-1 provides a definition of the inspections, tests, and analyses, together with associated acceptance criteria for the TBS.

Table 2.11.6-1

ITAAC For The Turbine Bypass System

Design Commitment	Inspections, Tests, Analyses	Acceptance Criteria
1. The TBS functional arrangement is as described in Subsection 2.11.6.	Inspections of the as-built TBS will be conducted.	The as-built TBS conforms to the functional arrangement described in Subsection 2.11.6.
2. The TBVs are controlled by the SB&PC System.	Tests will be conducted using a simulated signal.	The TBVs operate upon receipt of a simulated signal from the SB&PC System.
3. The TBS steam pressure retaining and structural components are analyzed to demonstrate structural integrity under SSE loading conditions.	An inspection of the as-built TBS will be performed to verify that it conforms with the seismic analysis.	The as-built TBS can withstand a SSE without loss of structural integrity.
4. The TBS accommodates steam flow to mitigate Abnormal Events.	An inspection will be performed to confirm that the as-built TBS accommodates steam flow to mitigate Abnormal Events.	The TBS accommodates at least 110% of rated main steam flow for mitigating AOOs.
5. The TBS maintains sufficient capacity to mitigate Abnormal Events with a single active failure.	An inspection will be performed to confirm that the as-built TBS maintains sufficient capacity to mitigate Abnormal Events with a single active failure.	The TBS maintains capacity greater than or equal to 50% of the maximum capacity for a period greater than or equal to 6 seconds with a single active failure for mitigating AOOs.
6. The TBS design limits the capacity of individual TBVs.	A type test and analysis of the TBS will be performed to confirm that the TBS design limits the capacity of individual TBVs.	Analysis and test data exist and conclude that no single TBV has a capacity greater than 15% of rated steam flow.

Table 2.11.6-1

ITAAC For The Turbine Bypass System

Design Commitment	Inspections, Tests, Analyses	Acceptance Criteria
7. The TBS design allows the TBVs to open rapidly to support AOO mitigation.	Testing or analyses of the TBS will be performed to confirm that the as-built TBS design allows the TBVs to open rapidly to support AOO mitigation.	The TBS can achieve a flow greater than or equal to 80% of total bypass capacity in a time period less than or equal to 0.17 seconds after initiation of TBV fast opening function for AOO mitigation.

2.11.7 Main Condenser

Design Description

The Main Condenser is classified as nonsafety-related. The MC shell provides a hold-up volume for Main Steam Isolation Valve (MSIV) fission product leakage and accommodates the TBS steam flow to mitigate Abnormal Events.

(1) The main condenser structural members, supports, and anchors are designed to maintain condenser integrity following a safe shutdown earthquake (SSE).

(2) The main condenser can accommodate TBS steam flow to mitigate Abnormal Events.

(3) The actual volume and plate out areas is greater than that assumed in Design Basis dose calculations.

Safety-related condenser pressure instruments are described in Subsection 2.2.7. Main Condenser Evacuation System (MCES) effluent radiation monitoring is described in Subsection 2.3.1.

Inspections, Tests, Analyses, and Acceptance Criteria

Table 2.11.7-1 provides a definition of the inspections, tests, and analyses, together with associated acceptance criteria for the Main Condenser.

Table 2.11.7-1

ITAAC For The Main Condenser

Design Commitment	Inspections, Tests, Analyses	Acceptance Criteria
1. The main condenser structural members, supports, and anchors are designed to maintain condenser integrity following a safe shutdown earthquake (SSE).	An inspection will be performed to verify the ability of the as-built main condenser structural members, supports, and anchors to maintain condenser integrity following a safe shutdown earthquake.	The as-built main condenser structural members, supports, and anchors are able to maintain condenser integrity following a safe shutdown earthquake.
2. The main condenser can accommodate TBS steam flow to mitigate Abnormal Events.	An inspection of the as-built condenser will be performed to confirm the capability of the as-built condenser to accommodate TBS steam flow to mitigate Abnormal Events.	The as-built main condenser has the capability to accommodate TBS steam flow for at least 6 seconds following a loss of preferred power without the main condenser pressure exceeding the TBV isolation setpoint to mitigate AOOs.
3. The actual volume and plate out areas is greater than that assumed in Design Basis dose calculations.	The volume and plate out areas in the condenser final design shall be verified by inspection and analysis.	The as-built condenser exceeds the following parameters used to calculate the plate out factors for the dose analysis: • Condenser volume of ≥ 5.93E+3 m^3 (2.09E+5 ft^3) • Condenser horizontal plate area of ≥ 418 m^2 (4500 ft^2); and • Condenser horizontal cylinder area ≥ 2793 m^2 (30060 ft^2)

2.11.8 Circulating Water System

No ITAAC are required for this system.

2.11.9 Power Cycle Auxiliary Systems

Design Description

The Power Cycle includes a number of auxiliary systems. The Power Cycle Auxiliary Systems include the Heater Drain and Vent System, Turbine Generator Control System, Turbine Lubricating Oil System, Moisture Separator Reheater System, Extraction System, Turbine Hydraulics System, Turbine Auxiliary Steam System, Generator System, Hydrogen Gas Control System, Stator Cooling Water System, Generator Lubricating and Seal Oil System, Hydrogen and Carbon Dioxide Bulk Storage System, and Generator Excitation System.

No ITAAC are required for this system.

2.12 AUXILIARY SYSTEMS

The following subsections describe the auxiliary systems for the ESBWR.

2.12.1 Makeup Water System

Design Description

The Makeup Water System (MWS) is a nonsafety-related system, and has no safety design basis other than provision for safety-related containment penetrations and isolation valves.

The MWS has safety-related containment penetrations and isolation valves that are addressed in Subsection 2.15.1.

(1) (Deleted)

Inspections, Tests, Analyses, and Acceptance Criteria

Subsection 2.15.1 provides a definition of the inspections, tests, and analyses, together with associated acceptance criteria for the MWS.

Table 2.12.1-1

(Deleted)

Design Commitment	Inspections, Tests, Analyses	Acceptance Criteria
1. (Deleted)		

2.12.2 Condensate Storage and Transfer System

No ITAAC are required for this system.

2.12.3 Reactor Component Cooling Water System

Design Description

The Reactor Component Cooling Water System (RCCWS) does not perform any safety-related function. Therefore, the RCCWS has no safety design basis. The RCCWS is subject to additional regulatory oversight for its nonsafety-related functions to provide post 72-hour cooling to the nuclear island chillers and standby diesel generators and to provide cooling support to FAPCS.

The functional arrangement of the RCCWS is shown on Figure 2.12.3-1.

(1) The RCCWS functional arrangement is as described in the Design Description of Subsection 2.12.3 and is shown on Figure 2.12.3-1.

(2) The RCCWS provides the nonsafety-related function to support post-72 hour cooling for nuclear island chillers and standby diesel generators and provides cooling support for FAPCS.

(3) RCCWS flow can be established and controlled from the MCR.

(4) RCCWS flow indication is provided in the MCR.

Inspections, Tests, Analyses, and Acceptance Criteria

Table 2.12.3-1 provides definitions of the inspections, tests, and analyses, together with associated acceptance criteria for the RCCWS.

Table 2.12.3-1

ITAAC For The Reactor Component Cooling Water System

Design Commitment	Inspections, Tests, Analyses	Acceptance Criteria
1. The RCCWS functional arrangement is as described in the Design Description of Subsection 2.12.3 and as shown on Figure 2.12.3-1.	Inspection of the as-built system will be performed.	The as-built RCCWS System conforms to the functional arrangement described in the Design Description of this Subsection 2.12.3 and as shown on Figure 2.12.3-1.
2. The RCCWS provides the nonsafety-related function to support post-72 hour cooling for nuclear island chillers and standby diesel generators and provides cooling support for FAPCS.	Testing of the RCCWS will be performed to verify flow to the nuclear island chillers, standby diesel generators and FAPCS.	A flow path exists from the RCCWS to the nuclear island chillers, standby diesel generators, and to support operation of FAPCS.
3. RCCWS flow can be established and controlled from the MCR.	Testing to demonstrate RCCWS flow will be performed on the RCCWS components using controls in the MCR.	RCCWS pumps can be operated and flow controlled from the MCR.
4. RCCWS flow indication is provided in the MCR.	Inspection will verify that RCCWS flow indication exists and can be retrieved in the MCR.	The RCCWS flow indication exists and can be retrieved in the MCR.

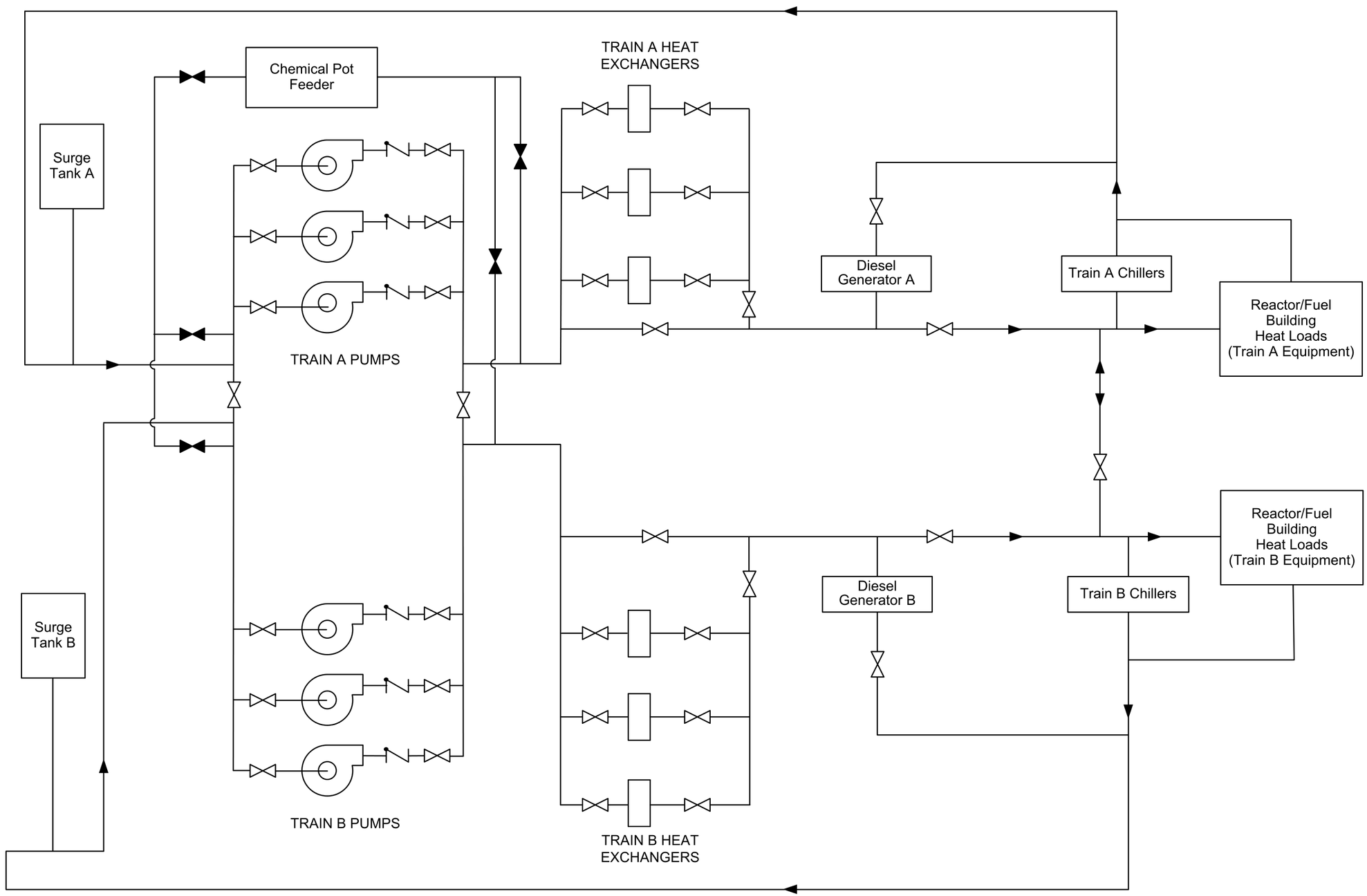

Figure 2.12.3-1. Reactor Component Cooling Water System Functional Arrangement

2.12.4 Turbine Component Cooling Water System

No ITAAC are required for this system.

2.12.5 Chilled Water System

The Chilled Water System (CWS) does not perform or ensure any active safety-related function, and is not required to achieve or maintain safe shutdown. The CWS has safety-related containment penetrations and isolation valves, which are required to maintain containment integrity. In addition, the NICWS is subject to additional regulatory oversight for its nonsafety-related functions to provide post 72-hour cooling support for RCCWS and HVAC systems.

The CWS has safety-related containment penetrations and isolation valves and is addressed in Subsection 2.15.1.

The functional arrangement of the NICWS is shown on Figure 2.12.5-1.

(1) The NICWS functional arrangement is described in the Design Description of Subsection 2.12.5 and as shown on Figure 2.12.5-1.

(2) The NICWS provides the nonsafety-related function to support post-72 hour cooling for RCCWS and HVAC systems.

(3) NICWS flow can be established and controlled from the MCR.

(4) NICWS flow indication is provided in the MCR.

(5) (Deleted)

Inspections, Tests, Analyses, and Acceptance Criteria

Table 2.12.5-1 provides definitions of the inspections, tests, and analyses, together with associated acceptance criteria for the CWS.

Table 2.12.5-1

ITAAC For The Chilled Water System

Design Commitment	Inspections, Tests, Analyses	Acceptance Criteria
1. The NICWS functional arrangement is described in the Design Description of Subsection 2.12.5 and as shown on Figure 2.12.5-1.	Inspection of the as-built system will be performed.	The as-built NICWS System conforms to the functional arrangement as described in the Design Description of this Subsection 2.12.5 and as shown on Figure 2.12.5-1.
2. The NICWS provides the nonsafety-related function to support post-72 hour cooling for RCCWS and HVAC systems.	Testing of the NICWS will be performed to verify flow to the RCCWS and HVAC systems.	A flow path exists from the NICWS to the RCCWS and HVAC systems.
3. NICWS flow can be established and controlled from the MCR.	Testing will be performed to demonstrate NICWS flow will be performed on the NICWS components using controls in the MCR.	NICWS pumps and chillers can be operated and flow controlled from the MCR.
4. NICWS flow indication is provided in the MCR.	Inspection will verify that NICWS flow indication exists and can be retrieved in the MCR.	The NICWS flow indication exists and can be retrieved in the MCR.
5. (Deleted)		

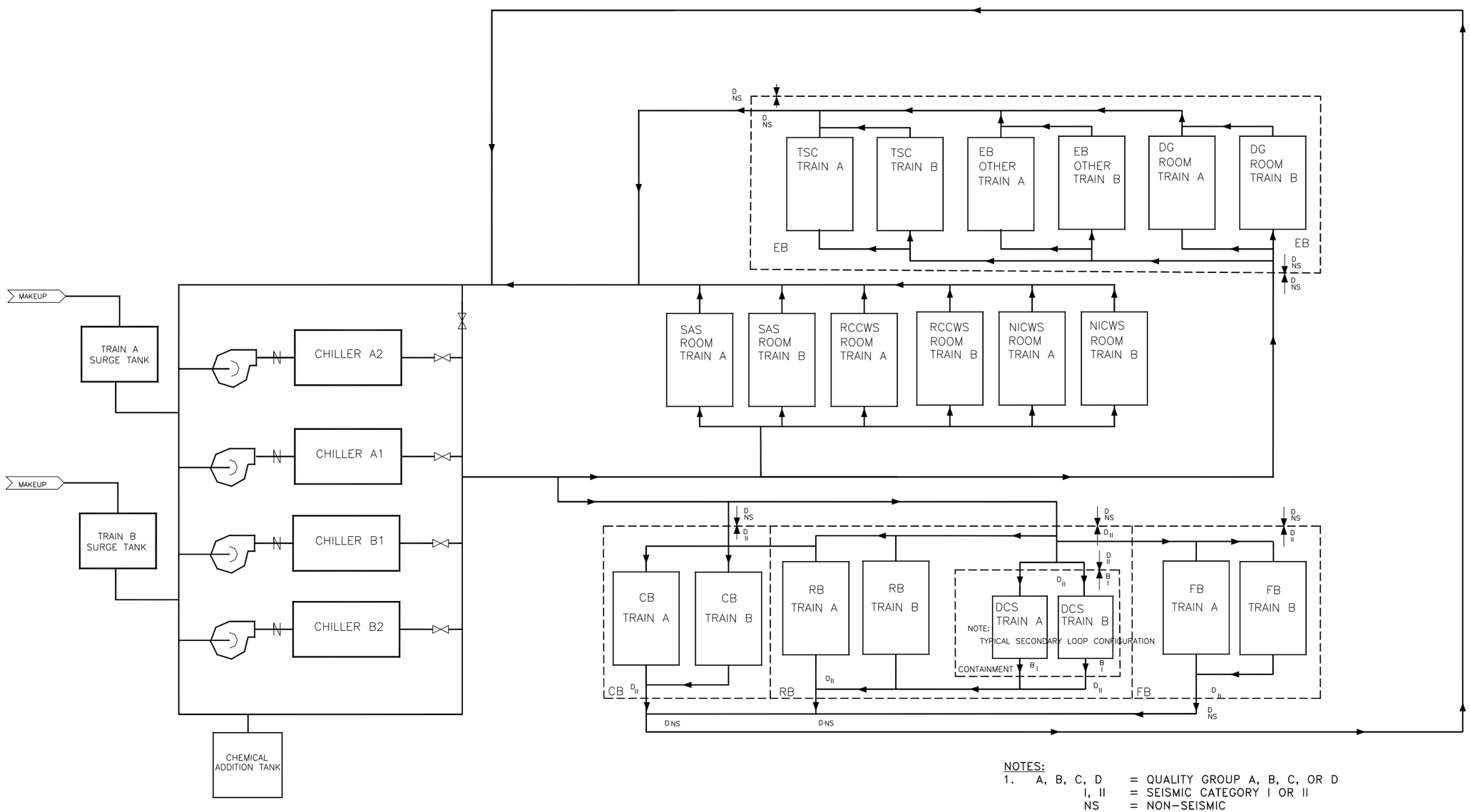

Figure 2.12.5-1. NICWS Functional Arrangement

2.12.6 Oxygen Injection System

No ITAAC are required for this system.

2.12.7 Plant Service Water System

Design Description

The Plant Service Water System (PSWS) does not perform or ensure any safety-related function, is not required to achieve or maintain safe shutdown, and has no interface with any safety-related component.

The functional arrangement of the PSWS is shown on Figure 2.12.7-1.

(1) The PSWS functional arrangement is as described in the Design Description of Subsection 2.12.7 and as shown on Figure 2.12.7-1.

(2) The PSWS provides the nonsafety-related functions to support post-72 hour cooling for RCCWS.

(3) PSWS flow can be established and controlled from the MCR.

(4) PSWS flow indication is provided in the MCR.

Inspections, Tests, Analyses, and Acceptance Criteria

Table 2.12.7-1 provides definitions of the inspections, tests, and analyses, together with associated acceptance criteria for the PSWS.

Table 2.12.7-1

ITAAC For The Plant Service Water System

Design Commitment	Inspections, Tests, Analyses	Acceptance Criteria
1. The PSWS functional arrangement is as described in the Design Description of Subsection 2.12.7 and as shown on Figure 2.12.7-1.	Inspection of the as-built system will be performed.	The as-built PSWS System conforms to the functional arrangement as described in the Design Description of Subsection 2.12.7 and as shown on Figure 2.12.7-1.
2. The PSWS provides the nonsafety-related functions to support post-72 hour cooling for RCCWS.	Testing of the PSWS will be performed to verify flow to the RCCWS.	A flow path exists from the PSWS to the RCCWS.
3. PSWS flow can be established and controlled from the MCR.	Testing will be performed to demonstrate flow on the PSWS components using controls in the MCR.	PSWS pumps can be operated and flow controlled from the MCR.
4. PSWS flow indication is provided in the MCR.	Inspection will verify that PSWS flow indication exists and can be retrieved in the MCR.	The PSWS flow indication exists and can be retrieved in the MCR.

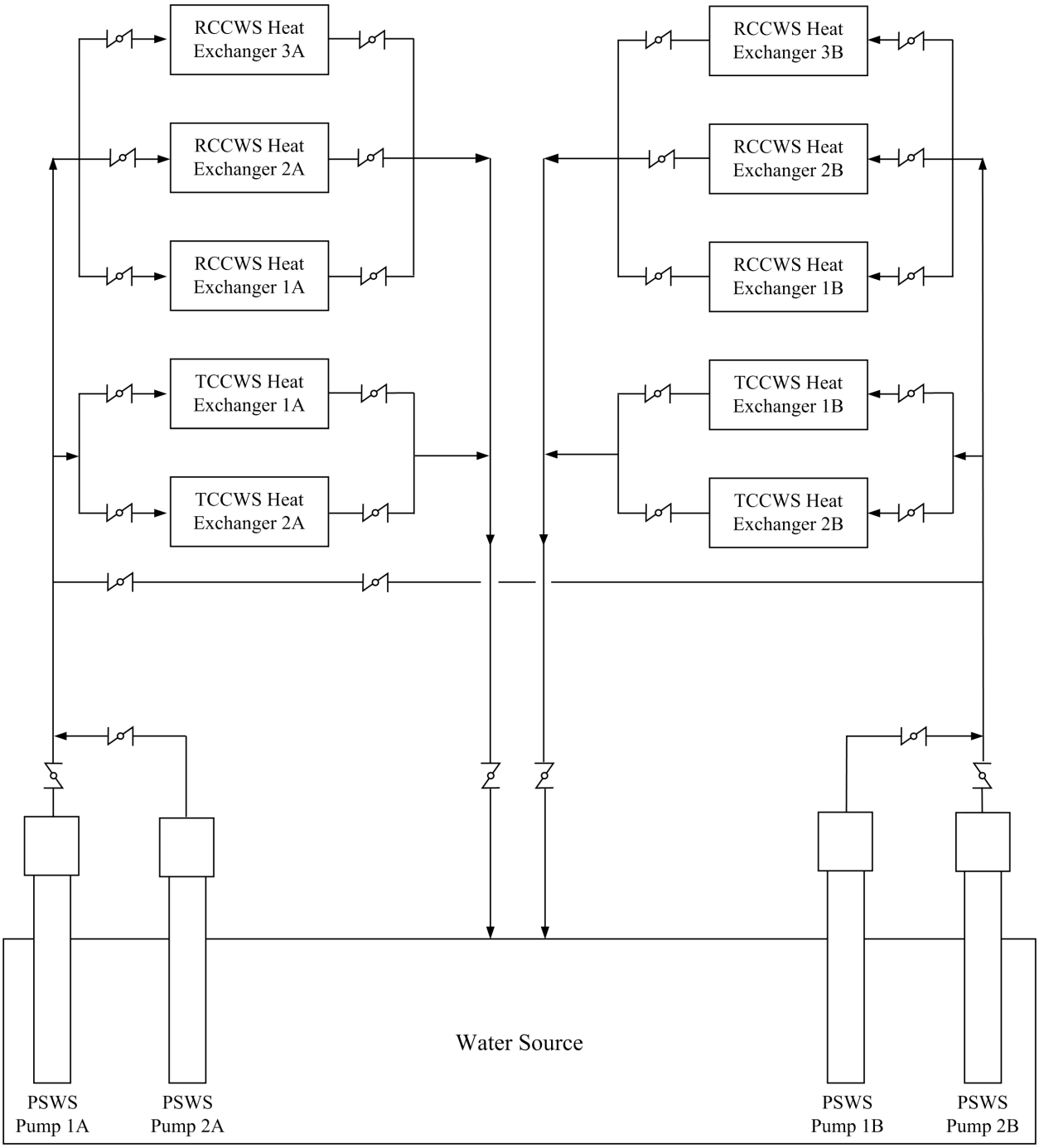

Figure 2.12.7-1. Plant Service Water System Functional Arrangement

2.12.8 Service Air System

Design Description

The Service Air System (SAS) is a nonsafety-related system, and has no safety design basis other than provisions for safety-related containment penetrations and isolation valves.

The SAS has safety-related containment penetrations and isolation valves and are addressed in Subsection 2.15.1.

(1) (Deleted)

Inspections, Tests, Analyses, and Acceptance Criteria

Subsection 2.15.1 provides a definition of the inspections, tests, and analyses, together with associated acceptance criteria for the SAS.

Table 2.12.8-1

(Deleted)

Design Commitment	Inspections, Tests, Analyses	Acceptance Criteria
1. (Deleted)		

2.12.9 Instrument Air System

No ITAAC are required for this system.

2.12.10 High Pressure Nitrogen Supply System

Design Description

The High Pressure Nitrogen Supply System (HPNSS) is a nonsafety-related system, and has no safety design basis other than provision for safety-related containment penetrations and isolation valves.

The HPNSS has safety-related containment penetrations and isolation valves and is addressed in Subsection 2.15.1.

(1) (Deleted)

Inspections, Tests, Analyses, and Acceptance Criteria

Subsection 2.15.1 provides a definition of the inspections, tests, and analyses, together with associated acceptance criteria for the High Pressure Nitrogen Supply System.

Table 2.12.10-1

(Deleted)

Design Commitment	Inspections, Tests, Analyses	Acceptance Criteria
1. (Deleted)		

2.12.11 Auxiliary Boiler System

No ITAAC are required for this system.

2.12.12 Potable Water and Sanitary Waste

No ITTAC are required for this system.

2.12.13 Hydrogen Water Chemistry System

This system is optional. If the optional system is implemented in a specific plant, no ITAAC are required for this system.

2.12.14 Process Sampling System

No ITTAC are required for this system.

2.12.15 Zinc Injection System

No ITAAC are required for this system.

2.12.16 Freeze Protection

No ITAAC are required for this system.

2.12.17 Station Water System

No ITAAC are required for this system.

2.13 ELECTRICAL SYSTEMS

2.13.1 Electric Power Distribution System

Design Description

The purpose of the Electric Power Distribution System is to provide power to the power generation nonsafety-related loads and the plant's investment protection (PIP) nonsafety-related loads. The PIP buses also supply power to the four (4) safety-related, 480VAC, Isolation Power Center buses and the two (2) ancillary diesel buses. The nonsafety-related PIP buses and ancillary diesel buses have a function to supply power to RTNSS credited loads.

The Electric Power Distribution System alarms, displays, controls, and status indications in the main control room are addressed by Section 3.3.

Environmental qualification of safety-related 480 VAC Isolation Power Center equipment is addressed in Section 3.8.

(1) The functional arrangement of Electric Power Distribution System is as described in the Design Description of Subsection 2.13.1 and Table 2.13.1-1, and as shown on Figure 2.13.1-1.

(2) The 480 VAC Isolation Power Center equipment identified as Seismic Category I in Table 2.13.1-1 can withstand Seismic Category I loads without loss of safety function.

(3) a. Independence is provided between safety-related divisions as defined in Regulatory Guide 1.75.

b. Physical separation and electrical isolation are provided between safety-related divisions, and between safety-related divisions and nonsafety-related equipment as defined in Regulatory Guide 1.75.

(4) Each safety-related Isolation Power Center supplies power to safety-related loads in its respective division.

(5) Isolation Power Centers and their associated loads are protected against under voltage, degraded voltage and under-frequency conditions.

(6) a. The Electric Power Distribution System provides the capability for distributing nonsafety-related AC power from onsite sources to nonsafety-related RTNSS loads.

b. The Electric Power Distribution System provides a PIP bus under voltage signal to trip the PIP bus normal and alternate preferred power supply breakers.

(7) (Deleted)

(8) (Deleted)

(9) Equipment within the onsite portion of the Preferred Power Supply (PPS) is rated to supply necessary load requirements, including power, voltage, and frequency, during design basis operating modes.

(10) Equipment within the onsite portion of the PPS is rated to interrupt analyzed fault currents, including the fault current contribution from the offsite portion of the PPS.

(11) a. The onsite portions of the normal preferred power supply circuits are physically separate from the onsite portions of the alternate preferred power supply circuits from the Unit Auxiliary Transformer (UAT) and Reserve Auxiliary Transformer (RAT) to the PIP bus incoming line breakers.

b. The onsite portions of the normal preferred power supply circuits are electrically independent from the onsite portions of the alternate preferred power supply circuits from the UAT and RAT to the PIP bus incoming line breakers.

c. The onsite portions of the normal preferred power supply circuit breaker control power, instrumentation, and control circuits are electrically independent from the alternate preferred power supply circuit breaker control power, instrumentation, and control circuits from the UAT and RAT to the PIP bus incoming line breakers.

d. The onsite portions of the normal preferred power supply circuit breaker control power, instrumentation, and control circuits are physically separated from the alternate preferred power supply circuit breaker control power, instrumentation, and control circuits from the UAT and RAT to the PIP bus incoming line breakers.

e. The UAT and RAT are physically separated to minimize the likelihood of their simultaneous failure under design basis conditions to the extent practical.

(12) a. The normal power supply circuits are physically separate from the alternate power supply circuits from the PIP buses to the Isolation Power Center bus incoming line breakers.

b. The normal power supply circuits are electrically independent from the alternate power supply circuits from the PIP buses to the Isolation Power Center bus incoming line breakers.

c. The normal power supply circuit breaker control power, instrumentation, and control circuits are electrically independent from the alternate power supply circuit breaker control power, instrumentation, and control circuits from the PIP buses to the Isolation Power Center bus incoming line breakers.

d. The onsite portions of the normal power supply circuit breaker control power, instrumentation, and control circuits are physically separated from the alternate power supply circuit breaker control power, instrumentation, and control circuits from the PIP buses to the Isolation Power Center bus incoming line breakers.

(13) Interrupting devices for the Electric Power Distribution Preferred Power System are coordinated so as to isolate faulted equipment or circuits of the Plant Investment Protection Buses from the Preferred Power System, prevent damage to equipment, protect personnel, minimize system disturbances, and maintain continuity of the Preferred Power Supply System from the PIP buses to all safety-related loads and designated RTNSS B and C loads.

Inspections, Tests, Analyses, and Acceptance Criteria

Table 2.13.1-2 provides a definition of the inspections, tests, and analyses, together with associated acceptance criteria for the Electric Power Distribution System.

Table 2.13.1-1

Electrical Power Distribution System Equipment

Equipment Description	Location	Seismic Cat. I	Safety Related
Isolation Power Center Bus A31 Normal Main Circuit Breaker	Reactor Building	Yes	Yes
Isolation Power Center Bus A31 Alternate Main Circuit Breaker	Reactor Building	Yes	Yes
Isolation Power Center Bus B31 Normal Main Circuit Breaker	Reactor Building	Yes	Yes
Isolation Power Center Bus B31 Alternate Main Circuit Breaker	Reactor Building	Yes	Yes
Isolation Power Center Bus C31 Normal Main Circuit Breaker	Reactor Building	Yes	Yes
Isolation Power Center Bus C31 Alternate Main Circuit Breaker	Reactor Building	Yes	Yes
Isolation Power Center Bus D31 Normal Main Circuit Breaker	Reactor Building	Yes	Yes
Isolation Power Center Bus D31 Alternate Main Circuit Breaker	Reactor Building	Yes	Yes
Isolation Power Center Bus A31 Supply Breaker to Division 1 250 VDC Bus 11 Normal Battery Charger	Reactor Building	Yes	Yes
Isolation Power Center Bus A31 Supply Breaker to Division 1 250 VDC Bus 12 Normal Battery Charger	Reactor Building	Yes	Yes
Isolation Power Center Bus A31 Supply Breaker to Division 1 250 VDC Standby Battery Charger	Reactor Building	Yes	Yes
Isolation Power Center Bus A31 Supply Breaker to Division 1 UPS Rectifier 1-1	Reactor Building	Yes	Yes
Isolation Power Center Bus A31 Supply Breaker to Division 1 UPS Rectifier 1-2	Reactor Building	Yes	Yes

Table 2.13.1-1

Electrical Power Distribution System Equipment

Equipment Description	Location	Seismic Cat. I	Safety Related
Isolation Power Center Bus B31 Supply Breaker to Division 2 250 VDC Bus 21 Normal Battery Charger	Reactor Building	Yes	Yes
Isolation Power Center Bus B31 Supply Breaker to Division 2 250 VDC Bus 22 Normal Battery Charger	Reactor Building	Yes	Yes
Isolation Power Center Bus B31 Supply Breaker to Division 2 250 VDC Standby Battery Charger	Reactor Building	Yes	Yes
Isolation Power Center Bus B31 Supply Breaker to Division 2 UPS Rectifier 2-1	Reactor Building	Yes	Yes
Isolation Power Center Bus B31 Supply Breaker to Division 2 UPS Rectifier 2-2	Reactor Building	Yes	Yes
Isolation Power Center Bus C31 Supply Breaker to Division 3 250 VDC Bus 31 Normal Battery Charger	Reactor Building	Yes	Yes
Isolation Power Center Bus C31 Supply Breaker to Division 3 250 VDC Bus 32 Normal Battery Charger	Reactor Building	Yes	Yes
Isolation Power Center Bus C31 Supply Breaker to Division 3 250 VDC Standby Battery Charger	Reactor Building	Yes	Yes
Isolation Power Center Bus C31 Supply Breaker to Division 3 UPS Rectifier 3-1	Reactor Building	Yes	Yes
Isolation Power Center Bus C31 Supply Breaker to Division 3 UPS Rectifier 3-2	Reactor Building	Yes	Yes
Isolation Power Center Bus D31 Supply Breaker to Division 4 250 VDC Bus 41 Normal Battery Charger	Reactor Building	Yes	Yes
Isolation Power Center Bus D31 Supply Breaker to Division 4 250 VDC Bus 42 Normal Battery Charger	Reactor Building	Yes	Yes

Table 2.13.1-1

Electrical Power Distribution System Equipment

Equipment Description	Location	Seismic Cat. I	Safety Related
Isolation Power Center Bus D31 Supply Breaker to Division 4 250 VDC Standby Battery Charger	Reactor Building	Yes	Yes
Isolation Power Center Bus D31 Supply Breaker to Division 4 UPS Rectifier 4-1	Reactor Building	Yes	Yes
Isolation Power Center Bus D31 Supply Breaker to Division 4 UPS Rectifier 4-2	Reactor Building	Yes	Yes
Isolation Power Center Bus A31 Circuit Breaker from Ancillary Diesel Bus A	Reactor Building	Yes	Yes
Isolation Power Center Bus A31 Circuit Breaker from Ancillary Diesel Bus B	Reactor Building	Yes	Yes
Isolation Power Center Bus B31 Circuit Breaker from Ancillary Diesel Bus A	Reactor Building	Yes	Yes
Isolation Power Center Bus B31 Circuit Breaker from Ancillary Diesel Bus B	Reactor Building	Yes	Yes
Isolation Power Center Bus C31 Circuit Breaker from Ancillary Diesel Bus A	Reactor Building	Yes	Yes
Isolation Power Center Bus C31 Circuit Breaker from Ancillary Diesel Bus B	Reactor Building	Yes	Yes
Isolation Power Center Bus D31 Circuit Breaker from Ancillary Diesel Bus A	Reactor Building	Yes	Yes
Isolation Power Center Bus D31 Circuit Breaker from Ancillary Diesel Bus B	Reactor Building	Yes	Yes
Isolation Power Center Bus A31 Protective Relaying	Reactor Building	Yes	Yes
Isolation Power Center Bus B31 Protective Relaying	Reactor Building	Yes	Yes
Isolation Power Center Bus C31 Protective Relaying	Reactor Building	Yes	Yes

Table 2.13.1-1

Electrical Power Distribution System Equipment

Equipment Description	Location	Seismic Cat. I	Safety Related
Isolation Power Center Bus D31 Protective Relaying	Reactor Building	Yes	Yes

Table 2.13.1-2

ITAAC For The Electric Power Distribution System

Design Commitment	Inspections, Tests, Analyses	Acceptance Criteria
1. The functional arrangement of Electric Power Distribution System is as described in the Design Description of Subsection 2.13.1 and Table 2.13.1-1, and as shown on Figure 2.13.1-1.	Inspections of the as-built Electric Power Distribution System will be performed.	The as-built Electric Power Distribution System conforms to the functional arrangement as described in the design description of Subsection 2.13.1 and shown in Table 2.13.1-1 and, as shown on Figure 2.13.1-1.
2. The 480 VAC Isolation Power Center equipment identified as Seismic Category I in Table 2.13.1-1 can withstand Seismic Category I loads without loss of safety function.	i. Inspections will be performed to verify that the 480 VAC Isolation Power Center equipment identified as Seismic Category I in Table 2.13.1-1 is located in a Seismic Category I structure.	i. The Seismic Category I 480 VAC Isolation Power Center equipment identified in Table 2.13.1-1 is housed in a Seismic Category I structure.
	ii. Type tests, analyses, or a combination of type test and analyses of the Seismic Category I 480 VAC Isolation Power Center equipment identified in Table 2.13.1-1, will be performed using analytical assumptions, or under conditions which bound the Seismic Category I equipment design requirements.	ii. The Seismic Category I 480 VAC Isolation Power Center equipment identified in Table 2.13.1-1 can withstand Seismic Category I loads without loss of safety function.
	iii. Inspection and analyses will be performed to verify that the equipment identified as Seismic Category I in Table 2.13.1-2, including associated anchorage, is bound by the test or analyzed conditions.	iii. The as-built 480 VAC Isolation Power Center equipment identified in Table 2.13.1-2 including associated anchorage can withstand Seismic Category I loads without loss of safety function.

Table 2.13.1-2

ITAAC For The Electric Power Distribution System

Design Commitment	Inspections, Tests, Analyses	Acceptance Criteria
3a. Independence is provided between safety-related divisions as defined in Regulatory Guide 1.75.	Tests will be performed on the as-built safety-related 480 VAC Isolation Power Centers by providing a test signal in only one safety-related division at a time.	A test signal exists only in the as-built safety-related division under test in the 480 VAC Isolation Power Center.
3b. Physical separation and electrical isolation are provided between safety-related divisions, and between safety-related divisions and nonsafety-related equipment as defined in Regulatory Guide 1.75.	Inspection and analysis of the as-built safety-related 480 VAC Isolation Power Centers will be performed.	For the as-built safety-related 480 VAC Isolation Power Centers, physical separation and electrical isolation as defined in Regulatory Guide 1.75 exists between safety-related divisions. Physical separation and electrical isolation as defined in Regulatory Guide 1.75 exists between safety-related divisions and nonsafety-related equipment.
4. Each safety-related Isolation Power Center supplies power to safety-related loads in its respective division.	Tests will be performed using a test signal to confirm that an electrical path exists from the as-built safety-related Isolation Power Center to its divisional safety-related loads. Each test may be a single test or a series of over-lapping tests.	A test signal originating from the as-built divisional Isolation Power Center exists at the terminals of its divisional safety-related loads.
5. Isolation Power Centers and their associated loads are protected against under voltage, degraded voltage and under-frequency conditions.	Testing will be performed using real or simulated signals.	The Isolation Power Centers are protected against under voltage, degraded voltage and under-frequency conditions by applying a real or simulated signal and verifying that the as-built Isolation Power Center bus isolates from the nonsafety-related system.

Table 2.13.1-2

ITAAC For The Electric Power Distribution System

Design Commitment	Inspections, Tests, Analyses	Acceptance Criteria
6a. The Electric Power Distribution System provides the capability for distributing nonsafety-related AC power from onsite sources to their designated RTNSS loads.	Tests will be performed using a test signal to confirm that an electrical path exists for each RTNSS load from its associated as-built bus. Each test may be a single test or a series of over-lapping tests.	A test signal originating from the as-built bus exists at the terminals of each associated RTNSS load.
6b. The Electric Power Distribution System provides a PIP bus under voltage signal to trip the PIP bus normal and alternate preferred power supply breakers.	Testing will be performed using real or simulated PIP bus under voltage signals.	The as-built PIP bus normal and alternate preferred power supply breakers trip after receiving a real or simulated PIP bus under voltage signal.
7. (Deleted)		
8. (Deleted)		
9. Equipment within the onsite portion of the Preferred Power Supply (PPS) is rated to supply necessary load requirements, including power, voltage, and frequency, during design basis operating modes.	Analysis of the as-built onsite portion of the PPS will be performed to determine load requirements during design basis operating modes. This analysis will, in part, specify required power, voltage, and frequency at the interface between the onsite and offsite portions of the PPS in order to provide adequate power, voltage, and frequency to the safety-related Isolation Power Center buses to support safety-related load operation.	The as-built equipment within the onsite portion of the PPS, as determined by its ratings, exceeds the analyzed load requirements, including power, voltage, and frequency, during design basis operating modes.

Table 2.13.1-2

ITAAC For The Electric Power Distribution System

Design Commitment	Inspections, Tests, Analyses	Acceptance Criteria
10. Equipment within the onsite portion of the PPS is rated to interrupt analyzed fault currents, including the fault current contribution from the offsite portion of the PPS.	Analysis of the as-built onsite portion of the PPS will be performed to determine the fault current interrupting requirements during design basis operating modes including the fault current contribution from the offsite portion of the PPS.	The as-built equipment within the onsite portion of the PPS, as determined by its ratings, exceeds the analyzed fault currents, including the fault current contribution from the offsite portion of the PPS.
11a. The onsite portions of the normal preferred power supply circuits are physically separate from the onsite portions of the alternate preferred power supply circuits from the Unit Auxiliary Transformer (UAT) and Reserve Auxiliary Transformer (RAT) to the PIP bus incoming line breakers.	Inspections of the as-built onsite normal preferred power supply circuits and alternate preferred power supply circuits will be performed.	For the as-built onsite portion of the PPS: • • The non-segregated phase bus ducts provided for the electrical interconnection between the RAT and 6.9 kV switchgear buses are physically separated from the bus ducts provided for the interconnection of the UAT and the switchgear by distance or physical barriers so as to minimize, to the extent practical, the likelihood of their simultaneous failure under design basis conditions in accordance with IEEE-384.
11b. The onsite portions of the normal preferred power supply circuits are electrically independent from the onsite portions of the alternate preferred power supply circuits from the UAT and RAT to the PIP bus incoming line breakers.	Tests of the as-built onsite portions of the PPS normal preferred and alternate preferred power supply circuits will be conducted by providing a test signal in only one preferred power circuit at a time.	A test signal exists in only the circuit under test.

Table 2.13.1-2

ITAAC For The Electric Power Distribution System

Design Commitment	Inspections, Tests, Analyses	Acceptance Criteria
11c. The onsite portions of the normal preferred power supply circuit breaker control power, instrumentation, and control circuits are electrically independent from the alternate preferred power supply circuit breaker control power, instrumentation, and control circuits from the UAT and RAT to the PIP bus incoming line breakers.	Tests of the as-built onsite portions of the normal preferred and alternate preferred power supply circuit breaker control power, instrumentation, and control circuits will be conducted by providing a test signal in only one circuit at a time.	A test signal exists in only the circuit under test.
11d. The onsite portions of the normal preferred power supply circuit breaker control power, instrumentation, and control circuits are physically separated from the alternate preferred power supply circuit breaker control power, instrumentation, and control circuits from the UAT and RAT to the PIP bus incoming line breakers.	Inspections of the as-built onsite portions of the normal preferred and alternate preferred power supply circuit breaker control power, instrumentation, and control circuits will be performed.	The as-built onsite portions of the normal preferred power supply circuit breaker control power, instrumentation, and control circuits are physically separated from the alternate preferred power supply circuit breaker control power, instrumentation, and control circuits by distance or physical barriers so as to minimize to the extent practical the likelihood of their simultaneous failure under design basis conditions as defined in IEEE-384.
11e. The UAT and RAT are physically separated to minimize the likelihood of their simultaneous failure under design basis conditions to the extent practical.	Inspection and analysis of the as-built UAT and RAT physical separation will be performed.	The UAT and RAT are physically separated by physical barriers, or are separated by distance, to minimize the likelihood of their simultaneous failure under design basis conditions to the extent practical, according to RG 1.189 separation criteria.

Table 2.13.1-2

ITAAC For The Electric Power Distribution System

Design Commitment	Inspections, Tests, Analyses	Acceptance Criteria
12a. The normal power supply circuits are physically separate from the alternate power supply circuits from the PIP buses to the Isolation Power Center bus incoming line breakers.	Inspections of the as-built normal power supply circuits and alternate power supply circuits will be performed.	The normal power supply circuits are physically separate from the alternate power supply circuits by distance or physical barriers so as to minimize to the extent practical the likelihood of their simultaneous failure under design basis conditions as defined in IEEE-384.
12b. The normal power supply circuits are electrically independent from the alternate power supply circuits from the PIP buses to the Isolation Power Center bus incoming line breakers.	Tests of the as-built normal and alternate power supply circuits will be conducted by providing a test signal in only one power circuit at a time.	A test signal exists in only the circuit under test.
12c. The normal power supply circuit breaker control power, instrumentation, and control circuits are electrically independent from the alternate power supply circuit breaker control power, instrumentation, and control circuits from the PIP buses to the Isolation Power Center bus incoming line breakers.	Tests of the as-built normal and alternate power supply circuit breaker control power, instrumentation, and control circuits will be conducted by providing a test signal in only one circuit at a time.	A test signal exists in only the circuit under test.

Table 2.13.1-2

ITAAC For The Electric Power Distribution System

Design Commitment	Inspections, Tests, Analyses	Acceptance Criteria
12d. The onsite portions of the normal power supply circuit breaker control power, instrumentation, and control circuits are physically separated from the alternate power supply circuit breaker control power, instrumentation, and control circuits from the PIP buses to the Isolation Power Center bus incoming line breakers.	Inspections of the as-built normal and alternate power supply circuit breaker control power, instrumentation, and control circuits will be performed.	The as-built normal power supply circuit breaker control power, instrumentation, and control circuits are physically separated from the alternate power supply circuit breaker control power, instrumentation, and control circuits by distance or physical barriers so as to minimize to the extent practical the likelihood of their simultaneous failure under design basis conditions as defined in IEEE-384.
13. Interrupting devices for the Electric Power Distribution Preferred Power System are coordinated so as to isolate faulted equipment or circuits of the Plant Investment Protection Buses from the Preferred Power System, prevent damage to equipment, protect personnel, minimize system disturbances, and maintain continuity of the Preferred Power Supply System from the PIP buses to all safety-related loads and designated RTNSS B and C loads.	Analysis will be performed for all voltage levels to ensure that interrupting devices are properly coordinated.	Interrupting devices at all voltage levels are properly coordinated and the interrupter closest to a fault opens before other devices and isolate only the faulted equipment and or circuit.

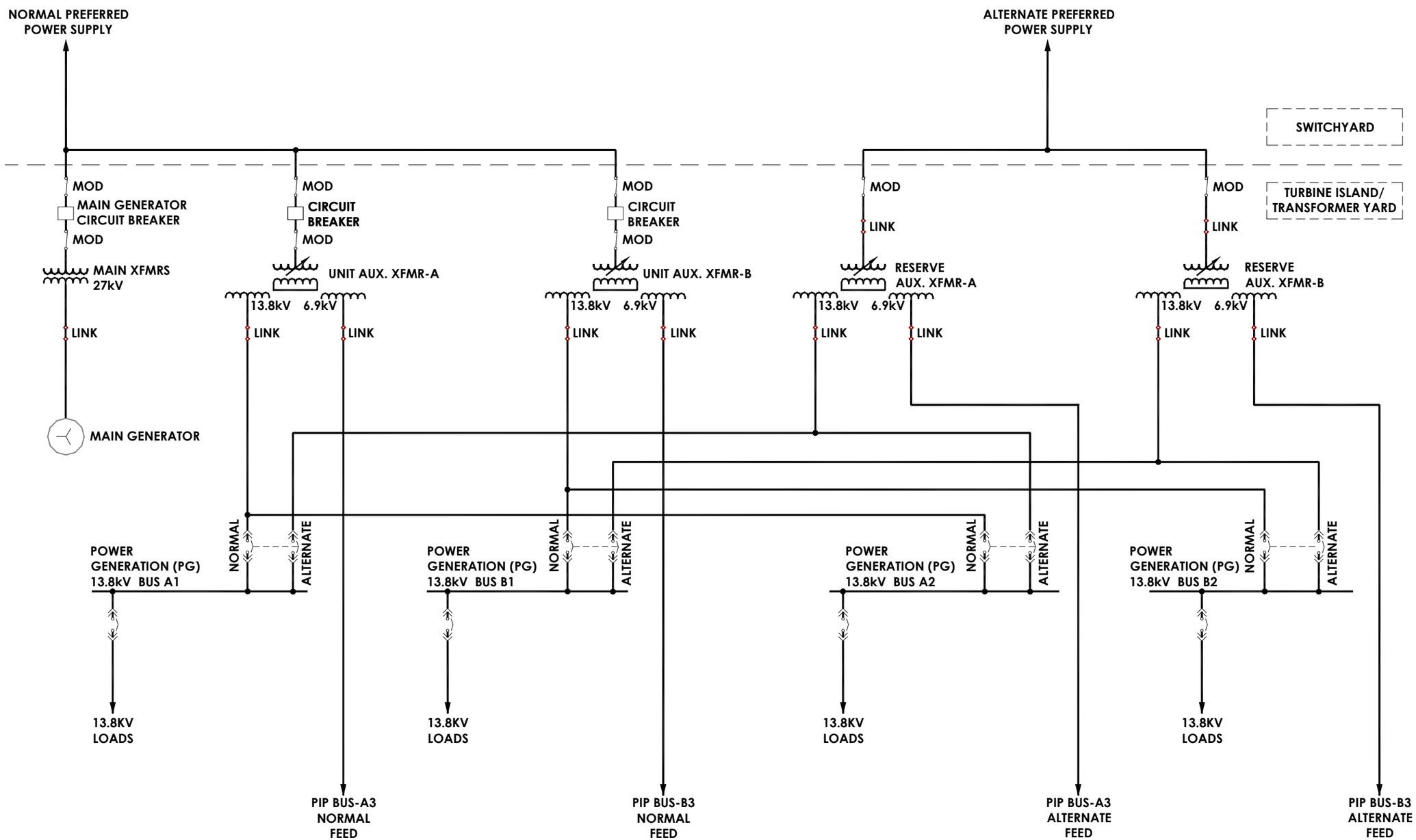

Figure 2.13.1-1 Sh 1.
Electric Power Distribution System Functional Arrangement

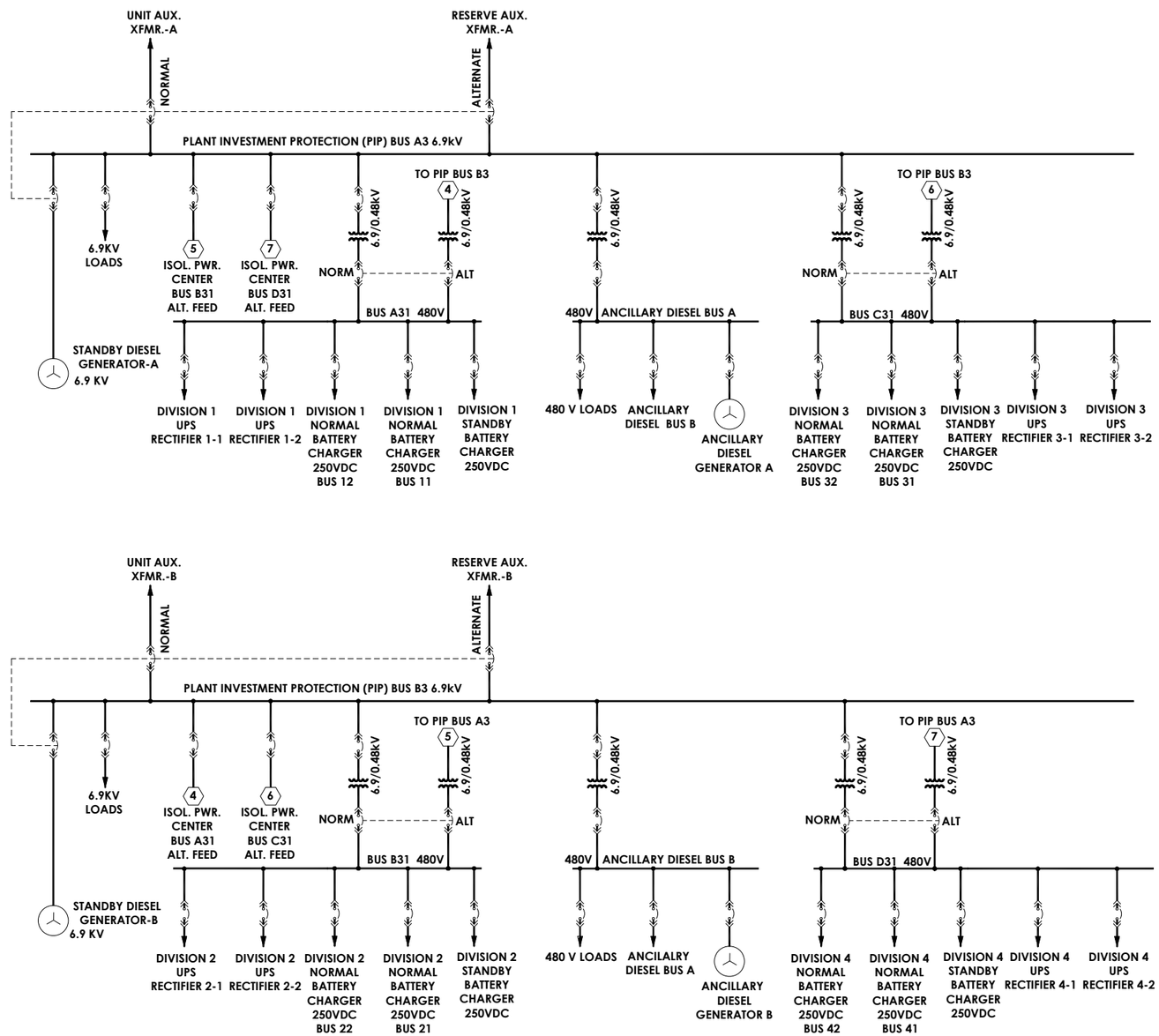

Figure 2.13.1-1 Sh 2.
Electric Power Distribution System Functional Arrangement

2.13.2 (Deleted)

2.13.3 Direct Current Power Supply

Design Description

Completely independent safety-related and nonsafety-related DC power systems are provided.

Nonsafety-related DC power systems are not part of the plant safety-related design basis, and are independent and separate from the safety-related DC power supplies.

The 250 V Safety-Related DC systems provide four divisions of power to operate safety-related loads for at least 72 hours following a design basis accident. The 250V safety-related DC systems are also adequately sized for the station blackout conditions.

The Direct Current Power Supply alarms, displays, controls, and status indications in the main control room are addressed in Section 3.3.

Environmental qualification of the 250 V safety-related DC systems is addressed in Section 3.8.

(1) The functional arrangement of the 250 V safety-related DC systems is as described in Subsection 2.13.3 Design Description and Table 2.13.3-1 and as shown on Figure 2.13.3-1.

(2) The functional arrangement of the 125 V and 250V nonsafety-related DC systems is as shown on Figure 2.13.3-2 and as described in Subsection 2.13.3.

(3) Two 250 V safety-related batteries in each division are together sized to supply their design loads, at the end of installed life, for a minimum of 72 hours without recharging.

(4) The 250 V safety-related DC systems equipment identified as Seismic Category I in Table 2.13.3-1 can withstand Seismic Category I loads without loss of safety function.

(5) The 250 V safety-related DC systems provide four independent and redundant safety-related divisions.

(6) Physical separation is provided between safety-related divisions, and between safety-related divisions and nonsafety-related equipment as defined in Regulatory Guide 1.75.

(7) Each battery charger associated with each 250 VDC safety-related battery is capable of restoring its battery after a bounding design basis event discharge to a state that the battery can perform its design basis function for subsequent postulated operational and design basis functions, while at the same time supplying the largest combined demands associated with the battery, within the time stated in the design basis, consistent with the requirement given in IEEE 308.

(8) The 250 V safety-related DC battery and battery charger circuit breakers, and DC distribution panels and their circuit breakers and fuses, are sized to supply their load requirements.

(9) The battery chargers are designed to prevent their AC source from becoming a load on the 250 VDC safety-related batteries when the AC power source is de-energized or has degraded voltage.

(10) (Deleted)

(11) (Deleted)

(12) Electrical cables for the safety-related 250 VDC system are rated to withstand fault current for the time required to clear the fault from their power source.

(13) Protective devices for the safety-related 250 VDC system are rated to interrupt analyzed fault currents and are coordinated to only trip the protective device closest to the fault.

(14) Raceway for safety-related 250 VDC system circuits are sized in accordance with design requirements.

Inspections, Tests, Analyses, and Acceptance Criteria

Table 2.13.3-3 provides a definition of the inspections, tests, and analyses, together with associated acceptance criteria for the Direct Current Power Supply.

Table 2.13.3-1

Direct Current Power Supply System Equipment

Equipment Description	Location	Seismic Cat. I	Safety Related
Division 1 Bus 11 250 VDC Battery	Reactor Building	Yes	Yes
Division 1 Bus 12 250 VDC Battery	Reactor Building	Yes	Yes
Division 2 Bus 21 250 VDC Battery	Reactor Building	Yes	Yes
Division 2 Bus 22 250 VDC Battery	Reactor Building	Yes	Yes
Division 3 Bus 31 250 VDC Battery	Reactor Building	Yes	Yes
Division 3 Bus 32 250 VDC Battery	Reactor Building	Yes	Yes
Division 4 Bus 41 250 VDC Battery	Reactor Building	Yes	Yes
Division 4 Bus 42 250 VDC Battery	Reactor Building	Yes	Yes
Division 1 Bus 11 250 VDC Normal Battery Charger	Reactor Building	Yes	Yes
Division 1 Bus 12 250 VDC Normal Battery Charger	Reactor Building	Yes	Yes
Division 1 250 VDC Standby Battery Charger	Reactor Building	Yes	Yes
Division 2 Bus 21 250 VDC Normal Battery Charger	Reactor Building	Yes	Yes
Division 2 Bus 22 250 VDC Normal Battery Charger	Reactor Building	Yes	Yes
Division 2 250 VDC Standby Battery Charger	Reactor Building	Yes	Yes

Table 2.13.3-1

Direct Current Power Supply System Equipment

Equipment Description	Location	Seismic Cat. I	Safety Related
Division 3 Bus 31 250 VDC Normal Battery Charger	Reactor Building	Yes	Yes
Division 3 Bus 32 250 VDC Normal Battery Charger	Reactor Building	Yes	Yes
Division 3 250 VDC Standby Battery Charger	Reactor Building	Yes	Yes
Division 4 Bus 41 250 VDC Normal Battery Charger	Reactor Building	Yes	Yes
Division 4 Bus 42 250 VDC Normal Battery Charger	Reactor Building	Yes	Yes
Division 4 250 VDC Standby Battery Charger	Reactor Building	Yes	Yes
Division 1 Bus 11 250 VDC Power Center	Reactor Building	Yes	Yes
Division 1 Bus 12 250 VDC Power Center	Reactor Building	Yes	Yes
Division 2 Bus 21 250 VDC Power Center	Reactor Building	Yes	Yes
Division 2 Bus 22 250 VDC Power Center	Reactor Building	Yes	Yes
Division 3 Bus 31 250 VDC Power Center	Reactor Building	Yes	Yes
Division 3 Bus 32 250 VDC Power Center	Reactor Building	Yes	Yes
Division 4 Bus 41 250 VDC Power Center	Reactor Building	Yes	Yes
Division 4 Bus 42 250 VDC Power Center	Reactor Building	Yes	Yes
Division 1 Bus 11 250 VDC Transfer Switch Box	Reactor Building	Yes	Yes

Table 2.13.3-1

Direct Current Power Supply System Equipment

Equipment Description	Location	Seismic Cat. I	Safety Related
Division 1 Bus 12 250 VDC Transfer Switch Box	Reactor Building	Yes	Yes
Division 2 Bus 21 250 VDC Transfer Switch Box	Reactor Building	Yes	Yes
Division 2 Bus 22 250 VDC Transfer Switch Box	Reactor Building	Yes	Yes
Division 3 Bus 31 250 VDC Transfer Switch Box	Reactor Building	Yes	Yes
Division 3 Bus 32 250 VDC Transfer Switch Box	Reactor Building	Yes	Yes
Division 4 Bus 41 250 VDC Transfer Switch Box	Reactor Building	Yes	Yes
Division 4 Bus 42 250 VDC Transfer Switch Box	Reactor Building	Yes	Yes

Table 2.13.3-2

Direct Current Power Supply Equipment Displays/Status Indication

Equipment Description	Display/Status Indication
Division 1 Bus 11 250 VDC Battery	Yes
Division 1 Bus 12 250 VDC Battery	Yes
Division 2 Bus 21 250 VDC Battery	Yes
Division 2 Bus 22 250 VDC Battery	Yes
Division 3 Bus 31 250 VDC Battery	Yes
Division 3 Bus 32 250 VDC Battery	Yes
Division 4 Bus 41 250 VDC Battery	Yes
Division 4 bus 42 250 VDC Battery	Yes
Division 1 Bus 11 250 VDC Normal Battery Charger	Yes
Division 1 Bus 12 250 VDC Normal Battery Charger	Yes
Division 1 250 VDC Standby Battery Charger	Yes
Division 2 Bus 21 250 VDC Normal Battery Charger	Yes
Division 2 Bus 22 250 VDC Normal Battery Charger	Yes
Division 2 250 VDC Standby Battery Charger	Yes
Division 3 Bus 31 250 VDC Normal Battery Charger	Yes
Division 3 Bus 32 250 VDC Normal Battery Charger	Yes
Division 3 250 VDC Standby Battery Charger	Yes
Division 4 Bus 41 250 VDC Normal Battery Charger	Yes

Table 2.13.3-2

Direct Current Power Supply Equipment Displays/Status Indication

Equipment Description	Display/Status Indication
Division 4 Bus 42 250 VDC Normal Battery Charger	Yes
Division 4 250 VDC Standby Battery Charger	Yes

Table 2.13.3-3

ITAAC For The Direct Current Power Supply

Design Commitment	Inspections, Tests, Analyses	Acceptance Criteria
1. The functional arrangement of the 250 V safety-related DC systems is as described in Subsection 2.13.3 Design Description and Table 2.13-1 and as shown on Figure 2.13.3-1.	Inspections of the as-built 250 V safety-related DC systems will be performed.	The as-built 250 V safety-related DC systems conform with the functional arrangement as shown in Figure 2.13.3-1 and as described in Subsection 2.13.3 and component locations are as shown in Table 2.13.3-1.
2. The functional arrangement of the 125 V and 250V nonsafety-related DC systems is as shown on Figure 2.13.3-2 and as described in Subsection 2.13.3.	Inspections of the as-built 125 V and 250 V nonsafety-related DC systems will be performed.	The as-built 125 V and 250 V nonsafety-related DC systems conform with the functional arrangement as shown in Figure 2.13.3-2 and as described in Subsection 2.13.3
3. Two 250V safety-related batteries in each division are together sized to supply their design loads, at the end of installed life, for a minimum of 72 hours without recharging.	i. Analyses for the as-built safety-related batteries to determine battery capacities will be performed based on the design duty cycle for each battery. ii. Tests of each as-built safety-related battery will be conducted by simulating loads which envelope the analyzed battery design duty cycle.	i. The as-built batteries in each division together have the capacity, as determined by the vendor performance specification, to supply their rated constant current for a minimum of 72 hours without recharging. ii. The capacity of each as-built safety-related battery equals or exceeds the analyzed battery design duty cycle capacity.

Table 2.13.3-3

ITAAC For The Direct Current Power Supply

Design Commitment	Inspections, Tests, Analyses	Acceptance Criteria
4. The 250 V safety-related DC systems equipment identified as Seismic Category I in Table 2.13.3-1 can withstand Seismic Category I loads without loss of safety function.	i. Inspections will be performed to verify that the 250V DC system equipment identified in Table 2.13.3-1 is located in a Seismic Category I structure.	i. The Seismic Category I 250V DC system equipment is located in a Seismic Category I structure.
	ii. Type test, analyses, or a combination of type test and analyses of the 250V DC systems equipment identified in Table 2.13.3-1 as Seismic Category I will be performed using analytical assumption, or under conditions which bound the Seismic Category I design requirements.	ii. The Seismic Category I 250V DC system equipment can withstand Seismic Category I loads without loss of safety function.
	iii. Inspections and analyses will be performed to verify that the as-built 250V DC systems equipment, including anchorage, identified as Seismic Category I in Table 2.13.3-1 are seismically bounded by the tested or analyzed conditions.	iii. The as-built 250V DC system equipment, including anchorage, identified as Seismic Category I in Table 2.13.1-1 can withstand Seismic Category I loads without loss of safety function.
5. The 250 V safety-related DC systems provide four independent and redundant safety-related divisions.	Tests will be performed on the as-built 250 V safety-related DC systems by providing a test signal in only one safety-related division at a time.	A test signal exists only in the as-built safety-related division under test in the 250 V safety-related DC systems; and a test signal originating from the as-built divisional safety-related 250 VDC distribution panel exists at the terminals of its divisional safety-related loads.

Table 2.13.3-3

ITAAC For The Direct Current Power Supply

Design Commitment	Inspections, Tests, Analyses	Acceptance Criteria
6. Physical Separation is provided between safety-related divisions, and between safety-related divisions and nonsafety-related equipment as defined in Regulatory Guide 1.75.	Inspection and analysis of the as-built 250 V safety-related DC systems will be performed.	In the as-built 250 V safety-related DC systems, physical separation as defined in Regulatory Guide 1.75 exists between safety–related divisions. Physical separation as defined in Regulatory Guide 1.75 exists between safety-related divisions and nonsafety-related equipment.
7. Each battery charger associated with each 250 VDC safety-related battery is capable of restoring its battery after a bounding design basis event discharge to a state that the battery can perform its design basis function for subsequent postulated operational and design basis functions, while at the same time supplying the largest combined demands associated with the battery, within the time stated in the design basis, consistent with the requirement given in IEEE 308.	Testing of each 250 VDC safety-related battery charger will be performed.	Following a bounding design basis event discharge, the battery charger is capable of restoring its associated battery to a state that the battery can perform its design basis function for subsequent postulated operational and design basis functions while at the same time supplying the largest combined demands associated with the battery, within the time stated in the design basis, consistent with the requirement given in IEEE 308.

Table 2.13.3-3

ITAAC For The Direct Current Power Supply

Design Commitment	Inspections, Tests, Analyses	Acceptance Criteria
8. The 250 V safety-related DC battery and battery charger circuit breakers, and DC distribution panels and their circuit breakers and fuses, are sized to supply their load requirements.	Analyses of the as-built 250V safety-related DC electrical distribution system will be performed to determine the capacities of the battery and battery charger circuit breakers, and DC distribution panels and their circuit breakers and fuses.	The capacities of safety-related battery and battery charger circuit breakers, and DC distribution panels and their circuit breakers and fuses, as determined by their nameplate ratings, exceed their analyzed load and DC interrupting current requirements.
9. The battery chargers are designed to prevent their AC source from becoming a load on the 250 VDC safety-related batteries when the AC power source is de-energized or has degraded voltage.	Testing of each 250 VDC safety-related battery charger will be performed to demonstrate that there is no power feedback from a loss of AC input power.	The 250 VDC safety-related battery chargers prevent the AC input source from becoming a load on the 250 VDC safety-related batteries during a loss of AC power condition.
10. (Deleted)		
11. (Deleted)		

Table 2.13.3-3

ITAAC For The Direct Current Power Supply

Design Commitment	Inspections, Tests, Analyses	Acceptance Criteria
12. Electrical cables for the safety-related 250 VDC system are rated to withstand fault current for the time required to clear the fault from their power source.	Analyses of the as-built safety-related 250 VDC system will be performed to determine possible fault currents.	For the as-built safety-related 250 VDC system, electrical cables will withstand the analyzed fault currents, as determined by manufacturer's ratings, for the time required to clear the fault from its power source.
13. Protective devices for the safety-related 250 VDC system are rated to interrupt analyzed fault currents and are coordinated to only trip the protective device closest to the fault.	Analyses of the as-built safety-related 250 VDC system will be performed to determine possible fault currents and the required size of protective devices to ensure that they are coordinated to only trip the protective device closest to the fault.	For the as-built safety-related 250 VDC system, that the protective devices for the safety-related 250 VDC system loads are sized to only trip the protective device closest to the fault.
14. Raceway for safety-related 250 VDC system circuits are sized in accordance with design requirements.	Analyses of the as-built safety-related 250 VDC system will be performed to determine required raceway sizing.	For the as-built safety-related 250 VDC system, raceway sizing is in accordance with design requirements and raceway loading is within that assumed in the electrical analyses.

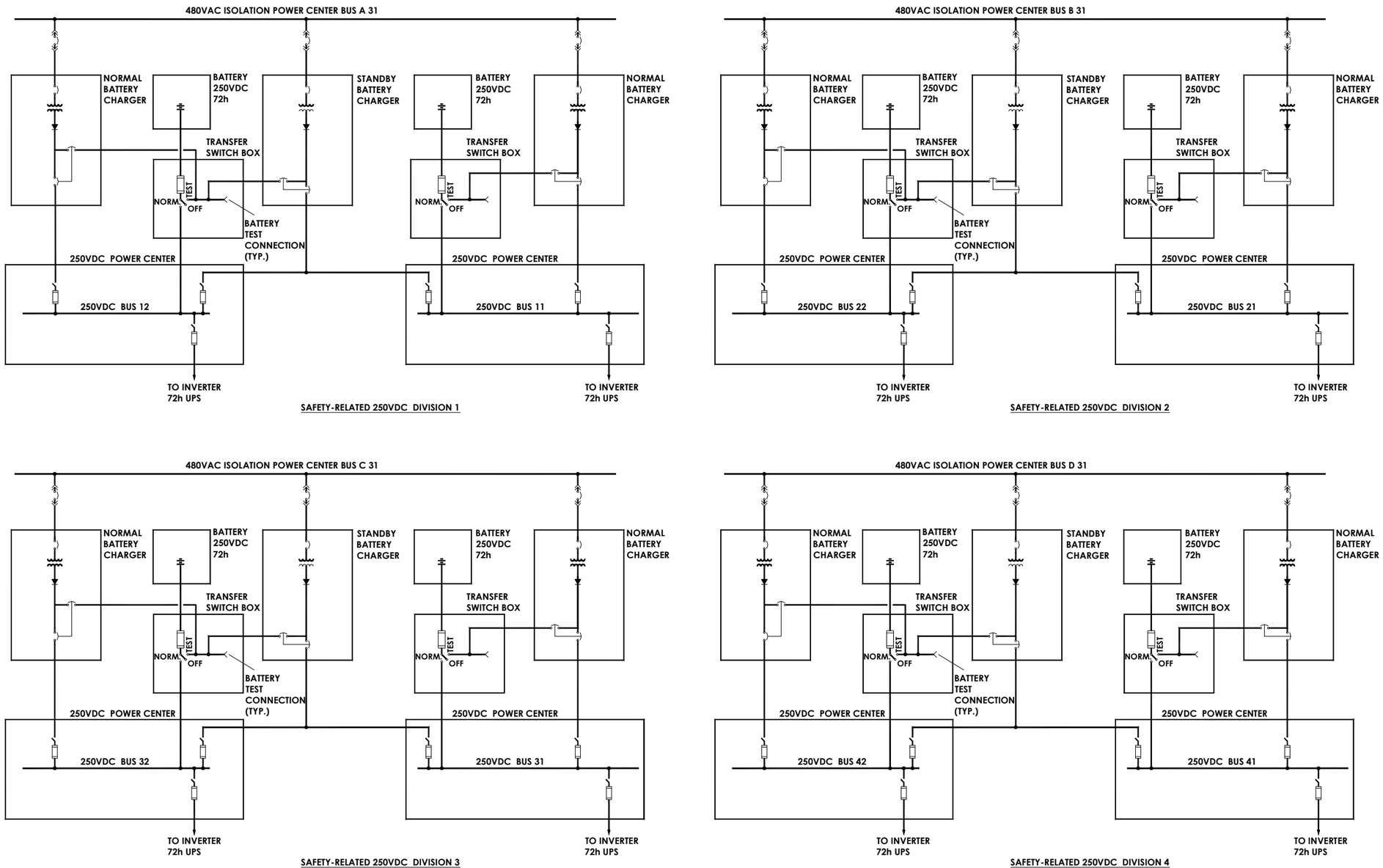

Figure 2.13.3-1. Safety-Related 250 VDC System Functional Arrangement

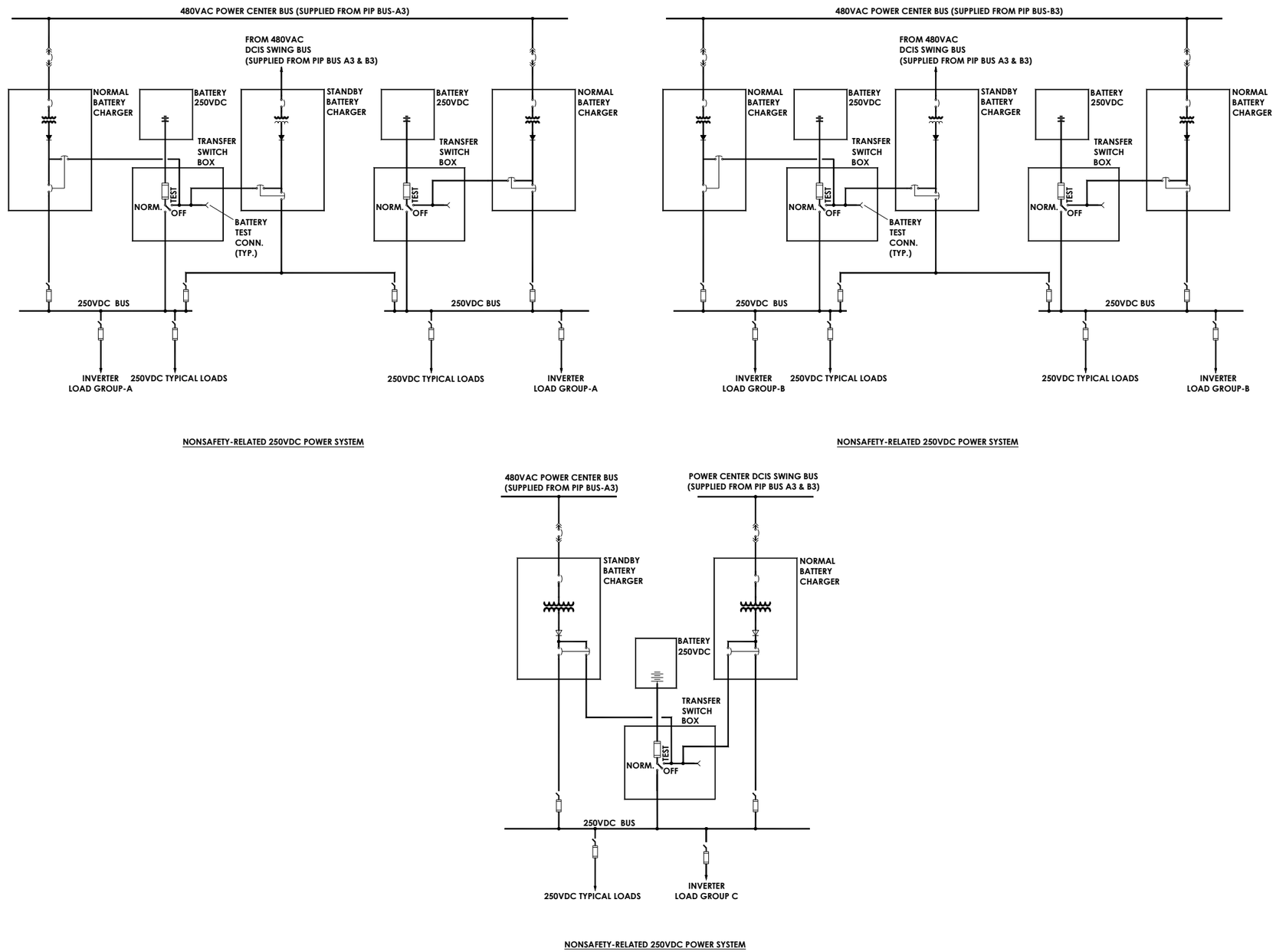

Figure 2.13.3-2 Sh 1. Nonsafety-Related 250 VDC System Functional Arrangement

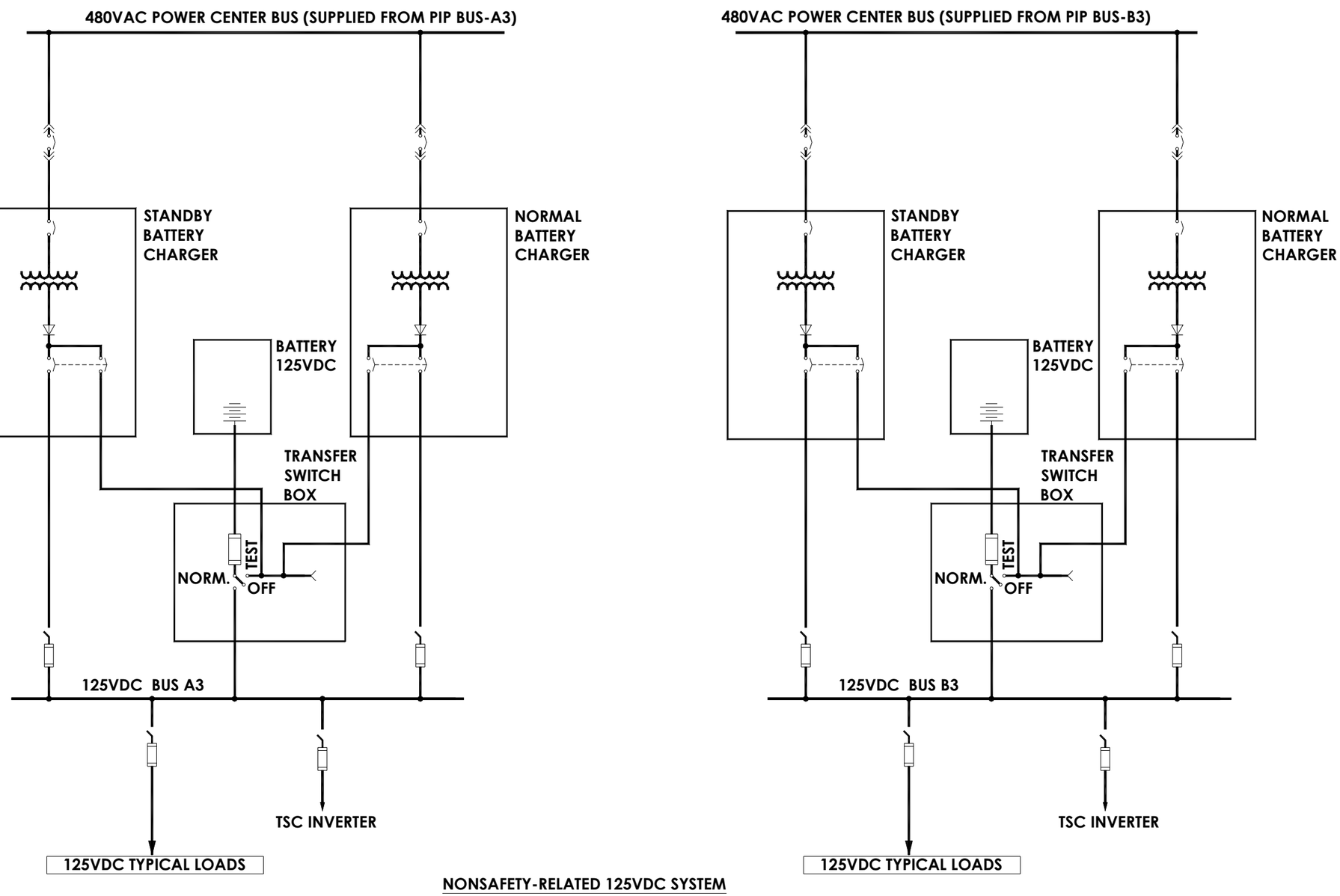

Figure 2.13.3-2 Sh 2. Nonsafety-Related 125 VDC System Functional Arrangement

2.13.4 Standby Onsite AC Power Supply

Design Description

There are two systems capable of supplying onsite AC power. They are the standby diesel generators (SDG) and the ancillary diesel generators (ADG).

Two independent nonsafety-related SDG, including their support systems, provide separate sources of onsite power for the nonsafety-related Plant Investment Protection (PIP) load groups when the normal and alternate preferred 6.9kV power supplies are not available. The nonsafety-related standby diesel generators have a Regulatory Treatment of Non-Safety Systems (RTNSS) function to provide power to the PIP buses that supply RTNSS loads.

Two nonsafety-related, seismic category II ADG, including their support systems, provide 480 VAC power for post accident support loads when the normal and alternate preferred 6.9 kV power supplies and the SDG are not available. The nonsafety-related ancillary diesel generators have a RTNSS function to provide power to the ancillary diesel buses that supply RTNSS loads.

The Standby Onsite Power Supply System alarms, displays, controls, and status indications in the main control room are addressed by Section 3.3.

The Ancillary Diesel Onsite Power Supply System alarms, displays, controls, and status indications are addressed by Section 3.3.

(1) The functional arrangement of Standby Onsite Power System is as described in Subsection 2.13.4 and in Table 2.13.4-1.

(2) a. Upon receipt of an under voltage signal from the Electric Power Distribution System, the standby diesel generator starts and achieves rated speed and voltage and sequences its designed loads while maintaining voltage and frequency within design limits.

b. Each standby diesel generator is capable of operating at its nameplate rated load and is sized to accommodate its expected loads.

c. Each standby diesel generator fuel oil storage tank contains adequate fuel oil capacity for seven days of standby diesel generator operation based on expected SDG load.

d. Each of the standby diesel generator fuel oil transfer pumps (two pumps per engine) starts automatically and transfer fuel oil from the standby fuel oil storage tank to the standby diesel generator day tank at a rate greater than or equal to the usage rate of the standby diesel generator.

e. Each of the standby diesel generator starting air receivers (two receivers per engine) is capable of starting the engine at its low pressure alarm setpoint.

f. Each of the standby diesel generator jacket cooling water systems controls the flow of water to maintain required water temperature.

g. Each standby diesel generator has instrumentation provided to monitor lube oil temperature, pressure and sump level, ensuring proper operation of the system.

h. Each standby diesel generator is provided with a separate intake and exhaust system.

i. Each standby diesel generator can be remotely operated from the MCR.

(3) (Deleted)

(4) The functional arrangement of the Ancillary Diesel Onsite Power Supply System is as described in the Subsection 2.13.4 and in Table 2.13.4-1.

(5) a. Upon receipt of an under voltage signal from the ancillary diesel 480 VAC bus, the ancillary diesel generator starts, achieves rated speed and voltage, and supplies power to the ancillary diesel bus.

b. Upon receipt of a low ancillary diesel room temperature signal, the ancillary diesel generator starts and achieves rated speed and voltage, and supplies power to the ancillary diesel bus.

c. Each ancillary diesel generator is capable of operating at its nameplate rated load and is sized to accommodate its expected loads.

d. Each ancillary diesel generator fuel oil storage tank contains adequate fuel oil capacity for seven days of ancillary diesel generator operation based on expected ADG load.

e. Each of the ancillary diesel generator fuel oil transfer pumps start automatically and transfer fuel oil from the ancillary fuel oil storage tank to the ancillary diesel generator day tank at a rate greater than or equal to the usage rate of the ancillary diesel generator.

(6) (Deleted)

(7) Each ancillary diesel generator and its associated auxiliaries, buses, fuel tanks, and fuel oil transfer pumps conform to Seismic Category II requirements.

Inspections, Tests, Analyses, and Acceptance Criteria

Table 2.13.4-2 provides a definition of the inspections, tests, and analyses, together with associated acceptance criteria for the Standby Onsite Power Supply System and the Ancillary Diesel Onsite Power Supply System.

Table 2.13.4-1

Equipment Location

Equipment Description	Location
Standby Diesel Generator A	Electrical Building
Standby Diesel Generator B	Electrical Building
Ancillary Diesel Generator A	Ancillary Diesel Building
Ancillary Diesel Generator B	Ancillary Diesel Building

Table 2.13.4-2

ITAAC For The Standby On-site AC Power Supply

Design Commitment	Inspections, Tests, Analyses	Acceptance Criteria
1. The functional arrangement of the Standby Onsite Power Supply is as described in Subsection 2.13.4 and in Table 2.13.4-1.	Inspections of the as-built system will be conducted.	The as-built Standby Onsite Power Supply system conform with the functional arrangement as described in the Design Description of Subsection 2.13.4 and Table 2.13.4-1.
2a. Upon receipt of an under voltage signal from the Electric Power Distribution System, the standby diesel generator starts and achieves rated speed and voltage and sequences its designed loads while maintaining voltage and frequency within design limits.	Tests of the as-built Standby Onsite Power Supply system will be conducted by providing a real or simulated under voltage signal to start the standby diesel generators. Subsequently generated signals will start load sequencing.	The as-built standby diesel generator starts upon receipt of a real or simulated under voltage signal on its associated PIP bus, achieves rated speed and voltage, and sequences its designed loads while maintaining voltage and frequency within design limits.
2b. Each standby diesel generator is capable of operating at its nameplate rated load and is sized to accommodate its expected loads.	Testing will be performed to demonstrate that each as-built standby diesel generator will operate between rated and maximum nameplate load, and nameplate power factor for a time period required to reach engine temperature equilibrium. Analysis will be performed to demonstrate that the expected loads are within the nameplate rated load.	Each as-built standby diesel generator provides power at generator terminal rated voltage and frequency when operated at rated load, and expected loads are within the rated nameplate load.
2c. Each standby diesel generator fuel oil storage tank contains adequate fuel oil capacity for seven days of standby diesel generator operation based on expected SDG load.	The as-built standby fuel oil storage tank capacity will be calculated based on expected SDG load.	The as-built standby fuel oil storage tank capacity is adequate to supply seven days of fuel oil to the standby diesel generator under continuous operation based on expected SDG load.

Table 2.13.4-2

ITAAC For The Standby On-site AC Power Supply

Design Commitment	Inspections, Tests, Analyses	Acceptance Criteria
2d. Each of the standby diesel generator fuel oil transfer pumps (two pumps per engine) starts automatically and transfers fuel oil from the standby fuel oil storage tank to the standby diesel generator day tank at a rate greater than or equal to the usage rate of the standby diesel generator.	Testing will be performed to demonstrate that each as-built fuel oil transfer pump starts automatically and transfers fuel oil from the standby fuel oil storage tank to the standby diesel generator day tank at a rate greater than or equal to the usage rate of the standby diesel generator when operating between rated and maximum nameplate load.	Each as-built fuel oil transfer pump starts automatically and transfers fuel oil from the standby fuel oil storage tank to the standby diesel generator day tank at a rate greater than or equal to the usage rate of the standby diesel generator when running operating between rated and maximum nameplate load.
2e. Each of the standby diesel generator starting air receivers (two receivers per engine) is capable of starting the engine at its low pressure alarm setpoint.	Testing will be performed for each as-built starting air receiver.	Each as-built starting air receiver is capable of starting the engine at its low pressure alarm setpoint.
2f. Each of the standby diesel generator jacket cooling water systems controls the flow of water to maintain required water temperature.	Testing of standby diesel generator jacket cooling water system will be performed to demonstrate flow of water to maintain required water temperature.	The standby diesel generator jacket cooling water system demonstrates flow of water to maintain required water temperature.
2g. Each standby diesel generator has instrumentation provided to monitor lube oil temperature, pressure and sump level, ensuring proper operation of the system.	Inspection and testing will be performed to demonstrate that lube oil temperature, pressure and sump level instrumentation is provided and monitors operation of the system.	Each standby diesel generator has instrumentation provided to monitor lube oil temperature, pressure and sump level, ensuring proper operation of the system.
2h. Each standby diesel generator is provided with a separate intake and exhaust system.	Inspection of the as-built intake and exhaust system will be conducted.	Each as-built DG is provided with a separate intake and exhaust system.

Table 2.13.4-2

ITAAC For The Standby On-site AC Power Supply

Design Commitment	Inspections, Tests, Analyses	Acceptance Criteria
2i. Each standby diesel generator can be remotely operated from the MCR.	Each standby diesel generator will be started and stopped using manually initiated signals from the MCR.	Each standby diesel generator starts and stops when manually initiated signals are sent from the MCR.
3. (Deleted)		
4. The functional arrangement of the Ancillary Diesel Onsite Power Supply System is as described in Subsection 2.13.4 and in Table 2.13.4-2.	Inspections of the as-built system will be conducted.	The as-built Ancillary Diesel Onsite Power Supply System conforms to the functional arrangement as described in Subsection 2.13.4 and Table 2.13.4-2.
5a. Upon receipt of an under voltage signal from the ancillary diesel 480 VAC bus, the ancillary diesel generator starts, achieves rated speed and voltage, and supplies power to the ancillary diesel bus.	Tests of the as-built Ancillary Diesel Onsite Power Supply System will be conducted by providing a real or simulated under voltage signal to start the ancillary diesel generators.	The as-built ancillary diesel generator starts upon receipt of a real or simulated under voltage signal on its associated bus, achieves rated speed and voltage, and supplies power to the ancillary diesel bus.
5b. Upon receipt of a low ancillary diesel room temperature signal, the ancillary diesel generator starts and achieves rated speed and voltage and supplies power to the ancillary diesel bus.	Tests of the as-built Ancillary Diesel Onsite Power Supply System will be conducted by providing a real or simulated low ancillary diesel room temperature signal to start the ancillary diesel generators.	The as-built ancillary diesel generator starts upon receipt of a real or simulated low ancillary diesel room temperature signal, achieves rated speed and voltage, and supplies power to the ancillary diesel bus.

Table 2.13.4-2

ITAAC For The Standby On-site AC Power Supply

Design Commitment	Inspections, Tests, Analyses	Acceptance Criteria
5c. Each ancillary diesel generator is capable of operating at its nameplate rated load and is sized to accommodate its expected loads.	Each as-built ancillary diesel generator will be operated between rated and maximum nameplate load, and nameplate power factor for a time period required to reach engine temperature equilibrium. Analysis will be performed to demonstrate that the expected loads are within the nameplate rated load.	Each as-built ancillary diesel generator provides power at generator terminal rated voltage and frequency when operated at rated load, and expected loads are within the rated nameplate load.
5d. Each ancillary diesel generator fuel oil storage tank contains adequate fuel oil capacity for seven days of ancillary diesel generator operation based on expected ADG load.	The as-built fuel oil storage tank capacity will be calculated based on expected ADG load.	The as-built fuel oil storage tank capacity is adequate to supply seven days of fuel oil to the ancillary diesel generator under continuous operation based on expected ADG load.
5e. Each of the ancillary diesel generator fuel oil transfer pumps start automatically and transfer fuel oil from the ancillary fuel oil storage tank to the ancillary diesel generator day tank at a rate greater than or equal to the usage rate of the ancillary diesel generator.	Testing will be performed to demonstrate that each as-built fuel oil transfer pump starts automatically and transfers fuel oil from the ancillary fuel oil storage tank to the ancillary diesel generator day tank at a rate greater than or equal to the usage rate of the ancillary diesel generator when operating between rated and maximum nameplate load.	Each as-built fuel oil transfer pump starts automatically and transfers fuel oil from the ancillary fuel oil storage tank to the ancillary diesel generator day tank at a rate greater than or equal to the usage rate of the ancillary diesel generator when operating between rated and maximum nameplate load.
6. (Deleted)		

Table 2.13.4-2

ITAAC For The Standby On-site AC Power Supply

Design Commitment	Inspections, Tests, Analyses	Acceptance Criteria
7. Each ancillary diesel generator and its associated auxiliaries, buses, fuel tanks, and fuel oil transfer pumps conform to Seismic Category II requirements.	i. Type tests and analyses of the ancillary diesel generators, their associated auxiliaries, buses, fuel tanks, and fuel oil transfer pumps will be performed. ii. Inspections of the as-built ancillary diesel generators, their associated auxiliaries, buses, fuel tanks, and fuel oil transfer pumps will be performed to verify that the equipment is installed in accordance with the configurations specified in the type tests and analyses.	i. Each as-built ancillary diesel generator and its associated auxiliaries, buses, fuel tanks, and fuel oil transfer pumps conform to Seismic Category II requirements. ii. Each ancillary diesel generator and its associated auxiliaries, buses, fuel tanks, and fuel oil transfer pumps are installed in accordance with the configurations specified by the type tests and analyses.

2.13.5 Uninterruptible AC Power Supply

Design Description

The Uninterruptible AC Power Supply (UPS) is divided into two subsystems, the safety-related UPS and the nonsafety-related UPS.

The nonsafety-related UPS system and the nonsafety-related Technical Support Center UPS system are not part of the plant safety design basis, and are independent and separated from the safety-related UPS system.

The safety-related UPS system provides four divisions of 120 VAC power to safety-related loads during normal, upset and accident conditions.

The Uninterruptible AC Power Supply alarms, displays, controls, and status indications in the main control room are addressed by Section 3.3.

Environmental qualification of the safety-related UPS system is addressed in Section 3.8.

(1) The functional arrangement of the safety-related UPS system is as described in Subsection 2.13.5 and Table 2.13.5-1 and is as shown on Figure 2.13.5-1.

(2) The functional arrangement of the nonsafety-related UPS system is as described in Subsection 2.13.5 and as shown on Figure 2.13.5-2.

(3) The UPS system equipment identified as Seismic Category I in Table 2.13.5-1 can withstand Seismic Category I loads without loss of safety function.

(4) The safety-related UPS system provides four independent and redundant safety-related divisions.

(5) Physical separation and electrical isolation are provided between safety-related divisions, and between safety-related divisions and nonsafety-related equipment, as defined in Regulatory Guide 1.75.

(6) Each safety-related UPS inverter is capable of supplying its AC load at both minimum and maximum battery terminal voltages.

(7) (Deleted)

(8) (Deleted)

(9) The safety-related UPS rectifiers are designed to prevent their AC source from becoming a load on the 250 VDC safety-related batteries when the AC power source is de-energized or has degraded voltage.

(10) The safety-related UPS inverter high DC input voltage trip setpoint and time delay are greater than the associated battery charger and UPS rectifier high DC output voltage trip setpoint and time delay.

(11) The safety-related UPS system supplies a voltage at the terminals of the safety-related utilization equipment that is within the equipment voltage tolerance limits.

(12) Electrical cables for the safety-related UPS system are rated to withstand fault current for the time required to clear the fault from their power source.

(13) Protective devices for the safety-related UPS system are rated to interrupt analyzed fault currents and are coordinated to only trip the protective device closest to the fault.

(14) Raceway for safety-related UPS system circuits are sized in accordance with design requirements.

Inspections, Tests, Analyses, and Acceptance Criteria

Table 2.13.5-2 provides a definition of the inspections, tests, and analyses, together with associated acceptance criteria for the Uninterruptible AC Power Supply.

Table 2.13.5-1
Uninterruptible AC Power Soppy System Equipment

Equipment Description	Location	Seismic Cat. I	Safety Related
Division 1 UPS 1-1	Reactor Building	Yes	Yes
Division 1 UPS 1-2	Reactor Building	Yes	Yes
Division 2 UPS 2-1	Reactor Building	Yes	Yes
Division 2 UPS 2-2	Reactor Building	Yes	Yes
Division 3 UPS 3-1	Reactor Building	Yes	Yes
Division 3 UPS 3-2	Reactor Building	Yes	Yes
Division 4 UPS 4-1	Reactor Building	Yes	Yes
Division 4 UPS 4-2	Reactor Building	Yes	Yes
Division 1 UPS Bus 11 Power Distribution Panel	Reactor Building	Yes	Yes
Division 1 UPS Bus 12 Power Distribution Panel	Reactor Building	Yes	Yes
Division 2 UPS Bus 21 Power Distribution Panel	Reactor Building	Yes	Yes
Division 2 UPS Bus 22 Power Distribution Panel	Reactor Building	Yes	Yes
Division 3 UPS Bus 31 Power Distribution Panel	Reactor Building	Yes	Yes
Division 3 UPS Bus 32 Power Distribution Panel	Reactor Building	Yes	Yes
Division 4 UPS Bus 41 Power Distribution Panel	Reactor Building	Yes	Yes
Division 4 UPS Bus 42 Power Distribution Panel	Reactor Building	Yes	Yes

Table 2.13.5-2

ITAAC For The Uninterruptible AC Power Supply

Design Commitment	Inspections, Tests, Analyses	Acceptance Criteria
1. The functional arrangement of the safety-related UPS system is as described in Subsection 2.13.5 and Table 2.13.5-1 and is as shown on Figure 2.13.5-1.	Inspections of the as-built safety-related UPS system will be performed.	The as-built safety-related UPS system conforms with the functional arrangement as described in Subsection 2.13.5 and as shown in Figure 2.13.5-1.
2. The functional arrangement of the nonsafety-related UPS system is as described in Subsection 2.13.5 and as shown on Figure 2.13.5-2.	Inspections of the as-built nonsafety-related UPS system will be performed.	The as-built nonsafety-related UPS system conforms with the functional arrangement as described in Subsection 2.13.5 and as shown in Figure 2.13.5-2.
3. The UPS system equipment identified as Seismic Category I in Table 2.13.5-1 can withstand Seismic Category I loads without loss of safety function.	i. Inspections will be performed to verify that the UPS system equipment identified as Seismic Category I in Table 2.13.5-1 is located in a Seismic Category I structure.	i. The Seismic Category I equipment identified in Table 2.13.5-1 is located in a Seismic Category I structure.
	ii. Type tests, analyses, or a combination of type tests and analyses of the UPS system safety-related Seismic Category I equipment will be performed using analytical assumptions, or under conditions which bound the Seismic Category I design requirements.	ii. The as-built UPS system can withstand Seismic Category I loads without loss of safety function.

Table 2.13.5-2

ITAAC For The Uninterruptible AC Power Supply

Design Commitment	Inspections, Tests, Analyses	Acceptance Criteria
	iii Inspections and analyses of the as-built UPS system equipment, including anchorage, identified in Table 2.13.5-1 are seismically bounded by the tested or analyzed conditions.	iii. The as-built UPS system equipment, including anchorage, identified as Seismic Category I in Table 2.13.5-1 can withstand Seismic Category I loads without loss of safety function.
4. The safety-related UPS system provides four independent and redundant safety-related divisions.	Tests will be performed on the as-built safety-related UPS system by providing a test signal in only one safety-related division at a time.	A test signal exists only in the safety-related division under test in the as-built safety-related UPS system; and a test signal originating from the as-built divisional safety-related UPS distribution panel exists at the terminals of its divisional safety-related loads.
5. Physical separation and electrical isolation are provided between safety-related divisions, and between safety-related divisions and nonsafety-related equipment, as defined in Regulatory Guide 1.75.	Inspection of the as-built safety-related UPS system will be performed.	The as-built safety-related UPS system, physical separation and electrical isolation exist between safety-related divisions, as defined in Regulatory Guide 1.75. Physical separation and electrical isolation exists between safety-related divisions and nonsafety-related equipment, as defined in Regulatory Guide 1.75.
6. Each safety-related UPS inverter is capable of supplying its AC load at both minimum and maximum battery terminal voltages.	Testing of each as-built safety-related UPS inverter will be performed by applying a combination of simulated or real loads with DC input at both minimum and maximum battery terminal voltages.	The as-built safety-related UPS inverter supplies its rated load while maintaining its rated voltage at its rated frequency, within tolerances acceptable for its AC loads.

Table 2.13.5-2

ITAAC For The Uninterruptible AC Power Supply

Design Commitment	Inspections, Tests, Analyses	Acceptance Criteria
7. (Deleted)		
8. (Deleted)		
9. The safety-related UPS rectifiers are designed to prevent their AC source from becoming a load on the 250 VDC safety-related batteries when the AC power source is de-energized or has degraded voltage.	Testing of the each safety-related rectifier will be performed to demonstrate that there is no power feedback from a loss of AC input power.	The safety-related rectifiers prevent the AC input source from becoming a load on the 250 VDC safety-related batteries during a loss of AC power condition.
10. The safety-related UPS inverter high DC input voltage trip setpoint and time delay are greater than the associated battery charger and UPS rectifier high DC output voltage trip setpoint and time delay.	Tests will be performed using simulated signals of the UPS trips.	The safety-related UPS inverter high DC input voltage trip setpoint and time delay are greater than the associated battery charger and UPS rectifier high DC output voltage trip setpoint and time delay as demonstrated by applying test signals and verifying that: • The inverter high DC input voltage trip setpoint is greater than the battery charger and UPS input rectifier high DC output voltage trip, and; • The inverter high DC input voltage trip time delay is greater than the associated battery charger and UPS input rectifier high DC output voltage trip time delay.

Table 2.13.5-2

ITAAC For The Uninterruptible AC Power Supply

Design Commitment	Inspections, Tests, Analyses	Acceptance Criteria
11. The safety-related UPS system supplies a voltage at the terminals of the safety-related utilization equipment that is within the equipment voltage tolerance limits.	i. Analyses of the as-built safety-related UPS 120 volt distribution system are performed to determine the voltage at the safety-related utilization equipment terminals. ii. Type tests will be performed to confirm the safety-related utilization equipment functions properly at the established maximum and minimum terminal voltage tolerance limits.	i. The as-built safety-related UPS system supplies a voltage at the terminals of the safety-related utilization equipment that is within the utilization equipment voltage tolerance limits. ii. The safety-related utilization equipment functions properly at the established maximum and minimum terminal voltage tolerance limits.
12. Electrical cables for the safety-related UPS system are rated to withstand fault current for the time required to clear the fault from their power source.	Analyses of the as-built safety-related UPS system will be performed to determine possible fault currents.	For the as-built safety-related UPS system, electrical cables can withstand the analyzed fault currents, as determined by manufacturer's ratings, for the time required to clear the fault from its power source.
13. Protective devices for the safety-related UPS system are rated to interrupt analyzed fault currents and are coordinated to only trip the protective device closest to the fault.	Analyses of the as-built safety-related UPS system will be performed to determine possible fault currents and the required size of protective devices to ensure that they are coordinated to only trip the protective device closest to the fault.	For the as-built safety-related UPS system, the protective devices for the safety-related UPS system loads are sized to only trip the protective device closest to the fault.
14. Raceway for safety-related UPS system circuits are sized in accordance with design requirements.	Analyses of the as-built safety-related UPS system will be performed to determine required raceway sizing.	For the as-built safety-related UPS system, raceway sizing is in accordance with design requirements and raceway loading is within that assumed in the electrical analyses.

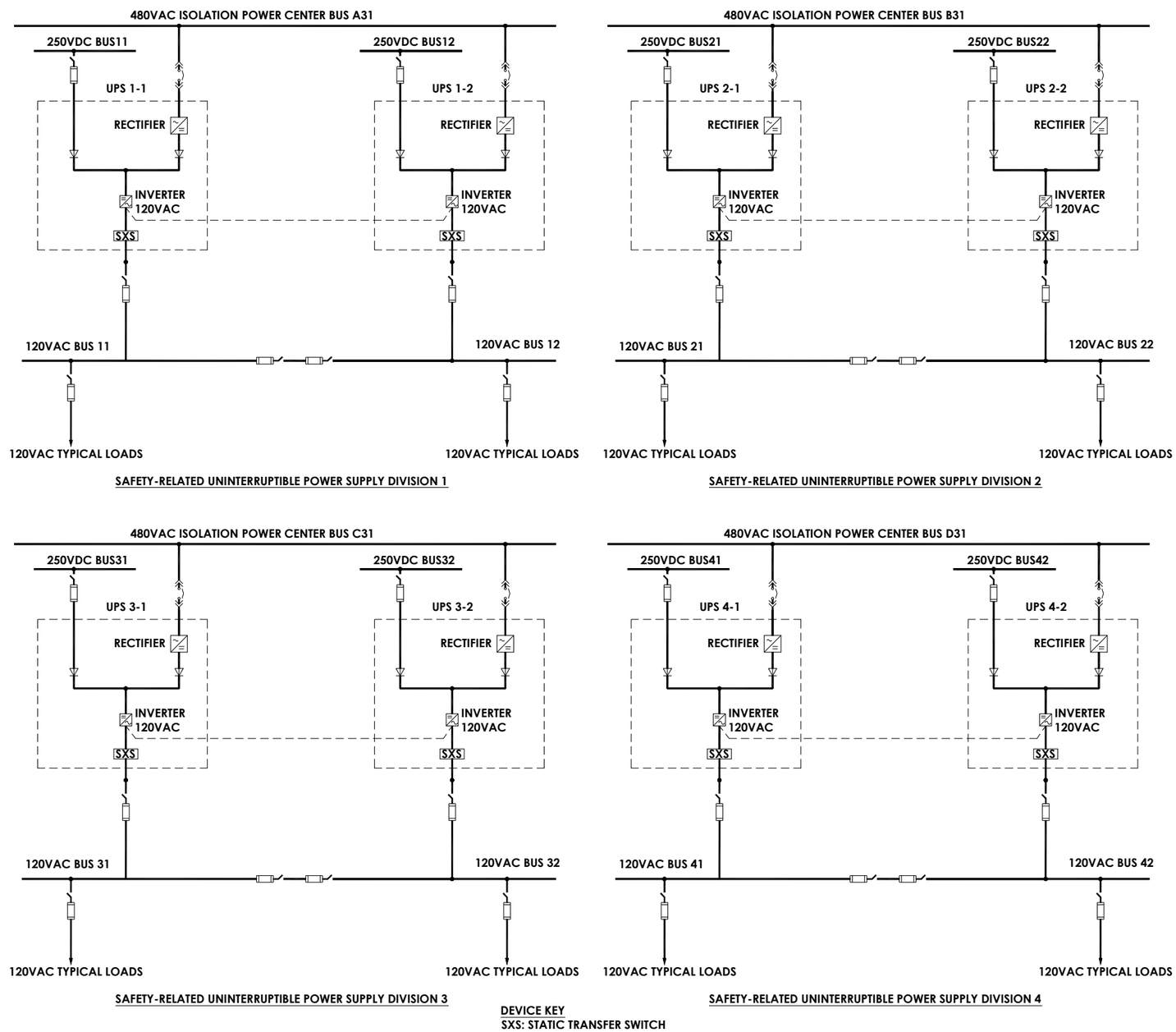

Figure 2.13.5-1. Safety-Related UPS System Functional Arrangement

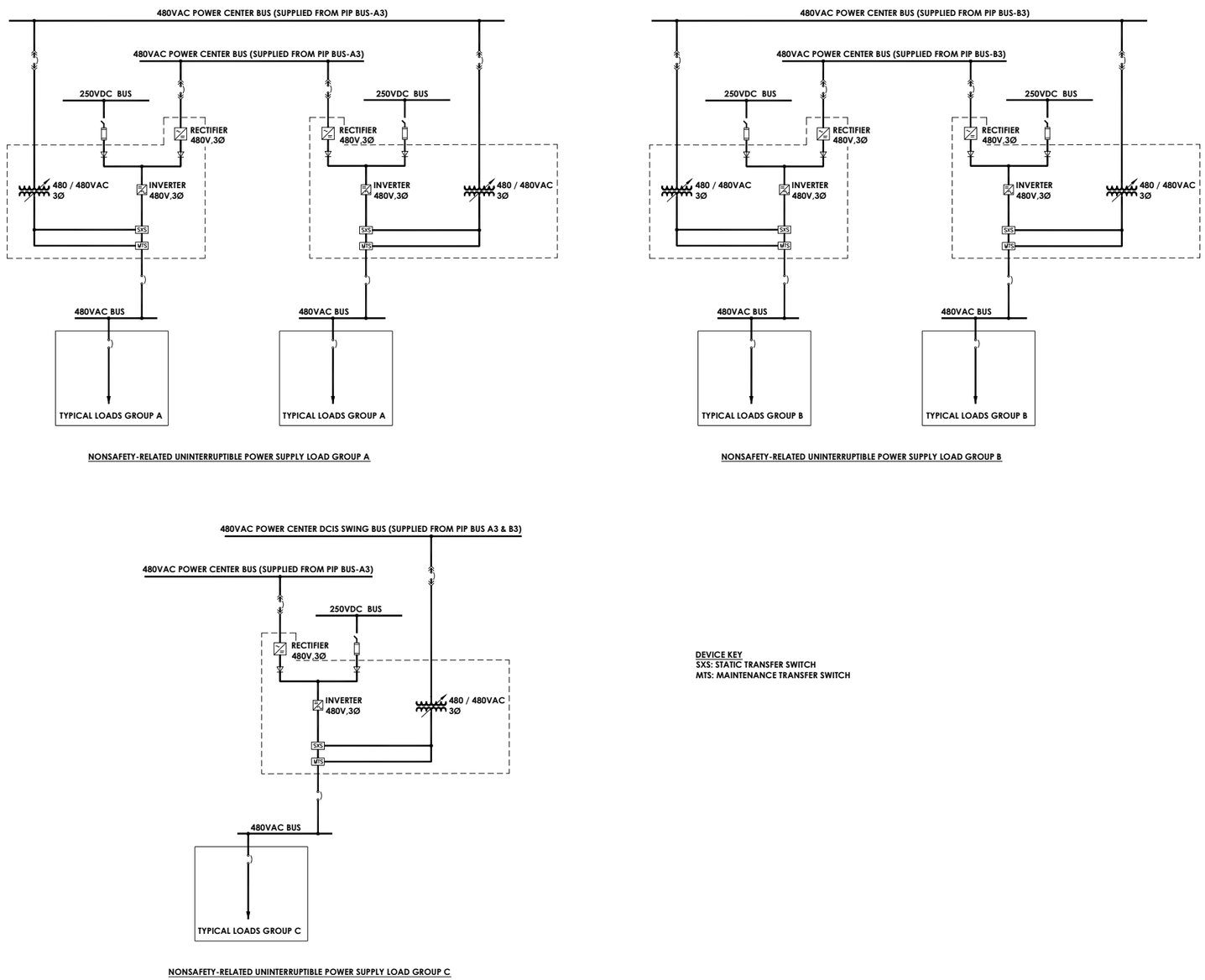

Figure 2.13.5-2. Sh 1. Nonsafety-Related UPS System Functional Arrangement

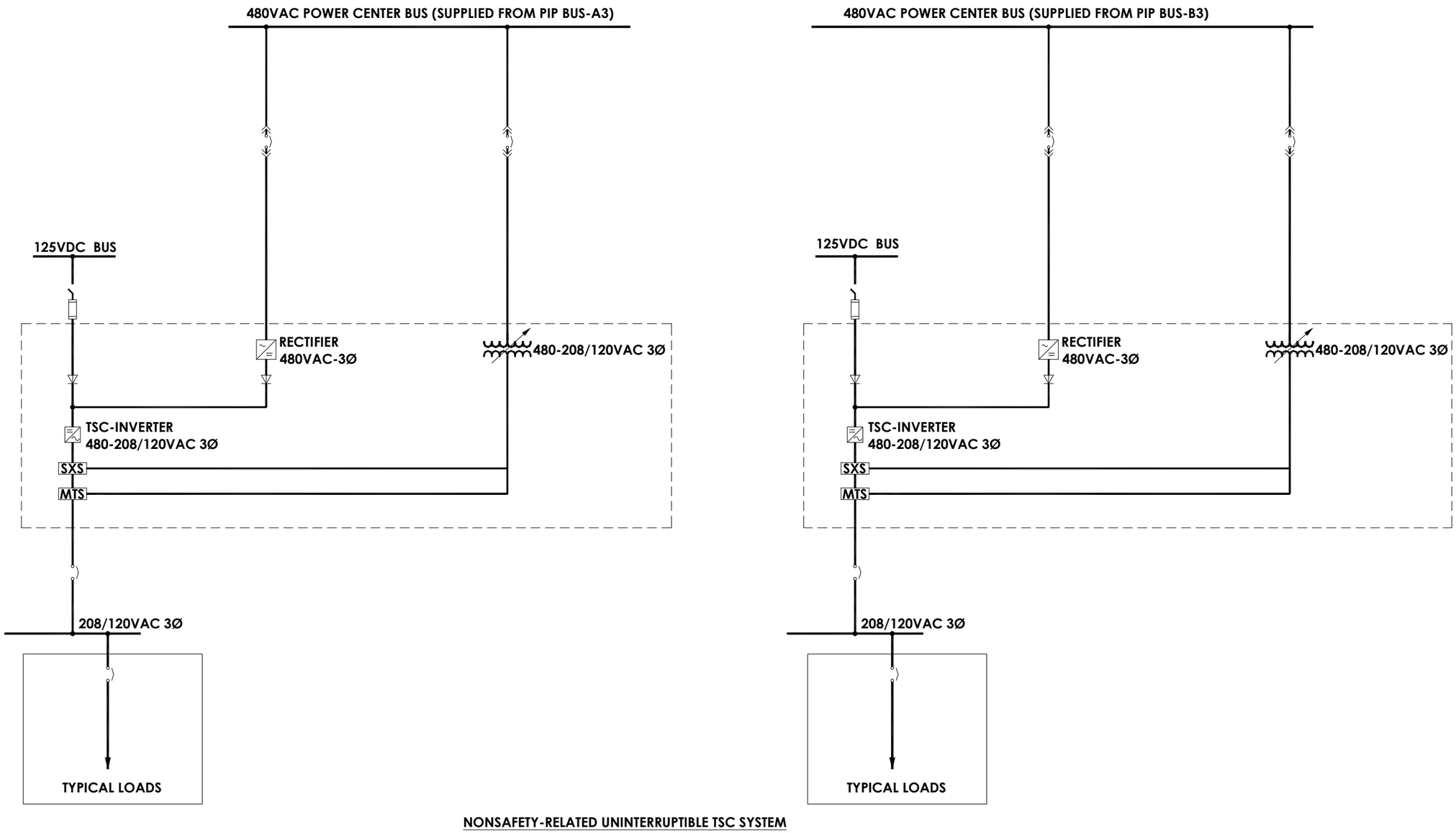

Figure 2.13.5-2 Sh 2
Nonsafety-Related UPS System Functional Arrangement

2.13.6 (Deleted)

2.13.7 Communications System

No ITAAC are required for this system

Table 2.13.7-1

(Deleted)

Design Commitment	Inspections, Tests, Analyses	Acceptance Criteria
1. (Deleted)		

2.13.8 Lighting Power Supply

Design Description

The plant lighting systems furnish the illumination required for safe performance of plant operation, security, shutdown, and maintenance activities. The lighting systems include the Control Room and Remote Shutdown Station Emergency Lighting, normal, standby, and DC self-contained battery operated emergency lighting. The security lighting is described in separate security documents.

(1) The functional arrangement of Control Room and Remote Shutdown Station Emergency Lighting is as described in the Design Description of this Subsection 2.13.8.

(2) The Control Room and Remote Shutdown Station Emergency Lighting meets Seismic Category I requirements for mountings.

(3) The Control Room and Remote Shutdown Station Emergency Lighting equipment and cables are physically separated.

(4) The Control Room and Remote Shutdown Station Emergency Lighting provides illumination levels equal to or greater than those recommended by the Illuminating Engineering Society of North America (IESNA) for at least 72 hours following a design basis accident and a loss of all AC power sources.

(5) The DC Self-Contained Battery-Operated Lighting Units provide illumination levels equal to or greater than those recommended by the IESNA in the remote shutdown rooms and in those areas of the plant required for power restoration and recovery from a fire, for at least eight hours.

(6) Electrical isolation of the nonsafety-related Control Room and Remote Shutdown Station emergency lighting circuits from the safety-related Uninterruptible AC power supply is accomplished by the use of two series isolation devices.

(7) The Control Room and Remote Shutdown Station Emergency Lighting shall be capable of being powered by a reliable power source after the first 72 hours of a design basis event.

Inspections, Tests, Analyses, and Acceptance Criteria

Table 2.13.8-1 provides a definition of the inspections, tests, and analyses, together with associated acceptance criteria for the Control Room and Remote Shutdown Station Emergency Lighting Power Supply.

Table 2.13.8-1

ITAAC For The Lighting Power Supply

Design Commitments	Inspections, Tests, Analyses	Acceptance Criteria
1. The functional arrangement of Control Room and Remote Shutdown Station Emergency Lighting is as described in the Design Description of this Subsection 2.13.8.	Inspections of the as-built Control Room and Remote Shutdown Station Emergency Lighting will be conducted.	The as-built Control Room and Remote Shutdown Station Emergency Lighting conform to the functional arrangement as described in the Design Description of this Subsection 2.13.8.
2. The Control Room and Remote Shutdown Station Emergency Lighting meets Seismic Category I requirements for mountings.	Analysis of the Control Room and Remote Shutdown Station Emergency Lighting mountings will be performed.	The Control Room and Remote Shutdown Station Emergency Lighting mountings meet Seismic Category I requirements.
3. The Control Room and Remote Shutdown Station Emergency Lighting equipment and cables are physically separated.	Inspection of the as-built Control Room and Remote Shutdown Station Emergency Lighting equipment and cables will be performed.	The as-built Control Room and Remote Shutdown Station Emergency Lighting equipment and cables are physically separated between safety-related divisions and between safety-related divisions and nonsafety-related equipment according to RG 1.75 and IEEE 384, through spatial separation, physical barriers, or separate raceways, conduit or metal troughs, .up to the electrical isolation devices. Safety-related cables are routed in respective divisional raceways or conduit. Nonsafety-related cables from the isolation devices to the light fixtures are in separate raceways or conduit.

Table 2.13.8-1

ITAAC For The Lighting Power Supply

Design Commitments	Inspections, Tests, Analyses	Acceptance Criteria
4. The Control Room and Remote Shutdown Station Emergency Lighting provides illumination levels equal to or greater than those recommended by the IESNA for at least 72 hours following a design basis accident and a loss of all AC power sources.	Testing of the as-built Control Room and Remote Shutdown Station Emergency Lighting will be performed.	The as-built Control Room and Remote Shutdown Station Emergency Lighting provides the illumination required by the IESNA for at least 72 hours following a design basis accident and a loss of all AC power sources.
5. The DC Self-Contained Battery-Operated Lighting Units provide illumination levels equal to or greater than those recommended by the IESNA in the remote shutdown rooms and in those areas of the plant required for power restoration and recovery from a fire, for at least eight hours.	Testing of the as-built DC Self-Contained Battery-Operated Lighting Units will be performed.	Each of the as-built DC Self-Contained Battery-Operated Lighting Units provide the illumination required by the IESNA in the remote shutdown rooms and in areas of the plant required for power restoration / recovery from a fire to comply with the requirement of RG 1.189. Each unit will provide 8 hours of continuous illumination without battery recharge.
6. Electrical isolation of the nonsafety-related Control Room and Remote Shutdown Station emergency lighting circuits from the safety-related Uninterruptible AC power supply is accomplished by the use of two series isolation devices.	Inspection and analysis of the as-built lighting circuits will be conducted to verify that the non-safety-related control room and Remote Shutdown Station emergency lighting circuits and the safety-related Uninterruptible AC power supply are isolated by two series isolation devices.	The as-built nonsafety-related Control Room and Remote Shutdown Station emergency lighting circuits and the safety-related Uninterruptible AC Power Supply are isolated by two series isolation devices.

Table 2.13.8-1

ITAAC For The Lighting Power Supply

Design Commitments	Inspections, Tests, Analyses	Acceptance Criteria
7. The Control Room and Remote Shutdown Station Emergency Lighting shall be capable of being powered by a reliable power source after the first 72 hours of a design basis event.	Inspections and tests (as needed) will be performed that confirm the capability of powering the Control Room and Remote Shutdown Station Emergency Lighting from a reliable power source that will be available after the first 72-hours of a design basis event.	The Control Room and Remote Shutdown Station Emergency Lighting is capable of being powered from a reliable power source that will be available after the first 72-hours of a design basis event.

2.13.9 Grounding and Lightning Protection System

Design Description

The electrical grounding and lightning protection system includes:

- A plant grounding grid;
- An instrument and computer grounding network;
- An equipment and system grounding network for grounding the neutral points of the main generator, main step-up transformers, auxiliary transformers, load center transformers, and onsite standby and ancillary diesel generators and for grounding equipment enclosures, metal structures, metallic tanks, and the ground bus of switchgear assemblies, load centers, motor control centers, and control cabinets; and
- A lightning protection network for protection of exposed structures and buildings housing safety-related and fire protection equipment.

(1) The functional arrangement of the Lightning Protection and Grounding system is as described in the Design Description of this Subsection 2.13.9.

Inspections, Tests, Analyses, and Acceptance Criteria

Table 2.13.9-1 provides a definition of the inspections, tests, and analyses, together with associated acceptance criteria for the grounding and lightning protection system.

Table 2.13.9-1

ITAAC For The Grounding and Lightning Protection System

Design Commitments	Inspections, Tests, Analyses	Acceptance Criteria
1. The functional arrangement of the Lightning Protection and Grounding system is as described in the Design Description of this Subsection 2.13.9.	Inspections of the as-built Lightning Protection and Grounding system will be performed.	The as-built Lightning Protection and Grounding system exists and conforms to the functional arrangement as described in the design description of Subsection 2.13.9, and: • Connection exists between the instrument and computer grounding network and the plant ground grid. • Connection exists between the equipment and system grounding network and the plant ground grid. • Connection exists between the lightning protection network and the plant ground grid.

2.14 POWER TRANSMISSION

No ITAAC are required for this system.

2.15 CONTAINMENT, COOLING AND ENVIRONMENTAL CONTROL SYSTEMS

2.15.1 Containment System

Design Description

The Containment System confines the potential release of radioactive material in the event of a design basis accident. The Containment System is safety-related and is comprised of a reinforced concrete containment vessel (RCCV), penetrations and DW head.

The Containment System is shown in Figure 2.15.1-1. The RCCV is located in the Reactor Building.

The MCR set of displays, alarms and controls, based on the applicable codes and standards, including Human Factors Engineering (HFE) evaluations and emergency procedure guidelines, for the Containment System is addressed in Section 3.3.

The environmental qualification of Containment Systems components is addressed in Section 3.8; and the environmental and seismic qualification of digital instrumentation and controls equipment is addressed in Section 3.8.

(1) The functional arrangement of the Containment System is as described in the Design Description of this Subsection 2.15.1 and as shown in Figure 2.15.1-1.

(2) a1. The components identified in Table 2.15.1-1 as ASME Code Section III are designed in accordance with ASME Code Section III requirements.

a2. The RCCV and its liners are designed to meet the requirements in Article CC-3000 of ASME Code, Section III, Division 2, and seismic Category I requirements. The steel components of the RCCV are designed to meet the requirements in Article NE-3000 of ASME Code, Section III, Division 1.

a3. The piping identified in Table 2.15.1-1 as ASME Code Section III is designed in accordance with ASME Code Section III requirements.

b1. The design of the components identified in Table 2.15.1-1 as ASME Code Section III will be reconciled with the design requirements.

b2. The RCCV and its liners are designed to meet the requirements in Article CC-3000 of ASME Code, Section III, Division 2, and seismic Category I requirements. The steel components of the RCCV are designed to meet the requirements in Article NE-3000 of ASME Code, Section III, Division 1. The design of these components will be reconciled with the design requirements.

b3. The as-built piping identified in Table 2.15.1-1 as ASME Code Section III shall be reconciled with the piping design requirements.

c1. The components identified in Table 2.15.1-1 as ASME Code Section III are fabricated, installed, and inspected in accordance with ASME Code Section III requirements.

c2. The RCCV and its liners are fabricated, installed, and inspected in accordance with the requirements in Article CC-3000 of ASME Code, Section III, Division 2. The steel components of the RCCV are fabricated, installed, and inspected to meet the requirements in Article NE-3000 of ASME Code, Section III, Division 1.

c3. The piping identified in Table 2.15.1-1 as ASME Code Section III is fabricated, installed, and inspected in accordance with ASME Code Section III requirements.

(3) a. Pressure boundary welds in components identified in Tables 2.15.1-1a and 2.15.1-1b as ASME Code Section III meet ASME Code Section III non-destructive examination requirements.

b. Pressure boundary welds in piping identified in Tables 2.15.1-1a and 2.15.1-1b as ASME Code Section III meet ASME Code Section III non-destructive examination requirements.

(4) The components and piping identified in Tables 2.15.1-1a and 2.15.1-1b as ASME Code Section III retain their pressure boundary integrity at their design pressure.

(5) The Seismic Category I equipment identified in Tables 2.15.1-1a, 2.15.1-1b and 2.15.1-1c can withstand Seismic Category I loads without loss of safety function.

(6) a. The electrical safety-related components associated with actuation and status monitoring of final control elements of the Containment System equipment listed in Tables 2.15.1-1a, 2.15.1-1b, and 2.15.1-1c receive power from their respective safety-related divisional power supplies.

b. Separate electrical penetrations are provided for circuits of each safety-related division and for nonsafety-related circuits.

c. The circuits of each electrical penetration are of the same voltage class.

(7) The containment system provides a barrier against the release of fission products to the atmosphere.

(8) The containment system pressure boundary retains its structural integrity when subject to design pressure.

(9) The containment system provides the safety function of containment isolation for containment boundary integrity.

(10) Containment electrical penetration assemblies, whose maximum available fault current (including failure of upstream devices) is greater than the continuous rating of the penetration, are protected against currents that are greater than the continuous ratings.

(11) (Deleted)

(12) The amount of chlorine bearing cable insulation exposed to the containment atmosphere is limited.

(13) The DW and wetwell (WW) volumes are adequately sized to accommodate the calculated maximum DW temperature and absolute pressure that are postulated to occur as a result of a design basis accident.

(14) The water volume of the WW is adequately sized to condense the steam that is forced into the WW from the DW due to a postulated design basis event.

(15) Each vacuum breaker isolation valve automatically closes if the vacuum breaker does not fully close when required.

(16) a. Each vacuum breaker has proximity sensors to detect open/close position. This indication is available in the main control room.

b. Each vacuum breaker has temperature sensors to detect bypass leakage at design basis accident conditions. This indication is available in the main control room.

(17) The containment penetration isolation design for each fluid piping system requiring isolation meets the single-failure criterion to ensure completion of penetration isolation.

(18) DW to WW bypass leakage is less than the assumed value used in the containment capability design basis containment response analysis.

(19) Total DW to WW vacuum breaker bypass pathway leakage is less than the assumed value used in the containment capability design basis containment response analysis.

(20) Each vacuum breaker opening differential pressure is less than or equal to the required opening differential pressure.

(21) Each vacuum breaker closing differential pressure is greater than or equal to the required closing differential pressure.

(22) a. Containment isolation valves are located as close to the containment as practical, consistent with General Design Criteria 55, 56 and 57.

b. The as-built location of containment isolation valves relative to containment shall be reconciled with design requirements.

(23) a. The containment boundary electric penetration assemblies are designed in accordance with ASME Boiler and Pressure Vessel Code, Division 1, Section III, Subsection NE for Class MC Components and Seismic Category I requirements.

b. The containment boundary electric penetration assemblies shall be reconciled with the design requirements.

c. The containment boundary electric penetration assemblies are fabricated, installed, and inspected in accordance with ASME Boiler and Pressure Vessel Code, Division 1, Section III, Subsection NE for Class MC Components.

Inspections, Tests, Analyses, and Acceptance Criteria

Table 2.15.1-2 provides a definition of the inspections, tests, and analyses, together with associated acceptance criteria for the Containment System.

Table 2.15.1-1a

Containment System Penetrations[1] and Equipment

Equipment Name	ASME Code Section III	Seismic Cat. I	Remote Manual Operation	Safety-Related	Containment Isolation Signal	Normal Position	Post-Accident Position	Loss of Motive Power Position
Nuclear Boiler								
Total 4 Penetrations (One penetration per main steam line)								
Inboard main steam isolation valve (MSIV) (4 valves)	Yes	Yes	Yes	Yes	Yes	open	closed	closed
Outboard main steam isolation valve (MSIV) (4 valves)	Yes	Yes	Yes	Yes	Yes	open	closed	closed
Outboard MSIV upstream drain line outboard containment isolation valve (4 valves)	Yes	Yes	Yes	Yes	Yes	open	open/closed	closed
Total 1 Penetration (One penetration per drain line)								
Inboard MSIV upstream drain line inboard containment isolation valve (1 valve)	Yes	Yes	Yes	Yes	Yes	open	closed	closed
Inboard MSIV upstream drain line outboard containment isolation valve (1 valve)	Yes	Yes	Yes	Yes	Yes	open	closed	closed
Total 2 Penetrations (One penetration per feedwater (FW) supply line)								
FW supply line second outboard containment isolation valve (2 valves)	Yes	Yes	Yes	Yes	Yes	open	closed	closed
FW supply line outboard containment isolation valve (2 valves)	Yes	Yes	Yes	Yes	Yes	open	closed	Closed
FW supply line inboard containment isolation valve (2 valves)	Yes	Yes	No	Yes	No	open	open/closed	–

Table 2.15.1-1a

Containment System Penetrations[1] and Equipment

Equipment Name	ASME Code Section III	Seismic Cat. I	Remote Manual Operation	Safety-Related	Containment Isolation Signal	Normal Position	Post-Accident Position	Loss of Motive Power Position
RWCU/SDC to Feedwater outboard containment isolation valve (2 valves)	Yes	Yes	No	Yes	No	open	open/closed	Open
Isolation Condenser								
Total 4 Penetrations (One shared penetration for each pair consisting of one steam supply line and one purge line)								
Steam supply line inboard isolation valve (4 valves)	Yes	Yes	Yes	Yes	Yes	open	open/closed	as-is
Steam supply line outboard isolation valve (4 valves)	Yes	Yes	Yes	Yes	Yes	open	open/closed	as-is
Condenser purge line inboard isolation valve (4 valves)	Yes	Yes	Yes	Yes	Yes	open	open/closed	closed
Condenser purge line outboard isolation valve (4 valves)	Yes	Yes	No	Yes	No	open	open	–
Total 4 Penetrations (One penetration per condensate return line)								
Condensate return line inboard isolation valve (4 valves)	Yes	Yes	Yes	Yes	Yes	open	open/closed	as-is
Condensate return line outboard isolation valve (4 valves)	Yes	Yes	Yes	Yes	Yes	open	open/closed	as-is
Total 4 Penetrations (One shared penetration for each pair consisting of one condenser upper header vent line and one condenser lower header vent line)								
Condenser upper header inboard vent valve (4 valves)	Yes	Yes	Yes	Yes	No	closed	closed	closed
Outboard condenser upper header outboard vent valve (4 valves)	Yes	Yes	Yes	Yes	No	closed	closed	closed

Table 2.15.1-1a

Containment System Penetrations[1] and Equipment

Equipment Name	ASME Code Section III	Seismic Cat. I	Remote Manual Operation	Safety-Related	Containment Isolation Signal	Normal Position	Post-Accident Position	Loss of Motive Power Position
Inboard condenser lower header inboard vent valve (4 valves)	Yes	Yes	Yes	Yes	No	closed	closed	closed
Outboard condenser lower header outboard vent valve (4 valves)	Yes	Yes	Yes	Yes	No	closed	closed	closed
Inboard bypass lower header inboard vent valve (4 valves)	Yes	Yes	No	Yes	No	closed	open/closed	–
Outboard bypass lower header outboard vent valve (4 valves)	Yes	Yes	Yes	Yes	No	closed	open/closed	open
Standby Liquid Control								
Total 2 Penetrations (One penetration per SLC injection line)								
SLC injection line squib valve (4 valves)	Yes	Yes	No	Yes	No	closed	open	as-is
SLC injection line outboard check valve (2 valves)	Yes	Yes	No	Yes	No	closed	open/closed	–
SLC injection line inboard check valve (2 valves)	Yes	Yes	No	Yes	No	closed	open/closed	N/A
Process Radiation Monitoring								
Total 2 Penetrations (One penetration per DW Fission Product Monitoring Line)								
DW Fission Product Monitoring Line Inboard isolation Valve (1 valve)	Yes	Yes	Yes	Yes	Yes	open	open	as-is
DW Fission Product Monitoring Line Outboard isolation Valve (1 valve)	Yes	Yes	Yes	Yes	Yes	open	open	as-is

Table 2.15.1-1a

Containment System Penetrations[1] and Equipment

Equipment Name	ASME Code Section III	Seismic Cat. I	Remote Manual Operation	Safety-Related	Containment Isolation Signal	Normal Position	Post-Accident Position	Loss of Motive Power Position
DW Fission Product Monitoring Line Inboard isolation Valve (1 valve)	Yes	Yes	Yes	Yes	Yes	open	open	as-is
DW Fission Product Monitoring Line Outboard isolation Valve (1 valve)	Yes	Yes	Yes	Yes	Yes	open	open	as-is
Fuel and Auxiliary Pools Cooling								
Total 1 Penetration (One penetration per reactor well drain line)								
Reactor well drain line inboard containment isolation valve (1 valve)	Yes	Yes	No	Yes	No	closed	closed	–
Reactor well drain line outboard containment isolation valve (1 valve)	Yes	Yes	No	Yes	No	closed	closed	–
Total 1 Penetration (One penetration per GDCS pool return line)								
GDCS pool return line outboard isolation valve (1 valve)	Yes	Yes	Yes	Yes	Yes	closed	closed	closed
GDCS pool return line inboard isolation check valve (1 valve)	Yes	Yes	No	Yes	No	closed	closed	–
Total 2 Penetrations (Two penetrations per one suppression pool return line)								
Suppression pool return line outboard isolation valve (2 valves)	Yes	Yes	Yes	Yes	No	closed	closed	as-is
Suppression pool return line inboard isolation check valve (2 valves)	Yes	Yes	No	Yes	No	closed	closed	–

Table 2.15.1-1a

Containment System Penetrations[1] and Equipment

Equipment Name	ASME Code Section III	Seismic Cat. I	Remote Manual Operation	Safety-Related	Containment Isolation Signal	Normal Position	Post-Accident Position	Loss of Motive Power Position
Total 1 Penetration (One penetration per DW spray line)								
DW spray line outboard isolation valve (1 valve)	Yes	Yes	Yes	Yes	No	closed	closed	closed
DW spray line inboard isolation check valve (1 valve)	Yes	Yes	No	Yes	No	closed	closed	–
Total 2 Penetrations (2 penetrations per one suppression pool suction line)								
Suppression pool suction line inboard isolation valve (2 valves)	Yes	Yes	Yes	Yes	No	closed	closed	as-is
Suppression pool suction line outboard isolation valve (2 valves)	Yes	Yes	Yes	Yes	No	closed	closed	as-is
Total 1 Penetration (One penetration per GDCS pool suction line)								
GDCS pool suction line inboard isolation valve (1 valve)	Yes	Yes	Yes	Yes	Yes	closed	closed	closed
GDCS pool suction line outboard isolation valve (1 valve)	Yes	Yes	Yes	Yes	Yes	closed	closed	closed
Reactor Water Cleanup/Shutdown Cooling								
Total 2 Penetrations (One penetration per RWCU/SDC mid-vessel suction line)								
RWCU/SDC mid-vessel suction line inboard isolation valve (2 valves)	Yes	Yes	Yes	Yes	Yes	open	closed	closed
RWCU/SDC mid-vessel suction line outboard isolation valve (2 valves)	Yes	Yes	Yes	Yes	Yes	open	closed	closed

Table 2.15.1-1a

Containment System Penetrations[1] and Equipment

Equipment Name	ASME Code Section III	Seismic Cat. I	Remote Manual Operation	Safety-Related	Containment Isolation Signal	Normal Position	Post-Accident Position	Loss of Motive Power Position
Total 2 Penetrations (One penetration per RWCU/SDC bottom head suction line)								
RWCU/SDC bottom head suction line inboard isolation valve (2 valves)	Yes	Yes	Yes	Yes	Yes	open	closed	closed
RWCU/SDC bottom head suction line outboard isolation valve (2 valves)	Yes	Yes	Yes	Yes	Yes	open	closed	closed
Total 2 Penetrations (One penetration per RWCU/SDC bottom head suction sample line)								
RWCU/SDC bottom head suction line sample line inboard isolation valve (2 valves)	Yes	Yes	Yes	Yes	Yes	closed	open/closed	closed
RWCU/SDC bottom head suction line sample line outboard isolation valve (2 valves)	Yes	Yes	Yes	Yes	Yes	closed	open/closed	closed
Chilled Water								
Total 2 penetration (One penetration per Chilled water supply line to DW cooler)								
Chilled water supply line to DW cooler outboard isolation valve (2 valves)	Yes	Yes	Yes	Yes	Yes	open	closed	closed
Chilled water supply line to DW cooler inboard isolation valve (2 valves)	Yes	Yes	Yes	Yes	Yes	open	closed	closed

Table 2.15.1-1a

Containment System Penetrations[1] and Equipment

Equipment Name	ASME Code Section III	Seismic Cat. I	Remote Manual Operation	Safety-Related	Containment Isolation Signal	Normal Position	Post-Accident Position	Loss of Motive Power Position
Total 2 penetration (One penetration per Chilled water return line from DW cooler)								
Chilled water return line from DW cooler inboard isolation valve (2 valves)	Yes	Yes	Yes	Yes	Yes	open	closed	closed
Chilled water return line from DW cooler outboard isolation valve (2 valves)	Yes	Yes	Yes	Yes	Yes	open	closed	closed
Makeup Water								
Total 1 Penetration (One penetration per makeup water line)								
Demin water DW distribution system outboard containment isolation valve (1 valve)	Yes	Yes	No	Yes	No	closed	closed	–
Demin water DW distribution system inboard containment isolation valve (1 valve)	Yes	Yes	No	Yes	No	closed	closed	–
Service Air								
Total 1 Penetration (One penetration per service air line)								
Service air system inboard containment isolation valve (1 valve)	Yes	Yes	No	Yes	No	closed	closed	–
Service air system outboard containment isolation valve (1 valve)	Yes	Yes	No	Yes	No	closed	closed	–
High Pressure Nitrogen Gas Supply								

Table 2.15.1-1a

Containment System Penetrations[1] and Equipment

Equipment Name	ASME Code Section III	Seismic Cat. I	Remote Manual Operation	Safety-Related	Containment Isolation Signal	Normal Position	Post-Accident Position	Loss of Motive Power Position
Total 1 Penetration (One penetration per N2 supply line to ADS, SRV, and ICIV accumulator)								
N2 supply line outboard isolation valve to ADS, SRV and ICS isolation valve accumulator (1 valve)	Yes	Yes	Yes	Yes	Yes	open	closed	closed
N2 supply line inboard isolation check valve to ADS, SRV and ICS isolation valve accumulator (1 valve)	Yes	Yes	No	Yes	No	open/closed	closed	–
Total 1 Penetration (One penetration per N2 supply line to MSIV and other users)								
N2 supply line outboard isolation valve to MSIV and other uses (1 valve)	Yes	Yes	Yes	Yes	Yes	open	closed	closed
N2 supply line inboard check valve to MSIV and other uses (1 valve)	Yes	Yes	No	Yes	No	open/closed	closed	–
Containment Inerting								
Total 2 Penetrations (Two penetrations per Air/N2 supply line)								
Air/N2 supply line to suppression pool inboard isolation valve (1 valve)	Yes	Yes	Yes	Yes	Yes	closed	closed	closed
Air/N2 supply line to outboard isolation valve (1 valve)	Yes	Yes	Yes	Yes	Yes	closed	closed	closed
Air/N2 supply line to upper DW inboard isolation valve (1 valve)	Yes	Yes	Yes	Yes	Yes	closed	closed	closed
N2 makeup line outboard isolation	Yes	Yes	Yes	Yes	Yes	open	closed	closed

Table 2.15.1-1a

Containment System Penetrations[1] and Equipment

Equipment Name	ASME Code Section III	Seismic Cat. I	Remote Manual Operation	Safety-Related	Containment Isolation Signal	Normal Position	Post-Accident Position	Loss of Motive Power Position
valve (1 valve)								
N2 makeup line to suppression pool inboard isolation valve (1 valve)	Yes	Yes	Yes	Yes	Yes	open	closed	closed
N2 makeup line to upper DW outboard isolation valve (1 valve)	Yes	Yes	Yes	Yes	Yes	open	closed	closed
Total 2 Penetrations (Two penetrations per exhaust line)								
Lower DW exhaust line outboard isolation valve (1 valve)	Yes	Yes	Yes	Yes	Yes	closed	closed	closed
Containment atmospheric exhaust line outboard isolation valve (1 valve)	Yes	Yes	Yes	Yes	Yes	closed	closed	closed
Suppression pool exhaust line outboard isolation valve (1 valve)	Yes	Yes	Yes	Yes	Yes	closed	closed	closed
Suppression pool exhaust line to Stack outboard isolation valve (1 valve)	Yes	Yes	Yes	Yes	Yes	closed	closed	closed
Containment atmospheric bleed line outboard isolation valve (1 valve)	Yes	Yes	Yes	Yes	Yes	closed	closed	closed
Containment atmospheric bleed line outboard isolation valve (1 valve)	Yes	Yes	Yes	Yes	Yes	closed	closed	closed
Suppression pool exhaust line to Stack outboard isolation valve (1 valve)	Yes	Yes	Yes	Yes	Yes	closed	closed	closed

Table 2.15.1-1a

Containment System Penetrations[1] and Equipment

Equipment Name	ASME Code Section III	Seismic Cat. I	Remote Manual Operation	Safety-Related	Containment Isolation Signal	Normal Position	Post-Accident Position	Loss of Motive Power Position
Containment Monitoring								
Total 2 Penetrations (One penetration per DW sample line)								
DW to Sample Rack inboard valve (2 valves)	Yes	Yes	Yes	Yes	Yes	open	open	open
DW to Sample Rack outboard valve (2 valves)	Yes	Yes	Yes	Yes	Yes	open	open	open
Total 2 Penetrations (One penetration per WW sample line)								
WW to Sample Rack inboard valve (2 valves)	Yes	Yes	Yes	Yes	Yes	open	open	open
WW to Sample Rack outboard valve (2 valves)	Yes	Yes	Yes	Yes	Yes	open	open	open
Total 2 Penetrations (One penetration per WW gas sample return line)								
Gas Sample Return to WW inboard valve (2 valves)	Yes	Yes	Yes	Yes	Yes	open	open	open
Gas Sample Return to WW outboard valve (2 valves)	Yes	Yes	Yes	Yes	Yes	open	open	open
Equipment and Floor Drain								
Total 1 Penetrations (One penetration per DW equipment drain Low Conductivity Waste (LCW) sump discharge line)								
DW equipment drain LCW sump discharge line inboard isolation valve (1 valve)	Yes	Yes	Yes	Yes	Yes	closed	closed	closed

Table 2.15.1-1a

Containment System Penetrations[1] and Equipment

Equipment Name	ASME Code Section III	Seismic Cat. I	Remote Manual Operation	Safety-Related	Containment Isolation Signal	Normal Position	Post-Accident Position	Loss of Motive Power Position
DW equipment drain LCW sump discharge line outboard isolation valve (1 valve)	Yes	Yes	Yes	Yes	Yes	closed	closed	closed
Total 1 Penetrations (One penetration per DW equipment drain High Conductivity Waste (HCW) sump discharge line)								
DW floor drain HCW sump discharge line inboard isolation valve (1 valve)	Yes	Yes	Yes	Yes	Yes	closed	closed	closed
DW floor drain HCW sump discharge line outboard isolation valve (1 valve)	Yes	Yes	Yes	Yes	Yes	closed	closed	closed

[1] Includes associated piping between containment isolation valves.

Table 2.15.1-1b

Containment Mechanical Equipment

Equipment Name (Description)	Equipment Identifier See Figure 2.15.1-1	ASME Code Section III	Seismic Cat. I	RCPB Component	Containment Isolation Valve	Remotely Operated	Loss of Motive Power Position	MCR Alarms
Vacuum Breaker	11(A)	Yes	Yes	No	No	-	-	Yes
Vacuum Breaker Isolation Valve	11a(A)	Yes	Yes	No	No	Yes	As-is	Yes
Vacuum Breaker	11(B)	Yes	Yes	No	No	-	-	Yes
Vacuum Breaker Isolation Valve	11a(B)	Yes	Yes	No	No	Yes	As-is	Yes
Vacuum Breaker	11(C)	Yes	Yes	No	No	-	-	Yes
Vacuum Breaker Isolation Valve	11a(C)	Yes	Yes	No	No	Yes	As-is	Yes

Table 2.15.1-1c

Electrical Equipment

Equipment Name (Description)	Equipment Identifier See Figure 2.15.1-1	Control Q-DCIS/ DPS	Seismic Category I	Safety-Related	Safety-Related Display	Active Safety Function	Remotely Operated	Containment Isolation Valve Actuator
Vacuum Breaker	11(A)	-	Yes	Yes	Yes	Open/Close	No	No
Vacuum Breaker Isolation Valve	11a(A)	Yes/No	Yes	Yes	Yes	Close	Yes	No
Vacuum Breaker	11(B)	-	Yes	Yes	Yes	Open/Close	No	No
Vacuum Breaker Isolation Valve	11a(B)	Yes/No	Yes	Yes	Yes	Close	Yes	No
Vacuum Breaker	11(C)	-	Yes	Yes	Yes	Open/Close	No	No
Vacuum Breaker Isolation Valve	11a(C)	Yes/No	Yes	Yes	Yes	Close	Yes	No
Vacuum Breaker Isolation Function Independent Control Platform	-	Yes/No	Yes	Yes	Yes	Close Vacuum Breaker Isolation Valves on demand	Yes	No

Table 2.15.1-1d

Containment System Penetration Isolation Valve Closure Times

Equipment Name	Closure Time (sec)[1]
Nuclear Boiler	
Inboard main steam isolation valve (MSIV) (4 valves)	3 - 5 sec
Outboard MSIV (4 valves)	3 - 5 sec
Inboard MSIV upstream drain line inboard containment isolation valve (1 valve)	15 sec max
Inboard MSIV upstream drain line outboard containment isolation valve (1 valve)	15 sec max
Outboard MSIV upstream drain line outboard containment isolation valve (4 valves)	15 sec max
FW supply line second outboard containment isolation valve (2 valves)	10 - 15 sec
FW supply line outboard containment isolation valve (2 valves)	10 - 15 sec
FW supply line inboard containment isolation valve (2 valves)	–
RWCU/SDC to Feedwater outboard containment isolation valve (2 valves)	–
Isolation Condenser	
Steam supply line inboard isolation valve (4 valves)	60 sec max
Steam supply line outboard isolation valve (4 valves)	60 sec max
Condensate return line inboard isolation valve (4 valves)	35 sec max
Condensate return line outboard isolation valve (4 valves)	35 sec max
Condenser upper header inboard vent valve (4 valves)	15 sec max
Condenser upper header outboard vent valve (4 valves)	15 sec max
Condenser lower header inboard vent valve (4 valves)	15 sec max
Condenser lower header outboard vent valve (4 valves)	15 sec max
Bypass lower header inboard vent valve (4 valves)	–
Bypass lower header outboard vent valve (4 valves)	15 sec max

Table 2.15.1-1d

Containment System Penetration Isolation Valve Closure Times

Equipment Name	Closure Time (sec)[1]
Condenser purge line inboard isolation valve (4 valves)	15 sec max
Condenser purge line outboard isolation valve (4 valves)	–
Standby Liquid Control	
SLC injection line squib valve (4 valves)	–
SLC injection line outboard check valve (2 valves)	–
SLC injection line inboard check valve (2 valves)	–
Process Radiation Monitoring	
DW Fission Product Monitoring Line inboard isolation Valve (1 valve)	5 sec max
DW Fission Product Monitoring Line Outboard isolation Valve (1 valve)	5 sec max
DW Fission Product Monitoring Line Inboard isolation Valve (1 valve)	5 sec max
DW Fission Product Monitoring Line Outboard isolation Valve (1 valve)	5 sec max
Fuel and Auxiliary Pools Cooling	
Reactor well drain line containment inboard isolation valve (1 valve)	–
Reactor well drain line containment outboard isolation valve (1 valve)	–
GDCS pool return line outboard isolation valve (1 valve)	30 sec max
GDCS pool return line inboard isolation check valve (1 valve)	–
Suppression pool return line outboard isolation valve (2 valves)	30 sec max
Suppression pool return line inboard isolation check valve (2 valves)	–
DW spray line outboard isolation valve (1 valve)	35 sec max
DW spray line inboard isolation check valve (1 valve)	–
Suppression pool suction line outboard isolation valve (2 valves)	30 sec max
Suppression pool suction line outboard isolation valve (2 valves)	30 sec max

Table 2.15.1-1d

Containment System Penetration Isolation Valve Closure Times

Equipment Name	Closure Time (sec)[1]
GDCS pool suction line inboard isolation valve (1 valve)	30 sec max
GDCS pool suction line outboard isolation valve (1 valve)	30 sec max
Reactor Water Cleanup/Shutdown Cooling	
RWCU/SDC mid-vessel suction line inboard isolation valve (2 valves)	20 sec max
RWCU/SDC mid-vessel suction line outboard isolation valve (2 valves)	20 sec max
RWCU/SDC bottom head suction line inboard isolation valve (2 valves)	15 sec max
RWCU/SDC bottom head suction line outboard isolation valve (2 valves)	15 sec max
RWCU/SDC bottom head suction line sample line inboard isolation valve (2 valves)	15 sec max
RWCU/SDC bottom head suction line sample line outboard isolation valve (2 valves)	15 sec max
Chilled Water	
Chilled water supply line to DW cooler outboard isolation valve (2 valves)	30 sec max
Chilled water supply line to DW cooler inboard isolation valve (2 valves)	30 sec max
Chilled water return line from DW cooler inboard isolation valve (2 valves)	30 sec max
Chilled water return line from DW cooler outboard isolation valve (2 valves)	30 sec max
Makeup Water	
Demin water DW distribution system outboard containment isolation valve (1 valve)	–
Demin water DW distribution system inboard containment isolation valve (1 valve)	–
Service Air	
Service air system inboard containment isolation valve (1 valve)	–
Service air system outboard containment isolation valve (1 valve)	–

Table 2.15.1-1d

Containment System Penetration Isolation Valve Closure Times

Equipment Name	Closure Time (sec)[1]
High Pressure Nitrogen Gas Supply	
N2 supply line outboard isolation valve to ADS, SRV and ICIV accumulator (1 valve)	15 sec max
N2 supply line inboard isolation check valve to ADS, SRV and ICIV accumulator (1 valve)	–
N2 supply line outboard isolation valve to MSIV and other uses (1 valve)	15 sec max
N2 supply line inboard check valve to MSIV and other uses (1 valve)	–
Containment Inerting	
Air/N2 supply line to suppression pool outboard isolation valve (1 valve)	30 sec max
Air/N2 supply line to outboard isolation valve (1 valve)	30 sec max
Air/N2 supply line to upper DW outboard isolation valve (1 valve)	30 sec max
Lower DW exhaust line outboard isolation valve (1 valve)	30 sec max
Containment atmospheric exhaust line outboard isolation valve (1 valve)	30 sec max
Suppression pool exhaust line outboard isolation valve (1 valve)	30 sec max
Suppression pool exhaust line to Stack outboard isolation valve (1 valve)	–
Containment atmospheric bleed line outboard isolation valve (1 valve)	5 sec max
Containment atmospheric bleed line outboard isolation valve (1 valve)	5 sec max
Suppression pool exhaust line to Stack outboard isolation valve (1 valve)	–
N2 makeup line outboard isolation valve (1 valve)	5 sec max
N2 makeup line to suppression pool outboard isolation valve (1 valve)	5 sec max
N2 makeup line to upper DW outboard isolation valve (1 valve)	5 sec max
Containment Monitoring	
DW to Sample Rack inboard valve (2 valves)	–
DW to Sample Rack outboard valve (2 valves)	–

Table 2.15.1-1d

Containment System Penetration Isolation Valve Closure Times

Equipment Name	Closure Time (sec)[1]
WW to Sample Rack inboard valve (2 valves)	–
WW to Sample Rack outboard valve (2 valves)	–
Gas Sample Return to WW inboard valve (2 valves)	–
Gas Sample Return to WW outboard valve (2 valves)	–
Equipment and Floor Drain	
DW equipment drain (LCW) sump discharge line inboard isolation valve (1 valve)	–
DW equipment drain (LCW) sump discharge line outboard isolation valve (1 valve)	–
DW floor drain (HCW) sump discharge line inboard isolation valve (1 valve)	–
DW floor drain (HCW) sump discharge line outboard isolation valve (1 valve)	–

[1] This table is used for Acceptance Criteria only

Table 2.15.1-2

ITAAC For The Containment System

Design Commitment	Inspections, Tests, Analyses	Acceptance Criteria
1. The functional arrangement of the Containment System is as described in the Design Description of this Subsection 2.15.1 and as shown in Figure 2.15.1-1.	Inspections of the as-built system will be conducted.	The as-built Containment System conforms to the functional arrangement as described in Subsection 2.15.1 and Figure 2.15.1-1.
2a1. The components identified in Table 2.15.1-1 as ASME Code Section III are designed in accordance with ASME Code Section III requirements.	Inspection of ASME Code Design Reports (NCA 3550) and required documents will be conducted.	ASME Code Design Report(s) (certified, when required by ASME Code) exist for the components identified in Table 2.15.1-1 as ASME Code Section III and conclude compliance to NCA-3550, including those stresses applicable to loads related to fatigue (including environmental effects), thermal expansion, seismic, and combined.
2a2. The RCCV and its liners are designed to meet the requirements in Article CC-3000 of ASME Code, Section III, Division 2, and seismic Category I requirements. The steel components of the RCCV are designed to meet the requirements in Article NE-3000 of ASME Code, Section III, Division 1.	Inspection of ASME Code Design Report and certified documents for the RCCV and its liners, and for the steel components of the RCCV will be conducted.	ASME Code Design Report(s) (certified, when required by ASME Code) exist for the RCCV and its liners and steel components in accordance with ASME Code Section III, including those stresses applicable to loads related to fatigue (including environmental effects), thermal expansion, seismic, and combined.

Table 2.15.1-2

ITAAC For The Containment System

Design Commitment	Inspections, Tests, Analyses	Acceptance Criteria
2a3. The piping identified in Table 2.15.1-1 as ASME Code Section III is designed in accordance with ASME Code Section III requirements.	Inspection of ASME Code Design Reports (NCA 3550) and required documents for the piping will be conducted. {{Design Acceptance Criteria}}	ASME Code Design Report(s) (certified, when required by ASME Code) exist for the piping identified in Table 2.15.1-1 as ASME Code Section III and demonstrates compliance to NCA-3550, including those stresses applicable to loads related to fatigue (including environmental effects), thermal expansion, seismic, and combined. {{Design Acceptance Criteria}}
2b1. The design of the components identified in Table 2.15.1-1 as ASME Code Section III will be reconciled with the design requirements.	A reconciliation analysis of the components using as-designed and as-built information and ASME Code Design Reports (NCA 3550) will be conducted.	The as-built components are reconciled with the design documents used for design analysis. For ASME Code Components, the reconciliation report includes comparison to the ASME Code Design Report (NCA-3550) (certified, when required by ASME Code) and documents the results of the reconciliation analysis.

Table 2.15.1-2

ITAAC For The Containment System

Design Commitment	Inspections, Tests, Analyses	Acceptance Criteria
2b2. The RCCV and its liners are designed to meet the requirements in Article CC-3000 of ASME Code, Section III, Division 2, and seismic Category I requirements. The steel components of the RCCV are designed to meet the requirements in Article NE-3000 of ASME Code, Section III, Division 1. The design of these components will be reconciled with the design requirements.	A reconciliation analysis of the RCCV and its liners and steel components using as-designed and as-built information and ASME Code Design Reports will be conducted.	The as-built components are reconciled with the design documents used for design analysis. For ASME Code Components, the reconciliation report includes comparison to the ASME Code Design Report (certified, when required by ASME Code) and documents the results of the reconciliation analysis.
2b3. The as-built piping identified in Table 2.15.1-1 as ASME Code Section III shall be reconciled with the piping design requirements.	A reconciliation analysis of the piping using the as-designed and as-built information and ASME Code Design Reports (NCA 3550) will be conducted.	The as-built piping has been reconciled with the design documents used for design analysis. The reconciliation report includes comparison to the ASME Code Design Reports (NCA-3550) (certified, when required by ASME Code) and documents the results of the reconciliation analysis.

Table 2.15.1-2

ITAAC For The Containment System

Design Commitment	Inspections, Tests, Analyses	Acceptance Criteria
2c1. The components identified in Table 2.15.1-1 as ASME Code Section III are fabricated, installed, and inspected in accordance with ASME Code Section III requirements.	Inspections of the components will be conducted.	ASME Code Data Report(s) (including N-5 Data reports, where applicable) (certified, when required by ASME Code) and inspection reports exist and conclude that the components identified in Table 2.15.1-1 as ASME Code Section III are fabricated, installed, and inspected in accordance with ASME Code Section III requirements.
2c2. The RCCV and its liners are fabricated, installed, and inspected in accordance with the requirements in Article CC-3000 of ASME Code, Section III, Division 2. The steel components of the RCCV are fabricated, installed, and inspected to meet the requirements in Article NE-3000 of ASME Code, Section III, Division 1.	Inspection of the ASME Code Section III documents for as-built components and piping, for the RCCV and its liners, and for the steel components of the RCCV will be conducted.	ASME Code Report(s) (certified, when required by ASME Code) exist and conclude that ASME Code Section III stress report(s) exist for the as-built RCCV and its liners and steel components. ASME Code Report(s) exist and conclude that for ASME Section III, Division 2 construction, ASME Code Section III stress reports demonstrate compliance to NCA-3350 through NCA-3380, and NCA-3454. ASME Code Report(s) exist and conclude that for ASME Section III, Division 1 construction, ASME Code Section III stress reports demonstrate compliance to NCA-3350. ASME code inspection reports document results of inspections.

Table 2.15.1-2

ITAAC For The Containment System

Design Commitment	Inspections, Tests, Analyses	Acceptance Criteria
2c3. The piping identified in Table 2.15.1-1 as ASME Code Section III is fabricated, installed, and inspected in accordance with ASME Code Section III requirements.	Inspection of ASME Code Section III documents for as-built will be conducted.	ASME Code Report(s) (certified, when required by ASME Code) exist and conclude that an ASME Code Section III stress report(s) exist for the as-built piping identified in Table 2.15.1-1 as ASME Code Section III. ASME Code Report(s) exist and conclude that for ASME Section III, Division 2 construction, ASME Code Section III stress reports demonstrate compliance to NCA-3350 through NCA-3380, and NCA-3454. ASME Code Report(s) exist and conclude that for ASME Section III, Division 1 construction, ASME Code Section III stress reports demonstrate compliance to NCA-3350. ASME code inspection reports document results of inspections.
3a. Pressure boundary welds in components identified in Tables 2.15.1-1a and 2.15.1-1b as ASME Code Section III meet ASME Code Section III non-destructive examinations requirements.	Inspection of the as-built pressure boundary welds will be performed in accordance with ASME Code Section III.	ASME Code Report(s) exist and conclude that the ASME Code Section III requirements are met for non-destructive examination of pressure boundary welds in the Containment System.

Table 2.15.1-2

ITAAC For The Containment System

Design Commitment	Inspections, Tests, Analyses	Acceptance Criteria
3b. Pressure boundary welds in piping identified in Tables 2.15.1-1a and 2.15.1-1b as ASME Code Section III meet ASME Code Section III non-destructive examination requirements.	Inspection of the as-built pressure boundary welds will be performed in accordance with ASME Code Section III.	ASME Code Report(s) exist and conclude that the ASME Code Section III requirements are met for non-destructive examination of pressure boundary welds in the Containment System.
4. The components and piping identified in Tables 2.15.1-1a and 2.15.1-1b as ASME Code Section III retain their pressure boundary integrity at their design pressure.	i. A hydrostatic pressure test will be performed on the components and piping required by the ASME Code Section III to be tested. ii. Impact testing will be performed on the containment and pressure-retaining materials in accordance with the ASME Code Section III to confirm the fracture toughness of the materials.	i. ASME Code report exists and concludes that the results of the hydrostatic pressure test of the components and piping identified in Tables 2.15.1-1a and 2.15.1-1b as ASME Code Section III comply with the requirements of the ASME Code Section III. ii. ASME Code report exists and concludes that the containment and pressure-retaining penetration materials comply with fracture toughness requirements of the ASME Code Section III.
5. The Seismic Category I equipment identified in Tables 2.15.1-1a, 2.15.1-1b, and 2.15.1-1c can withstand Seismic Category I loads without loss of safety-related function.	i. Inspections will be performed to verify that the Seismic Category I equipment identified in Tables 2.15.1-1a, 2.15.1-1b and 2.15.1-1c is located in a Seismic Category I structure.	i. The Seismic Category I equipment identified in Tables 2.15.1-1a, T2.15.1-1b, and 2.15.1-1c is housed in a Seismic Category I structure.

Table 2.15.1-2

ITAAC For The Containment System

Design Commitment	Inspections, Tests, Analyses	Acceptance Criteria
	ii. Type tests, analyses, or a combination of type tests and analyses of Seismic Category I equipment identified in Tables 2.15.1-1a, 2.15.1-1b and 2.15.1-1c, will be performed using analytical assumptions, or under conditions which bound the Seismic Category I design requirements.	ii. The Seismic Category I equipment identified in Tables 2.15.1-1a, 2.15.1-1b and 2.15.1-1c can withstand Seismic Category I loads without loss of safety function.
	iii. Inspections and analyses will be performed to verify that the as-built equipment, including anchorage, identified in Tables 2.15.1-1a, 2.15.1-1b and 2.15.1-1c, is bounded by the tested or analyzed conditions.	iii. The as-built equipment, including anchorage, identified in Tables 2.15.1-1a, 2.15.1-1b, and 2.15.1-1c , can withstand Seismic Category I loads without loss of safety function.
6a. The electrical safety-related components associated with actuation and status monitoring of final control elements of the Containment System equipment listed in Tables 2.15.1-1a, 2.15.1-1b, and 2.15.1-1c receive power from their respective safety-related divisional power supplies.	Test(s) will be performed for the electrical safety-related components for the equipment of the Containment System listed in Tables 2.15.1-1a, 2.15.1-1b, and 2.15.1-1c by providing a test signal in only one safety-related division at a time.	The electrical components in a singular division for the equipment of the Containment System listed in Tables 2.15.1-1a, 2.15.1-1b, and 2.15.1-1c receive power from a safety-related power supply in the same division.
6b. Separate electrical penetrations are provided for circuits of each safety-related division and for nonsafety-related circuits.	Inspection of the as-built electrical containment penetrations will be performed.	Each as-built electrical penetration contains cables of only one division or contains nonsafety-related cables.

Table 2.15.1-2

ITAAC For The Containment System

Design Commitment	Inspections, Tests, Analyses	Acceptance Criteria
6c. The circuits of each electrical penetration are of the same voltage class.	Inspections of the as-built containment electrical penetrations will be performed.	Each as-built circuit of each electrical penetration is of the same voltage class.
7. The containment system provides a barrier against the release of fission products to the atmosphere.	Perform Type A, B and C leak rate tests in accordance with 10 CFR 50 Appendix J.	Leak rates are less than the acceptance criterion established per 10 CFR 50 Appendix J.
8. The containment system pressure boundary retains its structural integrity when subject to design pressure.	A Structural Integrity Test (SIT) of the containment structure is performed in accordance with Article CC-6000 of ASME Code Section III, Division 2 and Regulatory Guide 1.136, after completion of the containment construction. The first prototype containment structure will be instrumented to measure strains per ASME Code Section III, Division 2, CC-6370.	The containment system pressure boundary retains its structural integrity when tested and evaluated in accordance with ASME Code Section III, Division 2 at a test pressure of at least 115% of the design pressure of 310 kPaG (45 psig).
9. The containment system provides the safety function of containment isolation for containment boundary integrity.	i. Tests will be performed to demonstrate that containment isolation valves close within the required response times.	i. The containment isolation valves close within the required response times identified in Table 2.15.1-1d.

Table 2.15.1-2

ITAAC For The Containment System

Design Commitment	Inspections, Tests, Analyses	Acceptance Criteria
	ii. Tests will be performed to demonstrate that remote manual operated containment isolation valves reposition to the required post-accident position using real or simulated containment isolation signals.	ii. The remote manual operated valves identified in Table 2.15.1-1a as having a containment isolation signal reposition to the required post-accident state after receiving a containment isolation signal.
	iii. Exercise testing of the process actuated check valves identified in Table 2.15.1-1a will be performed under preoperational test pressure, temperature and fluid flow conditions.	iii. Each as-built process actuated check valve changes position as indicated in Table 2.15.1-1a.
	iv. Tests will be performed to demonstrate that the lower drywell equipment and personnel hatches can be closed from outside the drywell.	iv. The lower drywell equipment and personnel hatches are able to be closed from outside the lower drywell, and a program in place to track the status of each hatch while open during MODE 5 and 6 operation.
	v. Testing of the as-built valves will be performed under the conditions of loss of motive power.	v. After a loss of motive power, each remote manual valve identified in Table 2.15.1-1a assumes the indicated loss of motive power position.

Table 2.15.1-2

ITAAC For The Containment System

Design Commitment	Inspections, Tests, Analyses	Acceptance Criteria
10. Containment electrical penetration assemblies, whose maximum available fault current (including failure of upstream devices) is greater than the continuous rating of the penetration, are protected against currents that are greater than the continuous ratings.	An analysis of the as-built containment electrical penetration assemblies will be performed to demonstrate either (1) the maximum over current of the circuits does not exceed the continuous current rating of the penetration, or (2) circuits whose maximum available fault currents are greater than the continuous current rating of the penetration are provided with redundant over current interrupting devices.	Analysis exists for the as-built containment electrical penetration assemblies and concludes that the penetrations, whose maximum available fault current (including failure of upstream devices) is greater than the continuous rating of the penetration, are protected against currents that are greater than their continuous ratings.
11. (Deleted)		
12. The amount of chlorine bearing cable insulation exposed to the containment atmosphere is limited.	Analyses and inspection will be used to confirm the final exposed chlorine bearing cable insulation mass.	The amount of chlorine bearing cable insulation exposed to the containment atmosphere (i.e. not within an enclosed cable tray, pipe, conduit, or metal cable jacketing) is ≤ 3400 kg (7500 lbs).
13. The DW and WW volumes are adequately sized to accommodate the calculated maximum DW temperature and absolute pressure that are postulated to occur as a result of a design basis accident.	Using as-built dimensions, the DW and WW volumes will be calculated.	The as-built DW free gas volume is within the analyzed limits of the free gas volume assumed in the containment performance safety analysis; and the as-built WW free gas volume is greater than the analyzed limit of the free gas volume assumed in the containment performance safety-analysis.

Table 2.15.1-2

ITAAC For The Containment System

Design Commitment	Inspections, Tests, Analyses	Acceptance Criteria
14. The water volume of the WW is adequately sized to condense the steam that is forced into the WW from the DW due to a postulated design basis event.	Using as-built dimensions of the WW and a minimum measured suppression pool depth of 5.4 meters (213 inches), the volume of the suppression pool will be calculated.	The calculated suppression pool water volume is equal to or greater than the water volume assumed in the containment performance safety analysis.
15. Each vacuum breaker isolation valve automatically closes if the vacuum breaker does not fully close when required.	A test will be performed by providing a simulated or real not-fully closed vacuum breaker signal originating from the closed position proximity sensor and temperature sensors to close the associated vacuum breaker isolation valve.	Each as-built vacuum breaker isolation valve automatically closes when a simulated or real not-fully closed signal is provided from the closed position proximity sensor of its associated vacuum breaker.
16a. Each vacuum breaker has proximity sensors to detect open/close position. This indication is available in the main control room.	Testing will be performed with each as-built vacuum breaker to demonstrate that the proximity sensors indicate open and closed position. An inspection will be performed in the MCR.	Each as-built vacuum breaker proximity sensor indicates an open position with the vacuum breaker open and indicates a closed position when the vacuum breaker is in the fully closed position. The open and closed position indications of the as-built vacuum breakers are available in the main control room.
16b. Each vacuum breaker has temperature sensors to detect bypass leakage at design basis accident conditions. This indication is available in the main control room.	A type test will be performed on a vacuum breaker to detect bypass leakage at simulated design basis accident conditions. An inspection will be performed in the MCR.	Vacuum breaker temperature sensors discriminate within the range of ≥ 0.3 cm^2 and ≤ 0.6 cm^2 $(A/\sqrt{K})$ of bypass leakage area at design basis accident conditions. Indication exists in the MCR.

Table 2.15.1-2

ITAAC For The Containment System

Design Commitment	Inspections, Tests, Analyses	Acceptance Criteria
17. The containment penetration isolation design for each fluid piping system requiring isolation meets the single-failure criterion to ensure completion of penetration isolation.	Single-failure analysis is performed on the isolation design of each fluid system penetration class or penetration, as applicable.	A study of all applicable containment fluid system penetrations demonstrates that, for each penetration or penetration class isolation design, the single-failure criterion is satisfied.
18. DW to WW bypass leakage is less than the assumed value used in the containment capability design basis containment response analysis.	A DW to WW bypass leakage test will be conducted.	The results of the DW to WW bypass leakage is less than or equal to 50% of the assumed value in the containment capability design basis containment response analysis.
19. Total DW to WW vacuum breaker bypass pathway leakage is less than the assumed value used in the containment capability design basis containment response analysis.	A DW to WW bypass leakage test will be conducted for each vacuum breaker and associated vacuum breaker isolation valve.	The results of the total DW to WW vacuum breaker bypass pathway leakage is less than or equal to 35% of the assumed value in the containment capability design basis containment response analysis.
20. Each vacuum breaker opening differential pressure is less than or equal to the required opening differential pressure.	An opening differential pressure test will be conducted for each vacuum breaker.	The results of the opening differential pressure test is less than or equal to 3.07 kPa (0.445 psi).
21. Each vacuum breaker closing differential pressure is greater than or equal to the required closing differential pressure.	A closing differential pressure test will be conducted for each vacuum breaker.	The vacuum breaker closing differential pressure is greater than or equal to 2.21 kPa (0.320 psi).

Table 2.15.1-2

ITAAC For The Containment System

Design Commitment	Inspections, Tests, Analyses	Acceptance Criteria
22a. Containment isolation valves are located as close to the containment as practical, consistent with General Design Criteria 55, 56 and 57.	Inspection of piping design isometric drawings will be conducted. {{Design Acceptance Criteria}}	Based on a review of piping design isometric drawings, containment isolation valves are designed to be located as close to containment as practical, considering required access for: • In-service inspection of non-isolable welds, • 10CFR50 Appendix J leak testing, • Cutout and replacement of isolation valves using standard pipe fitting tools and equipment, • Local control, and • Valve seat resurfacing in place. {{Design Acceptance Criteria}}
22b. The as-built location of containment isolation valves relative to containment shall be reconciled with design requirements.	A reconciliation evaluation of containment isolation valve locations relative to containment using as-designed and as-built information will be performed.	A design reconciliation has been completed for the as-built locations of containment isolation valves relative to the design requirements. The report documents the results of the reconciliation evaluation.

Table 2.15.1-2

ITAAC For The Containment System

Design Commitment	Inspections, Tests, Analyses	Acceptance Criteria
23a. The containment boundary electric penetration assemblies are designed in accordance with ASME Boiler and Pressure Vessel Code, Division 1, Section III, Subsection NE for Class MC Components.	Inspection of ASME Code Certified Design Reports and required documents will be conducted.	ASME Code Certified Design Report(s) exist and conclude that the design of the containment boundary electric penetration assemblies comply with the requirements of the ASME Boiler and Pressure Vessel Code, Division 1, Section III, Subsection NE for Class MC Components, including for those stresses and loads related to seismic and electromagnetic forces produced by rated short-circuit currents.
23b. The containment boundary electric penetration assemblies shall be reconciled with the design requirements.	A reconciliation analysis of the components using as-designed and as-built information and ASME Code Certified Design Reports will be performed.	ASME Code Certified Design Report(s) exist and conclude that design reconciliation has been completed in accordance with the ASME Code for as-built reconciliation of the containment boundary electric penetration assemblies. The report documents the results of the reconciliation analysis.
23c. The containment boundary electric penetration assemblies are fabricated, installed, and inspected in accordance with ASME Boiler and Pressure Vessel Code, Division 1, Section III, Subsection NE for Class MC Components.	Inspection of the components will be conducted.	ASME Code Data Report(s) and Inspection Report(s) exist and conclude that the containment boundary electric penetration assemblies are fabricated, installed, and inspected in accordance with ASME Boiler and Pressure Vessel Code, Division 1, Section III, Subsection NE for Class MC Components.

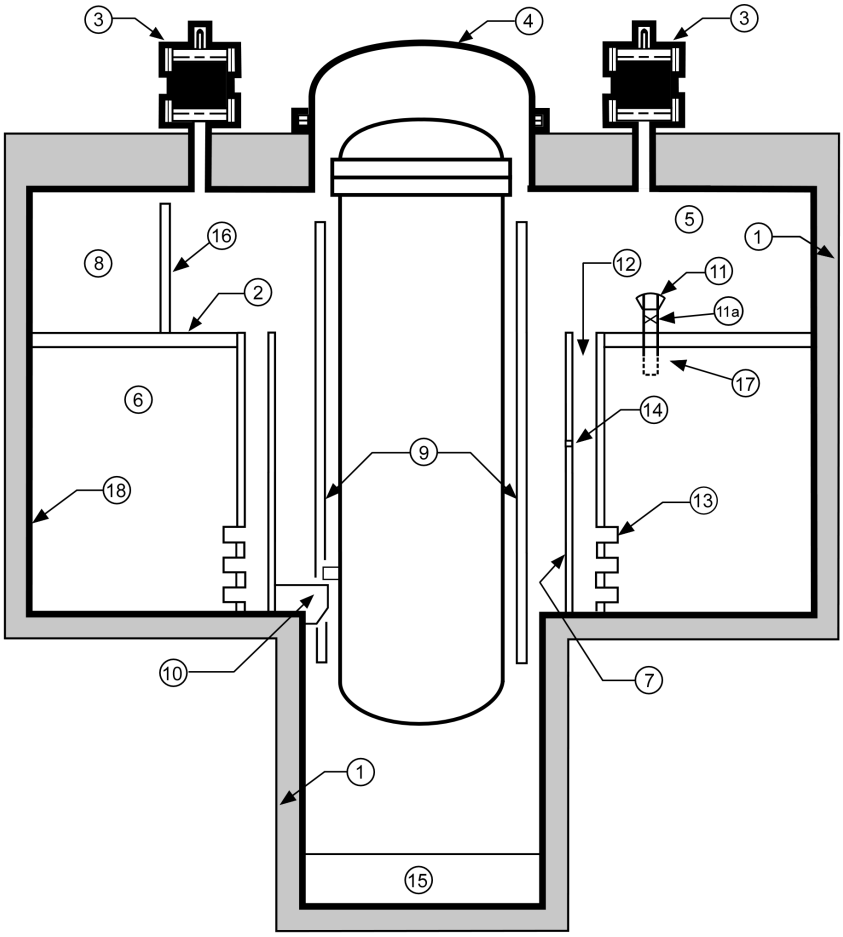

LEGEND

1. Reinforced Concrete Containment Vessel (RCCV)
2. Diaphragm Floor Slab, Distance from bottom of slab to the Wetwell Floor > 12150 mm (39.862 ft)
3. (6) Passive Containment Cooling System (PCCS) Heat Exchangers
4. Drywell Head
5. Drywell
6. Wetwell
7. Vent Wall
8. (3) GDCS Pools
9. Reactor Shield Wall
10. (8) RPV Support Brackets
11. (3) Vacuum Breakers, ≥ 0.0967 m^2 (1.041 ft^2) Each

11a. (3) Vacuum Breaker Isolation Valves, ≥ 0.0967 m^2 (1.041 ft^2) Each

12. (12) Vertical Vents, ≥ 13.6 m^2 (146 ft^2) Total
13. (36) Horizontal Vents, ≥ 0.7 m (2.30 ft) I. D.
    - Top Row (centerline) ≤ 3.5 m (11.48 ft) above wetwell floor
    - Middle Row (centerline) ≤ 2.13 m (6.99 ft) above wetwell floor
    - Bottom Row (centerline) ≤ 0.76 m (2.49 ft) above wetwell floor
14. (12) Spillover Holes, 200 mm (8 inch) Nominal Diameter, Elevation ≥ 12870 mm (42.225 ft)
15. BiMAC
16. GDCS Pool Wall (Typical)
17. Protective Shield/Debris Screen
18. Suppression Pool Stainless Steel Liner

Figure 2.15.1-1. Containment System

2.15.2 Containment Vessel

Design Description and ITAAC are addressed in Subsection 2.15.1.

2.15.3 Containment Internal Structures

Design Description

The functions of the containment internal structures include (1) support of the reactor vessel radiation shielding, (2) support of piping and equipment, and (3) formation of the pressure suppression boundary. The containment internal structures consist of the diaphragm floor slab that separates the DW and the WW, vent wall, Gravity-Driven Cooling System (GDCS) pool walls, reactor shield wall, and the Reactor Pressure Vessel (RPV) support bracket.

The Containment Internal Structures are as shown in Figure 2.15.3-1 and the component locations of the Containment System are as shown in Table 2.15.3-1.

(1) The functional arrangement of the Containment Internal Structures is described in the Design Description of Subsection 2.15.3.

(2) Containment Internal Structures identified in Table 2.15.3-1 are designed and constructed in accordance with ANSI/AISC N690 requirements.

(3) The Containment Internal Structures identified in Table 2.15.3-1 conform to Seismic Category I requirements and can withstand seismic design basis loads, suppression pool hydrodynamic loads, design basis loss of coolant accident generated loads and annulus pressurization loads without loss of structural integrity and safety function.

(4) (Deleted)

(5) The diaphragm floor and vent wall structures that separate the DW and WW retain their integrity when subjected to the maximum design differential pressure.

(6) (Deleted)

(7) (Deleted)

(8) (Deleted)

(9) The drywell floor drain sump channels prevent molten debris from an accident from entering the drywell sump.

Inspections, Tests, Analyses, and Acceptance Criteria

Table 2.15.3-2 provides a definition of the inspections, tests, and analyses, together with associated acceptance criteria for the Containment Internal Structures.

Table 2.15.3-1

Containment Internal Structures Locations

Component	Component Location
Diaphragm Floor Slab	Inside of Containment Boundary
Vent Wall	Inside of Containment Boundary
Gravity-Driven Cooling System (GDCS) Pool Walls	Inside of Containment Boundary
Reactor Shield Wall	Inside of Containment Boundary
RPV Support Bracket	Inside of Containment Boundary

Table 2.15.3-2

ITAAC For The Containment Internal Structures

Design Commitment	Inspections, Tests, Analyses	Acceptance Criteria
1. The functional arrangement of the Containment Internal Structures is described in the Design Description of Subsection 2.15.3.	Inspections of the as-built system will be conducted.	The as-built Containment Internal Structures conform with the Design Description in Subsection 2.15.3.
2. The Containment Internal Structures identified in Table 2.15.3-1 are designed and constructed in accordance with ANSI/AISC N690 requirements.	Inspection and analyses will be performed for the as-built components of the Containment Internal Structures identified in Table 2.15.3-1.	The as-built components of the Containment Internal Structures identified in Table 2.15.3-1 comply with ANSI/AISC N690 requirements.
3. The Containment Internal Structures identified in Table 2.15.3-1 conform to Seismic Category I requirements and can withstand seismic design basis loads, suppression pool hydrodynamic loads, design basis loss of coolant accident generated loads and annulus pressurization loads without loss of structural integrity and safety function.	i. Analyses will be performed on the Containment Internal Structures identified in Table 2.15.3-1 to ensure they meet Seismic Category I requirements and can withstand seismic design basis loads, suppression pool hydrodynamic loads, design basis loss of coolant accident generated loads and annulus pressurization loads without loss of structural integrity and safety function.	i. The as-built Containment Internal Structures identified in Table 2.15.3-1 can withstand seismic design basis dynamic loads, suppression pool hydrodynamic loads, design basis loss of coolant accident generated loads and annulus pressurization loads without loss of structural integrity and safety function.

Table 2.15.3-2

ITAAC For The Containment Internal Structures

Design Commitment	Inspections, Tests, Analyses	Acceptance Criteria
	ii. Inspections of the as-built Containment Internal Structures identified in Table 2.15.3-1 will be performed to verify that they are housed in a Seismic Category I structure.	ii. The as-built Containment Internal Structures identified in Table 2.15.3-1 are housed in a Seismic Category I structure.
4. (Deleted)		
5. The diaphragm floor and vent wall structures that separate the DW and WW retain their integrity when subjected to the maximum design differential pressure.	Part of the containment Structural Integrity Test specified in Table 2.15.1-2 ITAAC # 8 will test the diaphragm floor and vent wall structure with a test pressure equal to 1.0 times the maximum design differential pressure conducted with the DW pressure greater than WW pressure.	The Structural Integrity Test results demonstrate compliance with ASME Code Section III requirements for the applied test pressure for the containment structures.
6. (Deleted)		
7. (Deleted)		
8. (Deleted)		
9. The drywell floor drain sump channels prevent molten debris from an accident from entering the drywell sump.	Inspections and measurements of the drywell floor drain sump channels are performed.	The drywell floor sump channels are sized to preclude debris from passing to the sump.

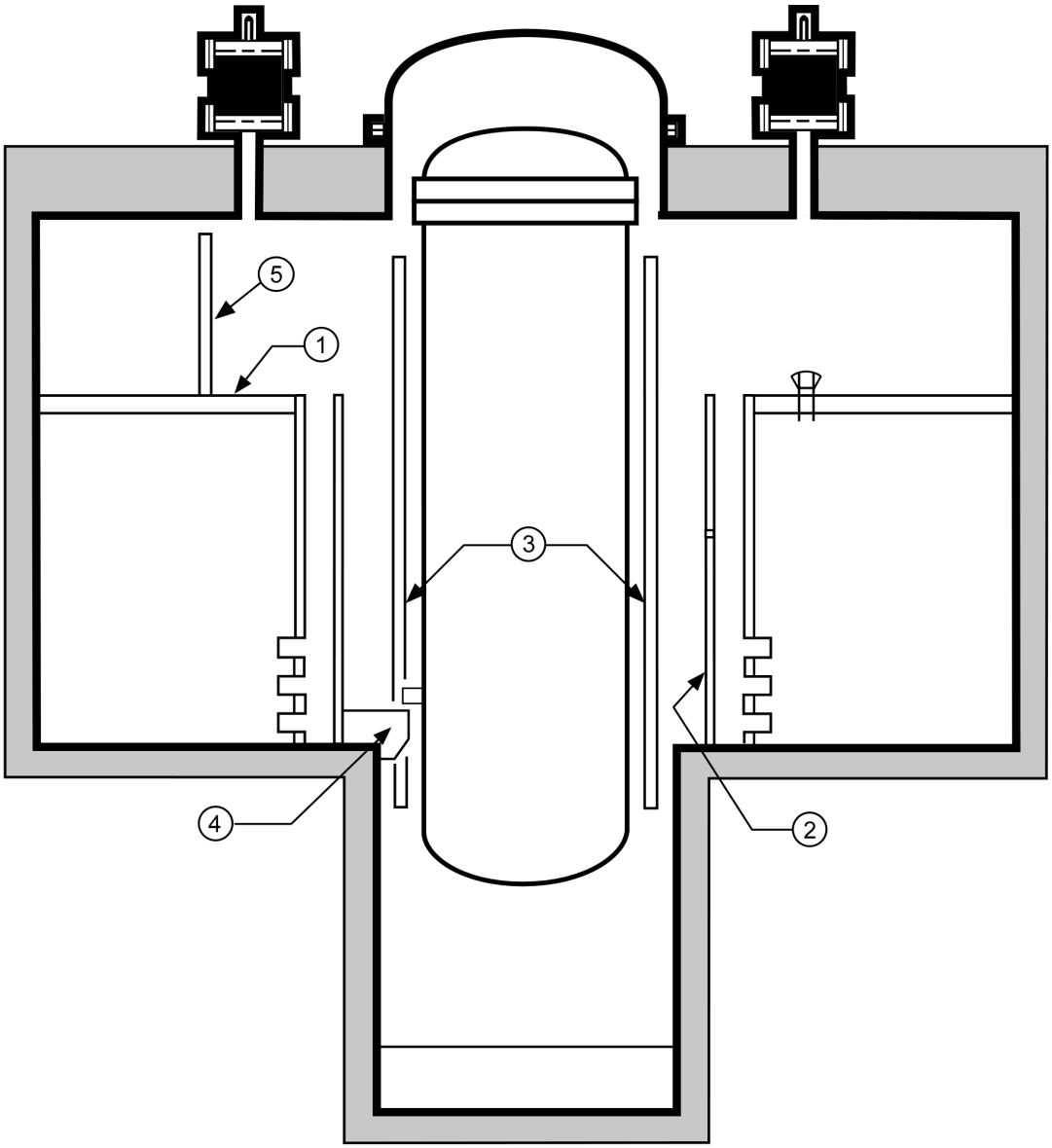

LEGEND

1. Diaphragm Floor Slab
2. Vent Wall
3. Reactor Shield Wall
4. RPV Support Bracket (Typical 8)
5. GDCS Pool Wall (Typical)

Figure 2.15.3-1. Containment Internal Structures

2.15.4 Passive Containment Cooling System

Design Description

The Passive Containment Cooling System (PCCS), in conjunction with the suppression pool, maintains the containment within its pressure limits for DBAs such as a LOCA, by condensing steam from the DW atmosphere and returning the condensed liquid to the Gravity Driven Cooling System (GDCS) pools. The system is passive, with no components that must actively function in the first 72 hours after a DBA.

The environmental qualification of PCCS components is addressed in Section 3.8.

(1) The functional arrangement for the PCCS is as described in the Design Description in this Subsection 2.15.4, Table 2.15.4-1 and Figure 2.15.4-1.

(2) a1. The components identified in Table 2.15.4-1 as ASME Code Section III are designed in accordance with ASME Code Section III requirements.

a2. The components identified in Table 2.15.4-1 as ASME Code Section III shall be reconciled with the design requirements.

a3. The components identified in Table 2.15.4-1 as ASME Code Section III are fabricated, installed, and inspected in accordance with ASME Code Section III requirements.

b1. The piping identified in Table 2.15.4-1 as ASME Code Section III is designed in accordance with ASME Code Section III requirements.

b2. The as-built piping identified in Table 2.15.4-1 as ASME Code Section III shall be reconciled with the piping design requirements.

b3. The piping identified in Table 2.15.4-1 as ASME Code Section III is fabricated, installed, and inspected in accordance with ASME Code Section III requirements.

(3) a. Pressure boundary welds in components identified in Table 2.15.4-1 as ASME Code Section III meet ASME Code Section III non-destructive examination requirements.

b. Pressure boundary welds in piping identified in Table 2.15.4-1 as ASME Code Section III meet ASME Code Section III non-destructive examination requirements.

(4) a. The components identified in Table 2.15.4-1 as ASME Code Section III retain their pressure boundary integrity at their design pressure.

b. The piping identified in Table 2.15.4-1 as ASME Code Section III retains its pressure boundary integrity at its design pressure.

(5) The equipment identified in Table 2.15.4-1 as Seismic Category I can withstand Seismic Category I loads without loss of safety function.

(6) Each mechanical train of the PCCS located inside the containment is physically separated from the other train(s) so as not to preclude accomplishment of the intended safety-related function.

(7) The PCCS together with the pressure suppression containment system will limit containment pressure to less than its design pressure for 72 hours after a LOCA.

(8) (Deleted)

(9) The elevation of the PCCS vent line discharge point is submerged in the suppression pool at an elevation below low water level and above the uppermost horizontal vent.

(10) The PCCS will be designed to limit the fraction of containment leakage through the condensers to an acceptable value.

(11) The PCCS vent fans flow rate is sufficient to meet the beyond 72 hours containment cooling requirements following a design basis LOCA.

(12) The PCCS vent fans can be remotely operated from the MCR.

(13) The PCCS drain piping is installed to allow venting of non-condensable gases from the PCCS drain lines to the PCCS condenser vent lines to prevent collection in the PCCS drain lines.

(14) The elevation of the PCCS vent fan discharge point is submerged within the drain pan located in the GDCS pool at an elevation below the lip of the drain pan.

Inspections, Tests, Analyses, and Acceptance Criteria

Table 2.15.4-2 provides a definition of the inspections, tests and analyses, together with associated acceptance criteria for the Passive Containment Cooling System.

Table 2.15.4-1

Passive Containment Cooling System Mechanical Equipment

Equipment Name (Description)	Equipment Identifier see Figure 2.15.4-1	ASME Code Section III	Seismic Cat. I	RCPB Component	Containment Isolation Valve	Remotely Operated Valve	Loss of Motive Power Position
PCCS Heat Condenser	PCCS Condenser	Yes	Yes	No	–	–	–
PCCS Inlet Line	P-1(A[1])	Yes	Yes	No	–	–	–
Condensate Drain Line	P-2(A[1])	Yes	Yes	No	–	–	–
Vent Fan Check Valve	Check Valve	Yes	Yes	No	–	–	–
Non-Condensables Vent Line	P-3(A[1])	Yes	Yes	No	–	–	–
Vent Fan	Vent Fan	No	No	No	–	–	–
Non-Condensables Vent Line Sparger	Sparger	No	Yes	No	–	–	–
PCCS Inlet Pipe Debris Filter	–	No	Yes	No	–	–	–
PCCS Vent Fan Line	P-4 (A[1])	Yes	No	No	–	–	–

[1] Train A; Typical for Trains B, C, D, E & F.

Table 2.15.4-2

ITAAC For The Passive Containment Cooling System

Design Commitment	Inspections, Tests, Analyses	Acceptance Criteria
1. The functional arrangement for the PCCS is as described in the Design Description in this Subsection 2.15.4, Table 2.15.4-1 and Figure 2.15.4-1.	Inspections of the as-built system will be conducted.	The as-built PCCS conforms to the functional arrangement for the PCCS as described in the Design Description in this Subsection 2.15.4, Table 2.15.4-1 and Figure 2.15.4-1.
2a1 The components identified in Table 2.15.4-1 as ASME Code Section III are designed in accordance with ASME Code Section III requirements.	Inspection of ASME Code Design Reports (NCA-3550) and required documents will be conducted.	ASME Code Design Reports (NCA-3550) (certified, when required by ASME Code) exist and conclude that the design of the components identified in Table 2.15.4-1 as ASME Code Section III complies with the requirements of ASME Code Section III including those stresses applicable to loads related to fatigue (including environmental effects), thermal expansion, seismic, hydrogen combustion, and combined.
2a2. The components identified in Table 2.15.4-1 as ASME Code Section III shall be reconciled with the design requirements.	A reconciliation analysis of the components identified in Table 2.15.4-1 as ASME Code Section III using as-designed and as-built information and ASME Code Design Reports (NCA-3550) will be performed.	ASME Code Design Report(s) (NCA-3550) (certified, when required by ASME Code) exist and conclude that design reconciliation has been completed, in accordance with ASME Code, for as-built reconciliation of the components identified in Table 2.15.4-1 as ASME Code Section III. The report documents the results of the reconciliation analysis.

Table 2.15.4-2

ITAAC For The Passive Containment Cooling System

Design Commitment	Inspections, Tests, Analyses	Acceptance Criteria
2a3. The components identified in Table 2.15.4-1 as ASME Code Section III are fabricated, installed, and inspected in accordance with ASME Code Section III requirements.	Inspection of the components identified in Table 2.15.4-1 as ASME Code Section III will be conducted.	ASME Code Data Report(s) (including N-5 Data Reports, where applicable) (certified, when required by ASME Code) and inspection reports exist and conclude that the components identified in Table 2.15.4-1 as ASME Code Section III are fabricated, installed, and inspected in accordance with ASME Code Section III requirements.
2b1. The piping identified in Table 2.15.4-1 as ASME Code Section III is designed in accordance with ASME Code Section III requirements.	Inspection of ASME Code Design Reports (NCA-3550) and required documents will be conducted. {{Design Acceptance Criteria}}	ASME Code Design Report(s) (NCA-3550) (certified, when required by ASME Code) exist and conclude that the design of the piping identified in Table 2.15.4-1 as ASME Code Section III complies with the requirements of the ASME Code, Section III, including those stresses applicable to loads related to fatigue (including environmental effects), thermal expansion, seismic, hydrogen combustion, and combined. {{Design Acceptance Criteria}}

Table 2.15.4-2

ITAAC For The Passive Containment Cooling System

Design Commitment	Inspections, Tests, Analyses	Acceptance Criteria
2b2. The as-built piping identified in Table 2.15.4-1 as ASME Code Section III shall be reconciled with the piping design requirements.	A reconciliation analysis of the piping identified in Table 2.15.4-1 as ASME Code Section III using as-designed and as-built information and ASME Code Design Reports (NCA-3550) will be performed.	ASME Code Design Report(s) (NCA-3550) (certified, when required by ASME Code) exist and conclude that design reconciliation has been completed, in accordance with ASME Code, for as-built reconciliation of the piping identified in Table 2.15.4-1 as ASME Code Section III. The report documents the results of the reconciliation analysis.
2b3. The piping identified in Table 2.15.4-1 as ASME Code Section III is fabricated, installed, and inspected in accordance with ASME Code Section III requirements.	Inspections of the piping identified in Table 2.4.2-1 as ASME Code Section III will be conducted.	ASME Code Data Report(s) (certified, when required by ASME Code) and inspection reports (including N-5 Data Reports where applicable) exist and conclude that the piping identified in Table 2.4.2-1 as ASME Code Section III is fabricated, installed, and inspected in accordance with ASME Code Section III requirements.
3a. Pressure boundary welds in components identified in Table 2.15.4-1 as ASME Code Section III meet ASME Code Section III non-destructive examination requirements.	Inspection of the as-built pressure boundary welds in components identified in Table 2.15.4-1 as ASME Code Section III will be performed in accordance with ASME Code Section III.	ASME Code report(s) exist and conclude that ASME Code Section III requirements are met for non-destructive examination of pressure boundary welds in components identified in Table 2.15.4-1 as ASME Code Section III.

Table 2.15.4-2

ITAAC For The Passive Containment Cooling System

Design Commitment	Inspections, Tests, Analyses	Acceptance Criteria
3b. Pressure boundary welds in piping identified in Table 2.15.4-1 as ASME Code Section III meet ASME Code Section III non-destructive examination requirements.	Inspection of the as-built pressure boundary welds in piping identified in Table 2.15.4-1 as ASME Code Section III will be performed in accordance with ASME Code Section III.	ASME Code report(s) exist and conclude that ASME Code Section III requirements are met for non-destructive examination of pressure boundary welds in piping identified in Table 2.15.4-1 as ASME Code Section III.
4a. The components identified in Table 2.15.4-1 as ASME Code Section III retain their pressure boundary integrity at their design pressure.	A hydrostatic test will be conducted on those code components identified in Table 2.15.4-1 as ASME Code Section III that are required to be hydrostatically tested by ASME Code Section III.	ASME Code Data Report(s) exist and conclude that the results of the hydrostatic test of components identified in Table 2.15.4-1 as ASME Code Section III comply with the requirements of ASME Code Section III.
4b. The piping identified in Table 2.15.4-1 as ASME Code Section III retains its pressure boundary integrity at its design pressure.	A hydrostatic test will be conducted on the code piping identified in Table 2.15.4-1 as ASME Code Section III that is required to be hydrostatically tested by ASME Code Section III.	ASME Code Data Report(s) exist and conclude that the results of the hydrostatic test of piping identified in Table 2.15.4-1 as ASME Code Section III comply with the requirements in ASME Code Section III.
5. The equipment identified in Table 2.15.4-1 as Seismic Category I can withstand Seismic Category I loads without loss of safety function.	i. Inspection will be performed to verify that the Seismic Category I equipment identified in Table 2.15.4-1 are located in a Seismic Category I structure.	i. The equipment identified as Seismic Category I in Table 2.15.4-1 is located in a Seismic Category I structure.

Table 2.15.4-2

ITAAC For The Passive Containment Cooling System

Design Commitment	Inspections, Tests, Analyses	Acceptance Criteria
	ii. Type tests, analyses, or a combination of type tests and analyses, of equipment identified in Table 2.15.4-1 as Seismic Category I, will be performed using analytical assumptions, or will be performed under conditions which bound the Seismic Category I equipment design requirements.	ii. The equipment identified in Table 2.15.4-1 as Seismic Category I can withstand Seismic Category I loads without loss of safety function.
	iii. Inspections and analyses will be performed to verify that the as-built equipment identified in Table 2.15.4-1, including anchorage, is bounded by the testing or analyzed conditions, including the hydrodynamic effects of surrounding water for submerged components.	iii. The as-built equipment identified in Table 2.15.4-1 including anchorage, can withstand Seismic Category I loads and the hydrodynamic effects of surrounding water for submerged components without loss of safety function.
6. Each mechanical train of the PCCS located inside the containment is physically separated from the other train(s) so as not to preclude accomplishment of the intended safety-related function.	Inspections or analysis will be conducted for each of the PCCS mechanical trains located inside the containment.	Each mechanical train of PCCS located inside containment is protected against design basis events and their direct consequences by spatial separation, barriers, restraints, or enclosures so as not to preclude accomplishment of the intended safety-related function.

Table 2.15.4-2

ITAAC For The Passive Containment Cooling System

Design Commitment	Inspections, Tests, Analyses	Acceptance Criteria
7. The PCCS together with the pressure suppression containment system will limit containment pressure to less than its design pressure for 72 hours after a LOCA.	Using prototype test data and as-built PCC unit information, an analysis will be performed to establish the heat removal capability of the PCC unit.	Analyzed containment pressure for 72 hours after a LOCA is less than containment design pressure, and the PCC unit heat removal capacity is no less than 11 MWt given the following conditions: • Pure saturated steam in the tubes at 308 kPa (44.7 psia) absolute and 134˚C (273˚F) • IC/PCCS pool water temperature is at atmospheric pressure and 102˚C (216˚F)
8. (Deleted)		
9. The elevation of the PCCS vent discharge point is submerged in the suppression pool at an elevation below low water level and above the uppermost horizontal vent.	A visual inspection will be performed of the PCCS vent discharge point relative to the horizontal vents.	The elevation of the discharge on the PCCS vent line is > 0.85 m (33.5 in) and < 0.90 m (35.4 in) above the top of the uppermost horizontal vent.
10. The PCCS will be designed to limit the fraction of containment leakage through the condensers to an acceptable value.	A pneumatic leakage test of the PCCS will be conducted.	The combined leakage from each of the PCCS heat exchangers is ≤0.01% of containment air weight per day.

Table 2.15.4-2

ITAAC For The Passive Containment Cooling System

Design Commitment	Inspections, Tests, Analyses	Acceptance Criteria
11. The PCCS vent fans flow rate is sufficient to meet the beyond 72 hours containment cooling requirements following a design bases LOCA.	For each PCCS vent fan line, a flow rate test will be performed with the containment at pre-operational ambient conditions. Flow measurements will be taken on flow to the GDCS pools. An analysis of the test configuration will be performed.	• The tested and analyzed flow rates are greater than or equal to the flow rates of the design basis LOCA containment analysis model for the PCCS vent fan lines at containment pre-operational ambient conditions.
12. The PCCS vent fans can be remotely operated from the MCR.	PCCS vent fans will be started using manually initiated signals from the MCR.	The PCCS vent fans start when manually initiated signals are sent from the MCR.
13. The PCCS drain piping is installed to allow venting of non-condensable gases from the PCCS drain lines to the PCCS condenser vent lines to prevent collection in the PCCS drain lines.	Inspection(s) will be conducted of as-built PCCS drain piping to ensure there are no elevated piping loops or high-point traps in piping runs to the GDCS pools.	Based on inspection(s) of as-built PCCS drain piping, the as-built piping conforms to a design that allows venting of non-condensable gases from the PCCS drain lines to the PCCS condenser vent lines.
14. The elevation of the PCCS vent fan discharge point is submerged within the drain pan located in the GDCS pool at an elevation below the lip of the drain pan.	A visual inspection will be performed of the PCCS vent fan discharge point relative to the lip of the drain pan.	The elevation of the discharge on the PCCS vent fan line is 24 cm (9.4 in) below the top of the drain pan lip with a tolerance of 1.4 cm (0.6 in).

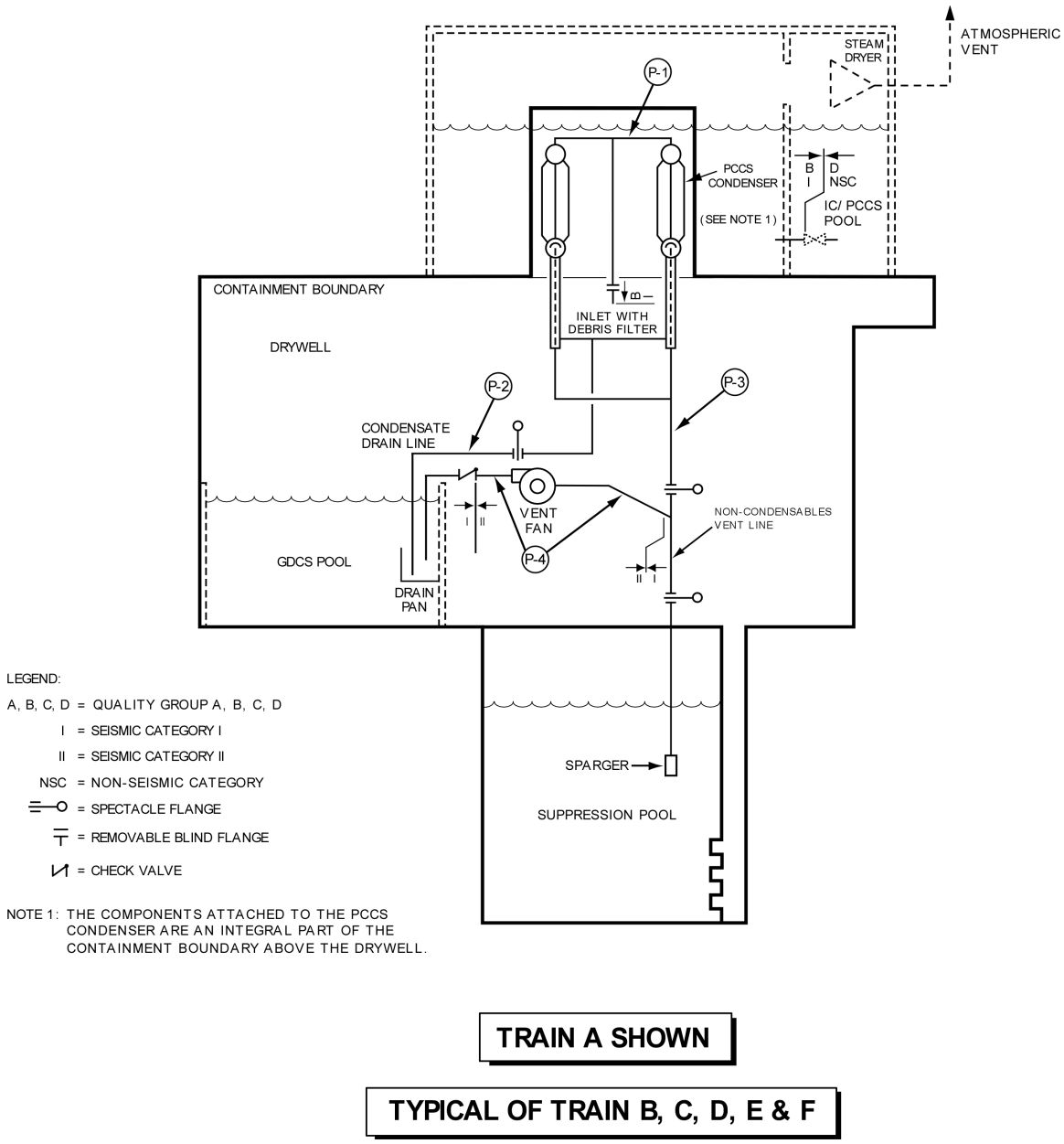

Figure 2.15.4-1. Passive Containment Cooling System Schematic

2.15.5 Containment Inerting System

Design Description

The Containment Inerting System (CIS) establishes and maintains an inert atmosphere within the containment during all plant operating modes, except during plant shutdown for refueling or equipment maintenance and during limited periods of time to permit access for inspection at low reactor power. The objective of the system is to reduce oxygen concentration to levels that do not support post-accident hydrogen combustion. The CIS also provides instruments and logic for MCR monitoring and alarming of DW temperature described in Table 2.15.5-1 associated with ITAAC (3) below.

The CIS does not perform any safety-related function except for its containment isolation function. Containment isolation valves and penetrations are addressed in Subsection 2.15.1 for the Containment System.

(1) The containment can be inerted to less than or equal to 4% oxygen by volume.

(2) (Deleted)

(3) The DW temperature indications are retrievable in the main control room.

Inspections, Tests, Analyses, and Acceptance Criteria

Table 2.15.5-2 provides a definition of the inspections, test and analyses, together with associated acceptance criteria for the Containment Inerting System.

Table 2.15.5-1

Containment Inerting System Electrical Equipment

Equipment Name	Equipment ID	Control Q-DCIS/ DPS	Safety-Related Electrical Equipment	Safety-Related Display	Active Function	Loss of Motive Power Position	Remotely Operated Valve	Containment Isolation Valve
DW Temperature Transmitters(s)	–	No	No	No	No	–	–	–

Table 2.15.5-2

ITAAC For The Containment Inerting System

Design Commitment	Inspections, Tests, Analyses	Acceptance Criteria
1. The containment can be inerted to less than or equal to 4% oxygen by volume.	Test of the containment in an inerted state will be conducted to determine oxygen concentration by volume.	The containment can be inerted to less than or equal to 4% oxygen by volume.
2. (Deleted)		
3. The DW temperature indications are retrievable in the main control room.	Inspections of main control room indications will be conducted and verified for retrievability of DW temperature indications.	The DW temperature indications are provided in the MCR.

2.15.6 Drywell Cooling System

Design Description

The Drywell Cooling System (DCS) does not perform or ensure any safety-related function, is not required to achieve or maintain safe shutdown, and is not subject to high regulatory oversight. Therefore the system is nonsafety-related and has no safety design basis.

Inspections, Tests, Analyses, and Acceptance Criteria

No ITAAC are required for this system.

Table 2.15.6-1

(Deleted)

Table 2.15.6-2

(Deleted)

2.15.7 Containment Monitoring System

Design Description

The Containment Monitoring System (CMS) provides instrumentation listed in Table 2.15.7-1 to monitor the following parameters:

- DW and WW Hydrogen and Oxygen concentrations
- DW and WW Gross Gamma Radiation levels
- DW and WW Pressures
- DW/WW Differential Pressure
- Upper DW Level
- Lower DW Level
- Suppression Pool Water Level
- Suppression Pool Temperature

Refer to Subsection 2.2.15 for "Instrumentation & Controls Compliance With IEEE Std. 603."

The environmental qualification of CMS components is addressed in Section 3.8; and the environmental and seismic qualification of digital instrumentation and controls equipment is addressed in Section 3.8.

The containment isolation portions of the CMS system are addressed in Subsection 2.15.1.

CMS software is developed in accordance with the software development program described in Section 3.2 as part of the SSLC/ESF software projects.

(1) The functional arrangement for the CMS is as described in the Design Description in this Subsection 2.15.7, Table 2.15.7-1 and Figure 2.15.7-1.

(2) Each of the safety-related components identified in Table 2.15.7-1 is powered from its respective safety-related division.

(3) Each CMS measured parameter in Table 2.15.7-1 will indicate the measured parameter and initiate separate alarms in the control room when values exceed applicable setpoints.

(4) The Hydrogen/Oxygen (H_2/O_2) monitoring subsystem of CMS is active during normal operation. Additional sampling capacity is automatically initiated by a LOCA signal for post-accident monitoring of oxygen and hydrogen content in the containment.

(5) In each CMS Suppression Pool Temperature Monitoring (SPTM) division, signals from the CMS SPTM temperature and the CMS suppression pool water narrow range transmitters are provided for the divisional RPS logic processors to calculate the suppression pool average temperature.

(6) The equipment identified in Table 2.15.7-1 as Seismic Category I can withstand Seismic Category I loads without loss of safety function.

(7) (Deleted)

(8) (Deleted)

(9) (Deleted)

Inspections, Tests, Analyses, and Acceptance Criteria

Table 2.15.7-2 provides the definitions of the inspections, tests, and analyses, together with associated acceptance criteria, which will be undertaken for the Containment Atmospheric Monitoring System and the suppression pool monitoring portions of CMS.

Table 2.15.7-1

Containment Monitoring System Electrical Equipment

Equipment Name	Equipment Identifier See Figure 2.15.7-1	Control Q-DCIS/ DPS[1]	Seismic Category I	Safety-Related	Safety-Related Display	Active Function	Remotely Operated	Containment Isolation Valve Actuator
DW Hydrogen Sampling Transmitter (2 divisional channels)	(H_2 Skid)	Yes	Yes	Yes	Yes	No	–	–
DW Oxygen Sampling Transmitter (2 divisional channels)	(O_2 Skid)	Yes	Yes	Yes	Yes	No	–	–
WW Hydrogen Sampling Transmitter (2 divisional channels)	(H_2 Skid)	Yes	Yes	Yes	Yes	No	–	–
WW Oxygen Sampling Transmitter (2 divisional channels)	(O_2 Skid)	Yes	Yes	Yes	Yes	No	–	–
Upper DW Gamma Radiation Transmitter (2 divisional channels)	RDT[2] (Upper DW)	No	No	No	No	No	–	–
Lower DW Gamma Radiation Transmitter (2 divisional channels)	RDT[2] (Lower DW)	No	No	No	No	No	–	–
WW Gamma Radiation Transmitter (2 divisional channels)	RDT[2] (WW)	No	No	No	No	No	–	–
DW Pressure Transmitter (Safety-related) (4 divisional channels)	PT[2] (DW)	Yes	Yes	Yes	Yes	No	–	–

Table 2.15.7-1

Containment Monitoring System Electrical Equipment

Equipment Name	Equipment Identifier See Figure 2.15.7-1	Control Q-DCIS/ DPS[1]	Seismic Category I	Safety-Related	Safety-Related Display	Active Function	Remotely Operated	Containment Isolation Valve Actuator
WW Pressure Transmitter (Safety-related) (4 divisional channels)	PT[2] (WW)	Yes	Yes	Yes	Yes	No	–	–
DW Pressure Wide Range Transmitter (Safety-related) (2 divisional channels)	PT[2] (DW)	Yes	Yes	Yes	Yes	No	–	–
WW Wide Range Pressure Transmitter (Safety-related)) (2 divisional channels)	PT[2] (WW)	Yes	Yes	Yes	Yes	No	–	–
DW Pressure Transmitter (Nonsafety-related) (4)	PT[2] (DW)	Yes	No	No	No	No	–	–
WW Pressure Transmitter (Nonsafety-related)	PT[2] (WW)	No	No	No	No	No	–	–
DW/WW Differential Pressure Transmitter (2 divisional channels)	PDT[2]	Yes	Yes	Yes	Yes	No	–	–
Upper DW Level Transmitter	LT[2] (Upper DW)	No	No	No	No	No	–	–
Lower DW Level Transmitter (4 divisional channels)	LT[2] (Lower DW)	Yes	Yes	Yes	Yes	No	–	–

Table 2.15.7-1

Containment Monitoring System Electrical Equipment

Equipment Name	Equipment Identifier See Figure 2.15.7-1	Control Q-DCIS/ DPS[1]	Seismic Category I	Safety-Related	Safety-Related Display	Active Function	Remotely Operated	Containment Isolation Valve Actuator
Lower DW Level Transmitter (2 divisional channels)	LT[2] (Lower DW)	Yes	Yes	Yes	Yes	No	–	–
Suppression Pool Water Level Narrow Range Transmitter (4 divisional channels)	LT[2] (Suppression Pool)	Yes	Yes	Yes	Yes	No	–	–
Suppression Pool Water Level Wide Range Transmitter (4 channels)	LT[2] (Suppression Pool)	No	No	No	No	No	–	–
Suppression Pool Temperature Transmitter (4 divisional channels multiple sensors)	TE[2] (Suppression Pool)	Yes	Yes	Yes	Yes	No	–	–

[1] DPS input; See Section 2.2.14.

[2] Shown as representative in Figure 2.15.7-1.

Table 2.15.7-2

ITAAC For The Containment Monitoring System

Design Commitment	Inspections, Tests, Analyses	Acceptance Criteria
1. The functional arrangement for the CMS is as described in the Design Description in this Subsection 2.15.7, Table 2.15.7-1 and Figure 2.15.7-1.	Inspections of the as-built system will be performed.	The as-built CMS conforms with the functional arrangement described in the Design Description of this Subsection 2.15.7, Table 2.15.7-1 and Figure 2.15.7-1.
2. Each of the safety-related components identified in Table 2.15.7-1 is powered from its respective safety-related division.	Testing will be performed on the CMS by providing a test signal in only one safety-related division at a time.	A test signal exists in the safety-related division (or at the equipment identified in Table 2.15.7-1 powered from the safety-related division) under test in the CMS.
3. Each CMS measured parameter in Table 2.15.7-1 will indicate the measured parameter and initiate separate alarms in the control room when values exceed applicable setpoints.	Using simulated signal inputs, CMS testing will be performed.	Each simulated signal representing a measured parameter in Table 2.15.7-1 indicates the measured parameter and initiates separate alarms in the control room when levels exceed applicable setpoints.
4. The Hydrogen/Oxygen (H_2/O_2) monitoring subsystem of CMS is active during normal operation. Additional sampling capacity is automatically initiated by a LOCA signal for post-accident monitoring of oxygen and hydrogen content in the containment.	Using simulated signals, CMS testing will be performed to verify that the system can be operated and that operation will initiate following a simulated LOCA signal.	The H2/O2 monitor can be operated and that it will be in operation within 90 minutes, including warm-up time, after occurrence of a LOCA initiation signal, which requires the monitor to be functional.

Table 2.15.7-2

ITAAC For The Containment Monitoring System

Design Commitment	Inspections, Tests, Analyses	Acceptance Criteria
5. In each CMS Suppression Pool Temperature Monitoring (SPTM) division, signals from the CMS SPTM temperature and the CMS suppression pool water narrow range transmitters are provided for the divisional RPS logic processors to calculate the suppression pool average temperature.	Tests will be conducted in each division of the SPTM using simulated temperature sensor signals.	For each SPTM division, output signals from the CMS SPTM temperature and the CMS suppression pool water narrow range transmitters are received to generate a suppression pool average temperature by the RPS logic processors.
6. The equipment identified in Table 2.15.7-1 as Seismic Category I can withstand Seismic Category I loads without loss of safety function.	i. Inspection will be performed to verify that the Seismic Category I equipment identified in Table 2.15.7-1 are located in a Seismic Category I structure. ii. Type tests, analyses, or a combination of type tests and analyses, of equipment identified in Table 2.15.7-1 as Seismic Category I, will be performed using analytical assumptions, or will be performed under conditions which bound the Seismic Category I equipment design requirements.	i. The equipment identified as Seismic Category I in Table 2.15.7-1 is located in a Seismic Category I structure. ii. The equipment identified in Table 2.15.7-1 as Seismic Category I can withstand Seismic Category I loads without loss of safety function.

Table 2.15.7-2

ITAAC For The Containment Monitoring System

Design Commitment	Inspections, Tests, Analyses	Acceptance Criteria
	iii. Inspections and analyses will be performed to verify that the as-built equipment identified in Table 2.15.7-1, including anchorage, is bounded by the testing or analyzed conditions.	iii. The as-built equipment identified in Table 2.15.7-1 including anchorage, can withstand Seismic Category I loads without loss of safety function.
7. (Deleted)		
8. (Deleted)		
9. (Deleted)		

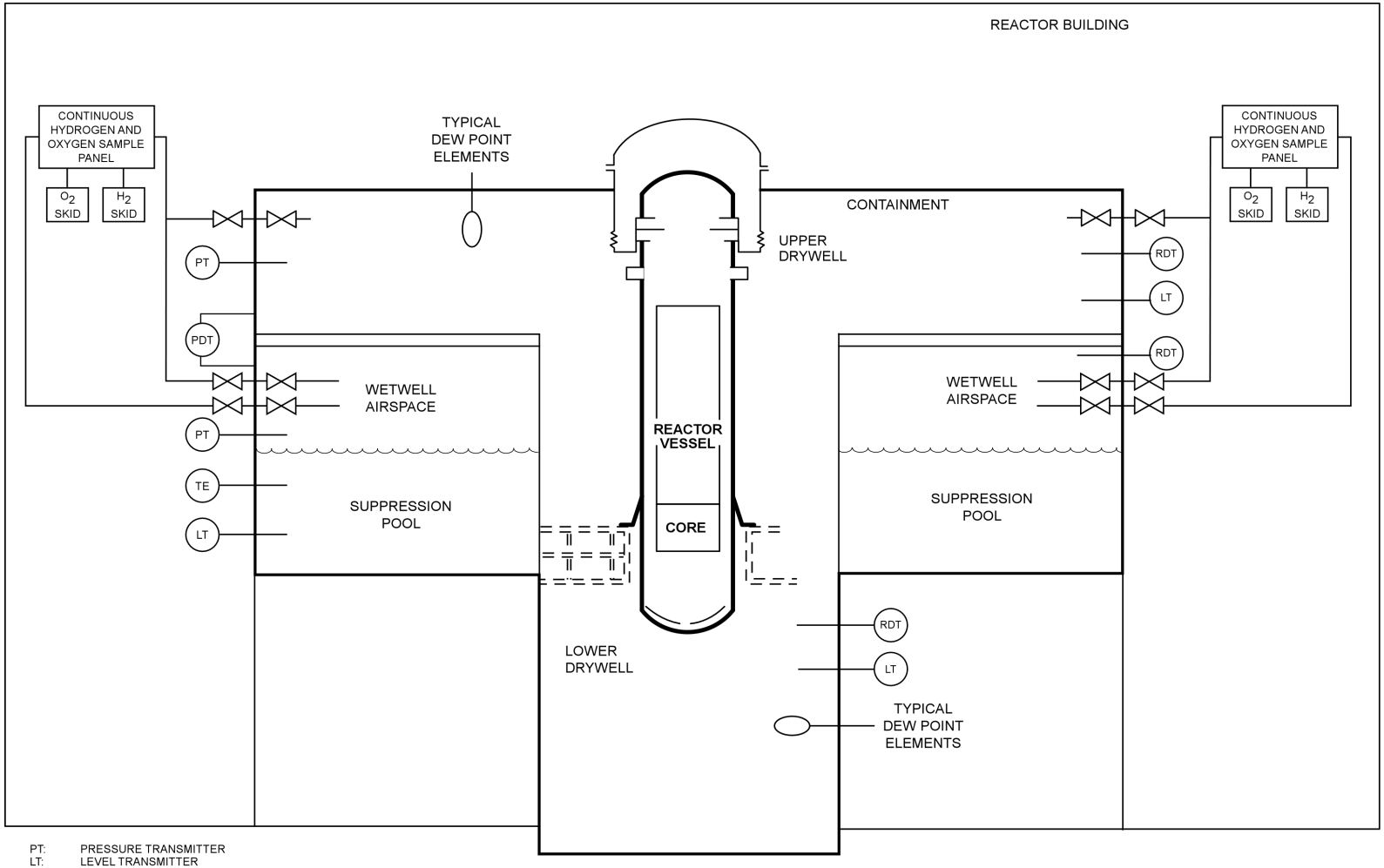

PT: PRESSURE TRANSMITTER
LT: LEVEL TRANSMITTER
PDT: PRESSURE DIFFERENTIAL TRANSMITTER
RDT: RADIATION DETECTION TRANSMITTER
TE: TEMPERATURE ELEMENT

NOTE:
ONLY ONE APPLICABLE SENSOR IS SHOWN
IN THIS SKETCH TO SHOW THEIR TYPICAL LOCATION.

Figure 2.15.7-1. Containment Monitoring System Functional Arrangement

2.15.8 Passive Autocatalytic Recombiner

Design Description

The Passive Autocatalytic Recombiner (PAR) consists of independently mounted, self-contained units which are each capable of recombining a stoichiometric mix of hydrogen and oxygen into water vapor. The PAR System consists of sufficient capacity PAR units to effect a minimum safety factor of two with respect to any efficiency loss primarily due to introduced catalytic poisons.

(1) Passive Autocatalytic Recombiners (PARs) are mounted within the Wetwell airspace and Drywell compartments.

(2) PARs are of a quantity and size in each compartment (Wetwell and Drywell) to ensure a minimum safety factor.

Inspections, Tests, Analyses, and Acceptance Criteria

Table 2.15.8-1 provides a definition of the inspections, test and analyses, together with associated acceptance criteria for the Passive Autocatalytic Recombiner System.

Table 2.15.8-1

ITAAC For The Passive Autocatalytic Recombiner

Design Commitment	Inspections, Tests, Analyses	Acceptance Criteria
1. Passive Autocatalytic Recombiners (PARs) are mounted within the Wetwell airspace and the Drywell compartments.	Inspection will be performed of the as-built installation of PARs in the Wetwell airspace and the Drywell compartments.	The PARs are installed in the Wetwell airspace and the Drywell.
2. PARs are of a quantity and size in each compartment (Wetwell and Drywell) to ensure a minimum safety factor.	An analysis will be performed to verify the quantity and size of the PARs configuration in each compartment (Wetwell and Drywell) and that the design conforms to a minimum safety factor of two with respect to the hydrogen generation rate at 72 hours.	The quantity and size of the installed PARs in each containment compartment (Wetwell and Drywell) conforms to a safety factor of at least two with respect to the hydrogen generation rate greater than 72 hours.

2.16 STRUCTURES AND SERVICING SYSTEMS/EQUIPMENT

2.16.1 Cranes, Hoists and Elevators

Design Description

Cranes and hoists are used for maintenance and refueling tasks. The reactor building (RB) crane, fuel building (FB) crane and associated lifting devices, such as hoists, and elevators in various areas of the plant are nonsafety-related.

(1) The RB crane has a lifting capacity greater than its heaviest expected load.

(2) The FB crane has a lifting capacity greater than its heaviest expected load.

(3) The RB crane is interlocked to prevent movement of heavy loads over new or spent fuel in the RB.

(4) The FB crane is interlocked to prevent movement of heavy loads over spent fuel in the FB.

(5) The RB crane is classified as Seismic Category I to maintain crane structural integrity.

(6) The FB crane is classified as Seismic Category I to maintain crane structural integrity.

(7) The RB crane passes over the centers of gravity of heavy loads included in the certified design that are to be lifted.

(8) The FB crane passes over the centers of gravity of heavy loads included in the certified design that are to be lifted.

(9) Heavy load handling equipment other than the RB crane, FB crane, fuel handling machine and refueling machine are designed or interlocked such that movement of heavy loads is restricted to areas away from stored fuel.

(10) The RB crane is designed such that a single failure will not result in the loss of the capability of the crane to safely retain the load.

(11) The FB crane is designed such that a single failure will not result in the loss of the capability of the crane to safely retain the load.

(12) The GDCS system is not susceptible to a load drop that could result in the GDCS not meeting the Technical Specifications for Modes 5 and 6.

Inspections, Tests, Analyses, and Acceptance Criteria

Table 2.16.1-1 provides a definition of the inspections, test and analyses, together with associated acceptance criteria for the Cranes, Hoists and Elevators.

Table 2.16.1-1

ITAAC For Cranes, Hoists and Elevators

Design Commitment	Inspections, Tests, Analyses	Acceptance Criteria
1. The RB crane has a lifting capacity greater than its heaviest expected load.	A load test at 125% of the rated capacity will be performed.	The RB crane is successfully load tested at 125% of its rated capacity.
2. The FB crane has a lifting capacity greater than its heaviest expected load.	A load test at 125% of the rated capacity will be performed.	The FB crane is successfully load tested at 125% of its rated capacity.
3. The RB crane is interlocked to prevent movement of heavy loads over new or spent fuel in the RB.	Tests will be conducted of the as-built RB crane movement using a heavy load.	The RB crane interlock prevents the carrying of a load greater than one fuel assembly and its associated handling device over new or spent fuel in the RB.
4. The FB crane is interlocked to prevent movement of heavy loads over spent fuel in the FB.	Tests will be conducted of the as-built FB crane movement using a heavy load.	The FB crane interlock prevents the carrying of a load greater than one fuel assembly and its associated handling device over spent fuel storage in the FB.
5. The RB crane is classified as Seismic Category I to maintain crane structural integrity.	Inspection and analyses of the as-built RB crane will be performed to verify that the design meets Seismic Category I requirements.	The RB crane conforms to Seismic Category I requirements.
6. The FB crane is classified as Seismic Category I to maintain crane structural integrity.	Inspection and analyses of the as-built FB crane will be performed to verify that the design meets Seismic Category I requirements.	The FB crane conforms to Seismic Category I requirements.
7. The RB crane passes over the centers of gravity of heavy loads included in the certified design that are to be lifted.	Tests will be conducted of the as-built RB crane.	The RB crane passes over the expected locations of the centers of gravity of heavy loads included in the certified design that are to be lifted.

Table 2.16.1-1

ITAAC For Cranes, Hoists and Elevators

Design Commitment	Inspections, Tests, Analyses	Acceptance Criteria
8. The FB crane passes over the centers of gravity of heavy loads included in the certified design that are to be lifted.	Tests will be conducted of the as-built FB crane.	The FB crane passes over the expected locations of the centers of gravity of heavy loads included in the certified design that are to be lifted.
9. Heavy load handling equipment other than the RB crane, FB crane, fuel handling machine and refueling machine are designed or interlocked such that movement of heavy loads is restricted to areas away from stored fuel.	Inspections of as-built heavy load handling equipment will be performed.	Heavy load handling equipment is designed or interlocked such that movement of heavy loads is restricted to areas away from stored fuel.
10. The RB crane is designed such that a single failure will not result in the loss of the capability of the crane to safely retain the load.	The following inspections and tests will be conducted: i. Nondestructive Examination on the welded structural connections of the RB crane will be performed in accordance with ASME NOG-1, 2004, Paragraph 4251.4. ii. The RB crane will be static load-tested to 125% of the manufacturer's rated load.	The following tests have been successfully completed for the as-built RB crane so that a single failure will not result in the loss of the capability of the crane to safely retain the load: i. Nondestructive Examination on the welded structural connections of the RB crane performed in accordance with ASME NOG-1, 2004, Paragraph 4251.4 ii. The RB crane has passed static load-testing to 125% of the manufacturer's rated load.

Table 2.16.1-1

ITAAC For Cranes, Hoists and Elevators

Design Commitment	Inspections, Tests, Analyses	Acceptance Criteria
	iii. A Full-Load Test on the RB crane will be performed in accordance with ASME NOG-1, 2004, Paragraph 7422.	iii. A Full-Load Test on the RB crane in accordance with ASME NOG-1, 2004, Paragraph 7422.
	iv. A No-Load Test on the RB crane will be performed in accordance with ASME NOG-1, 2004, Paragraphs 7421 and 7421.1.	iv. A No-Load Test on the RB crane performed in accordance with ASME NOG-1, 2004, Paragraphs 7421 and 7421.1.
	v. Inspection of the rope drum, sheeve blocks, and hook component dimensions and material composition.	v. Inspection records show the rope drum, sheave blocks, and hook component dimensions and material compositions match design specifications.
	vi. Inspection of the wire rope (s) for proper reeving.	vi. Inspection records show the wire rope (s) are correctly reeved.
11. The FB crane is designed such that a single failure will not result in the loss of the capability of the crane to safely retain the load.	The following inspections and tests will be conducted:	The following tests have been successfully completed for the as-built FB crane so that a single failure will not result in the loss of the capability of the crane to safely retain the load:
	i. Nondestructive Examination on the welded structural connections of the FB crane will be performed in accordance with ASME NOG-1, 2004, Paragraph 4251.4.	i. Nondestructive Examination on the welded structural connections of the FB crane performed in accordance with ASME NOG-1, 2004, Paragraph 4251.4
	ii. The FB crane will be static load-tested to 125% of the manufacturer's rated load.	ii. The FB crane has passed static load-testing to 125% of the manufacturer's rated load.

Table 2.16.1-1

ITAAC For Cranes, Hoists and Elevators

Design Commitment	Inspections, Tests, Analyses	Acceptance Criteria
	iii. A Full-Load Test on the FB crane will be performed in accordance with ASME NOG-1, 2004, Paragraph 7422.	iii. A Full-Load Test on the FB crane performed in accordance with ASME NOG-1, 2004, Paragraph 7422.
	iv. A No-Load Test on the FB crane will be performed in accordance with ASME NOG-1, 2004, Paragraphs 7421 and 7421.1.	iv. A No-Load Test on the FB crane performed in accordance with ASME NOG-1, 2004, Paragraphs 7421 and 7421.1.
	v. Inspection of the rope drum, sheeve blocks, and hook component dimensions and material composition.	v. Inspection records show the rope drum, sheave blocks, and hook component dimensions and material compositions match design specifications.
	vi. Inspection of the wire rope (s) for proper reeving.	vi. Inspection records show the wire rope (s) are correctly reeved.
12. The GDCS system is not susceptible to a load drop that could result in the GDCS not meeting the Technical Specifications for Modes 5 and 6.	Inspection and analysis of the GDCS piping will be performed.	The GDCS components are not susceptible to a load drop that could result in the GDCS not meeting the Technical Specification for Modes 5 and 6.

2.16.2 Heating, Ventilating and Air Conditioning

2.16.2.1 Reactor Building HVAC

Design Description

The Reactor Building HVAC System (RBVS) serves the Reactor Building. The RBVS consists of three subsystems. The Reactor Building Clean Area HVAC Subsystem (CLAVS) serves the clean (non-radiologically controlled) areas of the Reactor Building and is shown in Figure 2.16.2-1. The Reactor Building Contaminated Area HVAC Subsystem (CONAVS) serves the potentially contaminated areas of the Reactor Building and is shown in Figure 2.16.2-2. The Reactor Building Refueling and Pool Area HVAC Subsystem (REPAVS) serves the refueling area of the Reactor Building and is shown in Figure 2.16.2-3.

The RBVS automatically isolates the Reactor Building boundary (CONAVS and REPAVS subsystems) during accidents. The isolation dampers and ducting penetrating the Reactor Building boundary, and associated controls that provide the isolation signal are safety-related. Safety-related components for the RBVS are listed in Table 2.16.2-1.

Mechanical cooling of the Reactor Building rooms is not provided as a safety-related function while the boundary is isolated. Passive means are provided by the ESBWR design to limit the temperature rise in the Reactor Building rooms to acceptable levels for the first 72 hours following a design basis accident.

RBVS software that controls the safety-related RBVS components is developed in accordance with the software development program described in Section 3.2.

RBVS alarms, displays, controls, and status indications in the MCR are addressed by Section 3.3.

The remaining portion of the RBVS is nonsafety-related.

(1) The functional arrangement of the RBVS is as described in the Design Description of this Subsection 2.16.2.1 and as shown in Figures 2.16.2-1, 2.16.2-2 and 2.16.2-3.

(2) The RBVS isolation dampers automatically close upon receipt of a high radiation signal or (CONAVS and REPAVS) or loss of AC power (CONAVS, REPAVS and CLAVS).

(3) The equipment identified in Table 2.16.2-1 as Seismic Category I can withstand Seismic Category I loads without loss of safety function.

(4) The RBVS maintains the hydrogen concentration levels in the battery rooms below 2% by volume.

(5) CONAVS maintains served areas of the reactor building at a slightly negative pressure relative to surrounding clean areas to minimize the exfiltration of potentially contaminated air.

(6) REPAVS maintains served areas of the reactor building at a slightly negative pressure relative to surrounding clean areas to minimize the exfiltration of potentially contaminated air.

(7) The RBVS provides post 72-hour cooling for DCIS, CRD and RWCU pump rooms, electrical cabinet cooling and CRD/RWCU motor cooling.

(8) (Deleted)

(9) Independence is provided between safety-related divisions, and between safety-related divisions and nonsafety-related equipment.

(10) (Deleted)

(11) The Reactor Building HVAC Online Purge Exhaust Filters are tested to meet RG 1.140 and ASME AG-1 requirements for HEPA and carbon filter efficiency.

(12) a. The Reactor Building HVAC Accident Exhaust Filters maintains the CONAVS served areas of the reactor building at a minimum negative pressure of 62 Pa (-1/4 inch W.G.) relative to surrounding clean areas when operating.

b. The Reactor Building HVAC Accident Exhaust Filters meet RG 1.140 and ASME AG-1 requirements for HEPA and carbon filter efficiency.

(13) The Reactor Building concrete acts as a heat sink that passively maintains the temperature of the Reactor Building rooms within an acceptable range for the first 72 hours following a design basis accident.

Inspections, Tests, Analyses, and Acceptance Criteria

Table 2.16.2-2 provides the design commitments, inspections, tests, analyses and acceptance criteria for the RBVS system.

2.16.2.2 Control Building HVAC System

Design Description

The Control Building HVAC consists of two independent subsystems. The Control Room Habitability Area HVAC Subsystem (CRHAVS) serves the MCR and associated areas bounded by the Control Room Habitability Area (CRHA) envelope. The Control Building General Area HVAC Subsystem (CBGAVS) serves the areas inside the Control Building but outside the CRHA. Table 2.16.2-3 lists the major Control Building HVAC system safety-related components.

Both of these subsystems are nonsafety-related except for that portion of the CRHAVS that forms the CRHA boundary envelope, and the CRHAVS Emergency Filter Units (EFU) and associated components, which are safety-related. This safety-related CRHA boundary envelope consists of the CRHA structure, doors, penetrations, redundant boundary isolation dampers, valves, and that portion of transition ductwork, piping, or tubing that is located between the CRHA boundary structure and the redundant CRHA isolation dampers or valves. The CRHA isolation dampers are the major components discussed in this Subsection. Additional systems, structures, and components (such as EFUs) that are necessary for habitability are discussed in other subsections.

The mechanical cooling of the Control Building General Areas and the CRHA is not provided as a safety-related function during a CRHA boundary isolation. Passive means of limiting CRHA and general area temperature rise to acceptable levels have been provided by the ESBWR design for the first 72 hours following a design basis accident.

The CRHAVS serves the MCR and associated support areas during normal plant operations, plant start-up and plant shutdown and is shown in Figure 2.16.2-4. The CBGAVS serves the areas outside the CRHA and is shown in Figures 2.16.2-5a and 2.16.2-5b.

CRHAVS software that controls the safety-related CRHAVS components is developed in accordance with the software development program described in Section 3.2.

(1) The functional arrangement of the CRHAVS is as described in the Design Description of this Subsection 2.16.2.2 and is as shown in Figure 2.16.2-4.

(2) The CRHA isolation dampers automatically close upon receipt of any of the following signals:

- high radiation in the CRHAVS intake;
- high radiation downstream of an Emergency Filter Unit (EFU) during emergency operation;
- low airflow through an EFU during emergency operation;
- loss of AC power.

(3) The equipment identified in Table 2.16.2-3 as Seismic Category I can withstand Seismic Category I loads without loss of safety function.

(4) The CRHAVS heat sink passively maintains the temperature of the CRHA within an acceptable range for the first 72 hours following a design basis accident.

(5) Independence is provided between safety-related divisions, and between safety-related divisions and nonsafety-related equipment.

(6) CRHA isolation damper and EFU operational status (Open/Closed) indication is provided in the MCR.

(7) The free air volume of the control room envelope is greater than or equal to the volume assumed in safety analyses.

(8) Normal operation intake flow rate is greater than or equal to the flow rate assumed in the safety analyses.

(9) (Deleted)

(10) CRHAVS Air Handling Units and Auxiliary Cooling Units support post-72 hour control room habitability cooling and cooling for post-accident monitoring heat loads.

(11) The CRHA is provided with differential pressure indication for monitoring under normal and emergency operation.

Inspections, Tests, Analyses, and Acceptance Criteria

Table 2.16.2-4 provides definitions of the inspections, test and analyses, together with associated acceptance criteria for the Control Building HVAC.

2.16.2.3 Emergency Filter Units

Design Descriptions

The Emergency Filter Units (EFU) supply pressurized breathing air to the Control Room Habitability Area (CRHA) during isolation of the CRHA boundary envelope. The EFUs are safety-related and maintain habitable conditions in the CRHA to ensure the safety of the control room operators. An EFU is automatically initiated upon CRHA isolation to provide breathing air and pressurization of the CRHA to minimize infiltration. There are two independent, redundant EFU trains capable of supplying sufficient air and CRHA pressurization. The EFUs are part of the CRHAVS, and a simplified system diagram is provided in Figure 2.16.2-4. Design information on safety-related equipment is provided in Table 2.16.2-5.

EFU software that controls the safety-related EFU components is developed in accordance with the software development program described in Section 3.2.

EFU alarms, displays, controls, and status indications in the MCR are addressed by Section 3.3.

(1) The functional configuration of the EFU is as described in the Design Description of this Subsection 2.16.2.3 and as shown in Figure 2.16.2-4.

(2) The selected redundant EFU dampers open upon receipt of a control room habitability envelope isolation signal.

(3) The equipment identified in Table 2.16.2-5 as Seismic Category I can withstand Seismic Category I loads without loss of safety function.

(4) Independence for the EFU trains is provided between safety-related divisions, and between safety-related divisions and nonsafety-related equipment.

(5) a. EFUs maintain the CRHA at the minimum positive pressure with respect to the surrounding areas at the required air addition flow rate.

b. The in-leakage does not exceed the unfiltered in-leakage assumed by control room operator dose analysis.

(6) The powered EFU dampers can be remotely operated from the MCR.

(7) EFUs meet the in-place leakage testing requirements of ASME AG-1 and RG 1.52.

(8) (Deleted)

(9) (Deleted)

(10) EFUs are tested to meet the laboratory test requirements described in ASME AG-1 and RG 1.52 for carbon adsorber efficiency.

(11) The standby EFU starts on a low flow signal from the operating EFU.

(12) EFUs maintain habitable conditions in the CRHA.

(13) (Deleted)

Inspections, Tests, Analyses, and Acceptance Criteria

Table 2.16.2-6 provides the design commitments, inspections, tests, analyses and acceptance criteria for the EFUs.

2.16.2.4 Turbine Building HVAC System

Design Description

The Turbine Building Ventilation System (TBVS) is nonsafety-related. The TBVS includes the Turbine Building supply air fans and associated Air Handling Units (AHUs), and the Turbine Building exhaust fans and associated filter trains.

The Turbine Building Ventilation System is designed to minimize exfiltration of air to adjacent areas by maintaining a slightly negative pressure in the Turbine Building relative to adjacent areas.

(1) The functional arrangement of the Turbine Building Ventilation System (TBVS) is as described in the Design Description of this Subsection 2.16.2.4 and is as shown in Figure 2.16.2-6.

(2) The TBVS provides post 72-hour cooling for DCIS in the Turbine Building and room cooling for the Nuclear Island Chilled Water System and RCCWs pumps.

Inspections, Tests, Analyses, and Acceptance Criteria

Table 2.16.2-7 provides the design commitments, inspections, tests, analyses and acceptance criteria for the Turbine Building HVAC System.

2.16.2.5 Fuel Building HVAC System

Design Description

The Fuel Building HVAC system (FBVS) does not perform any safety-related functions, except for automatic isolation of the Fuel Building ventilation systems to mitigate the consequences of fuel handling accidents with significant radiological releases. The Fuel Building HVAC subsystems include the Fuel Building General Area HVAC Subsystem (FBGAVS) shown in Figure 2.16.2-7 and the Fuel Building Fuel Pool HVAC Subsystem (FBFPVS) shown in Figure 2.16.2-8.

FBVS alarms, displays, controls, and status indications in the MCR are addressed by Section 3.3.

(1) The functional arrangement of the FBVS is as described in the Design Description of this Subsection 2.16.2.5 and as shown in Figures 2.16.2-7 and 2.16.2-8.

(2) The Fuel Building HVAC isolation dampers automatically close upon receipt of a high radiation signal.

(3) The equipment identified in Table 2.16.2-8 as Seismic Category I can withstand Seismic Category I loads without loss of safety function.

(4) The FBVS maintains the fuel building at a slightly negative pressure relative to surrounding areas.

(5) The FBVS provides post 72-hour cooling for FAPCS pump motors and N-DCIS.

(6) (Deleted)

Inspections, Tests, Analyses, and Acceptance Criteria

Table 2.16.2-9 provides the design commitments, inspections, tests, analyses and acceptance criteria for the Fuel Building HVAC.

2.16.2.6 Radwaste Building HVAC System

No ITAAC are required for this system.

2.16.2.7 Electrical Building HVAC System

Design Description

The Electrical Building Ventilation System (EBVS) is nonsafety-related and includes three subsystems. The Electric and Electronic Rooms HVAC Subsystem (EERVS), the Technical Support Center HVAC Subsystem (TSCVS), and the Diesel Generators HVAC Subsystem (DGVS).

(1) The functional arrangement of the Electrical Building Ventilation System (EBVS) is as described in the Design Description of this Subsection 2.16.2.7 and is as shown in Figure 2.16.2-9.

(2) The EBVS provides post 72-hour cooling for Diesel Generators and safety-related electrical distribution and support for electrical power to FAPCS.

(3) The TSCVS air filtration units (AFU) include HEPA filters to provide a habitable work environment for personnel when nonsafety-related power is available.

(4) The TSCVS AFU include charcoal adsorbers to provide a habitable work environment for personnel when nonsafety-related power is available.

(5) The TSCVS AFU maintain the TSC at a slight positive pressure with respect to the surrounding adjacent areas.

Inspections, Tests, Analyses, and Acceptance Criteria

Table 2.16.2-10 provides the design commitments, inspections, tests, analyses and acceptance criteria for the Electrical Building HVAC System.

2.16.2.8 Other Building HVAC Systems

No ITAAC are required for this system.

Table 2.16.2-1

Reactor Building HVAC System Safety-Related Equipment

Equipment	Seismic Category	ASME Code Classification	Fail Safe Position
CONAVS building supply air isolation dampers	I	AG-1	Closed
CONAVS building exhaust air isolation dampers	I	AG-1	Closed
CLAVS building supply air isolation dampers	I	AG-1	Closed
CLAVS building exhaust air isolation dampers	I	AG-1	Closed
REPAVS building supply air isolation dampers	I	AG-1	Closed
REPAVS building exhaust air isolation dampers	I	AG-1	Closed

Table 2.16.2-2

ITAAC For The Reactor Building HVAC

Design Commitment	Inspections, Tests, Analyses	Acceptance Criteria
1. The functional arrangement of the RBVS is as described in the Design Description of this Subsection 2.16.2.1 and as shown in Figures 2.16.2-1, 2.16.2-2 and 2.16.2-3.	Inspections of the RBVS configuration will be conducted.	The as-built RBVS conforms to the description in Subsection 2.16.2.1 and is as shown in Figures 2.16.2-1, 2.16.2-2 and 2.16.2-3.
2. The RBVS isolation dampers automatically close upon receipt of a high radiation signal (CONAVS and REPAVS) or loss of AC power (CONAVS, REPAVS and CLAVS).	Testing of the RBVS isolation dampers will be performed using simulated signals to close the RBVS isolation dampers.	Upon receipt of a simulated high radiation signal or a simulated loss of AC power signal, the as-built RBVS isolation dampers automatically close.
3. The equipment identified in Table 2.16.2-1 as Seismic Category I can withstand Seismic Category I loads without loss of safety function.	i. Inspection will be performed to verify that the Seismic Category I equipment identified in Table 2.16.2-1 are located in a Seismic Category I structure. ii. Type tests, analyses, or a combination of type tests and analyses, of equipment identified in Table 2.16.2-1 as Seismic Category I, will be performed using analytical assumptions, or will be performed under conditions which bound the Seismic Category I equipment design requirements.	i. The equipment identified as Seismic Category I in Table 2.16.2-1 is located in a Seismic Category I structure. ii. The equipment identified in Table 2.16.2-1 as Seismic Category I can withstand Seismic Category I loads without loss of safety function.

Table 2.16.2-2

ITAAC For The Reactor Building HVAC

Design Commitment	Inspections, Tests, Analyses	Acceptance Criteria
	iii. Inspections and analyses will be performed to verify that the as-built equipment identified in Table 2.16.2-1, including anchorage, is bounded by the testing or analyzed conditions.	iii. The as-built equipment identified in Table 2.16.2-1 including anchorage, can withstand Seismic Category I loads without loss of safety function.
4. The RBVS maintains the hydrogen concentration levels in the battery rooms below 2% by volume.	Testing and analysis of the system will be performed to demonstrate the air flow capability of the RBVS is adequate to maintain the hydrogen concentration levels in the battery rooms below 2%.	The air flow capability of the as-built RBVS is adequate to maintain the hydrogen concentration levels in the battery rooms below 2%.
5. CONAVS maintains served areas of the reactor building at a slightly negative pressure relative to surrounding clean areas to minimize the exfiltration of potentially contaminated air.	i. Testing will be performed to confirm that the contaminated areas of the reactor building served by CONAVS maintain a minimum negative pressure of 62 Pa (-1/4 in wg) relative to surrounding clean areas when operating CONAVS supply and exhaust fans in the normal system fan lineup.	i. The time average pressure differential in the as-built CONAVS served areas of the reactor building as measured by each of the pressure differential indicators is minimum negative pressure of 62 Pa (-1/4 in wg).

Table 2.16.2-2

ITAAC For The Reactor Building HVAC

Design Commitment	Inspections, Tests, Analyses	Acceptance Criteria
	ii. Testing will be performed to confirm the ventilation flow rate through the contaminated areas of the reactor building served by CONAVS when operating CONAVS supply and exhaust fans in the normal system fan lineup.	ii. The exhaust flow rate is greater than or equal to the as-built CONAVS supply flow rate.
6. REPAVS maintains served areas of the reactor building at a slightly negative pressure relative to surrounding clean areas to minimize the exfiltration of potentially contaminated air.	i. Testing will be performed to confirm that the refueling area of the reactor building served by REPAVS maintains a minimum negative pressure of 62 Pa (-1/4 in wg) relative to surrounding clean areas when operating REPAVS supply and exhaust fans in the normal system fan lineup.	i. The time average pressure differential in the as-built REPAVS served areas of the reactor building as measured by each of the pressure differential indicators is minimum negative pressure of 62 Pa (-1/4 in wg).
	ii. Testing will be performed to confirm the ventilation flow rate through the refueling area of the reactor building served by REPAVS when operating REPAVS supply and exhaust fans in the normal system fan lineup.	ii. The exhaust flow rate is greater than or equal to the as-built REPAVS supply flow rate.

Table 2.16.2-2

ITAAC For The Reactor Building HVAC

Design Commitment	Inspections, Tests, Analyses	Acceptance Criteria
7. The RBVS provides post 72-hour cooling for DCIS , CRD and RWCU pump rooms, electrical cabinet cooling and CRD / RWCU motor cooling.	Testing of the integrated system will be performed to demonstrate the air flow capability of the RBVS to support post-72 hour cooling for DCIS, CRD and RWCU pump rooms, electrical cabinet cooling and CRD / RWCU motor cooling.	The integrated system test demonstrates the air flow capability to support post-72 hour cooling for DCIS, CRD and RWCU pump rooms, electrical cabinet cooling and CRD / RWCU motor cooling.
8. (Deleted)		
9. Independence is provided between safety-related divisions, and between safety-related divisions and nonsafety-related equipment.	i. Tests will be performed on the RBVS dampers by providing a test signal in only one safety-related division at a time. ii. Inspection of the as-built safety-related divisions in the system will be performed.	i. The test signal exists only in the safety-related division under test in the as-built RBVS damper. ii. Physical separation and electrical isolation exists between as-built RBVS dampers. Physical separation or electrical isolation exists between safety-related divisions and nonsafety-related equipment as defined by RG 1.75.
10. (Deleted)		
11. The Reactor Building HVAC Online Purge Exhaust Filters meet RG 1.140 and ASME AG-1 requirements for HEPA and carbon filter efficiency	Each charcoal adsorber will be tested in accordance with RG 1.140. HEPA filters will be tested in accordance with ASME AG-1, Section FC.	The as-built Reactor Building HVAC Online Purge Exhaust filter efficiency meet the acceptance criteria for laboratory and in place testing in accordance with RG 1.140 and ASME AG-1.

Table 2.16.2-2

ITAAC For The Reactor Building HVAC

Design Commitment	Inspections, Tests, Analyses	Acceptance Criteria
12a. The Reactor Building HVAC Accident Exhaust Filters maintains the CONAVS served areas of the reactor building at a minimum negative pressure of 62 Pa (-1/4 inch W.G.) relative to surrounding clean areas when operating.	Testing will be performed to confirm that the Reactor Building HVAC Accident Exhaust Filters maintain the CONAVS area at a minimum negative pressure of 62 Pa (-1/4 inch W.G.) relative to surrounding clean areas when operating each filter train.	The time average pressure differential in the as-built CONAVS served areas of the reactor building as measured by pressure differential indicators is minimum negative pressure of 62 Pa (-1/4 inch W.G.).
12b. The Reactor Building HVAC Accident Exhaust Filters meet RG 1.140 and ASME AG-1 requirements for HEPA and carbon filter efficiency.	The Reactor Building HVAC Accident Exhaust Filters meet RG 1.140 and ASME AG-1 requirements for HEPA and carbon filter efficiency.	The as-built RB HVAC Accident Exhaust filter efficiencies meet the acceptance criteria for in place testing in accordance with RG 1.140 and ASME AG-1.
13. The Reactor Building concrete acts as a heat sink that passively maintains the temperature of the Reactor Building rooms within an acceptable range for the first 72 hours following a design basis accident.	A Control Building and Reactor Building Environmental Temperature Analysis for ESBWR will be performed using the as-built heat sink dimensions, the as-built heat sink thermal properties, the as-built heat sink exposed surface area, the as-built thermal properties of materials covering parts of the heat sink, and the as-built heat loads.	The bulk average air temperature in the Reactor Building rooms will not exceed the Thermodynamic Environment Conditions Inside Reactor Building for Accident Conditions on a loss of active cooling for the first 72 hours following a design basis accident, given post design basis accident conditions and reconciled to as-built features and heat loads.

Table 2.16.2-3

Control Building HVAC System Safety-Related Equipment

Equipment	Seismic Category	ASME Code Classification	Notes
CRHA supply air isolation dampers	I	AG-1	Fail Closed
CRHA Restroom Exhaust isolation dampers	I	AG-1	Fail Closed
CRHA Smoke Exhaust intake isolation dampers	I	AG-1	Fail Closed
CRHA Smoke Exhaust output isolation dampers	I	AG-1	Fail Closed
CRHA Variable Orifice Relief Device	I	AG-1	Locked in place

Table 2.16.2-4

ITAAC For The Control Building Habitability HVAC Subsystem

Design Commitment	Inspections, Tests, Analyses	Acceptance Criteria
1. The functional arrangement of the CRHAVS is as described in the Design Description of this Subsection 2.16.2.2 and as shown in Figure 2.16.2-4.	Inspections of the CRHAVS configuration will be conducted.	The as-built CRHAVS conforms to the design description in this Subsection 2.16.2.2 and is as shown in Figure 2.16.2-4.
2. The CRHA isolation dampers automatically close upon receipt of any of the following signals: • high radiation in the CRHAVS intake; • high radiation downstream of an Emergency Filter Unit (EFU) during emergency operation; • low airflow through an EFU during emergency operation; • loss of AC power.	Testing of the CRHA isolation dampers will be performed using simulated signals to close the CRHA isolation dampers.	The as-built CRHA isolation dampers automatically close upon receipt of any of the following simulated signals: • high radiation in the CRHAVS intake; • a high radiation downstream of an Emergency Filter Unit (EFU) during emergency operation; • low airflow through an EFU during emergency operation; • a loss of AC power signal
3. The equipment identified in Table 2.16.2-3 as Seismic Category I can withstand Seismic Category I loads without loss of safety function.	i. Inspection will be performed to verify that the Seismic Category I equipment identified in Table 2.16.2-3 are located in a Seismic Category I structure.	i. The equipment identified as Seismic Category I in Table 2.16.2-3 is located in a Seismic Category I structure.

Table 2.16.2-4

ITAAC For The Control Building Habitability HVAC Subsystem

Design Commitment	Inspections, Tests, Analyses	Acceptance Criteria
	ii. Type tests, analyses, or a combination of type tests and analyses, of equipment identified in Table 2.16.2-3 as Seismic Category I, will be performed using analytical assumptions, or will be performed under conditions which bound the Seismic Category I equipment design requirements.	ii. The equipment identified in Table 2.16.2-3 as Seismic Category I can withstand Seismic Category I loads without loss of safety function.
	iii. Inspections and analyses will be performed to verify that the as-built equipment identified in Table 2.16.2-3, including anchorage, is bounded by the testing or analyzed conditions.	iii. The as-built equipment identified in Table 2.16.2-3 including anchorage, can withstand Seismic Category I loads without loss of safety function.
4. The CRHAVS heat sink passively maintains the temperature of the CRHA within an acceptable range for the first 72 hours following a design basis accident.	i. A Control Building and Reactor Building Environmental Temperature Analysis for ESBWR will be performed using the as-built heat sink dimensions, the as-built heat sink thermal properties, the as-built heat sink exposed surface area, the as-built thermal properties of materials covering parts of the heat sink, and the as-built heat loads.	i. The CRHA maximum bulk average air temperature is 33.9º C (93º F) or less on a loss of active cooling for the first 72 hours following a design basis accident, given post design basis accident conditions and as reconciled to as-built features and heat loads.

Table 2.16.2-4

ITAAC For The Control Building Habitability HVAC Subsystem

Design Commitment	Inspections, Tests, Analyses	Acceptance Criteria
	ii. A Control Room Habitability Area Minimum Temperature Analysis will be performed using as-built design inputs established by Table 2.16.2-4 Item 4i, in addition to minimum assumed heat loads, minimum assumed outside air conditions and minimum assumed normal operation concrete heat sink temperatures	ii. The CRHA minimum bulk average air temperature is 12.8º C (55º F) or above on a loss of normal heating for the first 72 hours following a design basis accident, given winter post design basis accident conditions and as reconciled to as-built features and assumed minimum temperatures.
	iii. A Control Building and Reactor Building Environmental Temperature Analysis for ESBWR will be performed using the as-built design inputs established in Table 2.16.2-4 Item 4i and using the 0% Exceedance Value for wet bulb (non-coincident) temperature and corresponding High Humidity Diurnal Swing. A reconciliation analysis will be performed for the as-built features and heat loads, and limiting outdoor conditions.	iii. The CRHA maximum bulk average wet bulb globe temperature index is 32.2º C (90.0º F) or less on a loss of active cooling for the first 72 hours following a design basis accident, given post design basis accident conditions and as reconciled to as-built features and heat loads, and to limiting outdoor conditions.
5. Independence is provided between safety-related divisions, and between safety-related divisions and nonsafety-related equipment.	i. Tests will be performed on CRHA isolation damper and EFU operation by providing a test signal in only one safety-related division at a time.	i. The test signal exists only in the safety-related division under test in the as-built CRHA isolation damper and EFU control.

Table 2.16.2-4

ITAAC For The Control Building Habitability HVAC Subsystem

Design Commitment	Inspections, Tests, Analyses	Acceptance Criteria
	ii. Inspection of the as-built safety-related divisions in the system will be performed.	ii. Physical separation and electrical isolation exists between as-built CRHA isolation dampers and EFU safety-related divisions. Physical separation or electrical isolation exists between safety-related divisions and nonsafety-related equipment as defined in RG 1.75.
6. CRHA isolation damper and EFU operational status (Open/Closed) indication is provided in the MCR.	i. Inspection will be performed to verify CRHA isolation damper and EFU operational status indication is installed in the MCR.	i. The as-built CRHA isolation damper and EFU operational status indication is provided in the MCR.
	ii. Testing will be performed to show that the operational status indication in the MCR accurately depicts the operational status of the CRHA isolation dampers and EFUs.	ii. The operational status indication accurately depicts the operational status of the as-built CRHA isolation dampers and EFUs.
7. The free air volume of the control room envelope is greater than or equal to the volume assumed in safety analyses.	Analyses to be performed based on the as-built control room envelope to determine the free air volume (total volume minus equipment and walls).	The free air volume of the control room envelop is ≥ 2,200 m^3 (78,000 ft^3).
8. Normal operation intake flow rate is greater than or equal to the flow rate assumed in the safety analyses.	Inspections will be performed to verify the normal operation intake flow rate.	The flow rate is ≥ 220 l/s (466 cfm).
9. (Deleted)		

Table 2.16.2-4

ITAAC For The Control Building Habitability HVAC Subsystem

Design Commitment	Inspections, Tests, Analyses	Acceptance Criteria
10. CRHAVS Air Handling Units and Auxiliary Cooling Units support post-72 hour control room habitability cooling and cooling for post-accident monitoring heat loads.	Testing of the integrated system will be performed to demonstrate the air-flow capability of the CRHAVS to support post-72 hour cooling for CRHA and Q-DCIS heat loads.	The integrated system test demonstrates the air-flow capability to support post-72 hour cooling for CRHA and Q-DCIS heat loads.
11. The CRHA is provided with differential pressure indication for monitoring under normal and emergency operation.	Testing will be performed to verify that the CRHA MCR pressure indication operates as designed.	The as-built CRHA pressure indication is provided in the MCR.

Table 2.16.2-5

Emergency Filter Units

Equipment	Seismic Category	ASME Code	Notes
EFU (fan, HEPA, and charcoal filters)	I	AG-1	Minimum flow rate of 220 l/s (466 cfm), or 10.5 l/s (22 cfm) per person for up to 21 persons, independent trains
EFU supply CRHA isolation dampers, tornado protection dampers and missile protected intake louvers with connecting ducting (including supports)	I	AG-1	Redundant dampers in each independent train
EFU discharge CRHA isolation dampers and connecting ducting (including supports)	I	AG-1	Redundant dampers in each independent train

Table 2.16.2-6

ITAAC For The Emergency Filter Units

Design Commitment	Inspections, Tests, Analyses	Acceptance Criteria
1. The functional arrangement of the EFU is as described in the Design Description of this Subsection 2.16.2.3 and as shown in Figure 2.16.2-4.	Inspections of the EFU configuration will be conducted.	The as-built EFU system conforms with the design description in this Subsection 2.16.2.3 and is as shown in Figure 2.16.2-4.
2. The selected redundant EFU dampers open upon receipt of a control room habitability envelope isolation signal.	Testing of the EFU dampers will be performed using simulated control room habitability envelope isolation signal to open the EFU dampers.	Upon receipt of a simulated control room habitability envelope isolation signal, the as-built EFU dampers automatically open.
3. The equipment identified in Table 2.16.2-5 as Seismic Category I can withstand Seismic Category I loads without loss of safety function.	i. Inspection will be performed to verify that the Seismic Category I equipment identified in Table 2.16.2-5 are located in a Seismic Category I structure. ii. Type tests, analyses, or a combination of type tests and analyses, of equipment identified in Table 2.16.2-5 as Seismic Category I, will be performed using analytical assumptions, or will be performed under conditions which bound the Seismic Category I equipment design requirements.	i. The equipment identified as Seismic Category I in Table 2.16.2-5 is located in a Seismic Category I structure. ii. The equipment identified in Table 2.16.2-5 as Seismic Category I can withstand Seismic Category I loads without loss of safety function.

Table 2.16.2-6

ITAAC For The Emergency Filter Units

Design Commitment	Inspections, Tests, Analyses	Acceptance Criteria
	iii. Inspections and analyses will be performed to verify that the as-built equipment identified in Table 2.16.2-5, including anchorage, is bounded by the testing or analyzed conditions.	iii. The as-built equipment identified in Table 2.16.2-5 including anchorage, can withstand Seismic Category I loads without loss of safety function.
4. Independence for the EFU trains is provided between safety-related divisions, and between safety-related divisions and nonsafety-related equipment.	i. Tests will be performed on EFUs by providing a test signal in only one safety-related division at a time. ii. Inspection of the as-built safety-related divisions in the EFU system will be performed.	i. The test signal exists only in the safety-related division under test for the EFU trains. ii. For the as-built EFU trains, physical separation or electrical isolation exists between these safety-related divisions. Physical separation or electrical isolation exists between safety-related divisions and nonsafety-related equipment as defined in RG 1.75.
5a. EFUs maintain the CRHA at the minimum positive pressure with respect to the surrounding areas at the required air addition flow rate.	Testing will be performed to measure the differential pressure between the CRHA and surrounding adjacent areas.	The as-built EFUs maintain the CRHA at a positive pressure of > 31 Pa (0.125 in wg) with respect to the surrounding areas at the required air addition flow rate.
5b. The in-leakage does not exceed the unfiltered in-leakage assumed by control room operator dose analysis.	Tracer gas testing in accordance with ASTM E741 will be performed to measure the unfiltered in-leakage into the CRHA with EFUs operating.	The unfiltered in-leakage measured by tracer gas testing does not exceed the unfiltered in-leakage assumed by control room operator dose analysis.

Table 2.16.2-6

ITAAC For The Emergency Filter Units

Design Commitment	Inspections, Tests, Analyses	Acceptance Criteria
6. The powered EFU dampers can be remotely operated from the MCR.	EFU dampers will be opened and closed using manually initiated signals from the MCR.	The as-built EFU dampers open and close when manually imitated signals are sent from the MCR.
7. EFUs meet the in-place leakage testing requirements of ASME AG-1 and RG 1.52.	EFUs will be in-place leak tested in accordance with ASME AG-1, Section TA, to meet the requirements of RG 1.52.	The as-built EFUs meet the acceptance criteria for in-place testing per RG 1.52, Regulatory Position 6, when tested in accordance with the requirements described in ASME AG-1, Section TA.
8. (Deleted)		
9. (Deleted)		
10. EFUs are tested to meet the laboratory test requirements described in ASME AG-1 and RG 1.52 for carbon adsorber efficiency.	Each charcoal adsorber will be laboratory tested in accordance with the requirements described in ASME AG-1, Section FE.	Charcoal adsorber efficiency meets the acceptance criteria for laboratory testing per RG 1.52, Regulatory Position 7, when tested in accordance with the requirements described in ASME AG-1, Section FE.
11. The standby EFU starts on a low flow signal from the operating EFU.	Testing will be performed to verify that the operating EFU is isolated and the standby EFU is automatically started on a low flow signal from the operating EFU.	A low flow test signal from the operating EFU will start the standby EFU.

Table 2.16.2-6

ITAAC For The Emergency Filter Units

Design Commitment	Inspections, Tests, Analyses	Acceptance Criteria
12. EFUs maintain habitable conditions in the CRHA.	Testing will ensure that the filtered air supply will not be reduced below the required 220 l/s (466 cfm) when the CRHA is isolated and being maintained at a positive pressure of >31 Pa (0.125 in. wg) with respect to the surrounding areas.	The as-built EFUs provide 220 l/s (466 cfm) of filtered air when the CRHA is isolated and being maintained at a positive pressure of >31 Pa (0.125 in. wg) with respect to the surrounding areas.
13. (Deleted)		

Table 2.16.2-7

ITAAC For The Turbine Building Ventilation System

Design Commitment	Inspections, Tests, Analyses	Acceptance Criteria
1. The functional arrangement of the Turbine Building Ventilation System (TBVS) is as described in the Design Description of this Subsection 2.16.2.4 and shown in Figure 2.16.2-6.	Inspections of the TBVS configuration will be conducted.	The as-built TBVS system conforms with the design description in this Subsection 2.16.2.4 and shown in Figure 2.16.2-6.
2. The TBVS provides post 72-hour cooling for DCIS in the Turbine Building and room cooling for the Nuclear Island Chilled Water System and RCCW pumps.	System testing will be performed and cooling air flow to the specified cubicles will be verified.	The cooling air flow capability meets the requirements to support post 72-hour cooling for DCIS in the Turbine Building and room cooling for the Nuclear Island Chilled Water System and RCCW pumps.

Table 2.16.2-8

Fuel Building HVAC System Safety-Related Equipment

Equipment	Seismic Category	ASME Code Classification	Fail Safe Position
FBGAVS building supply air isolation dampers	I	AG-1	Closed
FBGAVS building exhaust air isolation dampers	I	AG-1	Closed
FBFPVS building supply air isolation dampers	I	AG-1	Closed
FBFPVS building exhaust air isolation dampers	I	AG-1	Closed

Table 2.16.2-9

ITAAC For The Fuel Building HVAC

Design Commitment	Inspections, Tests, Analyses	Acceptance Criteria
1. The functional arrangement of the FBVS is as described in the Design Description of this Subsection 2.16.2.5 and as shown in Figures 2.16.2-7 and 2.16.2-8.	Inspections of the FBVS configuration will be conducted.	The as-built FBVS system conforms to the design description in this Subsection 2.16.2.5 and as shown in Figures 2.16.2-7 and 2.16.2-8.
2. The Fuel Building HVAC isolation dampers automatically close upon receipt of a high radiation signal.	Using a simulated high radiation signal, tests will be performed on the (Fuel Building HVAC isolation dampers) isolation logic.	Upon receipt of a simulated high radiation signal, the Fuel Building HVAC isolation dampers automatically close.
3. The equipment identified in Table 2.16.2-8 as Seismic Category I can withstand Seismic Category I loads without loss of safety function.	i. Inspection will be performed to verify that the Seismic Category I equipment identified in Table 2.16.2-8 are located in a Seismic Category I structure. ii. Type tests, analyses, or a combination of type tests and analyses, of equipment identified in Table 2.16.2-8 as Seismic Category I, will be performed using analytical assumptions, or will be performed under conditions which bound the Seismic Category I equipment design requirements.	i. The equipment identified as Seismic Category I in Table 2.16.2-8 is located in a Seismic Category I structure. ii. The equipment identified in Table 2.16.2-8 as Seismic Category I can withstand Seismic Category I loads without loss of safety function.

Table 2.16.2-9

ITAAC For The Fuel Building HVAC

Design Commitment	Inspections, Tests, Analyses	Acceptance Criteria
	iii. Inspections and analyses will be performed to verify that the as-built equipment identified in Table 2.16.2-8, including anchorage, is bounded by the testing or analyzed conditions.	iii. The as-built equipment identified in Table 2.16.2-8 including anchorage, can withstand Seismic Category I loads without loss of safety function.
4. The FBVS maintains the fuel building at a slightly negative pressure relative to surrounding areas.	i. Testing will be performed to confirm that the FBVS maintains a minimum negative pressure of 62 Pa (-1/4 inch W.G.) when operating FBVS supply and exhaust AHUs in the normal system fan lineup. ii. Testing will be performed to confirm the ventilation flow rate through the fuel building area when operating the FBVS supply and exhaust fans in the normal system fan lineup.	i. The average differential pressure in the served areas of the fuel building as measured by the pressure differential indicators is a minimum negative pressure of 62 Pa (-1/4 inch W.G.). ii. The exhaust flow rate is greater than or equal to the FBVS supply flow rate.
5. The FBVS provides post 72-hour cooling for FAPCS pump motors and N-DCIS.	System testing will be performed and cooling air-flow to the specified cubicles will be verified.	The cooling air-flow capability meets the requirements to support post 72-hour cooling for FAPCS pump motors and N-DCIS.
6. (Deleted)		

Table 2.16.2-10

ITAAC For The Electrical Building Ventilation System

Design Commitment	Inspections, Tests, Analyses	Acceptance Criteria
1. The functional arrangement of the Electrical Building Ventilation System (EBVS) is as described in the Design Description of this Subsection 2.16.2.7 and shown in Figure 2.16.2-9.	Inspections of the EBVS configuration will be conducted.	The as-built EBVS system conforms with the description in Subsection 2.16.2.7 and shown in Figure 2.16.2-9.
2. The EBVS provides post 72-hour cooling for Diesel Generators and Safety-Related Electrical Distribution, and support for electrical power to FAPCS.	System testing will be performed and cooling air flow to the specified cubicles will be verified.	The cooling air flow capability meets the requirements to support post 72-hour cooling for Diesel Generators and safety-related Electrical Distribution, and support for electrical power to FAPCS.
3. The TSCVS air filtration units (AFU) include HEPA filters to provide a habitable work environment for personnel when nonsafety-related power is available.	An inspection of the as-built TSCVS HEPA filters procurement documentation will be performed.	The initially installed HEPA filters have been designed, constructed and tested in accordance with Section FC of ASME AG-1.
4. The TSCVS AFU include charcoal adsorbers to provide a habitable work environment for personnel when nonsafety-related power is available.	An inspection of the as-built TSCVS charcoal adsorber procurement documentation will be performed.	The initially installed charcoal adsorbers have been designed, constructed and tested in accordance with Section FE of ASME AG-1.

Table 2.16.2-10

ITAAC For The Electrical Building Ventilation System

Design Commitment	Inspections, Tests, Analyses	Acceptance Criteria
5. The TSCVS AFU maintain the TSC at a slight positive pressure with respect to the surrounding areas.	Testing will be performed to measure the differential pressure between the TSC and surrounding areas.	The as-built TSCVS filtration units maintain the TSC at a positive pressure of > 31Pa (0.125 inch water gauge) with respect to the surrounding areas at the required air addition flow rate.

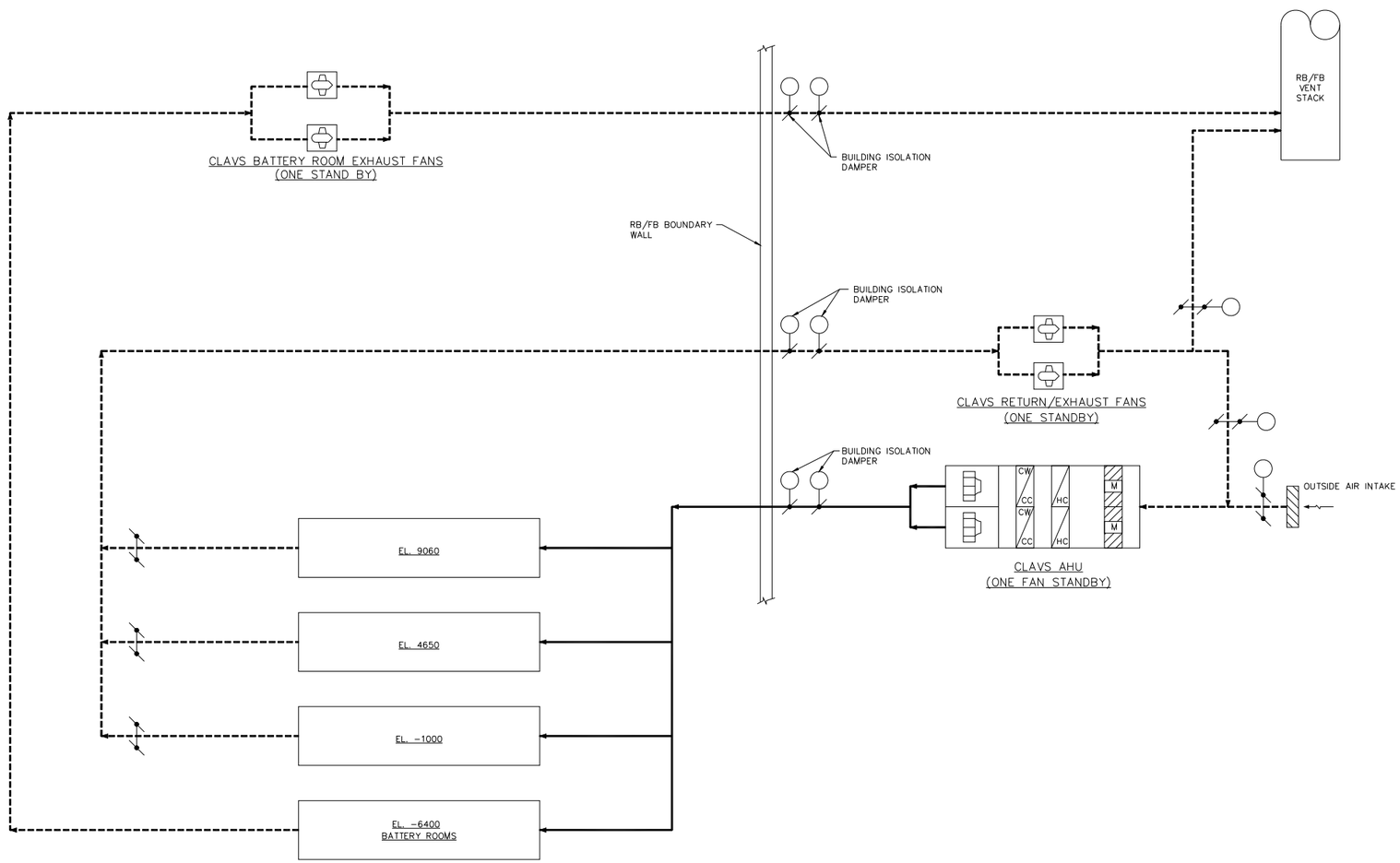

Figure 2.16.2-1. CLAVS Functional Arrangement Diagram (Typical Train A/B)

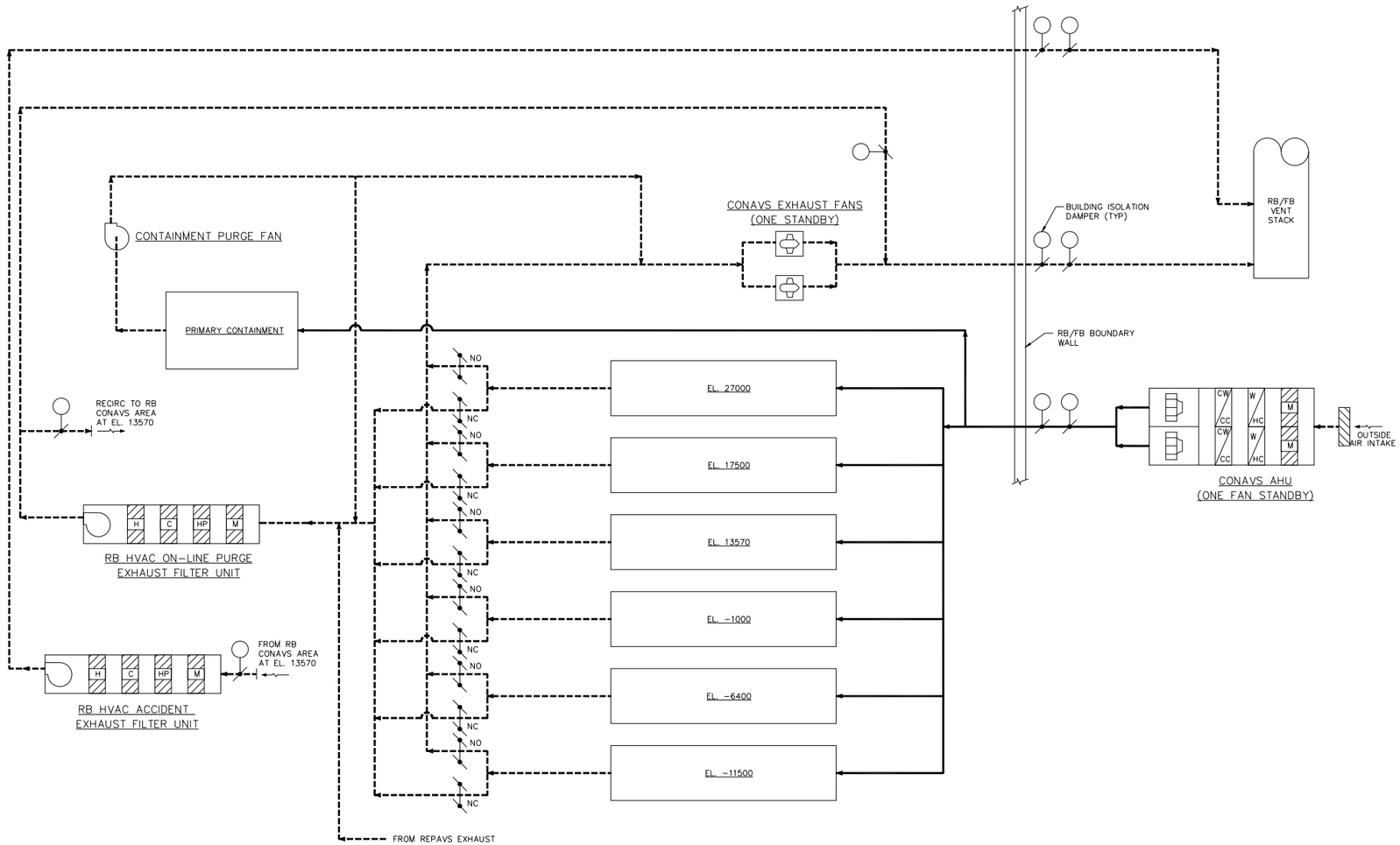

Figure 2.16.2-2. CONAVS Functional Arrangement Diagram (Typical Train A/B)

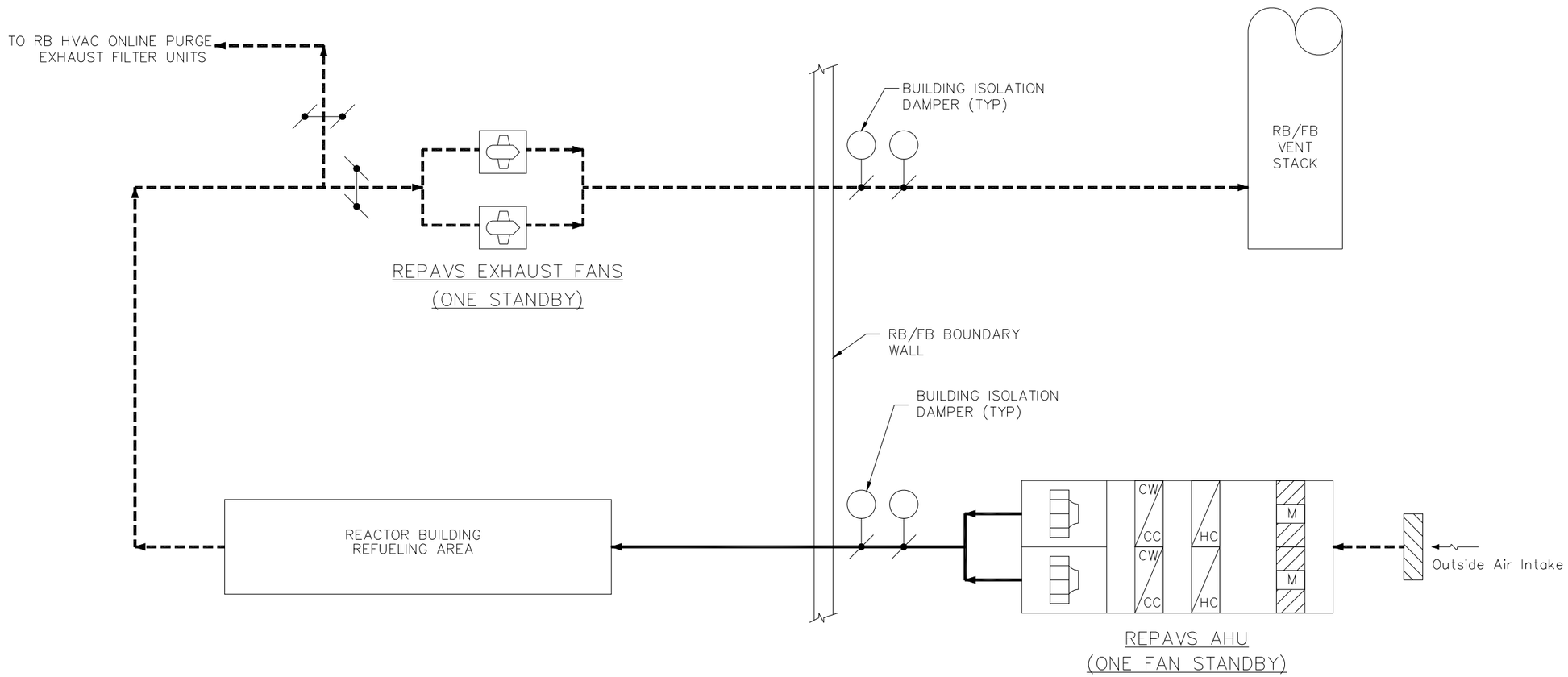

Figure 2.16.2-3. REPAVS Functional Arrangement Diagram

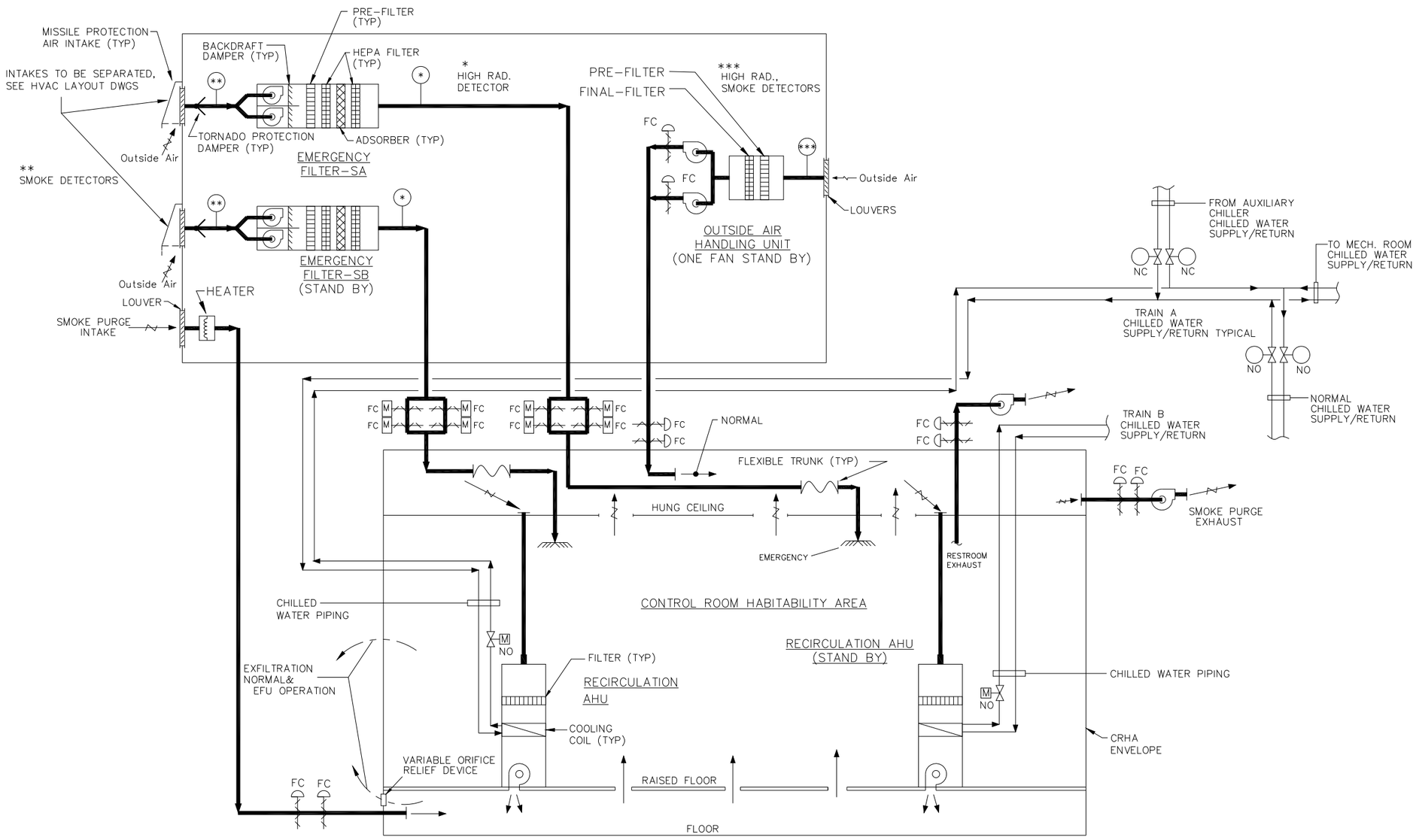

Figure 2.16.2-4. CRHAVS Functional Arrangement Diagram

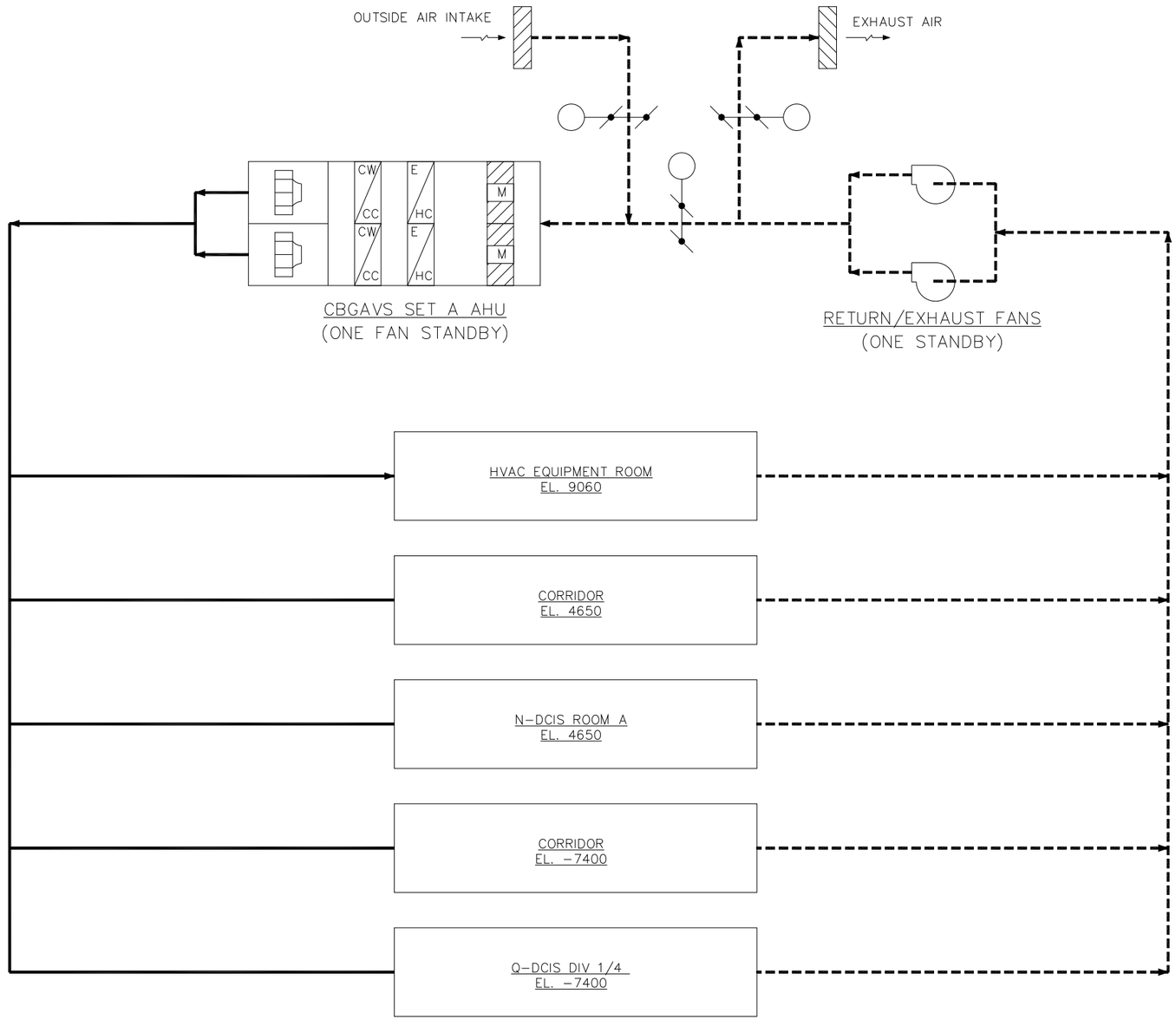

Figure 2.16.2-5a. CBGAVS (Set A) Functional Arrangement Diagram

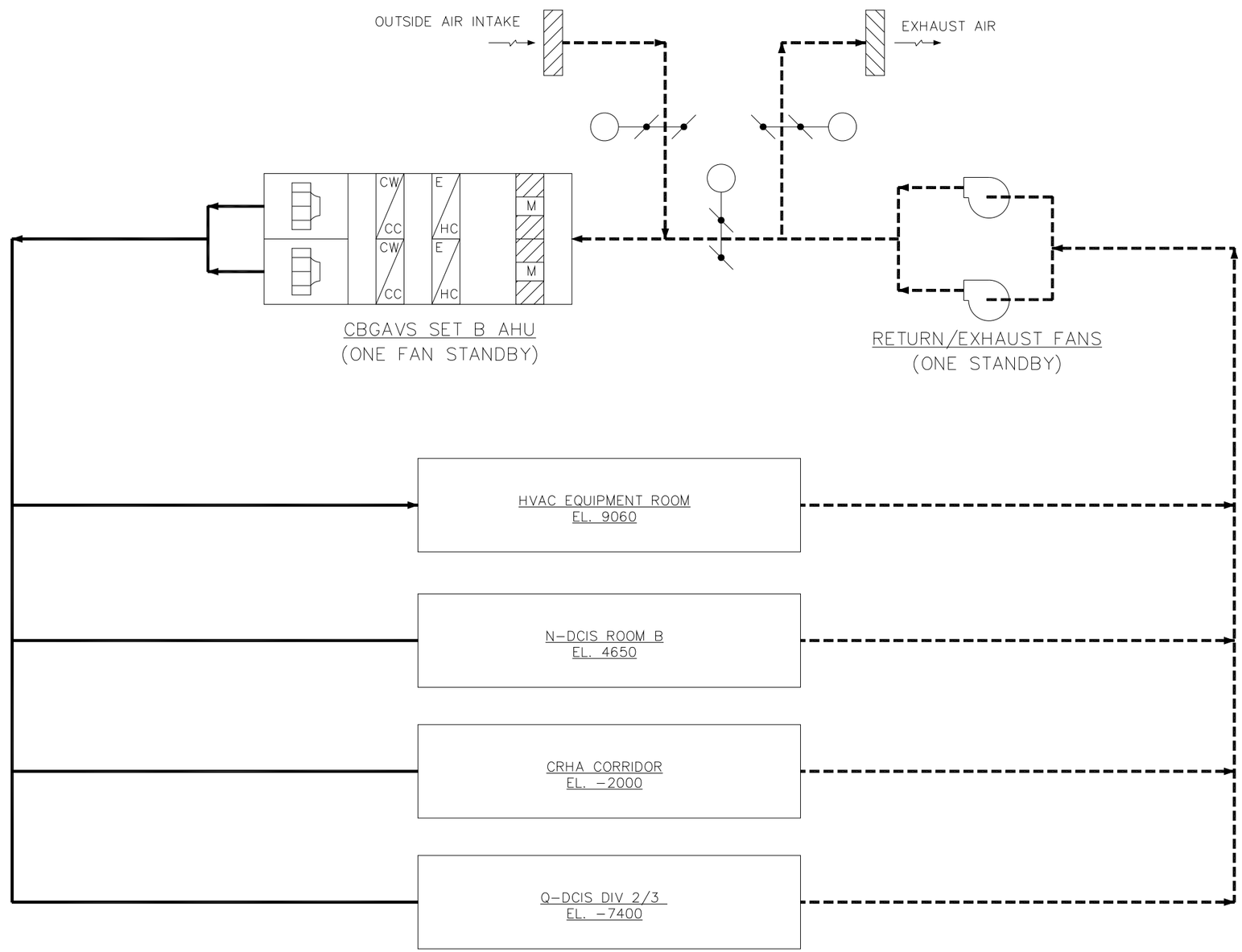

Figure 2.16.2-5b. CBGAVS (Set B) Functional Arrangement Diagram

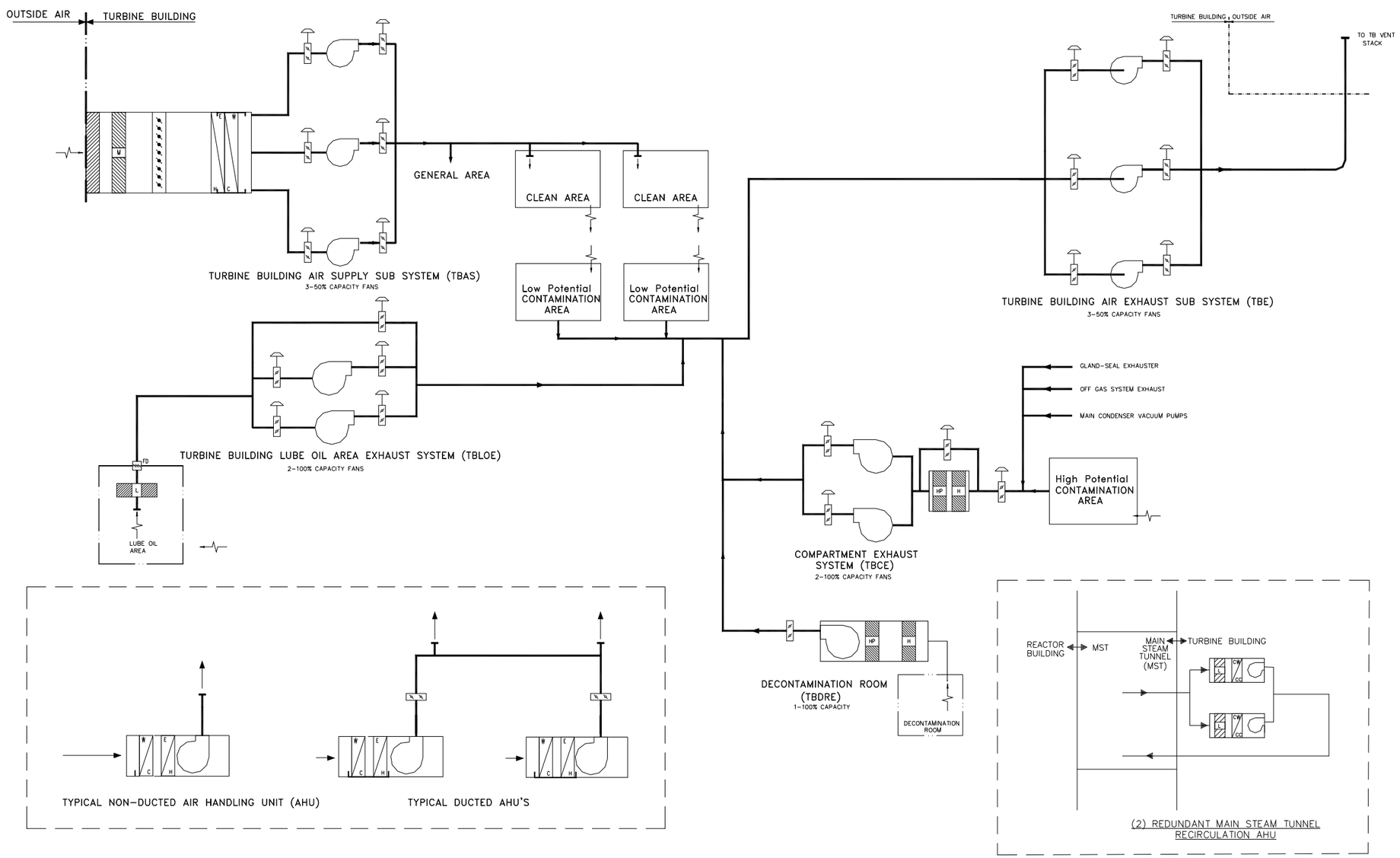

Figure 2.16.2-6. TBVS Functional Arrangement Diagram

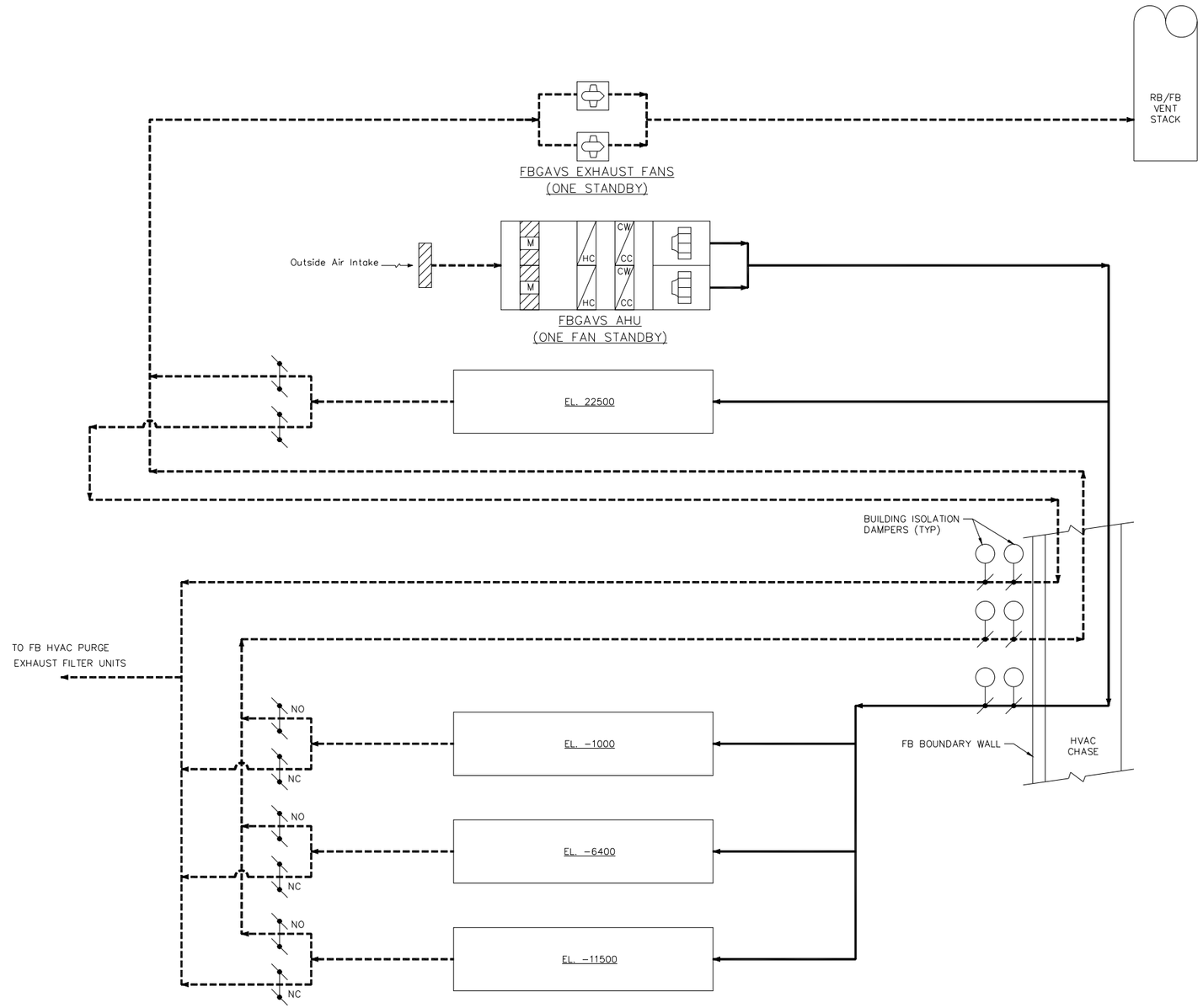

Figure 2.16.2-7. FBGAVS Functional Arrangement Diagram

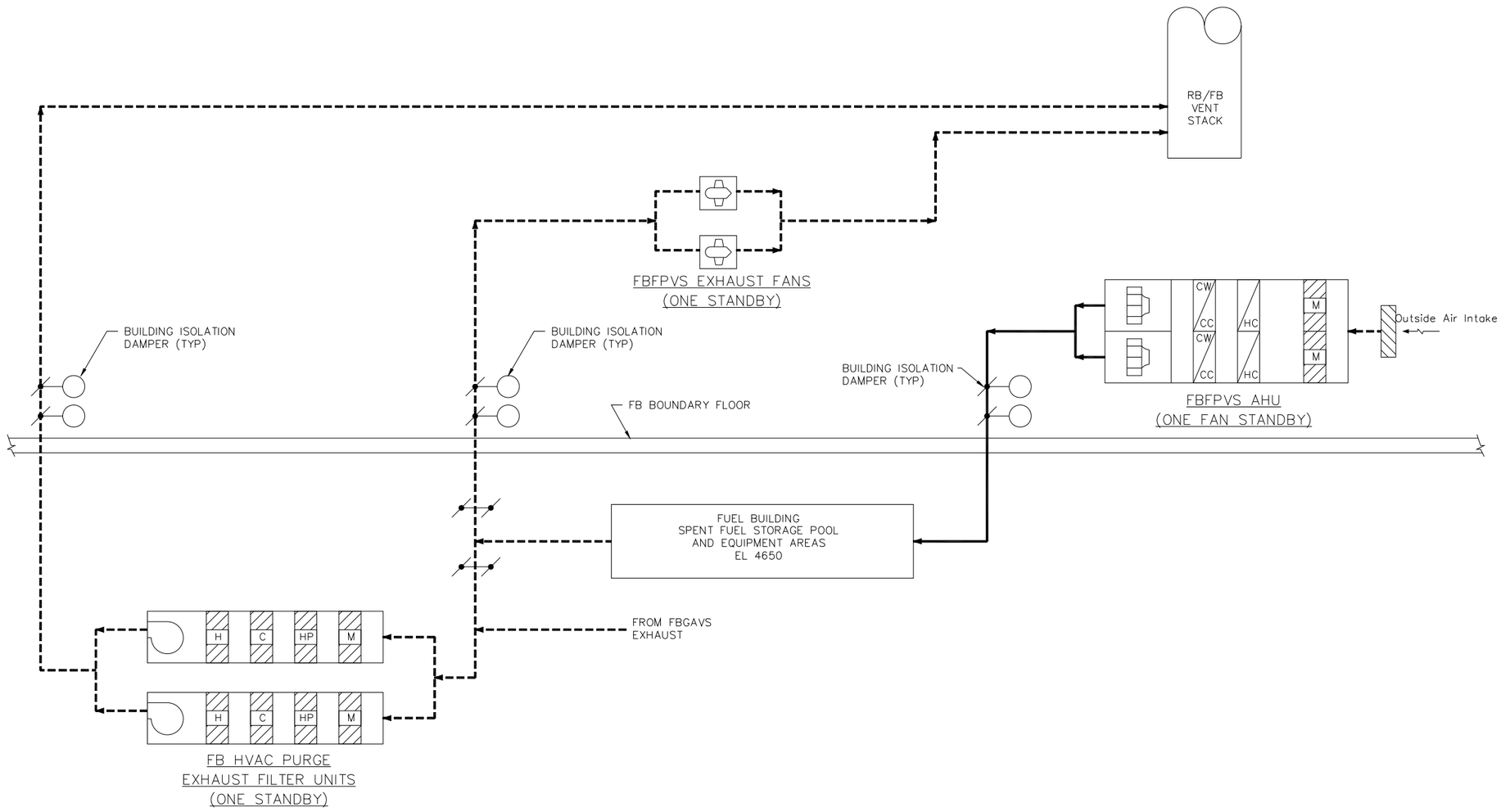

Figure 2.16.2-8. FBFPVS Functional Arrangement Diagram

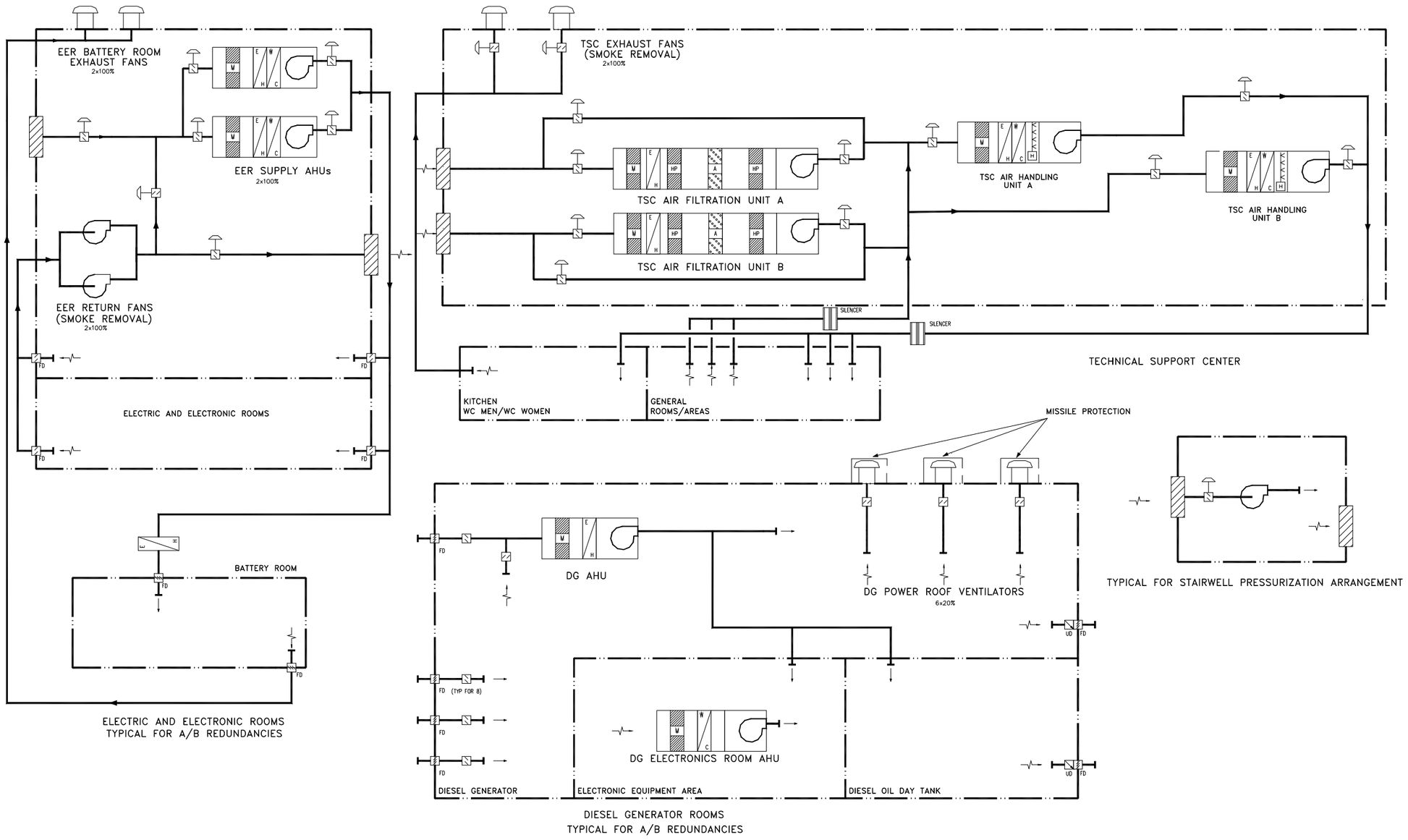

Figure 2.16.2-9. EBVS Functional Arrangement Diagram

2.16.3 Fire Protection System

Design Description

The Fire Protection System (FPS) is a nonsafety-related, integrated complex of components and equipment that detects and suppresses fires in the plant.

The FPS is a as shown in Figure 2.16.3-1 and the component locations of the FPS are as shown in Table 2.16.3-1

The MCR set of displays, alarms and controls, based on the applicable codes and standards, including Human Factors Engineering (HFE) evaluations and emergency procedure guidelines, is addressed in Section 3.3.

(1) The functional arrangement of the FPS is as described in the Design Description of this Subsection 2.16.3 and as shown on Figure 2.16.3-1.

(2) The FPS components and piping identified in Table 2.16.3-1 and Table 2.16.3-1 remain functional during and after an SSE.

(3) The FPS provides for manual fire suppression capability to plant areas containing safety-related equipment.

(4) a. The FPS provides the primary storage tanks that contain the required combined minimum usable fire water storage capacity.

b. The FPS provides the designated site-specific secondary firewater storage source contains the combined minimum usable firewater storage capacity.

(5) Each fire pump provides the required minimum discharge flow with adequate pressure.

(6) Smoke detectors provide fire detection capability and can be used to initiate fire alarms in areas containing safety-related equipment.

(7) a. The primary diesel-driven fire pump is available to provide post-72 hour makeup to the IC/PCCS pools or Spent Fuel Pool.

b. The fuel oil tank for the primary diesel-driven fire pump contains adequate fuel oil capacity to support the function of providing makeup water from 72 hours to 7 days after an accident.

(8) (Deleted)

Inspections, Tests, Analyses, and Acceptance Criteria

Table 2.16.3-2 provides a definition of the inspections, test and analyses, together with associated acceptance criteria for the Fire Protection System.

Table 2.16.3-1

Fire Protection System Equipment

Principal Components	Location(s)	Seismic Category
Seismic Category I piping loop and valves including supports providing source of makeup water to IC/PCCS and fuel pools	OO	I
Primary fire water storage tanks	OO	I
Fire pump enclosure	OO	I
Primary diesel-driven fire pump	OO	I
Primary diesel fire pump fuel tank	OO	I
Seismic Category II piping and valves including supports (includes balance of primary piping and valves)	OO, RB, CB, FB	II
Primary motor-driven fire pump and primary jockey pump	OO	II

Location codes:

CB = Control Building
RB = Reactor Building
OO = Outdoors Onsite
FB = Fuel Building

Table 2.16.3-2

ITAAC For The Fire Protection System

Design Commitment	Inspections, Tests, Analyses	Acceptance Criteria
1. The functional arrangement of the FPS is as described in Subsection 2.16.3 and as shown on Figure 2.16.3-1.	Inspection of the as-built system will be conducted.	The as-built FPS conforms with the basic configuration contained in the Design Description of Subsection 2.16.3 and Figure 2.16.3-1.
2. The FPS components and piping identified in Table 2.16.3-1 and Table 2.16.3-1 remain functional during and after an SSE.	i. Analysis of the FPS components and piping identified in Table 2.16.3-1 will be performed to demonstrate that the components and piping will remain functional during and after an SSE. ii. Inspection of the as-built FPS components and piping identified in Table 2.16.3-1 will be performed to verify that the components and piping are installed in accordance with the configurations specified by the analyses.	i. Analyses demonstrate that the FPS components and piping identified in Table 2.16.3-1 and Table 2.16.3-1 will remain functional during and after an SSE. ii. The as-built components and piping identified in Table 2.16.3-1 are installed in accordance with the configurations specified by the analyses.

Table 2.16.3-2

ITAAC For The Fire Protection System

Design Commitment	Inspections, Tests, Analyses	Acceptance Criteria
3. The FPS provides for manual fire suppression capability to plant areas containing safety-related equipment.	The following inspections will be performed:	The as-built manual fire suppression system has the following features:
	i. Inspection of the as-built manual fire suppression system outside the Containment not protected by a fixed fire suppression system will be performed to verify that any location that contains or could present a hazard to safety-related equipment can be reached by two effective hose streams with a maximum of 30.5 meters (100 feet) of hose.	i. Standpipe and hose rack stations are located such that any safety-related equipment outside Containment not protected by a fixed fire suppression system can be reached by an effective hose stream 9.1 m (30 ft) with a maximum of 30.5 m (100 ft) of hose from each of two hose stations on separate standpipes.
	ii. Inspection of the as-built manual fire suppression system will be performed to verify that any location outside Containment protected by a fixed fire suppression system that contains or could present a hazard to safety-related equipment can be reached by at least one hose stream with a maximum of 30.5 meters (100 feet) of hose.	ii. Standpipe and hose rack stations are located such that any safety-related equipment outside Containment protected by a fixed fire suppression system can be reached by an effective hose stream 9.1 m (30 ft) with a maximum of 30.5 m (100 ft) of hose from at least one hose station.

Table 2.16.3-2

ITAAC For The Fire Protection System

Design Commitment	Inspections, Tests, Analyses	Acceptance Criteria
	iii. Inspection of the as-built manual fire suppression system will be performed to verify that any location within Containment can be reached by two effective hose streams with a maximum of 61 meters (200 feet) of hose.	iii. Standpipe and hose rack stations are located such that any location within Containment can be reached by an effective hose stream 9.1 m (30 ft) with a maximum of 61 m (200 ft) of hose from each of two hose stations on separate standpipes.
4a. The FPS provides the primary storage tanks that contain the required combined minimum usable firewater storage capacity.	Inspection of the as-built water supply sources and volumetric calculations using as-built dimensions will be performed.	The as-built water supply sources meet the volumetric requirements of a combined minimum usable firewater storage capacity of ≥3900 m^3 (1,030,000 gallons) as specified in the Certified Design Commitment.
4b. The FPS provides the designated site-specific secondary firewater storage source contains the combined minimum usable firewater storage capacity.	Inspection of the as-built water supply sources and volumetric calculations using as-built dimensions will be performed.	The as-built water supply sources meet the volumetric requirements of ≥2082 m^3 (550,000 gallons).
5. Each fire pump provides the required minimum discharge flow with adequate pressure.	i. Testing or analysis (or both) of each fire pump will be performed to demonstrate that each fire pump provides a flow rate of at least 484 m^3/hr (2130 gpm).	i. Each fire pump provides a flow rate of at least 484 m^3/hr (2130 gpm).

Table 2.16.3-2

ITAAC For The Fire Protection System

Design Commitment	Inspections, Tests, Analyses	Acceptance Criteria
	ii. Testing will be performed to demonstrate rated flow and rated water pressure at the most hydraulically remote standpipes in the Turbine Building and the Reactor Building.	ii. Acceptable flow and rated pressure at the most hydraulically remote Turbine Building and Reactor standpipe - a.) 40 mm (1.5 inch) hoses; total flow of 22.7 m^3/hr (100 gpm) at a minimum pressure of 448.2 kPaG (65 psig) and b.) 65 mm (2.5 inch) hoses; total flow of 113.5 m^3/hr (500 gpm) at a minimum pressure of 689 kPaG (100 psig).
6. Smoke detectors provide fire detection capability and can be used to initiate fire alarms in areas containing safety-related equipment.	Testing will be performed on the as-built individual fire detectors in areas containing safety-related equipment by providing a simulated fire condition.	The as-built individual smoke detectors respond to simulated fire conditions and initiate fire alarms in areas containing safety-related equipment.
7a. The primary diesel-driven fire pump is available to provide post-72 hour makeup to the IC/PCCS pools or Spent Fuel Pool.	Test will be performed to demonstrate that the primary diesel-driven fire pump starts on a manual signal and supplies a minimum of 46 m^3/hr (≥200 gpm) makeup water to the IC/PCCS pool or the Spent Fuel Pool.	The primary diesel-driven fire pump starts on a manual signal and supplies a minimum of 46 m^3/hr (≥200 gpm) makeup water to the IC/PCCS pools or Spent Fuel Pool.
7b. The fuel oil tank for the primary diesel-driven fire pump contains adequate fuel oil capacity to support the function of providing makeup water from 72 hours to 7 days after an accident	The as-built primary diesel-driven fire pump fuel oil tank capacity will be calculated.	The as-built fuel oil tanks for the diesel-driven fire pumps have greater than a 3.79 m^3 (1000 gallon) capacity to support the function of providing makeup water from 72 hours to 7 days after an accident before refilling based upon the as-built fuel tanks and fuel consumption rates and margin criteria provided in NFPA 24.
8. (Deleted)		

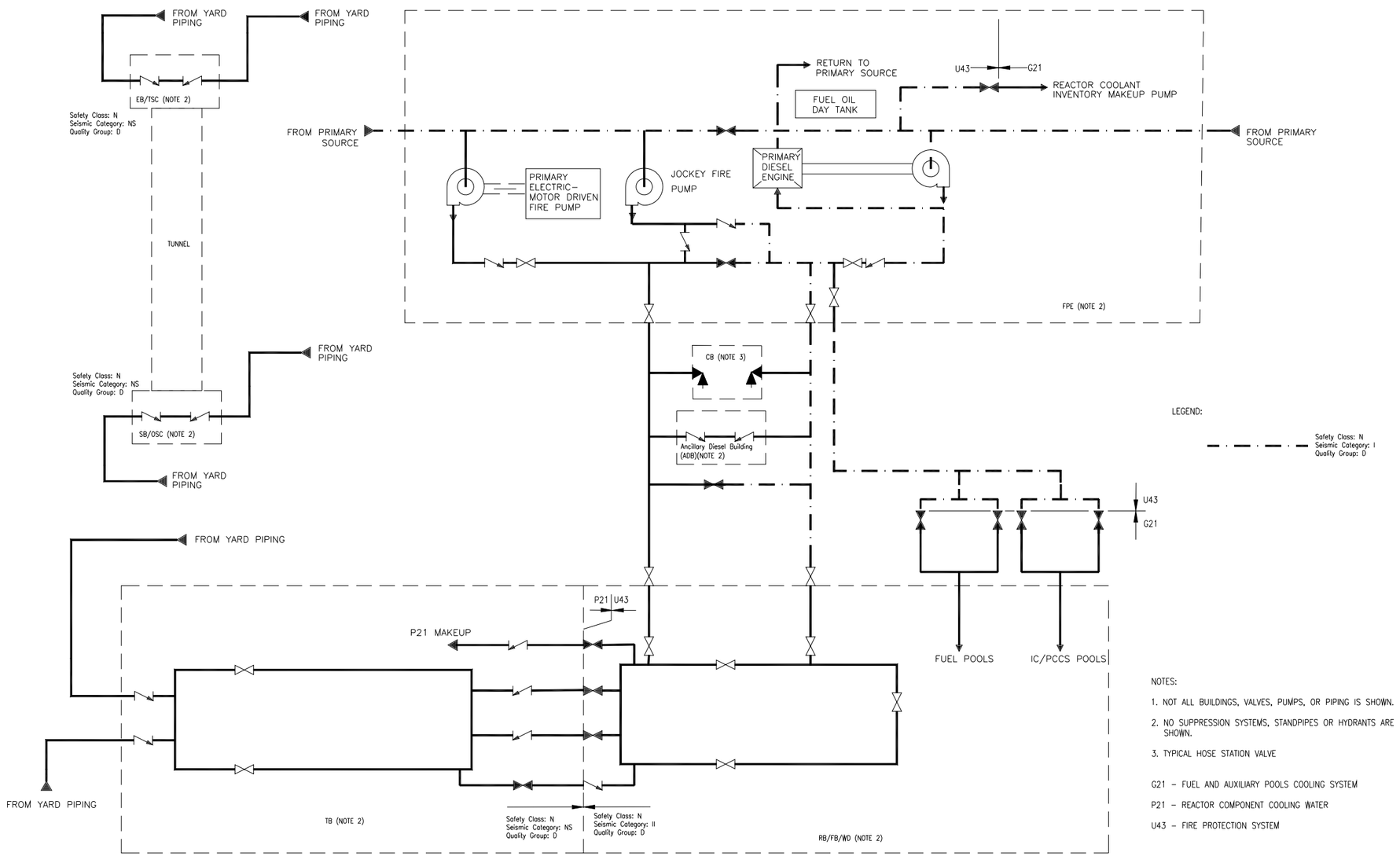

Figure 2.16.3-1. Fire Protection System

2.16.3.1 Fire Barriers

Design Description

A Fire Barrier is a continuous vertical or horizontal fire-resistance rated construction assembly designed and constructed to limit the spread of heat and fire and to restrict the movement of smoke. Fire dampers protect ventilation duct openings in fire barriers.

(1) Fire barriers of three-hour fire resistance rating are provided that separate:

- Safety-related systems from any potential fires in nonsafety-related areas that could affect the ability of safety-related systems to perform their safety function.
- Redundant divisions or trains of safety-related systems from each other to prevent damage that could adversely affect a safe shutdown function from a single fire.
- Components within a single safety-related electrical division that present a fire hazard to components in another safety-related division.
- Electrical circuits (safety-related and nonsafety-related) whose fire-induced failure could cause a spurious actuation that could adversely affect a safe shutdown function.

(2) Penetrations through fire barriers are sealed or closed to provide fire resistance ratings at least equal to that of the barriers, and elevator doors will have a minimum fire rating of 1.5 hours.

(3) Fire dampers protect ventilation duct openings in fire barriers.

(4) Exposed structural steel protecting areas containing safety-related equipment is fireproofed with material with a fire rating of up to 3 hours as determined from the Fire Hazards Analysis (FHA).

(5) The exposure of the distributed control and information system (Q-DCIS and N-DCIS) equipment to heat and smoke caused by a fire in a single fire area does not cause spurious actuations that could adversely affect safe shutdown.

Inspections, Tests, Analyses, and Acceptance Criteria

Table 2.16.3.1-1 provides a definition of the inspections, test and analyses, together with associated acceptance criteria for the Fire Barriers.

Table 2.16.3.1-1

ITAAC For Fire Barriers

Design Commitment	Inspections, Tests, Analyses	Acceptance Criteria
1. Fire barriers of three-hour fire resistance rating are provided that separate: • Safety-related systems from any potential fires in nonsafety-related areas that could affect the ability of safety-related systems to perform their safety function. • Redundant divisions or trains of safety-related systems from each other to prevent damage that could adversely affect a safe shutdown function from a single fire. • Components within a single safety-related electrical division that present a fire hazard to components in another safety-related division. • Electrical circuits (safety-related and nonsafety-related) whose fire-induced failure could cause a spurious actuation that could adversely affect a safe shutdown function.	Inspections will assure 3-hour fire barriers are installed.	All locations listed in Subsection 2.16.3.1 are protected by 3-hour fire barriers.

Table 2.16.3.1-1

ITAAC For Fire Barriers

Design Commitment	Inspections, Tests, Analyses	Acceptance Criteria
2. Penetrations through fire barriers are sealed or closed to provide fire resistance ratings at least equal to that of the barriers, and elevator doors will have a minimum fire rating of 1.5 hours.	Inspections will confirm that as-built penetrations through fire barriers are sealed or closed to provide fire resistance ratings at least equal to that required of the barriers (elevator doors at 1.5 hours).	The as-built penetrations through fire barriers provide fire resistance ratings at least equal to that required of the barriers and that elevator doors have a minimum rating of 1.5 hours.
3. Fire dampers protect ventilation duct openings in fire barriers.	Inspections will be performed to confirm the presence of fire dampers in ventilation duct openings.	The presence of fire dampers in ventilation duct openings, consistent with the fire areas identified in Table 2.16.3.1-1.
4. Exposed structural steel protecting areas containing safety-related equipment is fireproofed with material with a fire rating of up to three hours as determined from the FHA.	Inspections will be performed to confirm the presence of fireproofing on structural steel protecting areas containing safety-related equipment.	The presence of fireproofing on structural steel protecting areas containing safety-related equipment with material with a fire rating of up to three hours as determined from the FHA.
5. The exposure of the distributed control and information system (Q-DCIS and N-DCIS) equipment to heat and smoke caused by a fire in a single fire area does not cause spurious actuations that could adversely affect safe shutdown.	Inspections, tests and /or analyses will be performed to show that the exposure of the distributed control and information system (Q-DCIS and N-DCIS) equipment to smoke and heat caused by a fire in a single fire area does not cause spurious actuations that could adversely affect safe shutdown.	The exposure of the distributed control and information system (Q-DCIS and N-DCIS) equipment to smoke and heat caused by a fire in a single fire area does not cause spurious actuations that could adversely affect safe shutdown.

2.16.4 Equipment and Floor Drain System

Design Description

The Equipment and Floor Drain System (EFDS) collects waste liquids from their point of origin and transfers them to a suitable processing or disposal system. The Reactor Coolant Pressure Boundary (RCPB) leakage detection systems utilize features of the EFDS to provide a means of detecting and, to the extent practical, identifying the source of the reactor coolant leakage.

The detection of small, unidentified leakage within the DW is accomplished by monitoring the DW floor drain high conductivity waste (HCW) sump pump activity and the DW sump level changes.

The detection of small, identified leakage within the DW is accomplished by monitoring the DW equipment drain low conductivity waste (LCW) sump pump activity and sump level increases.

The containment isolation portion of the EFDS is addressed in Subsection 2.15.1.

(1) The functional arrangement of the EFDS is as described in this Subsection 2.16.4.

(2) The EFDS collects liquid wastes from floor drainage in the DW and directs these wastes to the DW floor drain high conductivity waste (HCW) sump.

(3) The EFDS collects liquid wastes emanating from equipment in the DW and directs these wastes to the DW equipment drain low conductivity waste (LCW) sump.

(4) (Deleted)

Inspections, Tests, Analyses, and Acceptance Criteria

Table 2.16.4-1 provides a definition of the inspections, test and analyses, together with associated acceptance criteria for the Equipment and Floor Drain System.

Table 2.16.4-1

ITAAC For The Equipment and Floor Drain System

Design Commitment	Inspections, Tests, Analyses	Acceptance Criteria
1. The functional arrangement of the EFDS is as described in Subsection 2.16.4.	Inspections of the as-built EFDS will be performed.	The as-built EFDS conforms with the description in Subsection 2.16.4.
2. The EFDS collects liquid wastes from floor drainage in the DW and directs these wastes to the DW floor drain high conductivity waste (HCW) sump.	A test will be performed by pouring water into the floor drains in the DW inside the containment boundary.	The water poured into these drains is collected in the DW floor drain high conductivity waste (HCW) sump.
3. The EFDS collects liquid wastes emanating from equipment in the DW and directs these wastes to the DW equipment drain low conductivity waste (LCW) sump.	A test will be performed by pouring water into equipment leak-off lines in the DW inside the containment boundary.	The water poured into these leak-off lines is collected in the DW equipment drain low conductivity waste (LCW) sump.
4. (Deleted)		

2.16.5 Reactor Building

Design Description

The Reactor Building (RB) houses the reactor system, reactor support and safety systems, concrete containment, essential power supplies and equipment, steam tunnel, and refueling area. On the upper floor of the RB are the new fuel pool and small spent fuel storage area, dryer/separator storage pool, refueling and fuel handling systems, the upper connection to the Fuel Transfer System and the overhead crane. The Isolation Condenser/Passive Containment Cooling System pools are below the refueling floor.

The RB structure is integrated with a reinforced concrete containment vessel (RCCV); the RCCV is located on a common basemat with the RB. The RB is a rigid box type shear wall building. The external walls form a box surrounding a large cylindrical containment. The RB shares a common wall and sits on a large common basemat with the Fuel Building. The RB is a safety-related, Seismic Category I structure. The building is partially below grade.

The key characteristics of the RB are as follows:

(1) The RB is designed and constructed to accommodate the dynamic, static and thermal loading conditions associated with the various loads and load combinations, which form the structural design basis. The loads are (as applicable) those associated with:

- Natural phenomena—wind, floods, tornados (including tornado missiles), earthquakes, rain and snow.
- Internal events—floods, pipe breaks including LOCA and missiles.
- Normal plant operation—live loads, dead loads, temperature effects and building vibration loads.

(2) The functional arrangement of the RB is as described in the Design Description of this Subsection 2.16.5 and is as shown in Figures 2.16.5-1 through 2.16.5-11.

(3) The critical dimensions used for seismic analyses and the acceptable tolerances are provided in Table 2.16.5-1.

(4) The RB Contaminated Area Ventilation Subsystem (CONAVS) area design provides a holdup volume and delays release of radioactivity to the environment consistent with the LOCA dose analysis maximum exfiltration assumptions.

(5) The RB provides three-hour fire barriers for separation of the four independent safe shutdown divisions.

(6) For external flooding, the RB incorporates structural provisions into the plant design to protect the structures, systems, or components from postulated flood and groundwater conditions. This approach provides:

- Wall thicknesses below flood level designed to withstand hydrostatic loads;
- Water stops in all expansion and construction joints below design basis maximum flood and groundwater levels;

- Waterproofing of external surfaces below design basis maximum flood and groundwater levels;
- Water seals in external walls at pipe and electrical penetrations below design basis maximum flood and groundwater levels; and
- Roofs designed to prevent pooling of large amounts of water in excess of the structural capacity of the roof for design loads.
- Exterior access opening sealed in external walls below flood and groundwater levels.

(7) Protective features used to mitigate or eliminate the consequences of internal flooding are:

- Structural enclosures or barriers
- Curbs and sills
- Leakage detection components
- Drainage systems

(8) The internal flooding protection features prevent flood water in one division from propagating to other division(s) and ensure equipment necessary for safe shutdown is located above the maximum flood level for that location or is qualified for flood conditions by:

- Divisional walls
- Sills
- Watertight doors

(9) The RB is protected against pressurization effects associated with postulated rupture of pipes containing high-energy fluid that occur in subcompartments of the RB.

(10) The Reactor Building CONAVS area volume meets design assumptions for the mixing of fission products following a LOCA.

(11) RTNSS equipment in the RB is located above the maximum flood level for that location or is qualified for flood conditions.

(12) The buffer pool is a reinforced concrete structure with a stainless steel liner that is equipped with embedments designed to Seismic Category I requirements.

(13) Doors that connect the RB with the EB galleries are watertight for flooding of the galleries up to the ground level elevation.

Inspections, Tests, Analyses, and Acceptance Criteria

Table 2.16.5-2 provides a definition of the inspections, tests and analyses, together with associated acceptance criteria for the RB.

Table 2.16.5-1

Critical Dimensions of Reactor Building – Part 1

Label	Wall or Section Description	Column Line or Region	Floor Elevation or Elevation Range (EL: mm)	Concrete Thickness* mm (ft-in)	Tolerance* mm (in)
	Concrete Containment				
101	RPV Pedestal Cylinder	Not Applicable	From -10400 to 4650	2500 (8'-2⅜")	+60,-0 (+2 ⅜",-0)
102	RCCV Cylinder	Not Applicable	From 4650 to 24600	2000 (6'-6 ¾")	+60,-0 (+2 ⅜",-0)
103	Containment Basemat	Below RPV Pedestal Cylinder	-10400	5100 (16'-8 ¾")	+50,-20 (2",-¾ ")
104	Suppression Pool Slab	Between RPV Pedestal Cylinder and RCCV Cylinder	4650	2000 (6'-6 ¾")	+60,-0 (+2 ⅜",-0)
105	Top Slab	From DW Head to RCCV Cylinder	27000	2400 (7'-10 ½")	+60,-0 (+2 ⅜",-0)
	Outside Concrete Containment				
1	Wall at Column Line R1	From RA to RG	From -11500 to 3650	2000 (6'-6 ¾")	+25,-20 (+1",- ¾")
2	Wall at Column Line R7	From RA to RG	From -11500 to 3650	2000 (6'-6 ¾")	+25,-20 (+1",- ¾")
3	Wall at Column Line RA	From R1 to R7	From -11500 to 3650	2000 (6'-6 ¾")	+25,-20 (+1",- ¾")
4	Wall at Column Line RG	From R1 to R7	From -11500 to 3650	2000 (6'-6 ¾")	+25,-20 (+1",- ¾")
5	Wall between Column Lines R1 and R2	From between RA and RB to RC	From -11500 to -7400	1000 (3'-3 ⅜")	+25,-20 (+1",- ¾")
6	Wall between Column Lines R1 and R2	From RE to between RF and RG	From -11500 to -7400	1000 (3'-3 ⅜")	+25,-20 (+1",- ¾")

Table 2.16.5-1

Critical Dimensions of Reactor Building – Part 1

Label	Wall or Section Description	Column Line or Region	Floor Elevation or Elevation Range (EL: mm)	Concrete Thickness* mm (ft-in)	Tolerance* mm (in)
7	Wall between Column Lines RA and RB	From between R1 and R2 to R3	From -11500 to -7400	1000 (3'-3 ⅜")	+25,-20 (+1",- ¾")
8	Wall between Column Lines RF and RG	From between R1 and R2 to R3	From -11500 to -7400	1000 (3'-3 ⅜")	+25,-20 (+1",- ¾")
9	Cylinder below RCCV	Not Applicable	From -11500 to 2650	2000 (6'-6 ¾")	+60,-0 (+2 ⅜",-0)
10	Cylinder between RPV Pedestal and Cylinder below RCCV	Northeast Quadrant	From -11500 to -1700	1400 (4'-7 ⅛")	Minimum
11	Cylinder between RPV Pedestal and Cylinder below RCCV	Northwest Quadrant	From -11500 to -1700	1400 (4'-7 ⅛")	Minimum
12	Cylinder between RPV Pedestal and Cylinder below RCCV	Southwest Quadrant	From -11500 to -1700	600 (1'-11 ⅝")	Minimum
13	Cylinder between RPV Pedestal and Cylinder below RCCV	Southeast Quadrant	From -11500 to -7400	600 (1'-11 ⅝")	Minimum
14	Cylinder between RPV Pedestal and Cylinder below RCCV	Southeast Quadrant	From -6400 to -1900	1350 (4'-5 ⅛")	Minimum
15	Wall at Column Line R1	From RA to RG	From 4650 to 16500	1500 (4'-11")	+25,-20 (+1",- ¾")
16	Wall at Column Line R7	From RA to RG	From 4650 to 16500	1500 (4'-11")	+25,-20 (+1",- ¾")
17	Wall at Column Line RA	From R1 to R7	From 4650 to 25500	1500 (4'-11")	+25,-20 (+1",- ¾")
18	Wall at Column Line RG	From R1 to R7	From 4650 to 25500	1500 (4'-11")	+25,-20 (+1",- ¾")

Table 2.16.5-1

Critical Dimensions of Reactor Building – Part 1

Label	Wall or Section Description	Column Line or Region	Floor Elevation or Elevation Range (EL: mm)	Concrete Thickness* mm (ft-in)	Tolerance* mm (in)
19	Wall at Column Line R1	From RA to RC	From 17500 to 25500	1500 (4'-11")	+25,-20 (+1",- ¾")
20	Wall at Column Line R1	From RE to RG	From 17500 to 25500	1500 (4'-11")	+25,-20 (+1",- ¾")
21	Wall at Column Line R7	From RA to RC	From 17500 to 25500	1500 (4'-11")	+25,-20 (+1",- ¾")
22	Wall at Column Line R7	From between RD and RE to RG	From 17500 to 25500	1500 (4'-11")	+25,-20 (+1",- ¾")
23	Main Steam Tunnel Wall	East side	From 17500 to 24600	1300 (4'-3⅛")	+25,-20 (+1",- ¾")
24	Main Steam Tunnel Wall	West side	From 17500 to 24600	1300 (4'-3⅛")	+25,-20 (+1",- ¾")
25	Wall at Column Line R1	From RA to RB	From 27000 to 33000	1000 (3'-3 ⅜")	+25,-20 (+1",- ¾")
26	Wall at Column Line R1	From RB to RC	From 27000 to 33000	1500 (4'-11")	+25,-20 (+1",- ¾")
27	Wall at Column Line R1	From RC to RE	From 27000 to 34000	3500 (11'-5¾")	+25,-20 (+1",- ¾")
28	Wall at Column Line R1	From RE to RF	From 27000 to 33000	1500 (4'-11")	+25,-20 (+1",- ¾")
29	Wall at Column Line R1	From RF to RG	From 27000 to 33000	1000 (3'-3 ⅜")	+25,-20 (+1",- ¾")
30	Wall at Column Line R2	From RA to RC	From 27000 to 33000	1000 (3'-3 ⅜")	+25,-20 (+1",- ¾")

Table 2.16.5-1

Critical Dimensions of Reactor Building – Part 1

Label	Wall or Section Description	Column Line or Region	Floor Elevation or Elevation Range (EL: mm)	Concrete Thickness* mm (ft-in)	Tolerance* mm (in)
31	Wall at Column Line R2	From RE to RG	From 27000 to 33000	1000 (3'-3 ⅜")	+25,-20 (+1",- ¾")
32	Wall at Column Line R6	From RA to RC	From 27000 to 33000	1000 (3'-3 ⅜")	+25,-20 (+1",- ¾")
33	Wall at Column Line R6	From RE to RG	From 27000 to 33000	1000 (3'-3 ⅜")	+25,-20 (+1",- ¾")
34	Wall at Column Line R7	From RA to RB	From 27000 to 33000	1000 (3'-3 ⅜")	+25,-20 (+1",- ¾")
35	Wall at Column Line R7	From RB to between RC and RD	From 27000 to 33000	1500 (4'-11")	+25,-20 (+1",- ¾")
36	Wall at Column Line R7	From between RC and RD to RE	From 27000 to 34000	2440 (8'-0")	+25,-20 (+1",- ¾")
37	Wall at Column Line R7	From RE to RF	From 27000 to 33000	1500 (4'-11")	+25,-20 (+1",- ¾")
38	Wall at Column Line R7	From RF to RG	From 27000 to 33000	1000 (3'-3 ⅜")	+25,-20 (+1",- ¾")
39	Wall at Column Line RA	From R1 to R7	From 27000 to 33000	1000 (3'-3 ⅜")	+25,-20 (+1",- ¾")
40	Wall at Column Line RB	From R1 to R7	From 27000 to 33000	2000 (6'-6 ¾")	+25,-20 (+1",- ¾")
41	Wall between Column Lines RB and RC	From R6 to R7	From 27000 to 33000	1000 (3'-3 ⅜")	+25,-20 (+1",- ¾")
42	Wall at Column Line RC (Pool Girder)	From R1 to R7	From 27000 to 33000	1600 (5'-3")	+25,-20 (+1",- ¾")

Table 2.16.5-1

Critical Dimensions of Reactor Building – Part 1

Label	Wall or Section Description	Column Line or Region	Floor Elevation or Elevation Range (EL: mm)	Concrete Thickness* mm (ft-in)	Tolerance* mm (in)
43	Wall at Column Line RE (Pool Girder)	From R1 to R7	From 27000 to 33000	1600 (5'-3")	+25,-20 (+1",- ¾")
44	Wall between Column Lines RE and RF	From R6 to R7	From 27000 to 33000	1000 (3'-3 ⅜")	+25,-20 (+1",- ¾")
45	Wall at Column Line RF	From R1 to R7	From 27000 to 33000	2000 (6'-6 ¾")	+25,-20 (+1",- ¾")
46	Wall at Column Line RG	From R1 to R7	From 27000 to 33000	1000 (3'-3 ⅜")	+25,-20 (+1",- ¾")
47	Reactor Cavity Wall (Northeast side)	From RC to between RC and RD	From 27000 to 34000	1600 (5'-3")	+25,-20 (+1",- ¾")
48	Reactor Cavity Wall (Northwest side)	From between RD and RE to RE	From 27000 to 34000	1600 (5'-3")	+25,-20 (+1",- ¾")
49	Reactor Cavity Wall (Southeast side)	From RC to between RC and RD	From 27000 to 34000	1600 (5'-3")	+25,-20 (+1",- ¾")
50	Not used				
51	IC/PCCS Pool Wall between Column Lines R2 and R3	From between RB and RC to RC	From 27000 to 33000	1000 (3'-3 ⅜")	+25,-20 (+1",- ¾")
52	IC/PCCS Pool Wall between Column Lines R2 and R3	From RE to between RE and RF	From 27000 to 33000	1000 (3'-3 ⅜")	+25,-20 (+1",- ¾")
53	IC/PCCS Pool Wall at Column Line R3	From between RB and RC to RC	From 27000 to 33000	400 (1'-3¾")	+15,-10 (+ ½",-⅜")
54	IC/PCCS Pool Wall at Column Line R3	From RE to between RE and RF	From 27000 to 33000	400 (1'-3¾")	+15,-10 (+ ½",-⅜")
55	IC/PCCS Pool Wall between Column Lines R3 and R4	From between RB and RC to RC	From 27000 to 33000	400 (1'-3¾")	+15,-10 (+ ½",-⅜")

Table 2.16.5-1

Critical Dimensions of Reactor Building – Part 1

Label	Wall or Section Description	Column Line or Region	Floor Elevation or Elevation Range (EL: mm)	Concrete Thickness* mm (ft-in)	Tolerance* mm (in)
56	IC/PCCS Pool Wall between Column Lines R3 and R4	From RE to between RE and RF	From 27000 to 33000	400 (1'-3¾")	+15,-10 (+ ½",-⅜")
57	IC/PCCS Pool Wall between Column Lines R4 and R5	From between RB and RC to RC	From 27000 to 33000	400 (1'-3¾")	+15,-10 (+ ½",-⅜")
58	IC/PCCS Pool Wall between Column Lines R4 and R5	From RE to between RE and RF	From 27000 to 33000	400 (1'-3¾")	+15,-10 (+ ½",-⅜")
59	IC/PCCS Pool Wall at Column Line R5	From between RB and RC to RC	From 27000 to 33000	400 (1'-3¾")	+15,-10 (+ ½",-⅜")
60	IC/PCCS Pool Wall at Column Line R5	From RE to between RE and RF	From 27000 to 33000	400 (1'-3¾")	+15,-10 (+ ½",-⅜")
61	IC/PCCS Pool Wall between Column Lines R5 and R6	From between RB and RC to RC	From 27000 to 33000	470 (1'-6 ½")	+15,-10 (+ ½",-⅜")
62	IC/PCCS Pool Wall between Column Lines R5 and R6	From RE to between RE and RF	From 27000 to 33000	470 (1'-6 ½")	+15,-10 (+ ½",-⅜")
63	IC/PCCS Pool Wall between Column Lines RB and RC	From between R2 and R3 to between R5 and R6	From 27000 to 33000	1000 (3'-3⅜")	+15,-10 (+ ½",-⅜")
64	IC/PCCS Pool Wall at Column Line RC	From R2 to between R2 and R3	From 27000 to 33000	1000 (3'-3 ⅜")	+25,-20 (+1",- ¾")
65	IC/PCCS Pool Wall at Column Line RE	From R2 to between R2 and R3	From 27000 to 33000	1000 (3'-3 ⅜")	+25,-20 (+1",- ¾")
66	IC/PCCS Pool Wall between Column Lines RE and RF	From between R2 and R3 to between R5 and R6	From 27000 to 33000	1000 (3'-3⅜")	+15,-10 (+ ½",-⅜")
67	Wall at Column Line R1	From RB to RF	From 34000 to 52000	1000 (3'-3 ⅜")	+25,-20 (+1",- ¾")

Table 2.16.5-1

Critical Dimensions of Reactor Building – Part 1

Label	Wall or Section Description	Column Line or Region	Floor Elevation or Elevation Range (EL: mm)	Concrete Thickness* mm (ft-in)	Tolerance* mm (in)
68	Wall at Column Line R7	From RB to RF	From 34000 to 52000	1000 (3'-3 ⅜")	+25,-20 (+1",- ¾")
69	Wall at Column Line RB	From R1 to R7	From 34000 to 52000	1000 (3'-3 ⅜")	+25,-20 (+1",- ¾")
70	Wall at Column Line RF	From R1 to R7	From 34000 to 52000	1000 (3'-3 ⅜")	+25,-20 (+1",- ¾")
71	Basemat excluding Containment Basemat	From R1 to R7 and RA and RG	-11500	4000 (13'-1½")	+50,-20 (2",-¾ ")
72	Floor inside Cylinder below RCCV	Northeast Quadrant	-6400	600 (1'-11 ⅝")	+15,-10 (+ ½",-⅜")
73	Floor inside Cylinder below RCCV	Northwest Quadrant	-6400	600 (1'-11 ⅝")	+15,-10 (+ ½",-⅜")
74	Floor inside Cylinder below RCCV	Southeast Quadrant	-6400	1000 (3'-3 ⅜")	+25,-20 (+1",- ¾")
75	Floor inside Cylinder below RCCV	Southwest Quadrant	-6400	600 (1'-11 ⅝")	+15,-10 (+ ½",-⅜")
76	Floor outside Cylinder below RCCV	From R1 to R7 and RA and RG	-6400	1000 (3'-3 ⅜")	+25,-20 (+1"- ¾")
77	Floor inside Cylinder below RCCV	Northeast Quadrant	-1000	700 (2'-3⅝")	+15,-10 (+ ½",-⅜")
78	Floor inside Cylinder below RCCV	Northwest Quadrant	-1000	700 (2' 3⅝")	+15,-10 (+ ½",-⅜")
79	Floor inside Cylinder below RCCV	Southeast Quadrant	-1000	900 (2'-11½")	+15,-10 (+ ½",-⅜")

Table 2.16.5-1

Critical Dimensions of Reactor Building – Part 1

Label	Wall or Section Description	Column Line or Region	Floor Elevation or Elevation Range (EL: mm)	Concrete Thickness* mm (ft-in)	Tolerance* mm (in)
80	Floor inside Cylinder below RCCV	Southwest Quadrant	-1000	700 (2'-3⅝")	+15,-10 (+ ½",-⅜")
81	Floor outside Cylinder below RCCV	From R1 to R7 and RA to RG	-1000	1000 (3'-3 ⅜")	+25,-20 (+1",- ¾")
82	Floor	From R1 to R7 and RA to RG	4650	1000 (3'-3 ⅜")	+25,-20 (+1",- ¾")
83	Floor	From R1 to R7 and RA to RG	9060	1000 (3'-3 ⅜")	+25,-20 (+1",- ¾")
84	Floor	From R1 to R7 and RA to RG	13570	1000 (3'-3 ⅜")	+25,-20 (+1",- ¾")
85	Main Steam Tunnel Floor	From RC to RE	17500	1600 (5'-3")	+25,-20 (+1",- ¾")
86	Floor excluding Main Steam Tunnel Floor	From R1 to R7 and RA to RG	17500	1000 (3'-3 ⅜")	+25,-20 (+1",- ¾")
87	Main Steam Tunnel Roof	From RC to RE	27000	2400 (7'-10 ½")	+25,-20 (+1",- ¾")
88	Floor	From R1 to R7 and RA to RC	27000	1500 (4'-11")	+25,-20 (+1",- ¾")
89	Floor	From R1 to R7 and RE to RG	27000	1500 (4'-11")	+25,-20 (+1",- ¾")
90	Floor	From R1 to R7 and RA to RC	34000	1000 (3'-3 ⅜")	+25,-20 (+1",- ¾")
91	Floor	From R1 to R7 and RE to RG	34000	1000 (3'-3 ⅜")	+25,-20 (+1",- ¾")

Table 2.16.5-1

Critical Dimensions of Reactor Building – Part 1

Label	Wall or Section Description	Column Line or Region	Floor Elevation or Elevation Range (EL: mm)	Concrete Thickness* mm (ft-in)	Tolerance* mm (in)
92	Roof	From R1 to R7 and RB to RF	52700	700 (2'-3⅝")	+15,-10 (+½",-⅜")

* SI units are the controlling units and English units are for reference only.

Table 2.16.5-1

Critical Dimensions of Reactor Building – Part 2

Key Dimension	Reference Dimension	Nominal Dimension* mm (ft-in)	Tolerance* mm (ft)
Distance from RPV Centreline to Outside Surface of Wall at Column Line RA when Measured at Column Line R1	X1 (Figure 2.16.5-1)	24500 (80'-4 ½")	+/-300 (+/- 1')
Distance from RPV Centreline to Outside Surface of Wall at Column Line RG when Measured at Column Line R1	X2 (Figure 2.16.5-1)	24500 (80'-4 ½")	+/-300 (+/- 1')
Distance from RPV Centreline to Outside Surface of Wall at Column Line R1 when Measured at Column Line RA	X3 (Figure 2.16.5-1)	24500 (80'-4 ½")	+/-300 (+/- 1')
Distance from RPV Centreline to Outside Surface of Wall at Column Line R7 when Measured at Column Line RA	X4 (Figure 2.16.5-1)	24500 (80'-4 ½")	+/-300 (+/- 1')
Distance from Top of Basemat Outside Containment to Design Plant Grade	X5 (Figure 2.16.5-10)	16150 (53'-0")	+/-300 (+/- 1')
Distance from Design Plant Grade to Top Surface of Roof	X6 (Figure 2.16.5-10)	48050 (157'- 7 ¾")	+/-300 (+/- 1')

* SI units are the controlling units and English units are for reference only.

Table 2.16.5-2

ITAAC For The Reactor Building

Design Commitment	Inspections, Tests, Analyses	Acceptance Criteria
1. The RB is designed and constructed to accommodate the dynamic, static and thermal loading conditions associated with the various loads and load combinations, which form the structural design basis. The loads are (as applicable) those associated with: • Natural phenomena—wind, floods, tornados (including tornado missiles), earthquakes, rain and snow. • Internal events—floods, pipe breaks including LOCA and missiles. • Normal plant operation—live loads, dead loads, temperature effects and building vibration loads.	Analyses of the as-built RB will be conducted.	The as-built RB conforms to the structural design basis loads specified in the Design Description of this subsection 2.16.5 associated with: • Natural phenomena—wind, floods, tornados (including tornado missiles), earthquakes, rain and snow. • Internal events—floods, pipe breaks including LOCA and missiles. • Normal plant operation—live loads, dead loads, temperature effects and building vibration loads.
2. The functional arrangement of the RB is as described in the Design Description of this Subsection 2.16.5 and is as shown in Figures 2.16.5-1 through 2.16.5-11.	Inspections of the as-built RB will be conducted.	The RB conforms to the functional arrangement described in the Design Description of this Subsection 2.16.5 and is as shown in Figures 2.16.5-1 through 2.16.5-11.

Table 2.16.5-2

ITAAC For The Reactor Building

Design Commitment	Inspections, Tests, Analyses	Acceptance Criteria
3. The critical dimensions used for seismic analyses and the acceptable tolerances are provided in Table 2.16.5-1.	Inspection of the RB will be performed. Deviations from the design conditions will be analyzed using the design basis loads.	Reconciliation of construction deviations from the critical dimensions and tolerances specified in Table 2.16.5-1 will demonstrate that the as-built RB will withstand the design basis loads specified in the Design Description of this Subsection 2.16.5 without loss of structural integrity or the safety-related functions.
4. The RB CONAVS area design provides a holdup volume and delays release of radioactivity to the environment consistent with the LOCA dose analysis maximum exfiltration. assumptions .	Leakage rate testing of the as-built RB CONAVS area under a differential pressure of 62.3 Pa (0.25 in wg.) will be conducted.	The RB CONAVS area leakage rate under the conditions expected to exist during a LOCA is $\leq$ 141.6 l/s (300 cfm).
5. The RB provides three-hour fire barriers for separation of the four independent safe shutdown divisions.	Inspections of the as-built RB will be conducted.	Each division is separated by fire barriers having $\geq$ 3-hour fire ratings.

Table 2.16.5-2

ITAAC For The Reactor Building

Design Commitment	Inspections, Tests, Analyses	Acceptance Criteria
6. For external flooding, the RB incorporates structural provisions into the plant design to protect the structures, systems, or components from postulated flood and groundwater conditions. This approach provides: • Wall thicknesses below flood level designed to withstand hydrostatic loads; • Water stops in all expansion and construction joints below design basis maximum flood and groundwater levels; • Waterproofing of external surfaces below design basis maximum flood and groundwater levels; • Water seals in external walls at pipe and electrical penetrations below design basis maximum flood and groundwater levels; and • Roofs designed to prevent pooling of large amounts of water in excess of the structural capacity of the roof for design loads. • Exterior access opening sealed in external walls below flood and groundwater levels.	Inspection of the as-built flood control features will be conducted.	The as-built RB conforms with the following flood protection features specified in the Design Description of this subsection 2.16.5. • Wall thicknesses below flood level are designed to withstand hydrostatic loads; • Water stops in all expansion and construction joints below design basis maximum flood and groundwater levels; • Waterproofing of external surfaces below design basis maximum flood and groundwater levels; • Water seals in external walls at pipe penetrations below design basis maximum flood and groundwater levels; and • Roofs are built to prevent pooling of large amounts of water in excess of the structural capacity of the roof for design loads.

Table 2.16.5-2

ITAAC For The Reactor Building

Design Commitment	Inspections, Tests, Analyses	Acceptance Criteria
7. Protective features used to mitigate or eliminate the consequences of internal flooding are: • Structural enclosures or barriers • Curbs and sills • Leakage detection components • Drainage systems	Inspections of the as-built RB flood protection features will be conducted.	The following flood protection features specified in the Design Description 2.16.5 are in place in the as-built RB to mitigate or eliminate the consequences of internal flooding: • Structural enclosures or barriers • Curbs and sills • Leakage detection components • Drainage systems
8. The internal flooding protection features prevent flood water in one division from propagating to other division(s) and ensure equipment necessary for safe shutdown is located above the maximum flood level for that location or is qualified for flood conditions by: • Divisional walls • Sills • Watertight doors	Inspections of the as-built RB flood protection features will be conducted.	The following flood protection features specified in the Design Description 2.16.5 are in place in the as-built RB to prevent flood water in one division from propagating to other division(s) and to ensure equipment necessary for safe shutdown not located above the maximum flood level for that location is qualified for flood conditions: • Divisional walls • Sills • Watertight doors
9. The RB is protected against pressurization effects associated with postulated rupture of pipes containing high-energy fluid that occur in subcompartments of the RB.	Inspections of the RB subcompartments that rely on overpressure protection devices will be conducted.	The as-built RB subcompartments which rely on overpressure protection devices are equipped with over pressure protection devices specified in the Design Description 2.16.5.

Table 2.16.5-2

ITAAC For The Reactor Building

Design Commitment	Inspections, Tests, Analyses	Acceptance Criteria
10. The Reactor Building CONAVS area volume meets design assumptions for the mixing of fission products following a LOCA.	Inspections of the as-built dimensions of the areas in the RB credited in the design basis mixing analysis will be performed. The results will be compared to the calculation of the total mixing volume to verify that the results match the assumptions.	The as-built RB CONAVS area volume meets design assumptions for the mixing of fission products following a LOCA.
11. RTNSS equipment in the RB is located above the maximum flood level for that location or is qualified for flood conditions.	Inspections of the as-built RTNSS equipment in the RB will be conducted.	The as-built RTNSS equipment in the RB is located above the maximum flood level for that location or is qualified for flood conditions.
12. The buffer pool is a reinforced concrete structure with a stainless steel liner that is equipped with embedments designed to Seismic Category I requirements.	Inspection and analysis of the as-built buffer pool will be performed.	The as-built buffer pool is a reinforced concrete structure with a stainless steel liner that is equipped with embedments and can withstand seismic dynamic loads without loss of structural integrity.
13. Doors that connect the RB with the EB galleries are watertight for flooding of the galleries up to the ground level elevation.	Inspections of the doors for RB to EB galleries will be conducted.	The doors connecting the RB to EB are watertight doors.

Figure 2.16.5-1. RB Concrete Outline Plan at EL –11500

{{{Security-Related Information – Withheld Under 10 CFR 2.390}}}

Figure 2.16.5-2. RB Concrete Outline Plan at EL –6400

{{{Security-Related Information – Withheld Under 10 CFR 2.390}}}

Figure 2.16.5-3. RB Concrete Outline Plan at EL –1000

{{{Security-Related Information – Withheld Under 10 CFR 2.390}}}

Figure 2.16.5-4. RB Concrete Outline Plan at EL 4650

{{{Security-Related Information – Withheld Under 10 CFR 2.390}}}

Figure 2.16.5-5. RB Concrete Outline Plan at EL 9060

{{{Security-Related Information – Withheld Under 10 CFR 2.390}}}

Figure 2.16.5-6. RB Concrete Outline Plan at EL 13570

{{{Security-Related Information – Withheld Under 10 CFR 2.390}}}

Figure 2.16.5-7. RB Concrete Outline Plan at EL 17500

{{{Security-Related Information – Withheld Under 10 CFR 2.390}}}

Figure 2.16.5-8. RB Concrete Outline Plan at EL 27000

{{{Security-Related Information – Withheld Under 10 CFR 2.390}}}

Figure 2.16.5-9. RB Concrete Outline Plan at EL 34000

{{{Security-Related Information – Withheld Under 10 CFR 2.390}}}

Figure 2.16.5-10. RB Concrete Outline N-S Section

{{{Security-Related Information – Withheld Under 10 CFR 2.390}}}

Figure 2.16.5-11. RB Concrete Outline E-W Section

{{{Security-Related Information – Withheld Under 10 CFR 2.390}}}

2.16.6 Control Building

Design Description

The Control Building (CB) houses the essential electrical, control and instrumentation equipment, the Main Control Room (MCR), and the CB HVAC equipment. The CB is a reinforced concrete box type shear wall structure consisting of walls and slabs and is supported on a foundation mat. The CB structure is a Seismic Category I structure.

The key characteristics of the CB are as follows:

(1) The CB is designed and constructed to accommodate the dynamic, static, and thermal loading conditions associated with the various loads and load combinations, which form the structural design basis. The loads are those associated with:

- Natural phenomena—wind, floods, tornadoes (including tornado missiles), earthquakes, rain and snow.
- Internal events—floods
- Normal plant operation—live loads, dead loads and temperature effects.

(2) The functional arrangement of the CB is as described in the Design Description of this Subsection 2.16.6 and is as shown in Figures 2.16.6-1 through 2.16.6-5.

(3) The critical CB dimensions used for seismic analyses and the acceptable tolerances are provided in Table 2.16.6-1.

(4) The MCR envelope is separated from the rest of the CB by walls, floors, doors and penetrations, which have three-hour fire ratings.

(5) The lowest elevation in the CB is divided into separate divisional areas for instrumentation and control equipment. CB flooding resulting from component failures in any of the CB divisions does not prevent safe shutdown of the reactor.

For external flooding, protection features are:

- Exterior access openings sealed in external walls below flood and groundwater levels.
- Wall thickness below flood level designed to withstand hydrostatic loads.
- Water stops in all expansion and construction joints below design basis maximum flood and groundwater levels.
- Waterproofing of external surfaces below design basis maximum flood and groundwater levels;
- Water seals in external walls at pipe and electrical penetrations below design basis maximum flood and groundwater levels; and
- Roofs designed to prevent pooling of large amounts of water in excess of the structural capacity of the roof for design loads.

For internal flooding, protection features are:

- Flood water in one division is prevented from propagating to other division(s) by divisional walls, sills and watertight doors.
- Equipment necessary for safe shutdown is located above the maximum flood level for that location or is qualified for flood conditions.

(6) RTNSS equipment in the CB is located above the maximum flood level for that location or is qualified for flood conditions.

(7) Doors that connect the CB with the EB galleries are watertight for flooding of the galleries up to the ground level elevation.

Inspections, Tests, Analyses, and Acceptance Criteria

Table 2.16.6-2 provides a definition of the inspections, test and analyses, together with associated acceptance criteria for the Control Building.

Table 2.16.6-1

Critical Dimensions of Control Building – Part 1

Label	Wall or Section Description	Column Line or Region	Floor Elevation or Elevation Range (EL: mm)	Concrete Thickness* mm (ft-in)	Tolerance* mm (in)
1	Wall at Column Line C1	From CA to CD	From -7400 to 8560	900 (2'-11 ½")	+15,-10 (+ ½",- ⅜")
2	Wall at Column Line C5	From CA to CD	From -7400 to 8560	900 (2'-11 ½")	+15,-10 (+ ½",- ⅜")
3	Wall at Column Line CA	From C1 to C5	From -7400 to 8560	900 (2'-11 ½")	+15,-10 (+ ½",- ⅜")
4	Wall at Column Line CD	From C1 to C5	From -7400 to 8560	900 (2'-11 ½")	+15,-10 (+ ½",- ⅜")
5	Wall at Column Line C3	From CA to CB	From -7400 to -2500	1000 (3'-3 ⅜")	+25,-20 (+1", ¾")
6	Wall at Column Line C3	From CC to CD	From -7400 to -2500	1000 (3'-3 ⅜")	+25,-20 (+1", ¾")
7	Wall at Column Line C1	From CA to CD	From 9060 to 13100	700 (2'-3 ⅝")	+15,-10 (+ ½",- ⅜")
8	Wall at Column Line C5	From CA to CD	From 9060 to 13100	700 (2'-3 ⅝")	+15,-10 (+ ½",- ⅜")
9	Wall at Column Line CA	From C1 to C5	From 9060 to 13100	700 (2'-3 ⅝")	+15,-10 (+ ½",- ⅜")
10	Wall at Column Line CD	From C1 to C5	From 9060 to 13100	700 (2'-3 ⅝")	+15,-10 (+ ½",- ⅜")
11	Basemat	From C1 to C5 and CA to CD	-7400	3000 (9'-10")	+50,-20 (+2",- ¾")
12	Floor	From C1 to C5 and CA to CD	-2000	500 (1'-7¾")	+15,-10 (+ ½",- ⅜")

Table 2.16.6-1

Critical Dimensions of Control Building – Part 1

Label	Wall or Section Description	Column Line or Region	Floor Elevation or Elevation Range (EL: mm)	Concrete Thickness* mm (ft-in)	Tolerance* mm (in)
13	Floor	From C1 to C5 and CA to CD	4650	500 (1'-7¾")	+15,-10 (+ ½",- ⅜")
14	Floor	From C1 to C5 and CA to CD	9060	500 (1'-7¾")	+15,-10 (+ ½",- ⅜")
15	Roof	From C1 to C5 and CA to CD	13800	700 (2'-3 ⅝")	+15,-10 (+ ½",- ⅜")

* SI units are the controlling units and English units are for reference only.

Table 2.16.6-1

Critical Dimensions of Control Building – Part 2

Key Dimension	Reference Dimension	Nominal Dimension* mm (ft-in)	Tolerance* mm (ft)
Distance from Outside Surface of Wall at Column Line CA to Column Line CB when Measured at Column Line C1	X1 (Figure 2.16.6-1)	10400 (34'-1 ⅜")	±300 (± 1')
Distance from Outside Surface of Wall at Column Line CD to Column Line CB when Measured at Column Line C1	X2 (Figure 2.16.6-1)	13400 (43'-11 ½")	±300 (± 1')
Distance from Outside Surface of Wall at Column Line C1 to Column Line C3 when Measured at Column Line CA	X3 (Figure 2.16.6-1)	15150 (49'-8 ½")	±300 (± 1')
Distance from Outside Surface of Wall at Column Line C5 to Column Line C3 when Measured at Column Line CA	X4 (Figure 2.16.6-1)	15150 (49'-8 ½")	±300 (± 1')
Distance from Top of Basemat to Design Plant Grade	X5 (Figure 2.16.6-5)	12050 (39'-6 ½")	±300 (± 1')
Distance from Design Plant Grade to Top Surface of Roof	X6 (Figure 2.16.6-5)	9150 (30'-0 ¼")	±300 (± 1')

* SI units are the controlling units and English units are for reference only.

Table 2.16.6-2

ITAAC For Control Building

Design Commitment	Inspections, Tests, Analyses	Acceptance Criteria
1. The CB is designed and constructed to accommodate the dynamic, static, and thermal loading conditions associated with the various loads and load combinations, which form the structural design basis. The loads are those associated with: • Natural phenomena—wind, floods, tornadoes (including tornado missiles), earthquakes, rain and snow. • Internal events—floods. • Normal plant operation—live loads, dead loads and temperature effects.	Analyses of the as-built CB loads will be conducted.	The as-built CB conforms to the structural design basis loads specified in the Design Description of this subsection 2.16.6 associated with: • Natural phenomena—wind, floods, tornadoes (including tornado missiles), earthquakes, rain and snow. • Internal events—floods. • Normal plant operation—live loads, dead loads and temperature effects
2. The functional arrangement of the CB is as described in the Design Description of this Subsection 2.16.6 and is as shown in Figures 2.16.6-1 through 2.16.6-5.	Inspections of the as-built CB will be conducted.	The CB conforms to the functional arrangement described in the Design Description of this Subsection 2.16.6 and as shown in Figures 2.16.6-1 through 2.16.6-5.
3. The critical CB dimensions and acceptable tolerance are provided in Table 2.16.6-1.	Inspection of the as-built CB will be performed. Deviations from the design conditions will be analyzed using the design basis loads.	Reconciliation of construction deviations from the critical dimensions and tolerances specified in Table 2.16.6-1 demonstrates that the as-built CB will withstand the design basis loads specified in the Design Description of this Subsection 2.16.6 without loss of structural integrity or the safety-related functions.

Table 2.16.6-2

ITAAC For Control Building

Design Commitment	Inspections, Tests, Analyses	Acceptance Criteria
4. The MCR envelope is separated from the rest of the CB by walls, floors, doors and penetrations, which have three-hour fire ratings.	Inspections of the as-built CB will be conducted.	The as-built CB has a MCR envelope separated from the rest of the CB by walls, floors, doors and penetrations with >3-hour fire rating.

Table 2.16.6-2

ITAAC For Control Building

Design Commitment	Inspections, Tests, Analyses	Acceptance Criteria
5. The lowest elevation in the CB is divided into separate divisional areas for instrumentation and control equipment. CB flooding resulting from component failures in any of the CB divisions does not prevent safe shutdown of the reactor. For external flooding, protection features are: • Exterior access openings sealed in external walls below flood and groundwater levels. • Wall thickness below flood level designed to withstand hydrostatic loads. • Water stops in all expansion and construction joints below design basis maximum flood and groundwater levels. • Waterproofing of external surfaces below design basis maximum flood and groundwater levels;	Inspections of the as-built CB flood control features will be conducted.	The as-built CB contains the following features: For external flooding: • Exterior access openings are sealed in external walls below flood and groundwater levels. • Wall thickness below flood level designed to withstand hydrostatic loads. • Water stops in all expansion and construction joints below design basis maximum flood and groundwater levels. • Waterproofing of external surfaces below design basis maximum flood and groundwater levels; • Water seals in external walls at pipe and electrical penetrations below design basis maximum flood and groundwater levels; and • Roofs designed to prevent pooling of large amounts of water in excess of the structural capacity of the roof for design loads.

Table 2.16.6-2

ITAAC For Control Building

Design Commitment	Inspections, Tests, Analyses	Acceptance Criteria
5. (continued) • Water seals in external walls at pipe and electrical penetrations below design basis maximum flood and groundwater levels; and • Roofs designed to prevent pooling of large amounts of water in excess of the structural capacity of the roof for design loads. For internal flooding, protection features are: • Flood water in one division is prevented from propagating to other division(s) by divisional walls, sills and watertight doors. • Equipment necessary for safe shutdown is located above the maximum flood level for that location or is qualified for flood conditions.		For internal flooding: • Flood water in one division is prevented from propagating to other division(s) by divisional walls, sills and watertight doors. • Equipment necessary for safe shutdown is located above the maximum flood level for that location or is qualified for flood conditions.
6. RTNSS equipment in the CB is located above the maximum flood level for that location or is qualified for flood conditions.	Inspections of the as-built RTNSS equipment in the CB will be conducted.	The as-built RTNSS equipment in the CB is located above the maximum flood level for that location or is qualified for flood conditions.

Table 2.16.6-2

ITAAC For Control Building

Design Commitment	Inspections, Tests, Analyses	Acceptance Criteria
7. Doors that connect the CB with the EB galleries are watertight for flooding of the galleries up to the ground level elevation.	Inspections of the doors for CB to EB galleries will be conducted.	The doors connecting the CB to EB are watertight doors.

Figure 2.16.6-1. CB Concrete Outline Plan at EL –7400

{{{Security-Related Information – Withheld Under 10 CFR 2.390}}}

Figure 2.16.6-2. CB Concrete Outline Plan at EL –2000

{{{Security-Related Information – Withheld Under 10 CFR 2.390}}}

Figure 2.16.6-3. CB Concrete Outline Plan at EL 4650

{{{Security-Related Information – Withheld Under 10 CFR 2.390}}}

Figure 2.16.6-4. CB Concrete Outline Plan at EL 9060

{{{Security-Related Information – Withheld Under 10 CFR 2.390}}}

Figure 2.16.6-5. CB Concrete Outline E-W Section

{{{Security-Related Information – Withheld Under 10 CFR 2.390}}}

2.16.7 Fuel Building

Design Description

The Fuel Building (FB) contains the spent fuel pool, cask loading area, fuel handling systems and storage areas, lower connection to the Fuel Transfer System, overhead crane, and other plant systems and equipment. The FB is a Seismic Category I structure except for the penthouse that houses HVAC equipment. The penthouse is a Seismic Category II structure. The FB is a rectangular reinforced concrete box type shear wall structure consisting of walls and slabs and is supported on a foundation mat. The FB is integrated with the RB, sharing a common wall between the RB and FB as well as a large common foundation mat. The building is partially below grade.

There is no safety-related component in the FB that could be affected by internal flooding in this structure. Flooding in the FB could not affect the RB because the connection points in the lower elevation are watertight. To protect the FB against external flooding, penetrations in the external walls below flood level are provided with watertight seals.

The key characteristics of the FB are as follows:

(1) The FB is designed and constructed to accommodate the dynamic, static, and thermal loading conditions associated with the various loads and load combinations, which form the structural design basis. The loads are those associated with:

- Natural phenomena—wind, floods, tornadoes (including tornado missiles), earthquakes, rain and snow;
- Internal events—floods;
- Normal plant operation—live loads, dead loads and temperature effects; and
- Loads from spent fuel storage racks.

(2) The functional arrangement of the FB is as described in the Design Description of this Subsection 2.16.7 and is as shown in Figures 2.16.7-1 through 2.16.7-6.

(3) The critical dimensions and acceptable tolerances for the FB are as described in Table 2.16.7-1.

(4) The walls forming the boundaries of the FB and penetrations through these walls have three-hour fire ratings.

(5) The FB external flooding protection features are:

- Exterior access openings are sealed in external walls below flood and groundwater levels;
- Wall thickness below flood level designed to withstand hydrostatic loads;
- Water seals at pipe and electrical penetrations are installed in external walls below flood and groundwater levels;
- Water stops in all expansion and construction joints below design basis maximum flood and groundwater levels; and

- Roofs designed to prevent pooling of large amounts of water in excess of the structural capacity of the roof for design loads.

(6) Internal flooding analysis of the FB is performed using ANSI/ANS 56.11-1988 guidelines to ensure protection of RTNSS equipment.

(7) RTNSS equipment in the FB is located above the maximum flood level for that location or is qualified for flood conditions.

(8) The spent fuel pool is a reinforced concrete structure with a stainless steel liner that is equipped with embedments designed to Seismic Category I requirements.

(9) The gates that connect the SFP to adjacent pools are designed so that the bottom of the gate is at least 3.05 m (10.0 ft) above TAF.

Inspections, Tests, Analyses, and Acceptance Criteria

Table 2.16.7-2 provides a definition of the inspections, test and analyses, together with associated acceptance criteria for the Fuel Building.

Table 2.16.7-1

Critical Dimensions of Fuel Building – Part 1

Label	Wall or Section Description	Column Line or Region	Floor Elevation or Elevation Range (EL: mm)	Concrete Thickness* mm (ft-in)	Tolerance* mm (in)
1	Wall at Column Line F3	From FA to between FB and FC	From -10000 to 3350	3640 (11'-11¼")	+25,-20 (+1",- ¾")
2	Wall at Column Line F3	From between FB and FC to FF	From -11500 to 3350	2000 (6'-6 ¾")	+25,-20 (+1",- ¾")
3	Wall at Column Line FA	From F1 to F3	From -10000 to 3350	2000 (6'-6 ¾")	+25,-20 (+1",- ¾")
4	Wall at Column Line FF	From F1 to F3	From -11500 to 3350	2000 (6'-6 ¾")	+25,-20 (+1",- ¾")
5	Wall between Column Lines F1 and F2	From FA to FB	From -10000 to 4650	4500 (14'- ⅛")	+25,-20 (+1",- ¾")
6	Wall between Column Lines F1 and F2	From FB to between FB and FC	From -10000 to 4650	1935 (6'-4 ⅛")	+25,-20 (+1",- ¾")
7	Wall between Column Lines F1 and F2	From between FB and FC to FC	From -10000 to -6400	2000 (6'-6 ¾")	+25,-20 (+1",- ¾")
8	Wall between Column Lines F1 and F2 (Wall between Cask Pit and Incline Fuel Transfer Tube Pit)	From between FB and FC to FC	From -10000 to 4650	1000 (3'-3 ⅜")	+25,-20 (+1",- ¾")
9	Wall between Column Lines F1 and F2	From FE to FF	From -11500 to -7200	1000 (3'-3 ⅜")	+25,-20 (+1",- ¾")
10	Wall at Column Line F2	From between FE and FF to FF	From -11500 to -7200	1000 (3'-3 ⅜")	+25,-20 (+1",- ¾")
11	Wall between Column Lines F2 and F3	From between FB and FC to FC	From -10000 to -1300	1150 (3'-9 ¼")	+25,-20 (+1",- ¾")
12	Wall between Column Lines F2 and F3	From FE to FF	From -11500 to -7200	1000 (3'-3 ⅜")	+25,-20 (+1",- ¾")

Table 2.16.7-1

Critical Dimensions of Fuel Building – Part 1

Label	Wall or Section Description	Column Line or Region	Floor Elevation or Elevation Range (EL: mm)	Concrete Thickness* mm (ft-in)	Tolerance* mm (in)
13	Wall between Column Lines FB and FC	From between F1 and F2 to F3	From -10000 to 4650	1500 (4'-11")	+25,-20 (+1",- ¾")
14	Wall at Column Line FC	From F1 to between F1 and F2	From -11500 to 4650	1500 (4'-11")	+25,-20 (+1",- ¾")
15	Wall at Column Line FC	From between F1 and F2 to F3	From -11500 to 3350	1000 (3'-3 ⅜")	+25,-20 (+1",- ¾")
16	Wall at Column Line FE	From between F1 and F2 to F2 and F3	From -11500 to -7200	1000 (3'-3 ⅜")	+25,-20 (+1",- ¾")
17	Wall at Column Line FE	From between F2 and F3 to F3	From -11500 to -7200	600 (1'-11 ⅝")	+15,-10 (+ ½",- ⅜")
18	Wall between Column Lines FB and FC	From F1 to F1 and F2	From -6400 to 4650	2000 (6'-6 ¾")	+25,-20 (+1",- ¾")
19	Wall between Column Lines F2 and F3	From between FB and FC to FC	From -1300 to 3350	1000 (3'-3 ⅜")	+25,-20 (+1",- ¾")
20	Wall at Column Line F3	From FA to FF	From 4650 to 21800	1000 (3'-3 ⅜")	+25,-20 (+1",- ¾")
21	Wall at Column Line FA	From F1 to F3	From 4650 to 21800	1000 (3'-3 ⅜")	+25,-20 (+1",- ¾")
22	Wall at Column Line FF	From F1 to F3	From 4650 to 21800	1000 (3'-3 ⅜")	+25,-20 (+1",- ¾")
23	Basemat of Spent Fuel Pool, Cask Pit, and Incline Fuel Transfer Tube Pit	Not Applicable	-10000	5500 (18"-0 ½")	+50,-20 (+2", ¾")
24	Basemat excluding Spent Fuel Pool, Cask Pit, and Incline Fuel Transfer Tube Pit	Not Applicable	-11500	4000 (13'-1 ½")	+50,-20 (+2", ¾")

Table 2.16.7-1

Critical Dimensions of Fuel Building – Part 1

Label	Wall or Section Description	Column Line or Region	Floor Elevation or Elevation Range (EL: mm)	Concrete Thickness* mm (ft-in)	Tolerance* mm (in)
25	Floor	From F1 to F3 and FC to FF	-6400	800 (2'-7 ½")	+15,-10 (+ ½",- ⅜")
26	Floor	From F1 to F3 and FC to FF	-1000	800 (2'-7 ½")	+15,-10 (+ ½",- ⅜")
27	Floor (Cask Pit)	Not Applicable	-1300	1175 (3'-10")	+25,-20 (+1",- ¾")
28	Floor	From F1 to F3 and FC to FF	4650	1300 (4'-3 ⅛")	+25,-20 (+1",- ¾")
29	Roof	From F1 to F3 and FA to FF	22500	700 (2'- 3 ⅝")	+15,-10 (+ ½",- ⅜")

* SI units are the controlling units and English units are for reference only.

Table 2.16.7-1

Critical Dimensions of Fuel Building – Part 2

Key Dimension	Reference Dimension	Nominal Dimension* mm (ft-in)	Tolerance* mm (in)
Distance from Outside Surface of Wall at Column Line FA to Column Line FC when Measured at Column Line F1	X1 (Figure 2.16.7-1)	21700 (71'-2⅜")	+300,-200 (+12",-7⅞")
Distance from Outside Surface of Wall at Column Line FF to Column Line FC when Measured at Column Line F1	X2 (Figure 2.16.7-1)	27300 (89'-6¾")	±300 (±12")
Distance between Outside Surface of Walls at Column Lines R7 and F3 when Measured at Column Line FA	X3 (Figure 2.16.7-1)	21000 (68'-10¾")	+300,-200 (+12",-7⅞")
Distance from Top of Basemat to Design Plant Grade (Basemat excluding Spent Fuel Pool, Cask Pit, and Incline Fuel Transfer Tube Pit)	X4 (Figure 2.16.7-6)	16150 (52'-11⅞")	±300 (±12")
Deleted			
Distance from Design Plant Grade to Top Surface of Roof (Excluding Seismic Category-II Portion)	X5(Figure 2.16.7-6)	17850 (58'-6¾")	±300 (±12")

* SI units are the controlling units and English units are for reference only.

Table 2.16.7-2

ITAAC For The Fuel Building

Design Commitment	Inspections, Tests, Analyses	Acceptance Criteria
1. The FB is designed and constructed to accommodate the dynamic, static, and thermal loading conditions associated with the various loads and load combinations, which form the structural design basis. The loads are those associated with: • Natural phenomena—wind, floods, tornadoes (including tornado missiles), earthquakes, rain and snow; • Internal events—floods; • Normal plant operation—live loads, dead loads and temperature effects; and • Loads from spent fuel storage racks.	Analyses of the as-built FB will be conducted.	The as-built FB conforms to the structural design basis loads specified in the Design Description of this subsection 2.16.7 associated with: • Natural phenomena—wind, floods, tornadoes (including tornado missiles), earthquakes, rain and snow; • Internal events—floods; and • Normal plant operation—live loads, dead loads and temperature effects; and • Loads from spent fuel storage racks.
2. The functional arrangement of the FB is as described in the Design Description of this Subsection 2.16.7 and is as shown in Figures 2.16.7-1 through 2.16.7-6.	Inspections of the as-built FB will be conducted.	The FB conforms to the functional arrangement described in the Design Description of this Subsection 2.16.7 and as shown in Figures 2.16.7-1 through 2.16.7-6.

Table 2.16.7-2

ITAAC For The Fuel Building

Design Commitment	Inspections, Tests, Analyses	Acceptance Criteria
3. The critical dimensions and acceptable tolerances for the FB are as described in Table 2.16.7-1.	Inspection of the FB will be performed. Deviations from the design conditions will be analyzed using the design basis loads.	Reconciliation of construction deviations from the critical dimensions and tolerances specified in Table 2.16.7-1 will demonstrate that the as-built FB will withstand the design basis loads specified in the Design Description of this Subsection 2.16.7 without loss of structural integrity or the safety-related functions.
4. The walls forming the boundaries of the FB and penetrations through these walls have three-hour fire ratings.	Inspections of the as-built FB walls and penetrations will be conducted.	The as-built walls forming the boundaries of the FB and penetrations through these walls have ≥ 3-hour fire ratings.

Table 2.16.7-2

ITAAC For The Fuel Building

Design Commitment	Inspections, Tests, Analyses	Acceptance Criteria
5. The FB is protected against an external flooding. Protection features are: • Exterior access openings are sealed in external walls below flood and groundwater levels; • Wall thickness below flood level designed to withstand hydrostatic loads; • Water seals at pipe and electrical penetrations are installed in external walls below flood and groundwater levels. • Water stops in all expansion and construction joints below design basis maximum flood and groundwater levels; and • Roofs designed to prevent pooling of large amounts of water in excess of the structural capacity of the roof for design loads.	Inspection of the as-built FB flood control features will be conducted.	The following as-built FB flood protection features exist: Protection features are: • Exterior access openings are sealed in external walls below flood and groundwater levels. • Wall thickness below flood level designed to withstand hydrostatic loads; • Water seals at pipe and electrical penetrations are installed in external walls below flood and groundwater levels. • Water stops in all expansion and construction joints below design basis maximum flood and groundwater levels; and • Roofs designed to prevent pooling of large amounts of water in excess of the structural capacity of the roof for design loads.
6. Internal flooding analysis of the FB is performed using ANSI/ANS 56.11-1988 guidelines to ensure protection of RTNSS equipment.	Internal flooding analysis of the FB will be performed.	Internal flooding analysis of the FB has been performed using ANSI/ANS 56.11-1988 guidelines to ensure protection of RTNSS equipment.

Table 2.16.7-2

ITAAC For The Fuel Building

Design Commitment	Inspections, Tests, Analyses	Acceptance Criteria
7. RTNSS equipment in the FB is located above the maximum flood level for that location or is qualified for flood conditions.	Inspection of the as-built RTNSS equipment in the FB will be conducted.	The as-built RTNSS equipment in the FB is located above the maximum flood level for that location or is qualified for flood condition.
8. The spent fuel pool is a reinforced concrete structure with a stainless steel liner that is equipped with embedments designed to Seismic Category I requirements.	Inspection or analysis of the as-built spent fuel pool will be performed.	The as-built spent fuel pool is a reinforced concrete structure with a stainless steel liner that is equipped with embedments and can withstand seismic dynamic loads without loss of structural integrity.
9. The gates that connect the SFP to adjacent pools are designed so that the bottom of the gate is at least 3.05 m (10.0 ft) above TAF.	Inspection of the as-built spent fuel pool will be performed.	The gates that connect the SFP to adjacent pools are built so that the bottom of the gate is at least 3.05 m (10.0 ft) above TAF.

Figure 2.16.7-1. FB Concrete Outline Plan at EL –11500

{{{Security-Related Information – Withheld Under 10 CFR 2.390}}}

Figure 2.16.7-2. FB Concrete Outline Plan at EL –6400

{{{Security-Related Information – Withheld Under 10 CFR 2.390}}}

Figure 2.16.7-3. FB Concrete Outline Plan at EL –1000

{{{Security-Related Information – Withheld Under 10 CFR 2.390}}}

Figure 2.16.7-4. FB Concrete Outline Plan at EL 4650

{{{Security-Related Information – Withheld Under 10 CFR 2.390}}}

Figure 2.16.7-5. FB Concrete Outline Plan at EL 22500

{{{Security-Related Information – Withheld Under 10 CFR 2.390}}}

Figure 2.16.7-6. FB Concrete Outline N-S Section

{{{Security-Related Information – Withheld Under 10 CFR 2.390}}}

2.16.8 Turbine Building

Design Description

The Turbine Building (TB) encloses the turbine generator, main condenser, condensate and feedwater systems, condensate purification system, offgas system, turbine-generator support systems and bridge crane. The TB is designed as a Seismic Category II structure.

The key characteristics of the TB are as follows:

(1) The TB analysis and design is the same as a Seismic Category I structure, including the load combinations and the acceptance criteria, for loads associated with:

- Natural phenomenon –wind, floods, tornadoes (excluding tornado missiles), earthquakes, rain and snow. In addition, the TB is designed for hurricane wind to protect RTNSS systems.
- Normal plant operation – live loads and dead loads.

(2) The RTNSS systems in the TB are surrounded by barriers to protect them from hurricane wind and missiles.

(3) The internal flooding analysis of the TB is performed using ANSI/ANS 56.11-1988 guidelines to ensure protection of RTNSS equipment.

(4) RTNSS equipment in the TB is located above the maximum flood level for that location or is qualified for flood conditions.

(5) The TB external flooding features are:

- Water seals at pipe penetrations are installed in external walls below flood and groundwater levels.
- Water stops are provided in expansion and construction joints below flood and groundwater levels.

(6) The TB is constructed in accordance with the design documents, with any deviations from the design documents reconciled to demonstrate the as-built TB structural integrity.

Inspections, Tests, Analyses, and Acceptance Criteria

Table 2.16.8-1 provides a definition of the inspections, tests and analyses, together with associated acceptance criteria for the TB.

Table 2.16.8-1

ITAAC For The Turbine Building

Design Commitment	Inspection, Tests, Analyses	Acceptance Criteria
1. The TB analysis and design is the same as a Seismic Category I structure, including the load combinations and the acceptance criteria, for loads associated with: • Natural phenomenon –wind, floods, tornadoes (excluding tornado missiles), earthquakes, rain and snow. In addition, the TB is designed for hurricane wind to protect RTNSS systems. • Normal plant operation—live loads and dead loads.	Analyses of the TB will be conducted.	The TB analysis and design is the same as a Seismic Category I structure including the load combinations and the acceptance criteria, for loads associated with: • Natural phenomena – wind, floods, tornadoes (excluding tornado missiles), earthquakes, rain, snow and hurricane wind (for RTNSS protection). • Normal plant operations – live loads and dead loads.
2. The RTNSS systems in the TB are surrounded by barriers to protect them from hurricane wind and missiles.	Inspection of the as-built RTNSS systems in the TB will be conducted.	The as-built RTNSS systems in the TB are surrounded by barriers to protect them from hurricane wind and missiles.
3. The internal flooding analysis of the TB is performed using ANSI/ANS 56.11-1988 guidelines to ensure protection of RTNSS equipment.	Internal flooding analysis of the TB will be performed.	Internal flooding analysis of the TB has been performed using ANSI/ANS 56.11-1988 guidelines to ensure protection of RTNSS equipment.
4. RTNSS equipment in the TB is located above the maximum flood level for that location or is qualified for flood condition.	Inspection of the as-built RTNSS equipment in the TB will be conducted.	The as-built RTNSS equipment in the TB is located above the maximum flood level for that location or is qualified for flood condition.

Table 2.16.8-1

ITAAC For The Turbine Building

Design Commitment	Inspection, Tests, Analyses	Acceptance Criteria
5. The TB is protected against external flooding. The following protection features are: • Water seals at pipe penetrations are installed in external walls below flood and groundwater levels. • Water stops are provided in expansion and construction joints below flood and groundwater levels.	Inspection of the as-built TB flood control features will be conducted	The following as-built TB flood protection features exist: • Water seals at pipe penetrations are installed in external walls below flood and groundwater levels. • Water stops are provided in expansion and construction joints below flood and groundwater levels.
6. The TB is constructed in accordance with the design documents, with any deviations from the design documents reconciled to demonstrate the as-built TB structural integrity.	Inspection and reconciliation analyses of the as-built TB will be performed.	The as-built TB is constructed in accordance with the design documents, with any deviations reconciled appropriately to demonstrate structural integrity.

2.16.9 Radwaste Building

Design Description

The Radwaste Building (RW) is a box-shaped reinforced concrete structure housing tanks and equipment including processing systems for radioactive liquid and solid waste processing. The RW is designed in accordance with RG 1.143 Classification RW-IIa with additional requirements for: Tornado Wind Speed, Radius, Pressure drop, and Rate of Pressure Drop. The RW structure is designed for full Safe Shutdown Earthquake (SSE) instead of ½ SSE.

The key characteristics of the RW are as follows:

(1) The RW method of analysis is the same as a Seismic Category I structure, including the load combinations and the acceptance criteria. The RW is designed in accordance with RG 1.143 Classification RW-IIa. The earthquake loading is the full SSE instead of ½ SSE as shown in RG 1.143. The RW loads are those associated with:

- Natural phenomenon – wind, floods, tornadoes, tornado missiles, earthquakes, rain and snow.
- Internal events - floods
- Normal plant operation – live loads and dead loads.

(2) The RW external flooding features are:

- Water seals at pipe penetrations installed in external walls below flood and groundwater levels.
- Water stops are provided in expansion and construction joints below flood and groundwater levels.

(3) The RW is constructed in accordance with the design documents, with any deviations from the design documents reconciled to demonstrate the as-built RW structural integrity.

Inspections, Tests, Analyses, and Acceptance Criteria

Table 2.16.9-1 provides a definition of the inspections, test and analyses, together with associated acceptance criteria for the RW.

Table 2.16.9-1

ITAAC For The Radwaste Building

Design Commitment	Inspections, Tests, Analyses	Acceptance Criteria
1. The RW method of analysis is the same as a Seismic Category I structure, including the load combinations and the acceptance criteria. The RW is designed in accordance with RG 1.143 Classification RW-IIa. The earthquake loading is the full SSE instead of ½ SSE as shown in RG 1.143. The RW loads are those associated with: • Natural phenomena—wind, floods, tornadoes, tornado missiles, earthquakes, rain and snow. • Internal events - floods • Normal plant operation—live loads and dead loads.	Analyses of the RW will be conducted.	The RW method of analysis is the same as a Seismic Category I structure, including the load combinations and the acceptance criteria. The RW is designed in accordance with RG 1.143 Classification RW-IIa. The earthquake loading is the full SSE instead of ½ SSE as shown in RG 1.143. The RW loads are those associated with: • Natural phenomena – wind, floods, tornadoes, tornado missiles, earthquakes, rain and snow. • Internal events – floods. • Normal plant operation – live loads and dead loads.
2. The RW is protected against external flooding. The following protection features are: • Water seals at pipe penetrations are installed in external walls below flood and groundwater levels. • Water stops are provided in expansion and construction joints below flood and groundwater levels.	Inspection of the as-built RW flood control features will be conducted.	The following as-built RW flood protection features exist: • Water seals at pipe penetrations are installed in external walls below flood and groundwater levels. • Water stops are provided in expansion and construction joints below flood and groundwater levels.

Table 2.16.9-1

ITAAC For The Radwaste Building

Design Commitment	Inspections, Tests, Analyses	Acceptance Criteria
3. The RW is constructed in accordance with the design documents, with any deviations from the design documents reconciled to demonstrate the as-built RW structural integrity.	Inspection and reconciliation analyses of the as-built RW will be performed.	The as-built RW is constructed in accordance with the design documents, with any deviations reconciled appropriately to demonstrate structural integrity.

2.16.10 Service Building

Design Description

The Service Building (SB) houses the equipment and control facilities associated with personnel entry into the power block, health physics operations offices, and the operations support center. The SB is designed as a Seismic Category II structure.

The key characteristics of the SB are as follows:

(1) The SB analysis and design is the same as a Seismic Category I structure, including the load combinations and the acceptance criteria, for loads associated with:

- Natural phenomenon – wind, floods, tornadoes (excluding tornado missiles), earthquakes, rain and snow.
- Normal plant operation – live loads and dead loads.

(2) The SB is protected against external flooding. The following protection features are:

- Water seals at pipe penetrations are installed in external walls below flood and groundwater levels.
- Water stops are provided in expansion and construction joints below flood and groundwater levels.

(3) The SB is constructed in accordance with the design documents, with any deviations from the design documents reconciled to demonstrate the as-built SB structural integrity.

Inspections, Tests, Analyses, and Acceptance Criteria

Table 2.16.10-1 provides a definition of the inspections, tests and analyses, together with associated acceptance criteria for the SB.

Table 2.16.10-1

ITAAC For The Service Building

Design Commitment	Inspections, Tests, Analyses	Acceptance Criteria
1. The Service Building (SB) analysis and design is the same as a Seismic Category I structure, including the load combinations and the acceptance criteria, for loads associated with: • Natural phenomena—wind, floods, tornadoes (excluding tornado missiles), earthquakes, rain and snow. • Normal plant operation—live loads and dead loads.	Analyses of the SB will be conducted.	The SB analysis and design is the same as a Seismic Category I structure, including the load combinations and the acceptance criteria, for loads associated with: • Natural phenomena – wind, floods, tornadoes (excluding tornado missiles), earthquakes, rain and snow. • Normal plant operation – live loads and dead loads.
2. The SB is protected against external flooding. The following protection features are: • Water seals at pipe penetrations are installed in external walls below flood and groundwater levels. • Water stops are provided in expansion and construction joints below flood and groundwater levels.	Inspection of the as-built SB flood control features will be conducted	The following as-built SB flood protection features exist: • Water seals at pipe penetrations are installed in external walls below flood and groundwater levels. • Water stops are provided in expansion and construction joints below flood and groundwater levels.

Table 2.16.10-1

ITAAC For The Service Building

Design Commitment	Inspections, Tests, Analyses	Acceptance Criteria
3. The SB is constructed in accordance with the design documents, with any deviations from the design documents reconciled to demonstrate the as-built SB structural integrity.	Inspection and reconciliation analyses of the as-built SB will be performed.	The as-built SB is constructed in accordance with the design documents, with any deviations reconciled appropriately to demonstrate structural integrity.

2.16.11 Ancillary Diesel Building

Design Description

The Ancillary Diesel Building (ADB) houses the Ancillary Diesel Generators and their associated supporting systems and equipment. The ADB is designed as a Seismic Category II structure.

The key characteristics of the ADB are as follows:

(1) The ADB analysis and design is the same as a Seismic Category I structure, including the load combinations and the acceptance criteria, for loads associated with:

- Natural phenomenon –wind, floods, tornadoes (excluding tornado missiles), earthquakes, rain and snow. In addition, the ADB is designed for hurricane wind to protect RTNSS systems.
- Normal plant operation – live loads and dead loads.

(2) The RTNSS systems in the ADB are surrounded by barriers to protect them from hurricane wind and missiles.

(3) Internal flooding analysis of the ADB is performed using ANSI/ANS 56.11-1988 guidelines to ensure protection of RTNSS equipment.

(4) RTNSS equipment in the ADB is located above the maximum flood level for that location or is qualified for flood conditions.

(5) The ADB is protected against external flooding. The following protection features are:

- Water seals at pipe penetrations are installed in external walls below flood and groundwater levels
- Water stops are provided in expansion and construction joints below flood and groundwater levels.

(6) The ADB is constructed in accordance with the design documents, with any deviations from the design documents reconciled to demonstrate the as-built ADB structural integrity.

Inspections, Tests, Analyses, and Acceptance Criteria

Table 2.16.11-1 provides a definition of the inspections, tests and analyses, together with associated acceptance criteria for the ADB.

Table 2.16.11-1

ITAAC For The Ancillary Diesel Building

Design Commitment	Inspection, Tests, Analyses	Acceptance Criteria
1. The Ancillary Diesel Building (ADB) analysis and design is the same as a Seismic Category I structure, including the load combinations and the acceptance criteria, for loads associated with: • Natural phenomena—wind, floods, tornadoes (excluding tornado missiles), earthquakes, rain and snow. In addition, the ADB is designed for hurricane wind to protect RTNSS systems. • Normal plant operation—live loads and dead loads.	Analyses of the ADB will be conducted.	The ADB analysis and design is the same as a Seismic Category I structure, including the load combinations and the acceptance criteria, for loads associated with: • Natural phenomena – wind, floods, tornadoes (excluding tornado missiles), earthquakes, rain, snow and hurricane wind (for RTNSS protection). • Normal plant operation – live loads and dead loads.
2. The RTNSS systems in the ADB are surrounded by barriers to protect them from hurricane wind and missiles.	Inspection of the as-built RTNSS systems in the ADB will be conducted.	The as-built RTNSS systems in the ADB are surrounded by barriers to protect them from hurricane wind and missiles
3. Internal flooding analysis of the ADB is performed using ANSI/ANS 56.11-1988 guidelines to ensure protection of RTNSS equipment.	Internal flooding analysis of the ADB will be performed.	The internal flooding analysis of the ADB has been performed using ANSI/ANS 56.11-1988 guidelines to ensure protection of RTNSS equipment.
4. RTNSS equipment in the ADB is located above the maximum flood level for that location or is qualified for flood condition.	Inspection of the as-built RTNSS equipment in the ADB will be conducted.	The as-built RTNSS equipment in the ADB is located above the maximum flood level for that location or is qualified for flood condition.

Table 2.16.11-1

ITAAC For The Ancillary Diesel Building

Design Commitment	Inspection, Tests, Analyses	Acceptance Criteria
5. The ADB is protected against external flooding. The following protection features are: • Water seals at pipe penetrations are installed in external walls below flood and groundwater levels. • Water stops are provided in expansion and construction joints below flood and groundwater levels.	Inspection of the as-built ADB flood control features will be conducted	The following as-built ADB flood protection features exist: • Water seals at pipe penetrations are installed in external walls below flood and groundwater levels. • Water stops are provided in expansion and construction joints below flood and groundwater levels.
6. The ADB is constructed in accordance with the design documents, with any deviations from the design documents reconciled to demonstrate the as-built ADB structural integrity.	Inspection and reconciliation analyses of the as-built ADB will be performed.	The as-built ADB is constructed in accordance with the design documents, with any deviations reconciled appropriately to demonstrate structural integrity.

2.16.12 Fire Water Service Complex

Design Description

The Firewater Service Complex (FWSC) consists of two Firewater Storage Tanks (FWS) and a Fire Pump Enclosure (FPE) that share a common basemat. Each FWS is designed with a cylindrical reinforced concrete wall and a dome-shaped reinforced concrete roof. The FWSC is a Seismic Category I structure, non-safety related.

The key characteristics of the FWSC are as follows:

(1) The FWSC is designed to accommodate the dynamic and static loading conditions associated with the various loads and load combinations that form the structural design basis. The loads are those associated with:

- Natural phenomenon – wind, floods, tornadoes, tornado missiles, earthquakes, rain and snow.
- Normal plant operation – live loads and dead load.

(2) Internal flooding analysis of the FWSC is performed using ANSI/ANS 56.11-1988 guidelines to ensure protection of RTNSS equipment.

(3) RTNSS equipment in the FWSC is located above the maximum flood level for that location or is qualified for flood conditions.

(4) The FWSC is protected against external flooding. The following protection features are:

- Exterior access openings sealed in external walls below flood and groundwater levels.
- Wall thicknesses below flood level designed to withstand hydrostatic loads.
- Water seals in external walls at pipe and electrical penetrations below flood and groundwater levels
- Water stops in all expansion and construction joints below design basis maximum flood and groundwater levels.
- Roofs designed to prevent pooling of large amounts of water in excess of the structural capacity of the roof for design loads.

(5) The FWSC is constructed in accordance with the design documents with any deviation from the design documents reconciled to demonstrate the as-built FWSC structural integrity.

Inspections, Tests, Analyses, and Acceptance Criteria

Table 2.16.12-1 provides a definition of the inspections, tests and analyses, together with associated acceptance criteria for the FWSC.

Table 2.16.12-1

ITAAC For The Firewater Service Complex

Design Commitment	Inspection, Tests, Analyses	Acceptance Criteria
1. The Firewater Service Complex (FWSC) is designed to accommodate the dynamic and static loading conditions associated with the various loads and load combinations that form the structural design basis. The loads are those associated with: • Natural phenomena—wind, floods, tornadoes, tornado missiles, earthquakes, rain and snow. • Normal plant operation—live loads and dead loads.	Analyses of the FWSC will be conducted	The FWSC design conforms to the structural design basis loads specified in the Design Description of Subsection 2.16.12 associated with: • Natural phenomena - wind, floods, tornadoes, tornado missiles, earthquakes, rain and snow. • Normal plant operation—live loads and dead loads.
2. Internal flooding analysis of the FWSC is performed using ANSI/ANS 56.11-1988 guidelines to ensure protection of RTNSS equipment.	Internal flooding analysis of the FWSC will be performed.	Internal flooding analysis of the FWSC has been performed using ANSI/ANS 56.11-1988 guidelines to ensure protection of RTNSS equipment.
3. RTNSS equipment in the FWSC is located above the maximum flood level for that location or is qualified for flood conditions	Inspection of the as-built RTNSS equipment in the FWSC will be conducted.	The as-built RTNSS equipment in the FWSC is located above the maximum flood level for that location or is qualified for flood condition.

Table 2.16.12-1

ITAAC For The Firewater Service Complex

Design Commitment	Inspection, Tests, Analyses	Acceptance Criteria
4. The FWSC is protected against external flooding. The following protection features are: • Exterior access openings sealed in external walls below flood and groundwater levels. • Wall thicknesses below flood level designed to withstand hydrostatic loads. • Water seals in external walls at pipe and electrical penetrations below flood and groundwater levels. • Water stops in all expansion and construction joints below design basis maximum flood and groundwater levels. • Roofs designed to prevent pooling of large amounts of water in excess of the structural capacity of the roof for design loads.	Inspection of the as-built FWSC flood control features will be conducted.	The following as-built FWSC flood protection features exist: • Exterior access openings sealed in external walls below flood and groundwater levels. • Wall thicknesses below flood level designed to withstand hydrostatic loads. • Water seals in external walls at pipe and electrical penetrations below flood and groundwater levels. • Water stops are provided in all expansion and construction joints below design basis maximum flood and groundwater levels. • Roofs designed to prevent pooling of large amounts of water in excess of the structural capacity of the roof for design loads.
5. The FWSC is constructed in accordance with the design documents with any deviations from the design documents reconciled to demonstrate the as-built FWSC structural integrity.	Inspection and reconciliation analyses of the as-built FWSC will be performed.	The as-built FWSC is constructed in accordance with the design documents with any deviations reconciled appropriately to demonstrate structural integrity.

2.16.13 Electrical Building

Design Description

The Electrical Building (EB) houses the two non-safety-related standby diesel, associated supporting systems and equipment, and non-safety-related power supplies. The EB also provides space for the Technical Support Center. The EB is seismic category NS.

The key characteristics of the EB are as follows:

(1) The EB is designed and constructed to accommodate the dynamic and static loading conditions associated with the various loads and load combinations that form the structural design basis. The loads are those associated with:

- Natural phenomenon – hurricane wind, floods, earthquakes, rain and snow.
- Normal plant operation – live loads, dead load.

(2) The RTNSS systems in the EB are surrounded by barriers to protect them from hurricane wind and missiles.

(3) Internal flooding analysis of the EB is performed using ANSI/ANS 56.11-1988 guidelines to ensure protection of RTNSS equipment.

(4) RTNSS equipment in the EB is located above the maximum flood level for that location or is qualified for flood condition.

(5) The EB is protected against external flooding. The following protection features are:

- Water seals at pipe and electrical penetrations are installed in external walls below flood and groundwater levels.
- Water stops are provided in expansion and construction joints below flood and groundwater levels.

(6) The EB is constructed in accordance with the design documents, with any deviation from the design documents reconciled to demonstrate the as-built EB structural integrity.

Inspections, Tests, Analyses, and Acceptance Criteria

Table 2.16.13-1 provides a definition of the inspections, tests and analyses, together with associated acceptance criteria for the EB.

Table 2.16.13-1

ITAAC For The Electrical Building

Design Commitment	Inspection, Tests, Analyses	Acceptance Criteria
1. The Electrical Building (EB) is designed to accommodate the dynamic and static loading conditions associated with the various loads and load combinations that form the structural design basis. The loads are those associated with: • Natural phenomena - hurricane wind, floods, earthquakes, rain and snow. • Normal plant operation - live loads and dead loads.	Analyses of the EB will be conducted	The EB design conforms to the structural design basis loads specified in the Design Description of Subsection 2.16.13 associated with: • Natural phenomena - hurricane wind, floods, earthquakes, rain and snow. • Normal plant operation - live loads and dead loads.
2. The RTNSS systems in the EB are surrounded by barriers to protect them from hurricane wind and missiles.	Inspection of the as-built RTNSS equipment in the EB will be conducted.	The as-built RTNSS systems in the EB are surrounded by barriers to protect them from hurricane wind and missiles.
3. Internal flooding analysis of the EB is performed using ANSI/ANS 56.11-1988 guidelines to ensure protection of RTNSS equipment.	Internal flooding analysis of the EB will be performed.	Internal flooding analysis of the EB has been performed using ANSI/ANS 56.11-1988 guidelines to ensure protection of RTNSS equipment.
4. RTNSS equipment in the EB is located above the maximum flood level for that location or is qualified for flood condition.	Inspection of the as-built RTNSS equipment in the EB will be conducted.	The as-built RTNSS equipment in the EB is located above the maximum flood level for that location or is qualified for flood condition.

Table 2.16.13-1

ITAAC For The Electrical Building

Design Commitment	Inspection, Tests, Analyses	Acceptance Criteria
5. The EB is protected against external flooding. The following protection features are: • Water seals at pipe and electrical penetrations are installed in external walls below flood and groundwater levels. • Water stops are provided in expansion and construction joints below flood and groundwater levels.	Inspection of the as-built EB flood control features will be conducted	The following as-built EB flood protection features exist: • Water seals at pipe and electrical penetrations are installed in external walls below flood and groundwater levels. • Water stops are provided in expansion and construction joints below flood and groundwater levels.
6. The EB is constructed in accordance with the design documents with any deviations from the design documents reconciled to demonstrate the as-built EB structural integrity.	Inspection and reconciliation analyses of the as-built EB will be performed.	The as-built EB is constructed in accordance with the design documents, with any deviations reconciled appropriately to demonstrate structural integrity.

2.16.14 Service Water Building

Design Description

The Service Water Building (SF) houses the non-safety-related vertical pumps and associated valves, strainers, piping and electrical buses. The SF is seismic category NS.

The key characteristics of the SF are as follows:

(1) The SF is designed and constructed to accommodate the dynamic and static loading conditions associated with the various loads and load combinations that form the structural design basis. The loads are those associated with:

- Natural phenomenon – hurricane wind, floods, earthquakes, rain and snow.
- Normal plant operation – live loads, dead load.

(2) The RTNSS systems in the SF are surrounded by barriers to protect them from hurricane wind and missiles.

(3) Internal flooding analysis of the SF is performed using ANSI/ANS 56.11-1988 guidelines to ensure protection of RTNSS equipment.

(4) RTNSS equipment in the SF is located above the maximum flood level for that location or is qualified for flood condition.

(5) Plant Service Water equipment or other equipment designated as RTNSS that is located outdoors is qualified for flood condition and protected from hurricane wind and missiles when buried underground. RTNSS equipment that is not buried directly underground is protected by cell enclosures that provide flooding, wind and missile protection.

(6) The SF is protected against external flooding. The following protection features are:

- Water seals at pipe and electrical penetrations are installed in external walls below flood and groundwater levels.
- Water stops are provided in expansion and construction joints below flood and groundwater levels.

(7) The SF is constructed in accordance with the design documents, with any deviation from the design documents reconciled to demonstrate the as-built SF structural integrity.

Inspections, Tests, Analyses, and Acceptance Criteria

Table 2.16.14-1 provides a definition of the inspections, tests and analyses, together with associated acceptance criteria for the SF.

Table 2.16.14-1

ITAAC For The Service Water Building

Design Commitment	Inspection, Tests, Analyses	Acceptance Criteria
1. The Service Water Building (SF) is designed to accommodate the dynamic and static loading conditions associated with the various loads and load combinations that form the structural design basis. The loads are those associated with: • Natural phenomena - hurricane wind, floods, earthquakes, rain and snow. • Normal plant operation - live loads and dead loads.	Analyses of the SF will be conducted	The SF design conforms to the structural design basis loads specified in the Design Description of Subsection 2.16.14 associated with: • Natural phenomena - hurricane wind, floods, earthquakes, rain and snow. • Normal plant operation - live loads and dead loads.
2. The RTNSS systems in the SF are surrounded by barriers to protect them from hurricane wind and missiles.	Inspection of the as-built RTNSS equipment in the SF will be conducted.	The as-built RTNSS systems in the SF are surrounded by barriers to protect them from hurricane wind and missiles.
3. Internal flooding analysis of the SF is performed using ANSI/ANS 56.11-1988 guidelines to ensure protection of RTNSS equipment.	Internal flooding analysis of the SF will be performed.	Internal flooding analysis of the SF has been performed using ANSI/ANS 56.11-1988 guidelines to ensure protection of RTNSS equipment.
4. RTNSS equipment in the SF is located above the maximum flood level for that location or is qualified for flood condition.	Inspection of the as-built RTNSS equipment in the SF will be conducted.	The as-built RTNSS equipment in the SF is located above the maximum flood level for that location or is qualified for flood condition.

Table 2.16.14-1

ITAAC For The Service Water Building

Design Commitment	Inspection, Tests, Analyses	Acceptance Criteria
5. Plant Service Water equipment or other equipment designated as RTNSS that is located outdoors is qualified for flood condition and protected from hurricane wind and missiles when buried underground. RTNSS equipment that is not buried directly underground is protected by cell enclosures that provide flooding, wind and missile protection.	Inspection of the as-built RTNSS equipment located outdoors will be conducted.	The as-built RTNSS equipment that is located outdoors is qualified for flood condition and protected from hurricane wind and missiles when buried underground. RTNSS equipment that is not buried directly underground is protected by cell enclosures that provide flooding wind and missile protection.
6. The SF is protected against external flooding. The following protection features are: • Water seals at pipe and electrical penetrations are installed in external walls below flood and groundwater levels. • Water stops are provided in expansion and construction joints below flood and groundwater levels.	Inspection of the as-built SF flood control features will be conducted	The following as-built SF flood protection features exist: • Water seals at pipe and electrical penetrations are installed in external walls below flood and groundwater levels. • Water stops are provided in expansion and construction joints below flood and groundwater levels.
7. The SF is constructed in accordance with the design documents with any deviations from the design documents reconciled to demonstrate the as-built SF structural integrity	Inspection and reconciliation analyses of the as-built SF will be performed.	The as-built SF is constructed in accordance with the design documents, with any deviations reconciled appropriately to demonstrate structural integrity.

2.17 Intake Structure and Servicing Equipment

2.17.1 Intake and Discharge Structure

No ITAAC are required for this system.

2.18 YARD STRUCTURES AND EQUIPMENT

2.18.1 Oil Storage and Transfer Systems

No ITAAC are required for this system.

2.18.2 Site Security

No ITAAC are required for this system.

2.19 PLANT SECURITY SYSTEM

Design Description

The physical security system of the standard plant provides physical features to detect, delay, assist response to, and defend against the design basis threat (DBT) for radiological sabotage. The physical security system consists of physical barriers and an intrusion detection system. The details of the physical security system are categorized as Safeguards Information. The physical security system provides protection for vital equipment and plant personnel.

(1) a. Vital equipment is located only within a vital area.

b-1. Access to vital equipment requires passage through a vital area barrier.

(2) (Deleted)

(3) (Deleted)

(4) (Deleted)

(5) (Deleted)

(6) a. The external walls, doors, ceiling and floors in the Main Control Room and Central Alarm Station are bullet resistant to at least Underwriter's Laboratories (UL) 752 (2006) Level 4.

(7) (Deleted)

(8) a. (Deleted)

b. (Deleted)

(9) (Deleted)

(10) a. Unoccupied vital areas are locked and alarmed with activated intrusion detection systems that annunciate in the Central Alarm Station.

(11) a. (Deleted)

b-1. The Central Alarm Station is located inside a protected area and the interior is not visible from the perimeter of the protected area.

(12) a. The secondary security power supply system for alarm annunciator equipment contained in the Central Alarm Station and non-portable communications equipment contained in the Central Alarm Station is located within a vital area.

(13) a. Security alarm devices including transmission lines to annunciators are tamper indicating and self-checking, (e.g. an automatic indication is provided when failure of the alarm system or a component occurs, or when on standby power) and alarm annunciation indicates the type of alarm (e.g., intrusion alarms, emergency exit alarms) and location.

b-1. Intrusion detection and assessment systems provide visual display and audible annunciation of the alarm in the Central Alarm Station.

(14) a. Intrusion detection systems recording equipment exists to record onsite security alarm annunciation including the location of the alarm, false alarm, alarm check, and tamper indication and the type of alarm, location, alarm circuit, date, and time.

(15) a. Emergency exits through the vital area boundaries are alarmed and secured by locking devices that allow prompt egress during an emergency.

(16) a-1. The central Alarm Station has conventional (land line) telephone service with the control room and local law enforcement authorities.

b-1. The central Alarm Station is capable of continuous communication with security personnel.

c-1. Non-portable communications equipment in the Central Alarm Station must remain operable from an independent power source in the event of the loss of normal power.

Inspections, Tests, Analyses, and Acceptance Criteria

Table 2.19-1 provides a definition of the inspections, tests and analysis, together with associated acceptance criteria for physical security system.

Table 2.19-1

ITAAC For The Plant Security

Design Commitment	Inspections, Tests, Analyses	Acceptance Criteria
1a. Vital equipment is located only within a vital area.	Inspections will be performed of all vital equipment locations.	Vital equipment is located only within a vital area.
1b-1. Access to vital equipment requires passage through a vital area barrier.	Inspections will be performed of all vital equipment locations.	Vital equipment is located such that access to the vital equipment requires passage through a vital area barrier.
2. (Deleted)		
3. (Deleted)		
4. (Deleted)		
5. (Deleted)		
6a. The external walls, doors, ceiling and floors in the Main Control Room and Central Alarm Station are bullet resistant to at least Underwriter's Laboratories (UL) 752 (2006) Level 4.	Type test, analysis or a combination of type test and analysis of the external walls, doors, ceilings, and floors in the Main Control Room and Central Alarm Station will be performed.	The external walls, doors, ceilings, and floors in the Main Control Room and the Central Alarm Station are bullet resistant to at least UL 752 Level 4.
7. (Deleted)		
8a. (Deleted)		
8b. (Deleted)		
9. (Deleted)		

Table 2.19-1

ITAAC For The Plant Security

Design Commitment	Inspections, Tests, Analyses	Acceptance Criteria
10a. Unoccupied vital areas are locked and alarmed with activated intrusion detection systems that annunciate in the Central Alarm Station.	Tests, inspections, or a combination of tests and inspections of unoccupied vital area intrusion detection equipment and locking devices will be performed.	Unoccupied vital areas are locked and intrusion is detected and annunciated in the Central Alarm Station.
11a. (Deleted)		
11b-1. The Central Alarm Station is located inside a protected area and the interior is not visible from the perimeter of the protected area.	Inspections of the Central Alarm Station location will be performed.	The Central Alarm Station is located inside a protected area and the interior is not visible from the perimeter of the protected area.
12a. The secondary security power supply system for alarm annunciator equipment contained in the Central Alarm Station and non-portable communications equipment contained in the Central Alarm Station is located within a vital area.	Inspections of the secondary security power supply will be performed.	The secondary security power supply for alarm annunciator equipment contained in the Central Alarm Station and non-portable communications equipment contained in the Central Alarm Station is located within a vital area.

Table 2.19-1

ITAAC For The Plant Security

Design Commitment	Inspections, Tests, Analyses	Acceptance Criteria
13a. Security alarm devices including transmission lines to annunciators are tamper indicating and self-checking, (e.g. an automatic indication is provided when failure of the alarm system or a component occurs, or when on standby power) and alarm annunciation indicates the type of alarm, (e.g., intrusion alarms, emergency exit alarms) and location.	Tests will be performed on all security alarm devices and transmission lines.	Security alarm devices including transmission lines to annunciators are tamper indicating and self-checking (e.g., an automatic indication is provided when failure of the alarm system or a component occurs, or when the system is on standby power) and that alarm annunciation indicates the type of alarm, (e.g., intrusion alarms, emergency exit alarms) and location.
13b-1. Intrusion detection and assessment systems provide visual display and audible annunciation of the alarm in the Central Alarm Station.	Tests will be performed on intrusion detection and assessment systems.	The intrusion detection and assessment systems provide a visual display and audible annunciation of alarms in the Central Alarm Station.
14a. Intrusion detection systems recording equipment exists to record onsite security alarm annunciation including the location of the alarm, false alarm, alarm check, and tamper indication and the type of alarm, location, alarm circuit, date, and time.	Tests will be performed on the intrusion detection systems recording equipment.	Intrusion detection systems recording equipment is capable of recording each onsite security alarm annunciation including the location of the alarm, false alarm, alarm check, and tamper indication and the type of alarm, location, alarm circuit, date, and time.

Table 2.19-1

ITAAC For The Plant Security

Design Commitment	Inspections, Tests, Analyses	Acceptance Criteria
15a. Emergency exits through vital area boundaries are alarmed and secured by locking devices that allow prompt egress during an emergency.	Tests, inspections, or a combination of tests and inspections of emergency exits through vital area boundaries will be performed.	Emergency exits through vital area boundaries are alarmed and secured by locking devices that allow prompt egress during an emergency.
16a-1. The Central Alarm Station has conventional (land line) telephone service with the control room and local law enforcement authorities.	Tests, inspections, or a combination of tests and inspections of the Central Alarm Station conventional (land line) telephone service will be performed.	The Central Alarm Station is equipped with conventional (land line) telephone service with the control room and local law enforcement authorities.
16b-1. The Central Alarm Station is capable of continuous communication with security personnel.	Tests, inspections, or a combination of tests and inspections of the Central Alarm Station continuous communication capability will be performed.	The Central Alarm Station is capable of continuous communication with security officers, watchmen or armed response individuals, or other security personnel that have responsibilities during a contingency event.
16c-1. Non-portable communications equipment in the Central Alarm Station must remain operable from an independent power source in the event of the loss of normal power.	Tests, inspections or a combination of tests and inspections of the non-portable communications equipment will be performed.	Non-portable communication devices (including conventional telephone systems) in the Central Alarm Station are wired to an independent power supply that enables those systems to remain operable (without disruption) during the loss of normal power.

3. NON-SYSTEM BASED MATERIAL

3.1 DESIGN OF PIPING SYSTEMS AND COMPONENTS

Design Description

Piping systems and their components are designed and constructed in accordance with their applicable design code requirements identified in the individual system design specifications. The piping systems have a design life of 60 years. These requirements apply to systems that are ASME B&PV Code Class 1, 2, or 3, and are subject to ASME (B&PV) Code, Section III, pressure boundary requirements. The specific Tier 1 sections that contain these systems are as follows:

2.1.1 Reactor Pressure Vessel and Internals

2.1.2 Nuclear Boiler System

2.2.2 Control Rod Drive System

2.2.4 Standby Liquid Control System

2.4.1 Isolation Condenser System

2.4.2 Gravity-Driven Cooling System

2.6.1 Reactor Water Cleanup/Shutdown Cooling System

2.6.2 Fuel and Auxiliary Pools Cooling System

2.11.1 Turbine Main Steam System

2.15.1 Containment System

2.15.4 Passive Containment Cooling System

(1) (Deleted)

(2) (Deleted)

(3) Systems, structures, and components, that are required to be functional during and following an SSE, shall be protected against or qualified to withstand the dynamic and environmental effects associated with analyses of postulated failures in Seismic Category I and nonsafety-related piping systems.

(4) (Deleted)

(5) (Deleted)

(6) On an individual component or system basis, the as-built systems, structures, and components shall be reconciled with the analyses results of the postulated failures in Seismic Category I and nonsafety-related piping systems.

Inspections, Tests, Analyses, and Acceptance Criteria

Table 3.1-1 provides a definition of the inspections, test and analyses, together with associated acceptance criteria for the Piping Design.

Table 3.1-1

ITAAC For The Design of Piping Systems and Components

Design Commitment	Inspections, Tests, Analyses	Acceptance Criteria
1. (Deleted)		
2. (Deleted)		
3. Systems, structures, and components, that are required to be functional during and following an SSE, shall be protected against or qualified to withstand the dynamic and environmental effects associated with analyses of postulated failures in Seismic Category I and nonsafety-related piping systems.	Inspections of the as designed pipe-break analysis results report will be conducted. Pipe break events involving high-energy fluid systems are analyzed for the effects of pipe whip, jet impingement, flooding, room pressurization, and temperature effects. Pipe break events involving moderate-energy fluid systems are analyzed for wetting from spray, flooding, and other environmental effects, as appropriate. {{Design Acceptance Criteria}}	The as-designed pipe-break analysis concludes that for each postulated piping failure, the reactor can be shut down safely. Reports document the results of the analyses to determine where protection features are necessary to mitigate the consequences of a pipe break. {{Design Acceptance Criteria}}
4. (Deleted)		
5. (Deleted)		

Table 3.1-1

ITAAC For The Design of Piping Systems and Components

Design Commitment	Inspections, Tests, Analyses	Acceptance Criteria
6. On an individual component or system basis, the as-built systems, structures, and components shall be reconciled with the analyses results of the postulated failures in Seismic Category I and nonsafety-related piping systems.	A reconciliation analysis using the as-designed pipe-break analysis report and as-built information will be performed. Inspect the as-built piping systems and equipment to identify that the features that protect against dynamic effects of pipe failures, such as whip restraints, equipment shields, drainage systems, and physical separation of piping, equipment, and instrumentation are installed as defined in the design analyses.	On an individual component or system basis, the protective features are installed in the as-built plant as described in the design and reconciliation analysis.

3.2 SOFTWARE DEVELOPMENT

Inspections, Tests, Analyses, and Acceptance Criteria Summary

Design Description

The safety-related Distributed Control and Information Systems (Q-DCIS) comprise the platforms that are defined in Table 2.2.10-1. A subset of the nonsafety-related Distributed Control and Information Systems (N-DCIS) comprise the network segments that are defined in Table 2.2.11-1. These platforms and network segments comprise systems of integrated software and hardware elements. Software projects are developed for the various platforms and network segments.

Each platform and network segment software projects follows a development process that comprises the following 3-stages:

(1) Develop the platform and network segment software plans and cyber security programs for each platform. {{Design Acceptance Criteria}}

- Software Management Program Manual (SMPM)
  - Software Management Plan (SMP)
  - Software Development Plan (SDP)
  - Software Integration Plan (SintP)
  - Software Installation Plan (SIP)
  - Software Operation and Maintenance Plan (SOMP)
  - Software Training Plan (STrngP)
- Software Quality Assurance Program Manual (SQAPM)
  - Software Quality Assurance Plan (SQAP)
  - Software Safety Plan (SSP)
  - Software Verification & Validation Plan (SVVP)
  - Software Configuration Management Plan (SCMP)
  - Software Test Plan (STP)
- Cyber Security Program Plan (CySPP)
  - Cyber Security Program (CySP)

(2) Implement the software projects for each platform and network segment in accordance with the approved platform and network segment software plans and cyber security programs to ensure the process produces adequate software products at the conclusion of each software life-cycle phase baseline as documented by the life-cycle phase Summary Baseline Review Records (BRR).

(3) Perform a multiple-phase test process as part of the installation phase to confirm that the as-built platform and network segment performs as designed.

In support of the above described software development process, the following 3-stage software design commitments are made:

1a1. The SMP is developed for the RTIF software projects.

1a2. The SMP is developed for the NMS software projects.

1a3. The SMP is developed for the SSLC/ESF software projects.

1a4. The SMP is developed for the ATWS/SLC software projects.

1a5. The SMP is developed for the VBIF software projects.

1a6. The SMP is developed for the GENE DPS software projects.

1a7. The SMP is developed for the PIP software projects.

1a8. The SMP is developed for the HP CRD Isolation Bypass Function software projects.

1b1. The SDP is developed for the RTIF software projects.

1b2. The SDP is developed for the NMS software projects.

1b3. The SDP is developed for the SSLC/ESF software projects.

1b4. The SDP is developed for the ATWS/SLC software projects.

1b5. The SDP is developed for the VBIF software projects.

1b6. The SDP is developed for the GENE DPS software projects.

1b7. The SDP is developed for the PIP software projects.

1b8. The SDP is developed for the HP CRD Isolation Bypass Function software projects.

1c1. The SIntP is developed for the RTIF software projects.

1c2. The SIntP is developed for the NMS software projects.

1c3. The SIntP is developed for the SSLC/ESF software projects.

1c4. The SIntP is developed for the ATWS/SLC software projects.

1c5. The SIntP is developed for the VBIF software projects.

1c6. The SIntP is developed for the GENE DPS software projects.

1c7. The SIntP is developed for the PIP software projects.

1c8. The SIntP is developed for the HP CRD Isolation Bypass Function software projects.

1d1. The SIP is developed for the RTIF software projects.

1d2. The SIP is developed for the NMS software projects.

1d3. The SIP is developed for the SSLC/ESF software projects.

1d4. The SIP is developed for the ATWS/SLC software projects.

1d5. The SIP is developed for the VBIF software projects.

1d6. The SIP is developed for the GENE DPS software projects.

1d7. The SIP is developed for the PIP software projects.

1d8. The SIP is developed for the HP CRD Isolation Bypass Function software projects.

1e1. The SOMP is developed for the RTIF software projects.

1e2. The SOMP is developed for the NMS software projects.

1e3. The SOMP is developed for the SSLC/ESF software projects.

1e4. The SOMP is developed for the ATWS/SLC software projects.

1e5. The SOMP is developed for the VBIF software projects.

1e6. The SOMP is developed for the GENE DPS software projects.

1e7. The SOMP is developed for the PIP software projects.

1e8. The SOMP is developed for the HP CRD Isolation Bypass Function software projects.

1f1. The STrngP is developed for the RTIF software projects.

1f2. The STrngP is developed for the NMS software projects.

1f3. The STrngP is developed for the SSLC/ESF software projects.

1f4. The STrngP is developed for the ATWS/SLC software projects.

1f5. The STrngP is developed for the VBIF software projects.

1f6. The STrngP is developed for the GENE DPS software projects.

1f7. The STrngP is developed for the PIP software projects.

1f8. The STrngP is developed for the HP CRD Isolation Bypass Function software projects.

1g1. The SQAP is developed for the RTIF software projects.

1g2. The SQAP is developed for the NMS software projects.

1g3. The SQAP is developed for the SSLC/ESF software projects.

1g4. The SQAP is developed for the ATWS/SLC software projects.

1g5. The SQAP is developed for the VBIF software projects.

1g6. The SQAP is developed for the GENE DPS software projects.

1g7. The SQAP is developed for the PIP software projects.

1g8. The SQAP is developed for the HP CRD Isolation Bypass Function software projects.

1h1. The SSP is developed for the RTIF software projects.

1h2. The SSP is developed for the NMS software projects.

1h3. The SSP is developed for the SSLC/ESF software projects.

1h4. The SSP is developed for the ATWS/SLC software projects.

1h5. The SSP is developed for the VBIF software projects.

1h6. The SSP is developed for the GENE DPS software projects.

1h7. The SSP is developed for the PIP software projects.

1h8. The SSP is developed for the HP CRD Isolation Bypass Function software projects.

1i1. The SVVP is developed for the RTIF software projects.

1i2. The SVVP is developed for the NMS software projects.

1i3. The SVVP is developed for the SSLC/ESF software projects.

1i4. The SVVP is developed for the ATWS/SLC software projects.

1i5. The SVVP is developed for the VBIF software projects.

1i6. The SVVP is developed for the GENE DPS software projects.

1i7. The SVVP is developed for the PIP software projects.

1i8. The SVVP is developed for the HP CRD Isolation Bypass Function software projects.

1j1. The SCMP is developed for the RTIF software projects.

1j2. The SCMP is developed for the NMS software projects.

1j3. The SCMP is developed for the SSLC/ESF software projects.

1j4. The SCMP is developed for the ATWS/SLC software projects.

1j5. The SCMP is developed for the VBIF software projects.

1j6. The SCMP is developed for the GENE DPS software projects.

1j7. The SCMP is developed for the PIP software projects.

1j8. The SCMP is developed for the HP CRD Isolation Bypass Function software projects.

1k1. The STP is developed for the RTIF software projects.

1k2. The STP is developed for the NMS software projects.

1k3. The STP is developed for the SSLC/ESF software projects.

1k4. The STP is developed for the ATWS/SLC software projects.

1k5. The STP is developed for the VBIF software projects.

1k6. The STP is developed for the GENE DPS software projects.

1k7. The STP is developed for the PIP software projects.

1k8. The STP is developed for the HP CRD Isolation Bypass Function software projects.

1l1. The CySP is developed for the RTIF software projects.

1l2. The CySP is developed for the NMS software projects.

1l3. The CySP is developed for the SSLC/ESF software projects.

1l4. The CySP is developed for the ATWS/SLC software projects.

1l5. The CySP is developed for the VBIF software projects.

1l6. The CySP is developed for the GENE DPS software projects.

1l7. The CySP is developed for the PIP software projects.

1l8. The CySP is developed for the HP CRD Isolation Bypass Function software projects.

2a1. The planning phase activities detailed in the RTIF software plans and CySP are completed for the RTIF software projects.

2a2. The planning phase activities detailed in the NMS software plans and CySP are completed for the NMS software projects.

2a3. The planning phase activities detailed in the SSLC/ESF software plans and CySP are completed for the SSLC/ESF software projects.

2a4. The planning phase activities detailed in the ATWS/SLC software plans and CySP are completed for the ATWS/SLC software projects.

2a5. The planning phase activities detailed in the VBIF software plans and CySP are completed for the VBIF software projects.

2a6. The planning phase activities detailed in the GENE DPS software plans and CySP are completed for the GENE DPS software projects.

2a7. The planning phase activities detailed in the PIP software plans and CySP are completed for the PIP software projects.

2a8. The planning phase activities detailed in the HP CRD Isolation Bypass Function software plans and CySP are completed for the HP CRD Isolation Bypass Function software projects.

2b1. The requirements phase activities detailed in the RTIF software plans and the CySP are completed for the RTIF software projects.

2b2. The requirements phase activities detailed in the NMS software plans and the CySP are completed for the NMS software projects.

2b3. The requirements phase activities detailed in the SSLC/ESF software plans and the CySP are completed for the SSLC/ESF software projects.

2b4. The requirements phase activities detailed in the ATWS/SLC software plans and the CySP are completed for the ATWS/SLC software projects.

2b5. The requirements phase activities detailed in the VBIF software plans and the CySP are completed for the VBIF software projects.

2b6. The requirements phase activities detailed in the GENE DPS software plans and the CySP are completed for the GENE DPS software projects.

2b7. The requirements phase activities detailed in the PIP software plans and the CySP are completed for the PIP software projects.

2b8. The requirements phase activities detailed in the HP CRD Isolation Bypass Function software plans and the CySP are completed for the HP CRD Isolation Bypass Function software projects.

2c1. The design phase activities detailed in the RTIF software plans and the CySP are completed for the RTIF software projects.

2c2. The design phase activities detailed in the NMS software plans and the CySP are completed for the NMS software projects.

2c3. The design phase activities detailed in the SSLC/ESF software plans and the CySP are completed for the SSLC/ESF software projects.

2c4. The design phase activities detailed in the ATWS/SLC software plans and the CySP are completed for the ATWS/SLC software projects.

2c5. The design phase activities detailed in the VBIF software plans and the CySP are completed for the VBIF software projects.

2c6. The design phase activities detailed in the GENE DPS software plans and the CySP are completed for the GENE DPS software projects.

2c7. The design phase activities detailed in the PIP software plans and the CySP are completed for the PIP software projects.

2c8. The design phase activities detailed in the HP CRD Isolation Bypass Function software plans and the CySP are completed for the HP CRD Isolation Bypass Function software projects.

2d1. The implementation phase activities detailed in the RTIF software plans and CySP are completed for the RTIF software projects.

2d2. The implementation phase activities detailed in the NMS software plans and CySP are completed for the NMS software projects.

2d3. The implementation phase activities detailed in the SSLC/ESF software plans and CySP are completed for the SSLC/ESF software projects.

2d4. The implementation phase activities detailed in the ATWS/SLC software plans and CySP are completed for the ATWS/SLC software projects.

2d5. The implementation phase activities detailed in the VBIF software plans and CySP are completed for the VBIF software projects.

2d6. The implementation phase activities detailed in the GENE DPS software plans and CySP are completed for the GENE DPS software projects.

2d7. The implementation phase activities detailed in the PIP software plans and CySP are completed for the PIP software projects.

2d8. The implementation phase activities detailed in the HP CRD Isolation Bypass Function software plans and CySP are completed for the HP CRD Isolation Bypass Function software projects.

2e1. The test phase activities detailed in the RTIF software plans and CySP are completed for the RTIF software projects.

2e2. The test phase activities detailed in the NMS software plans and CySP are completed for the NMS software projects.

2e3. The test phase activities detailed in the SSLC/ESF software plans and CySP are completed for the SSLC/ESF software projects.

2e4. The test phase activities detailed in the ATWS/SLC software plans and CySP are completed for the ATWS/SLC software projects.

2e5. The test phase activities detailed in the VBIF software plans and CySP are completed for the VBIF software projects.

2e6. The test phase activities detailed in the GENE DPS software plans and CySP are completed for the GENE DPS software projects.

2e7. The test phase activities detailed in the PIP software plans and CySP are completed for the PIP software projects.

2e8. The test phase activities detailed in the HP CRD software plans and CySP are completed for the HP CRD Isolation Bypass Function software projects.

3a1. The installation phase activities detailed in the RTIF software plans and CySP are completed for the RTIF software projects.

3a2. The RTIF software projects performs as designed.

3a3. The RTIF software projects is cyber secure.

3b1. The installation phase activities detailed in the NMS software plans and CySP are completed for the NMS software projects.

3b2. The NMS software projects performs as designed.

3b3. The NMS software projects is cyber secure.

3c1. The installation phase activities detailed in the SSLC/ESF software plans and CySP are completed for the SSLC/ESF software projects

3c2. The SSLC/ESF software projects performs as designed.

3c3. The SSLC/ESF software projects is cyber secure.

3d1. The installation phase activities detailed in the ATWS/SLC software plans and CySP are completed for the ATWS/SLC software projects.

3d2. The ATWS/SLC software projects performs as designed.

3d3. The ATWS/SLC software projects is cyber secure.

3e1. The installation phase activities detailed in the VBIF software plans and CySP are completed for the VBIF software projects.

3e2. The VBIF software projects performs as designed.

3e3. The VBIF software projects is cyber secure.

3f1. The installation phase activities detailed in the GENE DPS software plans and CySP are completed for the GENE DPS software projects.

3f2. The GENE DPS software projects performs as designed.

3f3. The GENE DPS software projects is cyber secure.

3g1. The installation phase activities detailed in the PIP software plans and CySP are completed for the PIP software projects.

3g2. The PIP software projects performs as designed.

3g3. The PIP software projects is cyber secure.

3h1. The installation phase activities detailed in the HP CRD Isolation Bypass Function software plans and CySP are completed for the HP CRD Isolation Bypass Function software projects.

3h2. The HP CRD Isolation Bypass Function software projects performs as designed.

3h3. The HP CRD Isolation Bypass Function software projects is cyber secure.

3i. The complete ESBWR instrumentation and control systems with sensors and actuators is capable of operating as designed.

3j1. The RTIF software projects performs as designed.

3j2. The RTIF software projects is cyber secure.

3k1. The NMS software projects performs as designed.

3k2. The NMS software projects is cyber secure.

3l1. The SSLC/ESF software projects performs as designed.

3l2. The SSLC/ESF software projects is cyber secure.

3m1. The ATWS/SLC software projects performs as designed.

3m2. The ATWS/SLC software projects is cyber secure.

3n1. The VBIF software projects performs as designed.

3n2. The VBIF software projects is cyber secure.

3o1. The GENE DPS software projects performs as designed.

3o2. The GENE DPS software projects is cyber secure.

3p1. The PIP software projects performs as designed.

3p2. The PIP software projects is cyber secure.

3q1. The HP CRD Isolation Bypass Function software projects performs as designed.

3q2. The HP CRD Isolation Bypass Function software projects is cyber secure.

Inspections, Tests, Analyses, and Acceptance Criteria

Table 3.2-1 defines the inspections, tests and analyses, together with associated acceptance criteria, which will be applied to the software and hardware platforms and network segments.

Table 3.2-1
ITAAC For Software Development

Design Commitment	Inspections, Tests, Analyses	Acceptance Criteria
1a1. The SMP is developed for the RTIF software projects.	Inspection of the SMP for the RTIF software projects will be performed. {{Design Acceptance Criteria}}	The SMP for the RTIF software projects complies with the criteria contained in the SMPM. {{Design Acceptance Criteria}}
1a2. The SMP is developed for the NMS software projects.	Inspection of the SMP for the NMS software projects will be performed. {{Design Acceptance Criteria}}	The SMP for NMS software projects complies with the criteria contained in the SMPM. {{Design Acceptance Criteria}}
1a3. The SMP is developed for the SSLC/ESF software projects.	Inspection of the SMP for the SSLC/ESF software projects will be performed. {{Design Acceptance Criteria}}	The SMP for SSLC/ESF software projects complies with the criteria contained in the SMPM. {{Design Acceptance Criteria}}
1a4 The SMP is developed for the ATWS/SLC software projects.	Inspection of the SMP for the ATWS/SLC software projects will be performed. {{Design Acceptance Criteria}}	The SMP for ATWS/SLC software projects complies with the criteria contained in the SMPM. {{Design Acceptance Criteria}}
1a5. The SMP is developed for the VBIF software projects.	Inspection of the SMP for the VBIF software projects will be performed. {{Design Acceptance Criteria}}	The SMP for VBIF software projects complies with the criteria contained in the SMPM. {{Design Acceptance Criteria}}

Table 3.2-1
ITAAC For Software Development

Design Commitment	Inspections, Tests, Analyses	Acceptance Criteria
1a6. The SMP is developed for the GENE DPS software projects.	Inspection of the SMP for the GENE DPS software projects will be performed. {{Design Acceptance Criteria}}	The SMP for GENE DPS software projects complies with the criteria contained in the SMPM. {{Design Acceptance Criteria}}
1a7. The SMP is developed for the PIP software projects.	Inspection of the SMP for the PIP software projects will be performed. {{Design Acceptance Criteria}}	The SMP for PIP software projects complies with the criteria contained in the SMPM. {{Design Acceptance Criteria}}
1a8. The SMP is developed for the HP CRD Isolation Bypass Function software projects.	Inspection of the SMP for the HP CRD Isolation Bypass Function software projects will be performed. {{Design Acceptance Criteria}}	The SMP for HP CRD Isolation Bypass Function software projects complies with the criteria contained in the SMPM. {{Design Acceptance Criteria}}
1b1. The SDP is developed for the RTIF software projects.	Inspection of the SDP for the RTIF software projects will be performed. {{Design Acceptance Criteria}}	The SDP for the RTIF software projects complies with the criteria contained in the SMPM. {{Design Acceptance Criteria}}
1b2. The SDP is developed for the NMS software projects.	Inspection of the SDP for the NMS software projects will be performed. {{Design Acceptance Criteria}}	The SDP for NMS software projects complies with the criteria contained in the SMPM. {{Design Acceptance Criteria}}

Table 3.2-1
ITAAC For Software Development

Design Commitment	Inspections, Tests, Analyses	Acceptance Criteria
1b3. The SDP is developed for the SSLC/ESF software projects.	Inspection of the SDP for the SSLC/ESF software projects will be performed. {{Design Acceptance Criteria}}	The SDP for SSLC/ESF software projects complies with the criteria contained in the SMPM. {{Design Acceptance Criteria}}
1b4 The SDP is developed for the ATWS/SLC software projects.	Inspection of the SDP for the ATWS/SLC software projects will be performed. {{Design Acceptance Criteria}}	The SDP for ATWS/SLC software projects complies with the criteria contained in the SMPM. {{Design Acceptance Criteria}}
1b5. The SDP is developed for the VBIF software projects.	Inspection of the SDP for the VBIF software projects will be performed. {{Design Acceptance Criteria}}	The SDP for VBIF software projects complies with the criteria contained in the SMPM. {{Design Acceptance Criteria}}
1b6. The SDP is developed for the GENE DPS software projects.	Inspection of the SDP for the GENE DPS software projects will be performed. {{Design Acceptance Criteria}}	The SDP for GENE DPS software projects complies with the criteria contained in the SMPM. {{Design Acceptance Criteria}}
1b7. The SDP is developed for the PIP software projects.	Inspection of the SDP for the PIP software projects will be performed. {{Design Acceptance Criteria}}	The SDP for PIP software projects complies with the criteria contained in the SMPM. {{Design Acceptance Criteria}}

Table 3.2-1
ITAAC For Software Development

Design Commitment	Inspections, Tests, Analyses	Acceptance Criteria
1b8. The SDP is developed for the HP CRD Isolation Bypass Function software projects.	Inspection of the SDP for the HP CRD Isolation Bypass Function software projects will be performed. {{Design Acceptance Criteria}}	The SDP for HP CRD Isolation Bypass Function software projects complies with the criteria contained in the SMPM. {{Design Acceptance Criteria}}
1c1. The SIntP is developed for the RTIF software projects.	Inspection of the SIntP for the RTIF software projects will be performed. {{Design Acceptance Criteria}}	The SIntP for the RTIF software projects complies with the criteria contained in the SMPM. {{Design Acceptance Criteria}}
1c2. The SIntP is developed for the NMS software projects.	Inspection of the SIntP for the NMS software projects will be performed. {{Design Acceptance Criteria}}	The SIntP for NMS software projects complies with the criteria contained in the SMPM. {{Design Acceptance Criteria}}
1c3. The SIntP is developed for the SSLC/ESF software projects.	Inspection of the SIntP for the SSLC/ESF software projects will be performed. {{Design Acceptance Criteria}}	The SIntP for SSLC/ESF software projects complies with the criteria contained in the SMPM. {{Design Acceptance Criteria}}
1c4. The SIntP is developed for the ATWS/SLC software projects.	Inspection of the SIntP for the ATWS/SLC software projects will be performed. {{Design Acceptance Criteria}}	The SIntP for ATWS/SLC software projects complies with the criteria contained in the SMPM. {{Design Acceptance Criteria}}

Table 3.2-1
ITAAC For Software Development

Design Commitment	Inspections, Tests, Analyses	Acceptance Criteria
1c5. The SIntP is developed for the VBIF software projects.	Inspection of the SIntP for the VBIF software projects will be performed. {{Design Acceptance Criteria}}	The SIntP for VBIF software projects complies with the criteria contained in the SMPM. {{Design Acceptance Criteria}}
1c6. The SIntP is developed for the GENE DPS software projects.	Inspection of the SIntP for the GENE DPS software projects will be performed. {{Design Acceptance Criteria}}	The SIntP for GENE DPS software projects complies with the criteria contained in the SMPM. {{Design Acceptance Criteria}}
1c7. The SIntP is developed for the PIP software projects.	Inspection of the SIntP for the PIP software projects will be performed. {{Design Acceptance Criteria}}	The SIntP for PIP software projects complies with the criteria contained in the SMPM. {{Design Acceptance Criteria}}
1c8. The SIntP is developed for the HP CRD Isolation Bypass Function software projects.	Inspection of the SIntP for the HP CRD Isolation Bypass Function software projects will be performed. {{Design Acceptance Criteria}}	The SIntP for HP CRD Isolation Bypass Function software projects complies with the criteria contained in the SMPM. {{Design Acceptance Criteria}}
1d1. The SIP is developed for the RTIF software projects.	Inspection of the SIP for the RTIF software projects will be performed. {{Design Acceptance Criteria}}	The SIP for the RTIF software projects complies with the criteria contained in the SMPM. {{Design Acceptance Criteria}}

Table 3.2-1
ITAAC For Software Development

Design Commitment	Inspections, Tests, Analyses	Acceptance Criteria
1d2. The SIP is developed for the NMS software projects.	Inspection of the SIP for the NMS software projects will be performed. {{Design Acceptance Criteria}}	The SIP for NMS software projects complies with the criteria contained in the SMPM. {{Design Acceptance Criteria}}
1d3. The SIP is developed for the SSLC/ESF software projects.	Inspection of the SIP for the SSLC/ESF software projects will be performed. {{Design Acceptance Criteria}}	The SIP for SSLC/ESF software projects complies with the criteria contained in the SMPM. {{Design Acceptance Criteria}}
1d4. The SIP is developed for the ATWS/SLC software projects.	Inspection of the SIP for the ATWS/SLC software projects will be performed. {{Design Acceptance Criteria}}	The SIP for ATWS/SLC software projects complies with the criteria contained in the SMPM. {{Design Acceptance Criteria}}
1d5. The SIP is developed for the VBIF software projects.	Inspection of the SIP for the VBIF software projects will be performed. {{Design Acceptance Criteria}}	The SIP for VBIF software projects complies with the criteria contained in the SMPM. {{Design Acceptance Criteria}}
1d6. The SIP is developed for the GENE DPS software projects.	Inspection of the SIP for the GENE DPS software projects will be performed. {{Design Acceptance Criteria}}	The SIP for GENE DPS software projects complies with the criteria contained in the SMPM. {{Design Acceptance Criteria}}
1d7. The SIP is developed for the PIP software projects.	Inspection of the SIP for the PIP software projects will be performed. {{Design Acceptance Criteria}}	The SIP for PIP software projects complies with the criteria contained in the SMPM. {{Design Acceptance Criteria}}

Table 3.2-1
ITAAC For Software Development

Design Commitment	Inspections, Tests, Analyses	Acceptance Criteria
1d8. The SIP is developed for the HP CRD Isolation Bypass Function software projects.	Inspection of the SIP for the HP CRD Isolation Bypass Function software projects will be performed. {{Design Acceptance Criteria}}	The SIP for HP CRD Isolation Bypass Function software projects complies with the criteria contained in the SMPM. {{Design Acceptance Criteria}}
1e1. The SOMP is developed for the RTIF software projects.	Inspection of the SOMP for the RTIF software projects will be performed. {{Design Acceptance Criteria}}	The SOMP for the RTIF software projects complies with the criteria contained in the SMPM. {{Design Acceptance Criteria}}
1e2. The SOMP is developed for the NMS software projects.	Inspection of the SOMP for the NMS software projects will be performed. {{Design Acceptance Criteria}}	The SOMP for NMS software projects complies with the criteria contained in the SMPM. {{Design Acceptance Criteria}}
1e3. The SOMP is developed for the SSLC/ESF software projects.	Inspection of the SOMP for the SSLC/ESF software projects will be performed. {{Design Acceptance Criteria}}	The SOMP for SSLC/ESF software projects complies with the criteria contained in the SMPM. {{Design Acceptance Criteria}}
1e4. The SOMP is developed for the ATWS/SLC software projects.	Inspection of the SOMP for the ATWS/SLC software projects will be performed. {{Design Acceptance Criteria}}	The SOMP for ATWS/SLC software projects complies with the criteria contained in the SMPM. {{Design Acceptance Criteria}}

Table 3.2-1
ITAAC For Software Development

Design Commitment	Inspections, Tests, Analyses	Acceptance Criteria
1e5. The SOMP is developed for the VBIF software projects.	Inspection of the SOMP for the VBIF software projects will be performed. {{Design Acceptance Criteria}}	The SOMP for VBIF software projects complies with the criteria contained in the SMPM. {{Design Acceptance Criteria}}
1e6. The SOMP is developed for the GENE DPS software projects.	Inspection of the SOMP for the GENE DPS software projects will be performed. {{Design Acceptance Criteria}}	The SOMP for GENE DPS software projects complies with the criteria contained in the SMPM. {{Design Acceptance Criteria}}
1e7. The SOMP is developed for the PIP software projects.	Inspection of the SOMP for the PIP software projects will be performed. {{Design Acceptance Criteria}}	The SOMP for PIP software projects complies with the criteria contained in the SMPM. {{Design Acceptance Criteria}}
1e8. The SOMP is developed for the HP CRD Isolation Bypass Function software projects.	Inspection of the SOMP for the HP CRD Isolation Bypass Function software projects will be performed. {{Design Acceptance Criteria}}	The SOMP for HP CRD Isolation Bypass Function software projects complies with the criteria contained in the SMPM. {{Design Acceptance Criteria}}
1f1. The STrngP is developed for the RTIF software projects.	Inspection of the STrngP for the RTIF software projects will be performed. {{Design Acceptance Criteria}}	The STrngP for the RTIF software projects complies with the criteria contained in the SMPM. {{Design Acceptance Criteria}}

Table 3.2-1
ITAAC For Software Development

Design Commitment	Inspections, Tests, Analyses	Acceptance Criteria
1f2. The STrngP is developed for the NMS software projects.	Inspection of the STrngP for the NMS software projects will be performed. {{Design Acceptance Criteria}}	The STrngP for NMS software projects complies with the criteria contained in the SMPM. {{Design Acceptance Criteria}}
1f3. The STrngP is developed for the SSLC/ESF software projects.	Inspection of the STrngP for the SSLC/ESF software projects will be performed. {{Design Acceptance Criteria}}	The STrngP for SSLC/ESF software projects complies with the criteria contained in the SMPM. {{Design Acceptance Criteria}}
1f4. The STrngP is developed for the ATWS/SLC software projects.	Inspection of the STrngP for the ATWS/SLC software projects will be performed. {{Design Acceptance Criteria}}	The STrngP for ATWS/SLC software projects complies with the criteria contained in the SMPM. {{Design Acceptance Criteria}}
1f5. The STrngP is developed for the VBIF software projects.	Inspection of the STrngP for the VBIF software projects will be performed. {{Design Acceptance Criteria}}	The STrngP for VBIF software projects complies with the criteria contained in the SMPM. {{Design Acceptance Criteria}}
1f6. The STrngP is developed for the GENE DPS software projects.	Inspection of the STrngP for the GENE DPS software projects will be performed. {{Design Acceptance Criteria}}	The STrngP for GENE DPS software projects complies with the criteria contained in the SMPM. {{Design Acceptance Criteria}}

Table 3.2-1
ITAAC For Software Development

Design Commitment	Inspections, Tests, Analyses	Acceptance Criteria
1f7. The STrngP is developed for the PIP software projects.	Inspection of the STrngP for the PIP software projects will be performed. {{Design Acceptance Criteria}}	The STrngP for PIP software projects complies with the criteria contained in the SMPM. {{Design Acceptance Criteria}}
1f8. The STrngP is developed for the HP CRD Isolation Bypass Function software projects.	Inspection of the STrngP for the HP CRD Isolation Bypass Function software projects will be performed. {{Design Acceptance Criteria}}	The STrngP for HP CRD Isolation Bypass Function software projects complies with the criteria contained in the SMPM. {{Design Acceptance Criteria}}
1g1. The SQAP is developed for the RTIF software projects.	Inspection of the SQAP for the RTIF software projects will be performed. {Design Acceptance Criteria}}	The SQAP for the RTIF software projects complies with the criteria contained in the SQAPM. {{Design Acceptance Criteria}}
1g2. The SQAP is developed for the NMS software projects.	Inspection of the SQAP for the NMS software projects will be performed. {{Design Acceptance Criteria}}	The SQAP for NMS software projects complies with the criteria contained in the SQAPM. {{Design Acceptance Criteria}}
1g3. The SQAP is developed for the SSLC/ESF software projects.	Inspection of the SQAP for the SSLC/ESF software projects will be performed. {{Design Acceptance Criteria}}	The SQAP for SSLC/ESF software projects complies with the criteria contained in the SQAPM. {{Design Acceptance Criteria}}

Table 3.2-1
ITAAC For Software Development

Design Commitment	Inspections, Tests, Analyses	Acceptance Criteria
1g4. The SQAP is developed for the ATWS/SLC software projects.	Inspection of the SQAP for the ATWS/SLC software projects will be performed. {{Design Acceptance Criteria}}	The SQAP for ATWS/SLC software projects complies with the criteria contained in the SQAPM. {{Design Acceptance Criteria}}
1g5. The SQAP is developed for the VBIF software projects.	Inspection of the SQAP for the VBIF software projects will be performed. {{Design Acceptance Criteria}}	The SQAP for VBIF software projects complies with the criteria contained in the SQAPM. {{Design Acceptance Criteria}}
1g6. The SQAP is developed for the GENE DPS software projects.	Inspection of the SQAP for the GENE DPS software projects will be performed. {{Design Acceptance Criteria}}	The SQAP for GENE DPS software projects complies with the criteria contained in the SQAPM. {{Design Acceptance Criteria}}
1g7. The SQAP is developed for the PIP software projects.	Inspection of the SQAP for the PIP software projects will be performed. {{Design Acceptance Criteria}}	The SQAP for PIP software projects complies with the criteria contained in the SQAPM. {{Design Acceptance Criteria}}
1g8. The SQAP is developed for the HP CRD Isolation Bypass Function software projects.	Inspection of the SQAP for the HP CRD Isolation Bypass Function software projects will be performed. {{Design Acceptance Criteria}}	The SQAP for HP CRD Isolation Bypass Function software projects complies with the criteria contained in the SQAPM. {{Design Acceptance Criteria}}

Table 3.2-1
ITAAC For Software Development

Design Commitment	Inspections, Tests, Analyses	Acceptance Criteria
1h1. The SSP is developed for the RTIF software projects.	Inspection of the SSP for the RTIF software projects will be performed. {{Design Acceptance Criteria}}	The SSP for the RTIF software projects complies with the criteria contained in the SQAPM. {{Design Acceptance Criteria}}
1h2. The SSP is developed for the NMS software projects.	Inspection of the SSP for the NMS software projects will be performed. {{Design Acceptance Criteria}}	The SSP for NMS software projects complies with the criteria contained in the SQAPM. {{Design Acceptance Criteria}}
1h3. The SSP is developed for the SSLC/ESF software projects.	Inspection of the SSP for the SSLC/ESF software projects will be performed. {{Design Acceptance Criteria}}	The SSP for SSLC/ESF software projects complies with the criteria contained in the SQAPM. {{Design Acceptance Criteria}}
1h4. The SSP is developed for the ATWS/SLC software projects.	Inspection of the SSP for the ATWS/SLC software projects will be performed. {{Design Acceptance Criteria}}	The SSP for ATWS/SLC software projects complies with the criteria contained in the SQAPM. {{Design Acceptance Criteria}}
1h5. The SSP is developed for the VBIF software projects.	Inspection of the SSP for the VBIF software projects will be performed. {{Design Acceptance Criteria}}	The SSP for VBIF software projects complies with the criteria contained in the SQAPM. {{Design Acceptance Criteria}}

Table 3.2-1
ITAAC For Software Development

Design Commitment	Inspections, Tests, Analyses	Acceptance Criteria
1h6. The SSP is developed for the GENE DPS software projects.	Inspection of the SSP for the GENE DPS software projects will be performed. {{Design Acceptance Criteria}}	The SSP for GENE DPS software projects complies with the criteria contained in the SQAPM. {{Design Acceptance Criteria}}
1h7. The SSP is developed for the PIP software projects.	Inspection of the SSP for the PIP software projects will be performed. {{Design Acceptance Criteria}}	The SSP for PIP software projects complies with the criteria contained in the SQAPM. {{Design Acceptance Criteria}}
1h8. The SSP is developed for the HP CRD Isolation Bypass Function software projects.	Inspection of the SSP for the HP CRD Isolation Bypass Function software projects will be performed. {{Design Acceptance Criteria}}	The SSP for HP CRD Isolation Bypass Function software projects complies with the criteria contained in the SQAPM. {{Design Acceptance Criteria}}
1i1. The SVVP is developed for the RTIF software projects.	Inspection of the SVVP for the RTIF software projects will be performed. {{Design Acceptance Criteria}}	The SVVP for the RTIF software projects complies with the criteria contained in the SQAPM. {{Design Acceptance Criteria}}
1i2. The SVVP is developed for the NMS software projects.	Inspection of the SVVP for the NMS software projects will be performed. {{Design Acceptance Criteria}}	The SVVP for NMS software projects complies with the criteria contained in the SQAPM. {{Design Acceptance Criteria}}

Table 3.2-1
ITAAC For Software Development

Design Commitment	Inspections, Tests, Analyses	Acceptance Criteria
1i3. The SVVP is developed for the SSLC/ESF software projects.	Inspection of the SVVP for the SSLC/ESF software projects will be performed. {{Design Acceptance Criteria}}	The SVVP for SSLC/ESF software projects complies with the criteria contained in the SQAPM. {{Design Acceptance Criteria}}
1i4. The SVVP is developed for the ATWS/SLC software projects.	Inspection of the SVVP for the ATWS/SLC software projects will be performed. {{Design Acceptance Criteria}}	The SVVP for ATWS/SLC software projects complies with the criteria contained in the SQAPM. {{Design Acceptance Criteria}}
1i5. The SVVP is developed for the VBIF software projects.	Inspection of the SVVP for the VBIF software projects will be performed. {{Design Acceptance Criteria}}	The SVVP for VBIF software projects complies with the criteria contained in the SQAPM. {{Design Acceptance Criteria}}
1i6. The SVVP is developed for the GENE DPS software projects.	Inspection of the SVVP for the GENE DPS software projects will be performed. {{Design Acceptance Criteria}}	The SVVP for GENE DPS software projects complies with the criteria contained in the SQAPM. {{Design Acceptance Criteria}}
1i7. The SVVP is developed for the PIP software projects.	Inspection of the SVVP for the PIP software projects will be performed. {{Design Acceptance Criteria}}	The SVVP for PIP software projects complies with the criteria contained in the SQAPM. {{Design Acceptance Criteria}}

Table 3.2-1
ITAAC For Software Development

Design Commitment	Inspections, Tests, Analyses	Acceptance Criteria
1i8. The SVVP is developed for the HP CRD Isolation Bypass Function software projects.	Inspection of the SVVP for the HP CRD Isolation Bypass Function software projects will be performed. {{Design Acceptance Criteria}}	The SVVP for HP CRD Isolation Bypass Function software projects complies with the criteria contained in the SQAPM. {{Design Acceptance Criteria}}
1j1. The SCMP is developed for the RTIF software projects.	Inspection of the SCMP for the RTIF software projects will be performed. {{Design Acceptance Criteria}}	The SCMP for the RTIF software projects complies with the criteria contained in the SQAPM. {{Design Acceptance Criteria}}
1j2. The SCMP is developed for the NMS software projects.	Inspection of the SCMP for the NMS software projects will be performed. {{Design Acceptance Criteria}}	The SCMP for NMS software projects complies with the criteria contained in the SQAPM. {{Design Acceptance Criteria}}
1j3. The SCMP is developed for the SSLC/ESF software projects.	Inspection of the SCMP for the SSLC/ESF software projects will be performed. {{Design Acceptance Criteria}}	The SCMP for SSLC/ESF software projects complies with the criteria contained in the SQAPM. {{Design Acceptance Criteria}}
1j4. The SCMP is developed for the ATWS/SLC software projects.	Inspection of the SCMP for the ATWS/SLC software projects will be performed. {{Design Acceptance Criteria}}	The SCMP for ATWS/SLC software projects complies with the criteria contained in the SQAPM. {{Design Acceptance Criteria}}

Table 3.2-1
ITAAC For Software Development

Design Commitment	Inspections, Tests, Analyses	Acceptance Criteria
1j5. The SCMP is developed for the VBIF software projects.	Inspection of the SCMP for the VBIF software projects will be performed. {{Design Acceptance Criteria}}	The SCMP for VBIF software projects complies with the criteria contained in the SQAPM. {{Design Acceptance Criteria}}
1j6. The SCMP is developed for the GENE DPS software projects.	Inspection of the SCMP for the GENE DPS software projects will be performed. {{Design Acceptance Criteria}}	The SCMP for GENE DPS software projects complies with the criteria contained in the SQAPM. {{Design Acceptance Criteria}}
1j7. The SCMP is developed for the PIP software projects.	Inspection of the SCMP for the PIP software projects will be performed. {{Design Acceptance Criteria}}	The SCMP for PIP software projects complies with the criteria contained in the SQAPM. {{Design Acceptance Criteria}}
1j8. The SCMP is developed for the HP CRD Isolation Bypass Function software projects.	Inspection of the SCMP for the HP CRD Isolation Bypass Function software projects will be performed. {{Design Acceptance Criteria}}	The SCMP for HP CRD Isolation Bypass Function software projects complies with the criteria contained in the SQAPM. {{Design Acceptance Criteria}}
1k1. The STP is developed for the RTIF software projects.	Inspection of the STP for the RTIF software projects will be performed. {{Design Acceptance Criteria}}	The STP for the RTIF software projects complies with the criteria contained in the SQAPM. {{Design Acceptance Criteria}}

Table 3.2-1
ITAAC For Software Development

Design Commitment	Inspections, Tests, Analyses	Acceptance Criteria
1k2. The STP is developed for the NMS software projects.	Inspection of the STP for the NMS software projects will be performed. {{Design Acceptance Criteria}}	The STP for NMS software projects complies with the criteria contained in the SQAPM. {{Design Acceptance Criteria}}
1k3. The STP is developed for the SSLC/ESF software projects.	Inspection of the STP for the SSLC/ESF software projects will be performed. {{Design Acceptance Criteria}}	The STP for SSLC/ESF software projects complies with the criteria contained in the SQAPM. {{Design Acceptance Criteria}}
1k4. The STP is developed for the ATWS/SLC software projects.	Inspection of the STP for the ATWS/SLC software projects will be performed. {{Design Acceptance Criteria}}	The STP for ATWS/SLC software projects complies with the criteria contained in the SQAPM. {{Design Acceptance Criteria}}
1k5. The STP is developed for the VBIF software projects.	Inspection of the STP for the VBIF software projects will be performed. {{Design Acceptance Criteria}}	The STP for VBIF software projects complies with the criteria contained in the SQAPM. {{Design Acceptance Criteria}}
1k6. The STP is developed for the GENE DPS software projects.	Inspection of the STP for the GENE DPS software projects will be performed. {{Design Acceptance Criteria}}	The STP for GENE DPS software projects complies with the criteria contained in the SQAPM. {{Design Acceptance Criteria}}

Table 3.2-1
ITAAC For Software Development

Design Commitment	Inspections, Tests, Analyses	Acceptance Criteria
1k7. The STP is developed for the PIP hardware and software projects.	Inspection of the STP for the PIP software projects will be performed. {{Design Acceptance Criteria}}	The STP for PIP software projects complies with the criteria contained in the SQAPM. {{Design Acceptance Criteria}}
1k8. The STP is developed for the HP CRD Isolation Bypass Function hardware and software projects.	Inspection of the STP for the HP CRD Isolation Bypass Function software projects will be performed. {{Design Acceptance Criteria}}	The STP for HP CRD Isolation Bypass Function software projects complies with the criteria contained in the SQAPM. {{Design Acceptance Criteria}}
1l1. The CySP is developed for the RTIF software projects.	Inspection of the CySP for the RTIF software projects will be performed. {{Design Acceptance Criteria}}	The CySP for the RTIF software projects complies with the criteria contained in the CySPP. {{Design Acceptance Criteria}}
1l2. The CySP is developed for the NMS software projects.	Inspection of the CySP for the NMS software projects will be performed. {{Design Acceptance Criteria}}	The CySP for NMS software projects complies with the criteria contained in the CySPP. {{Design Acceptance Criteria}}
1l3. The CySP is developed for the SSLC/ESF software projects.	Inspection of the CySP for the SSLC/ESF software projects will be performed. {{Design Acceptance Criteria}}	The CySP for SSLC/ESF software projects complies with the criteria contained in the CySPP. {{Design Acceptance Criteria}}

Table 3.2-1
ITAAC For Software Development

Design Commitment	Inspections, Tests, Analyses	Acceptance Criteria
114. The CySP is developed for the ATWS/SLC software projects.	Inspection of the CySP for the ATWS/SLC software projects will be performed. {{Design Acceptance Criteria}}	The CySP for ATWS/SLC software projects complies with the criteria contained in the CySPP. {{Design Acceptance Criteria}}
115. The CySP is developed for the VBIF software projects.	Inspection of the CySP for the VBIF software projects will be performed. {{Design Acceptance Criteria}}	The CySP for VBIF software projects complies with the criteria contained in the CySPP. {{Design Acceptance Criteria}}
116. The CySP is developed for the GENE DPS software projects.	Inspection of the CySP for the GENE DPS software projects will be performed. {{Design Acceptance Criteria}}	The CySP for GENE DPS software projects complies with the criteria contained in the CySPP. {{Design Acceptance Criteria}}
117. The CySP is developed for the PIP software projects.	Inspection of the CySP for the PIP software projects will be performed. {{Design Acceptance Criteria}}	The CySP for PIP software projects complies with the criteria contained in the CySPP. {{Design Acceptance Criteria}}
118. The CySP is developed for the HP CRD Isolation Bypass Function software projects.	Inspection of the CySP for the HP CRD Isolation Bypass Function software projects will be performed. {{Design Acceptance Criteria}}	The CySP for HP CRD Isolation Bypass Function software projects complies with the criteria contained in the CySPP. {{Design Acceptance Criteria}}

Table 3.2-1
ITAAC For Software Development

Design Commitment	Inspections, Tests, Analyses	Acceptance Criteria
2a1. The planning phase activities detailed in the RTIF software plans and CySP are completed for the RTIF software projects.	The planning phase outputs are inspected and analyzed for the RTIF software projects. {{Design Acceptance Criteria}}	Planning Phase Summary BRR(s) exist and conclude that the RTIF software projects planning phase activities were performed in compliance with the RTIF software plans and CySP as derived from SMPM, SQAPM, and CySPP. {{Design Acceptance Criteria}}
2a2. The planning phase activities detailed in the NMS software plans and CySP are completed for the NMS software projects.	The planning phase outputs are inspected and analyzed for the NMS software projects. {{Design Acceptance Criteria}}	Planning Phase Summary BRR(s) exist and conclude that the NMS software projects planning phase activities were performed in compliance with the NMS software plans and CySP as derived from SMPM, SQAPM, and CySPP. {{Design Acceptance Criteria}}
2a3. The planning phase activities detailed in the SSLC/ESF software plans and CySP are completed for the SSLC/ESF software projects.	The planning phase outputs are inspected and analyzed for the SSLC/ESF software projects. {{Design Acceptance Criteria}}	Planning Phase Summary BRR(s) exist and conclude that the SSLC/ESF software projects planning phase activities were performed in compliance with the SSLC/ESF software plans and CySP as derived from SMPM, SQAPM, and CySPP. {{Design Acceptance Criteria}}

Table 3.2-1
ITAAC For Software Development

Design Commitment	Inspections, Tests, Analyses	Acceptance Criteria
2a4. The planning phase activities detailed in the ATWS/SLC software plans and CySP are completed for the ATWS/SLC software projects.	The planning phase outputs are inspected and analyzed for the ATWS/SLC software projects. {{Design Acceptance Criteria}}	Planning Phase Summary BRR(s) exist and conclude that the ATWS/SLC software projects planning phase activities were performed in compliance with the ATWS/SLC software plans and CySP as derived from SMPM, SQAPM, and CySPP. {{Design Acceptance Criteria}}
2a5. The planning phase activities detailed in the VBIF software plans and CySP are completed for the VBIF software projects.	The planning phase outputs are inspected and analyzed for the VBIF software projects. {{Design Acceptance Criteria}}	Planning Phase Summary BRR(s) exist and conclude that the VBIF software projects planning phase activities were performed in compliance with the VBIF software plans and CySP as derived from SMPM, SQAPM, and CySPP. {{Design Acceptance Criteria}}
2a6. The planning phase activities detailed in the GENE DPS software plans and CySP are completed for the GENE DPS software projects.	The planning phase outputs are inspected and analyzed for the GENE DPS software projects. {{Design Acceptance Criteria}}	Planning Phase Summary BRR(s) exist and conclude that the GENE DPS software projects planning phase activities were performed in compliance with the GENE DPS software plans and CySP as derived from SMPM, SQAPM, and CySPP. {{Design Acceptance Criteria}}

Table 3.2-1
ITAAC For Software Development

Design Commitment	Inspections, Tests, Analyses	Acceptance Criteria
2a7. The planning phase activities detailed in the PIP software plans and CySP are completed for the PIP software projects.	The planning phase outputs are inspected and analyzed for the PIP software projects. {{Design Acceptance Criteria}}	Planning Phase Summary BRR(s) exist and conclude that the PIP software projects planning phase activities were performed in compliance with the PIP software plans and CySP as derived from SMPM, SQAPM, and CySPP. {{Design Acceptance Criteria}}
2a8. The planning phase activities detailed in the HP CRD Isolation Bypass Function software plans and CySP are completed for the HP CRD Isolation Bypass Function software projects.	The planning phase outputs are inspected and analyzed for the HP CRD Isolation Bypass Function software projects. {{Design Acceptance Criteria}}	Planning Phase Summary BRR(s) exist and conclude that the HP CRD Isolation Bypass Function software projects planning phase activities were performed in compliance with the HP CRD Isolation Bypass Function software plans and CySP as derived from SMPM, SQAPM, and CySPP. {{Design Acceptance Criteria}}
2b1. The requirements phase activities detailed in the RTIF software plans and CySP are completed for the RTIF software projects.	The requirements phase outputs are inspected and analyzed for the RTIF software projects. {{Design Acceptance Criteria}}	Requirements Phase Summary BRR(s) exist and conclude that the RTIF software projects requirements phase activities were performed in compliance with the RTIF software plans and CySP as derived from SMPM, SQAPM, and CySPP. {{Design Acceptance Criteria}}

Table 3.2-1
ITAAC For Software Development

Design Commitment	Inspections, Tests, Analyses	Acceptance Criteria
2b2. The requirements phase activities detailed in the NMS software plans and CySP are completed for the NMS software projects.	The requirements phase outputs are inspected and analyzed for the NMS software projects. {{Design Acceptance Criteria}}	Requirements Phase Summary BRR(s) exist and conclude that the NMS software projects requirements phase activities were performed in compliance with the NMS software plans and CySP as derived from SMPM, SQAPM, and CySPP. {{Design Acceptance Criteria}}
2b3. The requirements phase activities detailed in the SSLC/ESF software plans and CySP are completed for the SSLC/ESF software projects.	The requirements phase outputs are inspected and analyzed for the SSLC/ESF software projects. {{Design Acceptance Criteria}}	Requirements Phase Summary BRR(s) exist and conclude that the SSLC/ESF software projects requirements phase activities were performed in compliance with the SSLC/ESF software plans and CySP as derived from SMPM, SQAPM, and CySPP. {{Design Acceptance Criteria}}
2b4. The requirements phase activities detailed in the ATWS/SLC software plans and CySP are completed for the ATWS/SLC software projects.	The requirements phase outputs are inspected and analyzed for the ATWS/SLC software projects. {{Design Acceptance Criteria}}	Requirements Phase Summary BRR(s) exist and conclude that the ATWS/SLC software projects requirements phase activities were performed in compliance with the ATWS/SLC software plans and CySP as derived from SMPM, SQAPM, and CySPP. {{Design Acceptance Criteria}}

Table 3.2-1
ITAAC For Software Development

Design Commitment	Inspections, Tests, Analyses	Acceptance Criteria
2b5. The requirements phase activities detailed in the VBIF software plans and CySP are completed for the VBIF software projects.	The requirements phase outputs are inspected and analyzed for the VBIF software projects. {{Design Acceptance Criteria}}	Requirements Phase Summary BRR(s) exist and conclude that the VBIF software projects requirements phase activities were performed in compliance with the VBIF software plans and CySP as derived from SMPM, SQAPM, and CySPP. {{Design Acceptance Criteria}}
2b6. The requirements phase activities detailed in the GENE DPS software plans and CySP are completed for the GENE DPS software projects.	The requirements phase outputs are inspected and analyzed for the GENE DPS software projects. {{Design Acceptance Criteria}}	Requirements Phase Summary BRR(s) exist and conclude that the GENE DPS software projects requirements phase activities were performed in compliance with the GENE DPS software plans and CySP as derived from SMPM, SQAPM, and CySPP. {{Design Acceptance Criteria}}
2b7. The requirements phase activities detailed in the PIP software plans and CySP are completed for the PIP software projects.	The requirements phase outputs are inspected and analyzed for the PIP software projects. {{Design Acceptance Criteria}}	Requirements Phase Summary BRR(s) exist and conclude that the PIP software projects requirements phase activities were performed in compliance with the PIP software plans and CySP as derived from SMPM, SQAPM, and CySPP. {{Design Acceptance Criteria}}

Table 3.2-1
ITAAC For Software Development

Design Commitment	Inspections, Tests, Analyses	Acceptance Criteria
2b8. The requirements phase activities detailed in the HP CRD Isolation Bypass Function software plans and CySP are completed for the HP CRD Isolation Bypass Function software projects.	The requirements phase outputs are inspected and analyzed for the HP CRD Isolation Bypass Function software projects. {{Design Acceptance Criteria}}	Requirements Phase Summary BRR(s) exist and conclude that the HP CRD Isolation Bypass Function software projects requirements phase activities were performed in compliance with the HP CRD Isolation Bypass Function software plans and CySP as derived from SMPM, SQAPM, and CySPP. {{Design Acceptance Criteria}}
2c1. The design phase activities detailed in the RTIF software plans and CySP are completed for the RTIF software projects.	The design phase outputs are inspected and analyzed for the RTIF software projects. {{Design Acceptance Criteria}}	Design Phase Summary BRR(s) exist and conclude that the RTIF software projects design phase activities were performed in compliance with the RTIF software plans and CySP as derived from SMPM, SQAPM, and CySPP. {{Design Acceptance Criteria}}
2c2. The design phase activities detailed in the NMS software plans and CySP are completed for the NMS software projects.	The design phase outputs are inspected and analyzed for the NMS software projects. {{Design Acceptance Criteria}}	Design Phase Summary BRR(s) exist and conclude that the NMS software projects design phase activities were performed in compliance with the NMS software plans and CySP as derived from SMPM, SQAPM, and CySPP. {{Design Acceptance Criteria}}

Table 3.2-1
ITAAC For Software Development

Design Commitment	Inspections, Tests, Analyses	Acceptance Criteria
2c3. The design phase activities detailed in the SSLC/ESF software plans and CySP are completed for the SSLC/ESF software projects.	The design phase outputs are inspected and analyzed for the SSLC/ESF software projects. {{Design Acceptance Criteria}}	Design Phase Summary BRR(s) exist and conclude that the SSLC/ESF software projects design phase activities were performed in compliance with the SSLC/ESF software plans and CySP as derived from SMPM, SQAPM, and CySPP. {{Design Acceptance Criteria}}
2c4. The design phase activities detailed in the ATWS/SLC software plans and CySP are completed for the ATWS/SLC software projects.	The design phase outputs are inspected and analyzed for the ATWS/SLC software projects. {{Design Acceptance Criteria}}	Design Phase Summary BRR(s) exist and conclude that the ATWS/SLC software projects design phase activities were performed in compliance with the ATWS/SLC software plans and CySP as derived from SMPM, SQAPM, and CySPP. {{Design Acceptance Criteria}}
2c5. The design phase activities detailed in the VBIF software plans and CySP are completed for the VBIF software projects.	The design phase outputs are inspected and analyzed for the VBIF software projects. {{Design Acceptance Criteria}}	Design Phase Summary BRR(s) exist and conclude that the VBIF software projects design phase activities were performed in compliance with the VBIF software plans and CySP as derived from SMPM, SQAPM, and CySPP. {{Design Acceptance Criteria}}

Table 3.2-1
ITAAC For Software Development

Design Commitment	Inspections, Tests, Analyses	Acceptance Criteria
2c6. The design phase activities detailed in the GENE DPS software plans and CySP are completed for the GENE DPS software projects.	The design phase outputs are inspected and analyzed for the GENE DPS software projects. {{Design Acceptance Criteria}}	Design Phase Summary BRR(s) exist and conclude that the GENE DPS software projects design phase activities were performed in compliance with the GENE DPS software plans and CySP as derived from SMPM, SQAPM, and CySPP. {{Design Acceptance Criteria}}
2c7. The design phase activities detailed in the PIP software plans and CySP are completed for the PIP software projects.	The design phase outputs are inspected and analyzed for the PIP software projects. {{Design Acceptance Criteria}}	Design Phase Summary BRR(s) exist and conclude that the PIP software projects design phase activities were performed in compliance with the PIP software plans and CySP as derived from SMPM, SQAPM, and CySPP. {{Design Acceptance Criteria}}
2c8. The design phase activities detailed in the HP CRD Isolation Bypass Function software plans and CySP are completed for the HP CRD Isolation Bypass Function software projects.	The design phase outputs are inspected and analyzed for the HP CRD Isolation Bypass Function software projects. {{Design Acceptance Criteria}}	Design Phase Summary BRR(s) exist and conclude that the HP CRD Isolation Bypass Function software projects design phase activities were performed in compliance with the HP CRD Isolation Bypass Function software plans and CySP as derived from SMPM, SQAPM, and CySPP. {{Design Acceptance Criteria}}

Table 3.2-1
ITAAC For Software Development

Design Commitment	Inspections, Tests, Analyses	Acceptance Criteria
2d1. The implementation phase activities detailed in the RTIF software plans and CySP are completed for the RTIF software projects.	The implementation phase outputs are inspected and analyzed for the RTIF software projects.	Implementation Phase Summary BRR(s) exist and conclude that the RTIF software projects implementation phase activities were performed in compliance with the RTIF software plans and CySP as derived from SMPM, SQAPM, and CySPP.
2d2. The implementation phase activities detailed in the NMS software plans and CySP are completed for the NMS software projects.	The implementation phase outputs are inspected and analyzed for the NMS software projects.	Implementation Phase Summary BRR(s) exist and conclude that the NMS software projects implementation phase activities were performed in compliance with the NMS software plans and CySP as derived from SMPM, SQAPM, and CySPP.
2d3. The implementation phase activities detailed in the SSLC/ESF software plans and CySP are completed for the SSLC/ESF software projects.	The implementation phase outputs are inspected and analyzed for the SSLC/ESF software projects.	Implementation Phase Summary BRR(s) exist and conclude that the SSLC/ESF software projects implementation phase activities were performed in compliance with the SSLC/ESF software plans and CySP as derived from SMPM, SQAPM, and CySPP.

Table 3.2-1
ITAAC For Software Development

Design Commitment	Inspections, Tests, Analyses	Acceptance Criteria
2d4. The implementation phase activities detailed in the ATWS/SLC software plans and CySP are completed for the ATWS/SLC software projects.	The implementation phase outputs are inspected and analyzed for the ATWS/SLC software projects.	Implementation Phase Summary BRR(s) exist and conclude that the ATWS/SLC software projects implementation phase activities were performed in compliance with the ATWS/SLC software plans and CySP as derived from SMPM, SQAPM, and CySPP.
2d5. The implementation phase activities detailed in the VBIF software plans and CySP are completed for the VBIF software projects.	The implementation phase outputs are inspected and analyzed for the VBIF software projects.	Implementation Phase Summary BRR(s) exist and conclude that the VBIF software projects implementation phase activities were performed in compliance with the VBIF software plans and CySP as derived from SMPM, SQAPM, and CySPP.
2d6. The implementation phase activities detailed in the GENE DPS software plans and CySP are completed for the GENE DPS software projects.	The implementation phase outputs are inspected and analyzed for the GENE DPS software projects.	Implementation Phase Summary BRR(s) exist and conclude that the GENE DPS software projects implementation phase activities were performed in compliance with the GENE DPS software plans and CySP as derived from SMPM, SQAPM, and CySPP.

Table 3.2-1
ITAAC For Software Development

Design Commitment	Inspections, Tests, Analyses	Acceptance Criteria
2d7. The implementation phase activities detailed in the PIP software plans and CySP are completed for the PIP software projects.	The implementation phase outputs are inspected and analyzed for the PIP software projects.	Implementation Phase Summary BRR(s) exist and conclude that the PIP software projects implementation phase activities were performed in compliance with the PIP software plans and CySP as derived from SMPM, SQAPM, and CySPP.
2d8. The implementation phase activities detailed in the HP CRD Isolation Bypass Function software plans and CySP are completed for the HP CRD Isolation Bypass Function software projects.	The implementation phase outputs are inspected and analyzed for the HP CRD Isolation Bypass Function software projects.	Implementation Phase Summary BRR(s) exist and conclude that the HP CRD Isolation Bypass Function software projects implementation phase activities were performed in compliance with the HP CRD Isolation Bypass Function software plans and CySP as derived from SMPM, SQAPM, and CySPP.
2e1. The test phase activities detailed in the RTIF software plans and CySP are completed for the RTIF software projects.	The test phase outputs are inspected and analyzed for the RTIF software projects.	Test Phase Summary BRR(s) exist and conclude that the RTIF software projects test phase activities were performed in compliance with the RTIF software plans and CySP as derived from SMPM, SQAPM, and CySPP.

Table 3.2-1
ITAAC For Software Development

Design Commitment	Inspections, Tests, Analyses	Acceptance Criteria
2e2. The test phase activities detailed in the NMS software plans and CySP are completed for the NMS software projects.	The test phase outputs are inspected and analyzed for the NMS software projects.	Test Phase Summary BRR(s) exist and conclude that the NMS software projects test phase activities were performed in compliance with the NMS software plans and CySP as derived from SMPM, SQAPM, and CySPP.
2e3. The test phase activities detailed in the SSLC/ESF software plans and CySP are completed for the SSLC/ESF software projects.	The test phase outputs are inspected and analyzed for the SSLC/ESF software projects.	Test Phase Summary BRR(s) exist and conclude that the SSLC/ESF software projects test phase activities were performed in compliance with the SSLC/ESF software plans and CySP as derived from SMPM, SQAPM, and CySPP.
2e4. The test phase activities detailed in the ATWS/SLC software plans and CySP are completed for the ATWS/SLC software projects.	The test phase outputs are inspected and analyzed for the ATWS/SLC software projects.	Test Phase Summary BRR(s) exist and conclude that the ATWS/SLC software projects test phase activities were performed in compliance with the ATWS/SLC software plans and CySP as derived from SMPM, SQAPM, and CySPP.

Table 3.2-1
ITAAC For Software Development

Design Commitment	Inspections, Tests, Analyses	Acceptance Criteria
2e5. The test phase activities detailed in the VBIF software plans and CySP are completed for the VBIF software projects.	The test phase outputs are inspected and analyzed for the VBIF software projects.	Test Phase Summary BRR(s) exist and conclude that the VBIF software projects test phase activities were performed in compliance with the VBIF software plans and CySP as derived from SMPM, SQAPM, and CySPP.
2e6. The test phase activities detailed in the GENE DPS software plans and CySP are completed for the GENE DPS software projects.	The test phase outputs are inspected and analyzed for the GENE DPS software projects.	Test Phase Summary BRR(s) exist and conclude that the GENE DPS software projects test phase activities were performed in compliance with the GENE DPS software plans and CySP as derived from SMPM, SQAPM, and CySPP.
2e7. The test phase activities detailed in the PIP software plans and CySP are completed for the PIP software projects.	The test phase outputs are inspected and analyzed for the PIP software projects.	Test Phase Summary BRR(s) exist and conclude that the PIP software projects test phase activities were performed in compliance with the PIP software plans and CySP as derived from SMPM, SQAPM, and CySPP.

Table 3.2-1
ITAAC For Software Development

Design Commitment	Inspections, Tests, Analyses	Acceptance Criteria
2e8. The test phase activities detailed in the HP CRD Isolation Bypass Function software plans and CySP are completed for the HP CRD Isolation Bypass Function software projects.	The test phase outputs are inspected and analyzed for the HP CRD Isolation Bypass Function software projects.	Test Phase Summary BRR(s) exist and conclude that the HP CRD Isolation Bypass Function software projects test phase activities were performed in compliance with the HP CRD Isolation Bypass Function software plans and CySP as derived from SMPM, SQAPM, and CySPP.
3a1. The installation phase activities detailed in the RTIF software plans and CySP are completed for the RTIF software projects.	The installation phase outputs for the RTIF software projects, including RTIF FAT and RTIF Cyber Security FAT, are inspected and analyzed .	Installation Phase Summary BRR(s) exist and conclude that the RTIF software projects installation phase activities were performed in compliance with the RTIF software plans and CySP as derived from SMPM, SQAPM, and CySPP.
3a2. The RTIF software projects performs as designed.	FAT is performed on the RTIF software projects.	RTIF FAT report(s) exist and concludes that the RTIF software projects is in compliance with the RTIF software plans as derived from the SMPM, SQAPM, and CySPP.
3a3. The RTIF software projects is cyber secure.	A cyber security FAT will be performed for the RTIF software projects.	RTIF cyber security FAT report(s) exist and conclude that the RTIF software projects is in compliance with the RTIF cyber security program requirements as derived from the SMPM, SQAPM, and CySPP.

Table 3.2-1
ITAAC For Software Development

Design Commitment	Inspections, Tests, Analyses	Acceptance Criteria
3b1. The installation phase activities detailed in the NMS software plans and CySP are completed for the NMS software projects.	The installation phase outputs for the NMS software projects, including NMS FAT and NMS Cyber Security FAT, are inspected and analyzed.	Installation Phase Summary BRR(s) exists and concludes that the NMS software projects installation phase activities were performed in compliance with the NMS software plans and CySP as derived from SMPM, SQAPM, and CySPP.
3b2. The NMS software projects performs as designed.	FAT is performed on the NMS software projects.	NMS FAT report(s) exist and conclude that the NMS software projects is in compliance with the NMS software plans as derived from the SMPM, SQAPM, and CySPP.
3b3. The NMS software projects is cyber secure.	A cyber security FAT will be performed for the NMS software projects.	NMS cyber security FAT report(s) exist and conclude that the NMS software projects is in compliance with the NMS cyber security program requirements as derived from the SMPM, SQAPM, and CySPP.
3c1. The installation phase activities detailed in the SSLC/ESF software plans and CySP are completed for the SSLC/ESF software projects.	The installation phase outputs for the SSLC/ESF software projects, including SSLC/ESF FAT and SSLC/ESF Cyber Security FAT, are inspected and analyzed.	Installation Phase Summary BRR(s) exist and conclude that the SSLC/ESF software projects installation phase activities were performed in compliance with the SSLC/ESF software plans and CySP as derived from SMPM, SQAPM, and CySPP.

Table 3.2-1
ITAAC For Software Development

Design Commitment	Inspections, Tests, Analyses	Acceptance Criteria
3c2. The SSLC/ESF software projects performs as designed.	FAT is performed on the SSLC/ESF software projects.	SSLC/ESF FAT report(s) exist and conclude that the SSLC/ESF software projects is in compliance with the SSLC/ESF software plans as derived from the SMPM, SQAPM, and CySPP.
3c3. The SSLC/ESF software projects is cyber secure.	A cyber security FAT will be performed for the SSLC/ESF software projects.	SSLC/ESF cyber security FAT report(s) exist and conclude that the SSLC/ESF software projects is in compliance with the SSLC/ESF CySP as derived from the SMPM, SQAPM, and CySPP.
3d1. The installation phase activities detailed in the ATWS/SLC software plans and CySP are completed for the ATWS/SLC software projects.	The installation phase outputs for the ATWS/SLC software projects, including ATWS/SLC FAT and ATWS/SLC Cyber Security FAT, are inspected and analyzed.	Installation Phase Summary BRR(s) exist and conclude that the ATWS/SLC software projects installation phase activities were performed in compliance with the ATWS/SLC software plans and CySP as derived from SMPM, SQAPM, and CySPP.
3d2. The ATWS/SLC software projects performs as designed.	FAT is performed on the ATWS/SLC software projects.	ATWS/SLC FAT report exist and conclude that the ATWS/SLC software projects is in compliance with the ATWS/SLC software plans as derived from the SMPM, SQAPM, and CySPP.

Table 3.2-1
ITAAC For Software Development

Design Commitment	Inspections, Tests, Analyses	Acceptance Criteria
3d3. The ATWS/SLC software projects is cyber secure.	A cyber security FAT will be performed for the ATWS/SLC software projects.	ATWS/SLC cyber security FAT report(s) exist and conclude that the ATWS/SLC software projects is in compliance with the ATWS/SLC CySP as derived from the SMPM, SQAPM, and CySPP.
3e1. The installation phase activities detailed in the VBIF software plans and CySP are completed for the VBIF software projects.	The installation phase outputs for the VBIF software projects, including VBIF FAT and VBIF Cyber Security FAT, are inspected and analyzed.	Installation Phase Summary BRR(s) exist and conclude that the VBIF software projects installation phase activities were performed in compliance with the VBIF software plans and CySP as derived from SMPM, SQAPM, and CySPP.
3e2. The VBIF software projects performs as designed.	FAT is performed on the VBIF software projects.	VBIF FAT report(s) exist and conclude that the VBIF software projects is in compliance with the VBIF software plans as derived from the SMPM, SQAPM, and CySPP.
3e3. The VBIF software projects is cyber secure.	A cyber security FAT will be performed for the VBIF software projects.	VBIF cyber security FAT report(s) exist and conclude that the VBIF software projects is in compliance with the VBIF CySP as derived from the SMPM, SQAPM, and CySPP.

Table 3.2-1
ITAAC For Software Development

Design Commitment	Inspections, Tests, Analyses	Acceptance Criteria
3f1. The installation phase activities detailed in the GENE DPS software plans and CySP are completed for the GENE DPS software projects.	The installation phase outputs for the GENE DPS software projects, including GENE DPS FAT and GENE DPS Cyber Security FAT, are inspected and analyzed.	Installation Phase Summary BRR(s) exist and conclude that the GENE DPS software projects installation phase activities were performed in compliance with the GENE DPS software plans and CySP as derived from SMPM, SQAPM, and CySPP.
3f2. The GENE DPS software projects performs as designed.	FAT is performed on the GENE DPS software projects.	GENE DPS FAT report(s) exist and conclude that the GENE DPS software projects is in compliance with the GENE DPS software plans as derived from the SMPM, SQAPM, and CySPP.
3f3. The GENE DPS software projects is cyber secure.	A cyber security FAT will be performed for the GENE DPS software projects.	GENE DPS cyber security FAT report(s) exist and conclude that the GENE DPS software projects is in compliance with the GENE DPS CySP as derived from the SMPM, SQAPM, and CySPP.
3g1. The installation phase activities detailed in the PIP software plans and CySP are completed for the PIP software projects.	The installation phase outputs for the PIP software projects, including PIP FAT and PIP Cyber Security FAT, are inspected and analyzed.	Installation Phase Summary BRR(s) exist and conclude that the PIP software projects installation phase activities were performed in compliance with the PIP software plans and CySP as derived from SMPM, SQAPM, and CySPP.

Table 3.2-1
ITAAC For Software Development

Design Commitment	Inspections, Tests, Analyses	Acceptance Criteria
3g2. The PIP software projects performs as designed.	FAT is performed on the PIP software projects.	PIP FAT report(s) exist and conclude that the PIP software projects is in compliance with the PIP software plans as derived from the SMPM, SQAPM, and CySPP.
3g3. The PIP software projects is cyber secure.	A cyber security FAT will be performed for the PIP software projects.	PIP cyber security FAT report(s) exist and conclude that the PIP software projects is in compliance with the PIP CySP as derived from the SMPM, SQAPM, and CySPP.
3h1. The installation phase activities detailed in the HP CRD Isolation Bypass Function software plans and CySP are completed for the HP CRD Isolation Bypass Function software projects.	The installation phase outputs for the HP CRD Isolation Bypass Function software projects, including HP CRD Isolation Bypass Function FAT and HP CRD Isolation Bypass Function Cyber Security FAT, are inspected and analyzed.	Installation Phase Summary BRR(s) exist and conclude that the HP CRD Isolation Bypass Function software projects installation phase activities were performed in compliance with the HP CRD Isolation Bypass Function software plans and CySP as derived from SMPM, SQAPM, and CySPP.
3h2. The HP CRD Isolation Bypass Function software projects performs as designed.	FAT is performed on the HP CRD Isolation Bypass Function software projects.	HP CRD Isolation Bypass Function FAT report(s) exist and conclude that the HP CRD Isolation Bypass Function software projects is in compliance with the HP CRD Isolation Bypass Function software plans as derived from the SMPM, SQAPM, and CySPP.

Table 3.2-1
ITAAC For Software Development

Design Commitment	Inspections, Tests, Analyses	Acceptance Criteria
3h3. The HP CRD Isolation Bypass Function software projects is cyber secure.	A cyber security FAT will be performed for the HP CRD Isolation Bypass Function software projects.	HP CRD Isolation Bypass Function cyber security FAT report(s) exist and conclude that the HP CRD Isolation Bypass Function software projects is in compliance with the HP CRD Isolation Bypass Function CySP as derived from the SMPM, SQAPM, and CySPP.
3i. The complete ESBWR instrumentation and control systems with sensors and actuators is capable of operating as designed.	An overlapping and encompassing SAT is performed on the as-built platforms and network segments.	The Installation Phase Summary BRR for the complete ESBWR instrumentation and control system SAT exists and concludes that the complete ESBWR instrumentation and control system with sensors and actuators is capable of operating as designed and is in compliance with the software projects plans and CySP as derived from the SMPM, SQAPM and CySPP.
3j1. The RTIF software projects performs as designed.	A RTIF software projects SAT is performed.	RTIF cyber security SAT report(s) exist and conclude that the RTIF software projects is in compliance with the RTIF CySP as derived from the SMPM, SQAPM, and CySPP.

Table 3.2-1
ITAAC For Software Development

Design Commitment	Inspections, Tests, Analyses	Acceptance Criteria
3j2. The RTIF software projects is cyber secure.	A RTIF software projects cyber security SAT is performed.	RTIF cyber security SAT report(s) exist and conclude that the RTIF software projects is in compliance with the RTIF CySP as derived from the SMPM, SQAPM, and CySPP.
3k1. The NMS software projects performs as designed.	A NMS software projects SAT is performed.	NMS SAT report(s) exist and conclude that the NMS software projects is in compliance with the NMS software plans as derived from the SMPM, SQAPM, and CySPP.
3k2. The NMS software projects is cyber secure.	A NMS software projects cyber security SAT is performed.	NMS cyber security SAT report(s) exist and conclude that the NMS software projects is in compliance with the NMS CySP as derived from the SMPM, SQAPM, and CySPP.
3l1. The SSLC/ESF software projects performs as designed.	A SSLC/ESF software projects SAT is performed.	SSLC/ESF SAT report(s) exist and conclude that the SSLC/ESF software projects is in compliance with the SSLC/ESF software plans as derived from the SMPM, SQAPM, and CySPP.
3l2. The SSLC/ESF software projects is cyber secure.	A SSLC/ESF software projects cyber security SAT is performed.	SSLC/ESF cyber security SAT report(s) exist and conclude that the SSLC/ESF software projects is in compliance with the SSLC/ESF CySP as derived from the SMPM, SQAPM, and CySPP.

Table 3.2-1
ITAAC For Software Development

Design Commitment	Inspections, Tests, Analyses	Acceptance Criteria
3m1. The ATWS/SLC software projects performs as designed.	An ATWS/SLC software projects SAT is performed.	ATWS/SLC SAT report(s) exist and conclude that the ATWS/SLC software projects is in compliance with the ATWS/SLC software plans as derived from the SMPM, SQAPM, and CySPP.
3m2. The ATWS/SLC software projects is cyber secure.	An ATWS/SLC software projects cyber security SAT is performed.	ATWS/SLC cyber security SAT report(s) exist and conclude that the ATWS/SLC software projects is in compliance with the ATWS/SLC CySP as derived from the SMPM, SQAPM, and CySPP.
3n1. The VBIF software projects performs as designed.	A VBIF software projects SAT is performed.	VBIF SAT report(s) exist and conclude that the VBIF software projects is in compliance with the VBIF software plans as derived from the SMPM, SQAPM, and CySPP.
3n2. The VBIF software projects is cyber secure.	A VBIF software projects cyber security SAT is performed.	VBIF cyber security SAT report(s) exist and conclude that the VBIF software projects is in compliance with the VBIF CySP as derived from the SMPM, SQAPM, and CySPP.
3o1. The GENE DPS software projects performs as designed.	A GENE DPS software projects SAT is performed.	GENE DPS SAT report(s) exist and conclude that the GENE DPS software projects is in compliance with the GENE DPS software plans as derived from the SMPM, SQAPM, and CySPP.

Table 3.2-1
ITAAC For Software Development

Design Commitment	Inspections, Tests, Analyses	Acceptance Criteria
3o2. The GENE DPS software projects is cyber secure.	A GENE DPS software projects cyber security SAT is performed.	GENE DPS cyber security SAT report(s) exist and conclude that the GENE DPS software projects is in compliance with the GENE DPS CySP as derived from the SMPM, SQAPM, and CySPP.
3p1. The PIP software projects performs as designed.	A PIP software projects SAT is performed.	PIP SAT report(s) exist and conclude that the PIP software projects is in compliance with the PIP software plans as derived from the SMPM, SQAPM, and CySPP.
3p2. The PIP software projects is cyber secure.	A PIP software projects cyber security SAT is performed.	PIP cyber security SAT report(s) exist and conclude that the PIP software projects is in compliance with the PIP CySP as derived from the SMPM, SQAPM, and CySPP.
3q1. The HP CRD Isolation Bypass Function software projects performs as designed.	A HP CRD Isolation Bypass Function software projects SAT is performed.	HP CRD Isolation Bypass Function SAT report(s) exist and conclude that the HP CRD Isolation Bypass Function software projects is in compliance with the HP CRD Isolation Bypass Function software plans as derived from the SMPM, SQAPM, and CySPP.

Table 3.2-1
ITAAC For Software Development

Design Commitment	Inspections, Tests, Analyses	Acceptance Criteria
3q2. The HP CRD Isolation Bypass Function software projects is cyber secure.	A HP CRD Isolation Bypass Function software projects cyber security SAT is performed.	HP CRD Isolation Bypass Function cyber security SAT report(s) exist and conclude that the HP CRD Isolation Bypass Function software projects is in compliance with the HP CRD Isolation Bypass Function CySP as derived from the SMPM, SQAPM, and CySPP.

3.3 HUMAN FACTORS ENGINEERING

Design Description

The Human Factors Engineering (HFE) design process represents a comprehensive, synergistic, iterative design approach for the development of human-centered control and information infrastructure for the ESBWR.

The general objectives of the program can be stated in "human-centered" terms, which, as the HFE program develops, is refined and used as a basis for HFE planning, test and evaluation activities. HFE design goals include ensuring that:

- Personnel tasks can be accomplished within time and performance criteria;
- Human-System Interfaces (HSIs), procedures, staffing/qualifications, training and management and organizational variables support a high degree of operating crew situation awareness;
- Allocation of functions accommodates human capabilities and limitations;
- Operator vigilance is maintained;
- Acceptable operator workload is met;
- Operator interfaces contribute to an error-free environment; and
- Error detection and recovery capabilities are provided.

The elements of the ESBWR HFE Program Management are provided in the plan entitled "Man-Machine Interface System and Human Factors Engineering Implementation Plan" (MMIS and HFE Implementation Plan). In the plan the following are described:

- HFE goals/objectives;
- A technical program to accomplish the objectives;
- The system to track HFE issues;
- The HFE design team; and
- Management and organizational structure for the technical program.

The proposed methodologies for the conducts of the HFE activities are described in separate implementation plans. The results and outcomes of the activities are summarized in individual results summary reports.

The MMIS and HFE Implementation Plan and supporting HFE activity implementation plans are submitted for NRC staff review in the pre-design project phase. The results summary reports are available for the NRC staff review, and are included in the list of items for Inspections, Tests, Analyses, and Acceptance Criteria.

The following are the HFE elements and their associated implementation plans:

(1) Operating Experience Review (OER) is performed in accordance with the ESBWR HFE Operating Experience Review Implementation Plan.

(2) Functional Requirements Analysis (FRA) is performed in accordance with the ESBWR HFE Functional Requirements Analysis Implementation Plan and Allocation of Functions (AOF) is performed in accordance with the ESBWR HFE Allocation of Functions Implementation Plan.

(3) Task Analysis is performed in accordance with the ESBWR HFE Task Analysis Implementation Plan.

(4) Staffing and Qualifications (S&Q) is performed in accordance with the ESBWR HFE Staffing and Qualifications Implementation Plan.

(5) Human Reliability Analysis (HRA) is performed in accordance with the ESBWR HFE Human Reliability Analysis Implementation Plan.

(6) Human-System Interface (HSI) Design is performed in accordance with the ESBWR HFE Human-System Interface Design Implementation Plan.

(7) Procedure Development is performed in accordance with the ESBWR HFE Procedure Development Implementation Plan.

(8) Training Development is performed in accordance with the ESBWR HFE Training Development Implementation Plan.

(9) Human Factors Verification and Validation (HF V&V) is performed in accordance with the ESBWR HFE Verification and Validation Implementation Plan.

(10) Design Implementation is performed in accordance with the ESBWR HFE Design Implementation Plan.

(11) The strategy for the Human Performance Monitoring (HPM) process is developed in accordance with the ESBWR HFE Human Performance Monitoring Implementation Plan.

(12) Integrated system validation scenarios are developed that incorporate detailed information related to sampling dimensions, scenario identification, scenario definition, simulation of remote actions, performance measurement characteristics, performance measurement selection, performance measurement criteria, test design, and data analysis.

A minimum inventory of human system interfaces (alarms, displays, and controls) needed to implement the plant's emergency operating procedures, carry out those human actions shown to be important from the probabilistic risk assessment, and to bring the plant to a safe condition were developed using a detailed and comprehensive task analysis process.

To identify tasks that support implementing the emergency operating procedures, the strategies and actions of the BWROG EPG/SAG, Revision 2 are compared with the ESBWR design. This comparison is a functional analysis; linking the strategy and task guidance contained in the BWROG document with the design specifics and system capabilities of the ESBWR.

Tasks that support the completion of risk-important human actions were identified through Probabilistic Risk Assessment (PRA) analysis of design basis accidents and the resulting event strategies, sequences, and actions. Any human action included in these sequences is analyzed in the context of the ESBWR plant and systems design and operating strategies to determine error probabilities and consequences. Using ranking methodologies, risk-important human actions and tasks were identified.

Analysis of plant manipulations necessary for achieving and maintaining safe, stable shutdown following design basis MCR evacuation identified tasks that must be completed at the Remote Shutdown System (RSS).

These groups of tasks are then analyzed through task analysis to identify the alarms, displays, and controls that are needed to ensure their successful completion by ESBWR operators. The resulting list of HSIs is the ESBWR minimum inventory of alarms, displays, and controls.

The results for the MCR HSIs are contained in Table 3.3-1a and the RSS HSIs are contained in Table 3.3-1b.

Inspections, Tests, Analyses, and Acceptance Criteria

Table 3.3-2 provides a definition of the inspections, test and analyses, together with associated acceptance criteria for Human Factors Engineering.

Table 3.3-1a

Minimum Inventory of MCR Alarms, Displays, and Controls

Description	Alarm	Display	Control
Reactor Power	X	X	
Reactor Pressure	X	X	
Reactor Water Level	X	X	
Containment Water Level		X	
Suppression Pool Level	X	X	
Average Drywell Temperature	X	X	
Suppression Pool Bulk Average Temperature	X	X	
Drywell Pressure	X	X	
Wetwell Pressure		X	
Containment Isolation Valves		X	X
Containment Radiation		X	
Drywell Hydrogen Concentration	X	X	
Wetwell Hydrogen Concentration	X	X	
Drywell Oxygen Concentration	X	X	
Wetwell Oxygen Concentration	X	X	
Isolation Condenser Valves		X	X
Isolation Condenser Pool Level	X	X	
Shutdown Cooling Initiation			X
Passive Containment Cooling Pool Level	X	X	
Gravity Driven Cooling Pool Level		X	
Gravity Driven Cooling Injection Valves		X	X
Gravity Driven Cooling Equalization Valves		X	X
Reactor Scram	X	X	X
Main Steam Isolation	X	X	X
Main Steam Relief Valves		X	X
Standby Liquid Control Accumulator Level		X	
Standby Liquid Control Initiation			X
Standby Liquid Control Accumulator Isolation Valves	X	X	X
Automatic Depressurization System Inhibit	X		X
Depressurization Valves		X	X
Containment High Pressure Nitrogen Status	X		
Reactor Building Area Temperature High	X		

Table 3.3-1a

Minimum Inventory of MCR Alarms, Displays, and Controls

Description	Alarm	Display	Control
Reactor Building Ventilation Exhaust Radiation High	X	X	
Reactor Building Area Radiation High	X		
Reactor Building Area Water Level High	X		
Reactor Building Ventilation Isolation		X	X

Table 3.3-1b

Minimum Inventory of RSS Alarms, Displays, and Controls

Description	Alarm	Display	Control
Reactor Pressure	X	X	
Reactor Water Level	X	X	
Isolation Condenser System	X	X	X
Isolation Condenser Pool Level	X	X	
Main Steam Isolation	X	X	X

Table 3.3-2

ITAAC For Human Factors Engineering

Design Commitment	Inspections, Tests, Analyses	Acceptance Criteria
1. Operating Experience Review (OER) is performed in accordance with the ESBWR HFE Operating Experience Review Implementation Plan.	An inspection is performed on the OER results summary report(s). {{Design Acceptance Criteria}}	A results summary report(s) exists that concludes that the OER activity was conducted in accordance with the implementation plan and contains: • The scope of the OER; • The list of sources of operating experience reviewed and summary of documented results; • List of risk-important human actions and their resolutions from predecessor plants; and • A description of the process for issue analysis, tracking, and review. {{Design Acceptance Criteria}}

Table 3.3-2

ITAAC For Human Factors Engineering

Design Commitment	Inspections, Tests, Analyses	Acceptance Criteria
2. Functional Requirements Analysis (FRA) is performed in accordance with the ESBWR HFE Functional Requirements Analysis Implementation Plan and Allocation of Functions (AOF) is performed in accordance with the ESBWR HFE Allocation of Functions Implementation Plan.	An inspection is performed on the FRA and AOF results summary report(s). {{Design Acceptance Criteria}}	A results summary report(s) exists that concludes that the FRA and AOF activities were conducted in accordance with the implementation plans and contains:

Table 3.3-2

ITAAC For Human Factors Engineering

Design Commitment	Inspections, Tests, Analyses	Acceptance Criteria
		• Scope of the FRA; • Functional hierarchy for plant safety functions including the identification of Critical Safety Functions; • Plant systems and configurations that support safety functions; • Definition of high-level plant functions, their support needs, and monitoring parameters; • Scope of AOF; • Safety function allocations.A summary of AOF results; and • A description of the process for refining and updating functional allocations. {{Design Acceptance Criteria}}

Table 3.3-2

ITAAC For Human Factors Engineering

Design Commitment	Inspections, Tests, Analyses	Acceptance Criteria
3. Task Analysis is performed in accordance with the ESBWR HFE Task Analysis Implementation Plan.	An inspection is performed on the Task Analysis results summary report(s). {{Design Acceptance Criteria}}	A results summary report(s) exists that concludes that the Task Analysis activity was conducted in accordance with the implementation plan and contains: • The scope of the Task Analysis. • A list of Task descriptions. • A description of the process for documenting and retaining task analysis results. • Examples of detailed task analysis results. {{Design Acceptance Criteria}}
4. Staffing and Qualifications (S&Q) is performed in accordance with the ESBWR HFE Staffing and Qualifications Implementation Plan.	i. An inspection is performed on the S&Q results summary report(s). {{Design Acceptance Criteria}}	i. A results summary report(s) exists that concludes that the S&Q design activity was conducted in accordance with the implementation plan and contains: • The scope of the S&Q activity. • A summary of design requirements and inputs to the S&Q. {{Design Acceptance Criteria}}

Table 3.3-2

ITAAC For Human Factors Engineering

Design Commitment	Inspections, Tests, Analyses	Acceptance Criteria
	ii. An inspection is performed on the final S&Q results summary report(s).	ii. A final results summary report(s) exists that concludes that the S&Q process was conducted in accordance with the implementation plan and contains: • Final staffing levels and qualifications. • The basis for the S&Q concluding that issues and concerns raised in other HFE activities are addressed.
5. Human Reliability Analysis (HRA) is performed in accordance with the ESBWR HFE Human Reliability Analysis Implementation Plan.	i. An inspection is performed on the HRA results summary report(s). {{Design Acceptance Criteria}}	i. A results summary report(s) exists that concludes that the HRA design was conducted in accordance with the implementation plan and contains: • The scope of the HRA. • A list of risk-important human actions input to Human Factors activities. {{Design Acceptance Criteria}}

Table 3.3-2

ITAAC For Human Factors Engineering

Design Commitment	Inspections, Tests, Analyses	Acceptance Criteria
	ii. An inspection is performed on the final HRA results summary report(s).	ii. A final results summary report(s) exists that concludes that the HRA process was conducted in accordance with the implementation plan and contains: • A list of potentially risk-important human actions, human interactions, and operational failure events and a summary of how these basic events and their associated tasks, and scenarios are addressed during the various phases of the design process. • A summary that demonstrates how risk management actions taken in the design keep the potentially risk-important human interactions as low as practical. • A discussion of the validation of HRA assumptions.

Table 3.3-2

ITAAC For Human Factors Engineering

Design Commitment	Inspections, Tests, Analyses	Acceptance Criteria
6. Human System Interface (HSI) Design is performed in accordance with the ESBWR HFE Human System Interface Design Implementation Plan.	i. An inspection is performed on the HSI Design results summary report(s). {{Design Acceptance Criteria}}	i. A results summary report(s) exists that concludes that the HSI Design specification was conducted in accordance with the implementation plan and contains: • The scope of the HSI Design. • A description of the concept of operations for HSI Design. • A list of HFE standards and guideline documents used in the activity. • Descriptions of the Style Guide and design specifications for HSI design. • A list of accident monitoring instruments that comply with RG 1.97 and supporting analysis. • A description of the functional requirement specification for HSIs. {{Design Acceptance Criteria}}

Table 3.3-2

ITAAC For Human Factors Engineering

Design Commitment	Inspections, Tests, Analyses	Acceptance Criteria
	ii. An inspection is performed on the final HSI Design results summary report(s).	ii. A final results summary report(s) exists that concludes that the HSI Design process was conducted in accordance with the implementation plan and contains: • A summary of the methods used for the evaluation and verification of the HSI. • A description of the final inventory of HSI including alarms, information displays, and controls. • The results of the verification concluding that all MCR and RSS minimum inventory HSIs described in Tables 3.3-1a and 3.3-1b are incorporated into the final inventory of HSIs.

Table 3.3-2

ITAAC For Human Factors Engineering

Design Commitment	Inspections, Tests, Analyses	Acceptance Criteria
7. Procedure Development is performed in accordance with the ESBWR HFE Procedure Development Implementation Plan.	i. An inspection is performed on the Procedure Development results summary report(s). {{Design Acceptance Criteria}}	i. A results summary report(s) exists that concludes that the Procedure Development design was conducted in accordance with the implementation plan and contains: • The scope of the procedures development process. • A list of writer's guides for procedure development. • A summary of design requirements and inputs to procedure development. {{Design Acceptance Criteria}}

Table 3.3-2

ITAAC For Human Factors Engineering

Design Commitment	Inspections, Tests, Analyses	Acceptance Criteria
	ii. An inspection is performed on the final Procedure Development results summary report(s).	ii. A final results summary report(s) exists that concludes that the Procedure Development process was conducted in accordance with the implementation plan and contains: • A description of the plant procedures derived from ESBWR EPGs. • A list of procedures and procedure support equipment developed. • A description of how procedures are utilized, including operator access and use of hard copy and computer based procedures. • A description of the plant procedures derived from the ESBWR Severe Accident Guidelines, including the technical basis for severe accident management. • A description of procedure storage and laydown areas for hardcopy procedure use in the MCR, RSS, and risk significant local control stations. • A description of the framework utilized for procedure maintenance and control of updates.

Table 3.3-2

ITAAC For Human Factors Engineering

Design Commitment	Inspections, Tests, Analyses	Acceptance Criteria
8. Training Development is performed in accordance with the ESBWR HFE Training Development Implementation Plan.	i. An inspection is performed on the Training Development results summary report(s). {{Design Acceptance Criteria}}	i. A results summary report(s) exists that concludes that the Training Development design was conducted in accordance with the implementation plan and contains: • The purpose and scope of the Training Development. • The roles of organizations involved and the facilities and resources needed to satisfy the needs of the training. • A summary of design requirements and inputs to Training Development. {{Design Acceptance Criteria}}

Table 3.3-2

ITAAC For Human Factors Engineering

Design Commitment	Inspections, Tests, Analyses	Acceptance Criteria
	ii. An inspection is performed on the final Training Development results summary report(s).	ii. A final results summary report(s) exists that concludes that the Training Development process was conducted in accordance with the implementation plan and contains: • A description of the organization and content of the Training Program. • A description of the process for developing learning objectives. • A description of the methods for verifying the accuracy and completeness of training course materials, concluding that the training course materials are accurate and complete. • A description of the process for refining and updating the content and conduct of training. • A description of the plan for periodic retraining of personnel.

Table 3.3-2

ITAAC For Human Factors Engineering

Design Commitment	Inspections, Tests, Analyses	Acceptance Criteria
9. Human Factors Verification and Validation (HF V&V) is performed in accordance with the ESBWR HFE Human Factors Verification and Validation Implementation Plan.	An inspection is performed on the HF V&V results summary report(s).	A results summary report(s) exists that concludes that the HF V&V activity was conducted in accordance with the implementation plan and contains: • The scope of the HF V&V. • Major conclusions and their basis. • A description of the process for documenting and retaining the detailed HF V&V results. • A summary of the following activities: - Operational conditions used for the HF V&V. - HSI inventory and characterization. - HSI task support verification. - HFE design verification. - Integrated system validation. - Human Engineering Discrepancy resolution.

Table 3.3-2

ITAAC For Human Factors Engineering

Design Commitment	Inspections, Tests, Analyses	Acceptance Criteria
10. Design Implementation is performed in accordance with the ESBWR HFE Design Implementation Plan.	An inspection is performed on the Design Implementation results summary report(s).	A results summary report(s) exist that concludes that the Design Implementation activity was conducted in accordance with the implementation plan and contains: • The results of the final (as-built) HSI Verification concluding that the "As-Built" HSIs and their design characteristics correspond to the HSI Requirements and that Human Engineering Discrepancies (if any) resulting from non-conformance are resolved. • The results of the confirmation of the "As-Built" procedures and training design implementation concluding that Human Engineering Discrepancies resulting from adapted sections (if any) are resolved.

Table 3.3-2

ITAAC For Human Factors Engineering

Design Commitment	Inspections, Tests, Analyses	Acceptance Criteria
		• The results of the verification of HFE design not performed in the HF V&V concluding that items in the verification list meet verification criteria and Human Engineering Discrepancies (if any) resulting from non-conformance are resolved. • A description of the resolution to Human Engineering Discrepancies and Open issues in the issue tracking system (HFEITS). • A summary of turnover of remaining Human Engineering Discrepancies/HFEITS issues.

Table 3.3-2

ITAAC For Human Factors Engineering

Design Commitment	Inspections, Tests, Analyses	Acceptance Criteria
11. The strategy for the Human Performance Monitoring (HPM) process is developed in accordance with the ESBWR HFE Human Performance Monitoring Implementation Plan.	An inspection is performed on the HPM results summary report(s).	A results summary report(s) exists that concludes that the HPM strategy was developed in accordance with the implementation plan and contains: • A description of the HPM strategy including the scope, structure, and provisions for specific cause determination, trending of performance degradation and failures, and corrective actions. • A description of the database to track activities and corrective actions.

Table 3.3-2

ITAAC For Human Factors Engineering

Design Commitment	Inspections, Tests, Analyses	Acceptance Criteria
12. Integrated system validation scenarios are developed that incorporate detailed information related to sampling dimensions, scenario identification, scenario definition, simulation of remote actions, performance measurement characteristics, performance measurement selection, performance measurement criteria, test design, and data analysis.	An inspection is performed on the integrated system validation scenarios. {{Design Acceptance Criteria}}	The integrated system validation scenarios were developed in accordance with the HF V&V implementation plan and meet the review criteria in following sections of NUREG-0711, Rev. 2: • 11.4.1.2.1, Sampling Dimensions • 11.4.3.2.2, Validation Test Beds • 11.4.3.2.4, Scenario Definition • 11.4.3.2.5, Performance Measurement • 11.4.3.2.6, Test Design • 11.4.3.2.7, Data Analysis and Interpretation {{Design Acceptance Criteria}}

3.4 RADIATION PROTECTION

Design Description

The ESBWR Standard Plant is designed to maintain radiation exposures to plant personnel As Low As Reasonably Achievable (ALARA). Radiation protection is provided by application of the design and radiation control principles:

Area radiation monitoring provides local alarms (visual alarms in high noise areas) with variable alarm setpoints, and readout/alarm capability.

(1) Plant design provides for containment of airborne radioactive materials, and the ventilation system ensures that concentrations of airborne radionuclides are maintained at levels consistent with personnel access needs.

(2) (Deleted)

(3) The plant design provides radiation shielding for rooms, corridors and operating areas commensurate with their occupancy requirements.

(4) a. Airborne radioactivity monitoring is provided for areas of the plant in which there exists a significant potential for airborne contamination. The airborne radioactivity monitoring system provides local alarms (visual alarms in high noise areas) with variable alarm setpoints, and readout/alarm capability.

b. The airborne radioactivity monitoring system has the capability of detecting the time integrated concentrations of the most limiting internal dose particulate and iodine radionuclides in each area equivalent to the occupational concentration limits in 10 CFR20 Appendix B, Table 1, column 3 (Occupational Values) for ten Derived Airborne Concentration (DAC) hours in each monitored plant area.

Inspections, Tests, Analyses, and Acceptance Criteria

Table 3.4-1 provides definitions of the inspections, tests and analyses, together with associated acceptance criteria for ventilation and airborne monitoring and shielding.

Table 3.4-1

ITAAC For Radiation Protection

Design Commitment	Inspections, Tests, Analyses	Acceptance Criteria
1. Plant design provides for containment of airborne radioactive materials, and the ventilation system ensures that concentrations of airborne radionuclides are maintained at levels consistent with personnel access needs.	Expected concentrations of airborne radioactive material will be analyzed by radionuclide for normal plant operations, anticipated operational occurrences for each equipment cubicle, corridor, and operating area requiring personnel access. Calculations will consider: • Design ventilation flow rates for each area; • Typical leakage characteristics for equipment located in each area • A radiation source term in each fluid system will be determined based upon an assumed off gas rate of 3,700 MBq/second (30 minute decay) appropriately adjusted for radiological decay and buildup of activated corrosion and wear products. • Testing of safety-related isolation dampers will be performed in accordance with IEEE-338 requirements.	Analyses results for radioactive airborne concentration demonstrates that: • For normally occupied rooms and areas of the plant (i.e., those areas requiring routine access to operate and maintain the plant), equilibrium concentrations of airborne radionuclides will be a small fraction (10% or less) of the occupational concentration limits listed in 10 CFR 20 Appendix B. • For rooms that require infrequent access (such as for non-routine equipment maintenance), the ventilation system is capable of reducing radioactive airborne concentrations to and maintaining them at or below the occupational concentration limits listed in 10 CFR 20 Appendix B during the periods that occupancy is required. • For rooms that seldom require access, plant design provides containment and ventilation to reduce airborne contamination spread to other areas of lower contamination. • A test report documents that isolation dampers close within the designed

Table 3.4-1

ITAAC For Radiation Protection

Design Commitment	Inspections, Tests, Analyses	Acceptance Criteria
		time frame and limit leakage to a rate below the design assumed leakage rate.
2. (Deleted)		
3. The plant design provides radiation shielding for rooms, corridors and operating areas commensurate with their occupancy requirements.	Analyses (with inspections) of the expected radiation levels in each plant area will verify the adequacy of the shielding designs.	Analysis/inspection report(s) demonstrate that the maximum expected radiation dose rates in each plant area (deep dose equivalent measured at 30 cm from the source of the radiation, not contact dose rates) are no greater than the dose rates specified for the following zones, based on the access requirements of that area for plant operation and maintenance. Zone — Max Dose Rate (mSv/hr)[1] — Access Requirements A — 0.006 — Uncontrolled, unlimited access B — 0.01 — Controlled and unlimited access C — 0.05 — Controlled and limited access (20 hr/week)

Table 3.4-1

ITAAC For Radiation Protection

Design Commitment	Inspections, Tests, Analyses	Acceptance Criteria		
		Zone	Max Dose Rate (mSv/hr)[1]	Access Requirements
		D	0.25	Controlled and limited access (4 hr/week)
		E	1	Controlled and limited access (1 hr/week)
		F	10	Limited and controlled access with special authorization permit required
		G	100	Same as Zone F
		H	1000	Same as Zone F
		I	5000	Same as Zone F
		J	> 5000	Inaccessible during power and shutdown operations
		[1] 1 Sv = 100 rem		

Table 3.4-1

ITAAC For Radiation Protection

Design Commitment	Inspections, Tests, Analyses	Acceptance Criteria
4a. Airborne radioactivity monitoring is provided for areas of the plant in which there exists a significant potential for airborne contamination. The airborne radioactivity monitoring system provides local alarms (visual alarms in high noise areas) with variable alarm setpoints, and readout/alarm capability.	Tests will be performed to confirm the Airborne radioactivity monitoring system's as-built audible and visual alarm function is met upon exceeding a preset setpoint value.	The as-built airborne radioactivity monitors have visual and audible alarm capability.
4b. The airborne radioactivity monitoring system has the capability of detecting the time integrated concentrations of the most limiting internal dose particulate and iodine radionuclides in each area equivalent to the occupational concentration limits in 10 CFR 20 Appendix B, Table 1, column 3 (Occupational Values) for ten Derived Airborne Concentration (DAC) hours in each monitored plant area.	An as-built inspection will be performed for the Airborne radioactivity monitoring systems.	Airborne radioactivity monitors are capable of detecting the time integrated concentrations of the most limiting internal dose particulate and iodine radionuclides in each area equivalent to the occupational concentration limits in 10 CFR 20 Appendix B, Table 1, column 3 (Occupational Values) for ten DAC hours in each monitored plant area.

3.5 INITIAL TEST PROGRAM

Design Description

The ESBWR Initial Test Program (ITP) is a program that will be conducted following completion of construction and construction-related inspections and tests and extends to commercial operation. The test program will be composed of preoperational and startup test phases. The general objective of the ITP is to confirm that performance of the as-built facility is in compliance with the design characteristics used for safety evaluations.

The preoperational test phase of the ITP will consist of those test activities conducted prior to fuel loading. Preoperational testing will be conducted to demonstrate proper performance of structures, systems, or components, and design features in the assembled plant. Tests will include, as appropriate, logic and interlocks tests, control and instrumentation functional tests, equipment functional tests, system operational tests, and system vibration and expansion measurements.

The startup test phase of the ITP will begin with fuel loading and extends to commercial operation. The primary objective of the startup phase testing will be to confirm integrated plant performance with the nuclear fuel in the reactor pressure vessel and the plant at various power levels. Startup phase testing will be conducted at five test conditions during power ascension: open vessel, heatup, low power, mid-power, and high power. The following tests will be conducted during power operation testing:

(1) Core performance analysis,

(2) Steady-state testing,

(3) Control system tuning and demonstration,

(4) System transient tests; and

(5) Major plant transients (including trips).

Testing during all phases of the ITP will be conducted using step-by-step written procedures to control the conduct of each test. Such test procedures will delineate established test methods and applicable acceptance criteria. The test procedures will be developed from preoperational and startup test specifications. Approved test procedures will be made available to the NRC approximately 60 days prior to their intended use for preoperational tests and 60 days prior to scheduled fuel loading for startup phase tests. The preoperational and startup test specifications will also be made available to the NRC. Administratively, the ITP will be controlled in accordance with a startup administrative manual. This manual will contain the administrative requirements that govern the conduct of test program, review, evaluation and approval of test results, and test records retention.

Inspections, Tests, Analyses, and Acceptance Criteria

This section represents a commitment that combined operating license applicants referencing the certified design will implement an ITP that meets the objectives presented above. ITAAC, aimed at verification of ITP implementation, are neither necessary nor required.

3.6 DESIGN RELIABILITY ASSURANCE PROGRAM

Design Description

The GEH ESBWR Design Reliability Assurance Program (D-RAP) is used during detailed design and specific equipment selection phases to assure that the important ESBWR reliability assumptions of the probabilistic risk assessment (PRA) will be considered throughout the plant life. The PRA is used to evaluate plant responses to abnormal event initiations and the corresponding plant mitigation functions, to ensure potential plant damage scenarios pose a very low probability of risk to the public.

The objectives of the D-RAP are to provide reasonable assurance that SSCs in the scope of the D-RAP are designed such that: (1) Assumptions from the risk analysis are utilized; (2) SSCs when challenged, function in accordance with the assumed reliability; (3) SSCs whose failure results in a reactor trip, function in accordance with the assumed reliability; and (4) Maintenance actions to achieve the assumed reliability are identified.

The scope of the ESBWR D-RAP includes risk-significant SSCs, both safety-related and nonsafety-related, that provide defense-in-depth or result in significant improvement in the PRA evaluations, and all SSCs designated as RTNSS.

(1) Ensure that the design of systems, structures, and components within the scope of the reliability assurance program (RAP SSCs) is consistent with the risk insights and key assumptions (e.g., SSC design, reliability, and availability).

Inspections, Tests, Analyses, and Acceptance Criteria

Table 3.6-1 specifies the inspections, tests, analyses, and associated acceptance criteria for the D-RAP.

Table 3.6-1

ITAAC For The Design Reliability Assurance Program

Design Commitment	Inspections, Tests, Analyses	Acceptance Criteria
1. Ensure that the design of systems, structures, and components within the scope of the reliability assurance program (RAP SSCs) is consistent with the risk insights and key assumptions (e.g., SSC design, reliability, and availability).	An analysis will confirm that the design of all RAP SSCs has been completed in accordance with applicable D-RAP activities.	All RAP SSCs have been designed in accordance with the applicable reliability assurance activities for the D-RAP. •

3.7 POST ACCIDENT MONITORING INSTRUMENTATION

Design Description

The Post Accident Monitoring (PAM) instrumentation provides information required to monitor variables and systems over their anticipated ranges for post-accident conditions as appropriate to ensure adequate safety. This information may be safety-related or nonsafety-related.

The ESBWR Distributed Control and Information System (DCIS) provides the required signal paths to process this information. The ESBWR DCIS is subdivided into the safety-related DCIS (Q-DCIS) and the nonsafety-related DCIS (N-DCIS). For PAM instrumentation associated with critical safety functions and powered from safety-related sources the safety related Q-DCIS provides the required signal path to process this data. This information then is shown on Q-DCIS divisional safety-related displays. The safety-related information is also available to the N-DCIS through the qualified safety-related isolation devices for input to nonsafety-related displays, Plant Computer Functions (PCF), and the Alarm Management System (AMS). Type A, Type B, and Type C variables are powered from safety-related sources, and Type D and Type E variables will have their power source determined as part of the design process, (Regulatory Guide 1.97 addresses the types of variables).

For variables that are powered from nonsafety-related sources the N-DCIS provides the required signal paths to process this information. This information is used for input to nonsafety-related displays, plant computer functions, and the Alarm Management System.

There is a Human Factors Engineering defined process to determine the appropriate variables and types (A, B, C, D, or E). That is, the determination of the scope of instrumentation relied upon to fulfill the post-accident monitoring function is determined through the Human Factors Engineering process (see Section 3.3).

For each variable and type the process determines additional characteristics appropriate to that variable as outlined below:

<u>Performance criteria</u>

- Range
- Accuracy
- Response time
- Required instrument functional duration
- Reliability
- Performance assessment documentation

<u>Design criteria</u>

- Single failure
- Common cause failure
- Independence and separation
- Isolation

- Information ambiguity
- Power supply
- Calibration
- Testability
- Direct measurement
- Control of access
- Maintenance and repair
- Auxiliary supporting features
- Portable instruments
- Documentation of Design Criteria

Qualification criteria

- Type A variables
- Type B variables
- Type C variables
- Type D variables
- Type E variables
- Portable instruments
- Post Event operating time
- Documentation of qualification criteria

Display criteria

- Information characteristics
- Human factors
- Anomalous indications
- Continuous vs. on-demand display
- Trend or rate information
- Display identification
- Type of monitoring channel display
- Display location
- Information ambiguity
- Recording
- Digital display signal validation

- Display criteria documentation

PAM Instrumentation software is developed in accordance with the software development program described in Section 3.2.

Inspections, Tests, Analyses, and Acceptance Criteria

Table 3.7-1 specifies the inspections, tests, analyses, and associated acceptance criteria for post accident monitoring instrumentation.

Table 3.7-1

ITAAC For Post Accident Monitoring Instrumentation

Design Commitment	Inspections, Tests, Analyses	Acceptance Criteria
1. The installed post-accident monitoring instrumentation (scope as determined by the Human Factors Engineering process in Section 3.3) conforms with the requirements (variables, types, performance criteria, design criteria, qualification criteria, display criteria, and quality assurance) as described in Section 3.7.	Inspections, tests or analysis will be performed to verify that the installed post-accident monitoring instrumentation conforms with the requirements as described in Section 3.7.	The installed post accident monitoring instrumentation conforms with the requirements as described in Section 3.7.
2. (Deleted)		

3.8 ENVIRONMENTAL AND SEISMIC QUALIFICATION OF MECHANICAL AND ELECTRICAL EQUIPMENT

Equipment qualification applies to safety-related electrical and mechanical equipment located in harsh environments and digital instrumentation and controls (I&C) equipment in mild environments. The electrical equipment identified in 10 CFR 50.49 as electric equipment important to safety covered by (b)(1), (b)(2), and (b)(3) are subject to equipment qualification.

Certain equipment that supports Regulatory Treatment of Non-Safety Systems (RTNSS) functions and that is located in harsh environments is also subject to equipment qualification.

Table 3.8-1 lists equipment subject to environmental qualification requirements, except that the specific digital I&C equipment subject to environmental qualification requirements are defined through the Design Acceptance Criteria process.

Dynamic and seismic qualification for digital I&C is addressed in this section. The specific digital I&C equipment subject to dynamic and seismic qualification are defined through the Design Acceptance Criteria process.

Design Description

(1) The electrical equipment listed in Table 3.8-1 as located in a harsh environment can perform its safety-related or RTNSS function under normal, abnormal and design bases accident environmental conditions.

(2) The mechanical equipment listed in Table 3.8-1 as located in a harsh environment can perform its safety-related or RTNSS function under normal, abnormal and design bases accident environmental conditions.

(3) The safety-related digital I&C equipment in systems listed in Table 2.2.15-1 (including digital components in the safety-related electrical distribution system) located in a mild environment can perform its safety-related function under normal and AOO environmental conditions.

(4) The Seismic Category I digital I&C equipment in systems listed in Table 2.2.15-1 (including digital components in the safety-related electrical distribution system) can perform its safety-related function before, during and after dynamic and seismic design bases event conditions.

Inspections, Tests, Analyses, and Acceptance Criteria

Table 3.8-2 specifies the equipment qualification inspections, tests, analyses, and associated acceptance criteria for equipment qualification program mechanical and electrical equipment.

Table 3.8-1

Electrical and Mechanical Equipment for Environmental Qualification

Components (note 5)	Quantity	Location (note 1)	Function (note 2)	Required Operation Time (note 3)	Qualification Program (note 4)
Nuclear Boiler System					
Depressurization Valves	8	CV	ESF	72 hr	MH
Safety Relief Valves	10	CV	ESF	72 hr	MH
Temperature element in DPV/SRV Discharge	18	CV	ESF	72 hr	EH
MSIV - Inboard	4	CV	PB	100 Days	MH
MSIV - Outboard	4	ST	PB	100 Days	MH
MSIV Drain Bypass Valve	2	ST	ESF	72 hr	MH
Steam Line Lowpoint Drain Bypass Valve	1	TB	ESF	72 hr	MH
Feedwater isolation valve	8	ST, CV	PB	100 Days	MH
RPV Level Transmitters	All	RB	ESF	100 Days	EH
RPV Temperature Elements	All	CV	ESF	100 Days	EH
RPV Pressure Transmitter	All	RB	ESF	100 Days	EH
Feed Piping Diff Pressure Transmitter	All	RB	ISOL	100 Days	EH
Steam Line Flow Transmitter	All	RB	ISOL	100 Days	EH
Electrical Modules and Cable	All	CV, RB, ST, TB	ESF	100 Days	EH
Isolation Condenser System					
Isolation Valves	16	CV	PB	100 Days	MH
Isolation Valves Operator	16	CV	ESF	100 Days	MH
Condensate Return Valves	4	CV	ESF	100 Days	MH
Condensate Return Valves Operator	4	CV	ESF	100 Days	MH

Table 3.8-1

Electrical and Mechanical Equipment for Environmental Qualification

Components (note 5)	Quantity	Location (note 1)	Function (note 2)	Required Operation Time (note 3)	Qualification Program (note 4)
Condensate Return Bypass Valve	4	CV	ESF	100 Days	MH
Condensate Return Bypass Valve Operator	4	CV	ESF	100 Days	MH
Upper Header Vent Valve	8	CV	ESF	100 Days	MH
Upper Header Vent Valve Actuator	8	CV	ESF	100 Days	MH
Lower Header Vent Valve	16	CV	ESF	100 Days	MH
Lower Header Vent Valve Actuator	12	CV	ESF	100 Days	MH
Pool Cross-Connect Valves	4	RB	ESF	100 Days	MH
Vent Line Temperature Element	8	CV	ESF	100 Days	EH
Condensate Drain Temperature Element	4	CV	ESF	100 Days	EH
Steam Piping Diff Pressure Transmitter	8	CV	ESF	100 Days	EH
Condensate Drain Diff Pressure Transmitter	8	CV	ESF	100 Days	EH
Electrical Modules and Cable	All	CV, RB	ESF	100 Days	EH
Rod Control and Information System					
Electrical Modules and Cable	All	CB, RB	ESF	72 hr	EH
Control Rod Drive System					
HCU Scram Solenoid Pilot Valve	135	RB	ESF	72 hr	MH
FMCRD Passive Holding Brake	269	CV	ESF	72 hr	MH

Table 3.8-1

Electrical and Mechanical Equipment for Environmental Qualification

Components (note 5)	Quantity	Location (note 1)	Function (note 2)	Required Operation Time (note 3)	Qualification Program (note 4)
FMCRD Separation Switch	538	CV	ESF	72 hr	EH
Charging Water Header Pressure Transmitter	4	RB	ESF	72 hr	EH
Electrical Modules and Cable	All	CV, RB	ESF	72 hr	EH
High Pressure CRD Makeup Line Isolation Valves	2	RB	ESF	72 hr	MH
Backup Scram Valve Solenoids	2	RB	ESF	72 hr	EH
Leak Detection and Isolation System					
Pressure Transmitters	All	CV, RB, CB	ESF	100 Days	EH
Temperature Sensors	All	CV, RB, CB	ESF	100 Days	EH
Electrical Modules and Cable	All	CV, RB, CB	ESF	100 Days	EH
Feedwater Control System					
Electric Modules and Cable	All	CB, RB	ESF	72 hr	EH
Neutron Monitoring System					
Detector and Tube Assembly	All	CV	ESF	72 hr	MH
Electrical Modules and Cable	All	CV, RB, CB	ESF	100 Days	EH
Remote Shutdown System					
Electrical Panels, Modules and Cable	All	RB	ESF	100 Days	C

Table 3.8-1

Electrical and Mechanical Equipment for Environmental Qualification

Components (note 5)	Quantity	Location (note 1)	Function (note 2)	Required Operation Time (note 3)	Qualification Program (note 4)
Safety-Related Distributed Control and Information System (DCIS)					
Electrical Modules and Cable	All	RB, CB	ESF	100 Days	C
Reactor Protection System					
Electrical Modules and Cable	All	CB, RB	ESF	100 Days	EH
Diverse Protection System					
Electrical Modules and Cable	All	CB, RB, TB	ESF, ISOL	100 Days	EH
Safety System Logic and Control					
Electrical Modules and Cable	All	CB, RB	ESF	100 Days	EH
Standby Liquid Control System					
Isolation Check Valves	4	CB, RB	PB	100 days	MH
Squib Injection Valves	4	RB	ESF	72 hr	MH
Injection Shut-Off Valves Actuator	4	RB	ESF	100 Days	EH
Nitrogen Charging Globe Valve	2	RB	ESF	100 Days	MH
Nitrogen Charging Globe Valve Actuator	2	RB	ESF	100 Days	EH
Nitrogen Charging Check Valve	2	RB	ESF	72 hr	MH
Accumulator Depressurization Valves	4	RB	ESF	100 Days	MH
Accumulator Depressurization Valves Actuator	4	RB	ESF	100 Days	EH
Accumulator Relief Valve	2	RB	ESF	72 hr	MH

Table 3.8-1

Electrical and Mechanical Equipment for Environmental Qualification

Components (note 5)	Quantity	Location (note 1)	Function (note 2)	Required Operation Time (note 3)	Qualification Program (note 4)
Injection Shut Off Valves	4	RB	ESF	100 Days	MH
Accumulator Level Instrumentation	8	RB	ESF	100 Days	EH
Accumulator Pressure Instrumentation	8	RB	ESF	100 Days	EH
Electrical Modules and Cable	All	CV, RB	ESF	100 Days	EH
Process Radiation Monitoring System					
Isolation Valves	4	CV, RB, CB	ESF	100 Days	MH
Radiation Monitors, Sensors, Electrical Modules and Cable	All	CV, RB, CB	ESF	100 Days	EH
Gravity-Driven Cooling System (GDCS)					
GDCS Pool Level Instrumentation	12	CV	ESF	100 Days	EH
GDCS Squib Valve to GDCS Pool	8	CV	ESF	72 hr	MH
GDCS Check Valve to GDCS Pool	8	CV	ESF	72 hr	MH
GDCS Squib Valve to Suppression Pool	4	CV	ESF	72 hr	MH
GDCS Check Valve to Suppression Pool	4	CV	ESF	72 hr	MH
GDCS Squib Valve to Lower Drywell (DW)	12	CV	ESF	72 hr	MH
Electrical Modules and Cable	All	CV, RB, CB	ESF	100 Days	EH

Table 3.8-1

Electrical and Mechanical Equipment for Environmental Qualification

Components (note 5)	Quantity	Location (note 1)	Function (note 2)	Required Operation Time (note 3)	Qualification Program (note 4)
Fuel and Auxiliary Pools Cooling System					
Containment Isolation Valve (CIV) - Drywell Spray - Outboard	1	RB	PB	100 Days	MH
CIV - Drywell Spray - Inboard	1	CV	PB	100 Days	MH
CIV – Suppression Pool Cooling (SPC) Suction - Outboard	4	RB	PB	100 Days	MH
CIV - SPC Return - Outboard	2	RB	PB	100 Days	MH
CIV - SPC Return - Inboard	2	CV	PB	100 Days	MH
CIV - GDCS Suction - Outboard	1	RB	PB	100 Days	MH
CIV - GDCS Suction - Inboard	1	CV	PB	100 Days	MH
CIV - GDCS Return - Outboard	1	RB	PB	100 Days	MH
CIV - GDCS Return - Inboard	1	CV	PB	100 Days	MH
LPCI Isolation	4	FB, RB	PB	100 Days	MH
IC/PCCS Pool Level Instrumentation	All	RB	ESF	100 Days	EH
Fuel Pool Level Instruments	2	FB	ESF	100 Days	EH
Electrical Modules and Cable	All	CV, FB, RB, CB	ESF	100 Days	EH
Reactor Water Cleanup/Shutdown Cooling System					
CIV - Mid Vessel - Inboard	2	CV	PB, ISOL	100 Days	MH

Table 3.8-1

Electrical and Mechanical Equipment for Environmental Qualification

Components (note 5)	Quantity	Location (note 1)	Function (note 2)	Required Operation Time (note 3)	Qualification Program (note 4)
CIV - Mid Vessel - Outboard	2	RB	PB, ISOL	100 Days	MH
CIV - Mid Vessel - Inboard Operator	2	CV	ISOL	72 hr	EH
CIV - Mid Vessel - Outboard Operator	2	RB	ISOL	72 hr	EH
CIV - Bottom Drain Inboard	2	CV	PB, ISOL	100 Days	MH
CIV - Bottom Drain Outboard	2	RB	PB, ISOL	100 Days	MH
CIV - Bottom Drain Inboard Operator	2	CV	ISOL	72 hr	EH
CIV - Bottom Drain Outboard Operator	2	RB	ISOL	72 hr	EH
CIV - Process Sampling Line -Inboard	2	CV	PB, PAMS	100 Days	MH
CIV - Process Sampling Line -Outboard	2	RB	PB, PAMS	100 Days	MH
CIV - Process Sampling Line -Inboard Operator	2	CV	ISOL, PAMS	100 Days	EH
CIV - Process Sampling Line -Outboard Operator	2	RB	ISOL, PAMS	100 Days	EH
Return Line Shutoff Valve	2	RB	ISOL	100 Days	MH
Check Valve to Feedwater	4	RB	ISOL	100 Days	MH
Mid-vessel Flow Instrumentation	All	CV	ISOL	100 Days	EH
Mid-vessel Temperature Instrumentation	All	CV	ISOL	100 Days	EH
Bottom Drain Flow Instrumentation	All	CV	ISOL	100 Days	EH

Table 3.8-1

Electrical and Mechanical Equipment for Environmental Qualification

Components (note 5)	Quantity	Location (note 1)	Function (note 2)	Required Operation Time (note 3)	Qualification Program (note 4)
Bottom Drain Temperature Instrumentation	All	CV	ISOL	100 Days	EH
Return Line Flow Instrumentation	All	RB	ISOL	100 Days	EH
Return Line Temperature Instrumentation	All	RB	ISOL	100 Days	EH
Overboard Flow Instrumentation	All	RB	ISOL	100 Days	EH
Overboard Temperature Instrumentation	All	RB	ISOL	100 Days	EH
Electrical Modules and Cables	All	CV, RB	ESF	100 Days	EH
Main Control Room (MCR) Panels					
Panels, Modules and Cables	All	CB	ESF	100 Days	C
MCR Back Room Panels					
Panels, Modules and Cable	All	CB	ESF	100 Days	C
Local Panels and Racks					
Panels, Modules and Cable	All	ALL	ESF	100 Days	EH
Condensate and Feedwater System					
Feed Line Temperature Element	All	ST	ESF	100 Days	EH
Feed Piping Diff Pressure Transmitter	All	ST	ISOL	100 Days	EH
Electrical Modules and Cable	All	ST, CB	ESF	100 Days	EH
Makeup Water System					
Isolation Valves	All	CV, RB	ISOL	100 Days	MH

Table 3.8-1

Electrical and Mechanical Equipment for Environmental Qualification

Components (note 5)	Quantity	Location (note 1)	Function (note 2)	Required Operation Time (note 3)	Qualification Program (note 4)
Chilled Water System					
Isolation Valves	All	CV, RB	ISOL	100 Days	MH
Service Air System					
Isolation Valves	All	CV, RB	ISOL	100 Days	MH
High Pressure Nitrogen Supply System					
Isolation Valves	4	CV, RB	ISOL	100 Days	MH
Electrical Power Distribution System (EPDS)					
Cable and Supports	All	CB, FB, RB	ESF	100 Days	EH
Uninterruptible AC Power Supply					
Electrical Modules and Cable	All	CV, CB, RB	ESF	100 Days	EH
Direct Current Power Supply					
Divisional 250 VDC Battery	8	RB	ESF	100 Days	E
Divisional 250 VDC Normal/Standby Battery Charger	12	RB	ESF	100 Days	E
Divisional 250 VDC Power Center	8	RB	ESF	100 Days	E
Divisional 250 VDC Transfer Switch Box	8	RB	ESF	100 Days	E
Isolation Power Center Normal Main Circuit Breaker	4	RB	ISOL	100 Days	E
Isolation Power Center Alternate Main Circuit Breaker	4	RB	ISOL	100 Days	E

Table 3.8-1

Electrical and Mechanical Equipment for Environmental Qualification

Components (note 5)	Quantity	Location (note 1)	Function (note 2)	Required Operation Time (note 3)	Qualification Program (note 4)
Isolation Power Center Supply Breaker to Division 250 VDC Normal Battery Charger	12	RB	ISOL	100 Days	E
Electrical Modules and Cable	All	CV, CB, RB, TB	ESF	100 Days	E
Raceway System					
Electrical Penetrations	All	CV	PB	100 Days	EH
Conduit, Cable Trays and Supports	All	CV, CB, RB, TB, FB	ESF	100 Days	EH
Containment System					
Vacuum Breakers	3	CV	ESF	100 Days	MH
Vacuum Breaker Isolation Valves	3	CV	ESF	72 hr	MH
Instrumentation and Cables	All	CV	ESF	100 Days	EH
Basemat Internal Melt Arrest Coolability (BiMAC) Temperature Element	ALL	CV	ESF	100 Days	EH
BiMAC Temperature Switch	ALL	CV	ESF	100 Days	EH
Passive Containment Cooling System					
Vent Fan Check Valves	6	CV	ESF	100 Days	MH
Passive Containment Cooling System (PCCS) Vent Fan	6	CV	ESF	100 Days	EH
Containment Inerting System					
Isolation Valve	10	CV, RB	ISOL	100 Days	MH

Table 3.8-1

Electrical and Mechanical Equipment for Environmental Qualification

Components (note 5)	Quantity	Location (note 1)	Function (note 2)	Required Operation Time (note 3)	Qualification Program (note 4)
Electrical Modules and Cable	All	CB, RB	ESF	100 Days	EH
Passive Autocatalytic Recombiner System					
Passive Autocatalytic Recombiners	All	CV	ESF	100 Days	MH
Containment Monitoring System					
Containment Isolation Valves	All	CV, RB	ISOL	100 Days	MH
Electrical Modules and Cable	All	CB, CV, RB	ESF	100 Days	EH
Drywell Pressure Transmitters	All	RB	ESF	100 days	EH
Differential Pressure Transmitters	All	RB	ESF	100 days	EH
Suppression Pool Temperature Element	All	CV	ESF	100 days	EH
Lower DW Level Transmitter	All	RB	ESF, PAMS	100 days	EH
Suppression Pool Level Transmitters	All	RB	PAMS	100 days	EH
Suppression Pool Pressure Transmitters	All	RB	PAMS	100 days	EH
Hydrogen Analyzers	All	RB	ESF, PAMS	100 days	EH
Oxygen Analyzers	All	RB	ESF, PAMS	100 days	EH
Reactor Building HVAC					
Building Isolation Dampers	All	RB	ESF	100 Days	EH
Electrical Modules and Cable	All	RB	ESF	100 Days	EH

Table 3.8-1

Electrical and Mechanical Equipment for Environmental Qualification

Components (note 5)	Quantity	Location (note 1)	Function (note 2)	Required Operation Time (note 3)	Qualification Program (note 4)
Control Building HVAC					
Control Room Habitability Area (CRHA) Supply Air Isolation Dampers	All	CB	ESF	100 Days	E
Emergency Filter Unit (EFU) Downstream Isolation Dampers	All	CB	ESF	100 Days	E
CRHA Restroom Exhaust Isolation Dampers	All	CB	ESF	100 Days	E
CRHA Smoke Purge Intake Isolation Dampers	All	CB	ESF	100 Days	E
CRHA Smoke Purge Exhaust Isolation Dampers	All	CB	ESF	100 Days	E
Emergency Filter Unit (EFU)	All	CB	ESF	100 Days	E
Electrical Modules and Cable	All	CB	ESF	100 Days	E
Fuel Building HVAC					
Fuel Building General Area HVAC Subsystem (FBGAVS) Building Supply Air Isolation Dampers	All	FB	ESF	100 Days	EH
FBGAVS Building Exhaust Air Isolation Dampers	All	FB	ESF	100 Days	EH
Fuel Building Fuel Pool Area HVAC Subsystem (FBFPVS) Building Supply Air Isolation Dampers	All	FB	ESF	100 Days	EH
FBFPVS Building Exhaust Air Isolation Dampers	All	FB	ESF	100 Days	EH

Table 3.8-1

Electrical and Mechanical Equipment for Environmental Qualification

Components (note 5)	Quantity	Location (note 1)	Function (note 2)	Required Operation Time (note 3)	Qualification Program (note 4)
Electrical Modules and Cable	All	FB	ESF	100 Days	EH

Note 1: CV – Containment Vessel
ST – Steam Tunnel
RB – Reactor Building
FB – Fuel Building
CB – Control Building
TB – Turbine Building
OO – Outdoors Onsite
When multiple locations are listed, information in this table applies to equipment in all locations listed that also meets the other criteria shown.

Note 2: ESF – Engineered Safety Feature
PAMS – Post Accident Monitoring
ISOL – Containment Isolation
PB – Primary Pressure Boundary
When multiple functions are listed, information in this table applies to equipment associated with either function that also meets the other criteria shown.

Note 3: Required operation time refers to the period of time which the equipment must remain available or operational. Required operation times apply to equipment when all criteria shown in the first four columns of the table are met.

Note 4: E – Electrical Equipment Program
M – Mechanical Equipment Program
C – Computer Based I&C System Program
H – Harsh Environment (omission of H indicates Mild Environment)
Qualification program classifications apply to equipment when all criteria shown in the first four columns of the table are met.

Note 5: Valve operators/actuators are considered to be part of the valve assembly and are generally not listed separately in this table.

Table 3.8-2

ITAAC For Environmental and Seismic Qualification of Mechanical and Electrical Equipment

Design Commitment	Inspections, Tests, Analyses	Acceptance Criteria
1. The electrical equipment listed in Table 3.8-1 as located in a harsh environment can perform its safety-related or RTNSS function under normal, abnormal and design bases accident environmental conditions.	i. (Deleted)	
	ii. Type tests, or a combination of type tests and analyses, will be performed.	ii. The electrical equipment listed in Table 3.8-1 as located in a harsh environment is qualified to perform its safety-related or RTNSS function during the applicable normal and abnormal environmental conditions that would exist before, during, and following a design basis accident without loss of safety-related or RTNSS function for the time required to perform the safety function.

Table 3.8-2

ITAAC For Environmental and Seismic Qualification of Mechanical and Electrical Equipment

Design Commitment	Inspections, Tests, Analyses	Acceptance Criteria
	iii. Inspection will be performed of the EQD for the as-built electrical equipment and the associated wiring, cables, and terminations located in a harsh environment.	iii. The EQD exists and concludes that the as-built electrical equipment listed in Table 3.8-1 and the associated wiring, cables, and terminations located in a harsh environment are qualified for a harsh environment and are bounded by type tests, or a combination of type tests and analyses.
2. The mechanical equipment listed in Table 3.8-1 as located in a harsh environment can perform its safety-related or RTNSS function under normal, abnormal and design bases accident environmental conditions.	i. (Deleted)	
	ii. Type tests, or a combination of type tests and analyses, will be performed.	ii. The mechanical equipment listed in Table 3.8-1 as located in a harsh environment is qualified to perform its safety-related or RTNSS function during the applicable normal and abnormal environmental conditions that would exist before, during, and following a design basis accident without loss of safety function for the time required to perform the safety function.

Table 3.8-2

ITAAC For Environmental and Seismic Qualification of Mechanical and Electrical Equipment

Design Commitment	Inspections, Tests, Analyses	Acceptance Criteria
	iii. Inspection will be performed of the EQD for the as-built mechanical equipment located in a harsh environment.	iii. The EQD exists and concludes that the as-built mechanical equipment located in a harsh environment are qualified for a harsh environment and are bounded by type tests, or a combination of type tests and analyses.
3. The safety-related digital I&C equipment in systems listed in Table 2.2.15-1 (including digital components in the safety-related electrical distribution system) located in a mild environment can perform its safety-related function under normal and AOO environmental conditions.	i. Analysis will be performed to identify the environmental design bases of digital I&C equipment in systems listed in Table 2.2.15-1 (including digital components in the safety-related electrical distribution system) to identify the equipment to be environmentally qualified. {{Design Acceptance Criteria}}	i. The analyses results identify the environmental design bases for the Seismic Category I digital I&C equipment in systems listed in Table 2.2.15-1 (including digital components in the safety-related electrical distribution system) to identify the equipment to be environmentally qualified. {{Design Acceptance Criteria}}

Table 3.8-2

ITAAC For Environmental and Seismic Qualification of Mechanical and Electrical Equipment

Design Commitment	Inspections, Tests, Analyses	Acceptance Criteria
	ii. Type tests, or a combination of type tests and analyses, will be performed.	ii. The safety-related digital I&C equipment (including digital components in the safety-related electrical distribution system) located in a mild environment is qualified to perform its safety function during the applicable normal and abnormal environmental conditions that would exist before, during, and following a design basis accident without loss of safety function for the time required to perform the safety function.
	iii. Inspection will be performed of the EQD for the as-built digital I&C equipment located in a mild environment	iii. The EQD exists and concludes that the as-built safety-related digital I&C equipment (including digital components in the safety-related electrical distribution system) and the associated wiring, cables, and terminations located in a mild environment are qualified for a mild environment and are bounded by type tests, analyses, or a combination of type tests and analyses.

Table 3.8-2

ITAAC For Environmental and Seismic Qualification of Mechanical and Electrical Equipment

Design Commitment	Inspections, Tests, Analyses	Acceptance Criteria
4. The Seismic Category I digital I&C equipment in systems listed in Table 2.2.15-1 (including digital components in the safety-related electrical distribution system) can perform its safety-related function before, during and after dynamic and seismic design bases event conditions.	i. Analysis will be performed to identify the dynamic and seismic design bases of digital I&C equipment in systems listed in Table 2.2.15-1 (including digital components in the safety-related electrical distribution system) to identify the equipment to be seismically qualified. {{Design Acceptance Criteria}} ii. Dynamic and seismic type tests, or a combination of type tests and analyses, will be performed.	i. The analyses results identify the dynamic and seismic design bases for the Seismic Category I digital I&C equipment in systems listed in Table 2.2.15-1 (including digital components in the safety-related electrical distribution system) to identify the equipment to be seismically qualified. {{Design Acceptance Criteria}} ii. The Seismic Category I digital I&C equipment in systems listed in Table 2.2.15-1 (including digital components in the safety-related electrical distribution system) and subject to seismic qualification can withstand the dynamic and seismic conditions that would exist before, during, and following a design basis event without loss of safety function.

Table 3.8-2

ITAAC For Environmental and Seismic Qualification of Mechanical and Electrical Equipment

Design Commitment	Inspections, Tests, Analyses	Acceptance Criteria
	iii. Inspection will be performed of the DQD for the as-built equipment.	iii. The DQD exists and concludes that the as-built Seismic Category I digital I&C equipment in systems listed in Table 2.2.15-1 (including digital components in the safety-related electrical distribution system) and subject to seismic qualification is bounded by dynamic and seismic type tests, or a combination of type tests and analyses.

4. INTERFACE MATERIAL

An applicant for a combined license (COL) that references the ESBWR certified design must provide design features or characteristics that comply with the interface requirements for the plant design and inspections, tests, analyses, and acceptance criteria (ITAAC) for the site-specific portion of the facility design, in accordance with 10 CFR 52.80 (a).

Tier 1 interfaces are identified for the conceptual design portion of the Plant Service Water System for the certified design.

4.1 PLANT SERVICE WATER SYSTEM

Design Description

The Plant Service Water System (PSWS) is the heat sink for the Reactor Component Cooling Water System (RCCWS). The PSWS does not perform any safety-related function. There is no interface with any safety-related component. The PSWS provides the non-safety related functions to support the post-72 hour cooling for RCCWS. The PSWS system must have the volume of water necessary to accommodate losses due to evaporation, drift, etc. without make-up for seven days using the most limiting condition of operation as defined by the PRA model. The volume maintained must also ensure that the PSWS pumps have sufficient available net positive suction head at the pump suction location for the lowest probable water level of the heat sink. The most limiting condition equates to 2.02×10^7 MJ (1.92×10^{10} BTU) over a period of seven days.

The PSWS cooling towers and basins are not within the scope of the certified design. A specific design for this portion of the PSWS shall be selected for any facility, which has adopted the certified design. The plant-specific portion of the PSWS shall meet the interface requirements defined below.

Interface Requirements

The interface requirements are necessary for supporting the post 72-hour cooling function of the PSWS. The volume of water shall be sufficient such that no active makeup shall be necessary to remove 2.02×10^7 MJ (1.92×10^{10} BTU) over a period of seven days. Additionally, the PSWS pumps must have sufficient available net positive suction head at the pump suction location for the lowest probable water level of the heat sink. Consequently, verification of compliance with the interface requirements shall be achieved by inspections, tests, and analyses that are similar to those provided for the certified design. The combined license applicant referencing the certified design shall develop these inspections, tests, and analyses, together with their associated acceptance criteria.

4.2 OFFSITE POWER

Design Description

The offsite portion of the Preferred Power Supply (PPS) consists of at least two electrical circuits and associated equipment that are used to interconnect the offsite transmission system with the plant main generator and the onsite portions of the PPS. The PPS consists of the normal preferred and alternate preferred power sources and includes those portions of the offsite power system and the onsite power system required for power flow from the offsite transmission system to the safety-related Isolation Power Centers (IPC) incoming line breakers.

The interface between the normal preferred ESBWR certified plant onsite portion of the PPS and the site-specific offsite portion of the PPS is at the switchyard side terminals of the high side Motor Operated Disconnect (MOD) of the Unit Auxiliary Transformer (UAT) circuit breaker and main generator circuit breaker. The interface between the alternate preferred ESBWR certified plant onsite portion of the PPS and the site specific offsite portion of the PPS is at the switchyard side terminals of the Reserve Auxiliary Transformer (RAT) high side MODs.

Interface Requirements

A combined license applicant referencing the ESBWR certified design shall develop an ITAAC to verify that the as-built offsite portion of the PPS from the transmission network to the interface with the onsite portions of the PPS satisfy the applicable provisions of GDC 17. Specifically, the ITAAC shall verify:

(1) At least two independent circuits supply electric power from the transmission network to the interface with the onsite portions of the PPS.

(2) Each offsite circuit interfacing with the onsite portions of the PPS is adequately rated to supply the load requirements during design basis operating modes (refer to Table 2.13.1-2, Item 9).

(3) During steady state operation, the offsite portion of the PPS is capable of supplying voltage at the interface with the onsite portions of the PPS that will support operation of safety-related loads during design basis operating modes.

(4) During steady state operation, the offsite portion of the PPS is capable of supplying required frequency at the interface with the onsite portions of the PPS that will support operation of safety-related loads during design basis operating modes.

(5) The fault current contribution of the offsite portion of the PPS is compatible with the interrupting capability of the onsite fault current interrupting devices.

5. SITE PARAMETERS

5.1 SCOPE AND PURPOSE

The intent of this section is to provide Tier 1 material that complies with the 10 CFR Part 52 requirements to define the site parameters postulated for the ESBWR certified design.

Assuming the certified design will be referenced for a wide range of sites, it is necessary to specify a set of site parameters enveloping the conditions that could occur at most potential power plant sites in the United States. These parameters are provided in Table 5.1-1. It is intended that any facility that references the certified design will utilize a site where the actual site-specific conditions are within the defined envelope.

In the case of seismic design and soil parameters not meeting the defined conditions, site-specific soil-structure interaction analyses may be performed. The results may be used to confirm the seismic design adequacy of the certified design using approved methods and acceptance criteria.

Table 5.1-1

Envelope of ESBWR Standard Plant Site Parameters (1)

Maximum Ground Water Level:	0.61 m (2 ft) below plant grade
Extreme Wind:	**Seismic Category I, II and Radwaste Building Structures** - 100-year Wind Speed (3-sec gust): 67.1 m/s (150 mph) - Exposure Category: D **Other Seismic Category NS Standard Plant Structures** - 50-year Wind Speed (3-sec gust): 58.1 m/s (130 mph)
Maximum Flood (or Tsunami) Level:	0.3 m (1 ft) below plant grade
Tornado:	- Maximum Tornado Wind Speed: 147.5 m/s (330 mph) - Maximum Rotational Speed: 116.2 m/s (260 mph) - Translational Speed: 31.3 m/s (70 mph) - Radius: 45.7 m (150 ft) - Pressure Drop: 16.6 kPa (2.4 psi) - Rate of Pressure Drop: 11.7 kPa/s (1.7 psi/s) - Missile Spectrum(7): Spectrum I of SRP 3.5.1.4, Rev 2 applied to full building height.
Precipitation (for Roof Design):	- Maximum Rainfall Rate: 49.3 cm/hr (19.4 in/hr) - Maximum Short Term Rate: 15.7 cm (6.2 in) in 5 minutes - Maximum Ground Snow Load for normal winter precipitation event: 2394 Pa (50 lbf/ft^2) - Maximum Ground Snow Load for extreme winter precipitation event: 7757 Pa (162 lbf/ft^2)
Ambient Design Temperature:	**2% Annual Exceedance Values** - Maximum: 35.6°C (96°F) dry bulb 26.1°C (79°F) wet bulb (mean coincident) 27.2°C (81°F) wet bulb (non-coincident) - Minimum: -23.3°C (-10°F) **1% Annual Exceedance Values** - Maximum: 37.8°C (100°F) dry bulb 26.1°C (79°F) wet bulb (mean coincident) 27.8°C (82°F) wet bulb (non-coincident) - Minimum: -23.3°C (-10°F) **0% Exceedance Values** - Maximum: 47.2°C (117°F) dry bulb 26.7°C (80°F) wet bulb (mean coincident) 31.1°C (88°F) wet bulb (non-coincident) - Minimum: -40°C (-40°F)

Table 5.1-1
Envelope of ESBWR Standard Plant Site Parameters (continued)

Soil Properties: [6]	- Minimum Static Bearing Capacity [2]: Greater than or equal to the maximum static bearing demand multiplied by a factor of safety appropriate for the design load combination. Maximum Static Bearing Demand: Reactor/Fuel Building: 699 kPa (14,600 lbf/ft^2) Control Building: 292 kPa (6,100 lbf/ft^2) Fire Water Service Complex: 165 kPa (3,450 lbf/ft^2) - Minimum Dynamic Bearing Capacity [2]: Greater than or equal to the maximum dynamic bearing demand multiplied by a factor of safety appropriate for the design load combination. Maximum Dynamic Bearing Demand (SSE + Static): **Reactor/Fuel Building:** Soft: 1100 kPa (23,000 lbf/ft^2) Medium: 2700 kPa (56,400 lbf/ft^2) Hard: 1100 kPa (23,000 lbf/ft^2) **Control Building:** Soft: 500 kPa (10,500 lbf/ft^2) Medium: 2200 kPa (46,000 lbf/ft^2) Hard: 420 kPa (8,800 lbf/ft^2) **Firewater Service Complex (FWSC):** Soft: 460 kPa (9,600 lbf/ft^2) Medium: 690 kPa (14,400 lbf/ft^2) Hard: 1200 kPa (25,100 lbf/ft^2) - Minimum Shear Wave Velocity: [3] 300 m/s (1000 ft/s) - Liquefaction Potential: Seismic Category I Structures: None under footprint of Seismic Category I structures resulting from site-specific SSE. - Angle of Internal Friction (in-situ and backfill): ≥ 35 degrees - Backfill on sides of and underneath Seismic Category I structures Product of peak ground acceleration α (in g), Poisson's ratio ν and density γ: $\alpha(0.95\nu+0.65)\gamma$: 1220 kg/m^3 (76 lbf/ft^3) maximum Product of at-rest pressure coefficient k_0 and density: $k_0\gamma$: 750 kg/m^3 (47 lbf/ft^3) minimum Soil density: γ: 2000 kg/m^3 (125 lbf/ft^3) minimum
Seismology:	- SSE Horizontal Ground Response Spectra: [4] See Figure 5.1-1 - SSE Vertical Ground Response Spectra: [4] See Figure 5.1-2

Table 5.1-1
Envelope of ESBWR Standard Plant Site Parameters (continued)

Hazards in Site Vicinity:	- Site Proximity Missiles and Aircraft:	< about 10^{-7} per year
	- Volcanic Activity:	None
	- Toxic Gases:	None *
* Maximum toxic gas concentrations at the MCR HVAC intakes:	< toxicity limits	
Required Stability of Slopes:	- Factor of safety for static (non-seismic) loading	1.5
	- Factor of safety for dynamic (seismic) loading due to site-specific SSE	1.1
Maximum Settlement Values for Seismic Category I Buildings (5)		
Maximum Settlement at any corner of basemat	- Under Reactor/Fuel Building	103 mm (4.0 inches)
	- Under Control Building	18 mm (0.7 inches)
	- Under FWSC Structure	17 mm (0.7 inches)
Average Settlement at four corners of basemat	- Under Reactor/Fuel Building	65 mm (2.6 inches)
	- Under Control Building	12 mm (0.5 inches)
	- Under FWSC Structure	10 mm (0.4 inches)
Maximum Differential Settlement along the longest mat foundation dimension	- within Reactor/Fuel Building	77 mm (3.0 inches)
	- within Control Building	14 mm (0.6 inches)
	- within FWSC Structure	12 mm (0.5 inches)
Maximum Differential Displacement between Reactor/Fuel Buildings and Control Building		85 mm (3.3 inches)

Table 5.1-1
Envelope of ESBWR Standard Plant Site Parameters (continued)

Meteorological Dispersion (X/Q):	EAB X/Q:		
	0-2 hours:	2.00E-03 s/m^3	
	LPZ X/Q:		
	0-8 hours:	1.90E-04 s/m^3	
	8-24 hours:	1.40E-04 s/m^3	
	1-4 days:	7.50E-05 s/m^3	
	4-30 days:	3.00E-05 s/m^3	
* First value is for unfiltered inleakage. Second value is for air intakes (emergency and normal)	Control Room X/Q: *		
	Reactor Building		
	0-2 hours:	1.90E-03 s/m^3	1.50E-03 s/m^3
	2-8 hours:	1.30E-03 s/m^3	1.10E-03 s/m^3
	8-24 hours:	5.90E-04 s/m^3	5.00E-04 s/m^3
	1-4 days:	5.00E-04 s/m^3	4.20E-04 s/m^3
	4-30 days:	4.40E-04 s/m^3	3.80E-04 s/m^3
	Passive Containment Cooling System / Reactor Building Roof		
	0-2 hours:	3.40E-03 s/m^3	3.00E-03 s/m^3
	2-8 hours:	2.70E-03 s/m^3	2.50E-03 s/m^3
	8-24 hours:	1.40E-03 s/m^3	1.20E-03 s/m^3
	1-4 days:	1.10E-03 s/m^3	9.00E-04 s/m^3
	4-30 days:	7.90E-04 s/m^3	7.00E-04 s/m^3
	HELB Blowout Panels/Reactor Building		
	0-2 hours:	7.00E-03 s/m^3	5.90E-03 s/m^3
	2-8 hours:	5.00E-03 s/m^3	4.70E-03 s/m^3
	8-24 hours:	2.10E-03 s/m^3	1.50E-03 s/m^3
	1-4 days:	1.70E-03 s/m^3	1.10E-03 s/m^3
	4-30 days:	1.50E-03 s/m^3	1.00E-03 s/m^3
	Turbine Building		
	0-2 hours:	1.20E-03 s/m^3	1.20E-03 s/m^3
	2-8 hours:	9.80E-04 s/m^3	9.80E-04 s/m^3
	8-24 hours:	3.90E-04 s/m^3	3.90E-04 s/m^3
	1-4 days:	3.80E-04 s/m^3	3.80E-04 s/m^3
	4-30 days:	3.20E-04 s/m^3	3.20E-04 s/m^3
	Fuel Building		
	0-2 hours:	2.80E-03 s/m^3	2.80E-03 s/m^3
	2-8 hours:	2.50E-03 s/m^3	2.50E-03 s/m^3
	8-24 hours:	1.25E-03 s/m^3	1.25E-03 s/m^3
	1-4 days:	1.10E-03 s/m^3	1.10E-03 s/m^3
	4-30 days:	1.00E-03 s/m^3	1.00E-03 s/m^3

Table 5.1-1
Envelope of ESBWR Standard Plant Site Parameters (continued)

Meteorological Dispersion (X/Q): (continued)	Technical Support Center X/Q:*		
	Reactor Building		
	0-2 hours:	1.00E-03 s/m^3	1.00E-03 s/m^3
	2-8 hours:	6.00E-04 s/m^3	6.00E-04 s/m^3
	8-24 hours:	3.00E-04 s/m^3	3.00E-04 s/m^3
	1-4 days:	2.00E-04 s/m^3	2.00E-04 s/m^3
	4-30 days:	1.00E-04 s/m^3	1.00E-04 s/m^3
	Turbine Building		
	0-2 hours:	2.00E-03 s/m^3	2.00E-03 s/m^3
	2-8 hours:	1.50E-03 s/m^3	1.50E-03 s/m^3
	8-24 hours:	8.00E-04 s/m^3	8.00E-04 s/m^3
	1-4 days:	6.00E-04 s/m^3	6.00E-04 s/m^3
	4-30 days:	5.00E-04 s/m^3	5.00E-04 s/m^3
	Passive Containment Cooling System / Reactor Building Roof		
	0-2 hours:	2.00E-03 s/m^3	2.00E-03 s/m^3
	2-8 hours:	1.10E-03 s/m^3	1.10E-03 s/m^3
	8-24 hours:	5.00E-04 s/m^3	5.00E-04 s/m^3
	1-4 days:	4.00E-04 s/m^3	4.00E-04 s/m^3
	4-30 days:	3.00E-04 s/m^3	3.00E-04 s/m^3

Notes:

(1) The site parameters defined in this table are applicable to Seismic Category I, II, and Radwaste Building structures, unless noted otherwise.

(2) At the foundation level of Seismic Category I structures. The static bearing pressure is the average pressure. The dynamic bearing pressure is the toe pressure. The maximum static bearing demand is multiplied by a factor of safety appropriate for the design load combination and is compared with the site-specific allowable static bearing pressure. The maximum dynamic bearing demand is multiplied by a factor of safety appropriate for the design load combination and is compared with the site-specific allowable dynamic bearing pressure. When a site-specific shear wave velocity is between soft soil and medium soil the larger of the soft or medium maximum dynamic bearing demand will be used. When a site-specific shear wave velocity is between medium soil and hard soil the larger of the medium or hard maximum dynamic bearing demand will be used. Alternatively, for soils with a site-specific shear wave velocity a linearly interpolated dynamic bearing demand between soft and medium soil or between medium and hard soil can be used. The shear wave velocities of soft, medium and hard soils are 300 m/sec (1000 ft/sec), 800 m/sec (2600 ft/sec) and greater than or equal to 1700 m/sec (5600 ft/sec), respectively.

(3) This is the minimum shear wave velocity of the supporting foundation material and material surrounding the embedded walls associated with seismic strains for lower bound soil properties at minus one sigma from the mean. The ratio of the largest to the smallest shear wave velocity over the mat foundation width of the supporting foundation material does not exceed 1.7.

(4) Safe Shutdown Earthquake (SSE) design ground response spectra of 5% damping, also termed Certified Seismic Design Response Spectra (CSDRS), are defined as free-field outcrop spectra at the foundation level (bottom of the base slab) of the Reactor/Fuel and Control Building structures. For the Firewater Service Complex, which is essentially a surface founded structure, the CSDRS is 1.35 times the values shown in Figures 5.1-1 and 5.1-2 and is defined as free-field outcrop spectra at the foundation level (bottom of the base slab) of the Firewater Service Complex structure.

(5) Settlement values are long-term (post-construction) values except for differential settlement within the foundation mat. The design of the foundation mat accommodates immediate and long-term (post construction) differential settlements after the installation of the basemat.

(6) For sites not meeting the soil property requirements, a site-specific analysis is required to demonstrate the adequacy of the standard plant design.

(7) Tornado missiles do not apply to Seismic Category II buildings. For the Radwaste Building, the tornado missiles defined in Regulatory Guide 1.143, Table 2, Class RW-IIa apply.

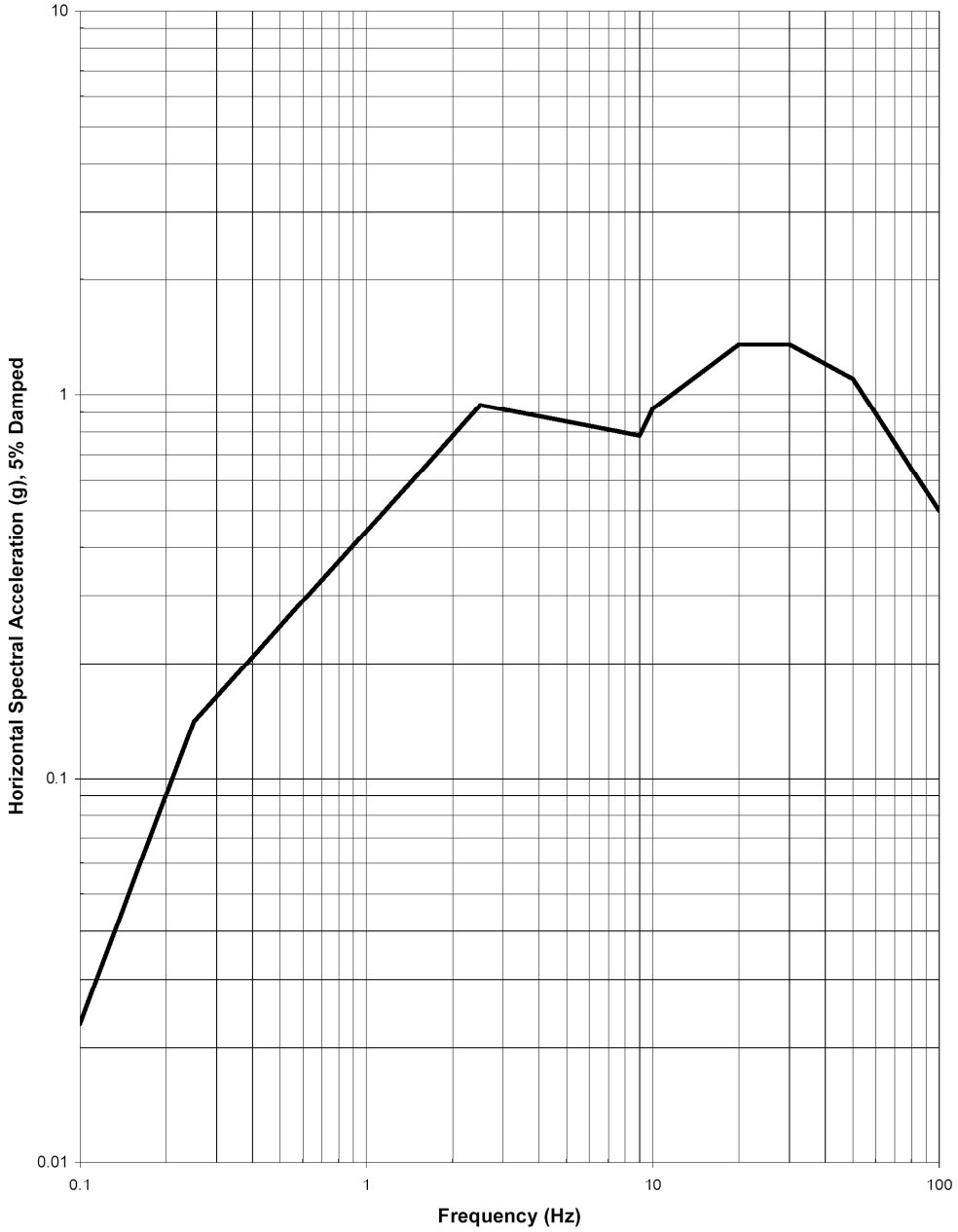

Figure 5.1-1. ESBWR Horizontal SSE Design Ground Spectra at Foundation Level

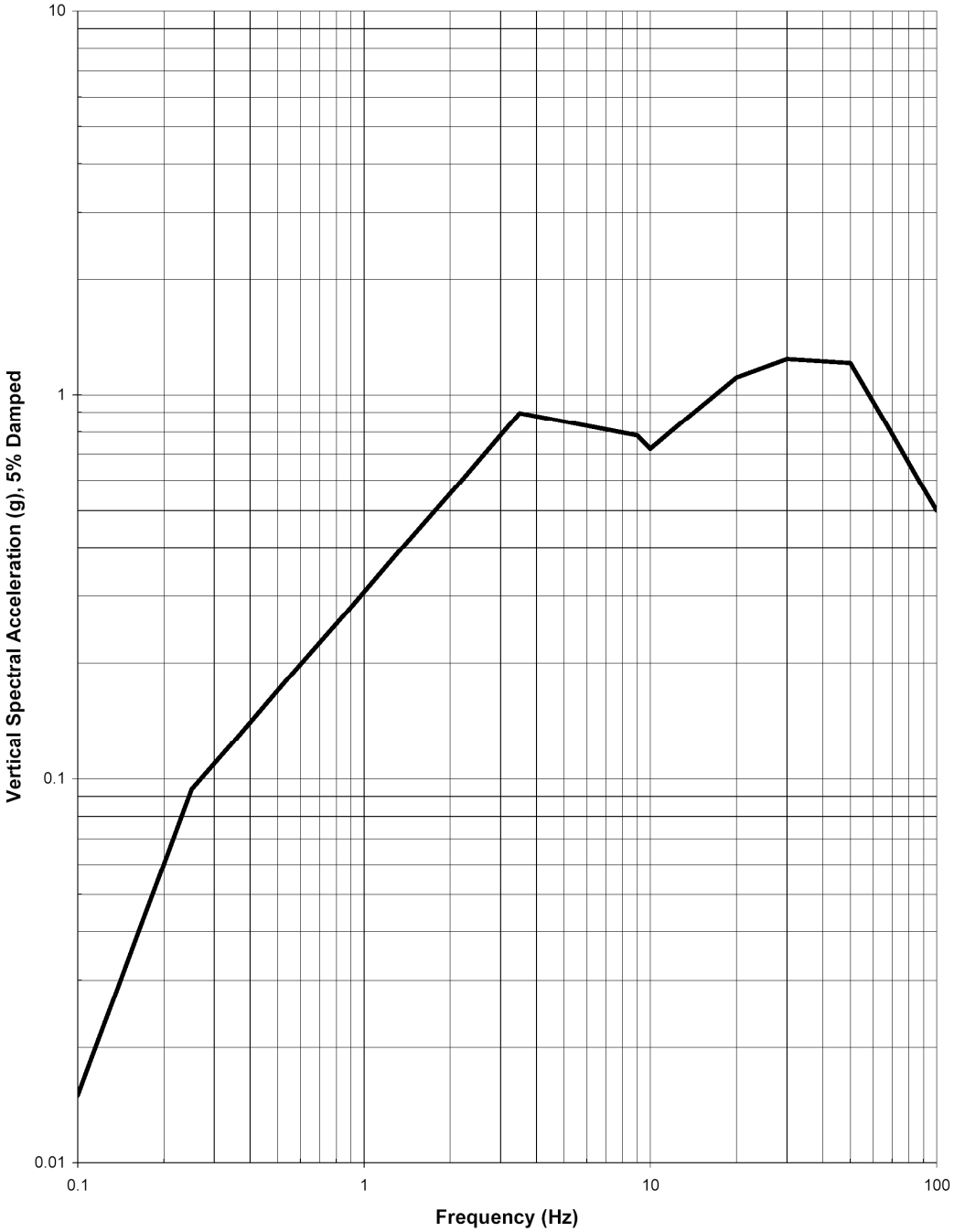

Figure 5.1-2. ESBWR Vertical SSE Design Ground Response Spectra at Foundation Level