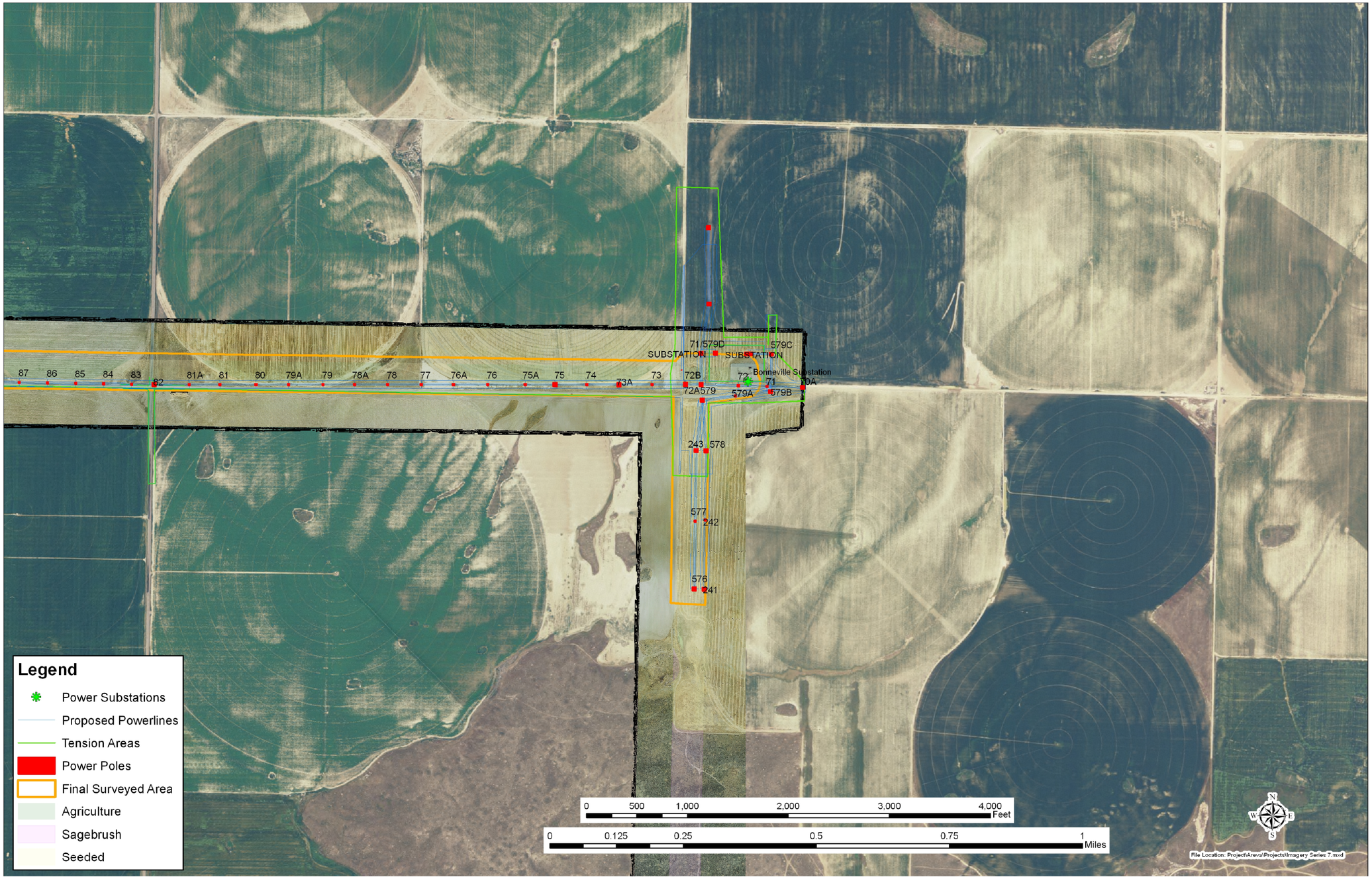

FIGURE H-1 **Rev. 2**

Land Ownership, Project Area, and Location of Existing and Proposed Substations and Proposed Transmission Route (Sheet 7 of 7)

EAGLE ROCK ENRICHMENT FACILITY ENVIRONMENTAL REPORT

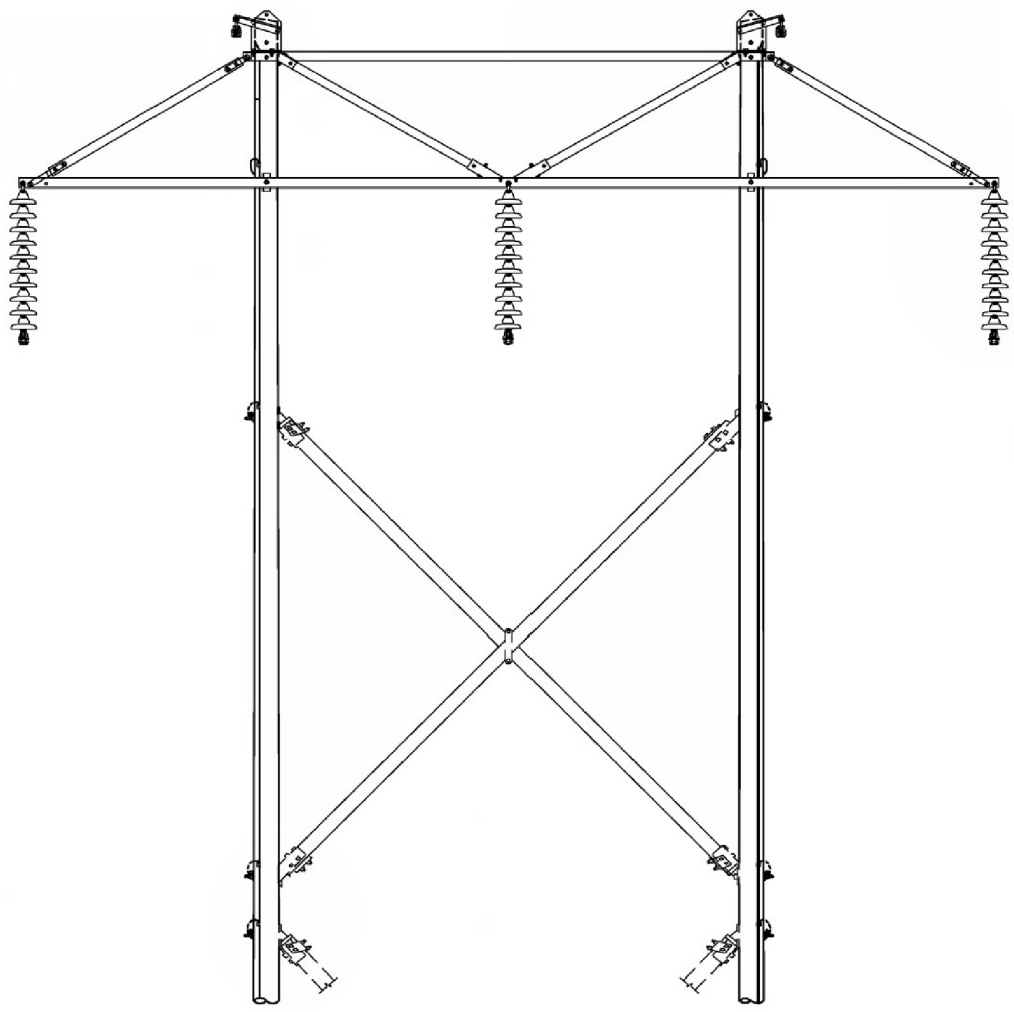

FIGURE H-2A **Rev. 2**

Typical Design of a Single-Circuit
Double Wood Pole H-Frame Structure

EAGLE ROCK ENRICHMENT FACILITY
ENVIRONMENTAL REPORT

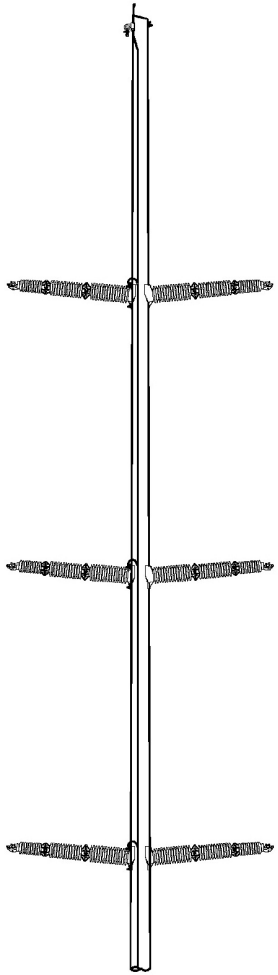

FIGURE H-2B **Rev. 2**

Typical Design of a Double-Circuit
Single Wood or Steel Pole Structure

EAGLE ROCK ENRICHMENT FACILITY
ENVIRONMENTAL REPORT

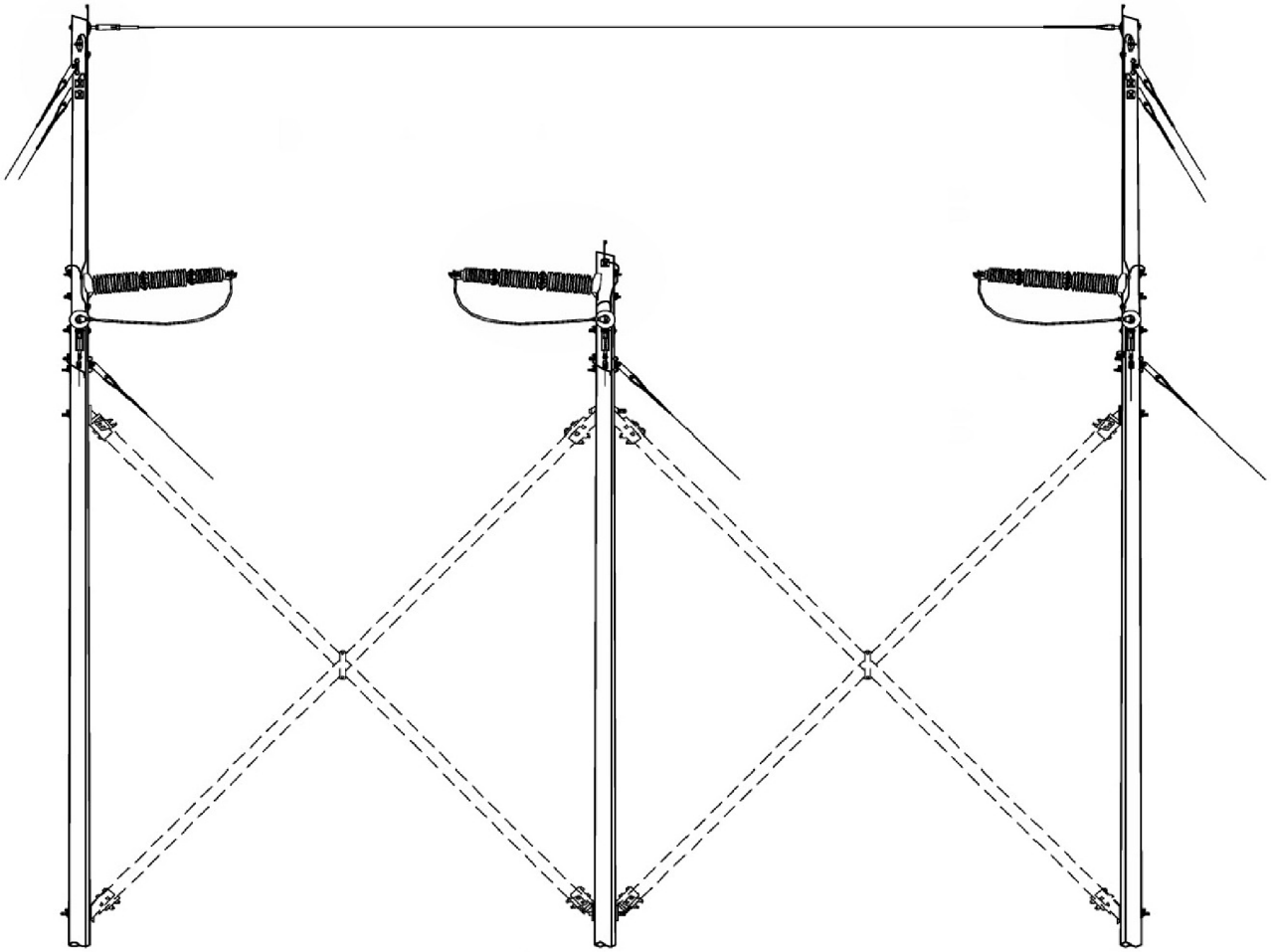

FIGURE H-2C **Rev. 2**

Typical Design of a 3-Pole
Dead-End Structure

EAGLE ROCK ENRICHMENT FACILITY
ENVIRONMENTAL REPORT

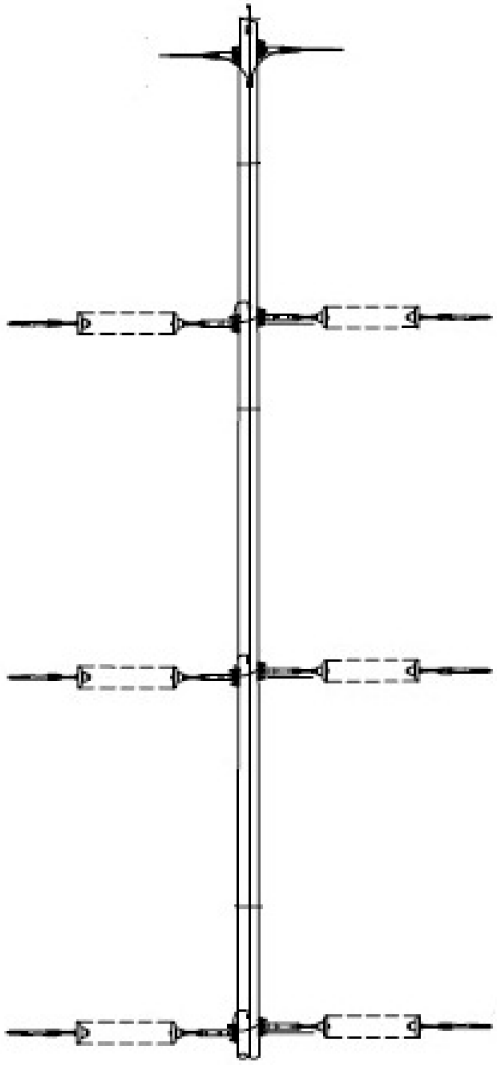

FIGURE H-2D **Rev. 2**

Typical Design for a Single-Pole
Steel Dead-End Structure

EAGLE ROCK ENRICHMENT FACILITY
ENVIRONMENTAL REPORT

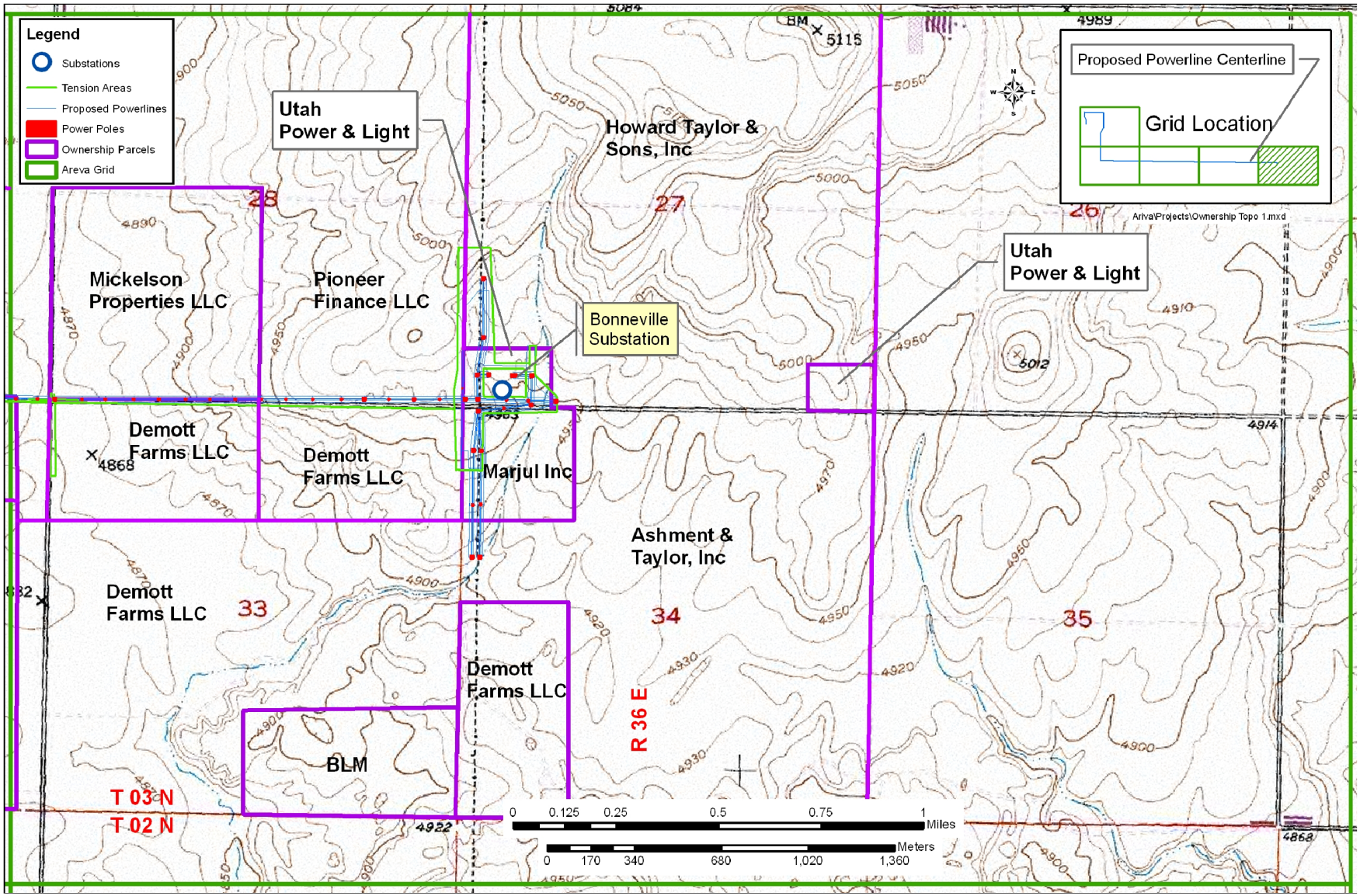

FIGURE H-3 **Rev. 2**

Private Property Ownership
(Sheet 1 of 5)

EAGLE ROCK ENRICHMENT FACILITY
ENVIRONMENTAL REPORT

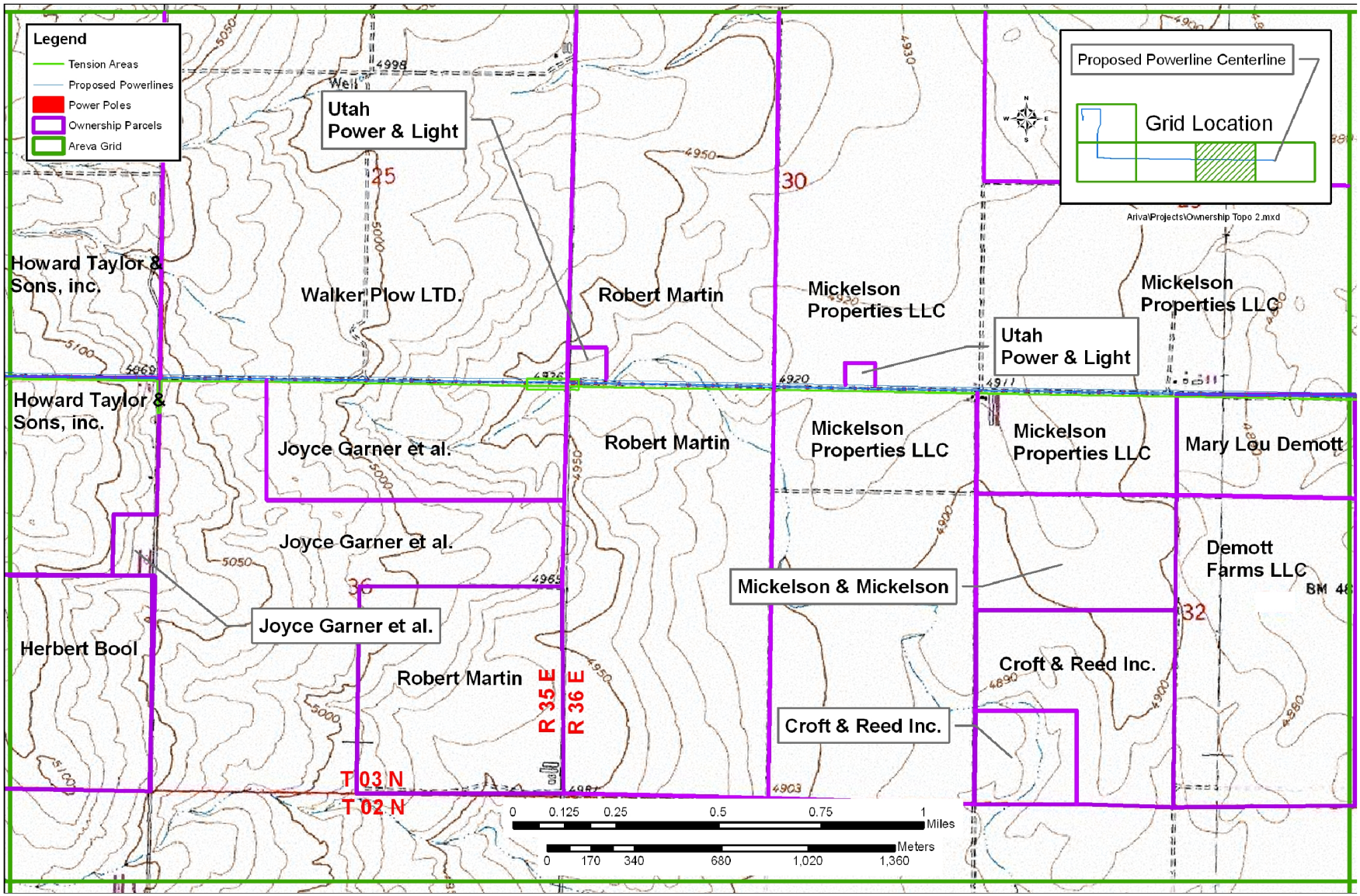

FIGURE H-3 **Rev. 2**

Private Property Ownership
(Sheet 2 of 5)

EAGLE ROCK ENRICHMENT FACILITY
ENVIRONMENTAL REPORT

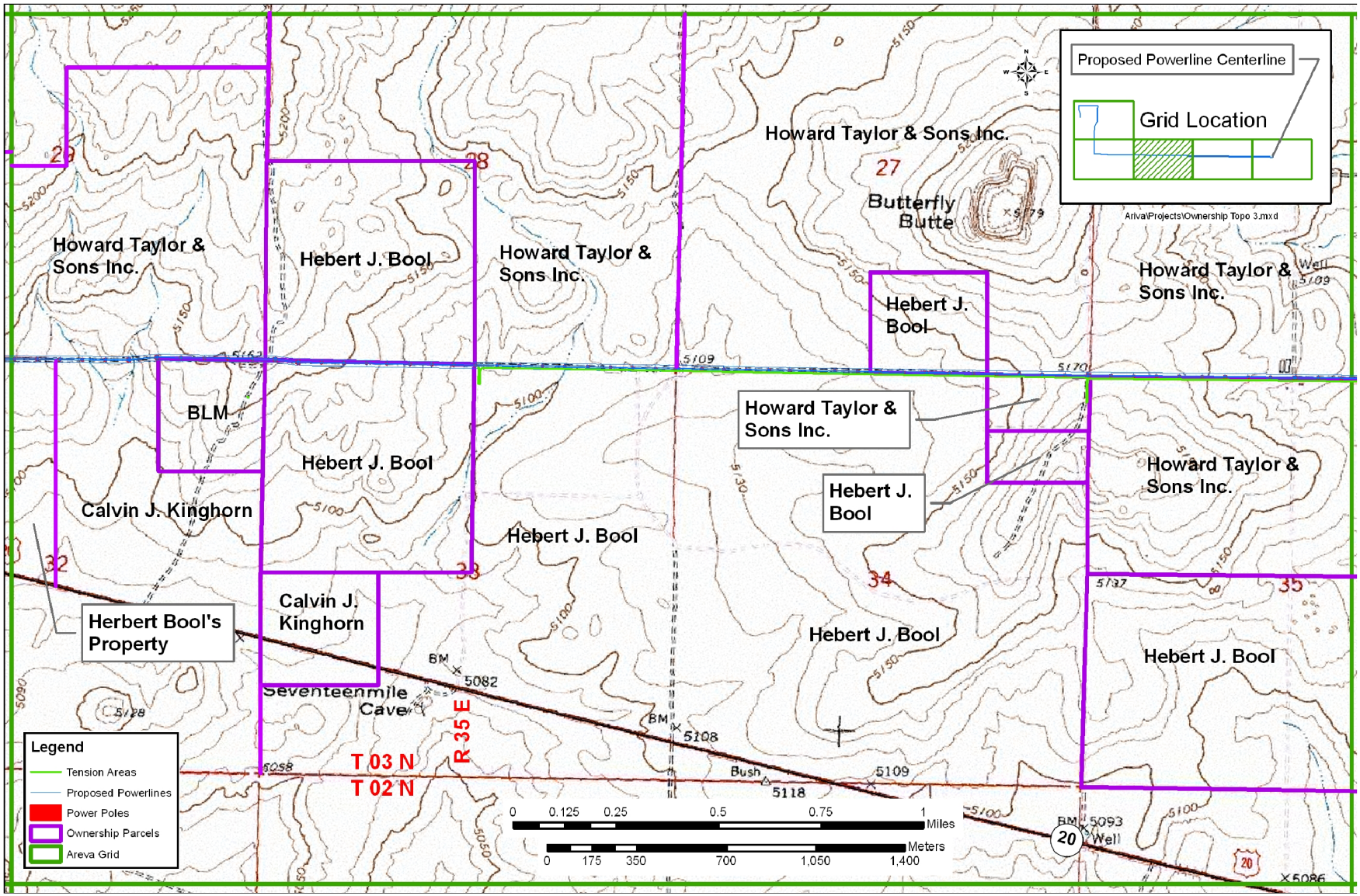

FIGURE H-3 **Rev. 2**

Private Property Ownership
(Sheet 3 of 5)

EAGLE ROCK ENRICHMENT FACILITY
ENVIRONMENTAL REPORT

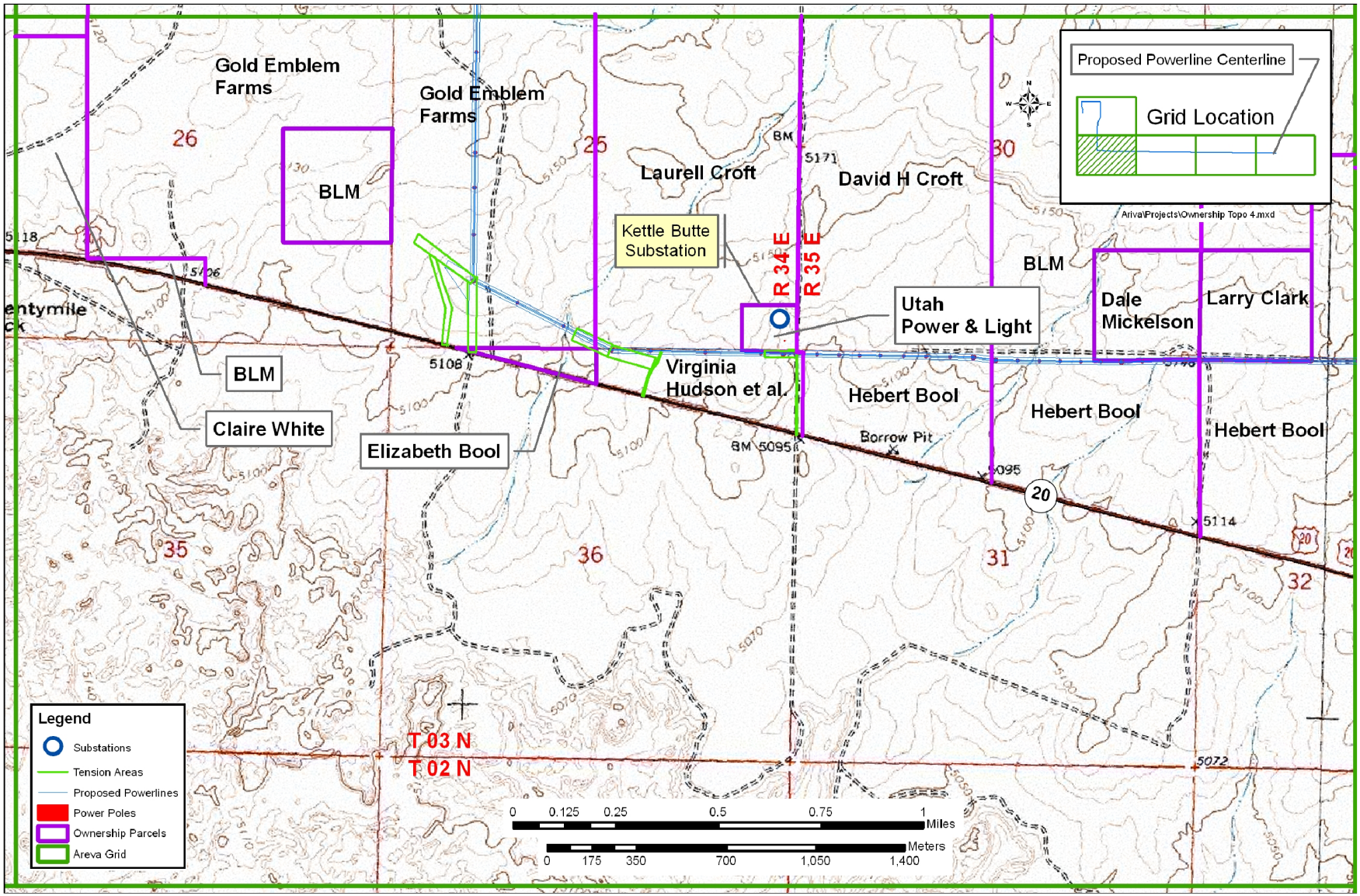

FIGURE H-3 **Rev. 2**

Private Property Ownership
(Sheet 4 of 5)

EAGLE ROCK ENRICHMENT FACILITY
ENVIRONMENTAL REPORT