urenco

May 4, 2010

LES-10-00087-NRC

Attn: Document Control Desk
Office of Nuclear Material Safety and Safeguards
U.S. Nuclear Regulatory Commission
Washington, D.C. 20555-0001

Louisiana Energy Services, LLC
NRC Docket No. 70-3103

Subject: Supplemental Information for Backfit Claim

References: Reference (a) Louisiana Energy Services's Backfit Claim Concerning Definition of Boundaries for Administrative Control IROFS (Items Relied on for Safety), dated April 16, 2010

In addition to the information and analysis provided in Reference (a), Louisiana Energy Services, LLC (LES) hereby supplements Reference (a) with this letter and the attached documents in support of LES's backfit claim concerning the definition of boundaries for Administrative Control IROFS. This supplement is intended to provide further information on three points that are essential to the NRC's evaluation of LES's backfit claim:

1. LES's approach to defining IROFS boundaries was explained to the NRC during the licensing process, including the submittal of LES's IROFS Boundary Definition procedure which was reviewed and accepted for licensing.

2. The issue of defining IROFS boundaries is part of a broader generic industry issue with the implementation of Subpart H of 10 C.F.R. Part 70 and thus should be resolved in the generic context.

3. This issue is not safety significant for the LES facility and thus should not be an impediment to startup.

As noted in Reference (a), during the licensing process, LES submitted on the docket its procedure for defining IROFS boundaries. As part of its license application, LES also submitted its Integrated Safety Analysis (ISA) Summary for the NRC's review. The ISA and ISA Summary included LES's designation of each administrative control necessary to reduce the likelihood of a credible high-consequence event as an IROFS. Recently, the NRC Staff informally notified LES that the boundary of an Administrative Control IROFS should include equipment necessary to perform the administrative operator action. With regard to the IROFS at issue, the Staff's position is that certain monitoring instruments that may be used by operations personnel as supporting equipment must be categorized as within the boundary of the IROFS. To date, LES has received a preliminary Staff paper attached in Enclosure (3), which was sent to LES via email on April 8, 2010 and on May 3, 2010, LES received its ORR Inspection Report from the NRC, which

LES, PO Box 1789, Eunice, New Mexico 88231, USA T: +1 575 394 4646 F: +1 575 394 4545 W: www.urenco.com
Copyright©2010 LES

NMSS01

urenco

indicated that the IROFS issues discussed herein have been identified by the NRC as an Unresolved Item. 1/

The Staff's position in Enclosure (3) can be characterized in one of two ways. On one hand, the Staff apparently believes that LES needs to make the Staff's informally recommended changes to comply with LES's own defined IROFS boundaries, in which case the Staff's position could arguably fall within the "compliance exception" to the backfitting rule (10 C.F.R. 70.76(a)(4)(ii)).2/ On the other hand, the Staff's position could be a change in its view on the acceptability of the IROFS boundary definitions that the NRC reviewed and approved during the licensing process for the National Enrichment Facility (NEF), in which case, the Staff's *new* position—which was only recently communicated to LES—would constitute a backfit. Because the Staff's concerns do not appear to be focused on LES meeting its own defined IROFS boundaries, but rather the concerns center on how the IROFS boundaries have been defined under LES's reviewed and approved procedure, the Staff's position falls into the latter category (*i.e.*, a backfit) and thus should not be imposed unless a backfitting analysis meeting the standards set forth in 10 C.F.R. 70.76 is performed.

LES's Approach Was Presented During The Licensing Process

LES's approach to defining IROFS boundaries was provided to the NRC during the licensing process for the NEF. As noted above and in Reference (a), the NRC reviewed LES's procedures for defining the boundary of IROFS, the ISA, and the ISA Summary as part of the licensing process. Additionally, as explained in the attached affidavits of Daniel G. Green (Enclosure (1)) and Allan J. Brown (Enclosure (2)), who were both intimately involved with the ISA and IROFS issues during the licensing process, with respect to IROFS C6 and C7, LES did not communicate the position to the NRC that the IROFS boundary included the Plant Control System (PCS) or any other mechanical enrichment control device. As Mr. Green explains, it was the position of LES *not* to credit any digital software-related systems for performance of safety functions, *i.e.*, IROFS. This position was reflected in an August 8, 2002 NRC meeting summary (Enclosure (6)) noting that LES stated, for safety-systems (*i.e.*, IROFS), that the controls are automatic and hardwired (*i.e.*, not controlled by digital software-related systems). With respect to the mechanical enrichment control device, because this instrument had to be assumed to fail in order to presuppose the possibility of a criticality event, it could not be credited as an IROFS. Rather, IROFS C6 and C7 are intended to be limited to operator actions to properly set and then monitor system performance.

With respect to IROFS 38 for cylinder weight management, Mr. Green explains that LES's approach was that the IROFS boundary would not include the station load cells. Rather, IROFS 38 was intended to be limited to proceduralized operator actions to monitor, log and trend weight measurements.

The NRC Staff's Inspection Report 2010-006 suggests that IROFS C6 and 38, as defined, were inconsistent with License Condition 20. However, License Condition 20 reflected LES's approach not to rely upon digital software-related systems. In LES's view, the NRC accepted LES's approach to the definition of IROFS boundaries in licensing the NEF. License Condition 20 reflected that LES was not relying upon digital software-related systems for performance of safety functions and the restriction of License Condition 20 was intended to apply prospectively in the event that LES were to change its approach at some time in the future. As LES has explained to the Staff, LES has not changed its approach

---

1/ IR-70-3103/2010-006 ("Inspection Report 2010-006").

2/ That is, a backfit analysis is not necessary if the Staff determines that the modification is necessary to bring the facility into compliance with existing regulatory requirements or written commitments of the licensee.

LES, PO Box 1789, Eunice, New Mexico 88231, USA T: +1 575 394 4646 F: +1 575 394 4545 W: www.urenco.com

Copyright©2010 LES

urenco

to the definition of IROFS boundaries. LES has continued to implement the approach reflected in its IROFS boundary definition procedure that was reviewed and approved by the NRC as part of the licensing process.

The additional information provided by this letter, in addition to demonstrating that the equipment at issue should not be included in the IROFS boundary, further counters the Staff's position, as stated in bullets on the last page of Enclosure (3), that IROFS C6 and 38 require the use of instrumentation/controls/devices, along with operator action, to accomplish the safety function and that they are not accurately characterized in the ISA Summary because LES claims that they are administrative (as opposed to administrative with use of instrumentation/controls/devices). As explained in LES's backfit claim (Reference (a), Attachment page 3) and evidenced in Mr. Green's affidavit, the safety functions identified in the IROFS are solely operator based, and do not include the instrumentation/controls/devices as the Staff claims.

Additionally, as demonstrated in LES's response to an NRC Request for Additional Information (RAI) during the licensing proceeding, LES more generically addresses design features. When the NRC requested in RAI ISA-45 that LES "[c]larify whether it was your intent to rely upon the design of your facility in the license application in lieu of designating IROFS for components/equipment when evaluating accident sequences for compliance with 10 CFR 70.61," LES responded: "[d]esigns that inherently preclude 'credible' events of consequence would not be identified as IROFS." *See* Enclosure (8).

The IROFS Boundary Issue Represents A Generic Industry Issue

The Staff's position in Enclosure (3) also reflects a broader issue between the fuel cycle industry and the NRC regarding the implementation of various concepts in Part 70, Subpart H. As indicated in Enclosure (4), the Nuclear Energy Institute (NEI) has transmitted a letter to the NRC on ISA bounding functions and design features (which relates directly to defining IROFS boundaries). NEI notes that since Subpart H was added to 10 C.F.R. Part 70 in 2000, the fuel cycle industry has been successfully developing NRC-approved ISA plans, performing the ISA work and submitting ISA summaries to the NRC for its review and maintaining the IROFS identified by the ISA. In general, in the last 10 years there have been no major problems identified during the licensing phase for a fuel cycle facility and the NRC has approved all ISA plans and accepted the ISA summaries for the operating facilities. However, as NEI notes:

> Beginning in late 2008, the NRC Inspection, Enforcement, and Licensing teams began questioning ISA records at fuel facilities, and problems began to be identified as violations/potential violations at most of the operating fuel facilities. The violations center around the definition for certain concepts that are implicit in Part 70 and necessary for the practical and effective functioning of Part 70, but which are not explicit in the regulations or clearly defined in applicable guidance, i.e., the concepts of "Bounding Assumptions" and "Design Features" relative to their relation to "structures, systems, components and administrative actions" which in some cases constitute IROFS as is currently defined in the regulation. Also within licensing space, the Staff has rejected ISA determinations made consistent with the approved methodologies and approved ISAs for new licensing actions that are incongruent, that is disallowing ISA results with recognition of Design features/Bounding assumptions vs. declared IROFS. Nothing has changed at the facilities in terms of the manner in which the work was performed, the manner in which the IROFS have been implemented, the documented basis of safety (ISA/ISA Summary) or the manner in which the safety programs are managed at the facilities.

Copyright©2010 LES

urenco

> The only change has been in the NRC function and personnel evaluating the implementation of the regulations.

Enclosure (4), Attachment at 1-2. Thus, the Staff's latest issues with LES are not unique to LES, but rather appear to reflect a recent change in perspective on the NRC's interpretation of Subpart H. Moreover, that new Staff interpretation could result in the need to include many items, including the PCS, within the IROFS boundaries for any fuel cycle facilities. It is precisely for this reason – to protect a licensee from the severe impacts arising from imposition of new regulatory staff positions based on evolving perspectives of the NRC regulations – that the NRC implemented the backfit rule in Part 70. 3/ Because the issue here is part of a broader generic issue, it should be addressed and resolved in that generic context rather than LES's specific case.

The Staff's Concerns Lack Safety Significance

The issues raised by the NRC are of low or limited safety significance and therefore the resolution of the Staff's concerns should not impact LES's imminent startup date. 4/ In all of LES's communications with the Staff, including the information contained in Enclosure (3) and IR-70-3103/2010-006, the Staff has not identified that its IROFS concerns are of safety significance.

On the contrary, as explained in Reference (a) and further evidenced in the attached documents, the matters identified by the Staff are of low or limited safety significance. For Administrative Control IROFS, operations personnel have alternative means to achieve operational control and considerable time – ranging from several hours to several days – to accomplish the required actions. For example, in the attached affidavit of Mr. Green, he cites the QA Level 2 Examples discussion of Load Cell (Takeoff Stations). With respect to IROFS 38 for cylinder weight management, the Examples provide:

> IROFS38 is not specific with regard to the device used to verify cylinder weight. The intent of IROFS38 is to provide preventative protection for ensuring that the overfilling of a cylinder does not go undetected. IROFS38 ensures that the operations staff observes the fill trend of the cylinder. The accurate weight of the cylinder is not particularly relevant. Operator training and experience and the procedural control to check once per shift are relied on to ensure that the cylinder is filling properly. If the associated load cell to be used to perform IROFS38 were to become inoperable, other means are available to determine the weight. As such, the load cell used to perform IROFS38 is not required to be designated as IROFS and therefore is not required to be QA Level 1.

Enclosure (5), emphasis added. Thus, as shown in Enclosure (5), the operator is looking for a trend in weight variations, *i.e.*, whether the weight is increasing or decreasing, and a precise measurement of the weight of the cylinder at a point in time is not particularly relevant. Failure of the load cell in such a manner that it provides a false weight trend is highly unlikely. Additionally, operators are directed by procedure to cease cylinder filling upon detection of a failed weight indicator.

3/ ***See*** **Final Rule, 65 Fed Reg. 56211,56218 ("[t]he Commission agrees that regulatory stability and certainty can be improved by establishing a backfit provision for fuel cycle facilities covered by Subpart H of the final rule.")**

4/ As noted above, on May 3, 2010, LES received its ORR Inspection Report from the NRC, which indicated that the IROFS issues discussed herein have been identified by the NRC as Unresolved Items. ***See*** **Inspection Report 2010-006.**

Copyright©2010 LES

urenco

Further, the IROFS at issue are administrative IROFS that direct an operator to take action to stop operations if monitoring equipment does not work, thus further minimizing the safety significance of the equipment of concern to the Staff.

In sum, the discussion above and the attached documents further demonstrate that the NRC staff is seeking to reinterpret not only LES's licensing basis, but arguably Subpart H as well. LES, therefore, respectfully urges the Commission to carefully evaluate and consider this supplemental information before responding to the April 16, 2010 letter (Reference (a)). Taking this information into consideration before responding will support the underlying policy articulated in NUREG-1409 of assuring that NRC makes sound decisions, based on reasoned analysis, on potential backfit issues.

URENCO USA appreciates the efforts of the NRC staff in supporting the review this submittal in a timely manner. We look forward to your prompt attention to this submittal; should you have any questions regarding this letter, please contact me at 575.394.5206 or Gary Sanford, LES Director of Quality and Regulatory Affairs at 575.394.5407.

Sincerely,

for Gregory OD Smith
Chief Operating Officer and Chief Nuclear Officer

Enclosures:

1) Affidavit of Daniel G. Green in Support of Louisiana Energy Services's Supplemental Information for Backfit Claim.

2) Affidavit of Allan J. Brown in Support of Louisiana Energy Services's Supplemental Information for Backfit Claim.

3) Staff's "IROFS Discussion," emailed to Louisiana Energy Services on April 8, 2010.

4) NEI Letter to the NRC re: Industry Consensus Paper and Second Public Meeting on Design Features, dated January 22, 2010, with Attachment, "Integrated Safety Analysis Bounding Assumptions and Design Features."

5) QA Level 2 Examples, emailed to the NRC on March 9, 2004, ADAMS Accession Nos. ML040860202 and ML040860203.

6) August 8, 2002 Meeting Summary: Louisiana Energy Services Pre-Application Meeting for Instrumentation and Controls and Integrated Safety Assessment, dated August 13, 2002, ADAMS Accession No. ML022250407.

LES, PO Box 1789, Eunice, New Mexico 88231, USA T: +1 575 394 4646 F: +1 575 394 4545 W: www.urenco.com
Copyright©2010 LES

urenco

7) NEF Safety Analysis Report (December 2003), Table 3.7-2.

8) RAI ISA-45 and LES's Response (May 19, 2004), ADAMS Accession No. ML043550096.

LES, PO Box 1789, Eunice, New Mexico 88231, USA T: +1 575 394 4646 F: +1 575 394 4545 W: www.urenco.com
Copyright©2010 LES

cc:

Michael Weber
Director, Office of Nuclear Material
Safety and Safeguards
Mail Stop EBB1
U.S. Nuclear Regulatory Commission
Washington, D.C. 20555-0001

Catherine Haney
Deputy Director, Office of Nuclear
Material Safety and Safeguards
Mail Stop EBB1
U.S. Nuclear Regulatory Commission
Washington, D.C. 20555-0001

Daniel H. Dorman
Director, Division of Fuel Cycle Safety
and Safeguards
Mail Stop E2C40M
U.S. Nuclear Regulatory Commission
Washington, D.C. 20555-0001

Mike D. Tschiltz
Deputy Director, Fuel Facility Licensing
Directorate
Office of Nuclear Material Safety and
Safeguards
6003 Executive Blvd.
Rockville, MD 20852

Brian W. Smith
Chief, Enrichment and Conversion
Branch
Office of Nuclear Material Safety and
Safeguards
6003 Executive Blvd.
Rockville, MD 20852

Tyrone D. Naquin, Project Manager
Two White Flint
Mail Stop EBB2-C40M
11545 Rockville Pike
Rockville, MD 20852-2738

Anthony T. Gody
Deputy Director, Construction Projects,
Region II
Sam Num Atlanta Federal Center,
23 T85
61 Forsyth Street, SW Atlanta, GA
30303-8931

Deborah A. Seymour
Chief, Construction Projects Branch 1,
Region II
Sam Nunn Atlanta Federal Center,
23 T85
61 Forsyth Street, SW
Atlanta, GA 30303-8931

Jay L. Henson
Chief, Fuel Facility Branch 2, Region II
Sam Num Atlanta Federal Center,
23 T85
61 Forsyth Street, SW
Atlanta, GA 30303-8931

ENCLOSURE (1)

Affidavit of Daniel G. Green in Support of Louisiana Energy Services's Supplemental Information for Backfit Claim

LOUISIANA ENERGY SERVICES, LLC
NRC DOCKET NO. 70-3103

AFFIDAVIT OF DANIEL G. GREEN IN SUPPORT OF LOUISIANA ENERGY SERVICES'S SUPPLEMENTAL INFORMATION FOR BACKFIT CLAIM

Daniel G. Green, being duly sworn, does hereby state as follows:

1. I worked with Louisiana Energy Services (LES) on the National Enrichment Facility (NEF) project in January 2003 and from August 2003 to April 2006. I served in many roles on the project; however, my primary function was Licensing Lead during this time period. I left LES just prior to the Nuclear Regulatory Commission (NRC) issuing the materials license for the NEF in June 2006.

2. By way of background, LES submitted a license application to construct and operate the NEF in December 2003. During the NRC's review of LES's application for the NEF, the agency reviewed and approved LES's Integrated Safety Analysis (ISA) Summary in its Safety Evaluation Report, NUREG-1827, which was issued in June 2005. In the ISA Summary, LES identified as items relied on for safety (IROFS) administrative controls that are relied on to prevent potential accidents at the NEF that could exceed the applicable performance criteria of 10 C.F.R. 70.61.

3. During my time at LES, I worked on the preparation and submittal of the ISA Summary and was involved in meetings and discussions with the NRC staff during its review of the ISA Summary. As a result, I am intimately familiar with the representations made to the NRC during its review of the ISA Summary, and discussions concerning the NRC's review of the administrative control IROFS.

4. Relative to the definition and application of boundaries of IROFSC6 and C7 for enrichment control and monitoring, to the best of my knowledge and recollection it was not the LES approach or position for licensing, nor was it communicated to the NRC, that the IROFS boundary included the Plant Control System (PCS) or any mechanical enrichment control device. With respect to the PCS, the LES approach/position for licensing was to not credit any digital software-related systems for performance of safety functions (i.e., IROFS). This approach/position is reflected in the NRC meeting summary entitled "August 8, 2002 Meeting Summary: Louisiana Energy Services Pre-Application Meeting for Instrumentation and Controls and Integrated Safety Assessment," dated August 13, 2002 (ADAMS Accession No. ML022250407). In that meeting, LES representatives stated that for safety systems (i.e., IROFS), the controls are automatic and hardwired (i.e., not controlled by digital software-related systems). This position was reflected in License Condition 20 of the NEF Materials License issued by the NRC in June 2006, which shows that the NRC understood LES's approach to the design of IROFS by noting that "[c]urrently, there are no IROFS that have been specified as using [digital software-related systems]."

5. With respect to the mechanical enrichment control device, in Accident Sequence EC3-1 (from Table 3.7-2 of the SAR dated December 2003 for example), the device had to be assumed to fail in order for the possibility of a criticality event to exist. As a result, the mechanical enrichment control device could not be credited as an IROFS. IROFSC6 and C7 were intended to be limited to operator actions to properly set and then monitor system performance. The basis for this approach/position, which I reviewed and helped develop, was a qualitative argument that failure subsequent to proper setting, with a concurrent failure to monitor enrichment levels, was not credible. This basis was summarized in the NEF Safety Analysis Report (see Table 3.7-2 of the SAR from December 2003 for example).

6. Relative to the definition and application of the boundary for IROFS38 for cylinder weight measurement, to the best of my knowledge and recollection it was not the LES approach or position for licensing, nor was it communicated to the NRC, that the IROFS boundary included the station load cells. IROFS38 was intended to be limited to operator actions to monitor, log and trend weight measurements. This is supported by the LES response to an NRC question regarding examples of QA Level 2 components. The NRC question was raised during their review of the LES Quality Assurance Program Description. In the LES response (provided by email to the NRC - refer to ADAMS Accession Nos. ML040860202 and ML040860203), the station load cells were included as an example of QA Level 2 components (i.e., non-IROFS).

7. The above licensing approaches/positions were based on the status of the facility and IROFS designs as they existed at the time of licensing. Due to the status of the facility design, LES developed and submitted the IROFS Boundary Definition procedure to the NRC to describe the process that would be utilized to define the boundaries of each of the IROFS. LES submitted the IROFS Boundary Definition procedure to the NRC for review by correspondence dated May 19, 2004 (ML042950558). Based on its review of the procedure and other information available at the time, the NRC approved LES's approach to defining IROFS boundaries in its Safety Evaluation Report for licensing (NUREG-1827). The requirement to utilize the IROFS Boundary Definition procedure was reflected in License Condition 19 of the NEF Materials License issued by the NRC in June 2006.

8. In addition, due to the status of the facility design, LES made commitments to an update process for the ISA. The purpose of this update process was to capture and address the impact of changes to the facility on the ISA and the associated IROFS as the NEF design was further developed and finalized. As a result, any required changes to the original licensing approaches/positions discussed above should have been addressed in accordance with these NEF license requirements and commitments.

9. I have provided the information contained in this affidavit and I hereby certify that the foregoing is true and correct to the best of my knowledge, information and belief.

Daniel G. Green

Subscribed and sworn to before me
This 3rd day of May, 2010

PATRICIA G. SMITH
STATE OF TENNESSEE NOTARY PUBLIC
HAMILTON COUNTY

Notary Public

My commission expires: October 16, 2012

ENCLOSURE (2)

Affidavit of Allan J. Brown in Support of Louisiana Energy Services's Supplemental Information for Backfit Claim

LOUISIANA ENERGY SERVICES, LLC
NRC DOCKET NO. 70-3103

AFFIDAVIT OF ALLAN J. BROWN IN SUPPORT OF LOUISIANA ENERGY SERVICES'S SUPPLEMENTAL INFORMATION FOR BACKFIT CLAIM

Allan J. Brown, being duly sworn, does hereby state as follows:

1. I am currently serving as the Enrichment Technology Corporation (ETC) Design Manager on the Louisiana Energy Services (LES) National Enrichment Facility (NEF) project. I first started on the project in 2000.

2. During the period just prior to LES's receipt of its materials license for the NEF in June 2006, I participated in a number of Integrated Safety Analysis (ISA) Team meetings and presentations to the Nuclear Regulatory Commission (NRC), which covered the development of the facility design. During these meetings, we discussed the items relied on for safety (IROFS) that were described in the ISA Summary.

3. Regarding the definition and application of the boundaries of IROFSC6 and C7 for enrichment control and monitoring, to the best of my knowledge and recollection it was not communicated to the NRC that the IROFS boundary would include the Plant Control System (PCS) or any mechanical enrichment control device. I participated in both the ISA meetings on these IROFS and the March 2004 classified presentation to the NRC at the URENCO Almelo site. The IROFS was limited to operator actions to properly set and then monitor system performance. The basis for this approach was a qualitative analysis that failure subsequent to proper setting leading to criticality was not credible.

4. I have provided the information contained in this affidavit and I hereby certify that the foregoing is true and correct to the best of my knowledge, information and belief.

Allan J. Brown
Allan J. Brown

Subscribed and sworn to before me
This 3 day of May 2010
Deborah Sonnamaker
Notary Public

My commission expires: 11-30-10

OFFICIAL SEAL
DEBORAH SONNAMAKER
Notary Public
State of New Mexico
My Commission Expires 11-30-10

ENCLOSURE (3)

NRC Staff's "IROFS Discussion"

IROFS Discussion

NUREG – 1520, Ch. 3.3.4.3.2(6)

a. All Items: The primary function of the list describing each IROFS is to document the safety basis of all processes in the facility. This list assists in ensuring that the items are not degraded without a justifying safety review. Thus, the key feature of this list is that all IROFS are included. To be acceptable, no item, aspect, feature, or property of a process that is needed to show compliance with the safety performance requirements of the regulation may be left off this list. IROFS may be hardware with a dedicated safety function or hardware with a property that is relied on for safety. Thus, IROFS may be the dimension, shape, capacity, or composition of hardware. The ISA Summary need not provide a breakdown of hardware IROFS by component or identify all support systems. However, the ISA documentation maintained onsite, such as system schematics and/or descriptive lists, should contain sufficient detail about items within a hardware IROFS, such that it is clear to the reviewer(s) and the applicant, what structure, system, equipment, or component is included within the hardware IROFS' boundary and would, therefore, be subject to management measures specified by the applicant. Some examples of items within a hardware IROFS are detectors, sensors, electronics, cables, valves, piping, tanks, dykes, etc. In addition, ISA documentation should also identify essential utilities and support systems on which the IROFS depends to perform its intended function. Some examples of these are backup batteries, air supply, steam supply, etc. In some processes, the frequency of demands made on IROFS must be controlled or limited to comply with 10 CFR 70.61. In such processes, whatever features are needed to limit the frequency of demands are themselves IROFS.

The level of detail in describing the IROFS in the ISA Summary is also important. It would be acceptable to describe the IROFS at the system level if that is sufficient to demonstrate compliance with the performance requirements. Section 70.65(b)(6) of 10 CFR states that IROFS should be described "in sufficient detail to understand their functions in relation to the performance requirements." It is important that the description be sufficiently detailed to identify all attributes of the IROFS that can affect its likelihood of failure, as well as everything that is within the boundary of the IROFS. It may not be necessary to specify the model number or exact design of a pump if the only attribute relied on to meet the performance requirement is the pumping capacity or oil reservoir volume. It may be sufficient to describe the pump as "centrifugal pump limited to less than 10 liters oil." *The IROFS boundary includes everything necessary for the IROFS to perform its intended safety function. For example: (1) the boundary of an enhanced administrative IROFS includes all instrumentation (sensors, annunciators, circuitry, any controls activated by the operator, etc.) relied on to trigger the operator action; (2) the boundary of a simple administrative control includes the equipment necessary to correctly perform the action; and (3) the boundary of an active engineered control includes the attendant instrumentation, sensors, essential utilities, and any auxiliary equipment needed to perform its safety function. The reliability and availability qualities*

of every component within the IROFS boundary must be considered in evaluating the total IROFS likelihood.

LES IROFS Boundary Definitions, EG-3-3100-02, Rev. 0, effective 6/6/2008

Step 5.1.5

5.1.5 Interface with responsible Design or Document Preparation Personnel in developing accurate descriptions of details for IROFS and item(s) that affect the function of IROFS or SBD Components as specified in the following attachments, as appropriate, according to identified IROFS Bin:

- Attachment 2, Bin 1– Active Engineered Controls (AEC) IROFS
- Attachment 3, Bin 2– Passive Engineered Controls (PEC) IROFS
- Attachment 4, Bin 3– Administrative Control (AC) IROFS
- Attachment 5, Bin 4– Safe-by-Design Components

Attachment 4, Bin 3– Administrative Control (AC) IROFS

GENERAL INFORMATION AND INSTRUCTIONS

1. BIN 3–A procedurally required or prohibited human action.
2. Basis for establishing boundaries for ACIROFS is derived from NEF SAR Chapter 11 requirements for procedures. Specifically, all activities involving IROFS are required to be conducted in accordance with approved procedures. These procedures are intended to provide pre-planned method of conducting operations of systems in order to eliminate errors due to on-the-spot analysis and judgments. These procedures are also required to be sufficiently detailed such that qualified individuals can perform required functions without direct supervision.
3. Since safety function of this type of IROFS may be satisfied using both procedures and hardware, basis for establishing IROFS boundaries may also involve methods used for Active Engineered Controls (AEC)IROFS (Attachment3, Bin2– passive Engineered Controls (PEC) IROFS)and/or Safe by Design (SBD) IROFS (Attachment 5, Bin4–Safe-by-Design Components).

SECTION 3, DESIGN AND OTHER FUNCTIONAL ATTRIBUTES

1. Consider AND address each of the following attributes (Safety and Support Functions) as attributes apply to accident sequences IROFS mitigates.
2. IF an attribute is not required, THEN provide basis/justification with discussion, as required for clarity, as to why attribute is not required.

Support Functions
a. Instrumentation
1. IF instrumentation is required to support performance of IROFS safety function, THEN identify associated instrumentation.
b. Controls
1. IF controls are required to support performance of IROFS safety function, THEN identify associated controls.

e. Parameter Monitoring Instrumentation/Device(s)

1. Identify M&TE to be used for monitoring IROFS parameter(s) including specific information demonstrating M&TE meets the following considerations.
2. Instrumentation or device(s) used to measure specific parameter(s) identified in Administrative IROFS for Parameter Monitoring shall meet QA Level 1 M&TE requirements.
3. As such, these instrument(s) or device(s) shall meet requirements specified in LES QAPD for M&TE.
4. Type, range, accuracy, and tolerance associated with M&TE shall be sufficient for determining that parameter(s) required to be monitored by IROFS are within specified limits.
5. In accordance with LES QAPD, M&TE shall be calibrated and adjusted, as needed, at specified periods to maintain accuracy within necessary limits.
6. In addition, M&TE shall be properly handled and stored to maintain accuracy.

SECTION 6, BOUNDARY DOCUMENTATION

1. Using information developed in items above, the following documents, as applicable, shall be annotated to indicate IROFS Boundary for each IROFS (hardware portion).
• Piping and Instrument Diagrams (P&IDs)
• Process Flow Diagrams
• System Trip and Alarm List
• Electrical Schematics
• Control Logic Definition
• Calibration Data Sheets
• Setpoint Calculations
• Specifications
• Design Bases Documents
• Equipment Arrangement Drawings
2. Using information developed in items above, for each IROFS (hardware portion), list shall be developed and maintained of all components (e.g., detectors, sensors, electronics, wiring, cabling, piping, valves, tanks, etc.) required to satisfy IROFS safety function, including required IROFS support functions.
3. Components shall be identified by tag number, unique ID number, etc.
4. Using responses to items above, develop the following documents which shall be annotated to indicate IROFS Boundary (i.e., identify which documents or portions of documents, are used to satisfy requirements of associated administrative IROFS requiring use of components)for each administrative IROFS:
• Procedures
• Lesson Plans
5. Using information developed in items above, for each administrative IROFS, list shall be developed and maintained of all procedures (by title and number) and lesson plans required to satisfy IROFS safety function, including required IROFS support functions.
6. Procedures and lesson plans shall be identified by unique ID number.
7. For AC IROFS using components, include required IROFS support functions.
8. For AC IROFS for parameter monitoring, list shall be developed and maintained for all instrument(s) or device(s) that satisfy LES QAPD requirements for M&TE for each AC IROFS for Parameter Monitoring. Instrumentation or device(s) shall be identified by tag number, unique ID number, etc.
9. Response to items above shall be documented for each AC IROFS.

LES Safety Analysis Report, Rev. 24

Section 3.2.3.2

The definition of "not credible" is also taken from NUREG-1520. If an event is not credible, IROFS are not required to prevent or mitigate the event. The fact that an event is not "credible" must not depend on any facility feature that could credibly fail to function. One cannot claim that a process does not need IROFS because it is "not credible" due to characteristics provided by IROFS. The implication of "credible" in 10 CFR 70.61 (CFR, 2003c) is that events that are not "credible" may be neglected.

Section 3.2.3.3

The risk indices can initially be used to examine whether the consequences of an uncontrolled and unmitigated accident sequence (i.e., without any IROFS) could exceed the performance requirements of 10 CFR 70.61 (CFR, 2003c). If the performance requirements could be exceeded, IROFS are designated to prevent the accident or to mitigate its consequences to an acceptable level.

LES ISA Summary, Rev. 14

IROFSC6

Administratively calculate and set the cascade enrichment control device in accordance with the calculation to ensure 235U enrichment < 5 % to ensure subcriticality within the designed process and analyzed activities. This is implemented by ensuring the calculation performed accurately, and the associated cascade enrichment control device setting is implemented in accordance with the calculation. The 5 % limit is based on the NEF Materials License limit and consistent with the Nuclear Criticality Safety Analyses to ensure subcriticality within the designed process and analyzed activities. If the acceptance criterion is not met and the cascade enrichment control device setting has not been changed, then the cascade enrichment control device setting shall not be changed. If the acceptance criterion is not met and the cascade enrichment control device setting has been changed, then the associated cascade shall be isolated such that no additional UF6 can enter or exit the cascade.

IROFSC6 Basis for Enhanced FPIN

The enhanced (i.e., Index of "-3") administrative control to calculate and set the cascade enrichment control device in accordance with the calculation to ensure 235U enrichment 5 W% to ensure subcriticality within the designed process and analyzed activities is based on the following factors:

Exceeding the 235U enrichment license limit of 5 W% will be precluded by independent verification of the cascade enrichment control device setting calculation prior to changing the cascade enrichment control device setting and independent verification of implementation of the enrichment control device setting within 1 hour after changing the cascade enrichment control setting. This enhancement shall meet the requirements for independent verification identified in Section 3.8.1.

NRC Understanding of Operation of IROFSC6

1. first operator runs CASCAL to determine settings
2. second operator runs CASCAL to determine settings and compare with first
3. first operator enters settings in to PCS
4. second operator compares settings in PCS and makes them active
5. PCS passes the settings to PLCs which monitor and maintain the settings by manipulating valves, monitoring is performed on valve locations and pressures

IROFS38

Administratively limit the cylinder fill mass to ensure cylinder integrity. This is implemented at Tails Low Temperature Take-off Stations, Feed Purification Low Temperature Take-off Stations, Product Low Temperature Take-off Stations, and Product Blending Receiver Stations by verifying that cylinder weight is within specified trending limits once per shift during filling of the cylinder. Weight limit conservative with respect to assuring cylinder integrity. If the acceptance criterion is not met, then fill of the associated cylinder shall be terminated.

IROFS38 Basis for Enhanced FPIN

The enhanced (i.e., Index of "-3") administrative control to limit the cylinder fill mass to ensure cylinder integrity is based on the following factors: Exceeding the cylinder fill mass limit will be precluded by independent verification (i.e., second verification) performed on the next shift following the completion of the IROFS38 periodic verification on the previous shift (i.e., first verification).

NRC Understanding of Operation of IROFS38

1. an operator observes the trending weight of a cylinder being filled, this action takes place in the control room by observing data in the PCS that is provided by the scale
2. if the weight of cylinder is getting close to a maximum limit, the operator will take action, through the PCS, to stop the flow of UF6 into the cylinder
3. it is our understanding that the PCS will automatically take action based on a lower weight limit (operational control)
4. it is our understanding that local displays in the UF6 handling area use data provided from the PCS

Proposed IROFSC7

Sampling and monitoring of enrichment to ensure that enrichment is correct and to identify if there are any unexpected changes in the enrichment output. The periodicity of the sampling or monitoring will be based on analysis to ensure that an unexpected change will be identified and actions are taken to prevent the potential of a critical condition occurring. The expected periodicity for sampling based on analysis from the ETC document, ETC4097220, "Risk of Criticality due to Over-Enrichment," is once or twice per week. A sample would also be taken following a change to the enrichment settings due to a new campaign and to the 1st cascade after any software changes to PCS. In addition to IROFS C6 which ensures that the correct settings are input to the cascade system for a new cascade, IROFS C7 would provide additional verification that the output enrichment for the cascade and assay are with in expected operating bands

and with in our operating license limits. This will provide an independent and diverse verification that enrichments are correct. This will also provide a means to ensure that we identify any enrichment issues independent of the PCS or the cascade PLC.

NRC Understanding of Operation of IROFSC7

1. a sample will be pulled from the product header at a specified frequency
2. the sample will be analyzed using mass spec equipment to determine the enrichment
3. if the enrichment is greater than a specified limit, the operator will be informed (automatic?) to take action to either reduce the enrichment level or stop enrichment, this action would be taken through the PCS

NRC Staff Conclusions

- IROFSC6 and IROFS38 require the use of instrumentation/controls/devices to accomplish the safety function, along with operator action
- Use of LES IROFS Boundary Definitions procedure is required by License Condition 19
- IROFSC6 and IROFS38 meet the criteria in LES IROFS Boundary Definitions procedure for categorization in Bin 3, Administrative IROFS (with the use of instrumentation/controls/devices)
- IROFSC6 and IROFS38 are not accurately characterized in the ISA Summary (i.e., purely administrative vs administrative with use of instrumentation/controls/devices)
- IROFSC6 and IROFS38 are both currently sole IROFS and an amendment would be required to make changes to the safety aspects of the IROFS
- If digital instrumentation and controls are utilized as part of IROFSC6 and IROFS38, then License Condition 20 would require a license amendment seeking approval of their use
- Proposed IROFSC7 requires the use of instrumentation/controls/devices to accomplish the safety function, along with operator action
- Proposed IROFSC7 meets the criteria in LES IROFS Boundary Definition procedure for categorization in Bin 3, Administrative IROFS (with the use of instrumentation/controls/devices)
- In the analyses provided by LES to justify a "non-credible" finding for certain accident sequences for enrichment control, LES staff did not perform an unmitigated or uncontrolled consequence analysis, but instead assumed that the plant control system, alarms, and operator actions would identify the faulted enrichment control condition and take the appropriated actions to mitigate the accident. This is contrary to LES' commitments in SAR Sections 3.2.3.2 and 3.2.3.3. As a result, appropriate IROFS controls were not identified to mitigate the accident sequence to make the consequences "highly unlikely." If an unmitigated and uncontrolled consequence analysis had been performed, the product enrichment would be limited only by the mechanical stops (another control?) in the control devices and could be up to 6.35 percent. This enrichment exceeds the criticality analysis limit of 6 percent and would exceed the license limit of 5 percent.
-

LES IROFS Boundary Definition, DP-ISA-1.1, Rev. 0 [original version at licensing]

Step 5.5.1 Using the following guidance for establishing IROFS boundaries, the NEF IROFS shall be placed into separate bins based on type. The bins are as follows:

- Bin 1, Hardware Only IROFS (No operator actions are needed to satisfy the intended safety function of the IROFS)
- Bin 2, Administrative IROFS Requiring Use of Components (The intended IROFS function is fulfilled through operator intervention combined with a Component)
- Bin 3, Administrative IROFS for Parameter Monitoring (The intended IROFS function is fulfilled through operator monitoring of a specific parameter to ensure the parameter is within specified limit(s))
- Bin 4, Administrative Only IROFS (The intended IROFS function is fulfilled through implementation of procedural requirements not involving the use of components)

Enclosure 2, BIN 2 – Administrative IROFS Requiring Use of Components

2. IROFS (Hardware Portion) Attributes
Using the IROFS safety function description in item 1 as the starting point, consider and address each of the following attributes.

5. Documentation of IROFS Boundary

b. Using the information developed in item 2 above, for each IROFS (hardware portion), a list shall be developed and maintained of all components (e.g., detectors, sensors, electronics, wiring, cabling, piping, valves, tanks, etc.) required to satisfy the IROFS safety function, including the required IROFS support functions. The components sahl be identified by tag number, unique ID number, etc.

Enclosure 3, BIN 3 – Administrative IROFS for Parameter Monitoring

2. IROFS Attributes
Using the IROFS safety function description in item 1 as the starting point, consider and address each of the following attributes.

a. Parameter Monitoring Instrumentation/Devices

The instrumentation or device(s) used to measure specific parameters identified in the Administrative IROFS for Parameter Monitoring shall meet the QA Level 1 M&TE requirements. As such, these instrument(s) or device(s) shall meet the requirements specified in the LES QAPD for M&TE. .....

4. Documentation of IROFS Boundary

b. Using the response from item 2 above, a list shall be developed and maintained for all instrument(s) or device(s) that satisfy LES QAPD requirements for M&TE for each Administrative IROFS for Parameter Monitoring. The instrumentation or device(s) shall be identified by the tag number, unique ID number, etc.

ENCLOSURE (4)

NEI Letter to the NRC re: Industry Consensus Paper and Second Public Meeting on Design Features, with Attachment, "Integrated Safety Analysis Bounding Assumptions and Design Features"

NUCLEAR ENERGY INSTITUTE

Janet R. Schlueter
DIRECTOR
FUEL & MATERIALS SAFETY
NUCLEAR GENERATION DIVISION

January 22, 2010

Mr. Daniel H. Dorman
Director, Division of Fuel Cycle Safety
and Safeguards
U.S. Nuclear Regulatory Commission
Washington, DC 20555

Mr. Joseph W. Shea
Director, Division of Fuel Facility Inspection
U.S. Nuclear Regulatory Commission
Sam Nun Atlanta Federal Center, 23 T85
61 Forsyth Street, S.W.
Atlanta, GA 30303-8931

Subject: Industry Consensus Paper and Second Public Meeting on Design Features.

Project Number: 689

Dear Mr. Dorman and Mr. Shea:

On behalf of the fuel cycle facilities, the Nuclear Energy Institute (NEI)[1] offers the following information and attached industry consensus position paper for your consideration as we plan for a second public meeting on design features associated with the Integrated Safety Analysis (ISA) required by 10 CFR 70, Subpart H.

We appreciated the opportunity in a public meeting on October 8, 2009, to discuss our mutual regulatory issues and concerns involving the designation and management of design features as a part of the ISA process and their relationship to Items Relied on for Safety (IROFS). During that meeting, it became clear that industry and NRC were not in alignment in regard to the basis for designating an item as a design feature. This lack of alignment is of concern to us not only due to the active licensing and enforcement actions underway, but also because of the expressed NRC approvals of both the methodologies and ISA Summaries from all affected licensees that included these basic principles and treatment.

Since last year, industry representatives have further deliberated on this important issue while witnessing NRC taking enforcement action and making licensing decisions that have questioned, and in some cases disapproved, a licensee's basis for designating and managing certain items considered

[1] NEI is the organization responsible for establishing unified nuclear industry policy on matters affecting the nuclear energy industry. NEI's members include all utilities licensed to operate commercial nuclear power plants in the United States, nuclear plant designers, major architect/engineering firms, fuel fabrication facilities, nuclear material licensees, and other organizations and individuals involved in the nuclear energy industry.

1776 I Street, NW | Suite 400 | Washington, DC | 20006-3708 | P: 202.739.8098 | F: 202.533.0132 | jrs@nei.org | www.nei.org

by the licensee to be design features and not an IROFS. The basis for NRC's current position on these matters is unclear, especially since NRC has long since accepted each site's ISA and safety program, and no subsequent rule or guidance on this matter has been issued or discussed with industry. As such, industry requests the NRC's use of enforcement discretion with regard to ongoing notices of violations related to this issue and that NRC reconsider its current approach with regard to active license actions.

In the interim, we support additional dialogue and the issuance of additional NRC guidance to clarify its expectations. In part to support the upcoming public meeting, industry representatives drafted the attached consensus position paper to better articulate its understanding of Part 70 and its experience with the rule, document current industry practices and position, and better inform NRC's consideration of this important matter. In addition, we trust that this paper will serve as a foundation for discussion during a second public meeting which we understand might be held in February 2010. Finally, this issue is also of concern to Part 40 licensees and applicants since it is our understanding that NRC is currently considering whether and how to include requirements similar to Subpart H of Part 70 in a modified Part 40.

We request that cognizant NRC management and staff consider the attached consensus paper and we strongly support a February public meeting since, as stated earlier, NRC continues to take regulatory action at specific fuel cycle facilities in the absence of a new rule or guidance on this matter, and in a manner that is confusing since licensees believe they are performing the required ISA work in accordance with NRC approved plans. It is difficult to comprehend how both the industry and NRC have arrived at this divergence on an understanding with regard to this basic concept. In that regard, industry is willing and prepared to work with NRC to identify a mutually acceptable path forward regarding the way safety programs are defined and documented.

Thank you for your prompt consideration of this matter. Please feel free to contact me at 202-739-8098; jrs@nei.org to coordinate the next public meeting on design features.

Sincerely,

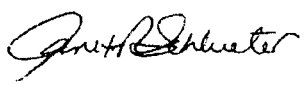

Janet R. Schlueter

Attachment

c: Mr. Michael F. Weber, NMSS, NRC
Mr. Victor M. McCree, Region II, NRC

ATTACHMENT

Integrated Safety Analysis
Bounding Assumptions and Design Features

Following several events at fuel facilities in the early 1990's and an evaluation of the root causes for these events, the NRC identified the need to look at the regulatory requirements placed on the 10 CFR 70 licensees and determine ways to improve the safety requirements in place at the facilities. The facilities were determined to be safe; however, it was felt that safety programs could be improved in a way to reduce the number of surprise occurrences. In addition to the NRC, industry representatives working with NEI had also been looking at ways to improve the regulatory-driven safety programs at the facilities and had identified a number of needed improvements.

As a result, NEI, on behalf of the fuel cycle facilities, petitioned the NRC for rulemaking relative to changes in the 10 CFR 70 regulations on September 30, 1996 (PRM-70-7). In essence, the petition pointed out that the fuel cycle plants were typically chemical plants and that the approach to safety at these plants should be dealt with in a manner similar to the way safety had been approached at chemical plants for many years. In addition, the approach should look at all elements of safety (criticality, radiological, chemical, fire, explosion, environment, etc.) in an integrated manner and that the resulting regulations should be risk informed and performance based so that resources could be allocated based on risk as opposed to an arbitrary prescriptive approach based on the then current regulations.

The NEI petition was denied; however the concept was generally accepted by the NRC and Subpart H was added to 10 CFR 70 becoming effective September 18, 2000. Subpart H identified clear performance requirements, specified an Integrated Safety Analysis (ISA) to determine the basis of safety including a consideration of risk for accident consequences, determination of an acceptable level of risk reduction through the identification of Items Relied On for Safety (IROFS) and the requirement to meet double contingency for criticality safety. Operating plants were to develop and submit for NRC approval their plans for performing their ISA by April 18, 2001, and complete the ISA, correcting any deficiencies and submit the ISA Summaries to the NRC by October 18, 2004. New plants and major modifications to existing plants were required to include baseline design requirements as stipulated in 10 CFR 70.64. ISA summaries were to be updated each year no later than 30 days after the end of the calendar year for changes made in the prior year.

Since September 2000, licensees have been operating to the new regulations, developing NRC-approved ISA plans, performing the ISA work and submitting ISA summaries to the NRC for their review and maintaining the IROFS identified by the ISA. In general, during this 10-year period there have been no major problems identified during the licensing phase and the NRC has approved all ISA plans and accepted the ISA summaries for the operating facilities. Beginning in late 2008, the NRC Inspection, Enforcement, and Licensing teams began questioning ISA records at fuel facilities, and problems began to be identified as violations/potential violations at most of the operating fuel facilities. The violations center around the definition for certain concepts that are implicit in Part 70 and necessary for the practical and effective functioning of Part 70, but which are not explicit in the

regulations or clearly defined in applicable guidance, i.e., the concepts of "Bounding Assumptions" and "Design Features" relative to their relation to "structures, systems, components and administrative actions" which in some cases constitute IROFS as is currently defined in the regulation. Also within licensing space, the NRC staff has rejected ISA determinations made consistent with the approved methodologies and approved ISAs for new licensing actions that are incongruent, that is disallowing ISA results with recognition of Design features/Bounding assumptions vs. declared IROFS. Nothing has changed at the facilities in terms of the manner in which the work was performed, the manner in which the IROFS have been implemented, the documented basis of safety (ISA/ISA Summary) or the manner in which the safety programs are managed at the facilities. The only change has been in the NRC function and personnel evaluating the implementation of the regulations.

The major benefits of the revision to Part 70 are (1) a clear definition of the performance requirements for facilities licensed under Part 70, (2) a more transparent documentation for the basis of safety (i.e., ISA/ISA Summary) and (3) a grading of those controls that are necessary for a facility to meet the performance requirements (i.e., IROFS). This third point is the key to improved predictability and consistent safety performance because, through the identification of IROFS using the ISA process, the licensee's major attention is focused on those controls most important to safety; and likewise, the NRC oversight can be similarly focused.

Under the prior subjective prescriptive safety program, each safety control received equal allocation by the finite applied resources of both the licensee and the NRC. In this environment, the average safety performance was acceptable; however, there were periodic surprises that were not acceptable. With a correct application of the ISA-driven process and the correct identification and application of IROFS, the risk of periodic surprises is significantly reduced and the application of resources is much better managed. Unnecessarily expanding IROFS over and above those necessary to meet the original intent of the regulations simply drives the safety program implementation back in the direction of an average program. Therefore, it is important to not over or under identify IROFS. The licensees struck this balance with the ISA Plans submitted to and approved by NRC licensing. Current NRC inspection and enforcement treatment is moving in a direction counter to overall risk reduction of high and intermediate consequence events.

10 CFR 70, Subpart H established additional requirements for certain NRC licensees and, in particular, specified performance requirements for those facilities and the requirements for a safety program to ensure that those performance requirements were met. 10 CFR 70.62 outlines those safety program requirements and the requirement to perform, document and maintain an integrated safety analysis for the licensed operations.

10 CFR 70.62 (b) requires specifically that the licensees must maintain process information sufficient to allow them to perform and maintain an integrated safety analysis. The process safety information enumerated is to include information pertaining to the hazards of the materials used or produced in the process, information pertaining to the technology of the process, and information pertaining to the equipment in the process.

10 CFR 70.62 (c) specifies the content and appropriate level of detail that is required for the Integrated Safety Analysis (ISA).

10 CFR 70.62 (d) describes the requirement for management measures that are necessary to ensure that the safety system required by regulation is effective performance, and it further indicates that these measures may be applied in a graded approach commensurate with the reduction of the risk attributable to that control or control system. The management measures also ensure that engineered and administrative controls and control systems that are identified as IROFS, pursuant to § 70.61(e) of this subpart, are designed, implemented, and maintained, as necessary, to assure they are available and reliable to perform their function when needed, to comply with the performance requirements of § 70.61.

10 CFR 70.64 imposes specific design requirements of new facilities or new processes that require a license amendment at existing facilities. Existing facilities and processes are only required to meet the performance requirements of 10 CFR 70.61.

Before conducting the ISA, it is important to define the scope of the analysis including the consequences of concern. In general, the NRC is interested in radiological, nuclear criticality, and certain chemical consequences that can affect worker or public safety. The ISA should take into account the following factors in conducting the analysis: site characteristics, the structures on the site, the equipment and materials in use, the processes in operation, and the personnel operating the facility. Credible external events resulting from meteorological and seismological phenomena and their potential for causing accidents at the facility also need to be addressed. Meteorological phenomena would include tornados, hurricanes, precipitation, and flooding. Any assumptions made in performing the ISA should be explicitly documented and examined for reasonableness. For example, any initiating events deemed to be "incredible," such as airplane crashes, meteorite impact, etc., should be justified and documented. By documenting the assumptions, the licensee will be better able to recognize any future changes that invalidate the assumptions and thus require modification to the ISA.[1]

The information available to support the ISA depends to a certain extent on the point in the life cycle of the facility or process at which the analysis is being performed. NUREG-1513 further points out that AIChE (1992) in Tables 2.1 and 2.2 and OSHA (1996) specify minimum typical sets of process safety information necessary to perform and maintain adequate hazards analysis supporting the ISA and to maintain the configuration so that changes can be properly evaluated.

Similarly, 10 CFR 70.61 provides the following two clarifying statements with regard to the performance requirements:

[1] NUREG-1513, Page 10

10 CFR 70.61(d) In addition to complying with paragraphs (b) and (c) of this section, the risk of nuclear criticality accidents must be limited by assuring that under normal and credible abnormal conditions, all nuclear processes are subcritical, including use of an approved margin of subcriticality for safety. Preventive controls and measures must be the primary means of protection against nuclear criticality accidents.

And

10 CFR 70.61(e) each engineered or administrative control or control system necessary to comply with paragraphs (b), (c), or (d) of this section shall be designated as an item relied on for safety. The safety program, established and maintained pursuant to § 70.62 of this subpart, shall ensure that each item relied on for safety will be available and reliable to perform its intended function when needed and in the context of the performance requirements of this section.

10 CFR 70.4 includes the following definitions of terms related to the ISA and the management measures that are required to keep them reliable and available to perform their intended purpose when called upon to do so.

Configuration management *(CM)* *means a management measure that provides oversight and control of design information, safety information, and records of modifications (both temporary and permanent) that might impact the ability of items relied on for safety to perform their functions when needed.*

Items relied on for safety *(IROFS)* *mean structures, systems, equipment, components, and activities of personnel that are relied on to prevent potential accidents at a facility that could exceed the performance requirements in § 70.61 or to mitigate their potential consequences. This does not limit the licensee from identifying additional structures, systems, equipment, components, or activities of personnel (i.e., beyond those in the minimum set necessary for compliance with the performance requirements) as items relied on for safety.*

Integrated Safety Analysis *(ISA)* *means a systematic analysis to identify facility and external hazards and their potential for initiating accident sequences, the potential accident sequences, their likelihood and consequences, and the items relied on for safety. As used here, integrated means joint consideration of, and protection from, all relevant hazards, including radiological, nuclear criticality, fire, and chemical. However, with respect to compliance with the regulations of this part, the NRC requirement is limited to consideration of the effects of all relevant hazards on radiological safety, prevention of nuclear criticality accidents, or chemical hazards directly associated with NRC licensed radioactive material. An ISA can be performed process by process, but all processes must be integrated, and process interactions considered.*

Management measures[2] *mean the functions performed by the licensee, generally on a continuing basis, that are applied to items relied on for safety, to ensure the items are available and reliable to perform their functions when needed. Management measures include configuration management, maintenance, training and qualifications, procedures, audits and assessments, incident investigations, records management, and other quality assurance elements.*

The regulations clearly require that a systematic evaluation (process hazards analysis) defined as an ISA is to be performed and that its purpose is to identify the IROFS necessary to ensure that the performance requirements are met. Given this requirement, it is inherent in the approach that there is a certain amount of definitive information that must be documented with regard to the facilities and processes that relate to the structures, systems and components in advance of performing the hazards analysis, and that such information necessary to support the required systematic analysis does not necessarily have a one-to-one correspondence with the structures, systems and components that constitute the controls and administrative routines applied as IROFS. This is inferred from a careful reading of the AIChE text as well as NUREG-1513 which draws heavily on both the AIChE and OSHA approaches.

While the amount of available preliminary information may vary depending on the point in the life cycle of the facility or process at which the evaluation takes place, there is a certain minimum amount of information that must be specified; otherwise it makes no sense. The analysis cannot be done in a vacuum and, in fact, the professional references all specify some minimum amount of information necessary to support the analysis. The initial application of these relatively new regulatory requirements to existing facilities and processes as well as a number of new facilities and processes have led licensees to generally apply two terms to this type of information – **Bounding Assumptions** and **Design Features** – neither of which has been adequately defined, in regulations, guidance, license applications or technical literature.

The closest such reference to a definition applicable to bounding assumptions/design features is in NRC Interim Staff Guidance (ISG)-01 "Qualitative Criteria for Evaluation of Likelihood" where the guidance states: "For both types of internal initiating events, facility or process features (or physical and chemical phenomena) that can affect the initiating event likelihood or consequence may be identified as **initial conditions or bounding assumptions**."[3] At DOE nuclear facilities, where 10 CFR 830 applies, DOE guidance covers ***design features*** in the development of technical specifications where design features are described as passive safety SSCs such as piping, vessels, supports, structures and containers, and the configuration or physical arrangement including

[2] This definition was added when Subpart H was added to 10 CFR 70 and is somewhat misleading as it indicates that *management measures* are only applied to IROFS, when in fact management measures have always been used in the implementation of licensee's safety programs for the purpose of assuring that the program is effective. In previous licenses these measures were distributed throughout the license chapters and in the new format they have been integrated into a single chapter and are applied to all aspects of the licensee's safety program as described in the facility license commitments.

[3] ISG-01, "Qualitative Criteria for Evaluating Likelihood", Page 4, 3rd paragraph from the top.

dimensions, parameters being controlled and the reasoning behind the design.[4] In essence then, bounding assumptions/design features are those fundamental or environmental features of the facility and process that directly or indirectly influence safety. Classic examples would include limiting container sizes for chemicals that could allow a hazard to propagate into an accident or the routing of service piping/wiring in such a way that it cannot contribute to an accident. These assumptions must be explicitly described in the hazards analysis and, as such, become part of the controlled configuration. The important factor is that these initial conditions and bounding assumptions must be identified, and, if susceptible to change over the lifetime of the facility (such as through process deviations or facility changes), must be appropriately maintained. This clearly acknowledges a set of initiating conditions, assumptions or boundaries for the analysis is required. These attributes or conditions, if relied upon for the outcome of the analysis especially to document the credibility, frequency or consequence, must be assured to remain valid. This is primarily accomplished by maintaining them via configuration control measures.

IROFS on the other hand are those active engineered and required controls applied to the facility and process to ensure that the regulatory-driven performance requirements are met. Typically these are valves, instruments, sensors, control systems, alarms and other devices including explicit administrative controls such as procedures which are expected to operate when called on to prevent or mitigate an accident. Because these types of controls demonstrate complex failure modes, they are required to have a different level of management oversight to assure they are available when needed.

It is proposed that the following definition be adopted: **Bounding Assumptions/Design Features** – Passive engineered features of the facility/process configuration that have insignificant possibility of failure, the safety aspect is not easily altered or degraded and do not require periodic testing or verification to ensure they remain available and reliable to perform their intended function. The only credible mechanism by which these features could be altered is through a formal design change performed under the configuration control program. In this context, bounding assumptions/design features are maintained by the application of management measures including configuration management, routine audits and other surveillance activities. Bounding assumptions/design features depend solely or to a high degree upon physical laws, characteristics and/or role of the features in performing their safety functions. Typical examples include:

- Most installation dimensions, e.g., spacing between favorable-geometry tanks that prevents significant neutron interaction
- Open-top cylindrical vessels whose outside diameter falls within the favorable-geometry requirement
- A funnel break or break-tank between process vessels that protects against backflow, when it is designed so there exists no credible physical mechanism to force fluid in reverse through it, or to plug the atmospheric discontinuity in such a way as to allow backflow

[4] DOE G 423.1-1, *Implementation Guide for the use in Developing Technical Safety Requirements*, Section 5.2.5, 10/21/2001.

- Building structures that meet local building codes in effect at the time of construction
- Any of the items in Tables 2.1 and 2.2 of NUREG-1513
- Flat, impermeable floors without deep collection points (e.g., sumps), such that credible liquid spills cannot reach the minimum depth or areal density required for nuclear criticality
- Routing of liquid-containing pipes far enough away from moderation-controlled areas that no credible leak or spray can adversely impact such areas
- Sealed buildings designed to prevent the dispersion of a source term beyond the containment area
- Roofs, walls, floors and other physical barriers constructed to prevent water intrusion into moderation controlled areas
- Structural components such as concrete equipment bases, fixed geometry conveyor systems, rod tray storage cabinets, and fuel assembly storage racks
- Spill control measures such as curbing, sumps, dikes and sloped floors designed to collect or control liquid releases
- Geometrically safe piping

The licensee's approved plan and internal procedures for conducting ISAs must include the facility-specific definition of Bounding Assumptions/Design Features including relevant examples that are facility specific to help ensure a clear understanding and application of the terms and their use. Bounding Assumptions/Design Features are in no manner to be used to avoid the identification of IROFS or in some way to substitute for them.

The Bounding Assumptions/Design Features must be clearly called out and documented in the ISA. The level of detail must be sufficient to ensure that when changes are evaluated as a part of the configuration management activity, the role of the feature is well understood relative to changes that are being made.

The Configuration Management element of the Management Measures at the facility provides the high level of assurance that Bounding Assumptions/Design Features remain in place and true to the original design intention.[5] In this regard, Configuration Management should be viewed as an integrated system of procedures, organizational structure, training, and supporting surveillance activities including routine audits, inspections and periodic maintenance. The adequacy of the Management Measures to meet their intended purpose is verified during license renewal and as a part of the routine NRC oversight process. The requirements of 10 CFR 70.62 (b) and (c) require such information to be maintained current and accurate for the facility.

Industry and the NRC must work together to develop a path forward that results in upgrading the definitions and understanding of terms used in the licensee plans for conducting and maintaining the ISA, that also results in timing that is consistent with the licensee's ability to update their work while

[5] Modifications of bounding assumptions, design features, and all facility changes are evaluated in accordance with 10 CFR 70.72(b) and (c) before implementation to ensure that any impact on the safety of the operations is identified, considered, and documented before the change is implemented.

continuing to meet the required regulatory reporting requirements. Such a path forward might generally follow the outline below:

- Develop the definition and guidance for ISG/NUREG-1520 for Bounding Assumptions/Design Features
- Develop an interim plan for dealing with inspection findings in this area until such time as a path forward is clear (Unresolved Items or Enforcement Discretion).
- Licensees modify their plans/licenses to incorporate the facility-specific definitions (Industry and NRC should work for timing to support January 2011 ISA Summary Updates)
- Licensees update their ISA/ISA Summary documentation to incorporate the information necessary to implement the definition at their facility (Licensees and the NRC should try and work to a schedule that will support incorporation in their January 2011 ISA Summary Updates)

ENCLOSURE (5)

QA Level 2 Examples, with Cover Email to the NRC

Docket 70-3103

From: <rod.krich@exeloncorp.com>
To: <tcj@nrc.gov>
Date: 3/9/04 12:16PM
Subject: FW: QA Level 2 Examples

Tim,

Attached are examples of Quality Level 2 Structures, Systems, or Components. Please pass these along to Will Smith and let me know if it meets his needs.

Rod Krich
LES
-----Original Message-----
From: KENNEDY Michael F [mailto:Michael.Kennedy2@framatome-anp.com]
Sent: Monday, March 08, 2004 6:34 PM
To: Rod Krich (rod.krich@exeloncorp.com)
Cc: PEPE David M; HARPER George A
Subject: QA Level 2 Examples

Rod:

As we discussed on the conference call, we worked up some examples of QA Level 2 components for your review.

Michael F. Kennedy, Ph. D., PE

Nuclear Analysis Group, Engineering Programs

Marlborough MA

(978) 568-2724 Voice

(978) 568-3704 Fax

****
This e-mail and any of its attachments may contain Exelon Corporation proprietary information, which is privileged, confidential, or subject to copyright belonging to the Exelon Corporation family of Companies. This e-mail is intended solely for the use of the individual or entity to which it is addressed. If you are not the intended recipient of this

e-mail, you are hereby notified that any dissemination, distribution, copying, or action taken in relation to the contents of and attachments to this e-mail is strictly prohibited and may be unlawful. If you have received this e-mail in error, please notify the sender immediately and permanently delete the original and any copy of this e-mail and any printout. Thank You.
****

QA Level 2 Examples

Criticality Alarms

Criticality alarms in areas where special nuclear material is handled, used, or stored in amounts less than the 10 CFR 70.24 mass limits are examples of components which could be designated as QA Level 2 (component not needed to meet regulatory requirements).

Uninterruptible Power Supplies (UPS)

UPS for a Tails Takeoff Station provides power for the air return temperature hardwired trip of the defrost heater (IROFS1). However, on loss of power, the hardwired trip of the defrost heater (IROFS1) fails safe and trips the defrost heater. Therefore, this UPS is designated as QA Level 2 (not needed to support IROFS and failure does not impact IROFS performance, but UPS is needed for reliable Tails Takeoff Station operation).

Compressed Air System

No IROFS require compressed air to perform their safety function nor does the failure of the compressed air system impact IROFS performance. Therefore, this system is designated as QA Level 2 (not needed to support IROFS and failure does not impact IROFS performance, but the system is needed for reliable facility operation). If during detailed design the ISA update process (which is part of configuration management), determines that compressed air is required to support IROFS operability, then it would be required to be designated as QA Level 1.

Load Cell (Takeoff Stations)

IROFS38, Cylinder Over fill Administrative Control, is the use of procedures and training, to administratively control cylinder over fill by verifying that cylinder weight is within specified limits once per shift. IROFS38 is not specific with regard to the device used to verify cylinder weight. The intent of IROFS38 is to provide preventive protection for ensuring that the overfilling of a cylinder does not go undetected. IROFS38 ensures that the operations staff observes the fill trend of the cylinder. The accurate weight of the cylinder is not particularly relevant. Operator training and experience and the procedural control to check once per shift are relied on to ensure that the cylinder is filling properly. If the associated load cell to be used to perform IROFS38 were to become inoperable, other means are available to determine the weight. As such, the load cell used to perform IROFS38 is not required to be designated an IROFS and therefore is not required to QA Level 1. However the load cell is necessary to support reliable facility operation and therefore would be designated as QA Level 2.

ENCLOSURE (6)

August 8, 2002 Meeting Summary: Louisiana Energy Services Pre-Application Meeting for Instrumentation and Controls and Integrated Safety Assessment, dated August 13, 2002

UNITED STATES
NUCLEAR REGULATORY COMMISSION
WASHINGTON, D.C. 20555-0001

August 13, 2002

MEMORANDUM TO: Melvyn N. Leach, Chief
Special Projects and Inspection Branch
Division of Fuel Cycle Safety
and Safeguards

THRU: Joseph G. Giitter, Chief
Special Projects Section
Special Projects and Inspection Branch, FCSS

FROM: Timothy C. Johnson
Senior Mechanical Systems Engineer
Special Projects Section
Special Projects and Inspection Branch, FCSS

SUBJECT: AUGUST 8, 2002, MEETING SUMMARY: LOUISIANA ENERGY SERVICES PRE-APPLICATION MEETING ON INSTRUMENTATION AND CONTROLS AND INTEGRATED SAFETY ASSESSMENT

On August 8, 2002, U.S. Nuclear Regulatory Commission (NRC) staff met with staff from Louisiana Energy Services (LES) to discuss the LES approach for gas centrifuge instrumentation and controls and for performing integrated safety assessments. These were pre-application discussions related to LES's planned submittal of an application for a gas centrifuge enrichment plant in December 2002. I am attaching the meeting summary for your use. This summary contains no proprietary or classified information.

Docket: 70-3103

Attachment: Louisiana Energy Services
Meeting Summary

cc: William Szymanski/DOE
Rod Krich/Exelon
James Curtiss/W&S
Mario Robles/USEC

Louisiana Energy Services Pre-Application Meeting Summary

Dates: August 6, 2002

Place: U.S. Nuclear Regulatory Commission (NRC) offices; Rockville, MD

Attendees: See Attachment 1

Purpose:

The purpose of this meeting was to discuss with Louisiana Energy Services (LES) staff gas centrifuge instrumentation and control and the LES approach for performing an integrated safety assessment applicable to LES' planned gas centrifuge license application. The meeting agenda is provided in Attachment 2. LES presentation handouts are provided in Attachment 3.

Discussion:

Following introductions, R. Krich provided a general update on the status of partnership negotiations and site selection. He also indicated that the site selection process is proceeding and LES expects to announce its short list of potential sites by August 16, 2002, and make a final decision by the end of August 2002. R. Krich also stated that a Memorandum of Agreement to consider Westinghouse and Cameco as new partners in the LES Partnership was announced in July. He said that a final partnership agreement is planned to be signed at the end of this year.

LES staff discussed their design philosophy for instrumentation and control (I&C) systems. I&C system design priorities are first, safety; second, asset protection; and third, production. For safety systems, the controls are all automatic and hardwired such that the operator has no role in system activation. If normal control systems, which use programmable logic controllers (PLCs), fail, safety systems are actuated independent of PLCs. While safety systems can be manually initiated, manual initiation of safety systems is not credited in the safety analyses.

For asset protection, that is protection of production equipment that has no safety significant function, LES will use process redundancy and protection system redundancy. Process redundancy will ensure that more than one method is available to conduct operations. For example, to remove uranium hexafluoride from the cascade, the normal withdrawal system can be used as well as the contingency dump system. Protection system redundancy involves use of dual control systems using PLCs. For these dual control systems, only one of the systems is needed to actuate to initiate a protective function.

For production protection, the objective is to minimize production downtime. LES staff indicated that the current design provides a 99.5 percent system availability. Instrument redundancy and process redundancy are used. Instrumentation intended to protect production functions are based on two out of three sensors tripping to actuate the protective function. Examples of process redundancy, include having multiple feed and withdrawal stations that can be used if a station fails or is taken out of service for maintenance.

The plant control system is designed to have central and local control systems. The central control system uses a central control room to control plant operations and a supervisory control and data acquisition system. Operators in the central control room use overview screens to monitor plant functions and control stations for changing plant operations. Operator stations are designed for simplicity to minimize the actions needed to initiate a control function and allows the use of a minimum of operators to control plant operations.

Local control systems are PLC-based and use redundant communication links to the central control system. This system provides operators with direct links to equipment and is designed so that communication failures will not affect the initiation of protective functions.

Operator training is performed using a stand-alone control system identical to that used in the plant. This system can also be used for new software development.

For integrated safety assessments (ISAs), LES prepared a plan that includes a preparation phase, an execution phase, and a documentation phase. The preparation phase includes development of a procedure for conducting the work, forming an analysis team, training the team, and compiling information for the analysis. At this point a draft procedure has been developed and a team has been formed to do the work. The procedure will be formal process for performing the analyses in accordance with an NQA-1 quality assurance program. Identification of hazards to be covered by the analyses will use a HAZOP approach based on previous Urenco safety analyses.

The analyses will be performed for non-classified and classified systems. The ISA team will perform the analyses for the non-classified systems and a Urenco team, having the proper clearances, will perform the classified system analyses. The analyses will be based on the risk index method suggested in NUREG-1520, "Standard Review Plan for the Review of a License Application for a Fuel Cycle Facility." Probabilistic risk assessments would be used only for high consequence events such as plane crashes into the tails storage pad.

Supporting documentation and an ISA summary document will be prepared. The ISA summary would be non-classified and non-proprietary, and would be suitable for demonstrating compliance with the requirements in 10 CFR 70.61.

Action Items:

None

Attachments:
1. Attendee List
2. Meeting Notice and Agenda
3. LES Presentation Handouts

MEMORANDUM TO: Melvyn N. Leach, Chief
Special Projects and Inspection Branch
Division of Fuel Cycle Safety
and Safeguards

THRU: Joseph G. Giitter, Chief
Special Projects Section
Special Projects and Inspection Branch, FCSS

FROM: Timothy C. Johnson
Senior Mechanical Systems Engineer
Special Projects Section
Special Projects and Inspection Branch, FCSS

SUBJECT: AUGUST 8, 2002, MEETING SUMMARY: LOUISIANA ENERGY SERVICES PRE-APPLICATION MEETING ON INSTRUMENTATION AND CONTROLS AND INTEGRATED SAFETY ASSESSMENT

On August 8, 2002, U.S. Nuclear Regulatory Commission (NRC) staff met with staff from Louisiana Energy Services (LES) to discuss the LES approach for gas centrifuge instrumentation and controls and for performing integrated safety assessments. These were pre-application discussions related to LES's planned submittal of an application for a gas centrifuge enrichment plant in December 2002. I am attaching the meeting summary for your use. This summary contains no proprietary or classified information.

Docket: 70-3103

Attachment: Louisiana Energy Services
Meeting Summary

cc: William Szymanski/DOE
Rod Krich/Exelon
James Curtiss/W&S
Mario Robles/USEC

DISTRIBUTION: Docket: 70-3103 ADAMS PUBLIC NMSS r/f

FCSS r/f	SPIB r/f	RPierson	ELeeds
JLieberman/OGC	DAyres/Reg II	PHiland/Reg III	FBurrows
BBartlett/Reg III	DHartland/Reg III	MChatterton	BSmith/EDO
TCombs/OCA	STreby/OGC	SFlanders/DWM	THarris/DWM
GLongo/OGC	KEverly/NSIR	DBrown	YFaraz
JCalvert/RES	JKramer/RES	APersinko	Hearing file

ADAMS Accession No.: ML022250407
G:\SPB\TCJ\LESGCMTGSUM8-6.WPD *SEE PREVIOUS CONCURRENCE

OFC	SPIB		SPIB	2E	FCFB		SPIB	
NAME	TCJohnson:dw		DHoadley		FBurrows		JGiitter	
DATE	08/09/02		08/10/02		08/13/02		08/09/02	

C = COVER E = COVER & ENCLOSURE N = NO COPY
OFFICIAL RECORD COPY

MEMORANDUM TO: Melvyn N. Leach, Chief
Special Projects and Inspection Branch
Division of Fuel Cycle Safety
and Safeguards

THRU: Joseph G. Giitter, Chief
Special Projects Section
Special Projects and Inspection Branch, FCSS

FROM: Timothy C. Johnson
Senior Mechanical Systems Engineer
Special Projects Section
Special Projects and Inspection Branch, FCSS

SUBJECT: AUGUST 8, 2002, MEETING SUMMARY: LOUISIANA ENERGY SERVICES PRE-APPLICATION MEETING ON INSTRUMENTATION AND CONTROLS AND INTEGRATED SAFETY ASSESSMENT

On August 8, 2002, U.S. Nuclear Regulatory Commission (NRC) staff met with staff from Louisiana Energy Services (LES) to discuss the LES approach for gas centrifuge instrumentation and controls and for performing integrated safety assessments. These were pre-application discussions related to LES's planned submittal of an application for a gas centrifuge enrichment plant in December 2002. I am attaching the meeting summary for your use. This summary contains no proprietary or classified information.

Docket: 70-3103

Attachment: Louisiana Energy Services
Meeting Summary

cc: William Szymanski/DOE
Rod Krich/Exelon
James Curtiss/W&S
Mario Robles/USEC

DISTRIBUTION: Docket: 70-3103

ADAMS	PUBLIC	NMSS r/f	
FCSS r/f	SPIB r/f	RPierson	ELeeds
JLieberman/OGC	DAyres/Reg II	PHiland/Reg III	FBurrows
BBartlett/Reg III	DHartland/Reg III	MChatterton	BSmith/EDO
TCombs/OCA	STreby/OGC	SFlanders/DWM	THarris/DWM
GLongo/OGC	KEverly/NSIR	DBrown	YFaraz
JCalvert/RES	JKramer/RES	APersinko	Hearing file

ADAMS Accession No.
G:\SPB\TCJ\LESGCMTGSUM8-6.WPD *SEE PREVIOUS CONCURRENCE

OFC	SPIB	SPIB 2E	FCFB	SPIB
NAME	TCJohnson:dw	DHoadley	FBurrows	JGiitter
DATE	8/9/02	8/10/02	8/13/02	8/9/02

C = COVER **E = COVER & ENCLOSURE** **N = NO COPY**
OFFICIAL RECORD COPY

Louisiana Energy Services Pre-Application Meeting on
Instrumentation and Controls and Integrated Safety Assessment
Date: August 6, 2002

NAME	AFFILIATION	PHONE	EMAIL ADDRESS
TIM JOHNSON	NRC	301-415-7299	TCJ@NRC.GOV
MICHAEL KNAPIK	McGRAW-HILL	202-383-2167	MIKE_KNAPIK@PLATTS.COM
Elizabeth McPherson	self	423-543-5422	emcpherson@rek-inc.com
Jim MARCHETTI	SELF	301 651 8416	JIMANDANGEL@MSN.COM
STEVEN ARNDT	NRC	301-415-6502	saa@nrc.gov
Erich Kraska	self	703-242-8067	JLKraska@AOL.com
Muffet Chatterton	NRC	301-415-7906	MSC1@NRC.GOV
Cheryl Moss	Wy Consultants	101-610-6635	mossherman@msn.com
Mario Robles	USEC	301-564-3408	roblesm@usec.com
TRENT WERTZ	USEC	301-564-3324	WERTZT@USEC.COM
JOSEPH GUITTER	NRC	301-415-7485	JGG@NRC.GOV
JOEL KRAMER	NRC	301-415-5891	JKI1@nrc.gov
JOHN A. CALVERT	NRC	301-415-6323	jac4@nrc.gov
FRED BURROWS	NRC	301-415-8110	FHB@NRC.GOV
Tim Harris	NRC	301 415 6613	TEH@NRC.GOV
Andrew Persinko	NRC	301-415-6522	AXP1@NRC.GOV
Mike Sexton	VEDP	804-371-3187	msexton@yesvirginia.com

Attachment 1

Louisiana Energy Services Pre-Application Meeting on
Instrumentation and Controls and Integrated Safety Assessment
Date: August 6, 2002

NAME	AFFILIATION	PHONE	EMAIL ADDRESS
Brian Jirel	LES	575-394-5171-0424	BJIRELL@[illegible]
Robert M. Taylor	NRC/NMSS/SFPB	301-415-6433	RETZ@NRC.GOV
Fiona Bell	Winston & Strawn	202 371 6815	fbell@winston-strawn.com
Jim Hammelman	SAIC	540 341-8002	james.e.hammelman@saic.com
John Eichner	SAIC	202-488-6651	eichinerj@saic.com
Joseph Barden	self	202-237-2423	JFB3603@aol.com
RM Krich	Exelon Nuclear	630-657-2813	rod.krich@exeloncorp.com
Jim Andrews	URENCO	+44-7880-781933	jim.andrews@cap.urenco.co.uk
Andy Whittaker	URENCO	+44-7880-781951	ANDY.WHITTAKER@CAP.URENCO.CO.UK
Michael F. Kennedy	FRAMATOME ANP DE+S	478-568-2724	Michael.Kennedy@FRAMATOME-ANP.CV
Mary Gavlik	self	423 434.9535	mjgav@yahoo.com

UNITED STATES
NUCLEAR REGULATORY COMMISSION
WASHINGTON, D.C. 20555-0001

July 17, 2002

MEETING NOTICE

Applicant:	Louisiana Energy Services Suite 610 2600 Virginia Avenue, NW Washington, DC 20037
Docket:	70-3103
Date and Time:	August 6, 2002; 1:00 P.M.
Location:	U.S. Nuclear Regulatory Commission One White Flint North Building, Room O-4B6 11555 Rockville Pike Rockville, Maryland
Purpose:	To discuss instrumentation and controls and integrated safety analysis applicable to a gas centrifuge license application.
NRC Attendees:	M. Leach, J. Giitter, T. Johnson, J. Lieberman, J. Calvert, F. Burrows, J. Kramer; technical staff
Other Attendees:	R. Krich/Exelon; C. Andrews/LES; D. Marcelli/Framatome DES; technical staff
Contact:	T. Johnson; 301-415-7299; tcj@nrc.gov Attendance at this meeting by other than those listed above should be made known via phone to above contact.
Category:	*Category 1 Meeting: The public is invited to observe this meeting and will* have one or more opportunities to communicate with the NRC after the business portion, but before the meeting is adjourned.

NOTE: NRC Meetings are open for interested members of the public to attend pursuant to the "Enhanced Public Participation in NRC Meetings; Policy Statement," 67 *Federal Register* 36920, May 28, 2002.

Attachment: Meeting agenda

Attachment 2

Louisiana Energy Services Pre-Application Meeting Agenda
August 6, 2002

___ Purpose/Introductions (TJohnson)

___ Plant Instrumentation and Controls Approach

___ Integrated Safety Analysis Plan

___ Summary and Conclusions

Attachment

Louisiana Energy Services - NRC Meeting

Pre-Application Review

Separation Plant
Plant Control System

LES

Attachment 3

Design Priorities

- **Public, Environment and Personnel**
- **Asset Protection**
- **Production (maximize availability)**

Public, Environment and Personnel

- **First Principle**
  - **Process is intrinsically safe**

    - **Sub-atmospheric pressure operation (except liquid sampling)**
    - **Safe by design**

  - **Protection is automatic. The operator has no role to play in protection.**

- **Second Principle**
  - **Protection is Local, Simple and Direct**

    - **Adequate protection for hazard**
      Consequence based.
      This is outer envelope, Programmable Logic Controller will act first.
    - **Independent of plant control system**

LES

Asset Protection

- **Process Redundancy**
  - **Alternative process routes**
    - Dual UF_6 take-off routes
    - Primary and secondary systems
- **Protection Redundancy**
  - **Dual control systems 'protection'**
  - **1 out of 2 logic**
    - Taken once.

Production

- **Design provides adequate (99.5%) availability**
  - **Minimizes production downtime**
- **Instrument redundancy**
  - **2 out of 3 logic**
- **Process redundancy**
  - **Multiple UF_6 take-off routes**
  - **Multiple feed sources**

Plant Control System - Architecture

- **Central Control System**
- **Local Control System**
- **Plant Equipment Interface**

System Architecture

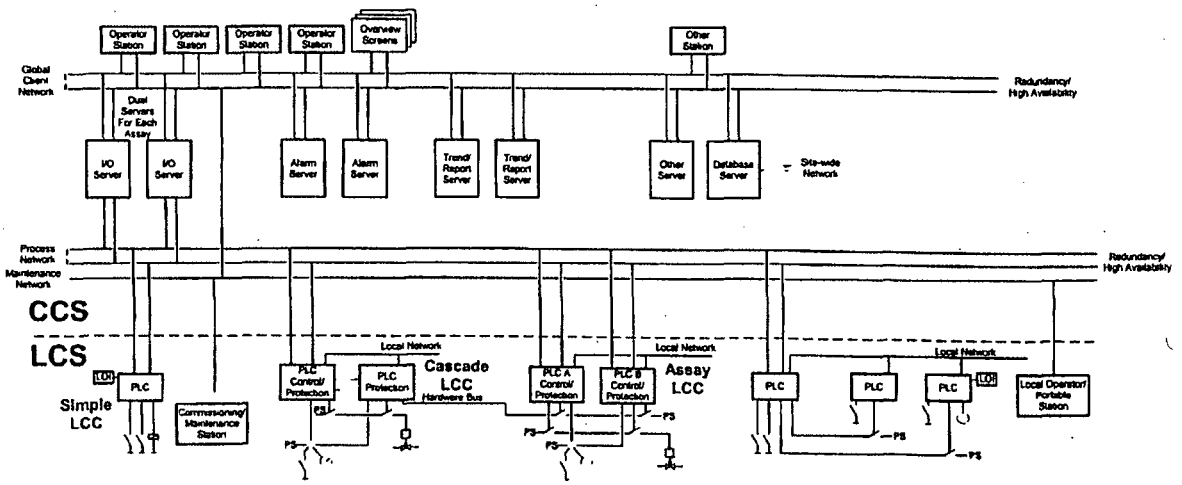

LES

Central Control System (CCS)

- **Provides:**
  - **Supervision and control of plant operations**
  - **Supervisory interface for auxiliary systems**

- **Consists of:**
  - **Control room**
    - Supervisory Control And Data Acquisition (SCADA) system
    - Overview screens
    - Operator stations
    - Control desk
  - **Redundant client networks (High level plant wide)**
  - **Redundant process networks (Assay based)**
  - **Client / Server architecture**
  - **System / database servers**

Control Room

- Overview screen
  - Alarm based
  - Assay / Plant based
  - One glance visualization of plant state

- Operator stations
  - Allows minimum number of operators to supervise plant
  - Minimum number of keystrokes from system to object

- SCADA
  - CiTechnologies Pty - CITECT

- Environment
  - Quiet (No through route)
  - Ergonomically designed layout of SCADA screens and room.

Typical Control Room (UK E23 Facility)

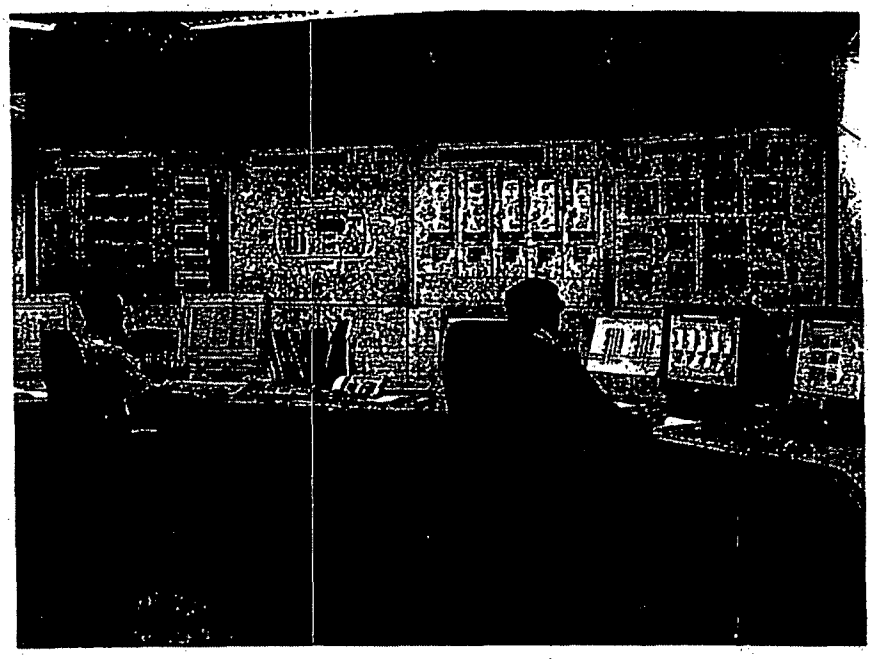

LES

Training System

- Stand-alone system
- Clone of Plant Control System
  - Software and hardware functionality
- Used to develop and test software
- Support operator training
- Sited adjacent to control room
  - Operators can use system to check procedures

Training System

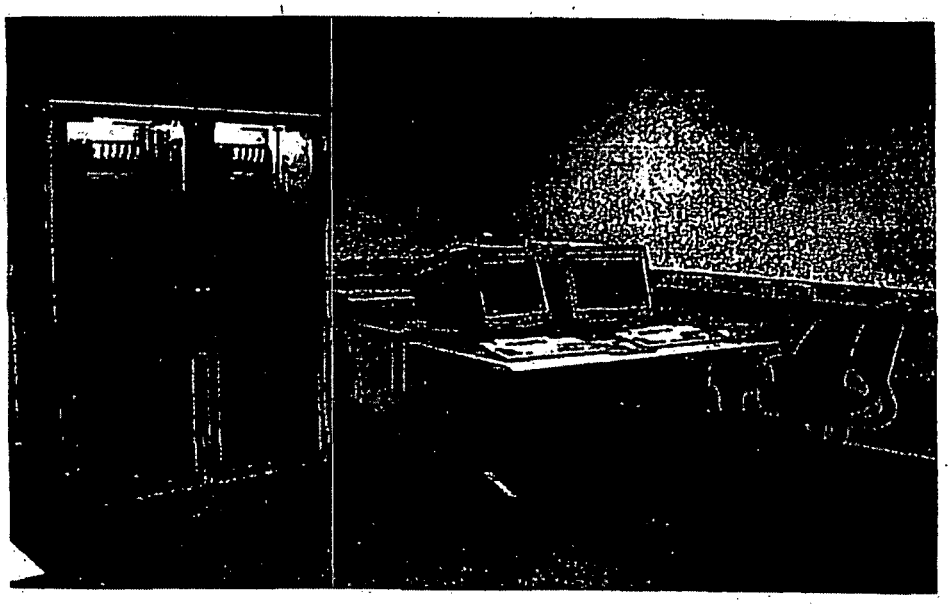

LES

Local Control System

- Local Control Centres (LCC)
- PLC based
- Communicates to CCS via redundant communications
- Provides operator with local operator interface (LOI)
- Provides interface to plant equipment
- Failure of communications has no effect on protection actions
- Any local failure cannot propagate to produce a system-wide failure.

Local Control System - LCC

LES

Plant Equipment Interface

- **Direct from Local Control Cabinet (LCC)**
- **Simple and hardwired**
- **Failsafe**
- **No effect on independent equipment protection**
- **LCC with local operator interface mounted close to equipment**
  - **Ergonomic local preparation of plant**

Example
Control and Protection – Feed Station

- **Self-contained control system**
- **Independent of plant control system**
- **Temperature control separate from protection systems**
- **No alarms during normal operation**
- **Protection systems are diverse, and failsafe**
  - **capillary device**
  - **hardwired temperature sensor**

Control and Protection – Feed Station

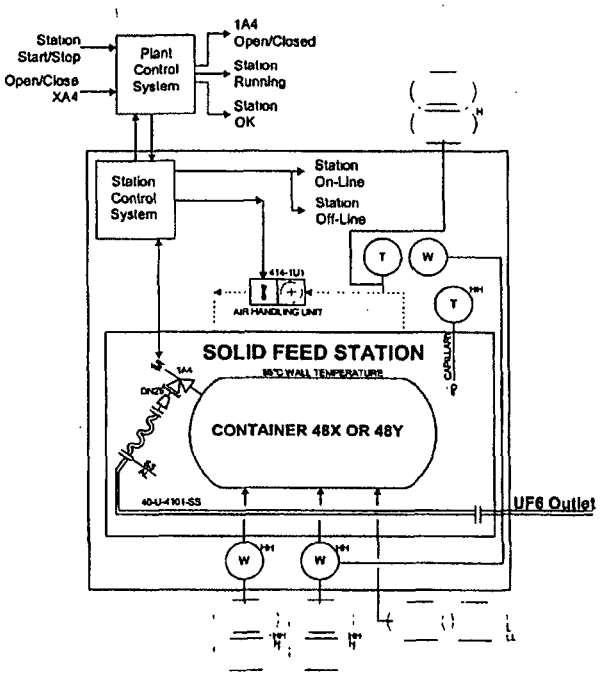

LES

Example
Asset Protection

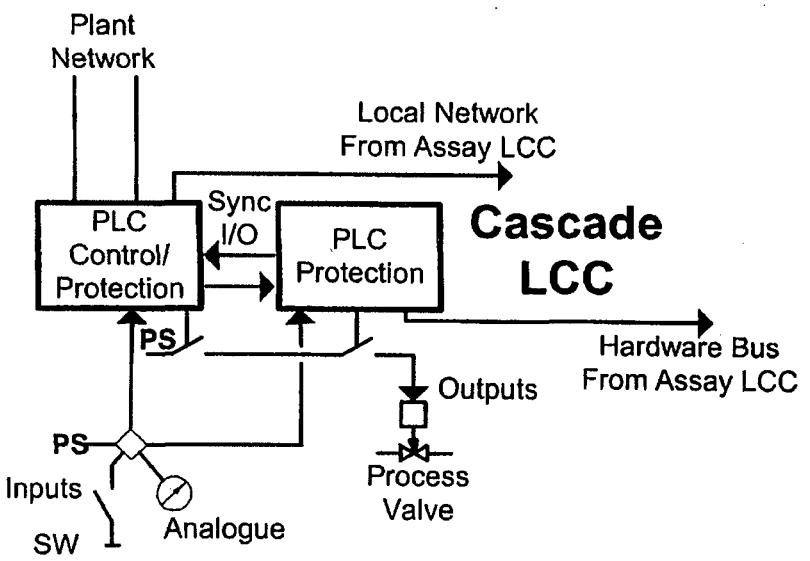

LES

Summary

- ❑ Chemical Plant with Nuclear Material
- ❑ Intrinsically Safe
- ❑ Local, Simple and Diverse Protection System
- ❑ Modular In Design
- ❑ Control System Keeps Plant Within Operating Envelope
- ❑ Protection Systems Utilize 1 out of 2 Logic

Louisiana Energy Services – NRC Meeting
Pre-Application Review

Integrated Safety Analysis Plan

August 6, 2002
Rockville, MD

LES

Integrated Safety Analysis (ISA) Plan

- **Purpose of this presentation is to communicate the elements of the ISA Plan to be utilized in support of the LES-2 License Application**

Elements of ISA Plan

- ❑ **ISA Preparation**
- ❑ **ISA Execution**
  - ■ **Non-Classified Systems**
  - ■ **Classified Systems**
- ❑ **ISA Documentation**
  - ■ **ISA Supporting Material**
  - ■ **ISA Summary Report**

ISA Preparation

- ❑ **Develop ISA Procedure**
  - **Formalize process for conducting ISA**
- ❑ **Form ISA Team**
  - **Safety specialists, design and operational experts, specialists in ISA methodology**
- ❑ **Train ISA Team**
  - **Combined ISA Leader and Validation Training Courses conducted by Process Safety Institute**
- ❑ **Compile Process Safety Information**
  - **System data (system descriptions, piping & instrumentation diagrams, flow diagrams)**
  - **Hazard and operability (HAZOP) analyses**
  - **Hazard analyses (criticality, chemical, fire, radiation, external events)**

ISA Procedure

- Formal process to govern execution of the ISA
  - ISA inputs and outputs will be in accordance with applicable quality assurance program requirements
- Hazard identification will utilize the HAZOP methodology
  - Consistent with Urenco approach
  - Maximizes use of Urenco safety analysis and design information
  - Facilitates integration of Urenco personnel into ISA team
- HAZOP Guidewords expanded to include consideration of complete range of U. S. natural phenomena (e.g., tornadoes, hurricanes, etc.)
- Defines hazard analysis process to establish Items Relied On For Safety (IROFS) through development of accident sequences and risk index tables
  - Consistent with guidance in NUREG-1520, "Standard Review Plan for the Review of a License Application for a Fuel Cycle Facility"

ISA Team

- ISA team will be consistent with requirements of 10 CFR 70.62, "Safety Program and Integrated Safety Analysis," as well as guidance in NUREG-1513, "Integrated Safety Analysis Guidance Document," and NUREG-1520
- Team Composition
  - Team Leader
  - Scribe
  - Criticality Expert
  - Fire Safety Expert
  - Chemical Safety Expert
  - Radiation Safety Expert
  - Process Design Expert (Urenco)
  - Operations and Maintenance Expert (Urenco)
  - Engineering Design Expert (Architect/Engineer)

ISA Execution

- **Non-Classified Systems**
  - **ISA to be conducted using team and process described in this presentation**
  - **Probabilistic risk assessment approach to be used only for high consequence events such as plane crash into tails storage pad**
  - **HAZOP methodology and risk index approach to be applied for all other hazard analyses**
- **Classified Systems**
  - **Urenco to conduct ISA using appropriate team of experts (including Urenco members of U.S. ISA team) with the proper security clearances**
  - **Urenco ISA team will follow U.S. ISA team procedure**

ISA Execution (cont'd)

- **Procedure-driven process implemented by ISA Team**
  - **Validate HAZOP analyses from Urenco and A/E**
  - **Identify accidents resulting in consequences of concern**
  - **Generate accident sequences**
  - **Identify initiating event frequency**
  - **Determine accident likelihoods**
  - **Determine consequences for potential accident sequences**
  - **Develop Risk Index Tables (Uncontrolled / controlled)**
  - **Identify IROFS**
  - **Confirm IROFS design specifications**
  - **Assess Management Controls and Measures**
  - **Review system integration for system and IROFS interactions**

ISA Documentation

- ISA Supporting Documentation – Complete project file
  - Process Safety Information
  - Minutes of Team Meetings
  - Action Items and Resolutions of the Action Items
  - Calculations, technical evaluations, data, etc,
- ISA Summary – To be submitted as part of license application
  - Site Description
  - Facility Description
  - ISA Team Qualifications
  - Principle Processes
  - Process Safety Information
  - Accident Methodologies
  - Accident Summaries
  - Items Relied on for Safety
  - Demonstration of Compliance to 10 CFR 70.61, "Performance requirements"
  - Will reflect Results of Classified and Non-classified ISAs

Summary

- ❑ LES has developed an ISA Plan to support the License Application
- ❑ ISA approach is fully compliant with 10 CFR 70.62 requirements and the guidance provided in NUREG-1520 and NUREG-1513
- ❑ ISA will make use of the existing Urenco information to the maximum extent
  - Validated using full ISA Team and guided by a project procedure
- ❑ ISA inputs and outputs will be developed in accordance with the quality assurance program requirements
- ❑ ISA documentation will be developed and retained as a project record
- ❑ Key ISA results will be provided in the ISA Summary

ENCLOSURE (7)

NEF Safety Analysis Report (December 2003), Table 3.7-2

ML04005619

Accident Identifier (See Table 3.7-1)	Description
DC1-9 (continued)	The frequency index number for the initiating event, based on the combination of (1) through (5) above, was conservatively assumed to be (-2). The NUREG-1520 criteria – No failures of this type in this facility in 30 years - applies. The failure frequency index was conservatively selected based on evidence from history of similarly designed Urenco European plants, with a combined plant history of greater than 30 years and have not had any criticality events. A failure probability index of (-2) was selected for IROFSC1. This corresponds to an administrative IROFS for routine planned operation per NUREG-1520. IROFSC1 provides procedures and training relative to proper filling of NaF traps including requirements for independent verification. Training will be conducted annually. A failure probability index of (-2) was selected for IROFS3. This corresponds to a single active engineered IROFS per NUREG-1520 criteria. IROFS3 will be tested annually. The detailed description of the interaction evaluations supporting the criticality safety requirements, associated safety margins and analysis assumptions is found in Chapter 5.
EC3-1	The initial failure (initiating event) is failure of criticality enrichment control by failing to properly control the UF_6 enrichment process. This failure is initiated by the improper setting of the cascade enrichment control devices. The maximum enrichment of a single cascade is limited by mechanical enrichment control devices. The initial set of conditions or combination of conditions, that need to be fulfilled to allow enrichments high enough to compromise the critical geometries and moderation controls in place, include the following: (1) The mechanical control enrichment device on each cascade must be broken, or not fitted, or fitted incorrectly; (2) When a change of enrichment occurs, the mechanical enrichment control device setting must be calculated incorrectly;

Accident Identifier (See Table 3.7-1)	Description
EC3-1 (continued)	(3) Independent checks on the setting calculation must fail to identify the error; (4) Cascade and assay samples must also not recognize the high enrichment, despite assay samples being analysed using the on-line mass spectrometer, producing representative results in minutes; (5) A leak must exist within the product system to cause breakdown build-up in an otherwise safe by geometry component, or allow moderator into the product cylinder; (6) The above errors must exist for a significant period of time to allow a significant build up of breakdown and/or moderator. The detailed description of the criticality safety evaluations, associated safety margins and analysis assumptions used in determining the conditions for criticality is found in Chapter 5. For the uncontrolled accident sequence there is a failure of criticality enrichment control by failing to properly control the UF_6 enrichment process. A criticality event is assumed to result for this accident sequence. A criticality event is assumed to result in a high consequence to the worker and public. The risk of this sequence, if uncontrolled, would be minimized by the high vacuum standard of the plant. For the controlled accident sequence, the preventive measures include: (1) an enhanced administrative control of the mechanical enrichment control device setting calculation (IROFSC6) and (2) an enhanced administrative control on the independent monitoring of cascade and assay enrichment levels following a change to the enrichment setting as well as a periodic check (IROFSC7). The frequency index number for the initiating event (failure of the mechanical device) is determined to be (-2), no failures of this type in this facility in 30 yrs per NUREG-1520 criteria. This failure frequency index was selected based on evidence from history of similarly designed Urenco European plants, which have a combined plant history of greater than 30 yrs, and have not had a failure of this type. It has been conservatively assumed that no credit for the initial conditions needed to preclude the failure has been accounted for in the frequency index.

Accident Identifier (See Table 3.7-1)	Description
EC3-1 (continued)	A failure probability index of (-2) was selected for IROFSC6. This corresponds to an enhanced administrative IROFS for routine planned operation per NUREG-1520. IROFSC6 provides for procedures and training relative to performing the mechanical enrichment control device setting calculations, including requirements for independent verification. Training will be conducted annually. A failure probability index of (-2) was selected for IROFSC7. This corresponds to an enhanced administrative IROFS for routine planned operation per NUREG-1520. IROFSC7 provides procedures and training relative to performing an independent verification/monitoring of cascade and assay enrichment levels. This verification will be accomplished independent from the IROFSC6 verification. Training will be conducted annually.
EC4-1	The initial failure (initiating event) is an operator error that results in an incorrect sampling sequence. .This causes excessive flow of UF_6 resulting in the evacuating rig carbon trap becoming saturated. For the uncontrolled accident sequence, a UF_6 plug forms on the discharge line of the vacuum pump, causing high pressure in the vacuum pump and thus failing seals leading to a release of UF_6 to the process services corridor. This event has been calculated to result in a intermediate consequence to the worker. For the controlled accident sequence, the preventive measure is a fail-safe, hard-wired, high carbon trap weight trip of the vacuum pump (IROFS3). The frequency index number for the initiating event was determined to be (-2). The NUREG-1520 criteria – no failures of this type in this facility in 30 yrs – applies. This failure frequency index was selected based on evidence from history of similarly designed Urenco European plants, which have a combined plant history of greater than 30 yrs, and have not had a failure of this type. A failure probability index of (-2) was selected for IROFS3. This corresponds to a single active engineered IROFS per NUREG-1520 criteria. IROFS3 will be tested annually.

ENCLOSURE (8)

RAI ISA-45 and LES's Response (May 19, 2004)

ISA-45 Tables 3.7-1, 3.7-3, 3.7-4, 3.8-1 and 3.8-2

Clarify whether it was your intent to rely upon the design of your facility in the license application in lieu of designating IROFS for components/equipment when evaluating accident sequences for compliance with 10 CFR 70.61.

10 CFR 70.62(a) requires the establishment and maintenance of a safety program to demonstrate compliance with the performance requirements of 10 CFR 70.61.
10 CFR 70.65(a) requires a description of this safety program to be submitted in the license application. 10 CFR 70.65(b)(4) requires in the ISA Summary information to demonstrate compliance with the performance requirements of 10 CFR 70.61.

In the criticality analyses that were performed to support the ISA, the applicant made certain assumptions (e.g., design included favorable geometry equipment) and concluded that certain event sequences would be prevented. These assumptions related to specific systems or components that were not identified as IROFS. In addition, Table 5.1-2 lists other specific design attributes of the facility that are also not identified as IROFS. The applicant has placed these design assumptions and attributes under the Configuration Management system whereby any changes would be specifically evaluated. The staff considers that these design attributes are fundamental to the application review, and, if changes are made, in addition to the Configuration Management controls, the changes would need to be submitted for staff review in a license amendment as required under 10 CFR 70.72(c)(1)(i). Under 10 CFR 70.72(c)(1)(i), no changes to the site, structures, processes, systems, equipment, components, computer programs, and activities of personnel, without prior Commission approval, that have not been previously described in the ISA Summary.

LES Response

10 CFR 70.61, Performance requirements, requires only "credible" events to have IROFS identified. For "credible" accident sequences, IROFS have been designated as required to meet the requirements of 10 CFR 70.61. Designs that inherently preclude "credible" events of consequence would not be identified as IROFS. In the next revision to the SAR, Section 3.1.1.3.2 will include a more detailed definition of "credible." The definition will include detail from NUREG-1520, Section 3.4.3.2(9), Acceptance Criteria for the Definition of "Credible." Furthermore, a justification basis will also be included such that, for certain designs of favorable geometry, any postulated event may be of "negligible likelihood" allowing failure of the design to be deemed a "not credible" event. This additional portion of the definition is provided below.

> *Additionally, the determination of "not credible" can apply to permanently installed passive design features (e.g., tanks, piping) of the facility that do not rely on human interface to perform the safety function (i.e., termed "safe by geometry"). These features must also meet the criterion that the only credible means to effect a change that might result in a failure to function, would be to implement a design change (e.g., geometry deformation as a result of a credible event would not adversely impact the performance of the safety function). The evaluation of potential credible means (which would include items such as bulging, corrosion, breach of confinement and subsequent accumulation of material), includes consideration of adequate controls to ensure the double contingency principle is met. The configuration management system required by 10 CFR 70.72 (implemented by the NEF Configuration Management Program described in Chapter 11), adequately ensures maintaining the safety function and assures compliance with the double contingency principle, as well as the defense-in-depth criterion of 10 CFR 70.64(b).*

It is recognized that passive design features that are intermittently utilized by operator interface (e.g., carts, racks) have a human interface relationship that raises the potential event sequences to a "credible" category.

This definition of "not credible" is consistent with the NUREG-1520 (same Section cited above) discussion of "negligible likelihood" and "not credible."

Apart from the question regarding "favorable geometry" categorization, this RAI introduced an NRC Staff position on the application of 10 CFR 70.72, "Facility changes and change process" (which requires a licensee to establish a configuration management system). The following discussion is proposed to clarify the LES position on implementation of 10 CFR 70.72.

Whether or not a design attribute is identified as an IROFS, 10 CFR 70.72(c) lists the criteria that, if satisfied, would allow licensee to implement design changes without NRC prior review or approval.

(a) Criterion of 10 CFR 70.72(c)(1)(i) (*i.e., the subpart cited in RAI*): This criterion would require NRC pre-approval only if the change:

(1) Create new types of accident sequences not described in the ISA Summary, and

(2) Only if the new sequence requires mitigation or prevention to meet the performance requirements of 10 CFR 70.61.

Since LES does not present "favorable geometry equipment" as IROFS, they are not explicitly described in the ISA Summary, the 10 CFR 70.72(c)(1)(i) criterion would apply to any design changes to evaluate whether NRC prior approval is required. If a change to favorable geometry equipment were desired, such that mitigation or prevention becomes necessary (i.e., an event becomes "credible"), prior NRC approval would be required. If changes are evaluated to maintain the definition of "not credible," that change could be implemented without NRC prior approval.

However, if favorable geometry equipment were made IROFS, the process would be governed by 10 CFR 70.72(c)(2) and (3). Furthermore, since the favorable geometry is associated with criticality safety, it is expected that a second IROFS for the associated sequence(s) would be identified in the ISA Summary, as reflected in the LES response to RAI ISA-42.

(b) Criteria of 10 CFR 70.72(c)(2) and (3): If the design attribute were listed as an IROFS (and therefore described in the ISA Summary):

(1) 10 CFR 70.72(c)(2) would allow the licensee to "remove" (without prior NRC review or approval) an IROFS that is listed in the ISA Summary provided there is "at least an equivalent replacement of the safety function." The licensee has the flexibility to include in the change new and/or enhanced safety functions that provide "equivalent" safety, and not require NRC prior approval.

(2) 10 CFR 70.72(c)(3) would allow the licensee to "alter" (without prior NRC review or approval) an IROFS that is listed in the ISA Summary provided it was not a sole IROFS. "Altering" favorable geometry equipment could also be possible under this provision without prior NRC approval.

If LES were to reorganize these favorable geometry design attributes to IROFS (and identify additional IROFS for the event sequence), a wider range of configuration management control would appear to be possible without prior NRC review or approval, as allowed by 10 CFR 70.72.

Additional management measure attributes, specific to these design features, are discussed further below. General Management Measures and QA Program attributes associated with personnel training and qualification, audits and assessments, and records also apply as discussed in SAR Chapter 11, "Management Measures," and its Appendix A, "QA Program Description."

Procedures, Surveillance Testing, Maintenance: In addition to the design change control portion of the configuration management system, all plant activities, including surveillance testing and maintenance activities of design features that have any potential to impact the favorable design attribute, will be performed only in accordance with written and approved procedures. Procedure approval configuration management controls will assure activities are not implemented that could create new types of accident sequences not described in the ISA Summary (per criterion of 10 CFR 70.72(c)(1)(i)).

In the next revision to SAR Section 11.4.4, "Changes to Procedures," the requirement for "criticality safety review" will be clarified (see also response to RAI ISA-2) to reflect the performance of a nuclear criticality safety evaluation for all changes with the potential to affect criticality safety. This independent criticality safety evaluation is developed and independently reviewed by qualified criticality safety engineers.

Degraded and Non-Conforming Conditions and Corrective Action Process: Identification of any nonconforming condition that potentially impacts a design feature will clearly identify and describe the characteristics that do not conform to specified criteria. Nonconformance documentation will be reviewed by the responsible affected organization and recommended dispositions of nonconforming items proposed in accordance with approved procedures. The review will include determining the need for additional corrective actions according to the requirements of Corrective Action Process. In addition, organizations affected by the nonconformance will be notified.

Reporting: Any "favorable geometry" design feature that is discovered to function outside its analyzed design basis, in conjunction with Corrective Action Process activities described above, will be reported to the NRC. 10 CFR 70, Appendix A, (b)(1), requires reporting to the NRC, with follow-up written report, any event or condition that results in the facility being in a state that was not analyzed, was improperly analyzed, or is different from that analyzed in the Integrated Safety Analysis, and which results in failure to meet the performance requirements of 10 CFR 70.61.

Based on the discussion above, it is concluded that requirements of the regulations, i.e., the configuration management and change process requirements of 10 CFR 70.72, provide adequate controls to ensure changes receive appropriate NRC prior review and approval.

ISA-46 Tables 3.7-1, 3.7-3, 3.7-4, 3.8-1 and 3.8-2

Clarify how IROFS relate to the accident sequences, other IROFS, and management measures.

10 CFR 70.65(b)(4) requires in the ISA Summary information to demonstrate compliance with the performance requirements of 10 CFR 70.61.