Exelon Nuclear
200 Exelon Way
Kennett Square, PA 19348

www.exeloncorp.com

Exelon Nuclear

10 CFR 50.55a

April 30, 2010

U.S. Nuclear Regulatory Commission
Attn: Document Control Desk
Washington, DC 20555

Peach Bottom Atomic Power Station, Units 2 and 3
Renewed Facility Operating License Nos. DPR-44 and DPR-56
NRC Docket Nos. 50-277 and 50-278

Subject: Response to Request for Additional Information - Submittal of Relief Requests I3R-48 and I3R-49 Associated with the Third Inservice Inspection (ISI) Interval

References:

1) Letter from P. B. Cowan (Exelon Generation Company, LLC) to U.S. Nuclear Regulatory Commission, "Submittal of Relief Requests I3R-48 and I3R-49 Associated with the Third Inservice Inspection (ISI) Interval," date August 19, 2009

2) Letter from J. D. Hughey (U.S. Nuclear Regulatory Commission) to C. G. Pardee (Exelon Generation Company, LLC), "Peach Bottom Atomic Power Station, Units 2 and 3: Request for Additional Information Regarding Requests for Relief I3R-48 and I3R-49 (TAC NOS. MD2154 AND MD2155)," dated March 19, 2010

In the Reference 1 letter, Exelon Generation Company, LLC (EGC), requested relief from the American Society of Mechanical Engineers (ASME) Boiler and Pressure Vessel Code, Section XI, "Rules for Inservice Inspection of Nuclear Power Plant Components." These reliefs apply to the third 10-year interval Inservice Inspection (ISI) program, which concluded on November 4, 2008 for Peach Bottom Atomic Power Station (PBAPS), Units 2 and 3. The third 10-year ISI interval complied with the ASME Boiler and Pressure Vessel Code, Section XI, 1989 Edition, no Addenda. In the Reference 2 letter, the U.S. Nuclear Regulatory Commission requested additional information. Attached is our response to this request.

Included in our response is a new relief request (I3R-50); this relief request resulted from discussions with the NRC staff in order to address the response to RAI 7 attached.

No commitments are contained in this letter.

A047
NRR

Should you have any questions concerning this letter, please contact Tom Loomis at (610) 765-5510.

Sincerely,

Pamela B. Cowan
Director - Licensing & Regulatory Affairs
Exelon Generation Company, LLC

Attachment: Response to Request for Additional Information Involving Relief Requests I3R-48 and I3R-49

cc: USNRC Region I, Regional Administrator
USNRC Senior Resident Inspector, PBAPS
USNRC Project Manager, PBAPS
R. R. Janati, Bureau of Radiation Protection
S. T. Gray, State of Maryland

Attachment

Response to Request for Additional Information Involving Relief Requests I3R-48 and I3R-49

Question:

General – Information Required on Requests for Relief I3R-48 and I3R-49, ASME Code, Section XI, Examination Categories B-A, B-D, and B-K, Items B1.22, B3.90, B3.100, and B10.10 (PBAPS, Units 2 and 3)

RAI 1: The licensee has provided some limited written descriptions and drawings depicting interferences that cause scanning difficulties due to insulation brackets and rings, and the proximity of mirror insulation. However, no discussion of why this insulation cannot be removed is given. Please discuss whether the limited examinations caused by interference from the insulation cannot be remedied by removal of the subject insulation and supporting appurtenances in all cases.

Response:

The mirror insulation for the reactor pressure vessel shell at Peach Bottom Atomic Power Station (PBAPS) is self-supporting. There are support brackets welded to the reactor pressure vessel that support upper and lower support rings. The mirror insulation panels are stacked on the upper and lower support rings, and a lattice of flat bars connects the rings. When a panel is removed to provide access, the panel above is free to fall such that panels must be supported temporarily using dunnage.

An attempt was made to remove portions of the insulation and provide more access for both vessel shell and nozzle-to-vessel shell welds. An attempt to use temporary supports could not provide safe access for the inspections. Different props were tried but none proved satisfactory.

Air bladders were also used in an attempt to increase access. The bladders were used to push the insulation away from the area being examined. This required the bladder to be placed opposite the exam area and inflated to move the insulation as far as possible. The bladders did not move the insulation far enough to force the convection stops away from the exam area. This method was also determined to be impractical.

Removal of the reactor pressure vessel shell mirror insulation is impractical for several reasons. There is no lay-down area available for the large number of mirror panels that would need to be removed to provide safe working conditions. During a previous reactor pressure vessel outside diameter exam, the panels were removed and stacked in the available open areas and were damaged. Repeated storage could require panel replacement. Also, for those examinations limited by the insulation support rings, welding on the reactor vessel would be necessary to restore these attachments if they were removed.

Accordingly, the insulation is considered to be a design limitation reducing the ability to meet code examination requirements.

With regards to the reactor bottom head insulation, the inside of the skirt is approximately 3'- 6" high, with an 18" access hatch, covered with mirror insulation that is a permanent type, secured with screws and lock washers. This insulation is not designed for removal (see Enclosure 1

photographs of the general region) and is subject to damage if removed. Therefore, the insulation would be considered a design limitation that would prevent examination.

Question:

Request for Relief I3R-48, Part A, ASME Code, Section XI, Examination Category B-A, Items B1.12, B1.22, and B1.30, Pressure Retaining Welds in Reactor Vessel PBAPS, Units 2 and 3

Reactor Pressure Vessel (RPV) Longitudinal Shell Welds (RPV-V1B and RPV-3A/-B/-C, PBAPS, Unit 2)

RAI 2: Attachment A10 of the licensee's submittal for RPV Longitudinal Shell Weld RPV-V1B states that an indication was found to be allowable in accordance with the 1980 Edition of the ASME Code. It is unclear why the licensee is using the 1980 Edition of the ASME Code here, while the stated ASME Code of record for the third interval is the 1989 Edition. Please confirm the ASME Code of record for the third ten year interval inservice inspection program at PBAPS, Unit 2, and discuss the use of the earlier ASME Code reference.

Response:

The datasheet included on page 2 of Attachment A10 in our submittal for reactor pressure vessel longitudinal shell weld RPV-V1B, references the 1980 Edition of the ASME Code. This is an error in the datasheet. It should reference the 1989 Edition since the ASME Code of record for the third ISI interval is the 1989 Edition. The Indication Resolution Record included in the report provided by IHI Southwest Technologies, Inc. (IHISWT) for weld RPV-V1B does reference the correct edition of the code (see Enclosure 2).

This issue has been incorporated into the PBAPS corrective action program, and PBAPS Programs Engineering has received corrected datasheets from IHISWT (see corrected page in Enclosure 2).

Question:

RAI 3: The limitations specified for RPV Longitudinal Welds RPV-V3A, -B and -C are stated as being caused by the core spray and feedwater spargers. It is unclear how these components interfere with the examination since no description of the ultrasonic (UT) scanning apparatus and no drawings or sketches were provided of the interferences caused by these components. Please submit detailed and specific information to support the basis for limited examination for RPV Longitudinal Welds RPV-V3A, -B, and -C. Include descriptions (written and/or sketches, as necessary) and as applicable, describe nondestructive examination (NDE) equipment to show accessibility limitations.

Response:

The Automated Ultrasonic Tool (AUT) that was used for examinations of RPV-V3A, -B, and -C was the AIRIS-21 tool, which examines from the inside of the vessel. Due to its size and shape, this tool enabled a greater examination percentage. The AIRIS-21 is 22" wide, 24" tall, and 2"

thick. This thin design gives the tool an advantage in tight, narrow conditions; however, it does not have enough clearance to scan behind Unit 2's Core Spray and Feedwater Spargers. The Core Spray and Feedwater Spargers physically cover the welds as seen in the Enclosure 3 drawing and have less than ½" clearance to the vessel wall.

Question:

RPV Closure and Bottom Head Meridional Welds (CH-MA, RPV-MC, RPV-ME, and RPV-MF (PBAPS, Unit 3)

RAI 4: For RPV Closure Head Meridional Weld CH-MA, the examination was limited due to the closure head lifting lugs. However, sufficient discussion (written and sketches) of scanning limitations has not been included. For each of the techniques applied, describe specifically how the lifting lugs impacted the volumetric coverage. The licensee should also verify and state that whether indications were found during the ultrasonic examinations, as it is not clearly stated in the submittal.

Response:

For reactor pressure vessel closure head meridional weld CH-MA, the examination was limited due to a 12" closure head lifting lug. The lug is located on top of the weld and can be seen in the Enclosure 4 drawings. The indications in the CH-MA weld were discussed in a letter to the U.S. Nuclear Regulatory Commission (Letter from M. P. Gallagher (Exelon Generation Company, LLC) to U.S. Nuclear Regulatory Commission, "Submittal of Analytical Evaluation of Reactor Pressure Vessel Closure Head Indications," dated October 23, 2001).

Question:

RAI 5: From the sketches provided for RPV Bottom Head Meridional Weld RPV-MC, it is unclear why the examination length of the weld is only 56 inches as opposed to 59 inches for welds RPV-MA and RPV-MB. From the sketch provided, there does not appear to be any additional limitations. Please provide a more detailed description explaining this difference.

Response:

Detailed vessel fabrication drawings, vessel insulation drawings and NDE examination reports were reviewed to determine the cause of the differences in examination length above the vessel skirt between RPV-MC and RPV-MA and -MB. All three weld examination reports cited the support skirt and the insulation convection stop ring as the reason for the limited exam coverage. However, in reviewing the plant drawings, there is no apparent configuration difference in insulation or vessel fabrication shown around the RPV-MC weld and the RPV-MA or RPV-MB welds that accounts for the difference in coverage length when this examination was performed in 2001. The insulation may have a slightly bent or misshapen piece that is causing the additional obstruction, but this cannot be verified without a field walkdown of the reactor vessel.

An action item has been entered into the corrective action program to document more thoroughly the limitations of the RPV-MC weld during the fourth interval examination. The next scheduled exam of RPV-MC is 2011.

Question:

RAI 6: The licensee noted for RPV Bottom Head Meridional Welds RPV-ME and RPV-MF that no scanning was performed inside the vessel support skirt due to As Low As Reasonably Achievable (ALARA) radiation exposure considerations. Please provide an estimate of the additional radiation dose that would be received if the examination were conducted from the inside of the vessel support skirt. Also, discuss whether visual examination, either remote or direct, could be used to augment the inaccessible portion of the welds on the inside of the RPV support skirt.

Response:

A review of dose surveys for these locations indicate that near 240 degrees azimuth (location of RPV-ME), there is a contact dose rate of 240 mRem/hr and a 1-foot reading of 160 mRem/hr. Near 300 degrees azimuth (location of RPV-MF), there is a hot spot of 1.2 Rem/hr and 1-foot reading of 400 mRem/hr. In a previous review, it was estimated that 40 person-hours would be required to remove and reinstall the insulation which would result in cumulative doses up to 16 Rem at 1-foot. The coverage obtained was for the portion of the weld outside of the skirt. Further review of diagrams indicate that the weld buildup from the skirt (7.5 inches), and transducer coverage (reduced by approximately 3 inches), would result in only a maximum of approximately 88% coverage. Additionally, the inside of the skirt is approximately 3'- 6" high, with an 18" access hatch, covered with mirror insulation that is a permanent type secured with screws and lock washers. The 18" hatch can be used to gain access to the inside of the skirt. However, this insulation is not designed for removal (see Enclosure 1 photographs of the general region) and is subject to damage if removed. Therefore, the insulation would be considered a design limitation that would prevent visual examination either remote or direct.

Question:

RPV Shell-to-Flange Weld (RPV-C6 (PBAPS, Units 2 and 3)

RAI 7: The licensee stated that the examinations of the RPV shell-to-flange welds were performed to requirements contained in ASME Code, Section XI, Appendix VIII per the performance demonstration initiative (PDI) program. According to Article I-2110 of ASME Code, Section XI, Appendix I, shell-to-flange welds are excluded from the requirements of ASME Code, Section XI, Appendix VIII. Please verify and state the appropriate ASME Code section that was followed for this examination category. If ASME Code, Section XI, Appendix VIII qualified techniques were applied, please discuss whether this alternative was approved by the NRC.

Response:

Enclosure 12 contains a proposed alternative to use PDI methods for the shell-to-flange welds for PBAPS, Units 2 and 3.

Question:

RAI 8: On the sketch provided (PBAPS, Unit 2 only) for RPV Shell-to-Flange Weld RPV-C6, there appears to be a vertical section examined in addition to the shell-to-flange weld. Please verify that this section was not included in the total exam coverage and re-submit a correct coverage sketch.

Response:

A comparison of the examination coverages for RPV-C6 on Units 2 and 3 found that they were similar (84% for Unit 2 vs. 83% for Unit 3). It appears that the diagram inadvertently shaded the vertical weld length on the Unit 2 diagram on Attachment A1, page 3 of 3. RPV-V5B was separately examined in 2002 with 100% coverage obtained. A revised figure is included (See Enclosure 5).

Question:

Request for Relief I3R-48, Part B, ASME Code, Section XI, Examination Category B-A, Item B1.51, Pressure Retaining Welds in Reactor Vessel (PBAPS, Units 2)

RAI 9: On RPV shell course number 2, the licensee requested relief from examining 100% of the ASME Code-required volume for repair Weld RPV-RW1 due to limitations caused by proximity of a jet pump riser bracket. On the sketch provided, there was a second repair weld that is not mentioned in the text of the request for relief. Please verify and state whether full volumetric ASME Code coverage was obtained for the second repair weld.

Response:

On the sketch provided for reactor pressure vessel shell course number 2, there is a second repair weld that is not included in the text of our original submittal. Repair weld RPV-RW2 was not included because 90.9% examination coverage was achieved (see Enclosure 6).

Question:

Request for Relief I3R-48, Part C, ASME Code, Section XI, Examination Category B-D, Item B3.100, Full Penetration Welded Nozzles in Vessels (PBAPS, Unit 3)

RAI 10: The licensee has requested relief regarding, the inspection of the main recirculation inlet nozzle inner radii listed in Table RAI 10 below for PBAPS, Unit 3. The licensee specifies that Zone 1 (Z1) is restricted due to an insulation support ring and Zone 2 (Z2) is not restricted. The licensee did not provide a description of the difference between Zone 1 and Zone 2 for these welds. The licensee should submit a description (written and/or sketches) of the different zones and why the total exam coverage of Zones 1 and 2 is not combined.

Table RAI 10 – ASME Code, Section XI, Examination Category B-D (PBAPS, Unit 3)			
Code Item	Weld ID	Weld Type	Coverage Obtained
B3.100	N2A-IRS	Main Recirc Inlet Nozzle Inner Radius	Z1=74.7% Z2=100%
B3.100	N2B-IRS	Main Recirc Inlet Nozzle Inner Radius	Z1=75.3% Z2=100%
B3.100	N2C-IRS	Main Recirc Inlet Nozzle Inner Radius	Z1=83.3% Z2=100%
B3.100	N2G-IRS	Main Recirc Inlet Nozzle Inner Radius	Z1=76.0% Z2=100.0%

Response:

Enclosure 7 contains sketches that show the transducer positions for examining Zone 1 and Zone 2. The zones have been combined for purposes of calculating the ASME Code examination coverage. Below is the combining and recalculation of the coverage obtained.

Table RAI 10 – ASME Code, Section XI, Examination Category B-D (PBAPS, Unit 3)			
Code Item	Weld ID	Weld Type	Coverage Obtained
B3.100	N2A-IRS	Main Recirc Inlet Nozzle Inner Radius	87.4%
B3.100	N2B-IRS	Main Recirc Inlet Nozzle Inner Radius	87.7%
B3.100	N2C-IRS	Main Recirc Inlet Nozzle Inner Radius	91.7%*
B3.100	N2G-IRS	Main Recirc Inlet Nozzle Inner Radius	88%

* With the recalculated coverage, the N2C-IRS exceeds the necessary code coverage. Accordingly, relief is no longer requested for this weld.

Question:

Request for Relief I3R-49, Part A, ASME Code, Examination Category B-K, Items B10.10 and B10.20, Integral Attachments for Class 1 Vessels, Piping, Pumps, and Valves (PBAPS, Units 2 and 3)

RAI 11: The licensee invoked ASME Code Case N-509, which lists Examination Category B-K, and provides alternative requirements for integral attachments of vessels, piping, pumps, and valves. ASME Code Case N-509, "*Alternative Rules for the Selection and Examination of Class 1, 2, and 3 Integrally Welded Attachments, Section XI, Division 1*," is conditionally acceptable according to an earlier revision of Regulatory Guide 1.147 (RG 1.147), "*Inservice Inspection Code Case Acceptability*." The NRC condition for acceptable use was that a minimum 10% sample of integrally welded attachments for each item in each ASME Code class shall be examined during each interval. State whether the ASME Code Case N-509 condition for acceptance was applied for all Class 1 integral attachment welds.

Response:

The NRC condition for acceptable use of ASME Code Case N-509 was met for the Class 1 integral attachment welds for PBAPS, Units 2 and 3 during the third 10-year interval.

For PBAPS, Unit 2, 22 of 75 Class 1 Category B-K integral attachment welds were examined, which amounts to a 29% sample. For each item number, 100% of the B10.10 welds were examined (9 of 9), 15% of the B10.20 welds were examined (9 of 59), and 57% of the B10.30 welds were examined (4 of 7).

For PBAPS, Unit 3, 20 of 89 Class 1 Category B-K integral attachment welds were examined, which amounts to a 23% sample. For each item number, 100% of the B10.10 welds were examined (9 of 9), 14% of the B10.20 welds were examined (10 of 73), and 14% of the B10.30 welds were examined (1 of 7).

Question:

Vessel Integral Attachments (Support-4(IA) and Support-5(IA)), PBAPS, Unit 2

RAI 12: The total volumetric examination coverage on vessel Integral Attachments Supports-4(IA) and -5(IA), for PBAPS, Unit 2, was 50% each. This is much less than similar vessel integral attachment supports listed in Tables RAI 12.1 and RAI 12.2, including the same components in PBAPS, Unit 3. It is unclear why the identical supports on PBAPS, Unit 3 do not have the same volumetric coverage. Provide a more detailed description (written and/or sketches) of why there is a difference in examination coverage.

Table RAI 12.1 – ASME Code, Section XI, Examination Category B-K (PBAPS, Unit 2)			
Code Item	**Weld ID**	**Weld Type**	**Coverage Obtained**
B10.10	SUPPORT-1(IA)	Stab Bar @ 0-degree	76.0%
B10.10	SUPPORT-2(IA)	Stab Bar @ 45-degree	76.0%
B10.10	SUPPORT-3(IA)	Stab Bar @ 90-degree	76.0%
B10.10	SUPPORT-4(IA)	Stab Bar @ 135-degree	50.0%
B10.10	SUPPORT-5(IA)	Stab Bar @ 180-degree	50.0%
B10.10	SUPPORT-6(IA)	Stab Bar @ 215-degree	76.0%
B10.10	SUPPORT-7(IA)	Stab Bar @ 270-degree	76.0%
B10.10	SUPPORT-8(IA)	Stab Bar @ 315-degree	76.0%
B10.20	12DCN-H152(IA)	Integral Attachment	75.0%
B10.20	H1A(IA)	Integral Attachment	70.31%
B10.20	HD4(IA)	Integral Attachment	60.7%

Table RAI 12.2 - ASME Code, Section XI, Examination Category B-K (PBAPS, Unit 3)			
Code Item	Weld ID	Weld Type	Coverage Obtained
B10.10	SUPPORT-1(IA)	Stab Bar @ 0-degree	76.0%
B10.10	SUPPORT-2(IA)	Stab Bar @ 45-degree	76.0%
B10.10	SUPPORT-3(IA)	Stab Bar @ 90-degree	76.0%
B10.10	SUPPORT-4(IA)	Stab Bar @ 135-degree	77.0%
B10.10	SUPPORT-5(IA)	Stab Bar @ 180-degree	77.0%
B10.10	SUPPORT-6(IA)	Stab Bar @ 215-degree	77.0%
B10.10	SUPPORT-7(IA)	Stab Bar @ 270-degree	76.0%
B10.10	SUPPORT-8(IA)	Stab Bar @ 315-degree	76.0%
B10.20	23DBN-H51(IA)	Integral Attachment	86.67%
B10.20	6DD-H58(IA)	Integral Attachment	86.67%
B10.20	GC1(IA)	Integral Attachment	17.0%

Response:

The exact cause for the difference in coverage between the Units for Supports -4(IA) and -5(IA) cannot be determined with the Units at full power. Enclosure 8 is the insulation arrangement for the upper vessel. As noted on this diagram, there is a "cut-out in insulation" for the stabilizer bracket. It is suspected that some movement of the insulation cylinder that surrounds the vessel could cause an obstruction around the bracket resulting in more interference than the other brackets. This shift in insulation could result in a lack of access to perform a liquid penetrant exam.

One of the requirements for performing a liquid penetrant exam is post-examination cleaning. While the penetrant materials are not considered to be detrimental to the P-3 plate in the reactor pressure vessel, it should not be baked onto the vessel. The exam residue must be removed per the requirements of the approved procedure.

As noted in the datasheet, a supplemental visual examination was performed because a liquid penetrant exam could not be performed due to access restrictions.

Question:

Piping Integral Attachment GC1(IA), (PBAPS, Unit 3)

RAI 13: The total examination coverage provided by the licensee was 17% for the Main Steam Piping Integral Attachment Weld GC1(IA), which is significantly less than all the other piping integral attachments that have limitations from hanger clamps. The drawing provided was of poor quality which made it difficult to determine where the hanger clamp interfered with the inspection of the Main Steam Piping Integral Attachment Weld GC1(IA). Please provide sketches/drawings or a more detailed description of why there is a significant reduction in examination coverage for this weld.

Response:

The hanger clamp in the picture provided runs completely over the Main Steam Piping Integral Attachment GC1(IA). There are a total of four, 2" x 2" x 10", lugs that are covered by the clamp. The GC1(IA) weld to be examined runs around the base of these 4 lugs. The perimeter of one lug (i.e., total weld length) is 24 inches. The examined portion of this 24" weld is the 2 inches at either end of the lug which are accessible at the sides of the clamp. Since there are 4 lugs, the total length of weld is 96 inches, and 16 inches of the weld is accessible for examination (i.e., 17% of examination coverage).

See Enclosure 9 for additional information.

Question:

Request for Relief I3R-49, Part B, ASME Code, Section XI, Examination Category C-C, Items C3.20 and C3.30, Integral Attachments for Class 2 Vessels, Piping, Pumps, and Valves (PBAPS, Units 2 and 3)

RAI 14: The licensee invoked ASME Code Case N-509, which lists ASME Code, Section XI, Examination Category C-C, and states requirements for integral attachments for vessels, piping, pumps, and valves. ASME Code Case N-509 is conditionally acceptable according to an earlier revision of RG 1.147. The NRC condition for acceptable use was that a minimum 10% sample of integrally welded attachments for each item in each ASME Code class shall be examined during each interval. State whether the ASME Code Case N-509 condition for acceptance was applied for all Class 2 integral attachment welds.

Response:

The NRC condition for acceptable use of ASME Code Case N-509 was met for the Class 2 integral attachment welds for PBAPS, Units 2 and 3 during the third 10-year interval.

For PBAPS, Unit 2, 30 of 145 Class 2 Category C-C integral attachment welds were examined, which amounts to a 21% sample. For each item number, 33% of the C3.10 welds were examined (1 of 3 welded attachments on one RHR heat exchanger vessel), 22% of the C3.20 welds were examined (27 of 125), and 25% of the C3.30 welds were examined (2 of 8).

For PBAPS, Unit 3, 20 of 156 Class 2 Category C-C integral attachment welds were examined, which amounts to a 13% sample. For each item number, 33% of the C3.10 welds were examined (1 of 3 welded attachments on one RHR heat exchanger vessel), 13% of the C3.20 welds were examined (18 of 136), and 13% of the C3.30 welds were examined (1 of 8).

Question:

Residual Heat Removal (RHR) Piping Integral Attachment Weld 10GB-H78(IA) (PBAPS, Unit 3)

RAI 15: From the sketch and coverage calculation sheet provided by the licensee, it is unclear why zone area B was affected by the hanger clamp. From the sketch, the hanger clamp appears to only affect portions of zone areas A and C and all of D. Please provide an explanation of why zone area B was affected by the hanger clamp.

Response:

The coverage for Area B was incorrectly calculated. After further review of the datasheet, the coverage was recalculated and coverage equals 90.5%. Accordingly, relief for weld 10GB-H78 (IA) is no longer necessary. Enclosure 10 contains the corrected coverage report. This Issue has been incorporated into the PBAPS corrective action program.

Question:

RHR Pump Support Weld (2BP35) (PBAPS, Unit 2)

RAI 16: The licensee has provided technical descriptions and sketches; however, it is not clear from the licensee's submittal how the pump support segments are inaccessible. For example, the sketches do not provide dimensions, a clear marking of each segment, or any other details of why 2 of the 3 segments are inaccessible. Please submit detailed and specific information to support the basis for inaccessibility of the pump support attachment, including descriptions (written and/or sketches, as necessary).

Response:

See Enclosure 11 for a view of the Residual Heat Removal (RHR) pump. As noted in the ISI component drawing, the pump is connected to the base plate and is stabilized by three (3) segments which connect the base plate to the cylindrical portion of the pump. These segments are not apparent from the ISI component drawing. Figure 1 provides a view of the cylindrical portion with the insulation (white material) installed. In this picture, the weld is not in view due to the insulation coverage. Figure 2 shows the segment (for this description, the segments are identified as segments 1, 2, and 3) with the insulation removed. This attachment weld was accessible for inspection. However, Figures 3 and 4 identify segments 2 and 3, which are concealed by a large, permanently installed (welded), plate which prevents examination of the welds. Accordingly, segment 1 (33.3%) was accessible for examination.

Enclosure 1

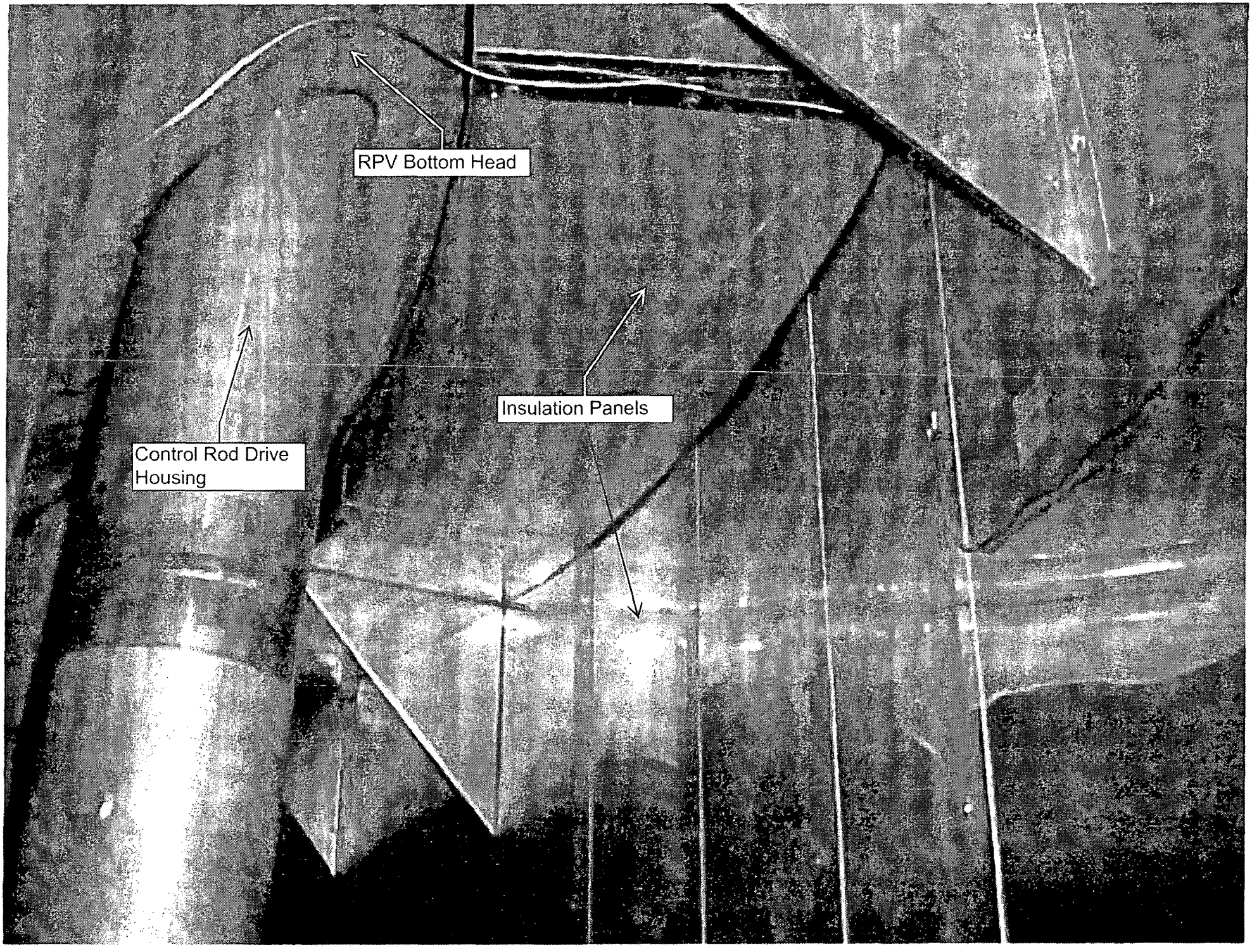
RPV Bottom Head
Insulation Panels
Control Rod Drive Housing

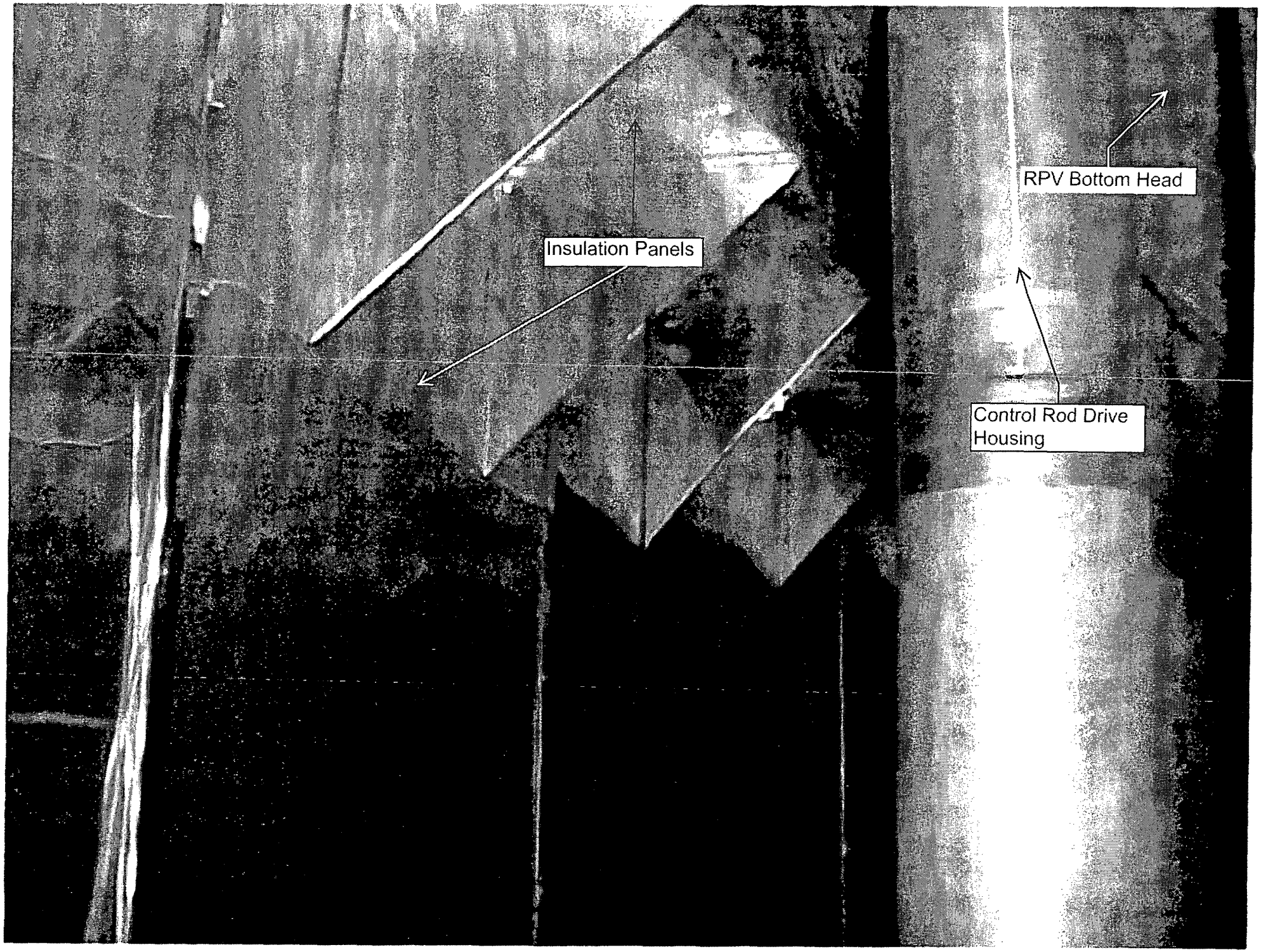
Insulation Panels
RPV Bottom Head
Control Rod Drive Housing

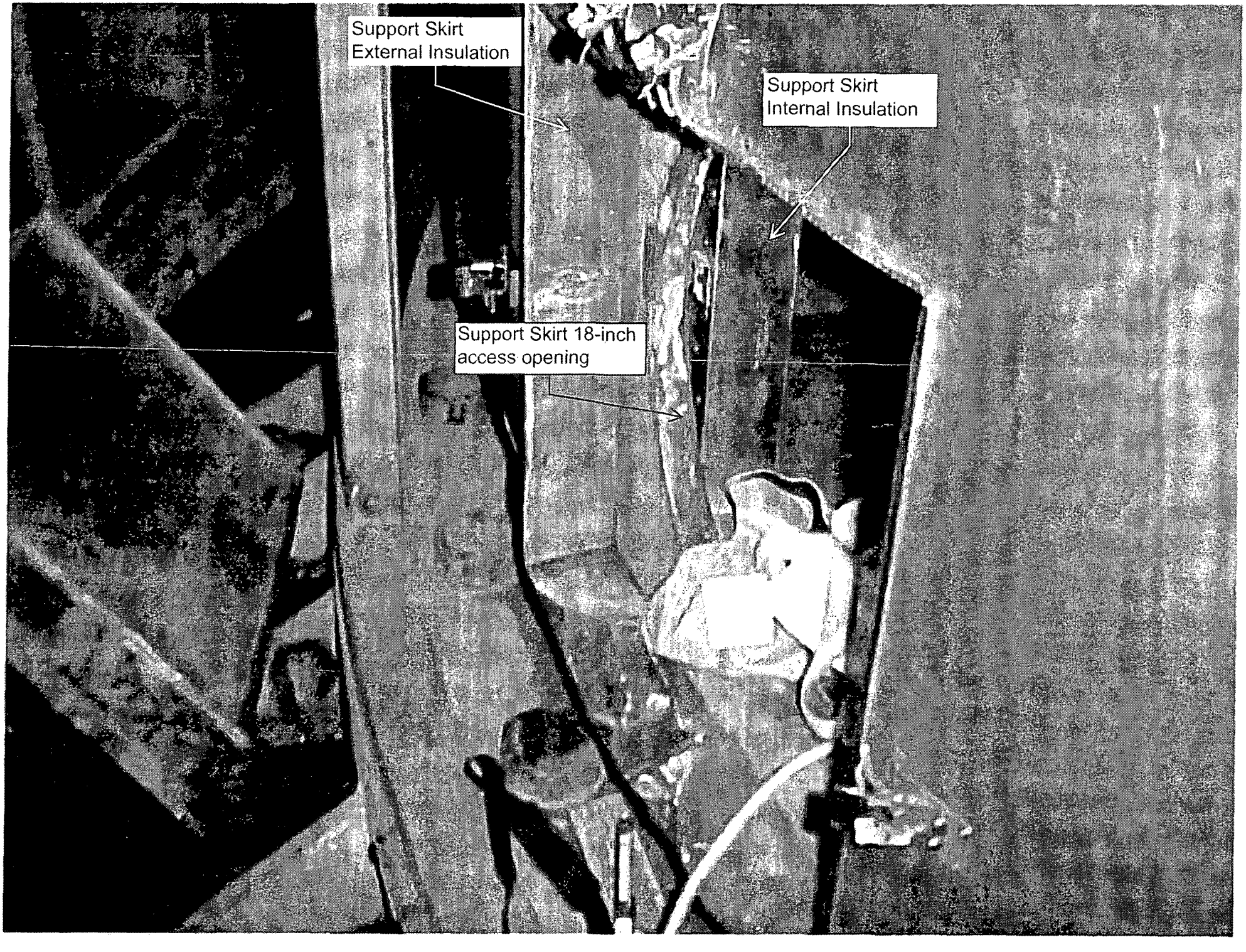
Support Skirt
External Insulation
Support Skirt
Internal Insulation
Support Skirt 18-inch
access opening

Enclosure 2

ISwT INDICATION RESOLUTION RECORD

PROJECT No. :	SITE :	SHEET No:
08-0575	Peach Bottom Unit 2	020001

EXAMINATION AREA (SYST / COMP)	LINE / SUBASSEMBLY	(IDENTIFICATION)	CALIBRATION SHEET(S)
Reactor Pressure Vessel	Ring 1 Vertical Weld @ 140°	V1B	0800301, 0800303 0800901, & 0800902

EXAMINER :	SNT LEVEL	PROCEDURE	EXAMINATION METHOD	EXAMINATION RECORD SHEET No:(s)
Preston Gaines	II	NO. ISwT-PDI-AUT2 REV 1 CHG 1 ICN 1 ☐ N / A	☐ VT ☐ PT ☐ MT ☑ UT ☐ RT ☐ ET	ID-7, ID-7RL & ID-7RL2
EXAMINER : Richard A. Riddles	SNT LEVEL II		WELD TYPE ☐ CIRCUMFERENTIAL ☑ LONGITUDINAL ☐ MERIDIONAL ☐ NOZZLE-TO-SHELL OTHER :	

Indication #1 was detected with the 55° and SLIC 40. The indication is located on the ccw of vertical weld V1B and 5.25" above RPV-C1 circ weld.

This indication was sized using the SLIC 40 transducer.

The indication has no measurable throughwall dimension.

This indication is allowable in accordance with Table IWB-3510-1 of the ASME Section XI 1989 Edition.

ATTACHMENT	RESOLUTION BY	SNT LEVEL	DATE
☑ YES	Richard A. Riddles	II	27-Sep-08
☐ NO	REVIEWED BY Hector Diaz	SNT LEVEL III	DATE 27-Sep-08

ISwT FORM UT- 02 (REV. 07/99)

ISwT EXAMINATION SUMMARY RECORD

Project No.: 08-0575 | PEACH BOTTOM POWER STATION UNIT 2 | Summary Sheet No.: 000200

SITE:	PEACH BOTTOM STATION UNIT 2
SYSTEM:	REACTOR PRESSURE VESSEL
LINE/SUBASSEMBLY:	RING 1 VERTICAL WELD @ 140-DEGREES
IDENTIFICATION:	RPV-V1B

NDE Method	Proc/Rev/Chg/ICN	NDE Examination	Calibration Sheet No.	Data Sheet No.	N R I	O T H	Resolution Record	CNF Number	Remarks
AUT	ISwT-PDI-AUT1/1/1/1	AUT0	0803305,0803306	exam 11-12	X	-	N / A	N / A	Examination no's 7 - 12.
AUT	ISwT-PDI-AUT1/1/1/1	AUT55	0803301,0803302	exam 11-12	X	-	N / A	N / A	AUT0 for thickness measurement only.
AUT	ISwT-PDI-AUT1/1/1/1	AUTSLIC40	0803303,0803304	exam 11-12	X	-	N / A	N / A	Exam limited due to proximity of jet pump
AUT	ISwT-PDI-AUT1/1/1/1	AUT55T	0800301,0800302	exam 7-12	-	X	020001	N / A	diffuser and baffle plate..
AUT	ISwT-PDI-AUT1/1/1/1	AUTSLIC40T	0800303,0800304	exam 7-10	-	X	020001	N / A	One indication was recorded with 55T and SLIC40 search units.
AUT	ISwT-PDI-AUT1/1/1/1	AUT0T	0800305	exam 7-10	X	-	N / A	N / A	This indication was sized with SLIC20, SLIC30, SLIC35, and
AUT	ISwT-PDI-AUT2/1/1/1	AUTSLIC40T	0800904	exam 7RL2	-	X	020001	N / A	SLIC40 sizing search units and found to be allowable IAW
AUT	ISwT-PDI-AUT2/1/1/1	AUTSLIC20T	0800904	exam 7RL	X	-	020001	N / A	the 1989 Edition of the ASME Code
AUT	ISwT-PDI-AUT2/1/1/1	AUTSLIC35T	0800904	exam 7RL2	X	-	020001	N / A	
AUT	ISwT-PDI-AUT2/1/1/1	AUTSLIC30T	0800904	exam 7RL	X	-	020001	N / A	

NOTES:
1. Weld RPV-V1B was examined from the inside surface using AIRIS-21 and EDAS-II examination equipment.
2. One ASME Code recordable indication was detected during this examination.
3. The examination was limited - 89.6% examination coverage was achieved.
4. Exam no. 8 & 10 were divided into two segments 8a & 8b and 10a & 10b.

****UT CALIBRATION BLOCK(s)****
D-70187-2/D70369-1

John Leonard for Steve Todd 3/9/2010

Prepared by: S. M. Todd — Date: 03-09-10
Steven J. Todd - Project Engineer

Reviewed by: [illegible] — Date: 3-9-2010
Exam Level III

Reviewed by: [illegible] (ANI) — Date: 3/9/10

Page 1 of 1

Enclosure 3

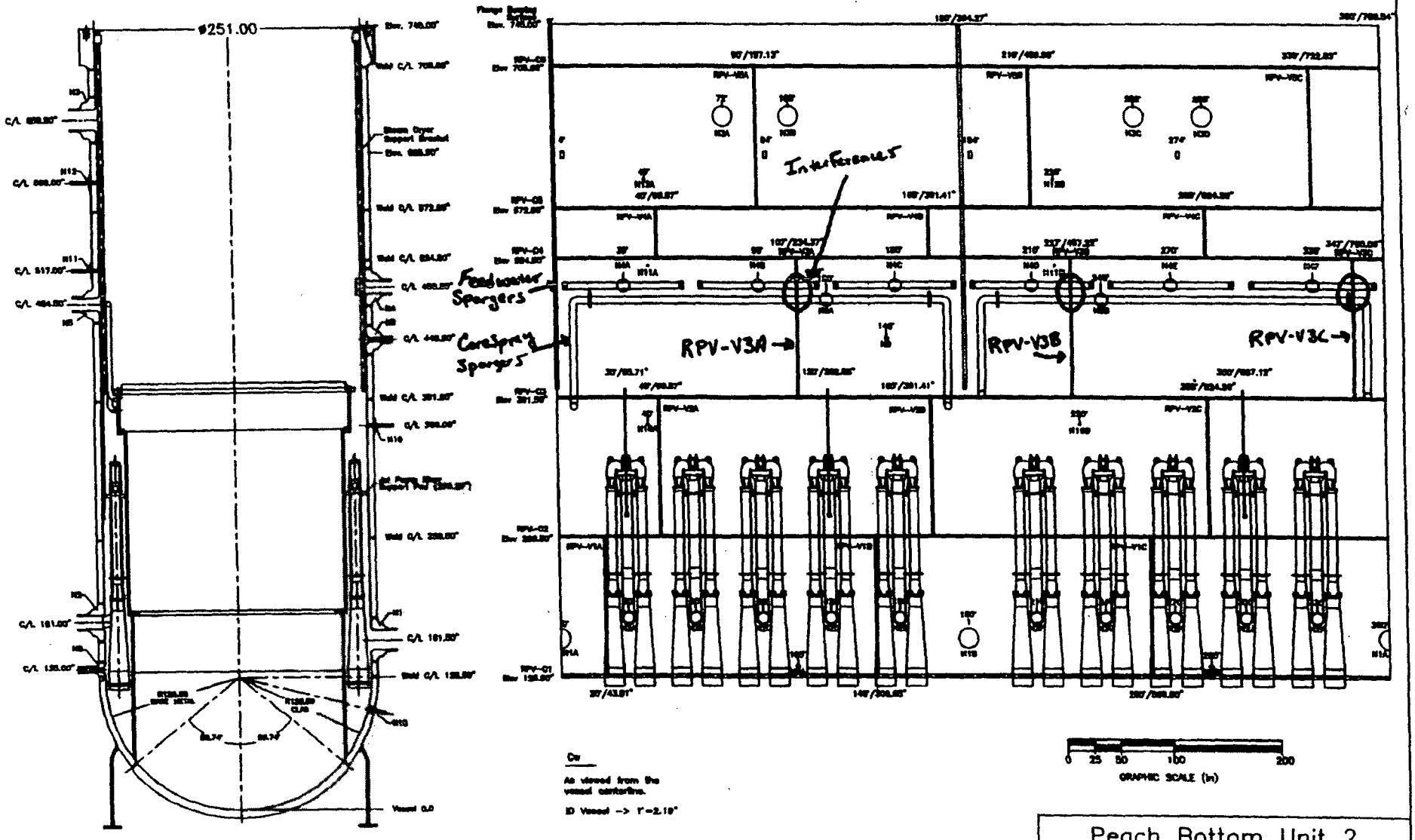

Peach Bottom Unit 2
ID Vessel Rollout
May 2004
RPVID

Enclosure 4

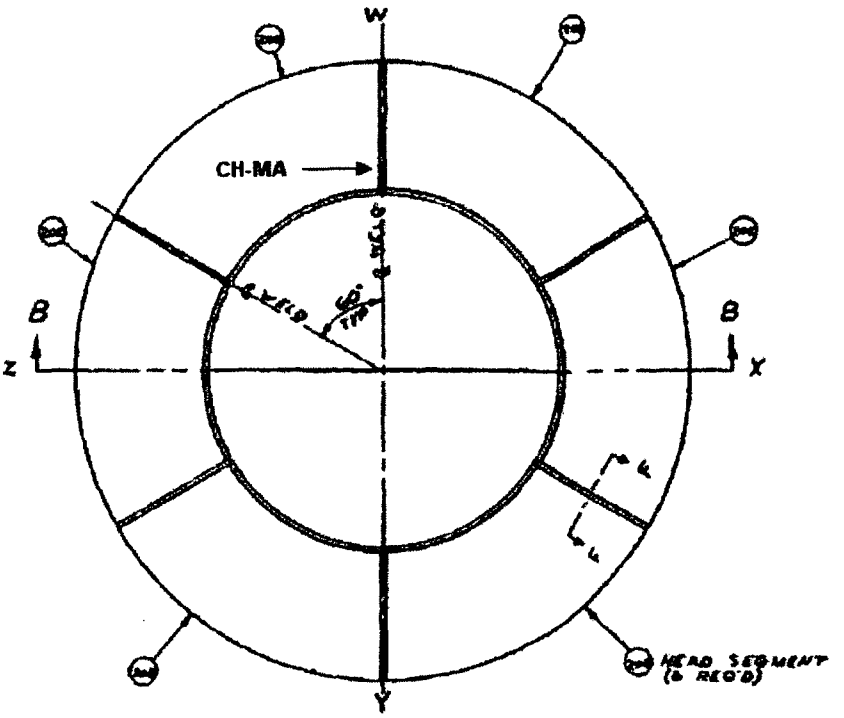
W
CH-MA
B
B
Z
X
Y
HEAD SEGMENT
(6 REQ'D)

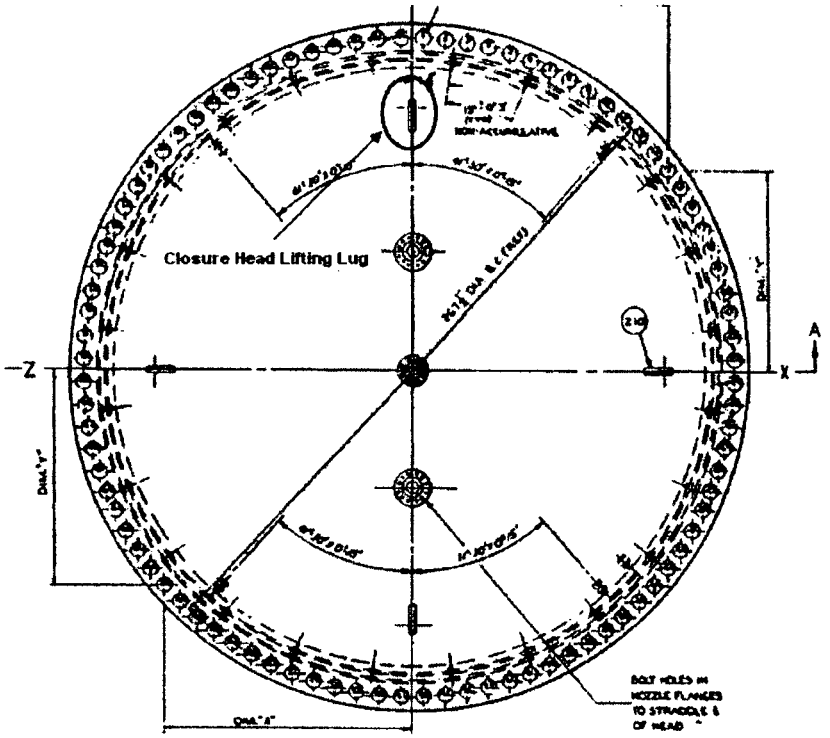
Closure Head Lifting Lug
-Z
X
A

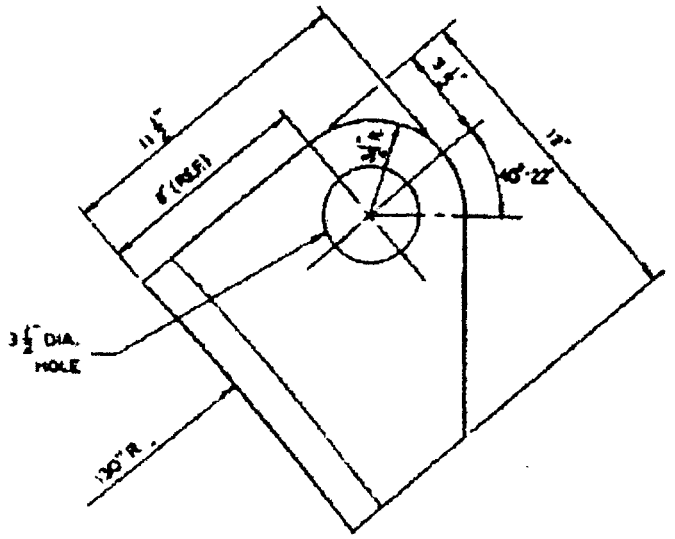
3 1/2" DIA. HOLE
30" R.

Enclosure 5

Peach Bottom Unit 2 – 2002 RPV Examination Coverage

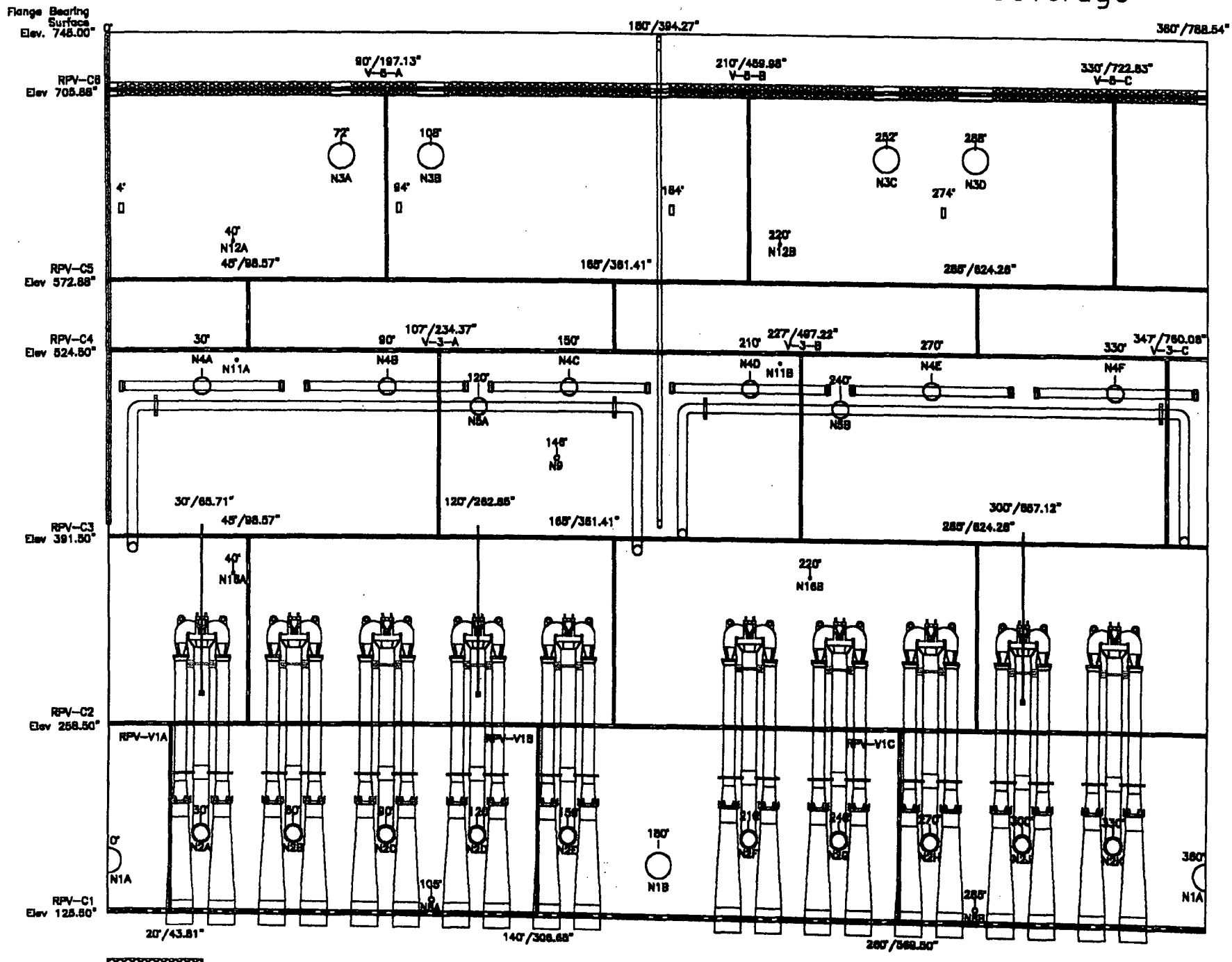

Area Examined

NOTE: Drawing is not to scale. For Information Only

Enclosure 6

Examination Location & Coverage Map for Weld No. RW2

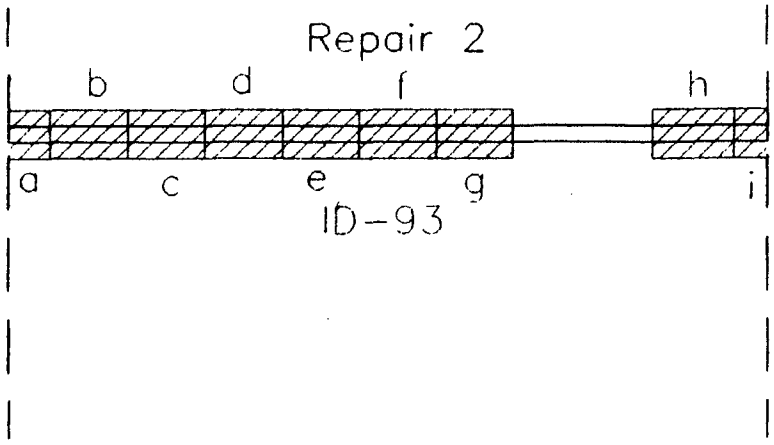

Transverse Exams

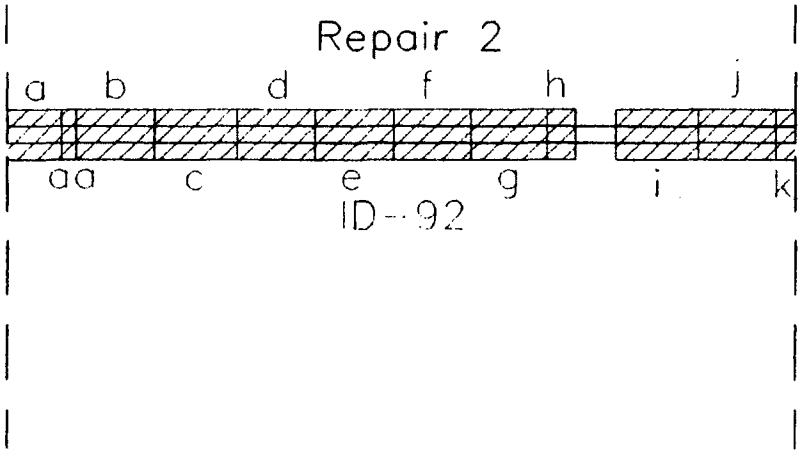

Parallel Exams

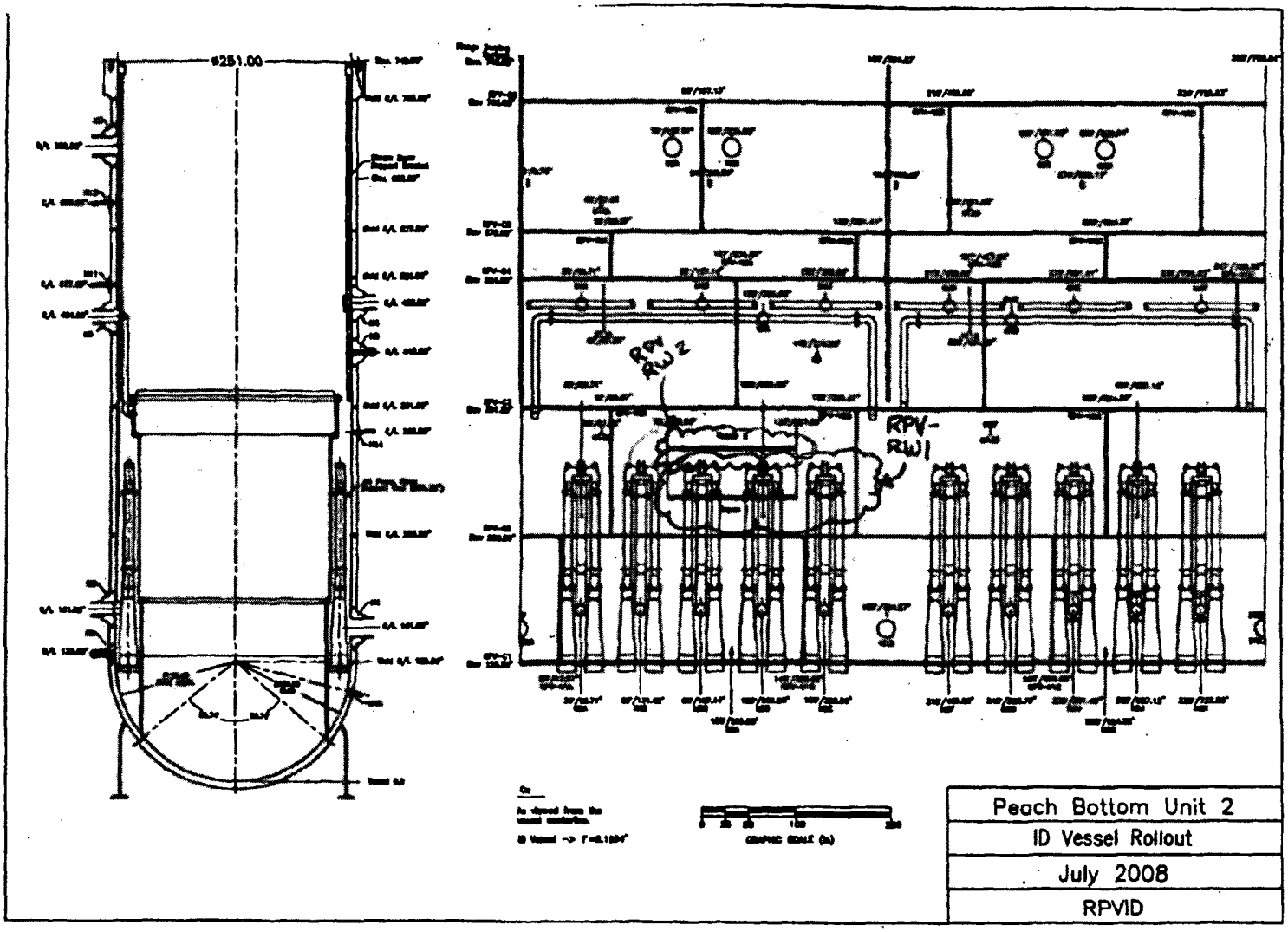
Peach Bottom Unit 2
ID Vessel Rollout
July 2008
RPVID

Enclosure 7

Figure 1 - Nozzle Inner Radius, Bore and Nozzle to Vessel

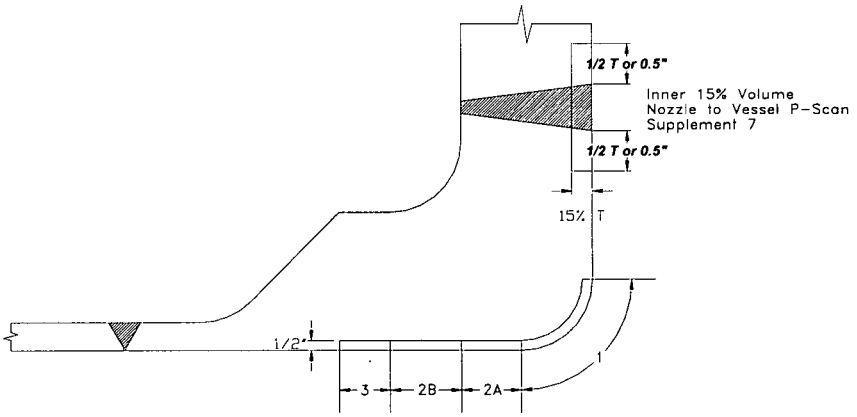

- ASME Code Volume: Zones 1 and 2A
- BWROG Examination Volume: Zones 1, 2A, 2B and 3
- Inner 15% of the IWB-2500-7 nozzle to vessel volume or as modified by Code Case

Figure 2 - Zone 1 and Inner 15% T Nozzle to Vessel Examinations

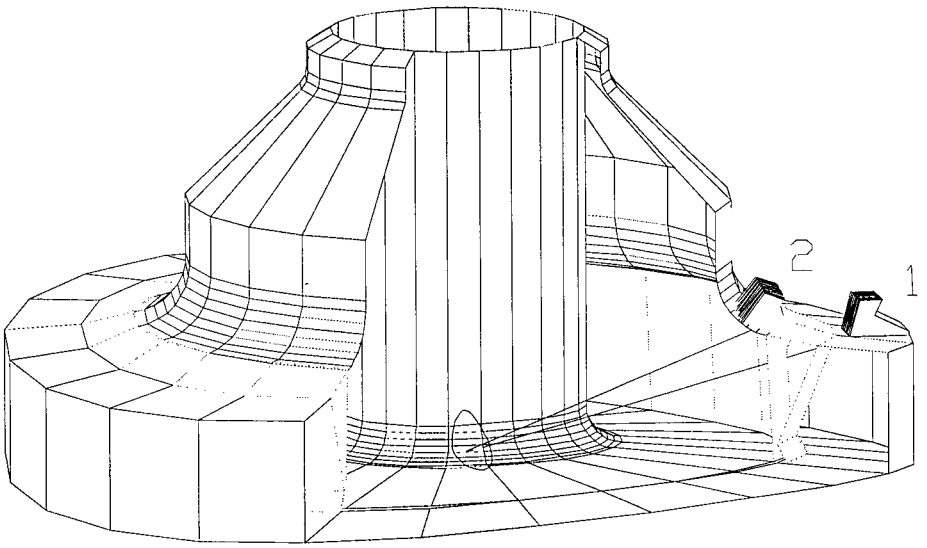

Figure 3 - Zone 2 Examination

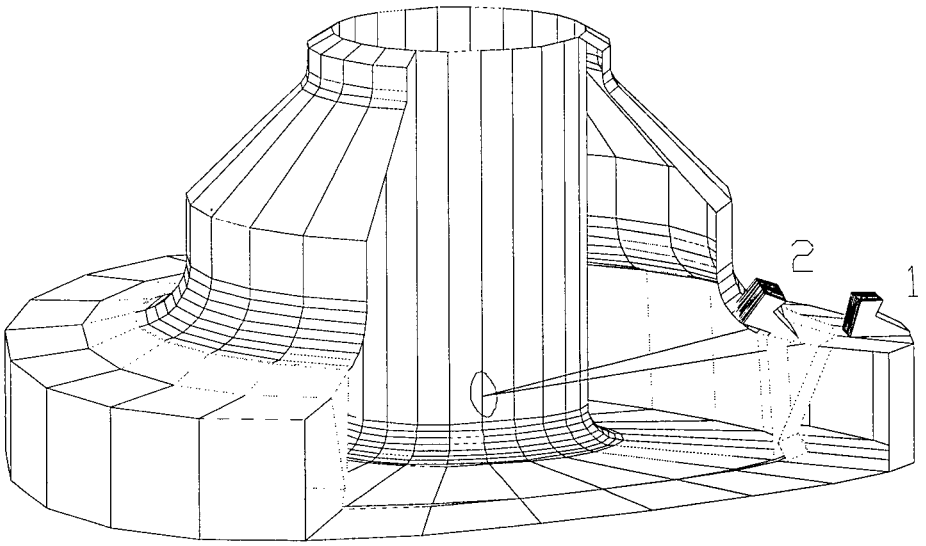

Figure 4 - Zone 3 Examination

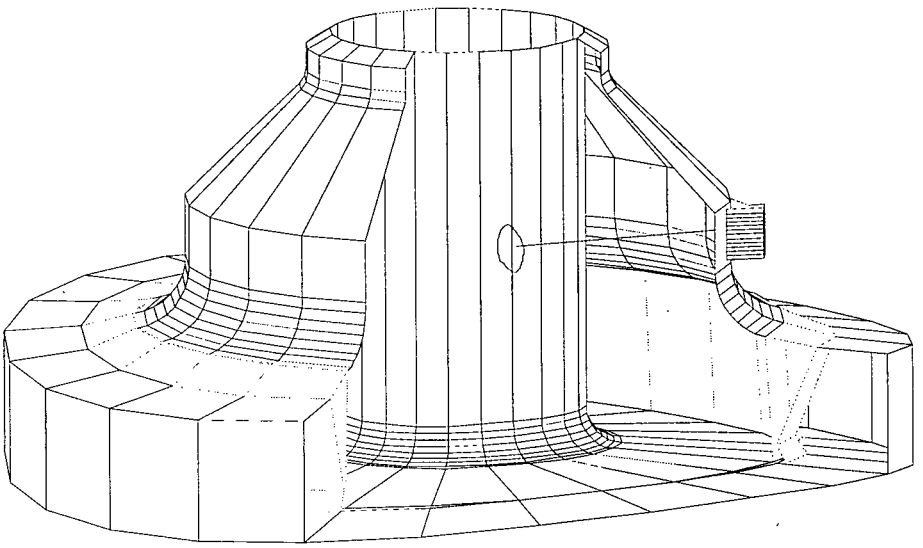

Enclosure 8

6280-M-1-339

ROUTE 21053

DISTRIBUTION — SEP 18 1974

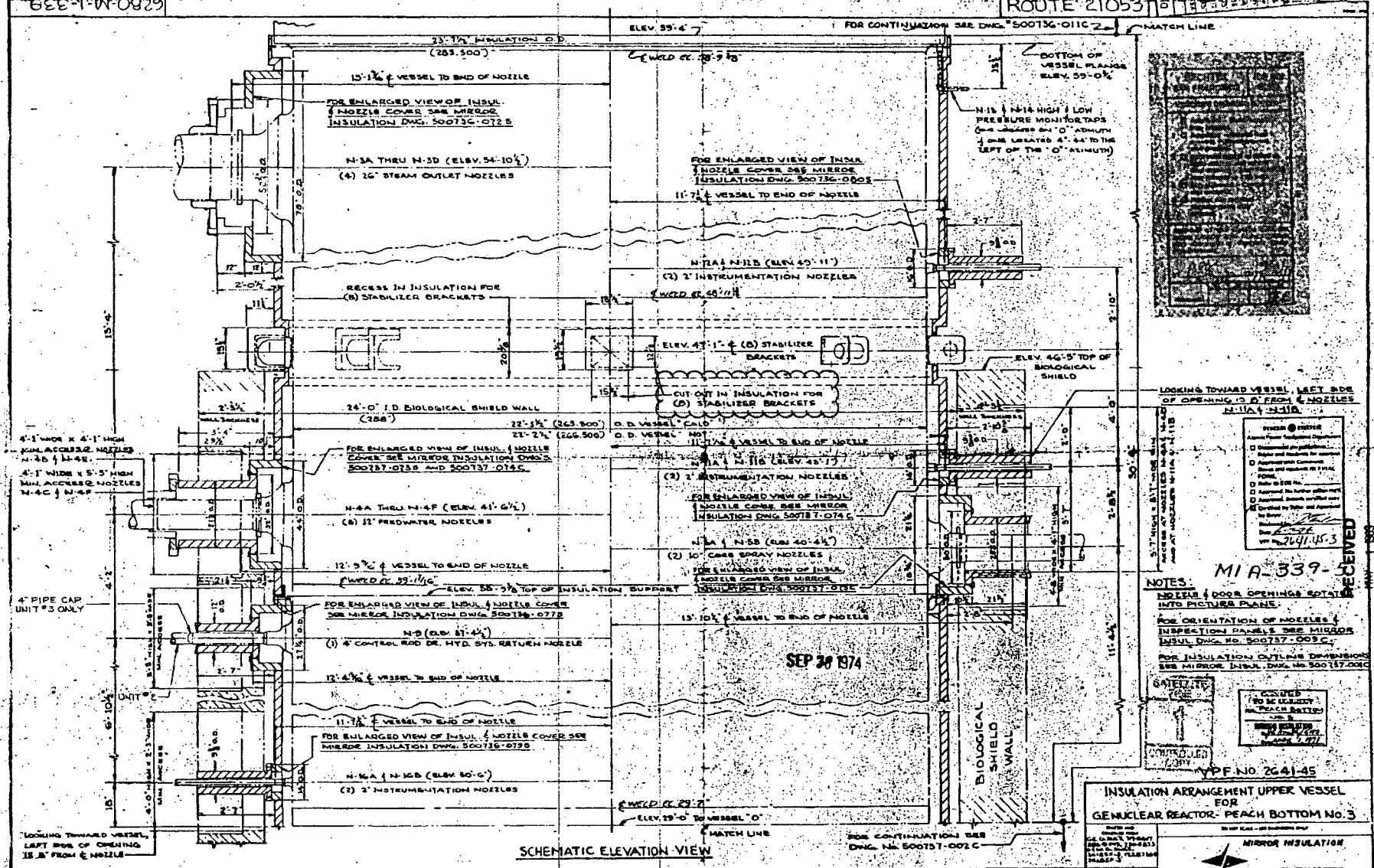

Enclosure 9

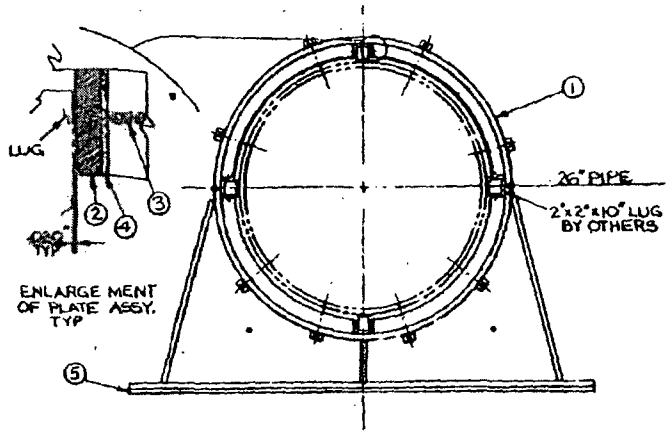

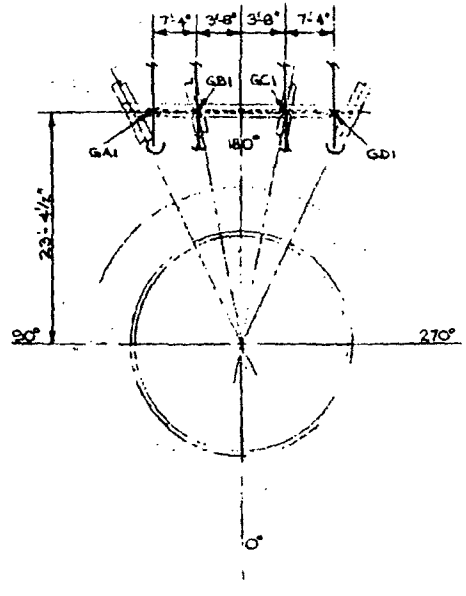

LOCATION PLAN.

ROUTE 21060

ITEM No.	MATERIALS AND OPERATION	QUAL
	PIPE SUPPORTS CONSISTING OF:	FOU
1	Type 4 Pipe Restraint as detailed	4
2	1/2"x2"x10" Lubrite Plates	32
3	1/4"-20 UNC X 1" Lg. 80° Flat Head Screws	96
4	2"x10" Shim	32
5	1"x12" C.S. Shim	4
	Apply coat of CARBOZINC 11 to above mat'l except th'ds which shall be greased.	

REF. DWG.
M-2191 SH. 9
M-2192

SUPPORT DETAILS
M2191-3-GA1 , M2191-3-GB1
M2191-3-GC1 , M2191-3-GD1

0 1 2

USE LATEST REVISION

NO.	DATE	DESCRIPTION	CHKD	APPD
6		W.O. 107781-3810 MOD. 559 ISSUE AS BUILT PER FIELD INSP.	KJG	

MECHANICAL

SUPPORT DETAILS
FOR MAIN STEAM
PEACH BOTTOM A.P.S. UNIT # 3

PHILADELPHIA ELECTRIC CO.

DRAWN	CHECKED	INSPECTED	DATE
NJB	KJG	JW	6-25-85

APPRD. [signature]
APPRD.

6280 | M-2191 | REV. 0

SHEET 8 OF

Enclosure 10

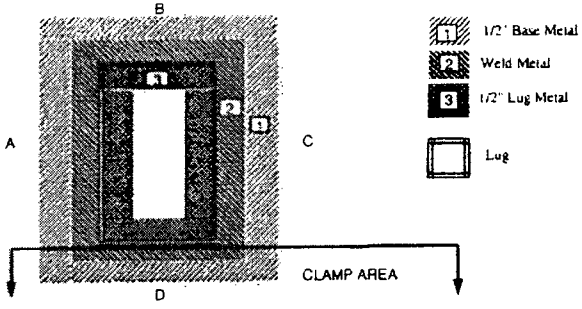

Summary No. 232100

Component: 10GB-H78 IA

Limited Exam due to Hanger Clamp

Lugs welded on 3 sides only

TOTAL REQUIRED EXAMINATION AREA

	LENGTH		WIDTH		
A1	3.5	x	0.5	=	1.75
A2	2.5	x	1	=	2.5
A3	2	x	0.5	=	1
			TOTAL		5.25
B1	3.5	x	0.5	=	1.75
B2	2.5	x	1	=	2.5
B3	2	x	0.5	=	1
			TOTAL		5.25
C1	3.5	x	0.5	=	1.75
C2	2.5	x	1	=	2.5
C3	2	x	0.5	=	1
			TOTAL		5.25
D1	0	x	0	=	0
D2	0	x	0	=	0
D3	0	x	0	=	0
			TOTAL		0

TOTAL AREA = A+B+C+D x4 LUGS

TOTAL AREA = 63

TOTAL AREA EXAMINED

	LENGTH		WIDTH		
A1	3	x	0.5	=	1.5
A2	2	x	1	=	2
A3	2	x	0.5	=	1
			TOTAL		4.5
B1	3.5	x	0.5	=	1.75
B2	2.5	x	1	=	2.5
B3	2	x	0.5	=	1
			TOTAL		5.25
C1	3	x	0.5	=	1.5
C2	2	x	1	=	2
C3	2	x	0.5	=	1
			TOTAL		4.5
D1	0	x	0	=	0
D2	0	x	0	=	0
D3	0	x	0	=	0
			TOTAL		0

TOTAL AREA = A+B+C+D x 4 LUGS

TOTAL AREA = 57

TOTAL CODE COVERAGE = 90.48%

RECALCULATION OF REPORT
DATED 9/24/2005

Wade A. Miller
GE HITACHI LEVEL III
3/8/2010

Enclosure 11

Figure 1

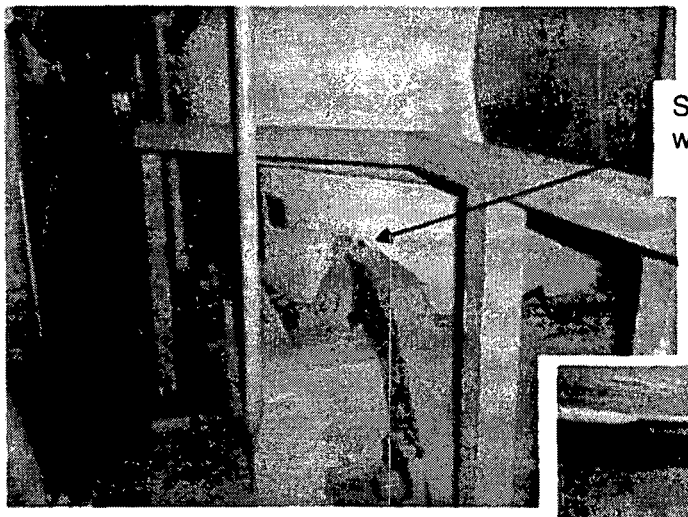

Segment 1 – the only accessible weld, with insulation installed.

Figure 2

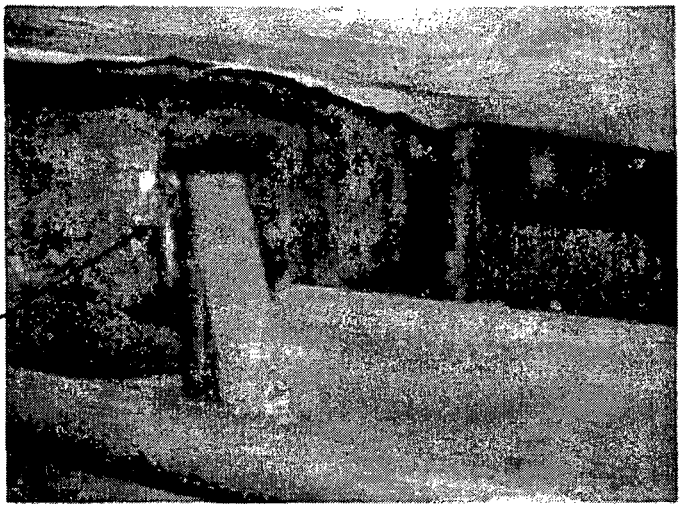

Segment 1 after insulation has been removed during PB2R17.

Figure 3

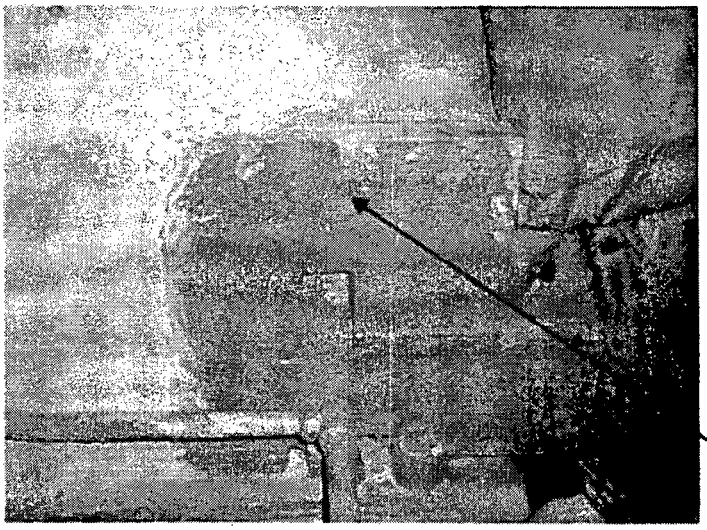

Figure 4

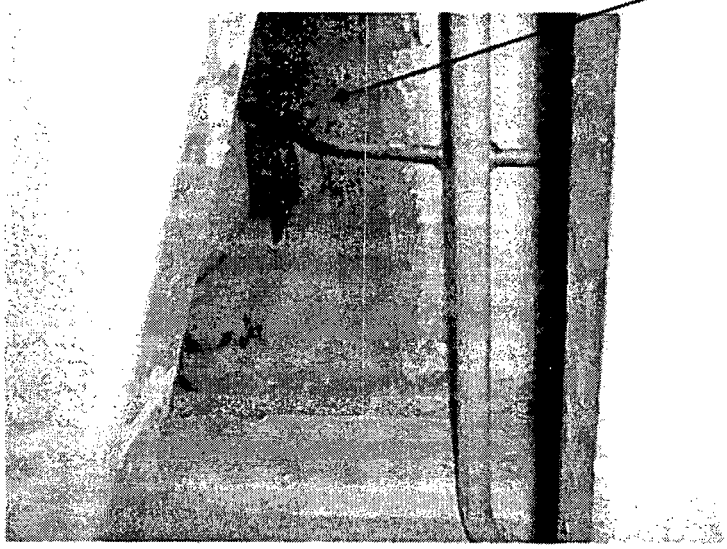

Segments 2 and 3, with the inaccessible welds concealed by large plate material.

Enclosure 12

Relief Request I3R-50

1. ASME CODE COMPONENTS AFFECTED:

Code Class:	1
Reference:	Table IWB-2500-1
Examination Categories:	B-A
Item Numbers:	B1.30
Description:	Relief to Utilize Performance Demonstration Initiative (PDI) Techniques for Class 1 Shell-to-Flange Welds
Component Numbers:	Reactor Vessel Flange Weld RPV-C6

2. APPLICABLE CODE EDITION AND ADDENDA:

The third interval Inservice Inspection (ISI) program for Peach Bottom Atomic Power Station, Units 2 and 3 was based on the American Society of Mechanical Engineers (ASME) Boiler and Pressure Vessel (B&PV) Code, Section XI, 1989 Edition, no Addenda.

3. APPLICABLE CODE REQUIREMENTS:

ASME Section XI, 1989 Edition, Examination Category B-A, Item B1.30 requires examination of the specified weld volume along essentially 100% of the reactor vessel weld length. Peach Bottom Atomic Power Station (PBAPS), Units 2 and 3 adopted ASME Code Case N-460 ("Alternative Examination Coverage for Class 1 and Class 2 Welds, Section XI, Division 1"), which defines "essentially 100%" as greater than 90% coverage of the examination volume or surface area, as applicable.

ASME Section XI, 1989 Edition, IWA-2232 requires that ultrasonic (UT) examinations be conducted in accordance with Appendix I. Appendix I, I-2100 requires that ultrasonic examination of reactor vessel flange welds greater than 2-inch thickness shall be conducted in accordance with Article 4 of Section V, as supplemented by this Appendix. Supplements identified in Table I-2000-1 shall be applied.

Exelon Generation Company, LLC (Exelon) proposes an alternative to ASME Section XI, 1989 Edition, IWA-2232, which requires that ultrasonic (UT) examinations be conducted in accordance with Appendix I.

4. REASON FOR REQUEST:

ASME Section V, Article 4, applies a prescriptive-based process for procedures and performing examinations. The prescriptive-based process has been replaced by performance-based methods implemented by ASME Section XI, 1995 Edition, 1996

Addenda, Appendix VIII, Supplements 4 and 6. 10 CFR 50.55a requires performance-based methods for examination of reactor pressure vessel shell welds.

As amended by the September 1999 revision of 10 CFR 50.55a, the U.S. Nuclear Regulatory Commission amended its regulations to implement ultrasonic examination techniques qualified by demonstration for Appendix VIII, Supplements 4 and 6, of the 1995 Edition, 1996 Addenda, of ASME Section XI by the Performance Demonstration Initiative (PDI), which would apply to the third interval.

Industry experience has demonstrated that for detection and characterization of flaws in the reactor pressure vessel, the PDI qualified UT examination techniques equal or surpass the requirements of the ASME Code, Section V, Article 4, as supplemented by ASME Section XI, Appendix I.

5. PROPOSED ALTERNATIVE AND BASIS FOR USE:

As a proposed alternative in accordance with 10 CFR 50.55a(a)(3)(i), the reactor vessel shell-to-flange weld will be accepted utilizing the performance-based methods of ASME Section XI 1995 Edition, 1996 Addenda, Appendix VIII, Supplements 4 and 6, as modified by 10 CFR 50.55a, and as implemented by the PDI.

These requirements of Appendix VIII are performance-based, and the resulting qualified procedures and personnel are more accurate, reliable, and repeatable than the techniques previously used. The use of these qualified techniques further assures that the reactor vessel flange weld is free of service related flaws thus enhancing quality and ensuring plant safety and reliability. The PDI method has demonstrated that, for detection and characterization of flaws in the reactor pressure vessel, PDI-qualified UT examination techniques equal or surpass those of ASME Code Section V, Article 4. Therefore, use of the proposed alternative will provide an acceptable level of quality and safety.

ASME Section XI, 1989 Edition, Appendix I, paragraph I-2100 requires that ASME Section V, Article 4 techniques be used for the reactor pressure vessel shell-to-flange weld. ASME Section V, Article 4 describes the required techniques to be used for UT examination of the reactor vessel flange welds in pressure vessels with wall thicknesses greater than 2 inches. The ASME Section V, Article 4 UT technique calibrations, recording criteria and flaw sizing capabilities are based upon the use of a distance-amplitude-correction curve (DAC) derived from machined reflectors in a basic calibration block. UT performed in accordance with Section V, Article 4, uses recording thresholds known as percent of DAC for recording and reporting of indications within the examination volume. Indications detected in the examination volume with amplitudes below these thresholds, do not require recording and/or evaluation. The recording thresholds in Section V, Article 4 are generic and do not take into consideration such factors as flaw orientation, which can influence the amplitude of UT responses.

Procedures, equipment and personnel qualified via the PDI program have been demonstrated to have a high probability of detection and are generally considered superior to the techniques employed during earlier Section V, Article 4 reactor pressure vessel weld examinations. Use of the detection criterion is more conservative and the procedure requires the examiner to evaluate all indications determined to be flaws regardless of their amplitude.

EPRI Report NP-6273, "Accuracy of Ultrasonic Flaw Sizing Techniques for Reactor Pressure Vessels," dated March 1989, contains a comparative analysis of sizing accuracy for several different techniques. The results show that UT flaw sizing techniques based on tip diffraction are the most accurate. The proposed alternative PDI UT qualified detection and sizing methodologies use analysis tools based upon echo dynamics and tip diffraction. This methodology is considered more sensitive and accurate than the amplitude-based Section V, Article 4 processes.

7. DURATION OF PROPOSED ALTERNATIVE:

This relief request is requested for the third ten-year ISI interval for Peach Bottom Atomic Power Station, Units 2 and 3, which ended on November 4, 2008.

8. PRECEDENT:

A similar relief request was approved for:

- Seabrook Station Unit 1 (April 7, 2009) (ML090690557)

- Donald C. Cook Nuclear Plant (May 22, 2009) (ML083570013)