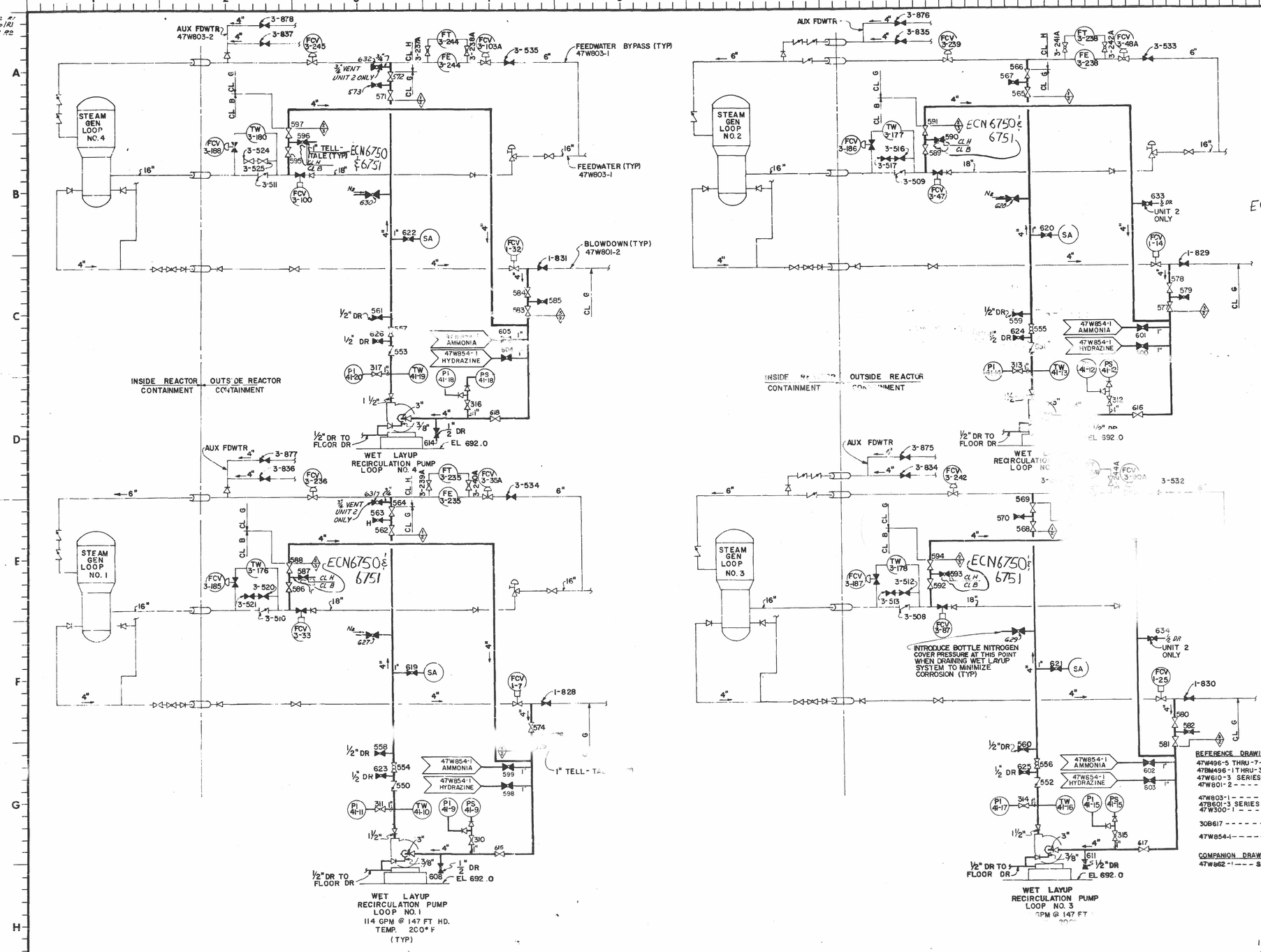

NOTES:

1. PRIOR TO UTILIZING THE SGWL SYSTEM, THE INTERNAL CONDITION OF THE FEEDWATER & STEAM GENERATOR BLOWDOWN SYSTEMS SHALL BE LESS THAN 200 °F & 100 PSIG.
2. THE DESIGN PRESSURE & TEMPERATURE FOR THE STEAM GENERATOR WET LAYUP SYSTEM IS 150 PSI AND 200°F EXCEPT AS DENOTED. (SEE NOTE 3)
3. ◁1▷ INDICATES DESIGN CONDITIONS CHANGE

	1	2	3
PRESSURE (PSIA) →	1185	150	1185
TEMPERATURE (°F) →	465	200	600
HYDROSTATIC TEST PRESSURE (PSIA) →	1481A / 1778B	225	1778B / 1481A

(A) CLASS B PIPING PER ASME SECTION III CODE
(B) CLASS G&H PIPING PER ANSI B31.1 CODE

4. EACH RECIRCULATION LOOP'S PIPING IS TVA CLASS B,G OR H PER CONST. SPEC. N3G-881 AND IS TYPICALLY DENOTED CL B + CL G. ECN6750 & 6751
5. THE RECIRCULATION LOOP NUMBER CORRESPONDS TO THE RESPECTIVE STEAM GENERATOR NUMBER.
6. UNIT 1 INSTRUMENT AND VALVE NUMBERS ARE PREFIXED "1". UNIT 2 INSTRUMENT AND VALVE NUMBERS ARE PREFIXED "2". INSTRUMENT AND VALVES HAVING NUMBERS WITH "0" PREFIX ARE COMMON TO BOTH UNITS.
7. ALL WET LAYUP SYSTEM AND RECIRCULATION LOOP SYSTEM VALVES WILL BE PREFIXED WITH UNIT NO. 1-41- VALVE NO. OR 2-41- VALVE NO.
8. FLOW ARROWS DENOTE FLOW DIRECTION DURING OPERATION OF THE SGWL RECIRCULATION SUB-SYSTEM.
9. ALL INSTRUMENT CONNECTIONS ARE 1" UNLESS OTHERWISE NOTED.
10. ALL TVA CLASS G PIPING SHALL BE STRUCTURALLY SUPPORTED IN ACCORDANCE WITH THE REQUIREMENTS OF SEISMIC QUALIFICATION CLASS I (L) TO WITHSTAND ALL DESIGN BASIS EVENTS WITHOUT DAMAGING SAFETY RELATED EQUIPMENT.
11. THE MODES OF THIS SYSTEM'S OPERATION ARE DEFINED IN THE SYSTEM DESCRIPTION FOR THE LAYUP WATER TREATMENT N3-41-4002.

REFERENCE DRAWINGS

47W496-5 THRU -7 -- PIPING DRAWINGS, SGWLS
47BM496-1 THRU-3 -- PIPING BILLS OF MATERIAL
47W610-3 SERIES -- CONTROL DIAGRAM
47W801-2 ------ FLOW DIAGRAM- STEAM GENERATOR BLOWDOWN SYS
47W803-1 ------ FLOW DIAGRAM FEEDWATER
47B601-3 SERIES -- INSTRUMENT TABULATION
47W300-1 ------ FLOW DIAGRAM-- PRINCIPAL PIPING SYSTEM
30B617 ------ INSTRUMENTATION SYMBOLS AND IDENTIFICATION
47W854-1 ------ FEED WATER TREATMENT SECONDARY CHEMICAL FEED

COMPANION DRAWINGS

47W662-1 --- SGWLS TREATMENT TRANSFER & STORAGE SYSTEMS

FSAR FIG 10.4-37

REV NO	ECN NO	DATE	DSGN	DRWN	CHKD	SUPV	ENGR	INSP	SUBM	APPD
5	EXCEPTION "A" ECN6750 & 6751 REVISED CLASS BREAK LOCATION AND NOTE PER ECN6750 & 6751, ADDED "0" TO TITLE BLOCK PER EXCEPTION "A"	10-25-88	AGH	FK						
4	EXCP "A" REV NOTE #3 PER FCR M-40,122 & ADDED DRAIN VALVES 2-41-633 LOOP 2 & 2-41-636 LOOP 3 PER FCR M-40110 & REV HYDRO & PIPE CLASS PER FCR M-40,125	12-9-86	JDM		PWB					
3	EXCEP "A" ADDED VENTS TO LOOP 1 & 4 UNIT 2 ONLY PER FCR M-11,206	5-1-84								
2	S1, 3375 REV PER FCR SN060 & M-30316	7-7-83								
1	3375 ADD SAMPLING & DRAIN CONNS & REV CHEMICAL CONNS, ADD NOTE 11	11-7-83								

DSGN Joseph B. Rotch
DRWN William C. Rodgers
CHKD Bailey M. Bowden
SUPV J.T. Boots
INSP
ENGINEER J.J. Rotch

SCALE NONE — EXCEPT AS NOTED

POWERHOUSE
UNITS 1 & 2

FLOW DIAGRAM EXCEPTION "A"
STEAM GENERATOR WET LAYUP SYS, CLOSED RECIRCULATION-LOOP SYSTEM

WATTS BAR NUCLEAR PLANT
TENNESSEE VALLEY AUTHORITY
DIVISION OF ENGINEERING DESIGN

Q

INITIAL ISSUE — SUBMITTED J.J. Rotch — RECOMMENDED J.C. Kapp — APPROVED

INSPECTED AND APPROVED FOR ISSUE

KNOXVILLE 11-22-82 85 M 47W862-2 R5

RECORD DRAWING AS CONSTRUCTED

D-29