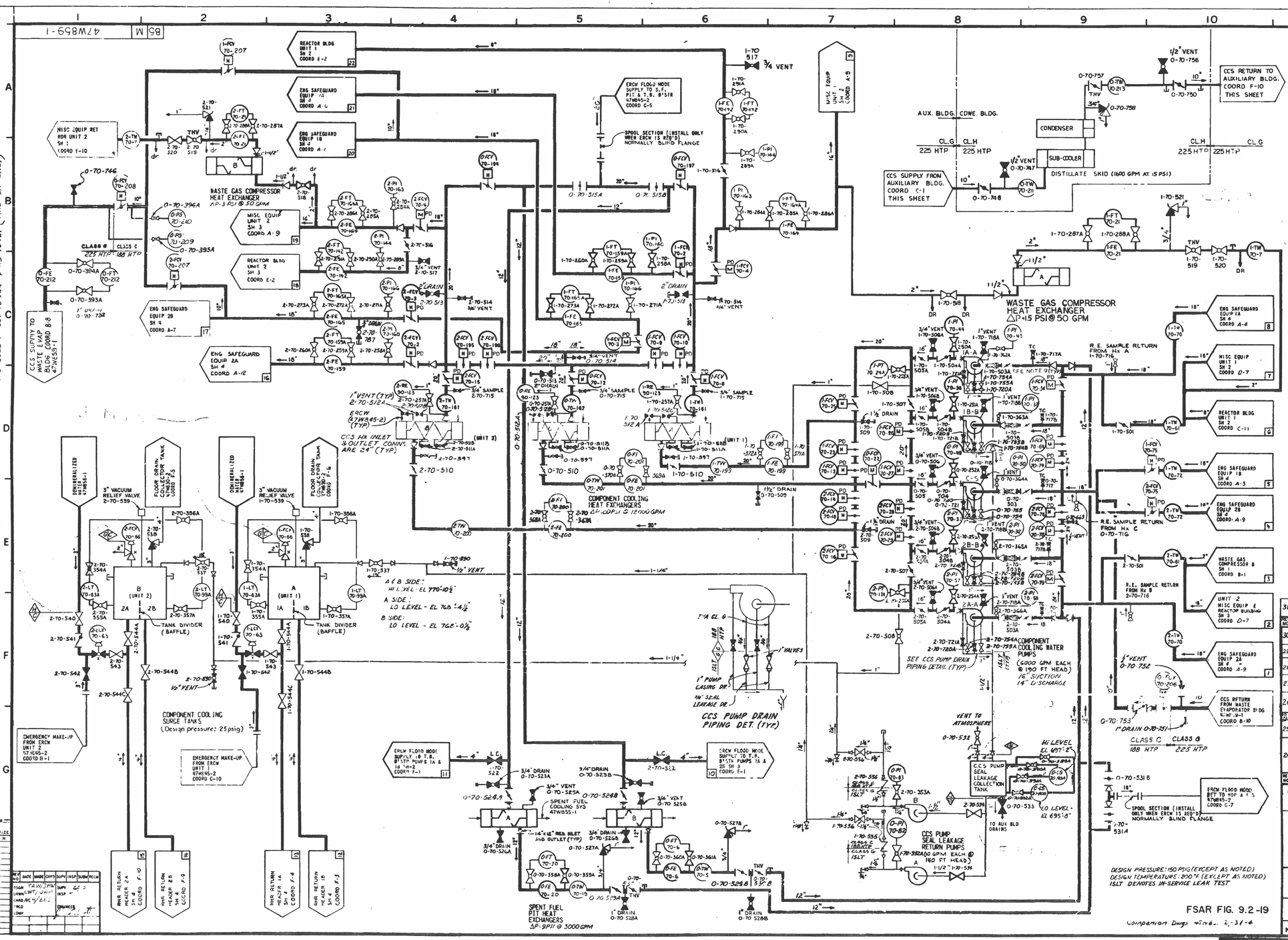

NOTES:

1. ALL VALVES ARE SAME SIZE AS PIPE UNLESS OTHERWISE NOTED.
2. EXPLANATION OF VALVE AND INSTRUMENT NUMBERS
   INSTRUMENT NO. - PCV - 70 - 100 (UNIT) (TYPE) (SYSTEM) (INSTRUMENT NO.)
   VALVE NO. - 1 (UNIT) TO (SYSTEM) - 100 (VALVE NO.)
3. ALL VALVE AND INSTRUMENT NUMBERS ON A UNIT BASIS ARE PREFIXED WITH THE UNIT NUMBER, I.E. (1-) FOR UNIT 1 AND (2-) FOR UNIT 2. INSTRUMENTS AND VALVES COMMON TO BOTH UNITS PREFIXED WITH (0-).
4. MAIN PROCESS SYSTEM VALVES ARE SHOWN IN THEIR NORMAL OPERATING POSITION.
5. ALL INSTRUMENT CONNECTIONS ARE 1/2" UNLESS OTHERWISE NOTED.
6. ALL PIPING AND VALVES FOR CONTAINMENT ISOLATION ARE TVA CLASS B, THE REMAINDER OF SYSTEM PIPING AND VALVES ARE TVA CLASS C, G, H AND CLASS NOTED. INSTRUMENT TAKEOFFS THRU THE FIRST VALVE ARE THE SAME TVA CLASS AS THE PROCESS PIPING.
7. ALL VALVE NUMBERS UNDERLINED ARE TO BE PREFIXED WITH 1-70 AND SHEET 3 WITH 2-70 UNLESS OTHERWISE SPECIFIED.
8. VALVES WITH AN "FBV" ARE USED TO BALANCE SYSTEM FLOWS TO THE EQUIPMENT SERVICED.
9. STRAINERS ARE TO BE INSTALLED FOR USE DURING SYSTEM CLEAN UP AND REMOVED BEFORE NORMAL OPERATION BEGINS.
10. THE COMPONENT COOLING SYSTEM DESIGN PRESSURE IS 150 PSIG AND THE DESIGN TEMPERATURE IS 200° F.
11. HTP-INDICATES THE HYDROSTATIC TEST PRESSURE-(PSIG) CONST SHALL DETERMINE IF THE COMPONENTS IN THE SYSTEM ARE LIMITING COMPONENTS TO THE HYDROSTATIC TEST ASME CODE CASES INVOLVING HYDROSTATIC TESTING MAY BE USED IF EN DES APPROVES THEIR APPLICATION.
12. ALL CLASS G PIPING IS SEISMICALLY SUPPORTED. HOWEVER THE HYDROSTATIC TEST IS NOT WITHIN THE QA PROGRAM. ALL CLASS H PIPING IN THE CCWE BUILDING IS SUPPORTED WITH 47A059 TYPICALS AND THE PRESSURE BOUNDARY IS NOT WITHIN THE QA PROGRAM. ALL PIPING DOWNSTREAM OF TEST RELIEF, VENT, OR DRAIN VALVES WHICH OPEN TO ATMOSPHERE IS TVA PIPING CLASS G UNLESS OTHERWISE NOTED, AND IS NOT WITHIN THE PRESSURE BOUNDARY QA PROGRAM.
13. VALVES ARE TO REMAIN LOCKED CLOSED EXCEPT DURING SAMPLING OPERATIONS.
14. FOR CLASS C* DEFINITION, SEE CLASS : NOTE 4 ON 47B21-1
15. FLOW CONTROL VALVES (FCV) MARKED WITH "PD" ARE ADMINISTRATIVELY LOCKED IN THE OPEN/CLOSED POSITION (SHOWN ON FLOW DIAGRAM) AT MOTOR CONTROL CENTER DUE TO APPENDIX R INTERACTION. BREAKERS ARE SET IN THE TRIP POSITION TO PREVENT UNAUTHORIZED OPERATION.
16. FOR DEFINITION OF SYMBOLS OF "L.C." OR "L.O.", REFER TO MEMO B26 8504-02001.

LEGEND

- 1/2" TEST CONNECTION
- 1/2" TEST VENT
- NDICATES MATCH NUMBER
- 1/2" NPT PLUG IP CAP TYPE DRAIN
- (FCV 70-75) M PD--SEE NOTE 15

REFERENCE DRAWING

47W864-SERIES	COMPONENT COOLING SYSTEM PIPING
47B21	PIPING SYSTEMS CLASSIFICATION
WB-DC-40-15	COMPONENT COOLING SYSTEM DESIGN CRITERIA
47W800-1	GENERAL PLANT SYSTEM FLOW DIAGRAM
47W610-70-1,2 & 3	COMPONENT COOLING SYSTEM CONTROL DIAGRAM
47W611-70-1,2 & 3	COMPONENT COOLING SYSTEM LOGIC DIAGRAM
47B601 70 SERIES	SERIES INSTRUMENT TABULATION
30B617 SERIES	SERIES INSTRUMENTATION SYMBOLS AND IDENTIFICATION

REV NO	CHANGE REF	DATE	DFTR	CHKR	DSGN	RVWR	APPD	APPD	ISSD
31	ECN 6750, 6751	9-1-87	GMA	PK					
	REVISE NOTE 12, ADDED CLASS BREAKS PER ECN 6750, 6751.								
30	6682	1-10-87	GG	GG					
	REMOVED PRESSURE RELIEF VLV PER ECN								
29	6591		GG	GG					
	REMOVED REF TO CONTINUATION DWGS PER ECN								
28	6591	9-25-86	JLG	JL					
	PRESS RELIEF VALVES DISCH LINES ROUTED TO FLR DRS, ADDED NOTE 17								
27	6284, 6285								
	RELOCATED INSTRUMENT TAPS FOR LT-63A AND LT-99A								
26	6114	7-23-86	MLS	MLS					
	ADDED 2-DRV-70-787 FOR FCR A-10581 PER ECN 6114.								
25	ECN/FCR	DATE	DRWN	DSGN	CHKD	RVWD	APPD	ISSD	
	5634, 5635	12-2-85							
	REV 'FBV' TO 'THV' PER ECNS								
24	5198, 5758	7-31-85							
	REMOVE TEMPORARY BOUNDARY IN SFP Hx A DISCHARGE PER FCR NP-857 ON ECN 5758; REVISED FLAG COORDINATES PER ECN 5198.								

REV NO	ECN NO.	DATE	DSGN	DRWN	CHKD	SUP	ENGR	INSP	SUBM	RECM	APPD	PE