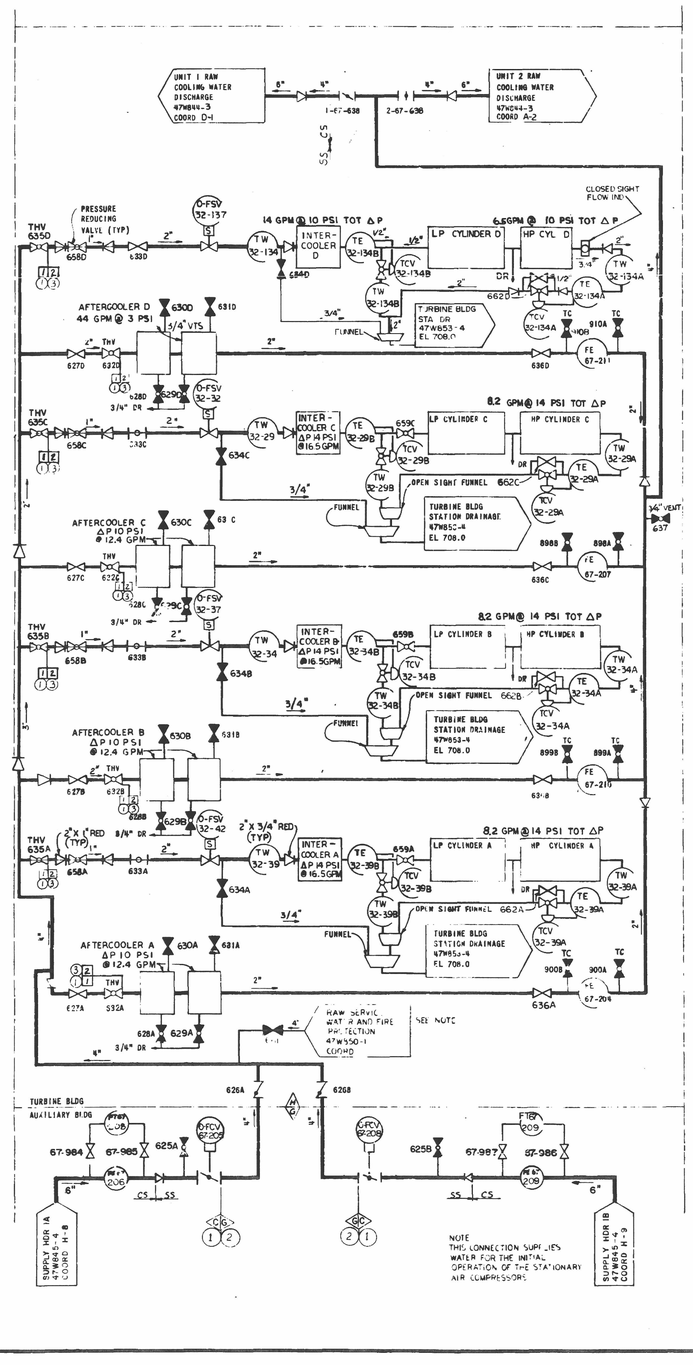

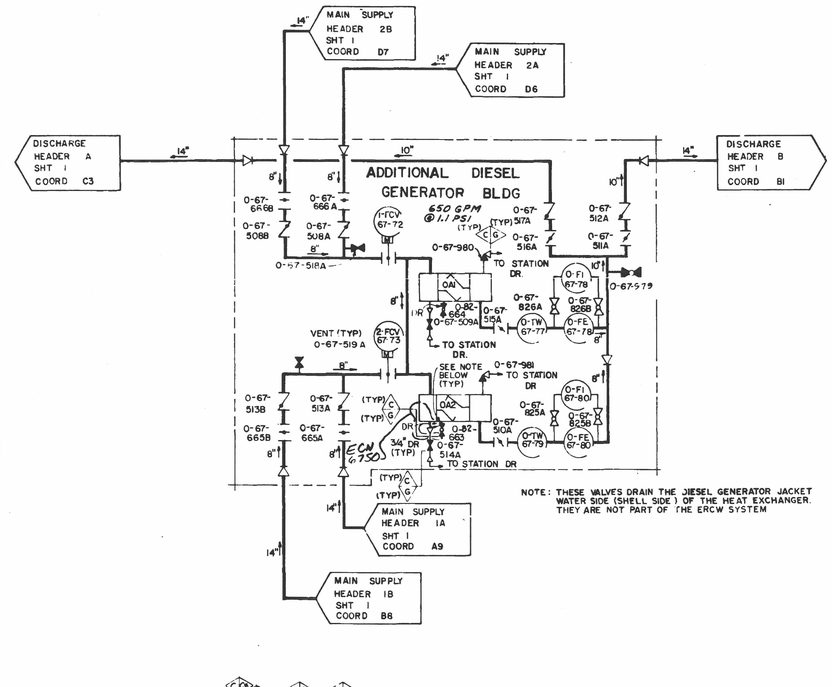

NOTE: THESE VALVES DRAIN THE DIESEL GENERATOR JACKET WATER SIDE (SHELL SIDE) OF THE HEAT EXCHANGER. THEY ARE NOT PART OF THE ERCW SYSTEM

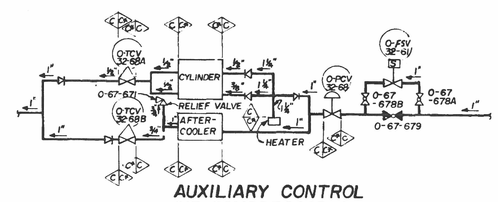

AUXILIARY CONTROL AIR COMPRESSOR A DETAIL A5
(SH 4, COOR A-7)

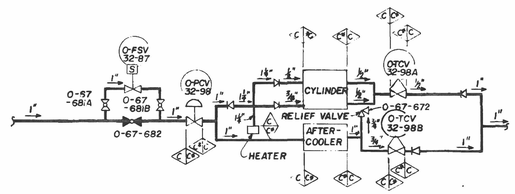

AUXILIARY CONTROL AIR COMPRESSOR B DETAIL B5
(SH 4, COOR B-4)

NOTES CONTINUED:

15. THE FAILURE POSITION FOR NON-MANUALLY OPERATED VALVES IS SHOWN AS BELOW:
    - O = OPENS WHEN IT FAILS
    - X = CLOSES WHEN IT FAILS
    - ◊ = STAYS AS IS WHEN IT FAILS
16. ALL CLASS G PIPING IS SEISMICALLY SUPPORTED TO MAINTAIN PRESSURE BOUNDARY AND THE HYDROSTATIC TEST IS WITHIN THE QA PROGRAM EXCEPT FOR PIPING ON THE DISCHARGE SIDE OF DRAIN & VENT VALVES AND RELIEF VALVES WHICH DISCHARGE TO THE ATMOSPHERE. SINCE THESE PIPES DISCHARGE TO ATMOSPHERIC PRESSURE, NO HYDROSTATIC TESTING OF THESE LINES IS NEEDED. (SEE NOTE 22)
17. THIS SYMBOL DENOTES THOSE VALVES WHICH HAVE A LOCKING DEVICE SO VALVES CAN BE LOCKED IN THEIR PROPER POSITION.
18. ALL INSTRUMENTATION SENSE LINES AND VALVES SHALL BE OF STAINLESS STEEL.
19. THE HVAC COOLERS LOCATED IN THE REACTOR BLDG ARE CATEGORY (L) WITHOUT PRESS BOUNDARY INTEGRITY PER WB-DC-40-31-13. IF A PRESSURE BOUNDARY VIOLATION OCCURS FOLLOWING AN SSE, THEY MAY BE ISOLATED FROM THE REMAINDER OF THE SYSTEM BY USING THE APPROPRIATE CONTAINMENT BOUNDARY ISOLATION VALVES. (DESIGNATED CLASS Y.)
20. THE REACTOR COOLANT PUMP MOTOR COOLERS ARE NOT SEISMICALLY QUALIFIED. IF A PRESSURE BOUNDARY VIOLATION OCCURS FOLLOWING AN SSE, THEY MAY BE ISOLATED FROM THE REMAINDER OF THE SYSTEM BY USING THE APPROPRIATE CONTAINMENT BOUNDARY ISOLATION VALVES. (THE COOLERS ARE DESIGNATED CLASS Y.)
21. FLOW DIRECTION FOR NORMALLY CLOSED VENT, DRAIN, RELIEF AND TEST VALVES SHALL BE OUTWARD FROM THE SYSTEM UNLESS OTHERWISE SPECIFIED. WHEN DISCHARGE IS TO ATMOSPHERE, PIPING DOWNSTREAM OF THESE VALVES SHALL BE CLASS G UNLESS OTHERWISE SPECIFIED
22. THE ERCW SCREEN WASH PUMPS 1A-A, 2A-A, 1B-B, 2B-B AND THE ASSOCIATED DISCHARGE PIPING ARE REQUIRED TO MAINTAIN PRESSURE BOUNDARY INTEGRITY (1(L)A). ANY MODIFICATIONS OR REPAIR TO THE SCREEN WASH PUMPS, PIPING, OR VALVES SHALL BE MADE TO THE REQUIREMENTS OF TVA CLASS C. THE PRELUBE PIPING TO THE SCREEN WASH PUMPS IS NOT REQUIRED TO MAINTAIN PRESSURE BOUNDARY INTEGRITY (1(L)B).
23. FLOW CONTROL VALVES (FCV) MARKED SEE NOTE 23 ARE ADMINISTRATIVELY LOCKED IN THE OPEN/CLOSED POSITION SHOWN ON FLOW DIAGRAM AT MOTOR CONTROL CENTER DUE TO APPENDIX R INTERACTION BREAKERS ARE SET IN THE TRIP POSITION TO PREVENT UNAUTHORIZED OPERATION
24. VALVES 1&2-FSV-67-170-B, FSV-67-168A, FSV-67-168B & FSV-67-190B (WHICH ARE ASSOCIATED WITH FCV'S OF SAME NUMBERS) HAVE BEEN ELECTRICALLY DISCONNECTED AT THE MOTOR CONTROL CENTER DUE TO APPENDIX R INTERACTION.

DCA P01542-01-1

REV NO	ECN NO	DATE	DSGN	DRWN	CHKD	SUPV	ENGR	INSP	SUBM	RECM	APPD
16	4769, 4825										
	DELETED SIGHTGLASS & STRAINERS FM DETAIL A5 & B5 PER ECN 4769. ADDED PER ECN 4769. ADDED NOTE 22 PER ECN 4825.										
15	4255, 4647										
	ADDED NOTE 21 PER FCR A-6719 PER ECN 4255, ADDED VALVE 0-67-378 (COOR B-7) PER FCR M-30,127 AND DETAIL A5 AND B5 PER FCR A-755 BOTH FCRS FOR ECN 4647										
14	4647										
	ADDED NOTE 20										
13	S1, 3811, 5362										
	CHANGED BALL VALVE TO GATE VALVE PER M-21207 & FCR 3811, ADDED NOTE 19 PER ECN 5362. ADDED SYMBOLS PER ECN 5362										
12	S1										
	ADDED SYMBOLS, CHANGED VLV MK NO'S 625 A & 625B.										
11											
	ADDED PIPING AND FITTINGS PER ECN 3366 & NOTES PER 3008, 2756										

REV NO	CHANGE REF	DATE	DFTR	CHKR	DSGN	RVWR	APPD 2	APPD 3	APPD	ISSD
23	P-01542-C	11-13-90	CET	BB						
	REVISED NOTE 22 PER DCA P01542-01-1.									
22	EXCEPTION "A" ECN 6750, 6751	9-1-99		PK						
	ADDED "Q" TO TITLE BLOCK PER EXCEPTION "A". REVISED CLASS BREAKS & NOTE 21 PER ECN 6750 & 6751.									
21	5662									
	ADDED CLASS BOUNDARIES (OR HX PER FCR M-20489R), MOVED SUPPLY VENT PER FCR M-20486									
20	5537									
	DELETED FROM VALVES 0-FSV-32-87 & 0-FSV-32-87 PER FCR A-10451									
19	5317									
	REV NOTE 23, ADDED NOTED 24 PER ECN 5317									
18	5318, 5297									
	ADDED NOTE 23 PER ECN 5317 AND 5318, REV ACK 4-8 PER FCR A-10363 AND ECN 5297									
17	5018									
	REV STATION SERVICE AIR COMP D PER ECN 5018									

DSGN J.G. LOWE
DRWN J.G. LOWE
CHKD J.F. LUNG
SUPV
INSP
ENGINEER

POWERHOUSE
TURBINE BLDG

D-23

MECHANICAL
FLOW DIAGRAM – ESSENTIAL
RAW COOLING WATER SYSTEM

WATTS BAR NUCLEAR PLANT
TENNESSEE VALLEY AUTHORITY
DIVISION OF ENGINEERING DESIGN

Q

SUBMITTED | RECOMMENDED | APPROVED

KNOXVILLE | 85 M 47W845-5 R23

RECORD DRAWING AS CONSTRUCTED

COMPANION DRAWINGS: 47W845-1,2,3,&4
FSAR FIG. 9.2-4A

INSPECTED AND APPROVED FOR ISSUE

DESIGN PROJECT MANAGER

THIS DRAWING IS UNDER CONFIGURATION CONTROL

PRINTS REQD-R
BR or PROJ | DWG SIZE F | H
ME
EE
CE
AD
CD
ED
MD
BF
SW
BL
PA

85 M 47W845-5