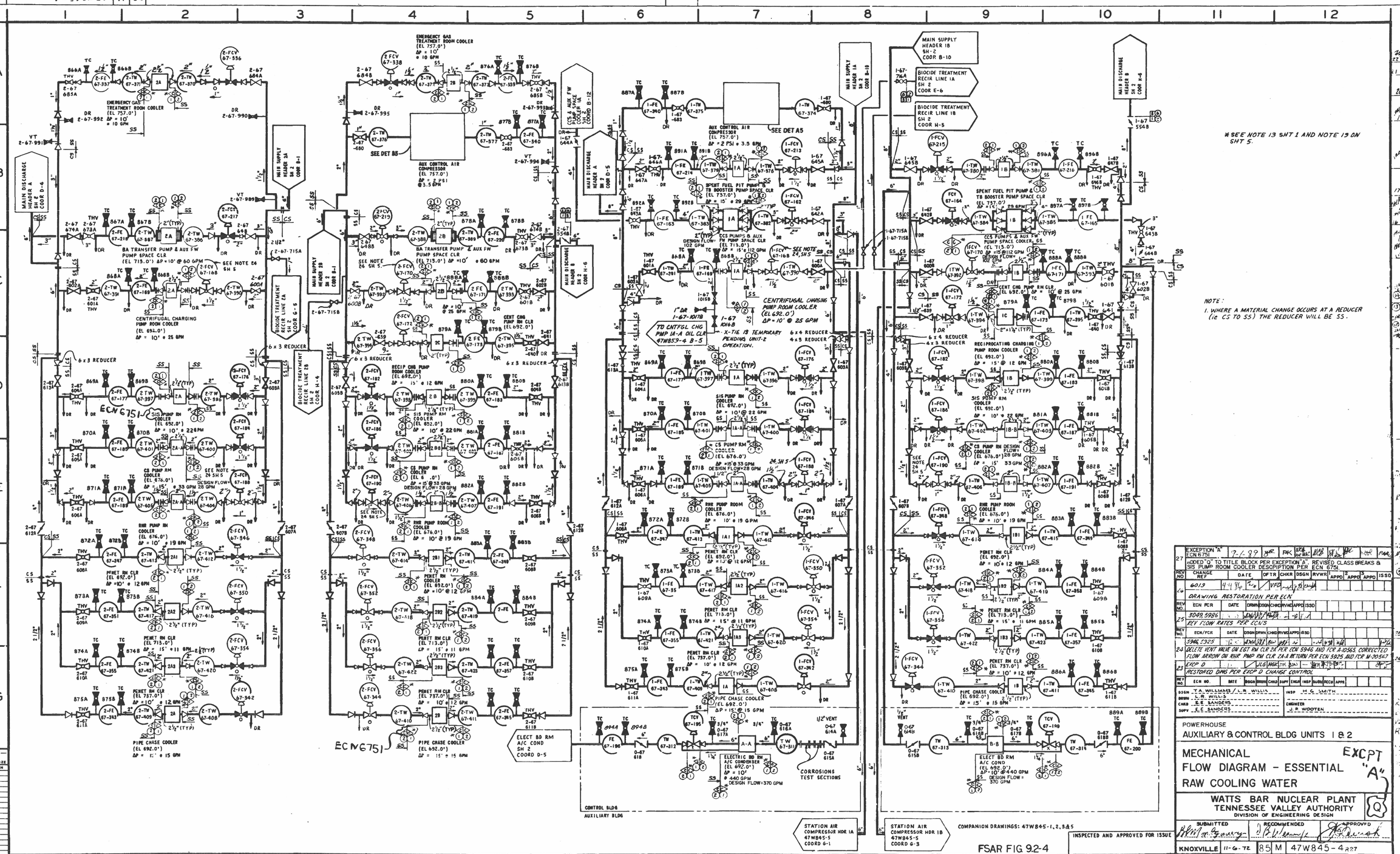

* SEE NOTE 13 SHT 1 AND NOTE 19 ON SHT 5.

NOTE:
1. WHERE A MATERIAL CHANGE OCCURS AT A REDUCER (ie CS TO SS) THE REDUCER WILL BE SS.

COMPANION DRAWINGS: 47W845-1,2,3&5

FSAR FIG 9.2-4

INSPECTED AND APPROVED FOR ISSUE

REV NO.	CHANGE REF	DATE	DFTR	CHKR	DSGN	RVWR	APPD	APPD	APPD	ISSD
27	EXCEPTION "A" ECN 6751	7-6-89								
	ADDED "Q" TO TITLE BLOCK PER EXCEPTION "A". REVISED CLASS BREAKS & SIS PUMP ROOM COOLER DESCRIPTION PER ECN 6751.									
26	6019	4-4-86								
	DRAWING RESTORATION PER ECN									
25	3049, 5986									
	REV FLOW RATES PER ECN'S									
24	5946, 5925									
	DELETE VENT VALVE ON EGT RM CLR 2A PER ECN 5946 AND FCR A-10565. CORRECTED FLOW ARROW ON RHR PMP RM CLR 2A-A RETURN PER ECN 5925 AND FCR M-20567									
23	EXCP D									
	RESTORED DWG PER EXCP D CHANGE CONTROL									

DSGN T.A. WILLIAMS / L.R. WILLIS
DRWN L.R. WILLIS
CHKD E.E. SANDERS
SUPV E.E. SANDERS
INSP H.G. SMITH
ENGINEER J.P. WOOTEN

POWERHOUSE
AUXILIARY & CONTROL BLDG UNITS 1 & 2

MECHANICAL
FLOW DIAGRAM - ESSENTIAL
RAW COOLING WATER

EXCPT "A"

WATTS BAR NUCLEAR PLANT
TENNESSEE VALLEY AUTHORITY
DIVISION OF ENGINEERING DESIGN

SUBMITTED | RECOMMENDED | APPROVED

KNOXVILLE 11-6-72 85 M 47W845-4 R27

RECORD DRAWING AS CONSTRUCTED

THIS DRAWING IS UNDER CONFIGURATION CONTROL

RESTORED DRAWING
THIS DRAWING IS THE PHOTOGRAPHICALLY RESTORED AND SUPERVISOR 47W845-4 R27 10-17-88
DRAFTING CHECKER
DRAFTING SUPERVISOR

ACCEPTED FOR USE BY WBP

D-22