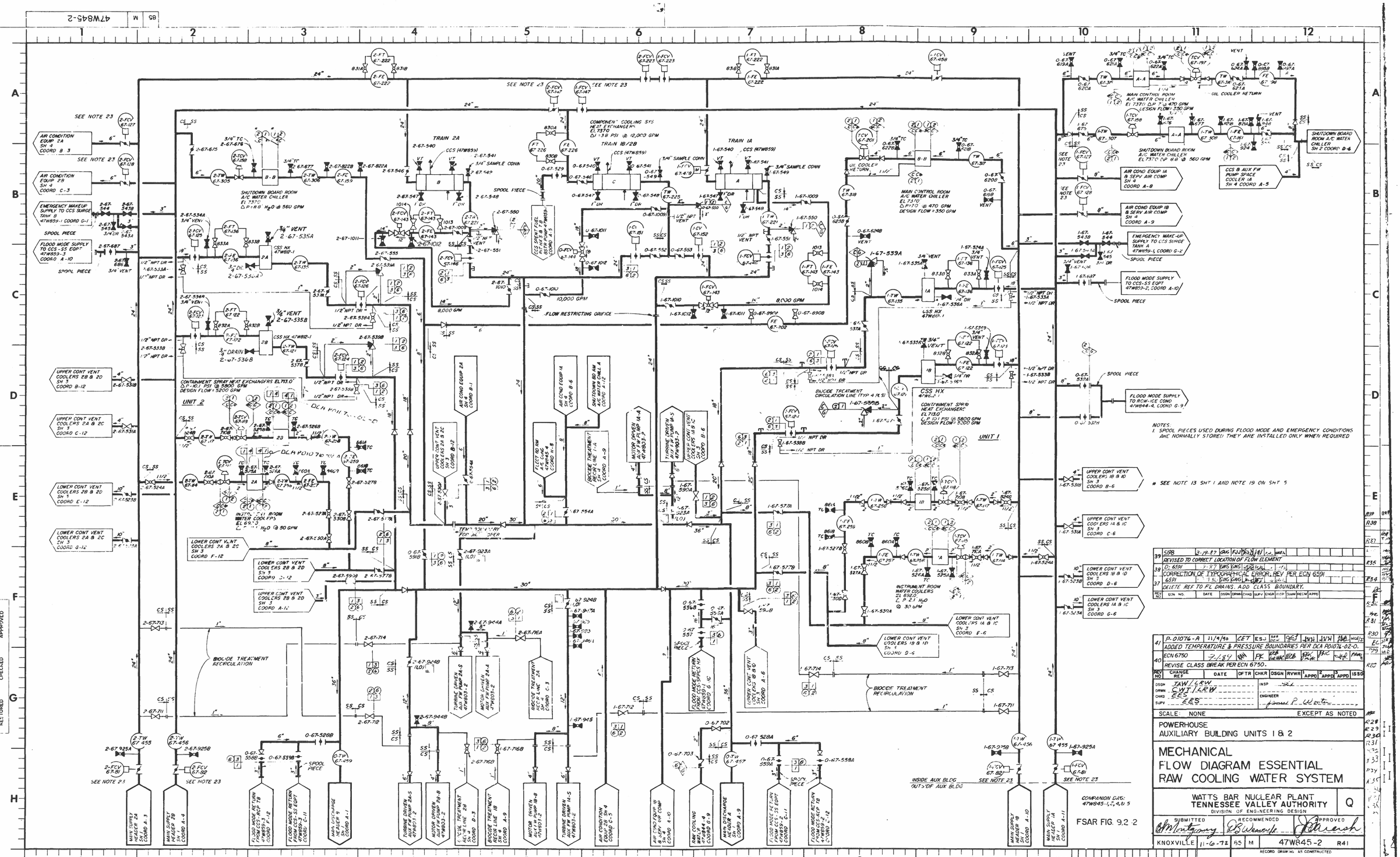
TRAIN 2A
TRAIN 1B/2B
TRAIN 1A
COMPONENT COOLING SYS HEAT EXCHANGER EL 737.0
MAIN CONTROL ROOM A/C WATER CHILLER EL 737.0
SHUTDOWN BOARD ROOM A/C WATER CHILLER EL 737.0
CONTAINMENT SPRAY HEAT EXCHANGERS EL 713.0
CSS HX 47W812-1
CSS HX 47W812-2
CSS HX 47W812-3
UNIT 2
UNIT 1
BIOCIDE TREATMENT RECIRCULATION
FLOW RESTRICTING ORIFICE
10,000 GPM
8,000 GPM
SEE NOTE 23
AIR CONDITION EQUIP 2A SH 4 COORD B 3
AIR CONDITION EQUIP 2B SH 4 COORD C-3
EMERGENCY MAKEUP SUPPLY TO CCS SURGE TANK B 47W859-1 COORD G-1
FLOOD MODE SUPPLY TO CCS-SS EQPT 47W859-3 COORD A-10
SHUTDOWN BOARD ROOM A/C WATER CHILLER EL 737.0
AIR COND EQUIP 1A SH 4 COORD A-8
AIR COND EQUIP 1B & SERV AIR COMP SH 4 COORD A-9
EMERGENCY MAKE-UP SUPPLY TO CCS SURGE TANK A 47W859-1, COORD G-2
FLOOD MODE SUPPLY TO CCS-SS EQPT 47W859-2, COORD A-10
FLOOD MODE SUPPLY TO RCW-ICE COND 47W844-4, COORD G-9
CCS & AUX FW PUMP SPACE COOLER 1A SH 4 COORD A-5
SHUTDOWN BOARD ROOM A/C WATER CHILLER EL 737.0 @ 560 GPM
UPPER CONT VENT COOLERS 2B & 2D SH 3 COORD B-12
UPPER CONT VENT COOLERS 2A & 2C SH 3 COORD C-12
LOWER CONT VENT COOLERS 2B & 2D SH 3 COORD E-12
LOWER CONT VENT COOLERS 2A & 2C SH 3 COORD G-12
LOWER CONT VENT COOLERS 2A & 2C SH 3 COORD F-12
LOWER CONT VENT COOLERS 2B & 2D SH 3 COORD J-12
UPPER CONT VENT COOLERS 2B & 2D SH 3 COORD A-12
UPPER CONT VENT COOLERS 1B & 1D SH 3 COORD B-6
UPPER CONT VENT COOLERS 1A & 1C SH 3 COORD C-6
LOWER CONT VENT COOLERS 1B & 1D SH 3 COORD D-6
LOWER CONT VENT COOLERS 1A & 1C SH 3 COORD G-6
LOWER CONT VENT COOLERS 1A & 1C SH 3 COORD F-6
LOWER CONT VENT COOLERS 1B & 1D SH 4 COORD D-6
UPPER CONT VENT COOLERS 1B & 1D SH 3 COORD A-6
SEE NOTE 13 SHT 1 AND NOTE 19 ON SHT 5
NOTES:
1 SPOOL PIECES USED DURING FLOOD MODE AND EMERGENCY CONDITIONS AND NORMALLY STORED THEY ARE INSTALLED ONLY WHEN REQUIRED
COMPANION DWG: 47W845-1,3,4&5
FSAR FIG. 9.2-2
INSIDE AUX BLDG
OUTSIDE AUX BLDG
RESTORED DRAWING
THE DRAWING HAS BEEN COMPLETELY REDRAWN AND SUPERSEDES 47W845-2 R30
RESTORED
CHECKED
APPROVED
41 P-01076-A 11/4/90 ADDED TEMPERATURE & PRESSURE BOUNDARIES PER DCA PD1076-02-0.
40 ECN 6750 7/1/87 REVISE CLASS BREAK PER ECN 6750.
39 5198 3-19-87 REVISED TO CORRECT LOCATION OF FLOW ELEMENT
38 D-6591 2-87 CORRECTION OF TYPOGRAPHICAL ERROR. REV PER ECN 6591
37 6591 1-86 DELETE REF TO FL DRAINS. ADD CLASS BOUNDARY.
REV NO. CHANGE REF DATE DFTR CHKR DSGN RVWR APPD APPD APPD ISSD
DSGN JAW/LRW
DRWN CWT/LRW
CHKD EES
SUPV EES
INSP
ENGINEER
SCALE: NONE EXCEPT AS NOTED
POWERHOUSE
AUXILIARY BUILDING UNITS 1 & 2
MECHANICAL
FLOW DIAGRAM ESSENTIAL
RAW COOLING WATER SYSTEM
WATTS BAR NUCLEAR PLANT
TENNESSEE VALLEY AUTHORITY
DIVISION OF ENGINEERING DESIGN
Q
SUBMITTED
RECOMMENDED
APPROVED
KNOXVILLE 11-6-72 65 M 47W845-2 R41
RECORD DRAWING AS CONSTRUCTED
PRINT
SIZE
BR OR PROJ AS CE EE MC NE FD HD SD BL BW WB PW
PRINTS REQD-R
D-20