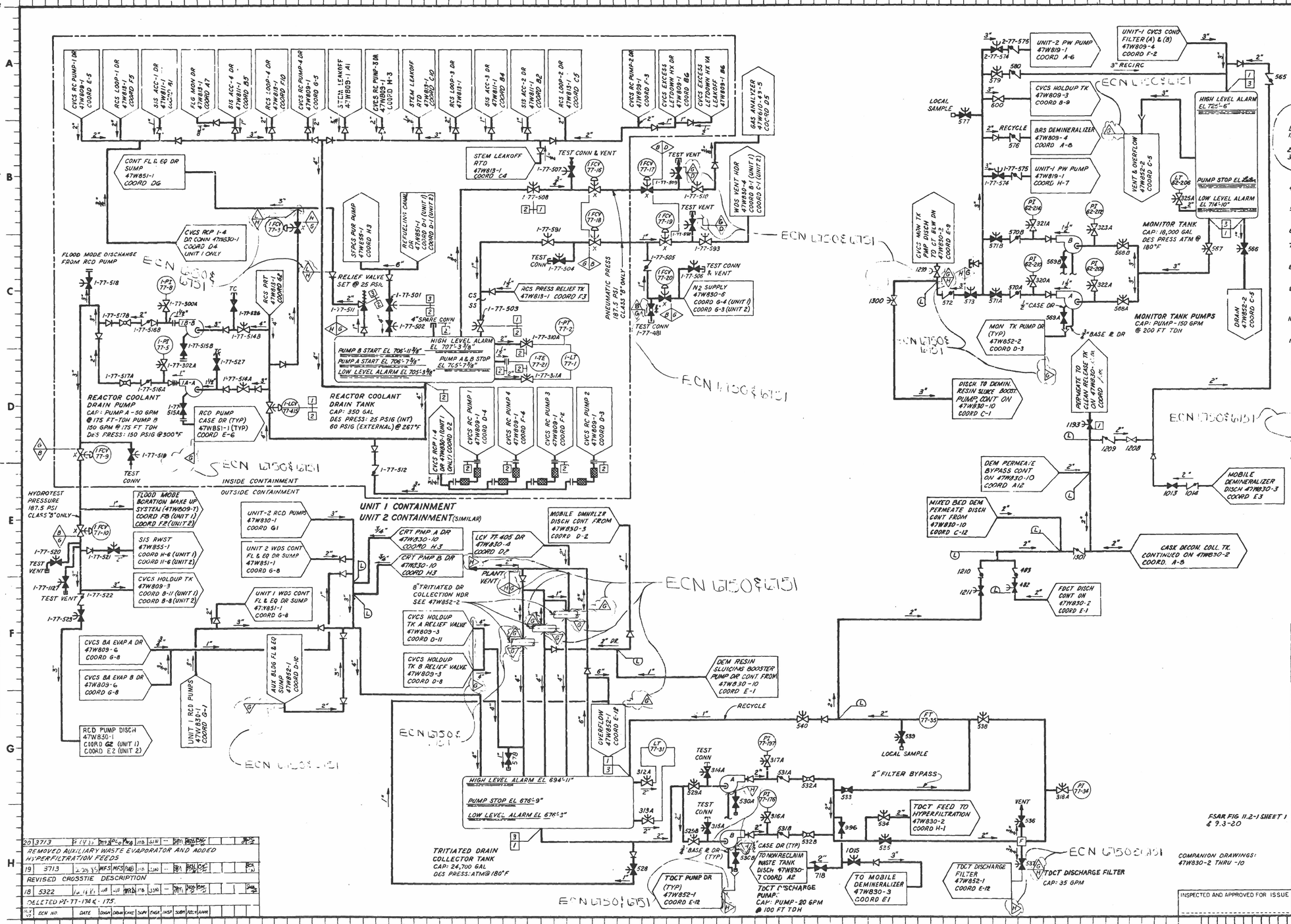

NOTES:

1. FOR DETAILED OPERATING INSTRUCTIONS OF EQUIPMENT SEE MANUFACTURER'S INSTRUCTION MANUALS.
2. ALL VALVES SAME SIZE AS PIPING UNLESS OTHERWISE NOTED.
3. (B) OR (B) INDICATES TVA SYSTEM PIPING CLASSIFICATION SHOWN ON WASTE DISPOSAL DWGS 47W560, ALL PIPING IS TVA CLASS G UNLESS OTHERWISE NOTED.
4. ALL VALVE MARKER TAGS THAT CONTAIN THE LETTER H ON 47W830-3, -5, -8, -9, -10 ARE FURNISHED BY THE HYPERFILTRATION MANUFACTURER - ATI. FOR EXAMPLE: 1277H.
5. NUMBERS IN THE BRACKETS REPRESENTS MANUFACTURER-ATI PIECE OF EQUIPMENT I.D. NUMBER. FOR EXAMPLE: [W034].
6. DESIGN PRESSURE AND TEMPERATURE FOR THE ENTIRE SYSTEM IS 150 PSI AT 180°F EXCEPT AS NOTED.
7. VALVE NUMBER CONSISTING OF UNIT NUMBER (1 OR 2) SYSTEM NUMBER (77). EXAMPLE: 1-77-516, 2-77-516; IF VALVES ARE COMMON FOR BOTH UNITS, 0 WILL BE USED INSTEAD OF UNIT NUMBER.
8. ALL PRESSURE, SAMPLE AND TEST CONNECTIONS ARE 3/4" UNLESS OTHERWISE NOTED.
9. CONST SHALL DETERMINE IF THE COMPONENTS IN THE SYSTEM ARE LIMITING COMPONENTS TO THE HYDROSTATIC TEST. ASTM CODE CASES INVOLVING HYDROSTATIC TESTING MAY BE USED IF EN DES APPRUVES THEIR APPLICATION.
10. REFER TO 47W560-1 (NOTES 24 & 25) FOR IDENTIFICATION OF SYSTEM POSITIONS OF CLASS G, H, K & L THAT REQUIRE THE HYDROSTATIC TEST TO BE UNDER THE QA PROGRAM.
11. 1 2 OR 7 INDICATES PRESSURE CHANGES AS LISTED IN THE DESIGN PRESSURE TABLE BELOW.

PRESS CHG NO	DESIGN PRESSURE	HYDRO TEST PRESS ASME III	HYDRO TEST PRESS ANSI B31.1	PNEU TEST PRESS ASME III	PNEU TEST PRESS ANSI B31.1
1	150	187.5	225	187.5	180
2	65	31.25	37.5	31.25	30
3	ATMOSPHERIC	0	0	0	0
4	100	125	150	125	120
5	210	262.5	315	262.5	252
6	1250	1562.5	1875	1562.5	1500
7	1000	1250	1500	1250	1200

13. SEE DESIGN CRITERIA NO. WB-DC-40-48 FOR LIQUID RADWASTE DISPOSAL SYSTEM MODIFICATION.

M(L) DENOTES THE BOUNDARIES OF THE LIMITED QUALITY ASSURANCE AS REQUIRED BY THE NUCLEAR QUALITY ASSURANCE MANUAL VOL. I, PART I, SECTION 1.3.

(NOTES CONT ON 47W830-9)

REV NO	CHANGE REF	DATE	DFTR	CHKR	DSGN	RVWR	1 APPD	2 APPD	3 APPD	ISSD
24	ECN 6750 & 6751	1-6-94								
	REVISED ADDED & DELETED CLASS. AREAS & REVISED NOTE 3 & DELETED NOTE 12 PER ECN 6750 & 6751.									
23	ECN 6504	5-4-88								
	REV MONITOR TK HIGH LEVEL ALARM EL PER ECN 6321, ADD & STATUS PER ECN 7									
22	5994 & 5965	4-5-86								
	DELETED DEMIN WATER TO RCPT PUMPS PER ECN									
21	5713, 5994, 5965									
	MINOR INTERFACE REV. (5713). ADD RCD PMP GSW. (5994, 5965)									

REV NO	ECN/FCR	DATE	DRWN	DSGN	CHKD	RVWD	APPD	ISSD
20	3713	2-24-75	MFS	MFS	JWD	JLN	--	BRM
	REMOVED AUXILIARY WASTE EVAPORATOR AND ADDED HYPERFILTRATION FEEDS							
19	3713	2-24-75	MFS	MFS	JWD	JLN	--	BRM
	REVISED CROSSTIE DESCRIPTION							
18	5322	4-16-71	JWD	JWD	JTB	JLN	--	BRM
	DELETED PI-77-174 & -175.							

REV NO	ECN NO	DATE	DSGN	DRWN	CHKD	SUPV	ENGR	INSP	SUPV	RECR	ALARM

RESTORED DRAWING
THIS DRAWING HAS BEEN COMPLETELY REDRAWN AND SUPERSEDES 47W830-1 R12 3-3-82
RESTORED — CHECKED — APPROVED

DESIGN T.V. BLOSSER
DRAWN T.V.B. 9-19-88
CHKD E.H. BURNS
SUPV J.L. FENNER
INSP
COMPUTER Robert E. Montgomery

SCALE: NTS — EXCEPT AS NOTED

POWERHOUSE
AUXILIARY BLDG & REACTOR BLDG UNIT 1 & 2

MECHANICAL FLOW DIAGRAM WASTE DISPOSAL SYSTEM

D-1B

FSAR FIG 11.2-1 SHEET 1 & 9.3-20

COMPANION DRAWINGS: 47W830-2 THRU -10

WATTS BAR NUCLEAR PLANT
TENNESSEE VALLEY AUTHORITY
DIVISION OF ENGINEERING DESIGN

Q

SUBMITTED — RECOMMENDED — APPROVED
KNOXVILLE 7-18-74 — R.M. Pierce

85 M 47W830-1 R24

RECORD DRAWING AS CONSTRUCTED

INSPECTED AND APPROVED FOR ISSUE

PRINT — SIZE

BR OR PROJ ME EE CE AD CD ED MD TP EP SW EN HP YC
PRINTS REQD-R