MECHANICAL	
FIRST NO. USED	500
DELETED NOS	508, 511, 518, 529, 531
LAST NO. USED	535
OPEN NOS	536 & UP

INSTRUMENT	
FIRST NO. USED	50A
DELETED NOS	
LAST NO. USED	58A
OPEN NOS	59A & UP

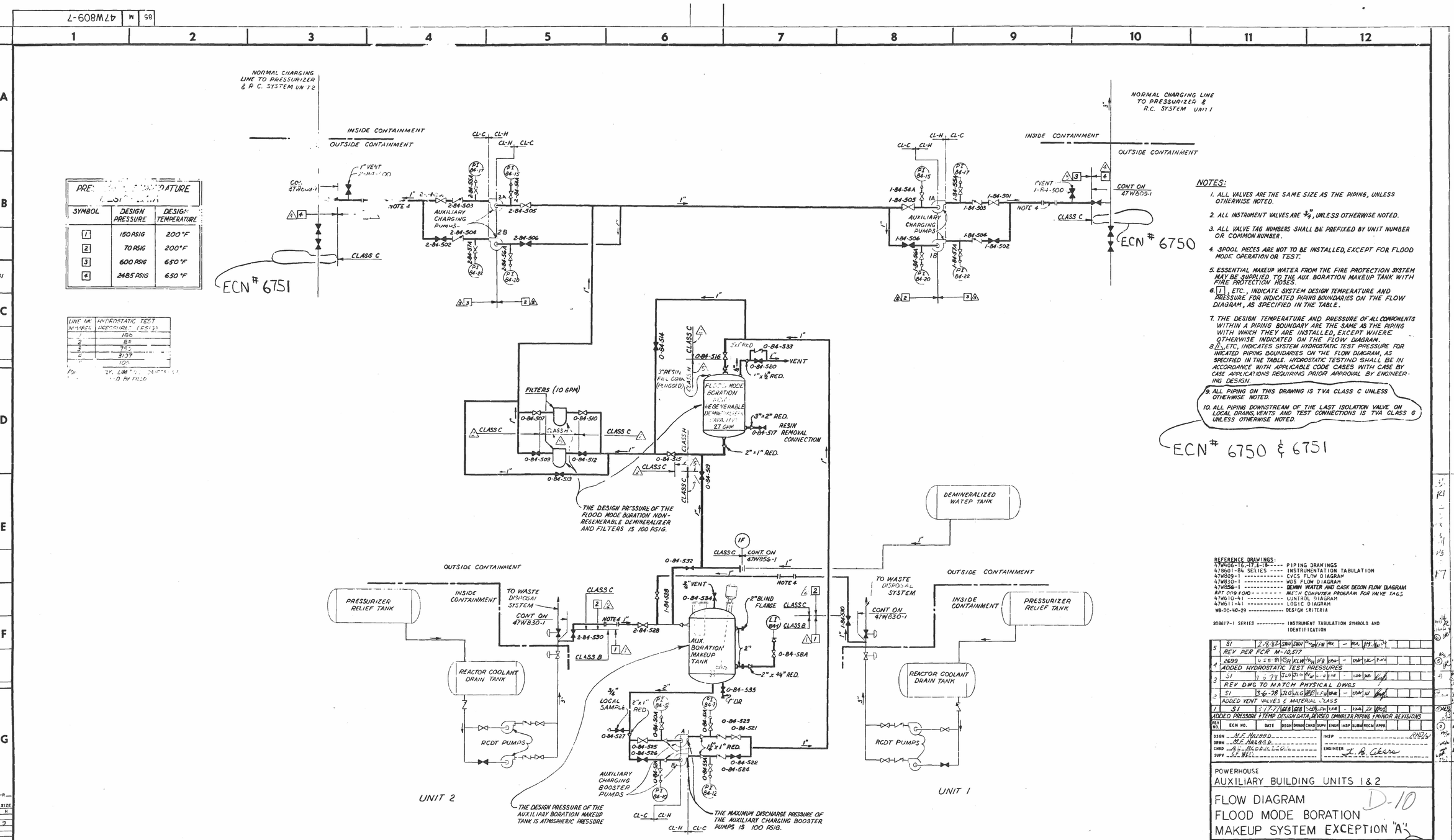

SYMBOL	DESIGN PRESSURE	DESIGN TEMPERATURE
1	150 PSIG	200°F
2	70 PSIG	200°F
3	600 PSIG	650°F
4	2485 PSIG	650°F

LINE MK NUMBER	HYDROSTATIC TEST PRESSURE (PSIG)
1	188
2	88
3	785
4	3107
5	100

NOTES:

1. ALL VALVES ARE THE SAME SIZE AS THE PIPING, UNLESS OTHERWISE NOTED.
2. ALL INSTRUMENT VALVES ARE 3/4", UNLESS OTHERWISE NOTED.
3. ALL VALVE TAG NUMBERS SHALL BE PREFIXED BY UNIT NUMBER OR COMMON NUMBER.
4. SPOOL PIECES ARE NOT TO BE INSTALLED, EXCEPT FOR FLOOD MODE OPERATION OR TEST.
5. ESSENTIAL MAKEUP WATER FROM THE FIRE PROTECTION SYSTEM MAY BE SUPPLIED TO THE AUX BORATION MAKEUP TANK WITH FIRE PROTECTION HOSES.
6. [1], ETC., INDICATE SYSTEM DESIGN TEMPERATURE AND PRESSURE FOR INDICATED PIPING BOUNDARIES ON THE FLOW DIAGRAM, AS SPECIFIED IN THE TABLE.
7. THE DESIGN TEMPERATURE AND PRESSURE OF ALL COMPONENTS WITHIN A PIPING BOUNDARY ARE THE SAME AS THE PIPING WITH WHICH THEY ARE INSTALLED, EXCEPT WHERE OTHERWISE INDICATED ON THE FLOW DIAGRAM.
8. △1, ETC, INDICATES SYSTEM HYDROSTATIC TEST PRESSURE FOR INDICATED PIPING BOUNDARIES ON THE FLOW DIAGRAM, AS SPECIFIED IN THE TABLE. HYDROSTATIC TESTING SHALL BE IN ACCORDANCE WITH APPLICABLE CODE CASES WITH CASE BY CASE APPLICATIONS REQUIRING PRIOR APPROVAL BY ENGINEERING DESIGN.
9. ALL PIPING ON THIS DRAWING IS TVA CLASS C UNLESS OTHERWISE NOTED.
10. ALL PIPING DOWNSTREAM OF THE LAST ISOLATION VALVE ON LOCAL DRAINS, VENTS AND TEST CONNECTIONS IS TVA CLASS G UNLESS OTHERWISE NOTED.

ECN # 6750 & 6751

REFERENCE DRAWINGS:

47W405-16,-17,&-18	PIPING DRAWINGS
47B601-84 SERIES	INSTRUMENTATION TABULATION
47W809-1	CVCS FLOW DIAGRAM
47W830-1	WDS FLOW DIAGRAM
47W856-1	DEMIN WATER AND CASK DECON FLOW DIAGRAM
RPT 0098100	MECH COMPUTER PROGRAM FOR VALVE TAGS
47W610-41	CONTROL DIAGRAM
47W611-41	LOGIC DIAGRAM
WB-DC-40-29	DESIGN CRITERIA
308617-1 SERIES	INSTRUMENT TABULATION SYMBOLS AND IDENTIFICATION

REV NO.	ECN NO.	DATE	DSGN	DRWN	CHKD	SUPV	ENGR	INSP	SUBM	RECM	APPR
5	S1	2-8-82	SHW	SWH	[illegible]	[illegible]	[illegible]	—	[illegible]	[illegible]	[illegible]
	REV PER FCR M-10,517										
4	2699	4-28-81	[illegible]	[illegible]	[illegible]	[illegible]	[illegible]	—	[illegible]	[illegible]	[illegible]
	ADDED HYDROSTATIC TEST PRESSURES										
3	S1	1-5-79	[illegible]	[illegible]	[illegible]	[illegible]	[illegible]	—	[illegible]	[illegible]	[illegible]
	REV DWG TO MATCH PHYSICAL DWGS										
2	S1	3-6-78	[illegible]	[illegible]	[illegible]	[illegible]	[illegible]	—	[illegible]	[illegible]	[illegible]
	ADDED VENT VALVES & MATERIAL CLASS										
1	S1	2-17-77	GEB	GEB	[illegible]	[illegible]	[illegible]	—	[illegible]	[illegible]	[illegible]
	ADDED PRESSURE & TEMP DESIGN DATA, REVISED DEMINERLZR PIPING & MINOR REVISIONS										

DSGN N.F. HAJABD
DRWN N.F. HAJABD
CHKD A.L. ROBERTSON
SUPV L.F. WELL
INSP RHD/6
ENGINEER J. B. Akers

POWERHOUSE
AUXILIARY BUILDING UNITS 1 & 2

FLOW DIAGRAM
FLOOD MODE BORATION
MAKEUP SYSTEM EXCEPTION "A"

D-10

WATTS BAR NUCLEAR PLANT
TENNESSEE VALLEY AUTHORITY
DIVISION OF ENGINEERING DESIGN

Q

SUBMITTED	RECOMMENDED	APPROVED
J. B. Akers	J. C. Kapp	R. M. Fitzpatrick

KNOXVILLE 11-22-75 | 85 | M | 47W809-7 R7

RECORD DRAWING AS CONSTRUCTED

FSAR FIG. 9.3-18

INSPECTED AND APPROVED FOR ISSUE

DESIGN PROJECT MANAGER

THIS DRAWING IS A DUPLICATE OF SEQUOYAH NUCLEAR PLANT DWG 47W809-7 R8 EXCEPT AS NOTED BY ENCIRCLEMENTS ON RO OF THIS DRAWING.

THIS DRAWING IS UNDER CONFIGURATION CONTROL

REV NO.	CHANGE REF	DATE	DFTR	CHKR	DSGN	RVWR	APPD	APPD	APPD	ISSD
7	EXCEPTION "A" ECN 6750 & 6751	10-18-88	AKJ	PK	[illegible]	[illegible]	[illegible]	[illegible]	[illegible]	[illegible]
	ADDED Q TO TITLE BLOCK PER EXCEPTION "A", ADDED NOTES 9 & 10 & DELETED CLASS BREAKS PER ECN 6750 & 6751									
6	S1	10-[illegible]-82	SWH	LKD	[illegible]	EKA	—	[illegible]	[illegible]	
	REV PER FCR M-10633, M-10644									

PRINTS REQD-R B-T or PROJ

	DWG	SIZE
ME		
EE		
CE		
AO		
CO		
ED		
MD		
BF		
SW		
BL		
PA		