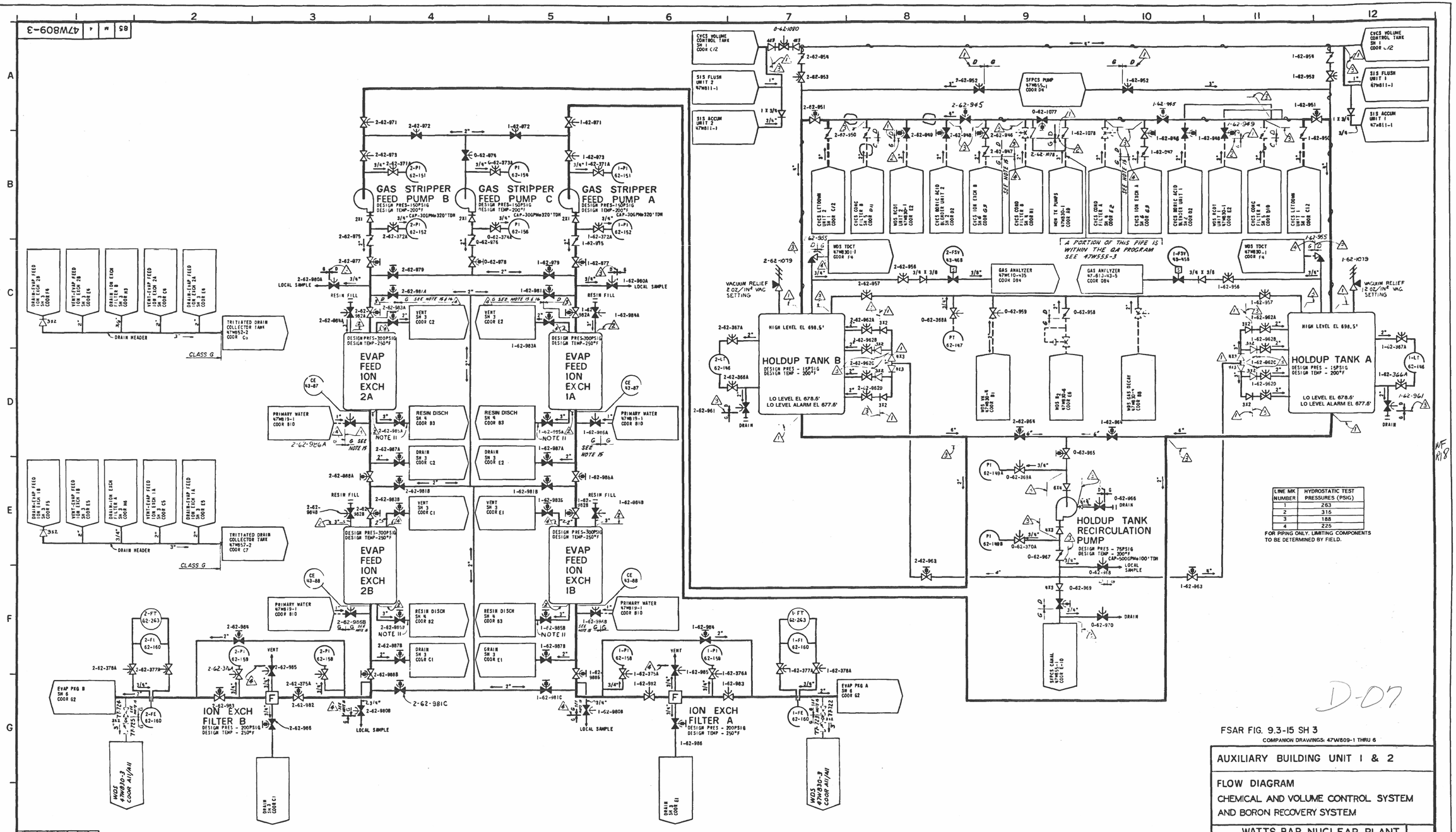

LINE MK NUMBER	HYDROSTATIC TEST PRESSURES (PSIG)
1	263
2	316
3	188
4	225

FOR PIPING ONLY. LIMITING COMPONENTS TO BE DETERMINED BY FIELD.

D-07

FSAR FIG. 9.3-15 SH 3

COMPANION DRAWINGS: 47W809-1 THRU 6

AUXILIARY BUILDING UNIT 1 & 2

FLOW DIAGRAM
CHEMICAL AND VOLUME CONTROL SYSTEM AND BORON RECOVERY SYSTEM

WATTS BAR NUCLEAR PLANT
TENNESSEE VALLEY AUTHORITY
DIVISION OF ENGINEERING DESIGN

Q

SUBMITTED	RECOMMENDED	APPROVED
*	*	*

KNOXVILLE 6-17-73 85 M 4 47W809-3 R18

RECORD DRAWING AS CONSTRUCTED

* FOR ORIGINAL SIGNATURES, SEE MICROFILM COPY

REV NO	CHANGE REF	DATE	DFTR	CHKR	DSGN	RVWR	1 APPD	2 APPD	3 APPD	ISSD
18	ADMIN M-27846-A DRAWING ENHANCED FOR LEGIBILITY. REVISED PER DCA M27846-199-0.	5-1-96	EHP			NR	NR	NR		

SCANNED DOCUMENT
THIS IS A SCANNED DOCUMENT MAINTAINED ON THE WBNP OPTIGRAPHICS SCANNER DATABASE