ENCLOSURE 2 TO NL-10-045

2009 Offsite Dose Calculation Manual Changes and Justification Package

ENTERGY NUCLEAR OPERATIONS, INC.
INDIAN POINT NUCLEAR GENERATING UNIT NOS. 1, 2, AND 3
DOCKET NOS. 50-03, 50-247, AND 50-286
LICENSE NO. DPR-5, DPR-26, AND DPR-64

Entergy Nuclear Northeast

Indian Point Energy Center

Units 1, 2, and 3

OFFSITE DOSE CALCULATION MANUAL

(ODCM)

Rev. 2

WRITTEN BY: Steve Sandike 6-18-09
date

REVIEWED BY: 7/8/09
OSRC mtg #09-016
date

OSRC REVIEW: Donna Tyner 7/9/09
date

APPROVED BY: Anthony Williams for Anthony Vitale 7/16/09
date

EFFECTIVE DATE: 7-24-9

		PAGE
Table of Contents		ii
List of Tables and Figures		vi
Introduction		viii
PART I – RADIOLOGICAL EFFLUENT CONTROLS		
D 1.0	**USE AND APPLICATION**	
D 1.1	Definitions	D 1.1-1
D 1.2	Logical Connectors	D 1.2-1
D 1.3	Completion Times	D 1.2-1
D 1.4	Frequency	D 1.2-1
D 2.0	**SAFETY LIMITS (Not Used)**	
D 3.0	**APPLICABILITY**	
D 3.0	ODCM Limiting Condition for Operation (DLCO)	D 3.0-1
D 3.0	ODCM Surveillance Requirement (DSR)	D 3.0-2
D 3.1	**RADIOACTIVE LIQUID EFFLUENTS**	
D 3.1.1	Liquid Effluents Concentration	D 3.1.1-1
D 3.1.2	Liquid Effluents Dose	D 3.1.2-1
D 3.1.3	Liquid Radwaste Treatment System	D 3.1.3-1
D 3.1.4	Liquid Holdup Tanks	D 3.1.4-1
D 3.2	**RADIOACTIVE GASEOUS EFFLUENTS**	
D 3.2.1	Gaseous Effluents Dose Rate	D 3.2.1-1
D 3.2.2	Gaseous Effluents Dose - Noble Gas	D 3.2.2-1
D 3.2.3	Gaseous Effluents Dose – Iodine and Particulate	D 3.2.3-1
D 3.2.4	Gaseous Radwaste Treatment System	D 3.2.4-1
D 3.2.5	Ventilation Exhaust Treatment System	D 3.2.5-1
D 3.2.6	Gas Storage Tanks	D 3.2.6-1
D 3.3	**INSTRUMENTATION**	
D 3.3.1	Radioactive Liquid Effluent Monitoring Instrumentation	D 3.3.1-1
D 3.3.2	Radioactive Gaseous Effluent Monitoring Instrumentation	D 3.3.2-1
D 3.4	**RADIOACTIVE EFFLUENTS TOTAL DOSE**	
D 3.4.1	Radioactive Effluents Total Dose	D 3.4.1-1

		PAGE
D 3.5	**RADIOLOGICAL ENVIRONMENTAL MONITORING**	
D 3.5.1	Monitoring Program	D 3.5.1-1
D 3.5.2	Land Use Census	D 3.5.2-1
D 3.5.3	Interlaboratory Comparison Program	D 3.5.3-1
D 3.6	**SOLID RADIOACTIVE WASTE**	
D 3.6.1	Solid Radwaste Treatment System	D 3.6.1-1
D 4.0	**DESIGN FEATURES**	
D 4.1	UNRESTRICTED AREA	D 4.1-1
D 5.0	**ADMINISTRATIVE CONTROLS**	
D 5.1	Annual Radiological Environmental Operating Report	D 5.1-1
D 5.2	Radioactive Effluent Release Report	D 5.2-1
D 5.3	Special Reports	D 5.3-1
D 5.4	Major Changes to Radwaste Treatment Systems	D 5.4-1
D 5.5	Process Control Program (PCP)	D 5.5-1
D 5.6	Radiological Ground Water Monitoring Program (RGWMP)	D 5.6-1

BASES

		PAGE
B D 3.0	**APPLICABILITY**	
B D 3.0	ODCM Limiting Condition for Operation (DLCO)	B D 3.0-1
B D 3.0	ODCM Surveillance Requirement (DSR)	B D 3.0-1
B D 3.1	**RADIOACTIVE LIQUID EFFLUENTS**	
B D 3.1.1	Liquid Effluents Concentration	B D 3.1.1-1
B D 3.1.2	Liquid Effluents Dose	B D 3.1.2-1
B D 3.1.3	Liquid Radwaste Treatment System	B D 3.1.3-1
B D 3.1.4	Liquid Holdup Tanks	B D 3.1.4-1
B D 3.2	**RADIOACTIVE GASEOUS EFFLUENTS**	
B D 3.2.1	Gaseous Effluents Dose Rate	B D 3.2.1-1
B D 3.2.2	Gaseous Effluents Dose - Noble Gas	B D 3.2.2-1
B D 3.2.3	Gaseous Effluents Dose – Iodine and Particulate	B D 3.2.3-1
B D 3.2.4	Gaseous Radwaste Treatment System	B D 3.2.4-1
B D 3.2.5	Ventilation Exhaust Treatment System	B D 3.2.5-1
B D 3.2.6	Gas Storage Tanks	B D 3.2.6-1
B D 3.3	**INSTRUMENTATION**	
B D 3.3.1	Radioactive Liquid Effluent Monitoring Instrumentation	B D 3.3.1-1
B D 3.3.2	Radioactive Gaseous Effluent Monitoring Instrumentation	B D 3.3.2-1
B D 3.4	**RADIOACTIVE EFFLUENTS TOTAL DOSE**	
B D 3.4.1	Radioactive Effluents Total Dose	B D 3.4.1-1
B D 3.5	**RADIOLOGICAL ENVIRONMENTAL MONITORING**	
B D 3.5.1	Radiological Environmental Monitoring Program	B D 3.5.1-1
B D 3.5.2	Land Use Census	B D 3.5.2-1
B D 3.5.3	Interlaboratory Comparison Program	B D 3.5.3-1
B D 3.6	**SOLID RADIOACTIVE WASTE**	
B D 3.6.1	Solid Radwaste Treatment System	B D 3.6.1-1

PART II CALCULATIONAL METHODOLOGIES

		PAGE
1.0	**RADIATION MONITORS AND SETPOINTS**	
1.1	Effluent Monitoring System Description	1
1.2	Setpoints for Airborne Effluent Monitors	1
1.3	Setpoints for Liquid Effluent Monitors	2
2.0	**LIQUID EFFLUENT METHODOLOGY**	
2.1	Liquid Effluent Releases – General Information	6
2.2	Liquid Effluent Concentrations	9
2.3	Liquid Effluent Dose Calculation Requirements	12
2.4	Dose Methodology (Computer Calculation)	13
2.5	Backup Simplified Dose Methodology	16
2.6	Site-Specific Bio-Accumulation and Dose Factors	16
3.0	**GASEOUS EFFLUENT METHODOLOGY**	
3.1	Gaseous Effluent Releases – General Information	25
3.2	Gaseous Effluent Dose Calculation Requirements	30
3.3	Dose Methodology (Computer Calculation)	31
3.4	Backup Simplified Dose Methodology	43
3.5	Calculation of Meteorological Dispersion Factors	46
3.6	Justification and Use of Finite Cloud Assumptions for Assessing SB Dose	51
4.0	**TOTAL DOSE DETERMINATIONS**	
4.1	10CFR190 Dose Evaluation	100
4.2	Doses from Liquid Releases	100
4.3	Doses from Atmospheric Releases	100
4.4	Doses to MEMBERS OF THE PUBLIC Visiting the Site	101
5.0	**LOWER LIMIT OF DETECTION**	102
REFERENCES		104
APPENDICES		
Appendix A:	Summary of Radiological Effluent Controls	107
Appendix B:	Liquid Effluent Simplified Flow Diagram	108
Appendix C:	Gaseous Effluent Simplified Flow Diagram	110
Appendix D:	Steam Partition Factor Calculation (f)	112
Appendix E:	Allowed Diluted Concentration (ADC)	113
Appendix F:	Conversion Factors for Liquid Effluent Monitors	114
Appendix G:	Environmental Sampling Points	115
Appendix H:	Interlaboratory Comparison Program	122
Appendix I:	Calculation of Allowable Release Rates for Indian Point Units 2 and 3	123
Appendix J:	Groundwater Flow and Offsite Dose Calculation Details	130

LIST OF TABLES AND FIGURES PAGE

PART I – RADIOLOGICAL EFFLUENT CONTROLS

Tables:

D 3.1.1-1	Radioactive Liquid Waste Sampling and Analysis	D 3.1.1-2
D 3.2.1-1	Radioactive Gaseous Waste Sampling and Analysis	D 3.2.1-2
D 3.3.1-1	Radioactive Liquid Effluent Monitoring Instrumentation	D 3.3.1-6
D 3.3.2-1	Radioactive Gaseous Effluent Monitoring Instrumentation	D 3.3.2-5
D 3.5.1-1	Radiological Environmental Monitoring Program	D 3.5.1-6
D 3.5.1-2	Reporting Levels for Radioactivity Concentrations In Environmental Samples	D 3.5.1-9
D 3.5.1-3	Detection Capabilities for Environmental Sample Analysis	D 3.5.1-10

Figures:

4.1-1	MAP DEFINING UNRESTRICTED AREAS FOR RADIOACTIVE GASEOUS AND LIQUID EFFLUENTS	D 4.1-2
4.1-2	MAP DEFINING RELEASE POINTS	D 4.1-3

LIST OF TABLES AND FIGURES PAGE

PART II - CALCULATIONAL METHODOLOGIES

1-1	Unit 2 Effluent Radiation Monitor System Data	4
1-2	Unit 3 Effluent Radiation Monitor System Data	5
2-1	Site Related Adult Ingestion Dose Commitment Factors	18
2-2	Site Related Teen Ingestion Dose Commitment Factors	20
2-3	Site Related Child Ingestion Dose Commitment Factors	22
2-4	Bio-Accumulation Factors for Liquid Effluent Isotopes	24
3-1a	Adult Inhalation Dose Factors	52
3-1b	Teen Inhalation Dose Factors	54
3-1c	Child Inhalation Dose Factors	56
3-1d	Infant Inhalation Dose Factors	58
3-2	TB/Skin GP Dose Factors, w/ Half Life & Stable Element Transfer Data	60
3-3a	Adult Ingestion Dose Factors	62
3-3b	Teen Ingestion Dose Factors	64
3-3c	Child Ingestion Dose Factors	66
3-3d	Infant Ingestion Dose Factors	68
3-4	Total Body Dose Factors, Ki, from Noble Gas (Gamma)	70
3-5	Skin Dose Factors, Li, from Noble Gas (Beta)	71
3-6	Air Dose Factors, Mi, from Noble Gas (Gamma)	72
3-7	Air Dose Factors, Ni, from Noble Gas (Beta)	73
3-8	NG Dose Factors for Instantaneous and Time Average Mixtures at the SB	74
3-9	Locations of Site Boundary and Nearest Residence	75
3-10a	Adult Inhalation Ri(I)	76
3-10b	Teen Inhalation Ri(I)	78
3-10c	Child Inhalation Ri(I)	80
3-10d	Infant Inhalation Ri(I)	82
3-11a	Adult Ingestion (Leafy Vegetable) Ri(V)	84
3-11b	Teen Ingestion (Leafy Vegetable) Ri(V)	86
3-11c	Child Ingestion (Leafy Vegetable) Ri(V)	88
3-12a	Adult Grass-Cow-Milk Pathway Ri(C)	90
3-12b	Teen Grass-Cow-Milk Pathway Ri(C)	92
3-12c	Child Grass-Cow-Milk Pathway Ri(C)	94
3-12d	Infant Grass-Cow-Milk Pathway Ri(C)	96
3-13	Total Body and Skin Ground Plane Dose Factors Ri(G) and Ri(S)	98

The OFFSITE DOSE CALCULATION MANUAL (ODCM) is established and maintained pursuant to Technical Specifications Section 5.5. for both IPEC units 2 and 3. Previous revisions of each unit's ODCM have been combined to form a station ODCM. The IPEC ODCM consists of two parts:

1) Part I, Radiological Effluent Controls, (RECS) – previously, often referred to as the Radiological Effluent Technical Specifications, or RETS (Section 3.9 of original Unit 2 Technical Specifications, and Appendix B or original Unit 3 Technical Specifications).

2) Part II, Calculational Methodologies (previously often referred to as simply the "ODCM")

Part I, Radiological Effluent Controls, includes the Radiological Effluent Control Specifications (RECS) and Radiological Environmental Monitoring Programs (REMP) required by Technical Specification 5.5. It also includes descriptions of the information that should be included in the Annual Radiological Environmental Operating and Radioactive Effluent Release Reports required by each unit's Technical Specifications.

Part II, Calculational Methodologies, provides the methodology to manually calculate radiation dose rates and doses to individual persons in UNRESTRICTED AREAS in the vicinity of Indian Point due to the routine release of gaseous and liquid effluents. Long term cumulative effects are usually calculated through computer programs employing approved methodology. At IPEC, this method includes the use of ten-year averaged meteorology in the case of gaseous effluents. Other computer programs are utilized to routinely estimate the doses due to radioactivity in liquid effluents. Manual dose calculations are performed when computerized calculations are not available. The ODCM also provides setpoint methodology that is applied to effluent monitors and optionally to other process monitors.

The sources for criteria found in the ODCM and the Radiological Effluent Control Specifications include the following:

- **Liquid Effluent Release Rate:** Diluted concentrations in the discharge canal are limited to ten times the EFFLUENT CONCENTRATIONS identified in 10CFR20 Appendix B.
- **Airborne Effluent Release Rate**: Release rates are limited to corresponding dose rate limits from NUREG 0133 and 0472.
- **Integrated Radiological Effluent Dose**: The design objectives of 10CFR50 Appendix I.

The ODCM and associated tracking software implements the methodology of

1) Reg. Guide 1.109 "Calculation of Annual Doses to Man from Routine Releases of Reactor Effluents for the Purpose of Evaluating Compliance with 10CFR50 Appendix I", and
2) NUREG-0133 "Guidance Manual for Preparation of Radiological Effluent Technical Specifications for Nuclear Power Plants."

Other references may be cited to permit reasonable handling of a situation not covered by either of the two cited references. In some cases, site-specific data or reasonable simplifying assumptions are used and justified to permit formulation of more workable methodologies for implementing RECS dose calculation requirements.

Indian Point Energy Center

Offsite Dose Calculation Manual

PART I – RADIOACTIVE EFFLUENT CONTROLS

D 1.0 USE AND APPLICATION

D 1.1 Definitions

----------NOTE----------
Terms defined in Technical Specifications and the following additional defined terms appear in capitalized type and are applicable throughout these specifications and bases.

Term	Definition
GASEOUS RADWASTE TREATMENT SYSTEM	A GASEOUS RADWASTE TREATMENT SYSTEM is any system designed and installed to reduce radioactive gaseous effluents by collecting primary coolant system offgases from the primary system and providing for delay or holdup for the purpose of reducing the total radioactivity prior to release to the environment.
MEMBER(S) OF THE PUBLIC	MEMBER(S) OF THE PUBLIC includes all persons who are not occupationally associated with the site. This category does not include employees of the utility, their contractors or vendors. Also excluded from this category are persons who enter the site to service equipment or to make deliveries.
MAXIMUM PERMISSIBLE CONCENTRATION WATER (MPCW)	MPCW is that concentration of a radionuclide equal to ten times the EFFLUENT CONCENTRATIONS specified in 10CFR20, Appendix B, Table 2, Column 2.
OFFSITE DOSE CALCULATION MANUAL	The OFFSITE DOSE CALCULATION MANUAL shall contain the current methodology and parameters used in the calculation of offsite doses due to radioactive gaseous and liquid effluents, in the calculation of gaseous and liquid effluent monitoring alarm/trip setpoints, and in the conduct of the environmental radiological monitoring program.
PRIMARY TO SECONDARY LEAK	A PRIMARY TO SECONDARY LEAK is defined by a quantifiable leak rate equal to or greater than 0.5 gpd, AND a) The presence of fission or activation products in the secondary fluid, verified as Steam Generator U-tube leaks (and not from other known contamination, such as IVSWS leaks), OR b) Tritium activity in the secondary fluid indicating an increase above historical baseline (normal diffusion) of 5.00E-6 uCi/ml or greater.
PROCESS CONTROL PROGRAM	The PROCESS CONTROL PROGRAM is a manual containing and/or referencing selected operational information concerning the solidification of radioactive wastes from liquid systems.

D 1.1 Definitions

PURGE - PURGING	PURGE or PURGING is the controlled process of discharging air or gas from a confinement to maintain temperature, pressure, humidity, concentration or other operating condition, in such a manner that replacement air or gas is required to purify the confinement.
SITE BOUNDARY	The SITE BOUNDARY is that line beyond which the land is neither owned, leased, nor otherwise controlled by the licensee(s).
SOLIDIFICATION	SOLIDIFICATION is the conversion of wet wastes into a form that meets shipping and burial ground requirements.
SOURCE CHECK	A SOURCE CHECK shall be the qualitative assessment of channel response when the channel sensor is exposed to a source of increased radioactivity.
UNRESTRICTED AREA	An UNRESTRICTED AREA is any area at or beyond the SITE BOUNDARY, access to which is not controlled by the licensee(s) for purposes of protection of individuals from exposure to radiation and radioactive materials. (See Figure D 4.1-1)
VENTILATION EXHAUST TREATMENT SYSTEM	A VENTILATION EXHAUST TREATMENT SYSTEM is any system designed and installed to reduce gaseous radioiodine or radioactive material in particulate form in effluents by passing ventilation or vent exhaust gases through charcoal adsorbers and/or HEPA filters for the purpose of removing iodines or particulates from the gaseous exhaust stream prior to the release to the environment. Such a system is not considered to have any effect on noble gas effluents. Engineered Safety Feature (ESF) atmospheric cleanup systems are not considered to be VENTILATION EXHAUST TREATMENT SYSTEM components.
VENTING	VENTING is the controlled process of discharging air or gas from a confinement to maintain temperature, pressure, humidity, concentration or other operating condition, in such a manner that replacement air or gas is not provided or required.

1.0 USE AND APPLICATION

1.2 Logical Connectors

Logical Connectors are discussed in Section 1.2 of the Technical Specifications and are applicable throughout the Offsite Dose Calculation Manual and Bases.

1.3 Completion Times

Completion Times are discussed in Section 1.3 of the Technical Specifications and are applicable throughout the Offsite Dose Calculation Manual and Bases.

1.4 Frequency

Frequency is discussed in Section 1.4 of the Technical Specifications and is applicable throughout the Offsite Dose Calculation Manual and Bases

D 3.0 ODCM Limiting Condition for Operation (DLCO) Applicability

DLCO 3.0.1 DLCOs shall be met during the MODES or other specified condition in the Applicability, except as provided in DLCO 3.0.2.

DLCO 3.0.2 Upon discovery of a failure to meet a DLCO, the Required Actions of the associated Conditions shall be met, except as provided in DLCO 3.0.5.

If the DLCO is met or is no longer applicable prior to expiration of the specified Completion Time(s), completion of the Required Action(s) is not required unless otherwise stated.

DLCO 3.0.3 When a DLCO is not met and the associated ACTIONS are not met, an associated ACTION is not provided, or if directed by the associated ACTIONS, action shall be initiated within 1 hour to:

a. Restore compliance with the DLCO or associated ACTIONS, and

b. Enter the circumstances into the Corrective Action Program.

----------NOTE----------
DLCO 3.0.3.b shall be completed if DLCO 3.0.3 is entered.

Exceptions to this Specification are stated in the individual Specifications.

DLCO 3.0.4 Not Applicable to ODCM Specifications.

DLCO 3.0.5 Equipment removed from service or declared inoperable to comply with ACTIONS may be returned to service under administrative control solely to perform testing required to demonstrate its OPERABILITY or the OPERABILITY of other equipment. This is an exception to TRO 3.0.B for the system returned to service under administrative control to perform the testing required to demonstrate OPERABILITY.

D 3.0 ODCM Surveillance Requirement (DSR) Applicability

DSR 3.0.1 DSRs shall be met during the MODES or other specified conditions in the Applicability for individual DLCOs, unless otherwise stated in the DSR. Failure to meet a Surveillance, whether such failure is experienced during the performance of the Surveillance or between performances of the Surveillance, shall be failure to meet the DLCO. Failure to perform a Surveillance within the specified Frequency shall be failure to meet the DLCO except as provided in DSR 3.0.3. Surveillances do not have to be performed on inoperable equipment or variables outside specified limits.

DSR 3.0.2 The specified Frequency for each DSR is met if the Surveillance is performed within 1.25 times the interval specified in the Frequency, as measured from the previous performance or as measured from the time a specified condition of the Frequency is met.

For Frequencies specified as "once," the above interval extension does not apply.

If a Completion Time requires periodic performance on a "once per . . ." basis, the above Frequency extension applies to each performance after the initial performance.

Exceptions to this Specification are stated in the individual Specifications.

DSR 3.0.3 If it is discovered that a Surveillance was not performed within its specified Frequency, then compliance with the requirement to declare the DLCO not met may be delayed, from the time of discovery, up to 24 hours or up to the limit of the specified Frequency, whichever is greater. This delay period is permitted to allow performance of the Surveillance. A risk evaluation shall be performed for any Surveillance delayed greater than 24 hours and the risk impact shall be managed.

If the Surveillance is not performed within the delay period, the DLCO must immediately be declared not met, and the applicable Condition(s) must be entered.

When the Surveillance is performed within the delay period and the Surveillance is not met, the DLCO must immediately be declared not met, and the applicable Condition(s) must be entered.

D 3.1 RADIOACTIVE LIQUID EFFLUENTS

D 3.1.1 Liquid Effluents Concentration

DLCO 3.1.1 The concentration of radioactive material released in liquid effluents to UNRESTRICTED AREAS (Figure D 4.1-1) shall be limited to:

a. The MPCW concentrations as defined in D1.1 for radionuclides other than dissolved or entrained noble gases; and

b. 2×10^{-4} µCi/ml total activity concentration for dissolved or entrained noble gases.

APPLICABILITY: At all times.

ACTIONS

CONDITION	REQUIRED ACTION	COMPLETION TIME
A. Concentration of radioactive material released in liquid effluents to UNRESTRICTED AREAS exceeds limits.	A.1 Initiate action to restore concentration to within limits.	Immediately

SURVEILLANCE REQUIREMENTS

SURVEILLANCE		FREQUENCY
DSR 3.1.1.1	Perform radioactive liquid waste sampling and activity analysis.	In accordance with Table D 3.1.1-1
DSR 3.1.1.2	Verify the results of the DSR 3.1.1.1 analyses to assure that the concentrations at the point of release are maintained within the limits of DLCO 3.1.1.	In accordance with Table D 3.1.1-1

Table D 3.1.1-1 (Page 1 of 2)
Radioactive Liquid Waste Sampling and Analysis

LIQUID RELEASE TYPE	SAMPLE TYPE	SAMPLE FREQUENCY	MINIMUM ANALYSIS FREQUENCY	SAMPLE ANALYSIS	LOWER LIMIT OF DETECTION (LLD) in uCi/ml, (a),(g),(c)
1. Batch Waste Release Tanks (b) *eg, Waste Tanks,* *SG Draindowns, etc*	Grab Sample	Each Batch (h)	Each Batch (h)	Principal Gamma Emitters Mo-99, Ce-144 I-131	5E-7 5E-6 1E-6
	Grab Sample	One batch per 31 days (h)	31 days	Dissolved and Entrained Gases (gamma emitters)	1E-5
	Composite (d)	Each batch (h)	31 days	H-3 Gross Alpha	1E-5 1E-7
	Composite (d)	Each batch (h)	92 days	Sr-89, Sr-90	5E-8
				Fe-55	1E-6
2. Continuous Releases (e) *eg, SG Blowdown,* *U1 NCD,* *U1 SFDS,* *etc*	Composite (d)	Composite	7 days	Principal Gamma Emitters (c) Mo-99, Ce-144 I-131	5E-7 5E-6 1E-6
	Grab Sample	31 days	31 days	Dissolved and Entrained Gases (gamma emitters)	1E-5
	Composite (d)	Composite	31 days	H-3	1E-5
				Gross Alpha	1E-7
			92 days	Sr-89, Sr-90	5E-8
				Fe-55	1E-6
3. Service Water (in Radiologically Controlled Areas)	Grab Sample	31 days	31 days	Gamma and Beta emitters (j)	Per liquid batch releases, above.
4. Turbine Hall Drains, SG Feedwater (i)	Composite (d)	Composite	7 days	Gamma and Beta emitters (j)	Per liquid batch releases, above.

Table D 3.1.1-1 (Page 2 of 2)
Radioactive Liquid Waste Sampling and Analysis

(a) The LLD is defined as the smallest concentration of radioactive material in a sample that will yield a net count, above system background, that will be detected with 95% probability with only 5% probability of falsely concluding that a blank observation represents a "real" signal. The LLD shall be determined in accordance with the methodology and parameters in the ODCM. It should be recognized that the LLD is defined as an a priori (before-the-fact) limit representing the capability of a measurement system and not as an a posterior (after-the-fact) limit for a particular measurement.

(b) A batch release is the discharge of liquid wastes of a discrete volume. Prior to sampling for analyses, each batch shall be isolated, and then thoroughly mixed by the method described in Part II, Section 1.4 to assure representative sampling.

(c) The principal gamma emitters for which the LLD applies include the following radionuclides: Mn-54, Fe-59, Co-58, Co-60, Zn-65, Mo-99, Cs-134, Cs-137, and Ce-141. Ce-144 shall also be measured, but with an LLD of 5×10^{-6} μCi/ml. This list does not mean that only these nuclides are to be considered. Other gamma peaks that are identified, together with those of the above nuclides, shall also be analyzed and reported in the Radioactive Effluent Release Report pursuant to Specification D 5.2.

(d) A composite sample is one in which the quantity of liquid sampled is proportional to the quantity of liquid waste discharged and in which the method of sampling employed results in a specimen that is representative of the liquids released.

(e) A continuous release is the discharge of liquid wastes of a nondiscrete volume, e.g., from a volume of a system that has an input flow during the continuous release.

(f) When operational or other limitations preclude specific gamma radionuclide analysis in batch releases, the provisions of Regulatory Guide 1.21 (Revision 1), Appendix A Section C.4 and Appendix A, Section B shall be followed.

(g) For certain radionuclides with low gamma yield or low energies, or for certain radionuclide mixtures, it may not be possible to measure radionuclides in concentration near the LLD. Under these circumstances, the LLD may be increased in inverse proportion to the magnitude of the gamma yield (i.e., $5 \times 10^{-7}/I$ where I is the photon abundance expressed as a decimal fraction).

(h) Complete prior to each release.

(i) Steam Generator Feedwater and Turbine Hall Drains are adequately monitored from Steam Generator Blowdown Composites. Increased monitoring need only be performed when a Primary to Secondary leak exists, as defined in RECS Section D.1.1.

(j) Beta emitters need only be analyzed if gamma emitters have been positively identified.

D 3.1 RADIOACTIVE LIQUID EFFLUENTS

D 3.1.2 Liquid Effluents Dose

DLCO 3.1.2 The dose or dose commitment to a MEMBER OF THE PUBLIC from radioactive materials released in liquid effluents from each unit to UNRESTRICTED AREAS (Figure D 4.1-1) shall be limited to:

a. ≤ 1.5 mrem to the whole body and ≤ 5 mrem to any organ during any calendar quarter; and

b. ≤ 3 mrem to the whole body and ≤ 10 mrem to any organ during any calendar year.

APPLICABILITY: At all times.

ACTIONS

CONDITION	REQUIRED ACTION	COMPLETION TIME
A. Calculated dose to a MEMBER OF THE PUBLIC from the release of radioactive materials in liquid effluents to UNRESTRICTED AREAS exceeds limits.	A.1 Prepare and submit to the NRC, pursuant to D 5.3, a Special Report that (1) Identifies the cause(s) for exceeding the limit(s) and (2) Defines the corrective actions that have been taken to reduce the releases and the proposed corrective actions to be taken to assure that subsequent releases will be in compliance with DLCO 3.1.2.	30 days

ACTIONS (continued)

CONDITION	REQUIRED ACTION	COMPLETION TIME
B. Calculated dose to a MEMBER OF THE PUBLIC from the release of radioactive materials in liquid effluents exceeds 2 times the limits.	B.1 Calculate the annual dose to a MEMBER OF THE PUBLIC which includes contributions from direct radiation from the units (including outside storage tanks, etc.).	Immediately
	AND	
	B.2 Verify that the limits of DLCO 3.4 have not been exceeded.	Immediately
C. Required Action B.2 and Associated Completion time not met.	C.1 Prepare and submit to the NRC, pursuant to D 5.3, a Special Report, as defined in 10 CFR 20.2203 (a)(4), of Required Action A.1 shall also include the following: (1) The corrective action(s) to be taken to prevent recurrence of exceeding the limits of DLCO 3.4 and the schedule for achieving conformance, (2) An analysis that estimates the dose to a MEMBER OF THE PUBLIC from uranium fuel cycle sources, including all effluent pathways and direct radiation, for the calendar year that includes the release(s), and (3) Describes the levels of radiation and concentrations of radioactive material involved and the cause of the exposure levels or concentrations.	30 days

SURVEILLANCE REQUIREMENTS

SURVEILLANCE		FREQUENCY
DSR 3.1.2.1	Determine cumulative dose contributions from liquid effluents for the current calendar quarter and the current calendar year.	31 days

D 3.1 RADIOACTIVE LIQUID EFFLUENTS

D 3.1.3 Liquid Radwaste Treatment System

DLCO 3.1.3 The Liquid Radwaste Treatment System shall be in operation when projected liquid effluent doses, from each unit, to UNRESTRICTED AREAS (Figure D 4.1-1) would be:

a. > 0.06 mrem to the total body in a 31 day period; or

b. >0.2 mrem to any organ in a 31 day period.

APPLICABILITY: Prior to each release.

ACTIONS

CONDITION	REQUIRED ACTION	COMPLETION TIME
A. Radioactive liquid waste being discharged without treatment. <u>AND</u> Projected doses due to the liquid effluent, from the unit, to UNRESTRICTED AREAS would exceed limits.	A.1 Prepare and submit to the NRC, pursuant to D 5.3, a Special Report that includes: (1) An explanation of why liquid radwaste was being discharged without treatment, identification of any inoperable equipment or subsystems, and the reason for the inoperability, (2) Action(s) taken to restore the inoperable equipment to OPERABLE status, and (3) Summary description of action(s) taken to prevent a recurrence.	30 days

SURVEILLANCE REQUIREMENTS

SURVEILLANCE		FREQUENCY
DSR 3.1.3.1	Project the doses due to liquid effluents from each unit to UNRESTRICTED AREAS.	31 days

D 3.1 LIQUID EFFLUENTS

D 3.1.4 Liquid Holdup Tanks

DLCO 3.1.4 Radioactive liquid contained in unprotected outdoor liquid storage tanks shall be limited to ≤ 10 Curies, excluding tritium and dissolved or entrained gases.

APPLICABILITY: At all times.

ACTIONS

CONDITION	REQUIRED ACTION	COMPLETION TIME
A. Level of radioactivity exceeds the limits in any listed tank: *U2 & U3 PWSTs* *U2 & U3 RWSTs* *U1 Waste Dist Storage Tanks* *U3 Monitor Tanks* *U3 CPF High/Low TDS Tanks* *Outdoor Temporary Tanks*	A.1 Suspend addition of radioactive material. <u>AND</u> A.2 Initiate measures to reduce content to within the limits. <u>AND</u> A.3 Describe the events leading to the condition in the Radioactive Effluent Release Report.	Immediately 48 hours Prior to submittal of next Radioactive Effluent Release Report

SURVEILLANCE REQUIREMENTS

SURVEILLANCE		FREQUENCY
DSR 3.1.4.1	Determine that the quantity of radioactivity in outdoor liquid unprotected tanks (listed above) does not exceed the limit.	31 days, during periods where radioactive liquid is being added to the tanks, in accordance with the methodology and parameters of the ODCM

D 3.2 RADIOACTIVE GASEOUS EFFLUENTS

D 3.2.1 Gaseous Effluents Dose Rate

DLCO 3.2.1 The dose rate from radioactive materials released in gaseous effluents from the site to areas at or beyond the SITE BOUNDARY (Figure D 4.1-1) shall be limited to:

a. For noble gases, ≤ 500 mrem/yr to the whole body and ≤ 3000 mrem/yr to the skin and

b. For I-131, tritium (H-3) and all radionuclides in particulate form with half-lives > 8 days, ≤ 1500 mrem/yr to any organ.

APPLICABILITY: At all times.

ACTIONS

CONDITION	REQUIRED ACTION	COMPLETION TIME
A. The dose rate(s) at or beyond the SITE BOUNDARY due to radioactive gaseous effluents exceeds limits.	A.1 Restore the release rate to within the limit.	Immediately

SURVEILLANCE REQUIREMENTS

SURVEILLANCE		FREQUENCY
DSR 3.2.1.1	The dose rate from noble gases in gaseous effluents shall be determined to be within the limits of DLCO 3.2.1.a.	In accordance with Table D 3.2.1-1
DSR 3.2.1.2	The dose rate from I-131, H-3 and all radionuclides in particulate form with half-lives > 8 days in gaseous effluents shall be determined to be within the limits of DLCO 3.2.1.b.	In accordance with Table D 3.2.1-1

Table D 3.2.1-1 (Page 1 of 2)
Radioactive Gaseous Waste Sampling and Analysis

GASEOUS RELEASE TYPE		SAMPLE TYPE	SAMPLE FREQUENCY	ANALYSIS FREQUENCY	SAMPLE ANALYSIS	SAMPLE LOWER LIMIT OF DETECTION (LLD) (a)
1. Waste Gas Storage Tank		Grab Sample	Each Tank (h)	Each Tank (h)	Principal Noble Gas (NG) Gamma Emitters (b)	1E-4 µCi/cc
2. Vapor Containment	Purge	Grab Sample	Each Purge (h)	Each Purge (h)	Principal NG Gamma Emitters (b)	1E-4 µCi/cc
	Press Relief	Grab Sample	31 days (i)	31 days (i)	Principal NG Gamma Emitters (b)	1E-4 µCi/cc
3. Condenser Air Ejector		Grab Sample	31 days	31 days	Principal NG Gamma Emitters (b)	1E-4 µCi/cc
4. Continuous Ventilation: a. Main Plant Vent (unit 2) b. Stack Vent (unit 1) c. Main Plant Vent (unit 3) d. Radioactive Machine Shop Vent (unit 3) e. Admin Bldg Vent (unit 3)		Grab Sample	31 days (c)	31 days (c)	Principal NG Gamma Emitters (b)	1E-4 µCi/cc
		H-3 Specific	Continuous	31 days (e)	H-3	1E-6 µCi/cc
		Charcoal Sample	Continuous (f)	7 days (c), (g)	I-131	1E-12 µCi/cc
		Particulate Sample	Continuous (f)	7 days (c), (g)	Principal Gamma Emitters (b) (I-131, Others)	1E-11 µCi/cc
		Composite Particulate Sample	Continuous (f)	31 days	Gross Alpha	1E-11 µCi/cc
		Composite Particulate Sample	Continuous (f)	92 days	Sr-89 / Sr-90	1E-11 µCi/cc
		Noble Gas Monitor	Continuous (f)	Continuous (f)	Noble Gases Gross Beta or Gamma	1E-6 µCi/cc (d)

Table D 3.2.1-1 (Page 2 of 2)
Radioactive Gaseous Waste Sampling and Analysis

(a) The LLD is defined, for purposes of these Specifications, as the smallest concentration of radioactive material in a sample that will yield a net count, above system background, that will be detected with 95% probability with only 5% probability of falsely concluding that a blank observation represents a "real" signal. The LLD shall be determined in accordance with the methodology and parameters in the ODCM.

It should be recognized that the LLD is defined as an a priori (before the fact) limit representing the capability of a measurement system and not as an a posteriori (after the fact) limit for a particular measurement.

(b) *The principal gamma emitters for which the LLD Control applies exclusively are the following radionuclides:* Kr-87, Kr-88, Xe-133, Xe-133m, Xe-135, and Xe-138 for gaseous emissions and Mn-54, Fe-59, Co-58, Co-60, Zn-65, Mo-99, Cs-134, Cs-137, Ce-141 and Ce-144 for particulate emissions. Other identifiable gamma peaks (I-131 in particulate form, for example), together with those of the above nuclides, shall also be analyzed and reported in the Annual Radioactive Effluent Release Report pursuant to Section D 5.2.

(c) IF following a shutdown, startup, or a thermal power change (within one hour) exceeding 15 percent of RATED THERMAL POWER, analysis shows that the DOSE EQUIVALENT I-131 concentration in the primary coolant has increased by a factor of 3 or more, AND the noble gas monitor shows that effluent activity has increased by a factor of 3 or more THEN:

1) Sample the main Plant Vent for Noble Gases within 24 hours, AND

2) Sample the main Plant Vent for Iodine and Particulate once per 24 hours for at least 7 days with analyses completed within 48 hours of sample changeout. The LLDs of these samples may be increased by a factor of 10.

(d) This value is the established Radiation Monitor sensitivity (minimum).

(e) Grab samples can be used as alternative to continuous sampling, provided the periodicity of these grab samples is increased from monthly to once per 24 hours when the refueling canal is flooded, or at least once per 7 days when spent fuel is in the Spent Fuel Pool.

(f) The ratio of the sample flow rate to the sampled stream flow rate shall be known for the time period covered by each dose or dose rate calculation made in accordance with Specifications D 3.2.1, D 3.2.2 and D 3.2.3.

(g) Continuous samples shall be changed at least once per 7 days and analyses shall be completed within 48 hours after changing, or after removal from sampler.

Additionally, IF routine Iodine sampling indicates I-131 in any of the listed continuous streams, THEN *collect a 24 hour sample from the applicable vent (within 48 hours) for short-lived Iodine isotope* quantification, on a periodicity not to exceed once per 31 days. The LLDs of these samples may be increased by a factor of 10.

(h) Complete prior to each release.

(i) Vapor Containment noble gas shall be sampled at least monthly to ensure Pressure Reliefs are quantified with an accurate isotopic mixture. Containment noble gas radiation monitor readings can be used for quantification of Pressure Reliefs, provided the monitor readings are consistent with those observed during recent (at least monthly) grab samples. Sample data is adjusted by the noble gas radiation monitor reading for purposes of *quantification of each release. Should the monitor be inoperable, a containment noble gas grab sample is* required within 24 hours prior to the Pressure Relief. Should BOTH the containment noble gas and particulate monitors be inoperable, two independent samples of the VC are required prior to a Pressure Relief.

D 3.2 RADIOACTIVE GASEOUS EFFLUENTS

D 3.2.2 Gaseous Effluent Dose - Noble Gas

DLCO 3.2.2 The air dose from noble gases released in gaseous effluents from each unit to areas at or beyond the SITE BOUNDARY (Figure D 4.1-1) shall be limited to:

a. ≤ 5 mrad to the whole body from gamma radiation and
≤ 10 mrad to the skin from beta radiation during any calendar quarter,

and

b. ≤ 10 mrad to the whole body from gamma radiation and
≤ 20 mrad to the skin from beta radiation during any calendar year.

APPLICABILITY: At all times.

ACTIONS

CONDITION	REQUIRED ACTION	COMPLETION TIME
A. The calculated air dose at or beyond the SITE BOUNDARY due to noble gases released in gaseous effluents exceeds limits.	A.1 Prepare and submit to the NRC, pursuant to D 5.3, a Special Report that (1) Identifies the cause(s) for exceeding the limit(s) and (2) Defines the corrective actions that have been taken to reduce the releases and the proposed corrective actions to be taken to assure that subsequent releases will be in compliance with DLCO 3.2.2.	30 days

ACTIONS (continued)

CONDITION	REQUIRED ACTION	COMPLETION TIME
B. Calculated dose to a MEMBER OF THE PUBLIC from the release of radioactive materials in airborne effluents exceeds 2 times the limits.	B.1 Calculate the annual dose to a MEMBER OF THE PUBLIC which includes contributions from direct radiation from the units (including outside storage tanks, etc.).	Immediately
	AND	
	B.2 Verify that the limits of DLCO 3.4 have not been exceeded.	Immediately
C. Required Action B.2 and Associated Completion time not met.	C.1 Prepare and submit to the NRC, pursuant to D 5.3, a Special Report, as defined in 10 CFR 20.2203 (a)(4), of Required Action A.1 shall also include the following: (1) The corrective action(s) to be taken to prevent recurrence of exceeding the limits of DLCO 3.4 and the schedule for achieving conformance, (2) An analysis that estimates the dose to a MEMBER OF THE PUBLIC from uranium fuel cycle sources, including all effluent pathways and direct radiation, for the calendar year that includes the release(s), and (3) Describes the levels of radiation and concentrations of radioactive material involved and the cause of the exposure levels or concentrations.	30 days

SURVEILLANCE REQUIREMENTS

SURVEILLANCE		FREQUENCY
DSR 3.2.2.1	Determine cumulative dose contributions for the current calendar quarter and current calendar year.	31 days

D 3.2 RADIOACTIVE GASEOUS EFFLUENTS

D 3.2.3 Gaseous Effluent Dose – Iodine and Particulate

DLCO 3.2.3 The dose to a MEMBER OF THE PUBLIC from I-131, tritium, and all radionuclides in particulate form with half-lives > 8 days, in gaseous effluents, released from each unit to areas at or beyond the SITE BOUNDARY (Figure D 4.1-1) shall be limited to:

a. ≤ 7.5 mrem to any organ during any calendar quarter, and

b. ≤ 15 mrem to any organ during any calendar year.

APPLICABILITY: At all times.

ACTIONS

CONDITION	REQUIRED ACTION	COMPLETION TIME
A. The dose from I-131, tritium, and radioactive material in particulate form with half-lives > 8 days released in gaseous effluents at or beyond the SITE BOUNDARY exceeds limits.	A.1 Prepare and submit to the NRC, pursuant to D 5.3, a Special Report that (1) Identifies the cause(s) for exceeding the limit(s) and (2) Defines the corrective actions that have been taken to reduce the releases and the proposed corrective actions to be taken to assure that subsequent releases will be in compliance with DLCO 3.2.3.	30 days

ACTIONS (continued)

CONDITION	REQUIRED ACTION	COMPLETION TIME
B. Calculated dose to a MEMBER OF THE PUBLIC from the release of radioactive materials in liquid effluents exceeds 2 times the limits.	B.1 Calculate the annual dose to a MEMBER OF THE PUBLIC which includes contributions from direct radiation from the units (including outside storage tanks, etc.).	Immediately
	AND	
	B.2 Verify that the limits of DLCO 3.4 have not been exceeded.	Immediately
C. Required Action B.2 and Associated Completion time not met.	C.1 Prepare and submit to the NRC, pursuant to D 5.3, a Special Report, as defined in 10 CFR 20.2203 (a)(4), of Required Action A.1 shall also include the following: (1) The corrective action(s) to be taken to prevent recurrence of exceeding the limits of DLCO 3.4 and the schedule for achieving conformance, (2) An analysis that estimates the dose to a MEMBER OF THE PUBLIC from uranium fuel cycle sources, including all effluent pathways and direct radiation, for the calendar year that includes the release(s), and (3) Describes the levels of radiation and concentrations of radioactive material involved and the cause of the exposure levels or concentrations.	30 days

SURVEILLANCE REQUIREMENTS

SURVEILLANCE		FREQUENCY
DSR 3.2.3.1	Determine cumulative dose contributions for the current calendar quarter and current calendar year for I-131, tritium, and radioactive material in particulate form with half-lives > 8 days.	31 days

D 3.2 RADIOACTIVE GASEOUS EFFLUENTS

D 3.2.4 Gaseous Radwaste Treatment System

DLCO 3.2.4 The GASEOUS RADWASTE TREATMENT SYSTEM shall be in operation when projected gaseous effluent doses, from each unit, at and beyond the SITE BOUNDARY (Figure D 4.1-1) would be:

a. > 0.2 mrad for gamma radiation; and

b. > 0.4 mrad for beta radiation in a 31 day period.

APPLICABILITY: Prior to each release.

ACTIONS

CONDITION	REQUIRED ACTION	COMPLETION TIME
A. Radioactive gaseous waste is being discharged without treatment. AND Projected doses due to the gaseous effluent, from the unit, at and beyond the SITE BOUNDARY would exceed limits.	A.1 Prepare and submit to the NRC, pursuant to D 5.3, a Special Report that includes the following: (1) Identification of any inoperable equipment or subsystems and the reason for the inoperability, (2) Action(s) taken to restore the inoperable equipment to OPERABLE status, and (3) Summary description of action(s) taken to prevent a recurrence.	30 days

SURVEILLANCE REQUIREMENTS

SURVEILLANCE		FREQUENCY
DSR 3.2.4.1	Project the doses due to gaseous effluents from each unit at and beyond the SITE BOUNDARY.	31 days

D 3.2 RADIOACTIVE GASEOUS EFFLUENTS

D 3.2.5 Ventilation Exhaust Treatment System

DLCO 3.2.5 The VENTILATION EXHAUST TREATMENT SYSTEM shall be in operation when projected gaseous effluent doses, from each unit, at and beyond the SITE BOUNDARY (Figure D 4.1-1) would be:

a. > 0.2 mrad air dose from gamma radiation; and
b. > 0.4 mrad air dose from beta radiation in a 31 day period; or
c. > 0.3 mrem to any organ in a 31 day period.

APPLICABILITY: Prior to each release.

ACTIONS

CONDITION	REQUIRED ACTION	COMPLETION TIME
A. Radioactive gaseous waste is being discharged without treatment. <u>AND</u> Projected doses due to gaseous effluent, from each unit, to areas at or beyond the SITE BOUNDARY would exceed limits.	A.1 Prepare and submit to the NRC, pursuant to D 5.3, a Special Report that includes the following: (1) Identification of any inoperable equipment or subsystems and the reason for the inoperability, (2) Action(s) taken to restore the inoperable equipment to OPERABLE status, and (3) Summary description of action(s) taken to prevent a recurrence.	30 days

SURVEILLANCE REQUIREMENTS

SURVEILLANCE		FREQUENCY
DSR 3.2.5.1	Project the doses from gaseous releases from each unit to areas at and beyond the SITE BOUNDARY when the GASEOUS RADWASTE TREATMENT SYSTEMS are not being fully utilized.	31 days

D 3.2 GASEOUS EFFLUENTS

D 3.2.6 Gas Storage Tanks

DLCO 3.2.6 The radioactivity contained in each gas storage tank shall be limited to the following unit-specific curie levels of noble gas (considered as Xe-133):

Unit 2: ≤ 29,761 Curies Unit 3: ≤ 50,000 Curies

APPLICABILITY: At all times.

ACTIONS

CONDITION	REQUIRED ACTION	COMPLETION TIME
A. Level of radioactivity exceeds the limits.	A.1 Suspend addition of radioactive material.	Immediately
	AND	
	A.2 Reduce content to within the limits.	48 hours

SURVEILLANCE REQUIREMENTS

SURVEILLANCE		FREQUENCY
DSR 3.2.6.1	The quantity of radioactive material contained in each gas storage tank shall be determined to be within the limits above, at least once per 24 hours when radioactive materials are being added to the tank in accordance with the methodology and parameters in the ODCM.	24 hours during addition of radioactive material to the tank

D 3.3 INSTRUMENTATION

D 3.3.1 Radioactive Liquid Effluent Monitoring Instrumentation

DLCO 3.3.1 The unit-specific radioactive liquid effluent monitoring instrumentation channels shown in Table D 3.3.1-1 shall be OPERABLE with:

a. The minimum OPERABLE channel(s) in service.

b. The alarm/trip setpoints set to ensure that the limits of DLCO 3.1.1 are not exceeded.

APPLICABILITY: According to Table D 3.3.1-1 for the applicable unit.

ACTIONS

---------- NOTE ----------
Separate condition entry is allowed for each channel.

CONDITION	REQUIRED ACTION	COMPLETION TIME
A. Liquid effluent monitoring instrumentation channel alarm/trip setpoint less conservative than required.	A.1 Suspend the release of radioactive liquid effluents monitored by the affected channel.	Immediately
	OR	
	A.2 Declare the channel inoperable.	Immediately
	OR	
	A.3 Change the setpoint so it is acceptably conservative.	Immediately

ACTIONS (continued)

CONDITION	REQUIRED ACTION	COMPLETION TIME
B. One or more required channels inoperable.	B.1 Enter the Condition referenced in Table D 3.3.1-1 for the channel.	Immediately
	AND	
	B.2 Restore inoperable channel(s) to OPERABLE status.	30 days
C. As required by Required Action B.1 and referenced in Table D 3.3.1-1.	C.1 Analyze at least 2 independent samples in accordance with Table D 3.1.1-1.	Prior to initiating a release
	AND	
	C.2 ----------NOTE---------- Verification Action will be performed by at least 2 separate technically qualified members of the facility staff. ---------- Independently verify the release rate calculations and discharge line valving.	Prior to initiating a release
D. As required by Required Action B.1 and referenced in Table D 3.3.1-1.	D.1 Collect and analyze grab samples for radioactivity at a limit of detection of at least 5×10^{-7} μCi/ml.	12 hours AND Once per 12 hours thereafter

ACTIONS (continued)

CONDITION	REQUIRED ACTION	COMPLETION TIME
E. As required by Required Action B.1 and referenced in Table D 3.3.1-1.	E.1 Collect and analyze grab samples for radioactivity at a limit of detection of at least 5×10^{-7} μCi/ml, when specific activity is > 0.01 μCi/gm DOSE EQUIVALENT I-131. OR E.2 Collect and analyze grab samples for radioactivity at a limit of detection of at least 5×10^{-7} μCi/ml, when specific activity is ≤ 0.01 μCi/gm DOSE EQUIVALENT I-131.	12 hours AND Once per 12 hours thereafter 24 hours AND Once per 24 hours thereafter
F. As required by Required Action B.1 and referenced in Table D 3.3.1-1.	F.1 ----------NOTE---------- Pump performance curves generated in place may be used to estimate flow. ---------- Estimate the flow rate during actual releases.	4 hours AND Once per 4 hours thereafter
G. As required by Required Action B.1 and referenced in Table D 3.3.1-1.	G.1 Estimate tank liquid level.	Immediately AND During liquid additions to the tank
H. Required Action B.2 and associated Completion Time not met.	H.1 Explain in the next Radioactive Effluent Release Report why the inoperability was not corrected in a timely manner.	In accordance with Radioactive Effluent Release Report

ACTIONS (continued)

CONDITION	REQUIRED ACTION	COMPLETION TIME
I. Required Action and associated Completion Time for Condition C, D, E, or F not met.	I.1 Suspend liquid effluent releases monitored by the inoperable channel(s).	Immediately
J. Required Action and associated Completion Time for Condition G not met.	J.1 Suspend liquid additions to the tank monitored by the inoperable channel(s).	Immediately

SURVEILLANCE REQUIREMENTS

----------NOTE----------
Refer to Table D 3.3.1-1 to determine which DSRs apply for each function.

SURVEILLANCE		FREQUENCY
DSR 3.3.1.1	Perform CHANNEL CHECK.	24 hours
DSR 3.3.1.2	Perform CHANNEL CHECK by verifying indication of flow during periods of release.	24 hours on any day on which continuous, periodic, or batch releases are made
DSR 3.3.1.3	Perform SOURCE CHECK.	Prior to release
DSR 3.3.1.4	Perform SOURCE CHECK.	31 days
DSR 3.3.1.5	Perform CHANNEL OPERATIONAL TEST	92 days

SURVEILLANCE REQUIREMENTS (continued)

SURVEILLANCE		FREQUENCY
DSR 3.3.1.6	Perform CHANNEL OPERATIONAL TEST. The CHANNEL OPERATIONAL TEST shall also demonstrate that automatic isolation of this pathway and control room alarm annunciation (or control panel indications/display) occurs if the instrument indicates measured levels above the alarm/trip setpoint	92 days
DSR 3.3.1.7	Perform CHANNEL OPERATIONAL TEST. The CHANNEL OPERATIONAL TEST shall also demonstrate control room alarm annunciation (or control panel indications/display) occurs if any of the following conditions exist, instrument indicates measured levels above the alarm setpoint, instrument controls not set in operate mode.	92 days
DSR 3.3.1.8	Perform CHANNEL OPERATIONAL TEST	24 months
DSR 3.3.1.9	Perform CHANNEL CALIBRATION	24 months

Table D 3.3.1-1 (page 1 of 3)
Radioactive Liquid Effluent Monitoring Instrumentation – Units 1, 2, and 3

INSTRUMENT	APPLICABILITY OR OTHER SPECIFIED CONDITIONS	REQUIRED CHANNELS PER INSTRUMENT	CONDITIONS REFERENCED FROM REQUIRED ACTION B.1	SURVEILLANCE REQUIREMENTS
1. **Gross Radioactivity Monitors Providing Alarm and Automatic Termination of Release**				
a. Unit 2 Liquid Radioactive Waste Effluent Line *(R-54)*	(a)	1	C	DSR 3.3.1.1 DSR 3.3.1.3 DSR 3.3.1.6 (e) DSR 3.3.1.9 (d)
b. Unit 2 Steam Generator Effluent Blowdown Line *(R-49)*	(a) (i)	1	E	DSR 3.3.1.1 DSR 3.3.1.4 DSR 3.3.1.6 (e) DSR 3.3.1.9 (d)
c. Unit 3 Liquid Radioactive Waste Effluent Line *(R-18)*	(a)	1	C	DSR 3.3.1.1 DSR 3.3.1.3 DSR 3.3.1.6 (e) DSR 3.3.1.9 (d)
d. Unit 3 Condensate Polisher Facility (CPF) Waste Line *(R-61)*	(a)	1	C	DSR 3.3.1.1 (h) DSR 3.3.1.4 (h) DSR 3.3.1.6 (e) DSR 3.3.1.9 (d)
e. Unit 3 Steam Generator Effluent Blowdown Line *(R-19)*	(a) (i)	1	E	DSR 3.3.1.1 DSR 3.3.1.4 DSR 3.3.1.6 (e) DSR 3.3.1.9 (d)
2. **Gross Beta or Gamma Radioactivity Monitors Providing Alarm but NOT Providing Automatic Termination of Release**				
a. Unit 1 or 2 Service Water or River Water Effluent Lines - VC FCU *(R-46 or R-53)* - 21 CCW HX *(R-39)* - 22 CCW HX *(R-40)* - SBBPS HX *(R-52)*	(a)	1 (g)	D	DSR 3.3.1.1 DSR 3.3.1.4 DSR 3.3.1.7 (e) DSR 3.3.1.9 (d)
b. Unit 1 Secondary Boiler Blowdown Effluent Line *(R-51)*	(a)	1	D	DSR 3.3.1.1 DSR 3.3.1.4 DSR 3.3.1.7 (e) DSR 3.3.1.9 (d)
c. Unit 1 Sphere Foundation Drain Sump Effluent Line *(R-62)*	(a)	1	D	DSR 3.3.1.1 DSR 3.3.1.4 DSR 3.3.1.7 (e) DSR 3.3.1.9 (d)
d. Unit 3 Service Water Effluent Lines - SW for VC FCU return *(R-16A or R-16B)*	(a)	1 (g)	D	DSR 3.3.1.1 DSR 3.3.1.4 DSR 3.3.1.7 (e) DSR 3.3.1.9 (d)
- SW for CCW Heat Exchanger *(R-23)*	(a)	1	D	DSR 3.3.1.1 DSR 3.3.1.4 DSR 3.3.1.7 (e) DSR 3.3.1.9 (d)

Table D 3.3.1-1 (page 2 of 3)
Radioactive Liquid Effluent Monitoring Instrumentation – Units 1, 2, and 3

INSTRUMENT	APPLICABILITY OR OTHER SPECIFIED CONDITIONS	REQUIRED CHANNELS PER INSTRUMENT	CONDITIONS REFERENCED FROM REQUIRED ACTION B.1	SURVEILLANCE REQUIREMENTS
3. **Flow Rate Measurement Devices**				
a. Unit 2 Liquid Radwaste Effluent Line *(CT971-FRE, CT971-FIE)*	(a)	1	F	DSR 3.3.1.2 DSR 3.3.1.5 DSR 3.3.1.9
b. Unit 2 Steam Generator Blowdown Effluent Line *(FI-1241 to FI-1244, and FT-1241 to FT-1244)*	(a) (i)	1	F	DSR 3.3.1.2 DSR 3.3.1.5 DSR 3.3.1.9
c. Unit 1 North Curtain Drain Effluent Line (f) *(LW-FE-12)*	(a)	1	F	DSR 3.3.1.2 DSR 3.3.1.9
d. Unit 1 Sphere Foundation Drain Sump (f) *(FR-7874)*	(a)	1	F	DSR 3.3.1.2 DSR 3.3.1.9 6/09
e. Unit 3 Liquid Radwaste Effluent Line *(FE-1064, FI-1064)*	(a)	1	F	DSR 3.3.1.2 DSR 3.3.1.5 DSR 3.3.1.9
f. Unit 3 Cond Polisher (CPF) Effluent Line *(3LG-FIT-41, (3LG-FM-41, 3LG-FR-41)*	(a)	1	F	DSR 3.3.1.2 DSR 3.3.1.5 DSR 3.3.1.9
g. Unit 3 Steam Generator Blowdown Effluent Line *(FT-545 to 548, FIR-543,544)*	(a) (i)	1	F	DSR 3.3.1.2 DSR 3.3.1.5 DSR 3.3.1.9
4. **Tank Level Indicating Devices** (c)				
a. Unit 1 Waste Distillate Storage Tank #13 *(CT967-LIE-1, LIE-2)*	(a)	1	G	DSR 3.3.1.1 (b) DSR 3.3.1.5 DSR 3.3.1.9
b. Unit 1 Waste Distillate Storage Tank #14 *(CT974-LIE-1, LIE-2)*	(a)	1	G	DSR 3.3.1.1 (b) DSR 3.3.1.5 DSR 3.3.1.9
c. Unit 2 Primary Water Storage Tank *(LT-1131, LI-1131)*	(a)	1	G	DSR 3.3.1.1 (b) DSR 3.3.1.5 DSR 3.3.1.9
d. Unit 2 Refueling Water Storage Tank *(LI-920, LT-920, LT-5751)*	(a)	1	G	DSR 3.3.1.1 (b) (j)
e. Unit 3 Refueling Water Storage Tank *(LI-920A, LI-920B)*	(a)	1	G	DSR 3.3.1.1 (b) (j)

Table D 3.3.1-1 (page 3 of 3)
Radioactive Liquid Effluent Monitoring Instrumentation – Units 1, 2, and 3

INSTRUMENT	APPLICABILITY OR OTHER SPECIFIED CONDITIONS	REQUIRED CHANNELS PER INSTRUMENT	CONDITIONS REFERENCED FROM REQUIRED ACTION B.1	SURVEILLANCE REQUIREMENTS
4. **Tank Level Indicating Devices** (c)	(continued)			
f. Unit 3 Primary Water Storage Tank *(LT-1131, LI-1131)*	(a)	1	G	DSR 3.3.1.1 (b) DSR 3.3.1.8 DSR 3.3.1.9
g. Unit 3 Monitor Tank #31 *(LI-181)*	(a)	1	G	DSR 3.3.1.1 (b) DSR 3.3.1.8 DSR 3.3.1.9
h. Unit 3 Monitor Tank #32 *(LI-180)*	(a)	1	G	DSR 3.3.1.1 (b) DSR 3.3.1.8 DSR 3.3.1.9
i. Unit 3 CPF High Total Dissolved Solids Tank *(3-LG-LI-12)*	(a)	1	G	DSR 3.3.1.1 (b) DSR 3.3.1.8 DSR 3.3.1.9 (h)
j. Unit 3 CPF Low Total Dissolved Solids Tank *(3-LG-LI-22)*	(a)	1	G	DSR 3.3.1.1 (b) DSR 3.3.1.8 DSR 3.3.1.9 (h)

NOTES

(a) Applicability is defined as anytime releases are being performed via this pathway. During periods of release, channels shall be OPERABLE and in service on a continuous basis, except that outages are permitted, within the time frame of the specified action, for the purpose of maintenance and performance of required CHANNEL CHECK, SOURCE CHECK, CHANNEL CALIBRATION, or CHANNEL OPERATIONAL TEST.

(b) During liquid addition to the associated tank.

(c) Tanks included in this Specification are those outdoor tanks that are not surrounded by liners, dikes, or walls capable of holding the tank contents and do not have tank overflows and surrounding area drains connected to the liquid radwaste treatment system, as specified in RECS Section D 3.1.4.

(d) Radioactive calibration standards used for CHANNEL CALIBRATIONS shall be analyzed with instrumentation which is calibrated NIST traceable standards. Standards from suppliers who participate in approved measurement assurance activities with NIST are acceptable.

(e) Test will include: Low sample flow, no counts per minute failure, and alarm setpoint reached. The CHANNEL OPERATIONAL TEST does not include testing or trouble shooting, nor the performance of any equipment diagnostic capabilities provided with the monitor installation.

(f) Flow rate for these continuous intermittent release pathways is normally obtained from a flow totalizer on the system outlet.

(g) One instrument per operating Service Water system is required. For example, unit-specific VC FCU monitors are redundant and compensatory actions are only required when BOTH monitors are OOS for any one unit. However, for Unit 2's CCW HX's (R-39 and R-40), the appropriate SW monitor is required to be in service anytime the effected loop is in service.

(h) Channel and Source Checks for R-61 in Unit 3's Condensate Polisher Facility (CPF) are required only during or after a primary to secondary leak, as defined in RECS Section 1. Surveillances on the flow meter and level instruments are performed to be prepared for this type of leak. The level instrument calibration is also required by the SPDES permit.

(i) Applicable for Continuous Steam Generator Blowdown to the environment only. These requirements are not applicable for Batch Steam Generator Draindowns.

(j) Surveillance requirements for the RWST level instruments (CHECKS and CALIBRATIONS) are prescribed in Technical Specifications (Sections 3.3.3 and 3.5.4 for Unit 2 and Section 3.5.4 for Unit 3). However, the requirement for a daily channel check (when making additions to the tank, per earlier footnote b) is maintained in the ODCM per the original licensing bases (NUREG 0472) and the 10 curie rule.

D 3.3 INSTRUMENTATION

D 3.3.2 Radioactive Gaseous Effluent Monitoring Instrumentation

DLCO 3.3.2 The radioactive gaseous effluent monitoring instrumentation channels shown in Table D 3.3.2-1 shall be OPERABLE with:

a. The minimum OPERABLE channel(s) in service.

b. The alarm/trip setpoints set to ensure that the limits of DLCO 3.2.1 are not exceeded.

APPLICABILITY: According to Table D 3.3.2-1.

ACTIONS

---------- NOTE ----------
Separate condition entry is allowed for each channel.

CONDITION	REQUIRED ACTION	COMPLETION TIME
A. Gaseous effluent monitoring instrumentation channel alarm/trip setpoint less conservative than required.	A.1 Suspend the release of radioactive gaseous effluents monitored by the affected channel.	Immediately
	OR	
	A.2 Declare the channel inoperable.	Immediately
	OR	
	A.3 Change the setpoint so it is acceptably conservative.	Immediately
B. One or more channels inoperable.	B.1 Enter the Condition referenced in Table D 3.3.2-1 for the channel.	Immediately
	AND	
	B.2 Restore inoperable channel(s) to OPERABLE status.	30 days

ACTIONS (continued)

CONDITION	REQUIRED ACTION	COMPLETION TIME
C. As required by Required Action B.1 and referenced in Table D 3.3.2-1.	C.1 Take grab samples.	12 hours AND Once per 12 hours thereafter
	AND C.2 Analyze samples for gross activity.	24 hours from time of sampling completion
D. As required by Required Action B.1 and referenced in Table D 3.3.2-1.	D.1 Estimate the flow rate for the inoperable channel(s).	4 hours AND Once per 4 hours thereafter
E. As required by Required Action B.1 and referenced in Table D 3.3.2-1.	E.1 Continuously collect samples using auxiliary sampling equipment as required in Table D 3.2.1-1.	8 hours
F. As required by Required Action B.1 and referenced in Table D 3.3.2-1.	F.1 Determine the radioactive content of the receiving gas decay tank is in compliance with DLCO 3.2.1.	24 hours AND Once per 24 hours thereafter

ACTIONS (continued)

CONDITION	REQUIRED ACTION	COMPLETION TIME
G. As required by Required Action B.1 and referenced in Table D 3.3.2-1, for gas decay tank releases.	G.1 Analyze at least 2 independent samples in accordance with Table D 3.2.1-1. AND G.2 ----------NOTE---------- Verification Action will be performed by at least 2 separate technically qualified members of the facility staff. ---------- Independently verify the release rate calculations and discharge line valving.	Prior to initiating a gas decay tank release Prior to initiating a gas decay tank release
H. Required Action B.2 and associated Completion Time not met.	H.1 Explain in the next Radioactive Effluent Release Report why the inoperability was not corrected in a timely manner.	In accordance with Radioactive Effluent Release Report frequency
I. Required Action and associated Completion Time for Condition C, D, E or F not met.	I.1 Suspend gaseous effluent releases monitored by the inoperable channel(s).	Immediately
J. Required Action and associated Completion Time for Condition G not met.	J.1 Suspend gaseous effluent releases from Waste Gas Holdup System.	Immediately
K. As required by Required Action B.1 and referenced in Table D 3.3.2-1 (in MODES 1-4 only).	K.1 Take Noble Gas grab samples and analyze for gross activity. K.2 Immediately suspend PURGING the VC.	Prior to venting Vapor Containment (VC)

SURVEILLANCE REQUIREMENTS

SURVEILLANCE		FREQUENCY
DSR 3.3.2.1	Perform CHANNEL CHECK.	24 hours
DSR 3.3.2.2	Perform CHANNEL CHECK.	7 days
DSR 3.3.2.3	Perform SOURCE CHECK.	Prior to release
DSR 3.3.2.4	Perform SOURCE CHECK.	31 days
DSR 3.3.2.5	Perform CHANNEL OPERATIONAL TEST. The test shall include 1) low sample flow, 2) no counts per minute failure, 3) a demonstration of the automatic isolation capability of this pathway and that control room alarm annunciation (or control panel indications/display) occurs if the instrument indicates measured levels above the alarm/trip setpoint. This test does NOT include testing of troubleshooting and equipment diagnostic capabilities provided with the monitor installation.	92 days
DSR 3.3.2.6	Perform CHANNEL OPERATIONAL TEST. The test shall include 1) low sample flow (except for Condenser Air Ejector monitors), 2) no counts per minute failure, 3) a demonstration that control room alarm annunciation (or control panel indications or display) occurs if the instrument indicates measured levels above the alarm setpoint, or the instrument controls are not set in operate mode. This test does NOT include testing of troubleshooting and equipment diagnostic capabilities provided with the monitor installation.	92 days
DSR 3.3.2.7	Perform CHANNEL CALIBRATION.	24 months

Table D 3.3.2-1 (page 1 of 4)
Radioactive Gaseous Effluent Monitoring Instrumentation – Units 1, 2, and 3

INSTRUMENT and APPLICABLE UNIT (1, 2, or 3)	APPLICABILITY OR OTHER SPECIFIED CONDITIONS	REQUIRED CHANNELS PER INSTRUMENT	CONDITIONS REFERENCED FROM REQUIRED ACTION B.1	SURVEILLANCE REQUIREMENTS
1. Waste Gas Holdup System				
a. Unit 2 Noble Gas Monitor, providing Alarm, *(R-50)*	(b)	1	F	DSR 3.3.2.1 DSR 3.3.2.4 DSR 3.3.2.6 DSR 3.3.2.7 (c)
b. Unit 3 Noble Gas Monitor, providing Alarm, *(R-20)*	(b)	1	F	DSR 3.3.2.1 DSR 3.3.2.4 DSR 3.3.2.6 DSR 3.3.2.7 (c)
2. Condenser Air Evacuation System				
a. Unit 2 Noble Gas Activity, *(R-45)*	(a)	1	C	DSR 3.3.2.1 DSR 3.3.2.4 DSR 3.3.2.6 (d) DSR 3.3.2.7 (c)
b. Unit 3 Noble Gas Activity, *(R-15)*	(a)	1	C	DSR 3.3.2.1 DSR 3.3.2.4 DSR 3.3.2.6 (d) DSR 3.3.2.7 (c)
3. Vapor Containment Atmosphere				
a. Unit 2 Noble Gas Activity Monitor, providing ALARM and automatic termination of release *(R-42)*	(a)	1	K	DSR 3.3.2.4 (g)
b. Unit 3 Noble Gas Activity Monitor, providing ALARM and automatic termination of release *(R-12)*	(a)	1	K	DSR 3.3.2.4 (g)

Table D 3.3.2-1 (page 2 of 4)
Radioactive Gaseous Effluent Monitoring Instrumentation – Units 1, 2, and 3

INSTRUMENT and APPLICABLE UNIT (1, 2, or 3)	APPLICABILITY OR OTHER SPECIFIED CONDITIONS	REQUIRED CHANNELS PER INSTRUMENT	CONDITIONS REFERENCED FROM REQUIRED ACTION B.1	SURVEILLANCE REQUIREMENTS
4. **Unit 2 Main Plant Vent**				
Radiation Monitor:				
a. Noble Gas Monitor *(R-44)*	(a) & (b)	1	C & G	DSR 3.3.2.1 DSR 3.3.2.4 DSR 3.3.2.5 DSR 3.3.2.7 (c)
Other Monitoring Equipment:				
b. Iodine Sampler	(a)	1	E	DSR 3.3.2.2
c. Particulate Sampler	(a)	1	E	DSR 3.3.2.2
d. Process Flow-Rate Monitor *(SV2-DPT, SV2-1-DPT, SV2-DPI)*	(a)	1	D	DSR 3.3.2.1 DSR 3.3.2.7
e. Sample Flow-Rate Monitor *(Chem Totalizer)*	(a)	1	D	DSR 3.3.2.1 DSR 3.3.2.7
5. **Unit 3 Main Plant Vent**				
Radiation Monitor:				
a. Noble Gas Monitor(s) *(R-14 or R-27)*	(a) & (b)	1	C & G	DSR 3.3.2.1 DSR 3.3.2.4 DSR 3.3.2.5 DSR 3.3.2.7 (c)
Other Monitoring Equipment:				
b. Iodine Sampler	(a)	1	E	DSR 3.3.2.2
c. Particulate Sampler	(a)	1	E	DSR 3.3.2.2
d. Process Flow-Rate Monitor *(from R-27's Kurz probes and RM80 processing computer)*	(a)	1	D	DSR 3.3.2.1 DSR 3.3.2.7
e. Sample Flow-Rate Monitor *(Chem Totalizer)*	(a)	1	D	DSR 3.3.2.1 DSR 3.3.2.7

Table D 3.3.2-1 (page 3 of 4)
Radioactive Gaseous Effluent Monitoring Instrumentation – Units 1, 2, and 3

INSTRUMENT and APPLICABLE UNIT (1, 2, or 3)	APPLICABILITY OR OTHER SPECIFIED CONDITIONS	REQUIRED CHANNELS PER INSTRUMENT	CONDITIONS REFERENCED FROM REQUIRED ACTION B.1	SURVEILLANCE REQUIREMENTS
6. **Unit 1 Stack Vent**				
Radiation Monitor:				
a. Noble Gas Monitor *(R-60)*	(a)	1	C	DSR 3.3.2.1 DSR 3.3.2.4 DSR 3.3.2.6 DSR 3.3.2.7 (c)
Other Monitoring Equipment:				
b. Iodine Sampler	(a)	1	E	DSR 3.3.2.2
c. Particulate Sampler	(a)	1	E	DSR 3.3.2.2
d. Process Flow-Rate Monitor *(SV1-DPT, SV1-FR)*	(a)	1	D	DSR 3.3.2.1 DSR 3.3.2.7
e. Sample Flow-Rate Monitor *(Chem Totalizer)*	(a)	1	D	DSR 3.3.2.1 DSR 3.3.2.7
7. **Unit 3 Radioactive Machine Shop (RAMS) Vent**				
Radiation Monitor:				
a. Noble Gas Monitor *(R-59)*	(a)	1	C	DSR 3.3.2.1 DSR 3.3.2.4 DSR 3.3.2.6 DSR 3.3.2.7 (c)
Other Monitoring Equipment:				
b. Iodine Sampler	(a)	1	E	DSR 3.3.2.2
c. Particulate Sampler	(a)	1	E	DSR 3.3.2.2
d. Process Flow-Rate Monitor *(from R-59's RM80 processor)*	(a)	1	D	DSR 3.3.2.1 DSR 3.3.2.7
e. Sample Flow-Rate Monitor *(Chem Totalizer)*	(a)	1	D	DSR 3.3.2.1 DSR 3.3.2.7

Table D 3.3.2-1 (page 4 of 4)
Radioactive Gaseous Effluent Monitoring Instrumentation – Units 1, 2, and 3

INSTRUMENT and APPLICABLE UNIT (1, 2, or 3)	APPLICABILITY OR OTHER SPECIFIED CONDITIONS	REQUIRED CHANNELS PER INSTRUMENT	CONDITIONS REFERENCED FROM REQUIRED ACTION B.1	SURVEILLANCE REQUIREMENTS
8. **Unit 3 Admin Bldg Vent** (f)				
Radiation Monitor:				
a. Noble Gas Monitor *(R-46)*	(a)	1	C	DSR 3.3.2.1 DSR 3.3.2.4 DSR 3.3.2.6 DSR 3.3.2.7 (c)
Other Monitoring Equipment:				
b. Iodine Sampler	(a)	1	E	DSR 3.3.2.2
c. Particulate Sampler	(a)	1	E	DSR 3.3.2.2
d. Sample Flow-Rate Monitor *(Chem Totalizer)*	(a)	1	D	DSR 3.3.2.1 DSR 3.3.2.7

NOTES

(a) During release via this pathway. Channels shall be OPERABLE and in service on a continuous basis, except that outages are permitted, within the time frame of the specified action for the purpose of maintenance and performance of required CHANNEL CHECK, SOURCE CHECK, CHANNEL CALIBRATION, or CHANNEL OPERATIONAL TEST.

(b) During waste gas holdup system operation (treatment for primary system off-gases).

(c) Radioactive Calibration Standards used for channel calibrations shall be traceable to the National Institute of Standards and Technology (NIST) or an aliquot of calibration gas shall be analyzed with instrumentation which is calibrated with NIST traceable standards. Standards from suppliers who participate in measurement assurance activities with NIST are acceptable.

(d) The CHANNEL OPERATIONAL TEST for the Condenser Air Ejector monitors does NOT require a loss of sample flow test.

(e) The main Plant Vents for Units 2 and 3 monitors the Fuel Storage Building vents, in addition to ventilation from the Primary Auxiliary Buildings.

(f) The Unit 3 Admin Bldg Controlled Area ventilation system does NOT have an installed process flow meter. Default fan flow is used in lieu of a measurement , per ODCM Part II, Section 3.1.11.

(g) Most surveillance requirements for Vapor Containment monitors are located in Technical Specifications, Section 3.3.6. Source checks, however, are NOT required per Technical Specifications. Since these checks are valuable to ensure accurate quantification of VC Pressure Reliefs (as described below), a monthly source check requirement is listed here, in addition to the requirements of Technical Specifications.

Grab samples of the Vapor Containment atmosphere are routinely collected at least monthly and compared to the gas monitor for use in quantification of VC Pressure Reliefs (by scaling the monitor reading for each release to the reading obtained at time of grab sample). If the noble gas monitor is inoperable, a grab samples shall be taken and analyzed within 24 hours prior to performing a Pressure Relief. During containment building ventilation in Modes 5 or 6, continuous monitoring and automatic termination of release is not required. In this condition, one continuous monitor at the Plant Vent is sufficient.

D 3.4 RADIOACTIVE EFFLUENTS TOTAL DOSE

D 3.4.1 Radioactive Effluents Total Dose

DLCO 3.4.1 The annual (calendar year) dose or dose commitment to any MEMBER OF THE PUBLIC due to releases of radioactivity and to radiation from uranium fuel cycle sources shall be limited to ≤ 25 mrem to the whole body or any organ, except the thyroid, which shall be limited to ≤ 75 mrem.

APPLICABILITY: At all times.

ACTIONS

CONDITION	REQUIRED ACTION	COMPLETION TIME
A. Estimated dose or dose commitment due to direct radiation and the release of radioactive materials in liquid or gaseous effluents exceeds the limits.	A.1 Verify the condition resulting in doses exceeding these limits has been corrected.	Immediately
B. Required Action and associated Completion Time not met.	B.1 ----------NOTE---------- This is the Special Report required by D 3.1.2, D 3.2.2, or D 3.2.3 supplemented with the following. ----------	
	Submit a Special Report, pursuant to D 5.3, including a request for a variance in accordance with the provisions of 40 CFR 190. This submission is considered a timely request, and a variance is granted until staff action on the request is complete.	30 days

SURVEILLANCE REQUIREMENTS

SURVEILLANCE		FREQUENCY
DSR 3.4.1.1	Perform a cumulative dose calculation due to radioactive material in gaseous and liquid effluents to determine compliance with DLCO 3.4.1.	12 months

D 3.5 RADIOLOGICAL ENVIRONMENTAL MONITORING

D 3.5.1 Monitoring Program

DLCO 3.5.1 The Radiological Environmental Monitoring Program shall be conducted as specified in Table D 3.5.1-1.

APPLICABILITY: At all times.

ACTIONS

CONDITION	REQUIRED ACTION	COMPLETION TIME
A. Radiological Environmental Monitoring Program not conducted as specified in Table D 3.5.1-1.	A.1 Prepare and submit to the NRC in the Annual Radiological Environmental Operating Report, a description of the reasons for not conducting the program as required and the plans for preventing a recurrence.	In accordance with the Annual Radiological Environmental Operating Report frequency
B. Level of radioactivity in an environmental sampling medium at a specified location exceeds the reporting levels of Table D 3.5.1-2 when averaged over any calendar quarter. <u>OR</u>	B.1 ----------NOTES---------- 1. Only applicable if the radioactivity/radionuclides are the result of plant effluents. 2. For radionuclides other than those in Table D 3.5.1-2, this report shall indicate the methodology and parameters used to estimate the potential annual dose to a MEMBER OF THE PUBLIC. ----------	

ACTIONS (continued)

CONDITION	REQUIRED ACTION	COMPLETION TIME
More than one of the radionuclides in Table D 3.5.1-2 are detected in the environmental sampling medium and Concentration 1 + reporting level 1 concentration 2 + ... ≥ 1.0. reporting level 2 OR Radionuclides other than those in Table D 3.5.1-2 are detected in an environmental sampling medium at a specified location which are the result of plant effluents and the potential annual dose to a MEMBER OF THE PUBLIC from all radionuclides is ≥ the calendar year limits of Specifications D 3.1.2, D 3.2.2 or D 3.2.3.	Prepare and submit to the NRC, pursuant to D 5.3, a Special Report that (1) Identifies the cause(s) for exceeding the limit(s) and (2) Defines the corrective actions to be taken to reduce radioactive effluents so that the potential annual dose to a MEMBER OF THE PUBLIC is less than the calendar year limits of Specifications D 3.1.2, D 3.2.2, or D 3.2.3.	30 days
	OR	
	B.2 ----------NOTES---------- 1. Only applicable if the radioactivity/radionuclides are not the result of plant effluents. 2. For radionuclides other than those in Table D 3.5.1-2, this report shall indicate the methodology and parameters used to estimate the potential annual dose to a MEMBER OF THE PUBLIC. ---------- Report and describe the condition in the Annual Radiological Environmental Operating Report.	In accordance with the Annual Radiological Environmental Operating Report frequency

ACTIONS (continued)

CONDITION	REQUIRED ACTION	COMPLETION TIME
C. Milk or fresh leafy vegetation samples unavailable from one or more of the sample locations required by Table D 3.5.1-1.	C.1 Identify specific locations for obtaining replacement samples and add them to the Radiological Environmental Monitoring Program.	30 days
	AND	
	C.2 Delete the specific locations from which samples were unavailable from the Radiological Environmental Monitoring Program.	30 days
	AND	
	C.3 Pursuant to D 5.2, submit in the next Radioactive Effluent Release Report documentation for a change in the ODCM reflecting the new location(s) with supporting information identifying the cause of the unavailability of samples and justifying the selection of the new location(s) for obtaining samples.	In accordance with the Radioactive Effluent Release Report
D. Environmental samples required in Table D 3.5.1-1 are unobtainable due to sampling equipment malfunctions.	D.1 Ensure all efforts are made to complete corrective action(s).	Prior to the end of the next sampling period
	AND	
	D.2 Report all deviations from the sampling schedule in the Annual Radiological Environmental Operating Report.	In accordance with the Annual Radiological Environmental Operating Report

ACTIONS (continued)

CONDITION	REQUIRED ACTION	COMPLETION TIME
E. Samples required by Table D 3.5.1-1 not obtained in the media of choice, at the most desired location, or at the most desired time.	E.1 Choose suitable alternative media and locations for the pathway in question.	30 days
	AND	
	E.2 Make appropriate substitutions in the Radiological Environmental Monitoring Program.	30 days
	AND	
	E.3 Submit in the next Radioactive Effluent Release Report documentation for a change in the ODCM reflecting the new location(s) with supporting information identifying the cause of the unavailability of samples for that pathway and justifying the selection of the new location(s) for obtaining samples.	In accordance with the Radioactive Effluent Release Report

SURVEILLANCE REQUIREMENTS

SURVEILLANCE		FREQUENCY
DSR 3.5.1.1	Collect and analyze radiological environmental monitoring samples pursuant to the requirements of Table D 3.5.1-1 and the detection capabilities required by Table D 3.5.1-3.	In accordance with Table D 3.5.1-1

Table D 3.5.1-1 (page 1 of 3)
Radiological Environmental Monitoring Program

EXPOSURE PATHWAY AND/OR SAMPLE	NUMBER OF SAMPLES STATIONS	SAMPLE LOCATIONS (a)	SAMPLING AND COLLECTION FREQUENCY	TYPE AND FREQUENCY OF ANALYSIS
1. Direct Radiation	41 routine monitoring stations (b) (DR1-DR41)	(1) An inner ring of stations (DR1-DR16), one in each meteorological sector in the general area of the SITE BOUNDARY (2) An outer ring of stations (DR17-DR32), one in each meteorological sector in the 6 to 8 km range from the site (3) The balance of the stations (DR33-DR41), should be placed in special interest areas such as population centers, nearby residences, schools, and in one or two areas to serve as control stations	Quarterly	Gamma dose quarterly
2. Airborne Radioiodine and Particulates	5 locations (A1-A5)	(1) 3 samples (A1-A3) from locations close to the site boundary in different sectors, of the highest calculated annual average ground level D/Q (2) 1 sample (A4) from the vicinity of an established year-round community having the highest calculated annual average ground level D/Q (3) 1 sample (A5) from a control location, approximately 15-30 km distant, and in the least prevalent wind direction (c)	Continuous sampler operation with sample collection weekly or more frequently if required by dust loading	Radioiodine canister: Analyze weekly for I-131 Particulate sampler: (1) Analyze for gross beta radioactivity ≥ 24 hours following filter change (d). (2) Perform gamma isotopic analysis on each sample (e) in which gross beta activity is > 10 times the previous yearly mean of control samples. (3) Gamma isotopic analysis of composite sample (e) (by location) once per 3 months.
3. Waterborne				
a. Surface (f)	1 sample 1 sample	Upstream (Wa1) (used as a Control Station) Downstream (Wa2)	Composite sample over a one month period (g)	(1) Gamma isotopic analysis of each sample (e) once per month. (2) Composite and analyze for H-3 quarterly.
b. Drinking	1 sample	Nearest water supply (Wb1)	Grab sample: Monthly	(1) Gross beta and gamma isotopic analyses(e) of each sample monthly. (2) Composite and analyze for H-3 quarterly.

Table D 3.5.1-1 (page 2 of 3)
Radiological Environmental Monitoring Program

EXPOSURE PATHWAY AND/OR SAMPLE	NUMBER OF SAMPLES	SAMPLE LOCATIONS (a)	SAMPLING AND COLLECTION FREQUENCY	TYPE AND FREQUENCY OF ANALYSIS
3. Waterborne (continued)				
c. Soil from Shoreline	2 samples	Downstream area (Wc1) with existing or potential recreational value Upstream area (Wc2) control sample	Twice per year at least 90 days apart	Gamma isotopic (e) and Sr-90 analyses of each sample, semi-annually.
d. Ground Water	1 sample	Monitoring Well, SW of Site Boundary (Lafarge)	Semi-Annually	Gamma isotopic (e), H-3, Ni-63, and Sr-90 analyses of each sample, semi-annually.
4. Ingestion				
a. Milk (i)	3 samples from milch animals at MILK SAMPLING LOCATIONS If there are none, then 1 sample from milch animals at MILK SAMPLING LOCATIONS	In 3 locations (Ia1-Ia3) within 5 km having the highest dose potential (human consumption) In each of 3 areas (Ia1-Ia3) 5 to 8 km distance, if available, where doses are calculated to be > 1mrem per year (h)	Twice per month when animals are on pasture; monthly at other times	Gamma isotopic (e) and I-131 analyses of each sample.
	1 sample from a MILK SAMPLING LOCATION	At a control location (Ia4), approximately 15 to 30 km distant, and in the least prevalent wind direction	Concurrently, with indicator locations	
b. Fish and Invertebrates	(1) 1 sample each from edible portions of commercially or recreationally important species (2) 1 sample of the same species	In the vicinity of a plant discharge area (Ib1) If available in areas not influenced by plant discharge (Ib2)	Sample in season, or Semiannually if sample is not seasonal	Gamma isotopic, Ni-63, and Sr-90 analyses of each sample (e)

6/09

Table D 3.5.1-1 (page 3 of 3)
Radiological Environmental Monitoring Program

EXPOSURE PATHWAY AND/OR SAMPLE	NUMBER OF SAMPLES	SAMPLE LOCATIONS (a)	SAMPLING AND COLLECTION FREQUENCY	TYPE AND FREQUENCY OF ANALYSIS
4. Ingestion (continued) c. Food Products	(1) Samples of 3 different kinds of broad leaf vegetation (edible or inedible) (j)	Grown nearest to each of 2 different offsite locations of highest predicted annual average ground level D/Q if milk sampling is not performed (Ic1-Ic2)	Monthly when available	Gamma isotopic (e) and I-131 analyses
	(2) 1 sample of each of the similar broad leaf vegetation.	Grown 15 to 30 km distant in the least prevalent wind direction if milk sampling is not performed (Ic3)		

(a) The code letters in parenthesis, e.g., DR1, A1 refer to sample locations specified in ODCM, Part II. Specific parameters of distance and direction sector from the centerline of one reactor, and additional descriptions where pertinent, shall be provided for each and every sample location in Table D 3.5.1-1. Refer to NUREG-0133, "Preparation of Radiological Effluent Technical Specifications for Nuclear Power Plants," October 1978, and to Radiological Assessment Branch Technical Position on Environmental Monitoring, Revision 1, November 1979. Deviations are permitted from the required sampling schedule if specimens are unobtainable due to hazardous conditions, seasonal unavailability, malfunction of automatic sampling equipment and other legitimate reasons. If specimens are unobtainable due to sampling equipment malfunction, every effort shall be made to complete corrective action prior to the end of the next sampling period. All deviations from the sampling schedule shall be documented in the Annual Radiological Environmental Operating Report pursuant to D5.1.

(b) One or more instruments, such as a pressurized ion chamber, for measuring and recording dose rate continuously may be used in place of, or in addition to integrating dosimeters. Each of the 40 routine monitoring stations shall be equipped with 2 or more dosimeters or with 1 instrument for measuring and recording dose rate continuously. For the purpose of this table, a thermoluminescent dosimeter (TLD) is considered to be one phosphor; 2 or more phosphors in a packet are considered as 2 or more dosimeters. Film badges shall not be used as dosimeters for measuring direct radiation.

(c) The purpose of these samples is to obtain background information. If it is not practical to establish control locations in accordance with the distance and wind direction criteria, other sites, which provide valid background data, may be substituted.

(d) Airborne particulate sample filters shall be analyzed for gross beta activity 24 hours or more after sampling to allow for radon and thoron daughter decay.

(e) Gamma isotopic analysis means the identification and quantification of gamma –emitting radionuclides that may be attributable to the effluents from the facility.

(f) The "upstream" samples shall be taken near the intake structures as described in the ODCM. The ""downstream" sample shall be taken from the mixing zone at the diffuser of the discharge canal.

(g) In this program, a composite sample is one in which the quantity (aliquot) shall be collected at time intervals that are very short (e.g., hourly) relative to the compositing period (e.g., monthly) in order to assure obtaining a representative sample.

(h) The dose shall be calculated for the maximum organ and age group, using the methodology and parameters in the ODCM.

(i) The requirement to obtain and analyze samples from milch animals within 8 km of the site is intended to ensure monitoring of the "cow-milk" and vegetation pathways. Thus, only milch animals whose milk is used for human consumption are considered in the pathway and sample evaluation.

(j) Broad leaf vegetation sampling of at least three different kinds of vegetation may be performed at the SITE BOUNDARY in each of two different sectors with the highest predicted D/Q in lieu of the garden census.

Table D 3.5.1-2 (page 1 of 1)
Reporting Levels for Radioactivity in Environmental Samples **

RADIONUCLIDE ANALYSIS	WATER (pCi/L)	AIRBORNE PARTIUCLATE OR GASES (pCi/m^3)	FISH (pCi/kg, wet)	MILK (pCi/L)	FOOD PRODUCTS (pCi/kg, wet)
H-3	20,000 *				
Mn-54	1,000		30,000		
Fe-59	400		10,000		
Co-58	1,000		30,000		
Co-60	300		10,000		
Ni-63 ***	300		1,000		
Zn-65	300		20,000		
Sr-90 ***	8*		40		
Zr-95	400				
Nb-95	400				
I-131	2 *	0.9		3	100
Cs-134	30	10	1,000	60	1,000
Cs-137	50	20	2,000	70	2,000
Ba-140	200			300	
La-140	200			300	

* Values provided are for drinking water pathways. If no drinking water pathway exists, higher values are allowed, as follows:

H-3	30,000 pCi/L (This is a 40 CFR 141 value)
Sr-90	12 pCi/L
I-131	20 pCi/L

** These reporting levels are associated only with the REMP requirements. The Radiological Ground Water Monitoring Program may involve unique reporting level criteria, independent of the REMP, and defined in station procedures.

*** Sr-90 and Ni-63 are included in this table due to their historical presence in ground water and possible migration to the environment, per References 45 and 46.

Table D 3.5.1-3 (page 1 of 2)
Detection Capabilities for Environmental Sample Analysis (a) (e)

LOWER LIMIT OF DETECTION (LLD) (b) (c)

RADIONUCLIDE ANALYSIS	WATER (pCi/L)	AIRBORNE PARTIUCLATE OR GASES (pCi/m^3)	FISH (pCi/kg, wet)	MILK (pCi/L)	FOOD PRODUCTS (pCi/kg, wet)	SOIL or SEDIMENT (pCi/kg, dry)
Gross Beta	4	0.01				
H-3	2,000 (d)					
Mn-54	15		130			
Fe-59	30		260			
Co-58	15		130			
Co-60	15		130			
Ni-63 (f)	30		100			
Zn-65	30		260			
Sr-90 (f)	1		5			5000
Zr-95	15					
Nb-95	15					
I-131	1 (d)	0.07		1	60	
Cs-134	15	0.05	130	15	60	150
Cs-137	18	0.06	150	18	80	180
Ba-140	15			15		
La-140	15			15		

Table D 3.5.1-3 (page 2 of 2)
Detection Capabilities for Environmental Sample Analysis

Table Notation

(a) This list does not mean that only these nuclides are to be considered. Other peaks that are identifiable, together with those of the above nuclides, shall also be analyzed and reported in the Annual Radiological Environmental Operating Report pursuant to Specification D 5.1.

(b) Required detection capabilities for thermoluminescent dosimeters used for environmental measurements are given in Regulatory Guide 4.13.

(c) The LLD is defined as the smallest concentration of radioactive material in a sample that will yield a net count, above system background, that will be detected with 95% probability with only 5% probability of falsely concluding that a blank observation represents a "real" signal.

It should be recognized that the LLD is defined as an a priori (before the fact) limit representing the capability of a measurement system and not as an a posteriori (after the fact) limit for a particular measurement. Analyses shall be performed in such a manner that the stated LLDs will be achieved under routine conditions. Occasionally background fluctuations, unavoidable small sample sizes, the presence of interfering nuclides, or other uncontrollable circumstances may render these LLDs unachievable. In such cases, the contributing factors shall be identified and described in the Annual Radiological Environmental Operating Report pursuant to RECS D 5.1.

(d) These LLDs are for drinking water samples. If no drinking water pathway exists, the LLDs may be increased to 3,000 for H-3 and 15 for I-131.

(e) These required lower limits of detection are associated only with the REMP requirements. The Radiological Ground Water Monitoring Program may involve unique reporting level criteria, independent of the REMP, and defined in station procedures.

(f) Sr-90 and Ni-63 are included in this table due to their historical presence in ground water and possible migration to the environment, per References 45 and 46.

D 3.5 RADIOLOGICAL ENVIRONMENTAL MONITORING

D 3.5.2 Land Use Census

DLCO 3.5.2 A land use census shall:

a. Be conducted.

b. Identify within a distance of 8 km (5 miles) the location, in each of the 16 meteorological sectors, of the nearest milk animal, the nearest residence, and the nearest garden of > 50 m^2 (500 ft^2) producing broad leaf vegetation. Broad leaf vegetation sampling of at least three different kinds of vegetation may be performed at the SITE BOUNDARY in each of two different direction sectors with the highest predicted D/Qs in lieu of a garden census, per Table D 3.5.1-1, part 4.c.

APPLICABILITY: At all times.

ACTIONS

CONDITION	REQUIRED ACTION	COMPLETION TIME
A. Land use census identifies location(s) that yields a calculated dose, dose commitment, or D/Q value greater than the values currently being calculated in DSR 3.2.3.1.	A.1 Identify the new location(s) in the next Radioactive Effluent Release Report.	In accordance with the Radioactive Effluent Release Report

ACTIONS (continued)

CONDITION	REQUIRED ACTION	COMPLETION TIME
B. Land use census identifies location(s) that yields a calculated dose, or dose commitment (via the same exposure pathway) a factor greater than 2 than at a location from which samples are currently being obtained in accordance with Table D 3.5.1-1.	B.1 Add the new location(s) to the Radiological Environmental Monitoring Program.	30 days
	AND	
	B.2 Delete the sampling location(s), excluding the control station location, having the lowest calculated dose, dose commitment(s) or D/Q value, via the same exposure pathway, from the Radiological Environmental Monitoring Program.	After October 31 of the year in which the land use census was conducted
	AND	
	B.3 Submit in the next Radioactive Effluent Release Report documentation for a change in the ODCM including revised figure(s) and table(s) for the ODCM reflecting the new location(s) with information supporting the change in sampling locations.	In accordance with the Radioactive Effluent Release Report

SURVEILLANCE REQUIREMENTS

SURVEILLANCE		FREQUENCY
DSR 3.5.2.1	Conduct the land use census during the growing season using that information that will provide the best results, such as by a door-to-door survey, aerial survey, or by consulting local agriculture authorities.	366 days
DSR 3.5.2.2	Report the results of the land use census in the Annual Radiological Environmental Operating Report.	In accordance with the Annual Radiological Environmental Operating Report

D 3.5 RADIOLOGICAL ENVIRONMENTAL MONITORING

D 3.5.3 Interlaboratory Comparison Program

DLCO 3.5.3 The Interlaboratory Comparison Program shall be described in the ODCM.

AND

Analyses shall be performed on all radioactive materials, supplied as part of an Interlaboratory Comparison Program that has been approved by the Commission.

APPLICABILITY: At all times.

ACTIONS

CONDITION	REQUIRED ACTION	COMPLETION TIME
A. Analyses not performed as required.	A.1 Report the corrective actions taken to prevent a recurrence to the NRC in the Annual Radiological Environmental Operating Report.	In accordance with the Annual Radiological Environmental Operating Report

SURVEILLANCE REQUIREMENTS

SURVEILLANCE		FREQUENCY
DSR 3.5.3.1	Report a summary of the results obtained as part of the Interlaboratory Comparison Program in the Annual Radiological Environmental Operating Report.	In accordance with the Annual Radiological Environmental Operating Report

D 3.6 SOLID RADIOACTIVE WASTE

D 3.6.1 Solid Radwaste Treatment System

DLCO 3.6.1 The appropriate equipment of the Solid Radwaste Treatment System shall be in operation process wet radioactive wastes in accordance with the Process Control Program.

APPLICABILITY: During solid radwaste processing

ACTIONS

CONDITION	REQUIRED ACTION	COMPLETION TIME
A. Radioactive solid waste does not comply with Process Control Program requirements.	A.1 Suspend shipments of solid radioactive waste.	Immediately

SURVEILLANCE REQUIREMENTS

SURVEILLANCE		FREQUENCY
DSR 3.6.1.1	Verify solidification of specimens in accordance with the Processing Control Program.	Prior to each shipment
DSR 3.6.1.2	Record the following information for each class of solid waste (as defined by 10 CFR Part 61) shipped offsite during the Radioactive Effluent Release Report period: a. Container volume, b. total curie quantity (specify determined by measurement or estimate), c. principal radionuclides (specify determined by measurement or estimate), d. source of waste and processing employed (e.g., dewatered spent resin, compacted dry waste, evaporator bottoms), e. type of container (e.g., LSA Type A, Type B, Large Quantity), and f. solidification agent or absorbent (e.g., cement, urea formaldehyde).	Prior to each shipment

D 4.0 DESIGN FEATURES

D 4.1 UNRESTRICTED AREA

D 4.1.1 The definition of UNRESTRICED AREA used in implementing the Radiological Effluent Controls (RECS or ODCM Part I) has been expanded over that in 10 CFR 20.1003. For calculations performed pursuant to 10 CFR 50.36a, the concept of UNRESTRICTED AREAS refers to areas "at or beyond the SITE BOUNDARY" and does not include areas over water bodies.

A map representing the UNRESTRICTED AREA is shown in Figure D 4.1-1

Information which will allow identification of structures and release points for radioactive gaseous and liquid effluents is shown in Figure D 4.1-2.

D 4.1.2 For the purpose of satisfying 10 CFR Part 20, the "Restricted Area" is the same as the "Exclusion Area" defined in the FSARs.

Figure D 4.1-1

MAP DEFINING UNRESTRICTED AREAS
FOR RADIOACTIVE GASEOUS AND LIQUID EFFLUENTS

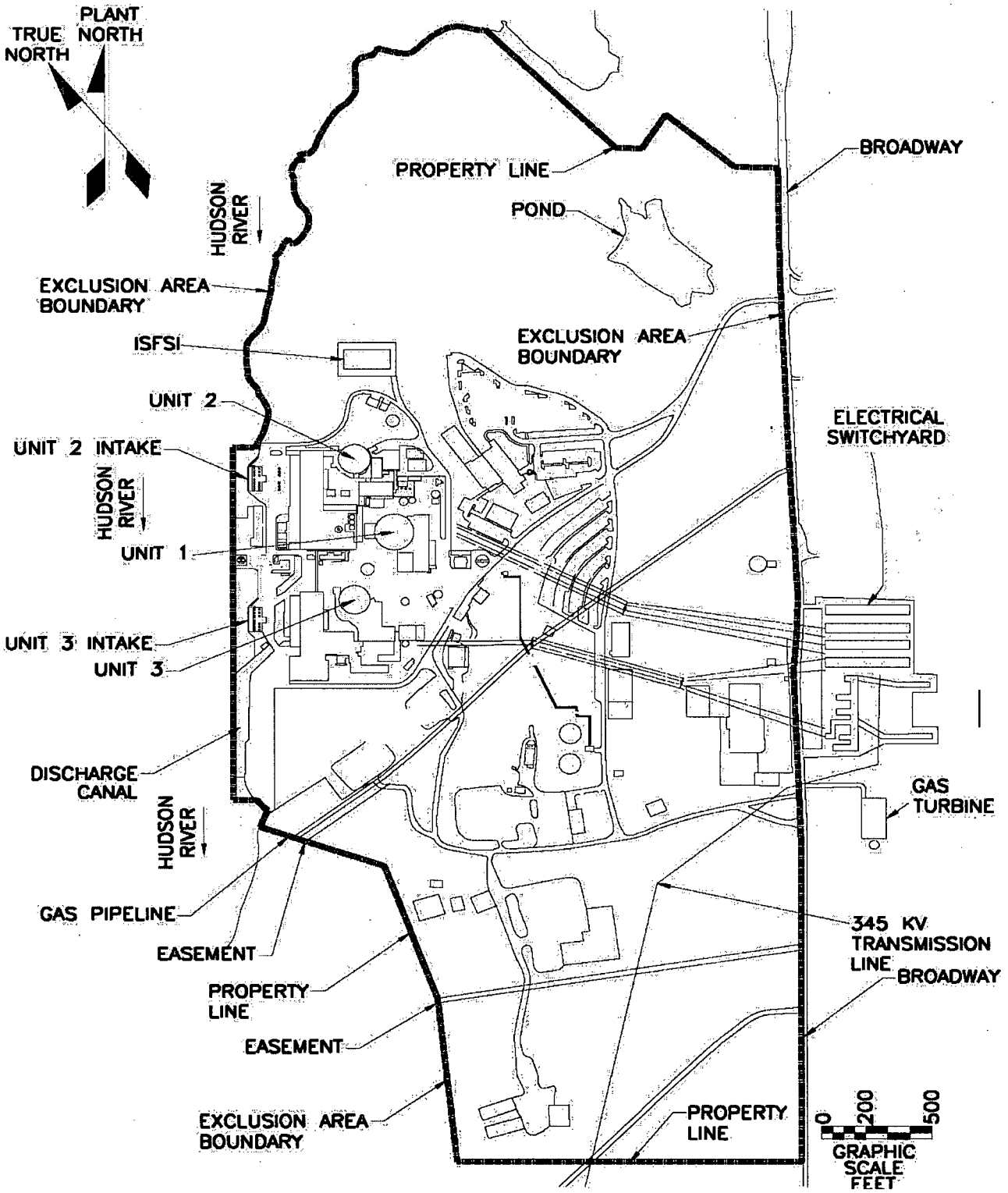

6/09

Figure D 4.1-2 MAP DEFINING RELEASE POINTS

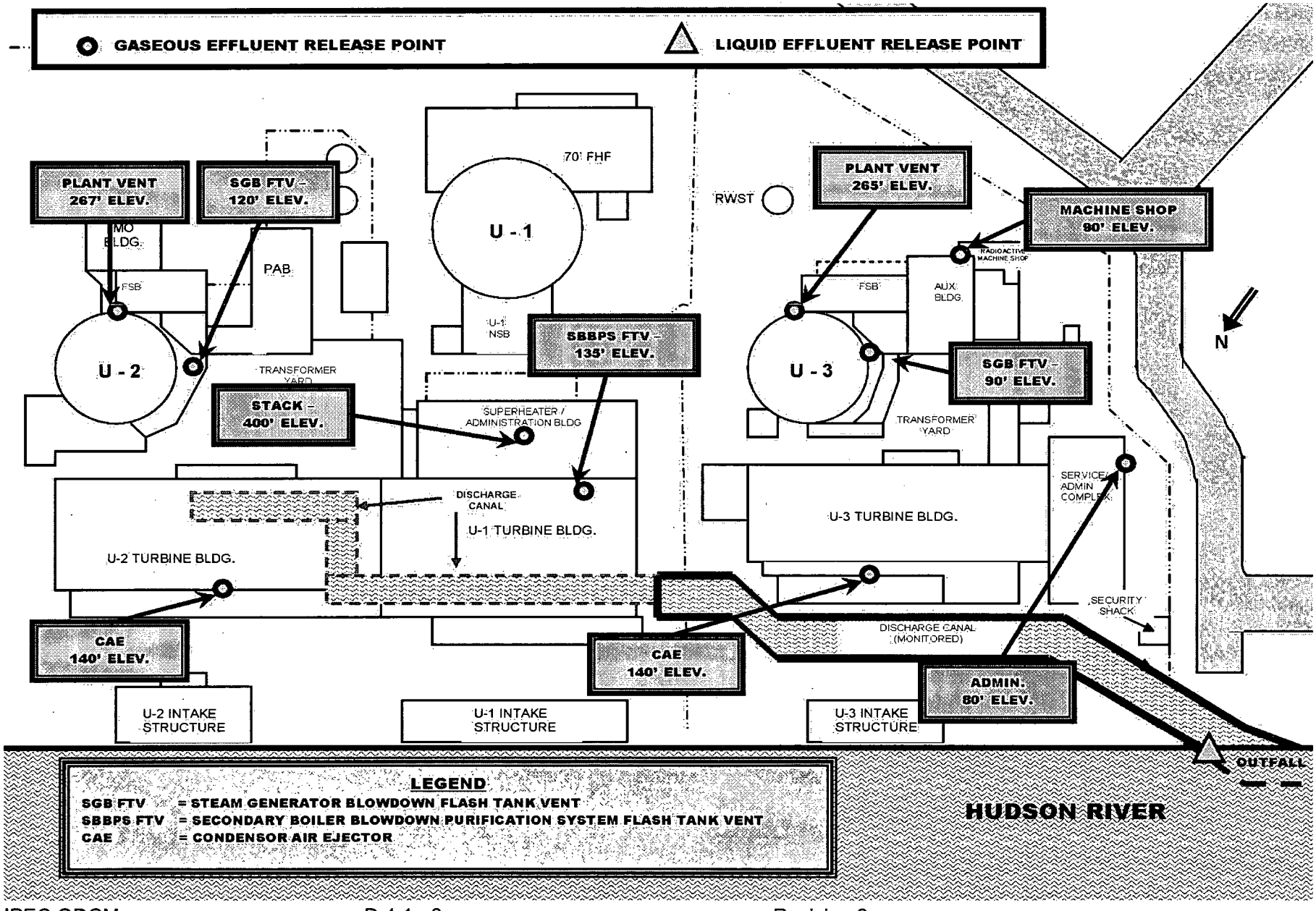

D 5.0 ADMINISTRATIVE CONTROLS

D 5.1 Annual Radiological Environmental Operating Report

An annual Radiological Environmental Operating Report covering the operation of the unit during the previous calendar year shall be submitted prior to May 15th of each year. Per the Technical Specification Reporting Requirements, a single submittal may be made for a multiple unit station.

The Annual Radiological Environmental Operating Report shall include:

- Summaries, interpretations, and an analysis of trends of the results of the Radiological Environmental Monitoring Program for the report period, including a comparison, as appropriate, with preoperational studies, with operational controls, and with previous environmental surveillance reports, and an assessment of the observed impacts of the plant operation on the environment.

- At least two legible maps covering all sampling locations keyed to a table giving distances and directions from the centerline of one reactor. One map shall cover stations near the site boundary and the second shall include the more distant stations.

- The results of analysis of all radiological environmental samples and of all environmental radiation measurements taken during the period pursuant to the locations specified in the tables and figures in the ODCM, as well as summarized and tabulated results of these analyses and measurements in the format of the table in the Radiological Assessment Branch Technical Position, Revision 1, November 1979. In the event that some individual results are not available for inclusion with the report, the report shall be submitted noting and explaining the reasons for the missing results. The missing data shall be submitted as soon as possible in a supplementary report.

- A summary description of the Radiological Environmental Monitoring Program.

- A discussion of the reasons for not conducting the Radiological Environmental Monitoring Program as specified by D 3.5.1 and the plans for preventing recurrence.

- A discussion of environmental sample measurements that exceed the reporting levels of Table D 3.5.1-2 but are not the result of plant effluents.

- A discussion of all deviations from the sampling schedule of Table D 3.5.1-1.

- A discussion of the contributing factors for cases in which the LLD required by Table D 3.5.1-3 was not achievable.

- A discussion of identifiable nuclide peaks, including those of nuclides specified in Table D 3.5.1-3.

- The results of the land use census.

- The corrective actions taken to prevent a recurrence if the Interlaboratory Comparison Program is not being performed as required.

- The results of licensee participation in the Interlaboratory Comparison Program.

D 5.0 ADMINISTRATIVE CONTROLS

D 5.2 Radioactive Effluent Release Report

The Radioactive Effluent Release Report to be submitted by May 1 of each year shall include:

a. A summary of the quantities of radioactive liquid and gaseous effluents and solid waste released from the unit as outlined in Regulatory Guide 1.21, "Measuring, Evaluating, and Reporting Radioactivity in Solid Wastes and Releases of Radioactive Materials in Liquid Gaseous Effluents from Light-Water-Cooled Nuclear Power Plants," Revision 1, June 1974, with data summarized on a quarterly basis following the format of Appendix B thereof.

b. An annual summary of hourly meteorological data collected over the previous year. This annual summary may be either in the form of an hour-by-hour listing on magnetic tape of wind speed, wind direction, atmospheric stability, and precipitation (if measured), or in the form of joint frequency distribution of wind speed, wind direction, and atmospheric stability. In lieu of submission with the Radioactive Effluent Release Report, the licensee has the option of retaining this summary of required meteorological data onsite in a file that shall be provided to the NRC upon request

c. An assessment of the offsite radiation doses due to the radioactive liquid and gaseous effluent releases from the unit or station during the previous calendar year. This assessment shall include potential offsite dose determined with data collected from the Radiological Ground Water Monitoring Program (RGWMP).

d. An assessment of the radiation doses from radioactive liquid and gaseous effluents to members of the public due to their activities inside the SITE BOUNDARY (Figure D 4.1-1) during the report period. All assumptions used in making these assessments, i.e., specific activity, exposure time and location, shall be included in these reports.

   Gaseous pathway doses are determined from sampling and measurements at the exhaust points, coupled with the use of annual-averaged meteorological data collected from a period of live data to verify its validity. The assessment of radiation doses shall be performed in accordance with the methodology and parameters in the Offsite Dose Calculation Manual (ODCM).

   Acceptable methods for calculating the dose contribution from liquid and gaseous effluents are given in Regulatory Guide 1.109, Rev. 1, October 1977.

D 5.2 Radioactive Effluent Release Report (continued)

e. The following information for each class of solid waste (in compliance with 10 CFR Part 61) shipped offsite during the report period:

1. Container volume,

2. total curie quantity (specify whether determined by measurement or estimate),

3. principal radionuclides (specify whether determined by measurement or estimate),

4. source of waste and processing employed (e.g., dewatered spent resin, compacted dry-waste, evaporator bottoms),

5. type of container (e.g., LSA, Type A, Type B, Large Quantity), and

6. solidification agent or absorbent (e.g., cement, urea formaldehyde).

f. A list and description of unplanned releases from the site to UNRESTRICTED AREAS of radioactive materials in gaseous and liquid effluents made during the reporting period.

g. A summary of data collected for the RGWMP, per D5.6 and NEI 07-07 - Industry Ground Water Protection Initiative.

h. Any changes made during the reporting period to the Process Control Program (PCP) and to the Offsite Dose Calculation Manual (ODCM), as well as a listing of new locations for dose calculations and/or environmental monitoring identified by the land use census pursuant to Specification D 3.5.2.

D 5.0 ADMINISTRATIVE CONTROLS

D 5.3 Special Reports

Special reports shall be submitted to the NRC Regional Administrator of the Region I Office within the time period specified for each report. These reports shall be submitted covering the activities identified below pursuant to the applicable Specification:

a. Radioactive Effluents (Specifications D 3.1, D 3.2 and D 3.4)

b. Radiological Environmental Monitoring (Specification D 3.5)

D 5.0 ADMINISTRATIVE CONTROLS

D 5.4 Major Changes to Radioactive Waste Systems

Licensee initiated major changes to the radioactive waste systems (liquid, gaseous and solid) shall be reported to the Commission in the Radioactive Effluent Release Report for the period in which the change was made. The discussion of each change shall contain:

a. A summary of the evaluation that led to the determination that the change could be made in accordance with 10 CFR Part 50.59,

b. sufficient detailed information to totally support the reason for the change without benefit of additional or supplemental information,

c. a detailed description of the equipment, components and processes involved and the interfaces with other plant systems,

d an evaluation of the change, which shows the predicted releases of radioactive materials in liquid and gaseous effluents and/or quantity of solid waste that differ from those previously predicted in the license application and amendments thereto,

e. an evaluation of the change, which shows the expected maximum exposures to individuals in the UNRESTRICTED AREA and to the general population that differ from those previously estimated in the license application and amendments thereto,

f. a comparison of the predicted releases of radioactive materials in liquid and gaseous effluents and in solid waste to the actual releases for the period in which the changes are to be made;

g. an estimate of the exposure to plant operating personnel as a result of the change, and

h. documentation of the fact that the change was reviewed and found acceptable by the OSRC.

D 5.0 ADMINISTRATIVE CONTROLS

D 5.5 Process Control Program

Licensee initiated changes to the Process Control Program (PCP):

a. Shall be submitted to the Commission in the Annual Radioactive Effluent Release Report for the period in which the change(s) was made. This submittal shall contain:

   1. sufficiently detailed information to totally support the rationale for the change without benefit of additional or supplemental information,

   2. a determination that the change did not reduce the overall conformance of the solidified waste product to existing criteria for solid wastes, and

   3. documentation of the fact that the change has been reviewed and found acceptable by the OSRC.

b. Shall become effective upon review and acceptance by the OSRC.

D 5.6 Radiological Ground Water Monitoring Program (RGWMP)

The purpose of the RGWMP is to monitor, investigate, and characterize any contamination of groundwater from licensed radioactive material at Indian Point Energy Center (IPEC).

a. The program is also required in order to meet the following objectives:

   - The Nuclear Energy Institute Groundwater Protection Initiative (NEI-07-07),
   - American Nuclear Insurers Guideline for unmonitored releases (ANI 07-01),
   - EPRI Groundwater Protection Guidelines, (report #1015118, Nov 2007),
   - NRC Information Notice 2006-13, Groundwater Contamination Due to Undetected Leakage of Radioactive Water,
   - IPEC commitments to the NRC, Entergy Letter NL-06-033, "Current Status/Future Plans Regarding Onsite Groundwater Contamination at IPEC",
   - IPEC commitments to the NRC, Entergy Letter NL-08-079, "Remediation and Long Term Monitoring of Site Groundwater". *6/09*

b. Specific monitoring objectives of the program include:

   - Monitoring the status of any known radiological groundwater plumes,
   - Detecting and quantifying previously unidentified sources of groundwater contamination, such as spills or leaks from a radioactively contaminated system, structure, or component,
   - Providing data to calculate potential offsite doses to a member of the public,
   - Monitoring and evaluating the long term effectiveness of remediation or intervention.

D 5.0 ADMINISTRATIVE CONTROLS

D 5.6 Radiological Ground Water Monitoring Program (RGWMP) (continued)

c. Investigation and characterization activities are performed to evaluate and understand any groundwater contamination once it has been identified, or an event (such as a spill or leak) with the potential to contaminate the groundwater to levels above the investigation levels has occurred. Specific investigation and characterization objectives of the program include:

- Determining the source(s) of groundwater contamination (eg, leaking radioactive components or systems, radioactive spills, or legacy soil/bedrock contamination),
- Determining the locations, extent, and concentrations of groundwater contamination (eg, plume definition),
- Evaluating necessary corrective or investigative actions, utilizing the Corrective Action Program. 6/09

d. Station procedures shall include detailed information regarding the following:

- The purpose and scope of the program, as defined above,
- Location and periodicities of samples,
- Required radionuclides for analysis, including limits of detection,
- Guidance for communication of abnormal results,
- Guidance regarding the generation of periodic summary reports.

e. Elements of the RGWMP program that intersect the REMP shall be included in the Annual Radiological Environmental Operating Report, per D 5.1.

f. An evaluation of the EFFLUENT impact, and a summary of the sample data from the RGWMP shall be included in the annual Radiological Effluent Release Report, as identified in ODCM D 5.2.

Indian Point Energy Center

Offsite Dose Calculation Manual

Part I (RECS)

BASES

3.0 APPLICABILITY

BASES

DLCOs 3.0.1, 3.0.2, and 3.0.5, and DSRs 3.0.1, 3.0.2, and 3.0.3 reflect parallel requirements in the Technical Specifications. Refer to Technical Specification Bases for appropriate discussions.

ODCM Specification DLCO 3.0.3, in lieu of imposing a plant shutdown as paralleled in Technical Specifications, requires: (a) an Action to initiate efforts to restore compliance with the ODCM or associated Actions; and (b) an Action that requires entering the circumstances into the Corrective Action Program (CAP). These requirements ensure that the appropriate actions continue to be focused on and that the circumstances concerning failure to comply with the ODCM Actions would be reviewed. This review will be conducted in accordance with the procedural guidance for CAP Notifications.

There are no ODCM 3.0 Specifications that parallel Technical Specification LCO 3.0.4 or SR 3.0.4. Restrictions in entering MODES or other specified conditions in the Applicability have historically not been applied to ODCM Specifications. There are also no ODCM 3.0 Specifications that parallel Technical Specification LCO 3.0.6 and LCO 3.0.7, which allow for exceptions and revisions of other Technical Specifications. They are not applicable to the ODCM since it is not permitted to allow the ODCM to revise a Technical Specification.

(Note, currently no identified ODCM DLCOs support Technical Specification systems; however, this discussion is presented to address the philosophy that would be applied.) An allowance similar to Technical Specification LCO 3.0.6 does not apply to the ODCM. When a Technical Specification supported system LCO is discovered to be not met solely due to a ODCM support system DLCO not met, appropriate Technical Specification ACTIONS are required to be entered immediately. This applies even in instances where the ODCM contains a delay prior to declaring a Technical Specification supported system inoperable. In this case, certain ODCM inoperabilities may not directly impact the OPERABILITY of the Technical Specification supported system and delayed declaration of inoperability of the supported system is acceptable. In other cases, discovered support system inoperabilities that directly result in supported system inability to perform the safety function, should result in immediate declaration of inoperability of the supported system.

Technical Specification LCO 3.0.7 has no parallel in the ODCM since it provides for explicit changes to specified Technical Specifications by the Section 3.1.8 Specifications. However, in the event that LCO 3.0.7 provides for changes to the Technical Specification MODE definitions by the Section 3.1.8 Specifications, the revised MODE definitions apply to all plant references, including ODCM references.

D 3.1 RADIOACTIVE LIQUID EFFLUENTS

D 3.1.1 Liquid Effluent Concentrations

BASES

It is expected that the release of radioactive materials in liquid and gaseous effluents to UNRESTRICTED AREAS will not exceed a small fraction of the concentration limits specified in 10 CFR Part 20 and should be as low as reasonably achievable (ALARA) in accordance with the requirement of 10 CFR 50.36a. While providing reasonable assurance that the design objectives will be met, these Specifications permit the flexibility of operation, compatible with considerations of health and safety, to ensure that the public is provided a dependable source of power under unusual operating conditions which may temporarily result in releases higher than the design objective levels, but still less than ten times the effluent concentration limits (EC's) specified in 10 CFR Part 20. It is expected that using this operational flexibility under unusual operation conditions, and exerting every effort to keep levels of radioactive materials in liquid and gaseous wastes as low as reasonably achievable, releases will not exceed a small fraction of the concentration limits specified in 10 CFR Part 20.

The design objectives have been developed based on operating experience, taking into account a combination of variables including defective fuel, primary system leakage, primary to secondary system leakage, steam generator blowdown and the performance of the various waste treatment systems, and are consistent with 10 CFR Part 50.36a.

The Indian Point site is a multiple-unit site. There exist shared radwaste treatment systems and shared effluent release points. Where site limits must be met, the effluents of all the units will be combined to determine site compliance. For instances where unit-specific information may be required for radwaste processed or released via a shared system, the effluents shall be proportioned among the units sharing the system(s) in accordance with the methods and agreements set forth in the ODCM.

This specification is provided to ensure that the concentration of radioactive materials released in liquid waste effluents to UNRESTRICTED AREAS will be less than ten times the EFFLUENT CONCENTRATIONS specified in 10 CFR Part 20. This limitation provides additional assurance that the levels of radioactive materials in bodies of water in UNRESTRICTED AREAS will result in exposures within (1) the Section II.A design objectives of Appendix I, 10 CFR Part 50, to a member of the public and (2) the limits of 10 CFR Part 20.1302 to the population. The concentration limit for dissolved or entrained noble gases is based upon the assumption that Xe-135 is the controlling radioisotope and its MPC in air (submersion) was converted to an equivalent concentration in water using the methods described in International Commission on Radiological Protection (ICRP) Publication 2.

This specification applies to the release of liquid effluents from all units on site.

D 3.1 RADIOACTIVE LIQUID EFFLUENTS

D 3.1.2 Liquid Effluents Dose

BASES

This Specification is provided to implement the requirements of Sections II.A, III.A and IV.A of Appendix I, 10 CFR Part 50. The DLCO implements the guides set forth in Section II.A of Appendix I. The action statements provide the required operating flexibility and at the same time implement the guides set forth in Section IV.A of Appendix I to assure that the releases of radioactive material in liquid effluents will be kept "as low as reasonably achievable".

Also, for fresh water sites to UNRESTRICTED AREA with drinking water supplies that can be potentially affected by plant operations, there is reasonable assurance that the operation of the facility will not result in radionuclide concentration in the finished drinking water that are in excess of the requirements of 40 CFR Part 141.

The dose calculation methodology and parameters in the ODCM implement the requirements in Section III.A of Appendix I; that conformance with the guides of Appendix I be shown by calculational procedures based on models and data, such that the actual exposure of a MEMBER OF THE PUBLIC through appropriate pathways is unlikely to be substantially underestimated. The equations specified in the ODCM for calculating the doses due to the actual release rates of radioactive materials in liquid effluents are consistent with the methodology provided in Regulatory Guide 1.109, "Calculation of Annual Doses to Man from Routine Releases of Reactor Effluents for the Purpose of Evaluating Compliance with 10 CFR Part 50, Appendix I", Revision 1, October 1977 and Regulatory Guide 1.113, "Estimating Aquatic Dispersion of Effluents from Accidental and Routine Reactor Releases for the Purpose of Implementing Appendix I", April 1977.

In addition to the limiting conditions for operation, the reporting requirements specify that the licensee shall identify the cause whenever the dose from the release of radioactive materials in liquid waste effluent exceeds the above limits and describe the proposed program of action to reduce such releases to design objective levels on a timely basis.

D 3.1 RADIOACTIVE LIQUID EFFLUENTS

D 3.1.3 Liquid Radwaste Treatment System

BASES

This Specification requires that the licensee maintain and operate appropriate equipment installed in the liquid waste systems, when necessary, to provide assurance that the releases of radioactive materials in liquid effluents will be kept "as low as reasonably achievable". This Specification implements the requirements of 10 CFR 50.36a, General Design Criterion 60 of Appendix A to 10 CFR Part 50, and the design objective given in Section II.D of Appendix I to 10 CFR Part 50. The specified limits governing the use of appropriate portions of the liquid radwaste treatment system were specified as a suitable fraction of the dose design objectives set forth in Section II.A of Appendix I to 10 CFR Part 50 for liquid effluents.

D 3.1 RADIOACTIVE LIQUID EFFLUENTS

D 3.1.4 Liquid Holdup Tanks

BASES

The tanks listed in this Specification include outdoor tanks that are not surrounded by liners, dikes, or walls capable of holding the tank contents and that do not have tank overflows and surrounding area drains connected to the liquid radwaste treatment system. These tanks include the following:

a. Refueling Water Storage Tanks

b. Primary Water Storage Tanks

c. 13 Waste Distillate Storage Tank

d. 14 Waste Distillate Storage Tank

e. 31 Monitor Tank

f. 32 Monitor Tank

g. Unit 3 CPF High Total Dissolved Solids Tank

h. Unit 3 CPF Low Total Dissolved Solids Tank

i. Any Outside Temporary Tank

Restricting the quantity of radioactive material contained in the specified tanks provides assurance that, in the event of an uncontrolled release of any such tank's contents, the resulting concentration would be less than the limits of 10 CFR 20 at the nearest potable water supply and the nearest surface water supply in an UNRESTRICTED AREA.

D 3.2 RADIOACTIVE GASEOUS EFFLUENTS

D 3.2.1 Gaseous Effluents Dose Rate

BASES

This Control provides reasonable assurance that radioactive material discharged in gaseous effluents will not result in the exposure of a MEMBER OF THE PUBLIC in an UNRESTRICTED AREA, either at or beyond the SITE BOUNDARY in excess of the design objectives of Appendix I to 10 CFR Part 50. This Control is provided to ensure that gaseous effluents from all units on the site will be appropriately controlled. It provides operational flexibility for releasing gaseous effluents to satisfy the Section II.A and II.C design objectives of Appendix I to 10 CFR Part 50. For MEMBERS OF THE PUBLIC who may at times be within the SITE BOUNDARY, the occupancy of that MEMBER OF THE PUBLIC will usually be sufficiently low to compensate for the reduced atmospheric dispersion of gaseous effluents relative to that for the SITE BOUNDARY. Examples of calculations for such MEMBERS OF THE PUBLIC, with the appropriate occupancy factors, shall be given in the ODCM. The specified release rate limits restrict, at all times, the corresponding dose rates above background to a MEMBER OF THE PUBLIC at or beyond the SITE BOUNDARY to less than or equal to 500 mrem/year to the total body or to less than or equal to 3000 mrem/year to the skin. These release rate limits also restrict, at all times, the corresponding thyroid dose rate above background to a child via the inhalation pathway to less than or equal to 1500 mrem/year. This Control does not affect the requirement to comply with the annual limitations of 10 CFR 20.

This Control applies to the release of gaseous effluents from all units at the site.

D 3.2 RADIOACTIVE GASEOUS EFFLUENTS

D 3.2.2 Gaseous Effluents Dose – Noble Gas

BASES

This Specification is provided to implement the requirements of Sections II.B, III.A, and IV.A of Appendix I to 10 CFR Part 50. The DLCO implements the guides set forth in Section II.B of Appendix I. The action statements provide the required operating flexibility and, at the same time, implement the guides set forth in Section IV.A of Appendix I to assure that the releases of radioactive material in gaseous effluents to UNRESTRICTED AREAS will be kept "as low as reasonably achievable." The Surveillance Requirements implement the requirements in Section III.A of Appendix I that conformance with the guides of Appendix I be shown by calculational procedures based on models and data such that the actual exposure of a MEMBER OF THE PUBLIC through appropriate pathways is unlikely to be substantially underestimated. The dose calculation methodology and parameters established in the ODCM for calculating the doses due to the actual release rates of radioactive noble gases in gaseous effluents are consistent with the methodology provided in Regulatory Guide 1.109, "Calculation of Annual Doses to Man from Routine Releases of Reactor Effluents for the Purpose of Evaluating Compliance with 10 CFR Part 50, Appendix I," Revision 1, October 1977 and Regulatory Guide 1.111, "Methods for Estimating Atmospheric Transport and Dispersion of Gaseous Effluents in Routine Releases form Light-Water Cooled Reactors," Revision 1, July 1977. The ODCM equations provided for determining the doses at and beyond the SITE BOUNDARY are based upon the historical average atmospheric conditions.

This Control applies to the release of gaseous effluents from each unit on site.

D 3.2 RADIOACTIVE GASEOUS EFFLUENTS

D 3.2.3 Gaseous Effluents Dose – Iodine and Particulate

BASES

This Specification is provided to implement the requirements of Section II.C, III.A and IV.A of Appendix I to 10 CFR Part 50. The DLCOs are the guides set forth in Section II.C of Appendix I. The action statements provide the required operating flexibility and, at the same time, implement the guides set forth in Section IV.A of Appendix I to assure that the releases of radioactive materials in gaseous effluents to UNRESTRICTED AREAS will be kept "as low as reasonably achievable."

The ODCM calculational methods specified in the Surveillance Requirements implement the requirements in Section III.A of Appendix I that conformance with the guides of Appendix I be shown by calculational procedures based on models and data, such that the actual exposure of a MEMBER OF THE PUBLIC through appropriate pathways is unlikely to be substantially underestimated.

The ODCM calculational methodology and parameters for calculating the doses due to the actual release rates of the subject materials are consistent with the methodology provided in Regulatory Guide 1.109, "Calculation of Annual Doses to Man from Routine Releases of Reactor Effluents for the Purpose of Evaluating Compliance with 10 CFR Part 50, Appendix I," Revision 1, October 1977 and Regulatory Guide 1.111, "Methods for Estimating Atmospheric Transport and Dispersion of Gaseous Effluents in Routine Releases from Light-Water-Cooled Reactors," Revision 1, July 1977. These equations also provide for determining the actual doses based upon the historical average atmospheric conditions.

The release rate specifications for iodine-131, tritium, and radionuclides in particulate form with half-lives greater than 8 days are dependent upon the existing radionuclide pathways to man in the areas at and beyond the SITE BOUNDARY.

The pathways that were examined in the development of these calculations were (1) individual inhalation of airborne radionuclides, (2) deposition of radionuclides onto green leafy vegetation with subsequent consumption by man, (3) deposition onto grassy areas where milk animals and meat-producing animals graze with consumption of the milk and meat by man (applied where applicable), and (4) deposition on the ground with subsequent exposure of man.

This Control applies to the release of gaseous effluents from each reactor on site.

D 3.2 RADIOACTIVE GASEOUS EFFLUENTS

D 3.2.4 Gaseous Radwaste Treatment System

BASES

This Specification requires that the appropriate portions of the Gaseous Radwaste Treatment System be used, when specified, to provide reasonable assurance that the releases of radioactive materials in gaseous effluents will be kept "as low as reasonably achievable." This Specification implements the requirements of 10 CFR Part 50.36a, General Design Criterion 60 of Appendix A to 10 CFR Part 50, and the design objectives given in Section II.D of Appendix I to 10 CFR Part 50. The specified limits governing the use of appropriate portions of the systems were specified as a suitable fraction of the dose design objectives set forth in Sections II.B and II.C of Appendix I, 10 CFR Part 50, for gaseous effluents.

This Specification applies to the release of gaseous effluents from each reactor on site.

D 3.2 RADIOACTIVE GASEOUS EFFLUENTS

D 3.2.5 Ventilation Exhaust Treatment System

BASES

This Specification requires that the appropriate portions of the Ventilation Exhaust Treatment System be used, when specified, to provide reasonable assurance that the releases of radioactive materials in gaseous effluents will be kept "as low as reasonably achievable." This Specification implements the requirements of 10 CFR Part 50.36a, General Design Criterion 60 of Appendix A to 10 CFR Part 50, and the design objectives given in Section II.D of Appendix I to 10 CFR Part 50. The specified limits governing the use of appropriate portions of the systems were specified as a suitable fraction of the dose design objectives set forth in Sections II.B and II.C of Appendix I, 10 CFR Part 50, for gaseous effluents.

This Specification applies to the release of gaseous effluents from each reactor on site.

D 3.2 RADIOACTIVE GASEOUS EFFLUENTS

D 3.2.6 Gas Storage Tanks

BASES

The tanks included in this Specification are those tanks for which the quantity of radioactivity contained is not limited directly or indirectly by other specifications to a quantity that is less than the quantity that provides assurance that, in the event of an uncontrolled release of the tank's contents, the resulting total body exposure to a MEMBER OF THE PUBLIC at the nearest SITE BOUNDARY will not exceed 0.5 Rem in an event of 2 hours duration.

Restricting the quantity of radioactivity contained in each gas storage tank provides assurances that, in the event of an uncontrolled release of the tank's contents, the resulting total body exposure to a MEMBER OF THE PUBLIC at the nearest SITE BOUNDARY will not exceed 0.5 Rem. This is consistent with Branch Technical Position ETSB 11-5 in NUREG-0800, July 1981, and NUREG 0133.

D 3.3 INSTRUMENTATION

D 3.3.1 Radioactive Liquid Effluent Monitoring Instrumentation

BASES

The radioactive liquid effluent instrumentation, required OPERABLE by this Specification, is provided to monitor and control, as applicable, the releases of radioactive materials in liquid effluents during actual or potential releases. The alarm/trip setpoints for these instruments shall be calculated in accordance with methods set forth in the ODCM to ensure that the alarm/trip will occur prior to exceeding ten times the EFFLUENT CONCENTRATION values specified in 10 CFR Part 20.

The operability and use of this instrumentation is consistent with the requirements of General Design Criteria 60, 63 and 64 of Appendix A to 10 CFR Part 50. The purpose of tank level indicating devices is to assure the detection and control of leaks that, if not controlled, could potentially result in the transport of radioactive materials to UNRESTRICTED AREAS.

D 3.3 INSTRUMENTATION

D 3.3.2 Radioactive Gaseous Effluent Monitoring Instrumentation

BASES

The radioactive gaseous effluent instrumentation, required OPERABLE by this Specification, is provided to monitor and control, as applicable, the releases of radioactive materials in gaseous effluents. The alarm/trip setpoints for these instruments shall be calculated and adjusted in accordance with the methodology and parameters in the ODCM to ensure that the alarm/trip will occur prior to exceeding release rates corresponding to effluent dose rates of 0.5 Rem/yr whole body, and 3.0 Rem/yr to the skin.

This instrumentation also includes provisions for monitoring the concentrations of potentially explosive gas mixtures in the waste gas holdup system. The OPERABILITY and use of this instrumentation is consistent with the requirements of General Design criteria 60, 63 and 64 in Appendix A to 10 CFR Part 50.

D 3.4 RADIOACTIVE EFFLUENTS TOTAL DOSE

D 3.4.1 Radioactive Effluents Total Dose

BASES

This Specification is provided to meet the dose limitation of 40 CFR Part 190 that has been incorporated into 10 CFR Part 20 by 46 FR 18525. The Specification requires the preparation and submittal of a special report whenever the calculated doses from plant-generated radioactive effluents and direct radiation exceed 25 mrem to the total body or any organ, except the thyroid, which shall be limited to less than or equal to 75 mrem.

For sites containing up to 4 reactors, it is highly unlikely that the resultant dose to a MEMBER OF THE PUBLIC will exceed the dose limits of 40 CFR Part 190 if the individual reactors remain within twice the dose design objectives of Appendix I, and if direct radiation doses from the reactor units and outside storage tanks are kept small.

The special report will describe a course of action that should result in the limitation of the annual dose to a MEMBER OF THE PUBLIC to within the 40 CFR Part 190 limits. For the purposes of the special report, it may be assumed that the dose commitment to the MEMBER OF THE PUBLIC from other uranium fuel cycle sources is negligible, with the exception that dose contribution from other nuclear fuel cycle facilities at the same site or within a radius of 8 km must be considered.

If the dose to any MEMBER OF THE PUBLIC is estimated to exceed the requirements of 40 CFR Part 190, the special report with a request for a variance (provided the release conditions resulting in violation of 40 CFR Part 190 have not already been corrected), in accordance with the provisions of 40 CFR Part 190.11 and 10 CFR Part 20.2203(a)(4), is considered to be a timely request and fulfills the requirements of 40 CFR Part 190 until NRC staff action is completed.

The variance only relates to the limits of 40 CFR Part 190, and does not apply in any way to the other requirements for dose limitation of 10 CFR Part 20, as addressed in Specifications D 3.1.1 and D 3.2.1. An individual is not considered a MEMBER OF THE PUBLIC during any period in which he/she is engaged in carrying out any operation that is part of the nuclear fuel cycle.

D 3.5 RADIOLOGICAL ENVIRONMENTAL MONITORING

D 3.5.1 Radiological Environmental Monitoring Program

BASES

The radiological environmental monitoring program required by this specification provides representative measurements of radiation and of radioactive materials in those exposure pathways and for those radionuclides that lead to the highest potential radiation exposures of members of the public resulting from the station operation.

This monitoring program implements Section IV.B.2 of Appendix I to 10 CFR Part 50 and thereby supplements the radiological effluent monitoring program by verifying that the measurable concentrations of radioactive materials and levels of radiation are not higher than expected on the basis of the effluent measurements and the modeling of the environmental exposure pathways.

Guidance for this monitoring program is provided by the Radiological Assessment Branch Technical Position on Environmental Monitoring. Program changes may be initiated based on operational experience.

The required detection capabilities for environmental sample analyses are tabulated in terms of the lower limits of detection (LLDs). The LLDs required by Table D 3.5.1-3 are considered optimum for routine environmental measurements in industrial laboratories.

It should be recognized that the LLD is defined as an a priori (before the fact) limit representing the capability of a measurement system and not as an a posteriori (after the fact) limit for a particular measurement.

D 3.5 RADIOLOGICAL ENVIRONMENTAL MONITORING

D 3.5.2 Land Use Census

BASES

This specification is provided to ensure that changes in the use of areas at and beyond the SITE BOUNDARY are identified and that modifications to the radiological environmental monitoring program are made if required by the results of this census.

The best information from the door-to-door survey, from aerial survey or from consulting with local agricultural authorities shall be used.

This census satisfies the requirements of Section IV.B.3 of Appendix I to 10 CFR Part 50.

Restricting the census to gardens of greater than 50 m^2 provides assurance that significant exposure pathways via leafy vegetables will be identified and monitored since a garden of this size is the minimum required to produce the quantity (26 kg/year) of leafy vegetables assumed in Regulatory Guide 1.109 for consumption by a child.

To determine this minimum garden size, the following assumptions were made: (1) 20% of the garden was used for growing broad leaf vegetation (i.e., similar to lettuce and cabbage), and (2) a vegetation yield of 2 kg/m^2.

D 3.5 RADIOLOGICAL ENVIRONMENTAL MONITORING

D 3.5.3 Interlaboratory Comparison Program

BASES

The requirement for participation in an approved Interlaboratory Comparison Program is provided to ensure that independent checks on the precision and accuracy of the measurements of radioactive material in environmental sample matrices are performed as part of the quality assurance program for environmental monitoring (developed using the guidance in Regulatory Guide 1.21, Revision 1, April 1974 and Regulatory Guide 4.1, Revision 1, April 1975) in order to demonstrate that the results are valid for the purposes of Section IV.B.2 of Appendix I to 10 CFR Part 50.

D 3.6 SOLID RADWASTE TREATMENT SYSTEM

D 3.6.1 Solid Radwaste Treatment System

BASES

This Specification implements the requirements of 10 CFR Part 50.36a and General Design Criterion 60 of Appendix A to 10 CFR Part 50. The process parameters included in establishing the process control program may include, but are not limited to, waste type, waste pH, waste/liquid/solidification agent/catalyst ratios, waste oil content, waste principal chemical constituents, and mixing and curing times.

INDIAN POINT ENERGY CENTER

OFFSITE DOSE CALCULATION MANUAL

ODCM PART II - CALCULATIONAL METHODOLOGIES

Revision 2

1.0 RADIATION MONITORS AND SETPOINTS

1.1 Effluent Monitoring System Description

Information regarding effluent radiation monitor function and setpoint bases is provided in Tables 1-1 and 1-2. Additionally, Appendices B and C show a schematic of release pathways, including the relative position and application of these monitors.

1.2 Setpoints for Airborne Effluent Monitors

Setpoints for airborne (gaseous) monitors are based on the permissible discharge rate as calculated in Section 3 of the ODCM, Part II, and shown in Appendix I. These setpoints are inherently conservative due to the assumed mixture (Table 3-8). They are tiered in such a way as to ensure proper (higher) authentication is obtained as the selected limit (and expected release rate) increases.

The Annual Limit is used to conservatively establish initial setpoints for routine operation. For releases associated with unit shutdown, etc, additional permission may be obtained to apply the quarterly or instantaneous values, per Section 3.1.8. This method ensures operational control of releases, while precluding approaching the limits of D3.2.1.

The methodology identified in Section 3 and Appendix I is used to generate the following release rate limits (radiation monitor setpoint calculations only use the noble gas rates):

Conservative Permissible Discharge Rates (μCi/sec)					
Type of Limit	Basis	Iodine/Particulate*		Noble Gases	
		Unit 2	Unit 3	Unit 2	Unit 3
Annual Average	ODCM, Part II, App I	**4.01E-2**	**4.05E-2**	**7.20E+3**	**3.57E+3**
Quarterly Average	ODCM, Part II, App I	**8.02E-2**	**8.10E-2**	**1.44E+4**	**7.14E+3**
Instantaneous	RECS D3.2.1 and App I	**1.38E+1**	**1.38E+1**	**7.00E+4**	**7.00E+4**

* Half-lives greater than 8 days

1.2.1 The Plant Vent Wide Range Gas Monitor (R-27) reads in μCi/sec. Therefore, at unit 3, the alarm setpoints are set directly in μCi/sec. (Unit 2 does not apply alarm setpoints to R-27).

1.2.2 If the monitor reads and alarms in μCi/cc, the maximum alarm set point is calculated as follows:

$$S = D / [(F) * (4.72E+2)]$$ where;

S = Maximum alarm setpoint in μCi/cc

D = Permissible discharge rate in μCi/sec

F = Vent duct flow in ft^3/min

4.72E+2 = unit conversion factor (28317 cc•min/ft^3•60sec)

1.2.3 If the monitor reads and alarms in cpm, then the maximum alarm setpoint is calculated as follows:

$$S = D / [(F) * (4.72E+2) * (CF)]$$

where:

S, D, F, and 4.72E+2 are defined in the previous step

CF = Rad Monitor Conversion Factor (μCi/cc per net cpm)

1.2.4 Normally, maximum allowable limits are calculated using a standard nuclide mix. However, setpoints may be determined based on the actual mix, on a case by case basis. This method is usually performed when the instantaneous release rate is applied. Should this method be applied, extra care should be applied to setpoint partitioning (for all release points) to ensure site dose rate limits are not approached.

1.2.5 During normal operation, the main plant vent is the only significant release point at either unit. Hence, monitors on the plant vent are routinely set at the *annual* limit, which is approximately 10% of the conservative *instantaneous* limit.

Monitor setpoints on other pathways are routinely set to 1% of the *instantaneous* limit. If multiple pathways become significant, each pathway's permissible release rate is apportioned with the Plant Vent's to ensure the total discharge rate for all release points remains less than the maximum permissible discharge rate.

If necessary, release rates may be apportioned (per 10CFR20 applicability to a site, rather than any one unit) for maximum operational flexibility such that one unit "borrows" routine apportionment from the other unit. This evolution is controlled by station procedures, which require direct communication with the Shift Managers and the Chemistry Department.

1.3 Setpoints for Liquid Effluent Monitors

1.3.1 Liquid Effluent Monitors have setpoints based on limiting the concentrations in the discharge canal to ten times the concentration values in Appendix B, Table 2, Column 2 to 10CFR20 in accordance with 10CFR20.1302(2)(i).

1.3.2 Monitor setpoints are inherently conservative due to the routine use of determining dilution from Circulating Water Pumps at the applicable unit only. In actuality, both Circulating and Service Water systems for the entire site contribute to site dilution.

1.3.3 For monitors that read and alarm in μCi/ml, setpoints are calculated as follows:

$$S = [(ADC)(F)] / [f] = \text{Maximum alarm setpoint in } \mu Ci/ml$$

where:

F = Available discharge canal dilution flow for this release, in gpm

f = calculated allowable release rate in gpm (Section 2.2.6)

ADC = The Allowed Diluted Concentration is the equivalent MPCW for gamma emitting isotopes weighted for total specific activity (both gamma and beta emitters). This term is necessary to correct the MPCW due to the relatively insignificant effect of beta emitters on the radiation monitor, as described in Section 2.2.6.

1.3.4 Alert or Warn setpoints should be used on batch liquid release monitors to ensure the contents of the batch tank have not changed since sampling. The alert setpoint is calculated as follows:

$$AS = (C) * (M)$$

where:

AS = Alert or Warn setpoint in μCi/ml

C = Average monitor reading at time of sample

M = A conservative factor based upon the mixing ratio of two tank volumes and an expected monitor response error term (typically 1.25, coinciding with 25%).

NOTE: Liquid Monitor alert setpoints do not control any auto functions but simply provide indication to the operators. Alert or Warn setpoints for other monitors are typically initially established at approximately 75% of the Alarm value.

TABLE 1 – 1 Unit 2 Effluent Radiation Monitor System Data

CHANNEL	MONITOR DESCRIPTION	SAMPLING LOCATIONS	RANGE	EFFLUENT CONTROL FUNCTIONS
R-42	Containment Gas Monitor	72' Fan Bldg	1E-7 to 1E-2 μCi/cc	Containment Ventilation Isolation
R-44	Plant Vent Radiogas Monitor	88' Fan Bldg	1E-7 to 1E-2 μCi/cc	Shuts RCV-014 (isolating gas tanks), stops VC release fans and shuts VC vent/purge valves.
R-45	Condenser Air Ejector Monitor	In-line detector on the air ejector exhaust header	1E-6 to 1E-1 μCi/cc	Alarm diverts air ejector exhaust to VC and secures steam to priming air ejector re-heaters.
R-50	Waste Gas Disposal System Monitor	98' PAB	0.1 to 1E5 Ci	None. RECS D3.2.6 is assured by setpoint basis per ODCM Part II, Sec 3.1.12.
R-27	Plant Vent Wide-Range Monitor	Drawn from inside Plant Vent, to 85' BAB	1E-7 to1E+5 μCi/cc	None. PV Concentration and release rate information only, for accident applications.
R-60	Unit 1 Stack Vent Radiogas Monitor	Unit 1 Nuclear Services Bldg 100' Elevation	1E-7 to 1E-2 μCi/cc	None
R-46 / 53	Fan Cooler Unit Service Water Return	Adjacent to service water return line from V.C. fan cooler units and motor coolers	1E-7 to 1E-2 μCi/cc	None
R-47	Component Cooling System pump outlet	Adjacent to line monitors on each pump outlet	1E-6 to 1E-2 μCi/ml	None. Setpoints are not based on effluent. They are for ALARA and information only.
R-39 / 40	Component Cooling Heat Exchanger Service Water Monitors	80' PAB	1E-7 to 1E-2 μCi/cc	None
R-54	Waste Disposal Liquid Effluent Monitor	In-line monitor on 70' CSB	1E-7 to 1E-2 μCi/cc	Terminates Distillate Tank releases on alarm
R-49	SG Blowdown Monitor	15' Transformer Yard Housing	1E-6 to 1E+2 μCi/cc	Closes blowdown isolation valves
R-51	Sec Boiler Blowdown Purification	43' Superheater Bldg	1E-7 to 1E-2 μCi/cc	None
R-52	Sec Boiler Blowdown Purification Sys SW	33' Superheater Bldg	1E-7 to 1E-2 μCi/cc	None

TABLE 1 – 2 Unit 3 Effluent Radiation Monitor System Data

CHANNEL	MONITOR DESCRIPTION	SAMPLING LOCATIONS	RANGE	EFFLUENT CONTROL FUNCTIONS
R-12	Containment Gas Monitor	Samples drawn from 32 and 35 Containment Fan Coolers	1E-7 to 1E-1 μCi/cc	Containment Ventilation Isolation
R-14	Plant Vent Radiogas Monitor	In Plant Vent at approximately 105' elevation	1E-6 to 1E-1 μCi/cc	Secures waste gas tank release and Containment Ventilation Isolation
R-15	Condenser Air Ejector Monitor	In-line detector on the air ejector exhaust header	1E-6 to 1E+0 μCi/cc	On alarm, diverts air ejector exhaust to VC and secures steam to priming air ejectors re-heaters
R-20	Waste Gas Disposal System Monitor	Adjacent to line, on suction to waste gas compressors	1E-2 to 1E+3 μCi/cc	None. This setpoint is based on limiting 50,000 Ci per tank, per RECS D3.2.6.
R-27	Plant Vent Wide-Range Monitor	Drawn from inside Plant Vent	1E-7 to 1E+5 μCi/cc	Secure waste gas tank release and Containment Ventilation Isolation
R-46	Administration Building Vent Radiogas Monitor	4th Floor Administration Building Monitor Exhaust Plenum for Controlled Areas	1E+1 to 1E+6 cpm (typically 5.0E-8 to 5.0E-2 μCi/cc)	None
R-59	RAMS Building Vent Radiogas Monitor	55' RAMS Building Monitor Exhaust Plenum	1E-6 to 1E+2 μCi/cc	None
R-16 A/B	Fan Cooler and Motor Cooler Service Water Return	Adjacent to service water return line from V.C. fan cooler units and motor coolers	1E-7 to 1E-1 μCi/cc	None
R-17 A/B	Component Cooling System pump outlet	Adjacent to line monitors on each pump outlet	1E-6 to 1E-1 μCi/ml	None. These setpoints are not based on effluent and are for information only.
R-23	Component Cooling Heat Exchanger Service Water Monitor	Adjacent to line, mounted on SW return from Component Cooling Heat Exchanger	1E-7 to 1E-1 μCi/cc	None
R-18	Waste Disposal Liquid Effluent Monitor	In-line monitor on monitor tank recirc pump discharge	1E-7 to 1E-1 μCi/cc	Terminates monitor tank release on alarm
R-19	SG Blowdown Monitor	PAB blowdown room monitors steam generator blown	1E-6 to 1E+2 μCi/cc	Closes blowdown isolation valves and SG sample valves
R-61	CPF Regen Waste Release Monitor	Recirc line of HTDS/LTDS tanks in CPF (used when primary to secondary leakage exists).	1E-7 to 1E-1 μCi/cc	Terminates HTDS or LTDS tank release. Applicable only in a primary to secondary leak, as defined in RECS D1.1.

2.0 LIQUID EFFLUENTS

2.1 Liquid Effluent Releases - General Information

2.1.1 A completed and properly authorized Liquid Radioactive Waste Permit is required prior to performing any BATCH release (a release of known volume and activity from an isolated source).

2.1.2 All activity determinations for liquid radioactive effluents are performed in such a manner as to be representative of the activity released to the river.

2.1.3 The radioactivity in liquid waste tanks shall be continuously monitored during release except as allowed by RECS D3.3.1. If the flowmeter is inoperable, the flow shall be estimated every four hours by difference in tank level or by discharge pump curves.

2.1.4 Prior to discharge, the radioactive waste tank contents shall be recirculated for at least two tank volumes. After this recirculation, and prior to discharge, a sample shall be taken and analyzed for activity with a portion of the sample set aside for composite analysis. The measured activity shall be used for calculating allowable discharge rate and the alarm setpoint for the liquid waste discharge monitor.

2.1.5 Steam Generators or other CONTINUOUS releases shall be quantified and included in effluent reports, but do not require a pre-release permit. Continuous releases are typically quantified from periodic sampling and the use of radiation monitoring. In Modes 4-6, however, SG Draindowns are typically quantified in BATCH mode.

2.1.6 Assurance that the combined liquid releases from Units 2 and 3 maintain compliance with 10CFR20 is provided by administrative controls which include an administrative minimum dilution of 100,000 gpm for any batch release, and routine use of unit-specific dilution flow for each permitted release.

> Upon agreement between both Shift Managers, however, one unit can reduce or eliminate radioactive liquid waste discharges for a period of time to allow the other unit to use the full site dilution flow, or a specified portion thereof. When applying this shared policy, the Shift Managers require the details and duration of this evolution in writing at both CRS work stations.

2.1.7 Steam Generator Blowdown activity is determined by composite samples collected in a manner to be proportional to the rate of flow of individual steam generator to total steam generator blowdown. These samples are then analyzed for the various radionuclides at frequencies specified in the RECS. Due to appropriate compositing, total blowdown flow is then routinely multiplied by average concentrations to determine the actual effluent contribution from Steam Generator Blowdown.

2.1.8 Time average dose calculations (10CFR50) may use total site dilution flow for both units, with the determined dose contributions additive for a site report over any specified period.

2.1.9 The discharge canal flow rate is determined by the use of pump flow characteristics curves. Actual monthly average flow rates and total gallons of dilution are determined by Programs and Components and delivered to Chemistry on a monthly basis. Unit 2 circulator pumps are operated at either low or high speed (approximately 88,000 to 140,000 gpm). Unit 3 circulator pumps have a variable speed capacity, and can produce a range from 65,000 to 140,000 gpm.

2.1.10 Radioactivity content in outdoor tanks is to be limited to less than 10 curies, excluding tritium and noble gas, as per RECS D3.1.4.. Compliance with this requirement is demonstrated by limiting the radioactive concentration in these tanks to the value which results in 10 curies when the tank is at full liquid capacity, except as modified below. The radioactive concentration limits for these tanks are:

RWST: $$\frac{10\,curies \times 10^6\,\mu Ci/curie}{358{,}500 gal \times 3785 ml/gal} = 7.3 \times 10^{-3}\,\mu Ci/ml$$

PWST: $$\frac{10\,curies \times 10^6\,\mu Ci/curie}{165{,}000 gals \times 3785 ml/gal} = 1.6 \times 10^{-2}\,\mu Ci/ml$$

31 & 32 Monitor Tanks (Unit 3):

$$\frac{10\ curies \times 10^6\,\mu Ci/curie}{11{,}750 gals \times 3785 ml/gal} = 2.2 \times 10^{-1}\,\mu Ci/ml$$

13 & 14 Waste Distillate Storage Tanks (Units 1/2):

$$\frac{10\ \text{curies} \times 10^6\,\mu\text{Ci/curie}}{23{,}577\text{gals} \times 3785\text{ml/gal}} = 1.1 \times 10^{-1}\,\mu\text{Ci/ml}$$

Unit 3's Condensate Polisher High and Low Total Dissolved Solids Tanks:

$$\frac{10\ curies \times 10^6\,\mu Ci/curie}{60{,}000 gals \times 3785 ml/gal} = 4.4 \times 10^{-2}\,\mu Ci/ml$$

Outside Temporary Tanks:

$$\frac{10\ curies \times 10^{-6}\,\mu Ci/curie}{Volume\ (gal) \times 3785 ml/\ gal} = \mu Ci/ml$$

Integrated curies in a tank can similarly be determined by calculating the curies added from known inlet concentrations and volumes, which would then be combined with previously determined tank curie levels.

The refueling water storage tank has the potential to be filled from the reactor cavity with liquid which exceeds the limits stated. Therefore, prior to filling the RWST from the reactor cavity after refueling operations, the reactor cavity (or residual heat removal system) must be sampled for radioactivity and action taken to ensure that the total activity in the tank does not exceed 10 curies.

Outside temporary tanks should not be filled with liquid which could exceed the concentration limit calculated. Therefore, prior to transfer to outside temporary tanks, the source of liquid shall be sampled for radioactivity. If it exceeds the concentration limit calculated, action shall be taken to ensure that the total activity in the tank does not exceed 10 curies.

2.1.11 Turbine hall drains (from sumps in the five foot elevation for units 2 and 3) receive drains from areas containing secondary plant components at sub-atmospheric pressures. These sumps do not meet the intent of a turbine hall drain system as defined in NUREG 0472, however their effluent contribution should be evaluated.

Quantification of effluents is performed on this pathway during a Primary to Secondary Leak , as defined by RECS D1.1. In these cases, releases from this pathway would be quantified by periodic sampling multiplying the source term by a determination of the release rate to the river, generally bounded by secondary system loss or make-up rate.

At elevated Steam Generator activity levels (approximately 1.0E-4 or above), turbine hall drains may require temporary processing, should effluents via this pathway approach the 31-day dose projection limits per RECS D3.1.3. In this case, water at Unit 3 can be directed to the Condensate Polishing Facility prior to release. At Unit 2, a temporary processing skid will need to be applied, or water directed to the Secondary Boiler Blowdown Purification System, or other installed cleanup system.

Activity released via this pathway is determined as follows:

$$\begin{pmatrix}\text{Turbine Hall}\\ \text{Drain}\\ \text{Effluent Activity}\end{pmatrix} = \begin{pmatrix}\text{Feedwater}\\ \text{Specific}\\ \text{Activity}\end{pmatrix} * \begin{pmatrix}\text{Steam Plant}\\ \text{Makeup}\\ \text{Rate}\end{pmatrix} - \begin{pmatrix}\text{SG Blowdown}\\ \text{Rate to the}\\ \text{River}\end{pmatrix}$$

2.1.12 Carbon 14 is released at a rate of .07 curies per GW(e)/yr with an average make up rate of 0.5 gal/min based upon studies performed by the New York State Department of Health. The estimate of Carbon 14 releases are included in the Radiological Impact on Man section of the Annual Radioactive Effluent Release Report. These estimates are not included in dose calculations for routine releases.

2.1.13 Several normally non-radioactive systems are periodically analyzed for radioactivity. Examples include Unit 3's Condensate Polisher regenerant waste tank, the Spent Fuel Pool Auxiliary Heat Exchanger Secondary Cooling Systems (when in use), and Site Storm Drains, etc. The monitoring program for these type of release points is consistent with the direction set forth in NRC IE Bulletin 80-10 "Contamination of Non-radioactive Systems and Resulting Potential for Unmonitored, Uncontrolled Release of Radioactivity to Environment". Should a system become contaminated, releases will be evaluated and quantified (as either batch or continuous) in accordance with the requirements listed in the RECS and the IPEC 80-10 program.

2.1.14 The Unit 3 liquid waste monitor tanks have an airborne release pathway. The original plant design limited the gases through this pathway by reducing the entrained gases to less than 2E-3 μCi/ml. When the entrained gas concentration in the monitor tank inlet exceeds 2E-3 μCi/ml, the noble gas release will be quantified by calculating the difference (in μCi's) between the gaseous activity added to the tank and the gaseous activity present in the effluent release sample. This difference will be the activity released through the tank vents and is quantified as an airborne release.

2.1.15 Due to the addition of Hafnium control rods at Unit 3, an offsite dose may need to be calculated for Hafnium isotopes in waste pathways. In the absence of site-specific bioaccumulation and dose factors for Hafnium, factors for Zirconium are used, as suggested in ICRP 30. Should these calculations become necessary, they will be performed per the following sections, and manually added to other totals.

2.1.16 Investigations from the Radiological Ground Water Monitoring Program (RGWMP) have resulted in a determination of liquid effluent. A quantification and dose assessment of radioactive groundwater and storm water leaving the site shall be performed at least annually. This quantification shall include, as a minimum, the source term from samples obtained near the effluent points of each applicable pathway (eg, ground water wells nearest the site boundary), and a determination of release rate and dilution flow.

Release rates to the river from both the bedrock pathways and collective storm drain pathways are provided from modeling by hydrologists. Initially, a general precipitation mass balance model was applied to assess groundwater flow rates (Reference 32). During calendar year 2007, this model was calibrated usingan independent Darcy's Law model. Future determinations will continue to use a combination of these models at various depths, over effected zones, as discussed in Appendix J, Groundwater Flow and Offsite Dose Calculation Details.

Dilution flow is directly measured in the Discharge Canal, for any water directed there. For storm or groundwater reaching the Hudson via a direct path under the canal, a dilution factor equivalent to a 6-hour half-tidal surge in the effected area of the Hudson is applied. As discussed in Reference 33, this dilution is equivalent to 5.83E10 gallons per year, or 1.11E5 gallons per minute.

Dose calculations are otherwise then completed per the following sections.

2.2 Liquid Effluent Concentrations

2.2.1 This section provides a description of the means that will be used to demonstrate compliance with the RECS D3.1.1.

2.2.2 Compliance with the instantaneous limits of 10CFR20 is achieved by allocating dilution flow on a per unit basis, as described in Section 2.1.6. Compliance with 10CFR50 (quarterly and annual limitations) is assured by completing a monthly report which summarizes the time-average releases from the site.

2.2.3 Each isolated liquid waste tank must be recirculated for at least two tank volumes prior to sampling in order to ensure a representative sample is obtained. At Unit 2, this duration is determined from station procedures with every batch release. At Unit 3, a default minimum recirculation time of 4 hours may be used for 31 and 32 monitor tanks in lieu of the actual calculation:

$$\frac{11750\ gals * 2\ Tank\ Volumes}{100\ gal/\min} = 3.9\ Hours \approx 4\ Hours$$

Note: Nominal monitor tank pump flow rate is approximately 135 gpm. For conservativism however, 100 gpm is used for the recirculation flow rate, while 150 gpm is used for the discharge flow rate in all release calculations.

2.2.4 For batch releases, the concentration in liquid effluents prior to dilution in the discharge canal is determined by sampling prior to release. For continuous releases, the concentrations can be determined by either grab sampling, or by direct reading radiation monitor. If the process radiation monitor is utilized, the conversion factor should be verified as appropriate for the mixture being released.

For non-direct reading monitors, the following calculation is used:

$$C = CF * CR$$

C = Concentration of liquid effluent (uCi/ml) prior to dilution

CF = Conversion factor of monitor (uCi/ml per net cpm)

CR = Count rate of monitor (in net cpm)

2.2.5 The final diluted concentration in the canal is determined as follows:

$$CD = (C) * (f) / (F)$$

Where:

CD = Diluted concentration in the discharge canal in uCi/ml

C = Pre-dilution liquid concentration in uCi/ml

F = Dilution flow in the discharge canal in gal/min

f = Release rate of liquid effluent in gal/min

2.2.6 <u>Calculation of Maximum Permissible Concentration in Liquid Effluents</u>

a. This section describes the methodology used to ensure compliance with RECS D3.1.1. The discharge canal concentration of radionuclides must be maintained less than those identified as limits (10 times the EC's of 10CFR20). The noble gas limit has been specified as 2E-4 uCi/ml.

These criteria are normally assured by using an ***Allowed Diluted Concentration*** (ADC) on each discrete release. This differs from the ECs given in 10CFR20 Appendix B in that, for radioisotopes that do not have gammas greater than 60 kev emitted during decay, default values are included to estimate their contribution.

The Allowed Diluted Concentration is derived and calculated as follows:

$$ADC = \frac{MPCWt * CG}{Totalactivity} \quad \text{or} \quad ADC = \frac{MPCWt * CG}{CG + CB} \quad \text{or} \quad ADC = \frac{MPCWt}{1 + CB/CG}$$

where:

ADC = Allowed diluted concentration in uCi/ml

MPCWt = Maximum permissible concentration in water for all isotopes (beta & gamma), in uCi/ml, as defined in RECS, D1.1, as follows:

$$MPCWt = \frac{\sum_i Ci}{\sum_i \left\langle Ci / MPCWi \right\rangle}$$

Ci and MPCWi = Concentration and MPCW for each isotope

CB = The concentration of the non gamma emitters, in uCi/ml

CG = The concentration of the gamma emitters, in uCi/ml

b. A representative sample must be obtained. For batch releases, at least two tank volumes are recirculated after the tank has been isolated to meet these requirements. The minimum recirculation time is determined as follows:

T = 2 (V) / (G) where;

T = Minimum recirculation time in min

V = Volumes in the tank to be discharged, in gal

G = Recirculation rate in gal/min

c. After the tank has been sampled, the Allowed Diluted Concentration is determined, per the equations above.

d. A determination of other liquid radioactive discharges is evaluated. If other releases are in progress at an affected unit, the radioactive concentrations and discharge rates are included to determine a potentially new required dilution factor.

e. Available dilution flow may be adjusted by physically using more pumps or altering an allocation fraction. Additionally, if required, release rate can be adjusted to comply with diluted concentration limits with existing dilution flow. Typically, however, these measures are not required.

f. The required dilution flow is calculated as follows:

$$E = \frac{Dr * CG}{ADC}$$ where;

Dr = Current release discharge rate, gpm

E = Required dilution for current existing release(s), gpm

CG and ADC are defined in Section 2.2.6.a

g. The permissible discharge rate is calculated as follows:

$$D = \frac{ADC * B}{CG}$$

Where:

D = Permissible discharge rate in gal/min

ADC = Calculated and described in Step 2.2.6.a

CG = Gamma emitter concentration in μCi/ml

B = Adjusted dilution flow from the unit, in gpm, from Step 2.2.6.d, above, as follows:

$$B = \begin{pmatrix}\text{Available}\\ \text{Dilution}\\ \text{Flow}\end{pmatrix} - \begin{pmatrix}\text{Required}\\ \text{Dilution from}\\ \text{other releases, E}\end{pmatrix}$$

Note: With no "other" releases, *B* simply becomes the *Available Dilution Flow*.

2.3 Liquid Effluent Dose Calculation Requirements

2.3.1 RECS D3.1.2 requires that the dose or dose commitment above background to an individual in an unrestricted area from radioactive materials in liquid effluents released from each reactor unit shall be limited:

a) During any calendar quarter: Less than or equal to 1.5 mrem to the total body and to less than or equal to 5 mrem to any organ.

b) During any calendar year: Less than or equal to 3 mrem to the total body and to less than or equal to 10 mrem to any organ.

c) If either of the above limits is exceeded by a factor of two or more, then cumulative dose contributions from direct radiation would be determined by evaluation of existing perimeter and environmental TLDs per RECS D3.4.1.

2.3.2 RECS D3.1.3 requires that appropriate portions of the radwaste treatment system be used to reduce the radioactive material in liquid waste prior to their discharge when the projected dose due to liquid effluent from each reactor unit when averaged over 31 days, would exceed 0.06 mrem to the total body or 0.2 mrem to any organ. Doses due to liquid release shall be projected at least once per 31 days. These doses are projected based on the dose methodology in Section 2.4. or 2.5. The average of previous months' doses is used to project future dose, as follows:

$$\begin{bmatrix}\text{Dose}\\ \text{Projection}\end{bmatrix} = \frac{\text{Current Month Dose} + \text{Previous months' Dose}}{\text{number of months used}} \pm \begin{bmatrix}\textit{major}\\ \textit{planned}\\ \textit{evolutions}\end{bmatrix}$$

The term for planned evolutions is routinely determined from previous similar evolutions, such as releases associated with plant shutdown.

2.4 Dose Methodology (Computer Calculation)

2.4.1 NUREG 0133 (Ref. 1, Section 4.3, Pg. 14) states that cumulative dose contributions should consider the dose contribution from the maximum exposed individual's consumption of fish, invertebrates, and potable water as appropriate. The river near IPEC is considered to be fresh water when in reality it is a tidal estuary and never completely fresh. Observed average chlorosity at IPEC has ranged as high as 2.5 gm/liter or about 13% sea water and 87% fresh water.

Hence, use of the Hudson River for fresh water supply purposes is precluded south of Chelsea (mile point 65) which is the nearest point of potable water supply (approximately 15 miles upstream of IPEC). Radionuclide concentrations in the nearest water supply have been calculated (Ref. 2) to be a factor of at least 500 lower than the river water in the Indian Point area.

Due to the absence of a potable water pathway, RECS D3.1.2 reporting regulations for a 3 mile downstream limit do not apply. There is no exposures from ingestion of drinking water.

Thus, at IPEC, the cumulative dose considers only the dose contributions from the maximum exposed individuals consumption of fish and invertebrates. Tables of dose factors for three age groups were developed as per Section 2.4.3 and are included as Tables 2-1, 2-2, and 2-3. (Infant dose factors are 0 and are not included).

2.4.2 The relationships and methods that form the calculational base for dose accounting for the liquid effluent pathway are described in this section. These relationships can be used to meet the calculational requirements of Section 2.3.1. The cumulative dose factors (Ait) are calculated in Section 2.4.3. The following equation is generally applicable and can be used for any number of isotopes released over a time period:

$$D(T) = \sum_{i=1}^{m} [A_{iT} * \sum_{k=1}^{n} (dt_k)(C_{ik})(F_k)]$$

Where:

m = The total number of isotopes released.

D(T) = The liquid effluent cumulative dose commitment from nuclides to the total body or any organ, T, for the time period k, in mrem.

dt_k = The length of the time period, k over which C_{ik} and F_k are averaged for all liquid releases, in hours. (This can be individual release durations summed, or an entire period duration, defined with each application of this equation.)

C_{ik} = The undiluted liquid effluent average concentration of nuclide, i, in uCi/ml, during time period dt_k from any liquid release.

n = The total number of releases considered.

A_{iT} = The site related ingestion dose commitment factor to the total body or any organ for each identified principal gamma and beta emitter listed in Table 2-1, 2-2, and 2-3, in mrem-ml per hr-uCi.

F_k = The total dilution factor for C_{ik} during any liquid effluent releases; defined as the ratio of the maximum undiluted liquid waste flow during release to the average flow from the site discharge structure to unrestricted receiving waters, times an applicable factor.

The term C_{ik} represents the total undiluted concentration of radioactive material in liquid waste at the release point as determined by the radioactive liquid waste sampling and analysis program as contained in the RECS. All dilution factors beyond the sample point are included in the F_k and A_{iT} terms.

The term F_k is a total dilution factor and is determined as follows:

$$F_k = \frac{\text{Liquid Radioactive Waste Flow}}{[\text{Discharge Structure Exit Flow} * \text{Applicable Factor}]}$$

The liquid radioactive waste flow is the flow from all continuous and batch radioactive effluent releases specified in the RECS from all liquid radioactive waste management systems. The discharge structure exit flow is the average flow during disposal from the discharge structure release point into the receiving body of water. Based on studies by New York University Medical Center (ref. 14 page 7), the appropriate "Applicable Factor" (a mixing factor in the near field), is **5.0**.

For permitting and initial assessment of liquid effluent releases, F_k is first determined with dilution flow concurrent with applicable releases (see Section 2.2). Doses are later recalculated (for the entire site) on a quarterly basis to determine actual doses from quarterly total site dilution volume. This method allows both an immediate and accurate long-term assessment of radiation dose resulting from liquid effluent releases at Indian Point.

2.4.3 Dose Factor for Liquid Effluent Calculations

The equation for dose from liquid effluents requires the use of a dose factor A_{iT} for each nuclide, i, which embodies the dose factors, pathway transfer factor, pathway usage factors, and dilution factors for the points of pathway origin.

IPEC follows the guidance of NUREG 0133 and has calculated A_{iT} for the total body and critical organ of the maximum exposed individual for Adult, Teen and Child doses. Most factors needed in the equation were obtained from Regulatory Guide 1.109 with the following exceptions (see Section 2.6 and Ref 2, 12, 13, 14, and 25):

The fish and invertebrate bioaccumulation factors (BF_i and BI_i) for Cesium, Niobium, Silver, and Antimony, were determined locally.

For Cesium, a site specific factor of 224 was used instead of the 2,000 presented in Table A-1 of the Regulatory Guide for fish. Similarly, a factor of 224 was used for invertebrates instead of the Regulatory Guide value of 1000.

For Silver, the fish and invertebrate factors are 2.3 and 3300, respectively.

For Niobium, the fish and invertebrate factors are 300 and 100 respectively.

For Antimony, the fish and invertebrate factors are 1 and 300 respectively.

The summary dose factor is as follows:

$$A_{iT} = K[(UF)BF_i + (UI)BI_i]Df$$

Where:

A_{iT} = Composite dose parameter for the total body or critical organ for nuclide, i, for all appropriate pathways, mrem/hr per μCi/ml.

K = Units conversion factor, 114155 = $\frac{(1E6pCi/\mu Ci) * (1E3ml/kg)}{8760\ hr/yr}$

UF = kg/yr fish consumption from Table E-5 of Reg Guide 1.109:

21 Adult	6.9 Child
16 Teen	0 Infant

BFi = Fresh Water Fish Bioaccumulation factor for nuclide, i, in pCi/kg per pCi/l from Table A-1 of Regulatory Guide 1.109.

UI = kg/yr invertebrate consumption from Table E-5 of Regulatory Guide 1.109:

5.0 Adult	1.7 Child
3.8 Teen	0 Infant

BIi = Salt Water Invertebrates Bioaccumulation factor for nuclide, i, in pCi/kg per pCi/l from Table A-1 of Regulatory Guide 1.109.

DF_i = Dose conversion factor for nuclide i, for age groups in pre-selected organs, T, in mrem/pCi, from Tables E-11, 12 & 13 of Regulatory Guide 1.109.

IPEC has compiled A_{iT} factors for 3 age groups and various organs for the maximum exposed individual. These are included as Table 2-1, 2-2, and 2-3. For completeness, this table includes all isotopes found in Reg Guide 1.109, however, several isotopes listed are not routinely identified at IPEC. In addition, the values for Antimony, Silver, Cesium, and Niobium are site specific as previously discussed.

2.5 Backup Simplified Dose Methodology

2.5.1 An alternate computer method which completely complies with Section 2.4 is available should the primary computer system be inoperable.

2.5.2 Hand Calculations which completely comply with Section 2.4 can be employed if the primary and secondary computer codes are inoperable. Because they are time consuming and subject to calculational errors, procedural guidance in the actual flow of calculations should be used to maintain a standard format. These procedures are also used for benchmark tests of the computer codes.

2.6 Site Specific Bio-Accumulation & Dose Factors

2.6.1 As stated in Section 2.4.3 the bioaccumulation factor (BF_i) for Cesium in fish is assumed to be 224 instead of the 2000 listed in Regulatory Guide 1.109 (Ref. 3). Similarly, the bioaccumulation factor for invertebrates is 224. This is based on three facts; 1) the Hudson River at IPEC is not completely fresh, 2) the Bioaccumulation Factor for salt water is 40 (Ref. 2), and 3) the behavior of Cesium in the Hudson is a complex phenomenon, as discussed below.

The NYU Study (Ref. 2) shows that Cesium concentrations in fish are regulated at a relatively constant value independent of the concentration of Cesium in water, and the bioaccumulation factors are thus inversely proportional to the water concentration of Cesium. This explains the lower bioaccumulation factor for Cesium reported by numerous investigators for salt water fish as opposed to fresh water fish because of the higher stable Cesium content of sea water. The NYU Report states that water at Indian Point has a dissolved Cesium concentration which is much higher than would be expected from simple mixing between sea water and fresh water and postulates that these higher concentrations result from leaching of Cesium from bottom sediment by saline water.

Use of the bioaccumulation factors of Regulatory Guide 1.109 for a fresh water site will thus substantially overestimate fish ingestion doses because no account is taken of the phenomena just discussed. However, radio-cesium concentrations in fish may still be estimated through the use of a bioaccumulation factor, provided that this factor is determined from the body of water of interest. This factor has been estimated (Ref. 12, page 33) to be about 224 for the flesh of indigenous fish caught in the Indian Point area. In contrast, the Cesium fresh water bioaccumulation factor presented by Regulatory Guide 1.109 for fish is 2000.

Fish ingestion doses would therefore be overestimated by a factor of 13 if the Regulatory Guide values were used.

Similarly for invertebrates, the site specific bioaccumulation factor of 224 is used. This is larger than the value of 25 given in Reg Guide 1.109 for salt water invertebrates.

A second conservatism in the NRC model concerns the location at which the concentrations in the river of the discharged Cesium are evaluated. Use of this model implies that these fish have grown directly in such a location prior to being caught, which is unrealistic and adds about a factor of five in conservation. This conservatism remains in the calculation, thus the use of the NYU (Ref. 12) bioaccumulation factor is justifiable.

2.6.2 No bioaccumulation factor for Silver is listed in Rev. 1 of Regulatory Guide 1.109, Table A-1. The values of 2.3 and 5000 for fish and invertebrates were obtained from ORNL-4992 (sponsored by ERDA 660, Ref. 25) and are included in the ODCM in the interests of increased accuracy since Ag-110m is a potential component of IPEC liquid releases.

2.6.3 International Atomic Energy Agency Report No. 57 provides data more recent than that presented in Regulatory Guide 1.109 for niobium bioaccumulation factors. The factor in the Regulatory Guide appears to be substantially over-conservative and, therefore, the more recent IAEA information is incorporated into the dose calculation methodology for liquid releases of radio-niobium. The values from Table XVII of IAEA No. 57 are 300 and 100 for freshwater fish and marine invertebrates respectively and are incorporated into this ODCM.

2.6.4 Antimony isotopes are not listed in Reg. Guide 1.109. As for Niobium above, IAEA Report No. 57 was used to provide bioaccumulation factors for the Antimony isotopes in Table 2-1. Dose factors were calculated for Antimony as per Reference 13.

2.6.5 Te-123m dose factors are not listed in Reg. Guide 1.109. Since this isotope is identified from potentially failed secondary startup sources and previously identified at IPEC, ingestion dose factors were derived from ICRP 30 and calculated per Ref 34.

2.6.6 In summary, with the exception of the bioaccumulation and dose factors discussed above, all remaining factors applied at IPEC are defined in Reg Guide 1.109 for a combination of fresh water fish and salt water invertebrates.

Table 2 - 1

Site Related Adult Ingestion Dose Commitment Factors
(Freshwater Fish and Saltwater Invertebrate Consumption)

(AiT)
mR/hr per uCi/ml

ISOTOPE	BONE	LIVER	TOT BODY	THYROID	KIDNEY	LUNG	GI-LLI
H-3	0.00E+00	2.82E-01	2.82E-01	2.82E-01	2.82E-01	2.82E-01	2.82E-01
BE-7	3.29E-01	7.45E-01	3.69E-01	0.00E+00	7.83E-01	0.00E+00	1.28E+02
NA-24	4.08E+02	4.08E+02	4.08E+02	4.08E+02	4.08E+02	4.08E+02	4.08E+02
P-32	4.96E+07	3.08E+06	1.92E+06	0.00E+00	0.00E+00	0.00E+00	5.57E+06
CR-51	0.00E+00	0.00E+00	4.31E+00	2.58E+00	9.50E-01	5.72E+00	1.08E+03
MN-54	0.00E+00	5.43E+03	1.04E+03	0.00E+00	1.61E+03	0.00E+00	1.66E+04
MN-56	0.00E+00	1.37E+02	2.42E+01	0.00E+00	1.73E+02	0.00E+00	4.36E+03
FE-55	3.21E+04	2.21E+04	5.16E+03	0.00E+00	0.00E+00	1.24E+04	1.27E+04
FE-59	5.06E+04	1.19E+05	4.56E+04	0.00E+00	0.00E+00	3.32E+04	3.96E+05
CO-58	0.00E+00	5.15E+02	1.15E+03	0.00E+00	0.00E+00	0.00E+00	1.04E+04
CO-60	0.00E+00	1.48E+03	3.26E+03	0.00E+00	0.00E+00	0.00E+00	2.78E+04
NI-63	4.97E+04	3.45E+03	1.67E+03	0.00E+00	0.00E+00	0.00E+00	7.19E+02
NI-65	2.02E+02	2.62E+01	1.20E+01	0.00E+00	0.00E+00	0.00E+00	6.65E+02
CU-64	0.00E+00	9.08E+01	4.26E+01	0.00E+00	2.29E+02	0.00E+00	7.74E+03
ZN-65	1.61E+05	5.13E+05	2.32E+05	0.00E+00	3.43E+05	0.00E+00	3.23E+05
ZN-69	3.43E+02	6.57E+02	4.57E+01	0.00E+00	4.27E+02	0.00E+00	9.87E+01
BR-83	0.00E+00	0.00E+00	4.05E+01	0.00E+00	0.00E+00	0.00E+00	5.84E+01
BR-84	0.00E+00	0.00E+00	5.25E+01	0.00E+00	0.00E+00	0.00E+00	4.13E-04
BR-85	0.00E+00	0.00E+00	2.16E+00	0.00E+00	0.00E+00	0.00E+00	0.00E+00
RB-86	0.00E+00	1.01E+05	4.72E+04	0.00E+00	0.00E+00	0.00E+00	2.00E+04
RB-88	0.00E+00	2.91E+02	1.54E+02	0.00E+00	0.00E+00	0.00E+00	4.02E-09
RB-89	0.00E+00	1.93E+02	1.35E+02	0.00E+00	0.00E+00	0.00E+00	1.12E-11
SR-89	2.57E+04	0.00E+00	7.37E+02	0.00E+00	0.00E+00	0.00E+00	4.12E+03
SR-90	6.32E+05	0.00E+00	1.55E+05	0.00E+00	0.00E+00	0.00E+00	1.82E+04
SR-91	4.72E+02	0.00E+00	1.91E+01	0.00E+00	0.00E+00	0.00E+00	2.25E+03
SR-92	1.79E+02	0.00E+00	7.75E+00	0.00E+00	0.00E+00	0.00E+00	3.55E+03
Y-90	6.07E+00	0.00E+00	1.63E-01	0.00E+00	0.00E+00	0.00E+00	6.43E+04
Y-91M	5.73E-02	0.00E+00	2.22E-03	0.00E+00	0.00E+00	0.00E+00	1.68E-01
Y-91	8.89E+01	0.00E+00	2.38E+00	0.00E+00	0.00E+00	0.00E+00	4.89E+04
Y-92	5.33E-01	0.00E+00	1.56E-02	0.00E+00	0.00E+00	0.00E+00	9.33E+03
Y-93	1.69E+00	0.00E+00	4.67E-02	0.00E+00	0.00E+00	0.00E+00	5.36E+04
ZR-95	1.63E+00	5.22E-01	3.54E-01	0.00E+00	8.20E-01	0.00E+00	1.66E+03
ZR-97	9.00E-02	1.82E-02	8.30E-03	0.00E+00	2.74E-02	0.00E+00	5.63E+03
NB-95	4.83E+00	2.69E+00	1.44E+00	0.00E+00	2.65E+00	0.00E+00	1.63E+04
MO-99	0.00E+00	1.28E+02	2.43E+01	0.00E+00	2.90E+02	0.00E+00	2.97E+02
TC-99M	1.59E-02	4.50E-02	5.73E-01	0.00E+00	6.84E-01	2.21E-02	2.66E+01
TC-101	1.64E-02	2.36E-02	2.32E-01	0.00E+00	4.25E-01	1.21E-02	7.09E-14
RU-103	1.10E+02	0.00E+00	4.74E+01	0.00E+00	4.20E+02	0.00E+00	1.28E+04
RU-105	9.16E+00	0.00E+00	3.62E+00	0.00E+00	1.18E+02	0.00E+00	5.60E+03
RU-106	1.64E+03	0.00E+00	2.07E+02	0.00E+00	3.16E+03	0.00E+00	1.06E+05
AG-110M	4.58E+02	4.23E+02	2.51E+02	0.00E+00	8.32E+02	0.00E+00	1.73E+05
SB-122	3.47E+01	7.99E-01	1.20E+01	5.38E-01	0.00E+00	2.08E+01	1.32E+04
SB-124	4.86E+02	9.20E+00	1.91E+02	1.18E+00	0.00E+00	3.79E+02	1.38E+04
SB-125	3.11E+02	3.47E+00	7.40E+01	3.16E-01	0.00E+00	2.40E+02	3.42E+03

Table 2 - 1

Site Related Adult Ingestion Dose Commitment Factors
(Freshwater Fish and Saltwater Invertebrate Consumption)

(AiT)
mR/hr per uCi/ml

ISOTOPE	BONE	LIVER	TOT BODY	THYROID	KIDNEY	LUNG	GI-LLI
TE-125M	2.72E+03	9.87E+02	3.65E+02	8.19E+02	1.11E+04	0.00E+00	1.09E+04
TE-127M	6.88E+03	2.46E+03	8.38E+02	1.76E+03	2.79E+04	0.00E+00	2.31E+04
TE-127	1.12E+02	4.01E+01	2.42E+01	8.28E+01	4.55E+02	0.00E+00	8.82E+03
TE-129M	1.17E+04	4.36E+03	1.85E+03	4.01E+03	4.88E+04	0.00E+00	5.88E+04
TE-129	3.19E+01	1.20E+01	7.77E+00	2.45E+01	1.34E+02	0.00E+00	2.41E+01
TE-131M	1.76E+03	8.60E+02	7.16E+02	1.36E+03	8.71E+03	0.00E+00	8.53E+04
TE-131	2.00E+01	8.36E+00	6.32E+00	1.65E+01	8.77E+01	0.00E+00	2.83E+00
TE-132	2.56E+03	1.66E+03	1.55E+03	1.83E+03	1.60E+04	0.00E+00	7.83E+04
I-130	4.88E+01	1.44E+02	5.68E+01	1.22E+04	2.24E+02	0.00E+00	1.24E+02
I-131	2.68E+02	3.84E+02	2.20E+02	1.26E+05	6.58E+02	0.00E+00	1.01E+02
I-132	1.31E+01	3.50E+01	1.23E+01	1.23E+03	5.58E+01	0.00E+00	6.58E+00
I-133	9.16E+01	1.59E+02	4.86E+01	2.34E+04	2.78E+02	0.00E+00	1.43E+02
I-134	6.84E+00	1.86E+01	6.64E+00	3.22E+02	2.95E+01	0.00E+00	1.62E-02
I-135	2.86E+01	7.48E+01	2.76E+01	4.93E+03	1.20E+02	0.00E+00	8.45E+01
CS-134	4.14E+04	9.84E+04	8.04E+04	0.00E+00	3.18E+04	1.06E+04	1.72E+03
CS-136	4.33E+03	1.71E+04	1.23E+04	0.00E+00	9.51E+03	1.30E+03	1.94E+03
CS-137	5.30E+04	7.25E+04	4.75E+04	0.00E+00	2.46E+04	8.18E+03	1.40E+03
CS-138	3.67E+01	7.25E+01	3.59E+01	0.00E+00	5.33E+01	5.26E+00	3.09E-04
BA-139	6.47E+00	4.61E-03	1.89E-01	0.00E+00	4.31E-03	2.61E-03	1.15E+01
BA-140	1.35E+03	1.70E+00	8.87E+01	0.00E+00	5.78E-01	9.73E-01	2.79E+03
BA-141	3.14E+00	2.37E-03	1.06E-01	0.00E+00	2.21E-03	1.35E-03	1.48E-09
BA-142	1.42E+00	1.46E-03	8.93E-02	0.00E+00	1.23E-03	8.27E-04	2.00E-18
LA-140	1.58E+00	7.95E-01	2.10E-01	0.00E+00	0.00E+00	0.00E+00	5.83E+04
LA-142	8.07E-02	3.67E-02	9.15E-03	0.00E+00	0.00E+00	0.00E+00	2.68E+02
CE-141	3.23E+00	2.18E+00	2.48E-01	0.00E+00	1.01E+00	0.00E+00	8.35E+03
CE-143	5.69E-01	4.21E+02	4.66E-02	0.00E+00	1.85E-01	0.00E+00	1.57E+04
CE-144	1.68E+02	7.04E+01	9.04E+00	0.00E+00	4.17E+01	0.00E+00	5.69E+04
PR-143	5.80E+00	2.33E+00	2.88E-01	0.00E+00	1.34E+00	0.00E+00	2.54E+04
PR-144	1.90E-02	7.88E-03	9.65E-04	0.00E+00	4.45E-03	0.00E+00	2.73E-09
ND-147	3.97E+00	4.59E+00	2.74E-01	0.00E+00	2.68E+00	0.00E+00	2.20E+04
W-187	2.98E+02	2.49E+02	8.71E+01	0.00E+00	0.00E+00	0.00E+00	8.16E+04
NP-239	3.53E-02	3.47E-03	1.91E-03	0.00E+00	1.08E-02	0.00E+00	7.12E+02
K-40	0.00E+00	0.00E+00	0.00E+00	0.00E+00	0.00E+00	0.00E+00	0.00E+00
CO-57	0.00E+00	1.21E+02	2.01E+02	0.00E+00	0.00E+00	0.00E+00	3.07E+03
SR-85	0.00E+00	0.00E+00	0.00E+00	0.00E+00	0.00E+00	0.00E+00	0.00E+00
Y-88	0.00E+00	0.00E+00	0.00E+00	0.00E+00	0.00E+00	0.00E+00	0.00E+00
NB-94	0.00E+00	0.00E+00	0.00E+00	0.00E+00	0.00E+00	0.00E+00	0.00E+00
NB-97	4.05E-02	1.02E-02	3.74E-03	0.00E+00	1.20E-02	0.00E+00	3.78E+01
CD-109	0.00E+00	0.00E+00	0.00E+00	0.00E+00	0.00E+00	0.00E+00	0.00E+00
SN-113	0.00E+00	0.00E+00	0.00E+00	0.00E+00	0.00E+00	0.00E+00	0.00E+00
BA-133	0.00E+00	0.00E+00	0.00E+00	0.00E+00	0.00E+00	0.00E+00	0.00E+00
TE-134	3.29E+01	2.15E+01	1.32E+01	2.88E+01	2.08E+02	0.00E+00	3.65E-02
CE-139	0.00E+00	0.00E+00	0.00E+00	0.00E+00	0.00E+00	0.00E+00	0.00E+00
HG-203	0.00E+00	0.00E+00	0.00E+00	0.00E+00	0.00E+00	0.00E+00	0.00E+00

Table 2 - 2

Site Related Teen Ingestion Dose Commitment Factors
(Freshwater Fish and Saltwater Invertebrate Consumption)

(AiT)
mR/hr per uCi/ml

ISOTOPE	BONE	LIVER	TOT BODY	THYROID	KIDNEY	LUNG	GI-LLI
H-3	0.00E+00	2.17E-01	2.17E-01	2.17E-01	2.17E-01	2.17E-01	2.17E-01
BE-7	3.58E-01	8.02E-01	4.01E-01	0.00E+00	8.50E-01	0.00E+00	9.76E+01
NA-24	4.20E+02	4.20E+02	4.20E+02	4.20E+02	4.20E+02	4.20E+02	4.20E+02
P-32	5.40E+07	3.35E+06	2.09E+06	0.00E+00	0.00E+00	0.00E+00	4.54E+06
CR-51	0.00E+00	0.00E+00	4.44E+00	2.47E+00	9.73E-01	6.34E+00	7.46E+02
MN-54	0.00E+00	5.33E+03	1.06E+03	0.00E+00	1.59E+03	0.00E+00	1.09E+04
MN-56	0.00E+00	1.43E+02	2.54E+01	0.00E+00	1.81E+02	0.00E+00	9.40E+03
FE-55	3.35E+04	2.37E+04	5.54E+03	0.00E+00	0.00E+00	1.51E+04	1.03E+04
FE-59	5.20E+04	1.21E+05	4.69E+04	0.00E+00	0.00E+00	3.83E+04	2.87E+05
CO-58	0.00E+00	5.10E+02	1.18E+03	0.00E+00	0.00E+00	0.00E+00	7.04E+03
CO-60	0.00E+00	1.48E+03	3.32E+03	0.00E+00	0.00E+00	0.00E+00	1.92E+04
NI-63	5.15E+04	3.64E+03	1.75E+03	0.00E+00	0.00E+00	0.00E+00	5.79E+02
NI-65	2.18E+02	2.79E+01	1.27E+01	0.00E+00	0.00E+00	0.00E+00	1.51E+03
CU-64	0.00E+00	9.53E+01	4.48E+01	0.00E+00	2.41E+02	0.00E+00	7.39E+03
ZN-65	1.46E+05	5.07E+05	2.36E+05	0.00E+00	3.24E+05	0.00E+00	2.15E+05
ZN-69	3.73E+02	7.10E+02	4.97E+01	0.00E+00	4.64E+02	0.00E+00	1.31E+03
BR-83	0.00E+00	0.00E+00	4.41E+01	0.00E+00	0.00E+00	0.00E+00	0.00E+00
BR-84	0.00E+00	0.00E+00	5.55E+01	0.00E+00	0.00E+00	0.00E+00	0.00E+00
BR-85	0.00E+00	0.00E+00	2.34E+00	0.00E+00	0.00E+00	0.00E+00	0.00E+00
RB-86	0.00E+00	1.09E+05	5.12E+04	0.00E+00	0.00E+00	0.00E+00	1.61E+04
RB-88	0.00E+00	3.12E+02	1.66E+02	0.00E+00	0.00E+00	0.00E+00	2.67E-05
RB-89	0.00E+00	2.01E+02	1.42E+02	0.00E+00	0.00E+00	0.00E+00	3.09E-07
SR-89	2.79E+04	0.00E+00	8.00E+02	0.00E+00	0.00E+00	0.00E+00	3.33E+03
SR-90	5.27E+05	0.00E+00	1.30E+05	0.00E+00	0.00E+00	0.00E+00	1.48E+04
SR-91	5.12E+02	0.00E+00	2.04E+01	0.00E+00	0.00E+00	0.00E+00	2.32E+03
SR-92	1.94E+02	0.00E+00	8.25E+00	0.00E+00	0.00E+00	0.00E+00	4.93E+03
Y-90	6.57E+00	0.00E+00	1.77E-01	0.00E+00	0.00E+00	0.00E+00	5.42E+04
Y-91M	6.18E-02	0.00E+00	2.36E-03	0.00E+00	0.00E+00	0.00E+00	2.92E+00
Y-91	9.64E+01	0.00E+00	2.58E+00	0.00E+00	0.00E+00	0.00E+00	3.95E+04
Y-92	5.80E-01	0.00E+00	1.68E-02	0.00E+00	0.00E+00	0.00E+00	1.59E+04
Y-93	1.84E+00	0.00E+00	5.03E-02	0.00E+00	0.00E+00	0.00E+00	5.61E+04
ZR-95	1.68E+00	5.29E-01	3.64E-01	0.00E+00	7.78E-01	0.00E+00	1.22E+03
ZR-97	9.65E-02	1.91E-02	8.80E-03	0.00E+00	2.90E-02	0.00E+00	5.17E+03
NB-95	4.86E+00	2.70E+00	1.48E+00	0.00E+00	2.61E+00	0.00E+00	1.15E+04
MO-99	0.00E+00	1.36E+02	2.60E+01	0.00E+00	3.12E+02	0.00E+00	2.44E+02
TC-99M	1.63E-02	4.55E-02	5.89E-01	0.00E+00	6.77E-01	2.52E-02	2.98E+01
TC-101	1.77E-02	2.51E-02	2.47E-01	0.00E+00	4.55E-01	1.53E-02	4.30E-09
RU-103	1.15E+02	0.00E+00	4.93E+01	0.00E+00	4.06E+02	0.00E+00	9.63E+03
RU-105	9.85E+00	0.00E+00	3.82E+00	0.00E+00	1.24E+02	0.00E+00	7.96E+03
RU-106	1.77E+03	0.00E+00	2.23E+02	0.00E+00	3.42E+03	0.00E+00	8.50E+04
AG-110M	4.45E+02	4.22E+02	2.56E+02	0.00E+00	8.04E+02	0.00E+00	1.18E+05
SB-122	4.35E+01	8.47E-01	1.27E+01	5.53E-01	0.00E+00	2.72E+01	9.13E+03
SB-124	5.09E+02	9.40E+00	1.99E+02	1.16E+00	0.00E+00	4.45E+02	1.03E+04
SB-125	3.27E+02	3.58E+00	7.64E+01	3.11E-01	0.00E+00	2.85E+02	2.53E+03

Table 2 - 2

Site Related Teen Ingestion Dose Commitment Factors
(Freshwater Fish and Saltwater Invertebrate Consumption)

(AiT)
mR/hr per uCi/ml

ISOTOPE	BONE	LIVER	TOT BODY	THYROID	KIDNEY	LUNG	GI-LLI
TE-125M	2.96E+03	1.07E+03	3.96E+02	8.28E+02	0.00E+00	0.00E+00	8.75E+03
TE-127M	7.48E+03	2.65E+03	8.90E+02	1.78E+03	3.03E+04	0.00E+00	1.87E+04
TE-127	1.22E+02	4.33E+01	2.63E+01	8.44E+01	4.95E+02	0.00E+00	9.44E+03
TE-129M	1.26E+04	4.68E+03	2.00E+03	4.07E+03	5.28E+04	0.00E+00	4.74E+04
TE-129	3.47E+01	1.29E+01	8.44E+00	2.48E+01	1.46E+02	0.00E+00	1.90E+02
TE-131M	1.89E+03	9.06E+02	7.55E+02	1.36E+03	9.44E+03	0.00E+00	7.27E+04
TE-131	2.16E+01	8.90E+00	6.75E+00	1.66E+01	9.44E+01	0.00E+00	1.77E+00
TE-132	2.70E+03	1.71E+03	1.61E+03	1.80E+03	1.64E+04	0.00E+00	5.42E+04
I-130	5.06E+01	1.46E+02	5.84E+01	1.19E+04	2.25E+02	0.00E+00	1.12E+02
I-131	2.87E+02	4.02E+02	2.16E+02	1.17E+05	6.92E+02	0.00E+00	7.95E+01
I-132	1.37E+01	3.58E+01	1.29E+01	1.21E+03	5.64E+01	0.00E+00	1.56E+01
I-133	9.87E+01	1.67E+02	5.11E+01	2.34E+04	2.94E+02	0.00E+00	1.27E+02
I-134	7.17E+00	1.90E+01	6.82E+00	3.17E+02	2.99E+01	0.00E+00	2.50E-01
I-135	2.99E+01	7.71E+01	2.86E+01	4.96E+03	1.22E+02	0.00E+00	8.54E+01
CS-134	4.24E+04	9.97E+04	4.63E+04	0.00E+00	3.17E+04	1.21E+04	1.24E+03
CS-136	4.35E+03	1.71E+04	1.15E+04	0.00E+00	9.32E+03	1.47E+03	1.38E+03
CS-137	5.67E+04	7.54E+04	2.63E+04	0.00E+00	2.57E+04	9.97E+03	1.07E+03
CS-138	3.93E+01	7.54E+01	3.77E+01	0.00E+00	5.57E+01	6.48E+00	3.42E-02
BA-139	7.05E+00	4.96E-03	2.05E-01	0.00E+00	4.67E-03	3.42E-03	6.28E+01
BA-140	1.44E+03	1.76E+00	9.28E+01	0.00E+00	5.98E-01	1.19E+00	2.22E+03
BA-141	3.40E+00	2.54E-03	1.14E-01	0.00E+00	2.36E-03	1.74E-03	7.25E-06
BA-142	1.52E+00	1.52E-03	9.33E-02	0.00E+00	1.28E-03	1.01E-03	4.65E-12
LA-140	1.67E+00	8.20E-01	2.18E-01	0.00E+00	0.00E+00	0.00E+00	4.71E+04
LA-142	8.58E-02	3.81E-02	9.49E-03	0.00E+00	0.00E+00	0.00E+00	1.16E+03
CE-141	3.49E+00	2.33E+00	2.67E-01	0.00E+00	1.10E+00	0.00E+00	6.66E+03
CE-143	6.16E-01	4.48E+02	5.01E-02	0.00E+00	2.01E-01	0.00E+00	1.35E+04
CE-144	1.82E+02	7.55E+01	9.80E+00	0.00E+00	4.51E+01	0.00E+00	4.59E+04
PR-143	6.28E+00	2.51E+00	3.13E-01	0.00E+00	1.46E+00	0.00E+00	2.07E+04
PR-144	2.06E-02	8.44E-03	1.05E-03	0.00E+00	4.84E-03	0.00E+00	2.27E-05
ND-147	4.50E+00	4.89E+00	2.93E-01	0.00E+00	2.87E+00	0.00E+00	1.76E+04
W-187	3.22E+02	2.62E+02	9.19E+01	0.00E+00	0.00E+00	0.00E+00	7.10E+04
NP-239	3.98E-02	3.75E-03	2.08E-03	0.00E+00	1.18E-02	0.00E+00	6.03E+02
K-40	0.00E+00	0.00E+00	0.00E+00	0.00E+00	0.00E+00	0.00E+00	0.00E+00
CO-57	0.00E+00	1.25E+02	2.10E+02	0.00E+00	0.00E+00	0.00E+00	2.33E+03
SR-85	0.00E+00	0.00E+00	0.00E+00	0.00E+00	0.00E+00	0.00E+00	0.00E+00
Y-88	0.00E+00	0.00E+00	0.00E+00	0.00E+00	0.00E+00	0.00E+00	0.00E+00
NB-94	0.00E+00	0.00E+00	0.00E+00	0.00E+00	0.00E+00	0.00E+00	0.00E+00
NB-97	4.36E-02	1.08E-02	3.95E-03	0.00E+00	1.27E-02	0.00E+00	2.58E+02
CD-109	0.00E+00	0.00E+00	0.00E+00	0.00E+00	0.00E+00	0.00E+00	0.00E+00
SN-113	0.00E+00	0.00E+00	0.00E+00	0.00E+00	0.00E+00	0.00E+00	0.00E+00
BA-133	0.00E+00	0.00E+00	0.00E+00	0.00E+00	0.00E+00	0.00E+00	0.00E+00
TE-134	3.46E+01	2.22E+01	2.32E+01	2.84E+01	2.12E+02	0.00E+00	1.28E+00
CE-139	0.00E+00	0.00E+00	0.00E+00	0.00E+00	0.00E+00	0.00E+00	0.00E+00
HG-203	0.00E+00	0.00E+00	0.00E+00	0.00E+00	0.00E+00	0.00E+00	0.00E+00

Table 2 - 3

Site Related Child Ingestion Dose Commitment Factors
(Freshwater Fish and Saltwater Invertebrate Consumption)

(AiT)
mR/hr per uCi/ml

ISOTOPE	BONE	LIVER	TOT BODY	THYROID	KIDNEY	LUNG	GI-LLI
H-3	0.00E+00	1.81E-01	1.81E-01	1.81E-01	1.81E-01	1.81E-01	1.81E-01
BE-7	4.77E-01	8.08E-01	5.33E-01	0.00E+00	7.96E-01	0.00E+00	4.52E+01
NA-24	4.57E+02	4.57E+02	4.57E+02	4.57E+02	4.57E+02	4.57E+02	4.57E+02
P-32	6.98E+07	3.27E+06	2.69E+06	0.00E+00	0.00E+00	0.00E+00	1.93E+06
CR-51	0.00E+00	0.00E+00	4.86E+00	2.70E+00	7.37E-01	4.92E+00	2.58E+02
MN-54	0.00E+00	4.20E+03	1.12E+03	0.00E+00	1.18E+03	0.00E+00	3.53E+03
MN-56	0.00E+00	1.31E+02	2.96E+01	0.00E+00	1.59E+02	0.00E+00	1.90E+04
FE-55	4.55E+04	2.42E+04	7.48E+03	0.00E+00	0.00E+00	1.37E+04	4.47E+03
FE-59	6.53E+04	1.06E+05	5.27E+04	0.00E+00	0.00E+00	3.07E+04	1.10E+05
CO-58	0.00E+00	4.20E+02	1.29E+03	0.00E+00	0.00E+00	0.00E+00	2.45E+03
CO-60	0.00E+00	1.23E+03	3.64E+03	0.00E+00	0.00E+00	0.00E+00	6.84E+03
NI-63	6.85E+04	3.67E+03	2.33E+03	0.00E+00	0.00E+00	0.00E+00	2.47E+02
NI-65	2.83E+02	2.66E+01	1.55E+01	0.00E+00	0.00E+00	0.00E+00	3.26E+03
CU-64	0.00E+00	9.05E+01	5.47E+01	0.00E+00	2.19E+02	0.00E+00	4.25E+03
ZN-65	1.55E+05	4.12E+05	2.56E+05	0.00E+00	2.59E+05	0.00E+00	7.23E+04
ZN-69	4.94E+02	7.14E+02	6.60E+01	0.00E+00	4.33E+02	0.00E+00	4.50E+04
BR-83	0.00E+00	0.00E+00	5.67E+01	0.00E+00	0.00E+00	0.00E+00	0.00E+00
BR-84	0.00E+00	0.00E+00	6.56E+01	0.00E+00	0.00E+00	0.00E+00	0.00E+00
BR-85	0.00E+00	0.00E+00	3.02E+00	0.00E+00	0.00E+00	0.00E+00	0.00E+00
RB-86	0.00E+00	1.06E+05	6.50E+04	0.00E+00	0.00E+00	0.00E+00	6.80E+03
RB-88	0.00E+00	3.00E+02	2.08E+02	0.00E+00	0.00E+00	0.00E+00	1.47E+01
RB-89	0.00E+00	1.85E+02	1.64E+02	0.00E+00	0.00E+00	0.00E+00	1.61E+00
SR-89	3.63E+04	0.00E+00	1.04E+03	0.00E+00	0.00E+00	0.00E+00	1.41E+03
SR-90	4.68E+05	0.00E+00	1.19E+05	0.00E+00	0.00E+00	0.00E+00	6.30E+03
SR-91	6.60E+02	0.00E+00	2.49E+01	0.00E+00	0.00E+00	0.00E+00	1.46E+03
SR-92	2.48E+02	0.00E+00	9.96E+00	0.00E+00	0.00E+00	0.00E+00	4.70E+03
Y-90	8.79E+00	0.00E+00	2.35E-01	0.00E+00	0.00E+00	0.00E+00	2.50E+04
Y-91M	8.17E-02	0.00E+00	2.97E-03	0.00E+00	0.00E+00	0.00E+00	1.60E+02
Y-91	1.29E+02	0.00E+00	3.44E+00	0.00E+00	0.00E+00	0.00E+00	1.71E+04
Y-92	7.70E-01	0.00E+00	2.20E-02	0.00E+00	0.00E+00	0.00E+00	2.22E+04
Y-93	2.44E+00	0.00E+00	6.69E-02	0.00E+00	0.00E+00	0.00E+00	3.63E+04
ZR-95	2.10E+00	4.62E-01	4.11E-01	0.00E+00	6.62E-01	0.00E+00	4.82E+02
ZR-97	1.27E-01	1.83E-02	1.08E-02	0.00E+00	2.63E-02	0.00E+00	2.77E+03
NB-95	5.75E+00	2.24E+00	1.60E+00	0.00E+00	2.10E+00	0.00E+00	4.14E+03
MO-99	0.00E+00	1.31E+02	3.23E+01	0.00E+00	2.79E+02	0.00E+00	1.08E+02
TC-99M	1.99E-02	3.89E-02	6.46E-01	0.00E+00	5.66E-01	1.98E-02	2.22E+01
TC-101	2.30E-02	2.41E-02	3.06E-01	0.00E+00	4.11E-01	1.27E-02	7.66E-02
RU-103	1.48E+02	0.00E+00	5.67E+01	0.00E+00	3.72E+02	0.00E+00	3.82E+03
RU-105	1.30E+01	0.00E+00	4.73E+00	0.00E+00	1.15E+02	0.00E+00	8.50E+03
RU-106	2.36E+03	0.00E+00	2.95E+02	0.00E+00	3.19E+03	0.00E+00	3.68E+04
AG-110M	5.24E+02	3.54E+02	2.83E+02	0.00E+00	6.59E+02	0.00E+00	4.21E+04
SB-122	5.80E+01	8.56E-01	1.70E+01	7.43E-01	0.00E+00	2.36E+01	4.46E+03
SB-124	6.55E+02	8.50E+00	2.29E+02	1.44E+00	0.00E+00	3.63E+02	4.09E+03
SB-125	4.22E+02	3.25E+00	8.85E+01	3.91E-01	0.00E+00	2.35E+02	1.01E+03

Table 2 - 3

Site Related Child Ingestion Dose Commitment Factors
(Freshwater Fish and Saltwater Invertebrate Consumption)

(AiT)
mR/hr per uCi/ml

ISOTOPE	BONE	LIVER	TOT BODY	THYROID	KIDNEY	LUNG	GI-LLI
TE-125M	3.81E+03	1.03E+03	5.08E+02	1.07E+03	0.00E+00	0.00E+00	3.68E+03
TE-127M	9.67E+03	2.60E+03	1.15E+03	2.31E+03	2.76E+04	0.00E+00	7.83E+03
TE-127	1.58E+02	4.25E+01	3.38E+01	1.09E+02	4.48E+02	0.00E+00	6.15E+03
TE-129M	1.63E+04	4.55E+03	2.53E+03	5.25E+03	4.78E+04	0.00E+00	1.99E+04
TE-129	4.48E+01	1.25E+01	1.06E+01	3.20E+01	1.31E+02	0.00E+00	2.79E+03
TE-131M	2.41E+03	8.33E+02	8.86E+02	1.71E+03	8.06E+03	0.00E+00	3.38E+04
TE-131	2.78E+01	8.46E+00	8.26E+00	2.12E+01	8.40E+01	0.00E+00	1.46E+02
TE-132	3.38E+03	1.50E+03	1.81E+03	2.18E+03	1.39E+04	0.00E+00	1.51E+04
I-130	6.28E+01	1.27E+02	6.54E+01	1.40E+04	1.90E+02	0.00E+00	5.94E+01
I-131	3.70E+02	3.72E+02	2.12E+02	1.23E+05	6.11E+02	0.00E+00	3.31E+01
I-132	1.72E+01	3.16E+01	1.45E+01	1.47E+03	4.84E+01	0.00E+00	3.72E+01
I-133	1.27E+02	1.58E+02	5.96E+01	2.93E+04	2.63E+02	0.00E+00	6.35E+01
I-134	9.02E+00	1.67E+01	7.70E+00	3.85E+02	2.56E+01	0.00E+00	1.11E+01
I-135	3.77E+01	6.78E+01	3.21E+01	6.00E+03	1.04E+02	0.00E+00	5.16E+01
CS-134	5.15E+04	8.44E+04	1.78E+04	0.00E+00	2.62E+04	9.39E+03	4.55E+02
CS-136	5.17E+03	1.42E+04	9.19E+03	0.00E+00	7.56E+03	1.13E+03	4.99E+02
CS-137	7.19E+04	6.88E+04	1.02E+04	0.00E+00	2.24E+04	8.07E+03	4.31E+02
CS-138	5.01E+01	6.97E+01	4.42E+01	0.00E+00	4.90E+01	5.28E+00	3.21E+01
BA-139	9.34E+00	4.99E-03	2.71E-01	0.00E+00	4.35E-03	2.93E-03	5.39E+02
BA-140	1.87E+03	1.64E+00	1.09E+02	0.00E+00	5.35E-01	9.79E-01	9.50E+02
BA-141	4.51E+00	2.53E-03	1.47E-01	0.00E+00	2.19E-03	1.48E-02	2.57E+00
BA-142	1.97E+00	1.42E-03	1.10E-01	0.00E+00	1.15E-03	8.35E-04	2.57E-02
LA-140	2.16E+00	7.55E-01	2.54E-01	0.00E+00	0.00E+00	0.00E+00	2.10E+04
LA-142	1.12E-01	3.57E-02	1.12E-02	0.00E+00	0.00E+00	0.00E+00	7.08E+03
CE-141	4.65E+00	2.32E+00	3.45E-01	0.00E+00	1.02E+00	0.00E+00	2.90E+03
CE-143	8.19E-01	4.44E+02	6.44E-02	0.00E+00	1.86E-01	0.00E+00	6.51E+03
CE-144	2.44E+02	7.64E+01	1.30E+01	0.00E+00	4.23E+01	0.00E+00	1.99E+04
PR-143	8.40E+00	2.52E+00	4.17E-01	0.00E+00	1.37E+00	0.00E+00	9.06E+03
PR-144	2.76E-02	8.53E-03	1.39E-03	0.00E+00	4.51E-03	0.00E+00	1.84E+01
ND-147	5.96E+00	4.83E+00	3.74E-01	0.00E+00	2.65E+00	0.00E+00	7.65E+03
W-187	4.08E+02	2.42E+02	1.08E+02	0.00E+00	0.00E+00	0.00E+00	3.40E+04
NP-239	5.15E-02	3.70E-03	2.60E-03	0.00E+00	1.07E-02	0.00E+00	2.74E+02
K-40	0.00E+00	0.00E+00	0.00E+00	0.00E+00	0.00E+00	0.00E+00	0.00E+00
CO-57	0.00E+00	1.15E+02	2.33E+02	0.00E+00	0.00E+00	0.00E+00	9.43E+02
SR-85	0.00E+00	0.00E+00	0.00E+00	0.00E+00	0.00E+00	0.00E+00	0.00E+00
Y-88	0.00E+00	0.00E+00	0.00E+00	0.00E+00	0.00E+00	0.00E+00	0.00E+00
NB-94	0.00E+00	0.00E+00	0.00E+00	0.00E+00	0.00E+00	0.00E+00	0.00E+00
NB-97	5.55E-02	1.00E-02	4.68E-03	0.00E+00	1.11E-02	0.00E+00	3.09E+03
CD-109	0.00E+00	0.00E+00	0.00E+00	0.00E+00	0.00E+00	0.00E+00	0.00E+00
SN-113	0.00E+00	0.00E+00	0.00E+00	0.00E+00	0.00E+00	0.00E+00	0.00E+00
BA-133	0.00E+00	0.00E+00	0.00E+00	0.00E+00	0.00E+00	0.00E+00	0.00E+00
TE-134	4.31E+01	1.94E+01	2.59E+01	3.41E+01	1.80E+02	0.00E+00	1.97E+02
CE-139	0.00E+00	0.00E+00	0.00E+00	0.00E+00	0.00E+00	0.00E+00	0.00E+00
HG-203	0.00E+00	0.00E+00	0.00E+00	0.00E+00	0.00E+00	0.00E+00	0.00E+00

Table 2-4

Bio-Accumulation Factors for Liquid Effluent Isotopes
(pCi/kg per pCi/liter)

ISOTOPE	Freshwater Fish BFi	Saltwater Invertebrates BIi	ISOTOPE	Freshwater Fish BFi	Saltwater Invertebrates BIi
H-3	9.000E-01	9.300E-01	TE-125M	4.000E+02	1.000E+02
BE-7	2.000E+00	2.000E+02	TE-127M	4.000E+02	1.000E+02
NA-24	1.000E+02	1.900E-01	TE-127	4.000E+02	1.000E+02
P-32	1.000E+05	3.000E+04	TE-129M	4.000E+02	1.000E+02
CR-51	2.000E+02	2.000E+03	TE-129	4.000E+02	1.000E+02
MN-54	4.000E+02	4.000E+02	TE-131M	4.000E+02	1.000E+02
MN-56	4.000E+02	4.000E+02	TE-131	4.000E+02	1.000E+02
FE-55	1.000E+02	2.000E+04	TE-132	4.000E+02	1.000E+02
FE-59	1.000E+02	2.000E+04	I-130	1.500E+01	5.000E+01
CO-58	5.000E+01	1.000E+03	I-131	1.500E+01	5.000E+01
CO-60	5.000E+01	1.000E+03	I-132	1.500E+01	5.000E+01
NI-63	1.000E+02	2.500E+02	I-133	1.500E+01	5.000E+01
NI-65	1.000E+02	2.500E+02	I-134	1.500E+01	5.000E+01
CU-64	5.000E+01	1.700E+03	I-135	1.500E+01	5.000E+01
ZN-65	2.000E+03	5.000E+04	CS-134	2.240E+02	2.240E+02
ZN-69	2.000E+03	5.000E+04	CS-136	2.240E+02	2.240E+02
BR-83	4.200E+02	3.100E+00	CS-137	2.240E+02	2.240E+02
BR-84	4.200E+02	3.100E+00	CS-138	2.240E+02	2.240E+02
BR-85	4.200E+02	3.100E+00	BA-139	4.000E+00	1.000E+02
RB-86	2.000E+03	1.700E+01	BA-140	4.000E+00	1.000E+02
RB-88	2.000E+03	1.700E+01	BA-141	4.000E+00	1.000E+02
RB-89	2.000E+03	1.700E+01	BA-142	4.000E+00	1.000E+02
SR-89	3.000E+01	2.000E+01	LA-140	2.500E+01	1.000E+03
SR-90	3.000E+01	2.000E+01	LA-142	2.500E+01	1.000E+03
SR-91	3.000E+01	2.000E+01	CE-141	1.000E+00	6.000E+02
SR-92	3.000E+01	2.000E+01	CE-143	1.000E+00	6.000E+02
Y-90	2.500E+01	1.000E+03	CE-144	1.000E+00	6.000E+02
Y-91M	2.500E+01	1.000E+03	PR-143	2.500E+01	1.000E+03
Y-91	2.500E+01	1.000E+03	PR-144	2.500E+01	1.000E+03
Y-92	2.500E+01	1.000E+03	ND-147	2.500E+01	1.000E+03
Y-93	2.500E+01	1.000E+03	W-187	1.200E+03	3.000E+01
ZR-95	3.300E+00	8.000E+01	NP-239	1.000E+01	1.000E+01
ZR-97	3.300E+00	8.000E+01	K-40	0.000E+00	0.000E+00
NB-95	3.000E+02	1.000E+02	CO-57	5.000E+01	1.000E+03
MO-99	1.000E+01	1.000E+01	SR-85	0.000E+00	0.000E+00
TC-99M	1.500E+01	5.000E+01	Y-88	0.000E+00	0.000E+00
TC-101	1.500E+01	5.000E+01	NB-94	3.000E+02	1.000E+02
RU-103	1.000E+01	1.000E+03	NB-97	3.000E+02	1.000E+02
RU-105	1.000E+01	1.000E+03	CD-109	0.000E+00	0.000E+00
RU-106	1.000E+01	1.000E+03	SN-113	0.000E+00	0.000E+00
AG-110M	2.300E+00	5.000E+03	BA-133	0.000E+00	0.000E+00
SB-122	1.000E+00	3.000E+02	TE-134	4.000E+02	1.000E+02
SB-124	1.000E+00	3.000E+02	CE-139	0.000E+00	0.000E+00
SB-125	1.000E+00	3.000E+02	HG-203	0.000E+00	0.000E+00

Bio-Accumulation Factors and DFi's for Noble Gases = 0

3.0 GASEOUS EFFLUENTS

3.1 Gaseous Effluent Releases - General Information

3.1.1 A completed and properly authorized Airborne Radioactive Waste Release Permit shall be issued prior to the release of airborne activity from the waste gas holding system, containment purge, or any other batch release.

3.1.2 Since Indian Point is a two unit site, the derived instantaneous μCi/sec limits for each unit, (Section 3.2) were derived from an actual site limit (Appendix I). The time-average limits are "per reactor", and applicable to each unit.

3.1.3 During Modes 4 through 6, there is no flowpath for a release from the Condenser Air Ejector. During these intervals, when there is no actual release pathway, the monthly grab sample described in RECS D3.2.1 is not required.

3.1.4 During normal plant operation (without a primary to secondary leak), almost all gaseous releases are through the main Plant Vent. A negligible amount may be identified in other pathways (see Appendix C).

In the event of extended operation with a primary to secondary leak, low level releases are expected from both the blowdown flash tank vent and condenser air ejector. However, the limits on steam generator leakage are much more restrictive than those for effluent releases. Therefore, allocation of portions of the allowable release rate to these various release points during routine operation is not warranted.

If, on the other hand, the instantaneous release rate is being considered for the Plant Vent, then ALL release points should be considered when establishing alarm setpoints, per ODCM Part II, Section 1.

3.1.5 For releases that are expected to continue for periods over two days, a new release permit will normally be issued each day.

A containment purge permit may be closed, with the release reclassified as continuous building ventilation, when activity in containment is sufficiently reduced to that level which, if released for 31-days, would remain BELOW the dose projection limits.

However, when plant conditions change, such that releases to containment are likely, a new permit should be evaluated.

3.1.6 Assurance that the combined gaseous releases from Units 2 and 3 do not exceed limits of Section 3.2.1 is provided by administrative controls for both units. These controls include apportionment of the 10CFR20 limitations and back-calculating radiation monitor setpoints accordingly. These calculations are discussed in Appendix I.

3.1.7 By mutual agreement with units 2 and 3 Shift Supervisors, one unit can reduce or eliminate discharges for a period of time to allow the other unit to use the full site permissible discharge rate, or a specific portion thereof, for unique releases that may require the site limit for release rate. To better control these evolutions, written agreement to the apportionment is generally kept with each unit's CRS and included on applicable permits for the duration.

3.1.8 Conservative release rate limitations have been established to ensure compliance with 10CFR20, and to aid in controlling time average dose limits. The annual average release rate limit (Appendix I) shall normally be used for calculating limitations on discharge. If this limitation is unduly restrictive, other release rates may be allowed, per Appendix I, and summarized below:

Release Rate (µCi/sec)	Permission Required
Quarterly Average	Site Operations Manager / designee
Default Instantaneous	General Manager, Plant Operations / designee
ODCM Instantaneous	GMPO and Chemistry Superintendent / designee

As described in Appendix I, the ODCM instantaneous limit provides a maximum release rate with an actual or suspected isotopic mixture, back-calculated from the actual 10CFR20 limit (500 mrem/yr for the site). The calculations for the use of this limit should be verified within the Chemistry department. The default interval in which to determine the proximity to this limit (uCi/sec or mrem/yr) is one hour or less.

3.1.9 Containment Pressure Reliefs

Containment pressure reliefs occur frequently enough to be considered continuous releases. Grab samples of containment atmosphere are obtained periodically to ensure the use of accurate mixtures in effluent calculations. The containment noble gas monitors (R-42 for Unit 2 and R-12 for Unit 3) are used in conjuction with expected flow rates to determine a release rate. The effluent noble gas monitor in the plant vent is also used to verify total unit release rate remains below the current authorized limit.

3.1.10 Composite Particulate Samples

Continuous building ventilation exhaust points are sampled continuously for Iodine and Particulate. Media is replaced weekly, with composite filters prepared for vendor lab analyses monthly.

3.1.11 Flow rate measurement for the Continuous Building Ventilation systems is typically obtained from the installed process monitor or nearby instrument. When the process flow rate instrument is OOS, estimates are performed every 4 hours per the RECS, to allow appropriate quantification of continuous airborne effluent. The estimates are typically performed by summing the exhaust flow rates (or design flow rate) from any operable fans. Unit 3's PV flow may be estimated from a backup instrument.

Unit 3's Admin Bldg does NOT have a flow rate instrument (design flow of 12500 cfm is used). The process flow rate monitor surveillance requirements specified in the RECS are not applicable for the Unit 3 Admin Building.

3.1.12 Gas Storage Tank Activity Limits

The quantity of radioactivity in each gas storage tank is limited to 50,000 Ci of noble gas, Xenon-133 equivalent, per RECS D3.2.6. The source of this requirement is NUREG 0133 (Section 5.6.1) for both units. However, the parameters used in the given equation are applied differently at each unit, as defined in the FSARs and summarized in the following discussion:

Unit 2:

$$Q_{133} = \frac{(500mrem) * \ 3.15E+7 \ \ \text{sec}/yr}{(1E6\mu Ci/Ci)(294mrem - m^3/\mu Ci - yr)(1.81E-3 \ \ \text{sec}/m^3)} = \underline{\mathbf{29{,}761\ Ci}}$$

Where;

294 mrem-m^3/μCi-yr = the Xe-133 WB dose factor, RG 1.109, table B-1 (K).
1.81E-3 sec/m^3 = Design Basis Accident X/Q from Indian Point 2 FSAR

An actual curie limit is calculated by substituting the actual mixture K_{eff} into the equation above. For example, the K_{eff} for the accident mix computed using Table 14.2-5 of the FSAR is 476 mrem-m^3/μCi-yr. Thus, the actual activity limit (for an expected mixture of radionuclides, not just Xe-133) is:

$$Q_{133} = \frac{(500mrem) * \ 3.15E+7 \ \ \text{sec}/yr}{(1E6\mu Ci/Ci)(476mrem - m^3/\mu Ci - yr)(1.81E-3 \ \ \text{sec}/m^3)} = \underline{\mathbf{18{,}300\ Ci}}$$

Similar calculations could be performed with actual K_{eff} and X/Q data.

As demonstrated above, the setpoints calculated from NUREG 0133 modeling assume Xe-133 equivalent and no tank interconnections (29,761 Ci of Xe-133 equivalent or 18,300 Ci for an expected accident mixture).

However, the tanks are, in fact, generally interconnected, requiring a more conservative approach. The unit 2 FSAR (14.2.3) has established a specific gas decay tank limit of **6,000 Ci** each. This value is based on the original RECS required 29,761 curies of Xe-133 equivalent, divided into 4 large and all 6 small gas decay tanks. Given the actual atmospheric volume of the tanks (525 ft^3 for each large and 40 ft^3 for each small), the total volume is approximately 4.5 tanks:

$$\frac{29{,}761}{4.5} = \underline{\mathbf{6{,}000\ Ci}} \ \ \text{Xe-133 Equivalent}$$

The RECS required gas storage tank radiation monitor (R-50), is therefore set to alarm at 6,000 curies. Warn setpoints are established by procedure, usually with consideration for measured tank contents and anticipated release rate.

In the event R-50 becomes inoperable, but a depressurized sample can be taken, the quantity limits can still be verified. Compliance with the appropriate curie limit in a tank is assured if the following inequality holds:

$$[A]_m < \frac{14.7\,(Q)}{(14.7 + P)V} \quad \text{or} \quad [A]_{eq} < \frac{14.7\,(Q133)}{(14.7 + P)V}$$

Where:

$[A]_m \equiv$ total measured depressurized sample concentration (μCi/cc)

$[A]_{eq} \equiv$ Xe-133 equivalent measured depressurized sample concentration (μCi/cc)

$V \equiv$ tank volume (cc) $\quad P \equiv$ tank pressure (psig)

$Q \equiv$ activity limit for selected mix (μCi) $\quad Q133 \equiv$ dose equivalent Xe133 limit(μCi)

Unit 3:

$$Qit = \frac{(500mrem) * \ 3.15E+7 \ \text{sec}/yr}{(1E6\mu Ci/Ci)(294mrem - m^3/\mu Ci - yr)(1.03E-3 \ \text{sec}/m^3)} = \underline{\mathbf{50{,}000\ Ci}}$$

Where;

Ki = 294 mrem-m^3/μCi-yr, Xe-133 equivalent Table B-1 (RG 1.109)
X/Q = 1.03 x 10^{-3} sec/m^3, Indian Point 3 FSAR

This limit assumes 100% Xe-133 as per NUREG 0133. Utilizing the Ki from an expected mixture during RCS degasification (787 mrem-m^3 per uCi-yr), the gas tank conservative administrative limit should becomes:

$$Qit = \frac{(500\text{mrem}) * \ 3.15\text{E}+7 \ \text{sec}/\text{yr}}{(1\text{E}6\mu\text{Ci}/\text{Ci})(787\text{mrem} - \text{m}^3/\mu\text{Ci} - \text{yr})(1.03\text{E}-3 \ \text{sec}/\text{m}^3)} = \underline{\mathbf{19{,}400\ Ci}}$$

There are two methods available to ensure that the activity in the gas storage tank is within the conservative administrative limit:

$$\frac{1.94\text{E}+4 * 1\text{E}6\mu\text{Ci}/\text{Ci}}{525\text{ft}^3 * \left(\frac{164.7\text{psia}}{14.7\text{psia}}\right) * 2.83\text{E}4\text{cc}/\text{ft}^3} = 1.17\text{E}+2\ \mu\text{Ci}/\text{cc}$$

1. The total gaseous activity will normally be limited to less than 117 μCi/cc. If this concentration limit is exceeded, then the contents of the tank will be monitored and actions taken to ensure the 19,400 curie per tank limit is not exceeded.

2. The waste gas line monitor (R-20) reads in μCi/cc. It allows for control of waste gas tank curie content by limiting the input concentration to 117 μCi/cc, thereby limiting the curies to 19,400.

Large gas decay tanks on fill and CVCS tanks (which are indicative of the gas mixture in or from the reuse system) are continuously monitored for H_2 and O_2 through in-line instrumentation. With either in-line instrument out of service, a grab sample of the tank on receipt shall be taken daily, unless in degassing operation, when the periodicity is every four hours.Other primary system tank cover gases can be manually directed through these instruments for individual samples.

Gas releases may also occur from the gas space atop liquid holdup tanks. The basis for assuring these tanks comply with the curie limits for noble gas is Technical Specification 3.4.16, which limits Reactor Coolant to ≤ 1 μCi/gm Dose Equivalent Iodine-131. Using the assumptions discussed in each unit's FSAR, the potential total curies of noble gas in the liquid holdup tanks is limited to less than the conservative limit for the Gas Storage Tanks.

3.1.13 The activity released via the blowdown flash tank vent is determined by obtaining the steam generator blowdown activity (tritium, noble gas, and iodine), partitioned per Regulatory Guide 1.42 "Interim Licensing Policy On As Low As Practicable for Gaseous Radioiodine Releases from Light Water Cooled Nuclear Power Reactors" (from NUREG 0472, Rev3, DRAFT 6, TABLE 3.3-13), or Reference 4, "An Evaluation to Demonstrate the Compliance of the Indian Point Reactors with the Design Objectives of 10CFR50, Appendix I".

3.1.14 Carbon 14 is released at a rate of 9.6 curies per GW(e)/yr based upon studies performed by the New York State Department of Health at Indian Point 3. This is released in a gaseous form, the primary dose from which is in the CO_2 form. While quantifiable based on the GW(e) per year, C-14 is exempt from the dose limits specified in the RECS. Nonetheless, doses resulting from these releases are calculated in accordance with the methodology in Reg. Guide 1.109 and listed in the Radiological Impact on Man section of the Annual Radioactive Effluent Release Report. The airborne effluent dose calculation from C-14 emissions is performed using the fraction of carbon 14 released in the CO_2 form (26%).

3.1.15 The Unit 3 Liquid Waste Monitor Tanks have an airborne release pathway. The original plant design limited the gases through this pathway by reducing the entrained gases to less than 2E-3 μCi/ml. The removal of the CVCS gas stripper under modification 86-3-122 CVCS requires the quantification of these gases when the entrained gaseous activity in the Monitor Tank inlet exceeds 2E-3 μCi/ml. No action is required if the inlet noble gas concentration is less than 2E-3 μCi/ml. This gas release will be quantified by calculating the difference (in μCi's) between the gaseous activity added to the tank and the gaseous activity present in the effluent release sample. This difference will be quantified as an airborne ground level batch release, using a specifically determined ground level dispersion constant (Section 3.5.3).

A separate release permit evaluating this release is not required prior to release. Calculation of this rate of release is not required, however the time average dose contribution shall be calculated and controlled per Sections 3.3 and 3.4 of the ODCM. Section 3.6 provides additional detail relative to the finite cloud correction assumptions for this pathway.

Unit 2's Waste Distillate Storage Tanks are vented inside the Unit 1 facility, so there is no similar airborne release pathway from these tanks.

3.1.16 Evaluations of previous gas decay tank and containment purge releases have been performed. These evaluations indicate that these "Short Term Releases" (less than 500 hours per year and less than 150 hours per quarter) are sufficiently random to utilize the long term meteorological dispersion factor (NUREG 0133, Section 3.3, Page 8). The short-term correction factor, will only be used when non-random releases are to be made an a routine basis.

3.1.17 Airborne releases from the Steam Generator Safety or Atmospheric Dump Valves can occur during a Primary to Secondary leak. Tritium, Noble Gas, and Iodine effluent doses are determined using a source term activity (Main Steam or Steam Generator Blowdown), an Iodine partition factor (per Section 3.1.13), and a release rate, determined from Engineering Design Calculation 187 (Steam Generator Atmospherics), or design flowrate (from Steam Generator Safeties) at specific pressures in the Steam Generator.

3.1.18 Other release pathways resulting from Primary to Secondary leakage include the steam driven auxiliary feed pump vent, the gland seal exhaust vent, the air ejector vent, and the Feed Water heater flash tank vent. Offsite doses from these or other abnormal airborne release points are calculated by obtaining the release rate (from system descriptions and/or steam tables corrected for system pressure, as applicable) and source term activity (eg. Main Steam , Reactor Coolant, or best estimate) for Tritium, Noble Gas, and Iodine, partitioned as per Section 3.1.13.

3.1.19 The Unit 3 Monitor Tank vents, both unit Condenser Air Ejector, and the Gland Seal Exhaust points are ground level releases. Unless otherwise designated, other release points are considered mixed mode, per Section 3.6.

3.2 Gaseous Effluent Dose Calculation Requirements

3.2.1 RECS D3.2.1 requires that the dose rate due to radioactive materials released in gaseous effluents from the site at or beyond the site boundary shall be limited to:

a) For noble gases: Less than or equal to 500 mrem/yr to the total body and less than or equal to 3000 mrem/yr to the skin; and

b) For Iodine 131, H-3, and radioactive materials in particulate form with half lives greater than 8 days: Less than or equal to 1500 mrem/yr to any organ.

These are SITE limits and normally apportioned appropriately between the units to simplify assurance of compliance with the RECS. The methodologies for performing these calculations are discussed in Sections 3.3.1 and 3.3.2, respectively.

3.2.2 RECS Section D3.2.2 requires that the air dose due to noble gas released in gaseous effluents from each reactor unit at or beyond the site boundary shall be limited to:

a) During any calendar quarter: Less than or equal to 5 mrad for gamma radiation and less than or equal to 10 mrad for beta radiation.

b) During any calendar year: Less than or equal to 10 mrad for gamma radiation and less than or equal to 20 mrad for beta radiation.

The methodology for calculating these doses is discussed in Section 3.3.3.

3.2.3 RECS Section D3.2.3 requires that the dose to a member of the general public from Iodine 131, Tritium, and radionuclides in particulate form (half-lives > 8 days) in gaseous effluents released from each reactor unit shall be limited to:

a) Less than or equal to 7.5 mrem to any organ during a calendar quarter

b) Less than or equal to 15 mrem to any organ during a calendar year.

Cumulative dose contributions for the current calendar quarter and current calendar year shall be determined at least once every 31 days.

The methodology for calculating these doses is discussed in Section 3.3.4.

If either of the air dose or iodine/particulate dose cumulative limits is exceeded by a factor of two or more, then a cumulative dose evaluation is required from all contributions of direct radiation at the site boundary per RECS D3.4.1.

3.2.4 RECS D3.2.4 requires that for each reactor unit, the appropriate portions of the gaseous radwaste treatment system shall be used to reduce radioactive effluents in gaseous waste prior to their discharge when projected gaseous effluent air dose at the site boundary when averaged over 31 days, would exceed 0.2 mrad for gamma radiation or 0.4 mrad for beta radiation.

RECS D3.2.4 requires that for each reactor unit, the appropriate portions of the The appropriate portions of the ventilation exhaust treatment system shall be used to reduce radioactive materials in gaseous releases when the projected doses averaged over 31 days, would exceed 0.3 mrem to any organ (at nearest residence). Dose due to gaseous releases from the site shall be calculated at least once every 31 days.

These doses are projected based on the dose methodology discussed in Section 3.3.3 (noble gas) and 3.3.4 (iodine). The average of previous months' doses is used to project future dose as follows:

$$\begin{bmatrix} \text{Dose} \\ \text{Projection} \end{bmatrix} = \frac{\text{Current Month Dose} + \text{Previous months' Dose}}{\text{number of months used}} \pm \begin{bmatrix} \textit{major} \\ \textit{planned} \\ \textit{evolutions} \end{bmatrix}$$

The term for planned evolutions is routinely determined from previous similar evolutions, such as releases associated with plant shutdown.

3.3 Dose Methodology (Computer Calculation)

3.3.1 Instantaneous Dose Rates - Noble Gas Releases

When the instantaneous limit applies, the process radiation monitor response or release rate can be averaged over a one-hour time interval.

3.3.1.1 The equations developed in this section are used to meet the calculational requirements of paragraph 3.2.1. The magnitude of this pathway is the same for all age groups so there is no critical group. The site release rate is split to 50% per each unit, in terms of uCi/sec. Converted to actual mrem/yr dose rate, Unit 2's portion is 44.6%, with Unit 3 being allocated 55.4% (Unit 3 is slightly closer to the site boundary where dose rates are calculated).

Each unit has different dispersion factors due to their relative positions to the critical sector of the unrestricted area boundary. The conversion from dose rate to Ci/sec was determined with the use of a model which incorporates a finite cloud exposure correction. The methodology is discussed in Section 3.6.

A calculation showing the relationship between Ci/sec and dose rates from Units 2 and 3 is shown in Appendix I. The equations for calculating the dose rate limitations are obtained from NUREG 0133 (Ref. 1, Section 5.2.1). Utilizing the above assumptions, these equations reduce to the following which are to be summed for each nuclide, i. (Note that these are default unit portions of a site release rate limit. The entire site limit can be applied to any one site, when required, per Section 3.1 and Appendix I).

$$\sum_i \left[(Ki) * \left(\overline{X/Q} \right) * (\dot{Q}i) \right] \leq \text{unit specific mrem/yr whole body limit}$$

$$\sum_i \left[(Li + 1.1Mi) * \left(\overline{X/Q} \right) * (\dot{Q}i) \right] \leq \text{unit specific skin limit, mrem/yr}$$

Where:

Ki = The total body dose factor due to gamma emissions for each identified noble gas radionuclide, in mrem/yr per μCi/m^3 (unit-specific finite cloud correction included, per Table 3-4).

Li = The skin dose factor due to beta emissions for each identified noble gas radionuclide, in mrem/yr per μCi/m^3, per Table 3-5.

Mi = The air dose factor due to gamma emissions for each identified noble gas radionuclide, in mrad/yr per μCi/m^3 (unit-specific finite cloud correction included, per Table 3-6).

Ni = The air dose factor due to beta emissions for each identified noble gas radionuclide, in mrad/yr per μCi/m^3, per Table 3-7.

$\dot{Q}$i = The release rate of radionuclides, i, in gaseous effluent for all release points in μCi/sec.

(X/Q) = For all vent releases, the highest calculated annual averaged relative concentration at the critical receptor (at a unit-specific distance and direction, in sec/m^3, as shown on Page 1 of Appendix I).

The Ki, Li, Mi, and Ni factors were obtained from Table B-1 of Regulatory Guide 1.109 and are included in this document as Tables 3-4, 3-5, 3-6, and 3-7 respectively. The gamma dose factgors (Ki and Mi) have a unit-specific finite cloud correction factor included, as discussed in Sections 3.5 and 3.6.

Unit specific dose rate limits, as stated in Appendix I are as follows:

Unit 2: mrem/yr whole body = 234, skin limit = 1194 mrem/yr
Unit 3: mrem/yr whole body = 266, skin limit = 1806 mrem/yr

3.3.1.2 These equations can also be expressed in the following manner:

$(\overline{K})\,(\dot{Q}t)\,(\overline{X/Q})$ = mrem/yr dose to whole body

$(\overline{L}+1.1\overline{M})\,(\overline{X/Q})\,(\dot{Q}t)$ = mrem/yr dose to skin

Where:

$\dot{Q}$ t = The release rate of all noble gases summed together in μCi/sec, i.e., the sum of all $\dot{Q}$ i.

$$\overline{K} = (1/\dot{Q}t)\sum_{i=1}^{n} (\dot{Q}i)\,(Ki)$$

$$\overline{L} = (1/\dot{Q}t)\sum_{i=1}^{n} (\dot{Q}i)\,(Li)$$

$$\overline{M} = (1/\dot{Q}t)\sum_{i=1}^{n} (\dot{Q}i)\,(Mi)$$

$$\overline{N} = (1/\dot{Q}t)\sum_{i=1}^{n} (\dot{Q}i)\,Ni)$$

The values of $\overline{K}$, $\overline{L}$, $\overline{M}$, and $\overline{N}$ are listed in Table 3-8 for the unrestricted area boundary, for both units.

3.3.2 Instantaneous Dose Rates - I-131, Part w/>8 day t½ , and H-3

The equation developed in this section is used to meet the calculational requirements of RECS D3.2.1. The critical organ is considered to be the child thyroid as stated in the RECS bases (BD3.2.1). Different dispersion factors are applied to the critical sector of the unrestricted area boundary for units 2 and 3. Therefore, while 50% of the site release limit (in Ci/sec) is applied to each unit, 32.8% of the limit is applied to Unit 2 and 67.2% to Unit 3 (per Appendix I). The equation for calculating the dose rate limitation is abbreviated from that shown in NUREG 0133 (Ref. 1, Section 5.2.1, Pg. 25) in that ground plane and milk pathways are not considered for this dose rate determination, due to insignificant contribution compared to the inhalation pathway.

Utilizing the above assumptions, the dose rate equation reduces to the following:

$\sum_{i} (Pi * (X/Q) * \dot{Q}i)$ must be less than the unit-specific mrem/yr limit

Where:

Unit-specific limits are 497 mrem/yr for Unit 2 and 1003 mrem/yr for Unit 3.

Pi = The dose parameter for radionuclides other than noble gases for the inhalation pathway in mrem/yr per μCi/m^3. These parameters (per Section 3.3.2.1) are calculated separately for each isotope, age group, and organ.

$\dot{Q}$i = The release rate of radionuclide 131 and particulates, i, in gaseous effluents for all release points in μCi/sec.

X/Q = The unit-specific annual average dispersion parameter for the inhalation pathway at the controlling location due to all vent releases, per Section 3.5 and Appendix I.

3.3.2.1 Calculation of Pi(in): Inhalation Dose Factor

Pi (inhalation) = K' (BR) DFAi (mrem/yr per μCi/m^3)

Where:

K' = A constant of conversion, 10^6 pCi/μCi

BR = The breathing rate of each age group as per 3.3.4.5.a (Table E-5 of Reg. Guide 1.109).

DFAi = The inhalation dose factor for each age group, organ, and nuclide, in mrem/pCi. These values are taken from Reg Guide 1.109, Table E-7 through E-9 and are reproduced in Tables 3-1a through 3-1d.

3.3.3 Time Average Dose - Noble Gas Release

3.3.3.1 The equations in this section are used to meet the calculational requirements of RECS D3.2.2. All noble gas releases at IPEC are assumed to be mixed mode unless indicated otherwise. Because the limits are in measured air dose (mrad), the magnitude of a measured effect is the same for all age groups. Dispersion parameters are discussed in Section 3.5.

3.3.3.2 Equations for calculating the air dose limitations are obtained from NUREG 0133 (Ref. 1, Section 5.3). The doses are evaluated at the unrestricted area boundary in the worst meteorological sector (a unit-specific location identified in Appendix I). These equations reduce to the following:

$$gamma\ air\ mrad = 3.17E-8 * \sum_i \mathrm{Mi}\,[(\mathrm{X/Q})\,(\tilde{\mathrm{Q}}\mathrm{i}) + (\mathrm{x/q})\,(\tilde{\mathrm{q}}\mathrm{i}) + (\mathrm{x/q_{mt}})\,(\tilde{\mathrm{q}}\mathrm{i_{mt}})]$$

$$beta\ air\ mrad = 3.17E-8 * \sum_i \mathrm{Ni}\,[(\mathrm{X/Q})\,(\tilde{\mathrm{Q}}\mathrm{i}) + (\mathrm{x/q})\,(\tilde{\mathrm{q}}\mathrm{i}) + (\mathrm{x/q_{mt}})\,(\tilde{\mathrm{q}}\mathrm{i_{mt}})]$$

Where:

Air dose limits are as follows:

	Any Calendar Quarter	Any Calendar Year
Gamma Air	*5 mrad*	*10 mrad*
Beta Air	*10 mrad*	*20 mrad*

(X/Q) =The highest calculated annual average relative concentration for the unrestricted area boundary at the controlling sector for long term releases (greater than 500 hrs/yr or 150 hrs/qtr or as noted in 3.1.16), per Appendix I.

(x/q) = The relative concentration for the unrestricted area boundary for short term releases (equal to or less than 500 hrs/yr or 150 hrs/qtr and not random as defined in NUREG 0133, Section 3.3). This value is calculated as per Section 3.5.

(x/q_{mt})=The relative concentration for the unrestricted area boundary for ground level releases from Unit 3 Monitor Tanks at the critical receptor, in sec/m^3, per Section 3.5.3.

Mi = The weighted air dose factor due to gamma emission for each identified noble gas radionuclide in mrad/yr per μCi/m^3. This factor is unit-specific, per Table 3-6.

Ni = The weighted air dose factor due to beta emissions for each identified noble gas radionuclide in mrad/yr per μCi/m^3.

$\tilde{q}i_{mt}$ = The total releases of noble gas radionuclides in Monitor Tank vents in μCi. Releases shall be cumulative over the calendar quarter or year, as appropriate.

$\tilde{q}i$ = The total release of noble gas radionuclides in gaseous effluents, i, for short term releases (equal to or less than 500 hrs/yr or 150 hrs/qtr and not random as defined in NUREG 0133, Section 3.3) from all vents, in μCi. Releases shall be cumulative over the calendar quarter or year as appropriate.

$\tilde{Q}i$ = The total release of noble gas radionuclides in gaseous effluents, i, for long term releases (greater than 500 hrs/yr or 150 hrs/qtr or as noted in 3.1.16) from all vents in μCi. Releases shall be cumulative over the calendar quarter or year as appropriate.

3.17 E-8 = The inverse of the number of seconds in a year.

The air dose factors Mi and Ni were obtained from Table B-1 of Regulatory Guide 1.109 and are listed in Table 3-6 and 3-7 respectively. The M air dose factors are finite cloud corrected and therefore unit-specific.

3.3.4 Time Averaged Dose - Radioiodine 131, Part w/t½ >8 days, and Tritium

3.3.4.1 The equations in this section are used to meet the calculational requirements of RECS D3.2.3.

3.3.4.2 The pathways considered in this analysis are as follows:

Pathway	*Receptor*
Inhalation, Ground Plane, Vegetative Ingestion	Primary, Nearest Resident, per App I
Inhalation, Ground Plane, Vegatative, Cow-Milk Ingestion	Secondary Receptor at 5 mile, applied per the annual Land Use Census

The land use census identifies a high degree of commercial, industrial, and residential land usage in the area, and as such, the meat ingestion pathway is not considered. Doses from the cow-milk pathway are included only if the applicable annual census has defined the pathway applicable. The methodology in nonetheless included here.

3.3.4.3 The equations for calculating the dose limitations are obtained from NUREG 0133 (Ref. 1, Section 5.3). These equations reduce to the following :

$$(3.17\,E\text{-}08)*\sum_i (Ri\,(W\,\tilde{Q}i + w\,\tilde{q}i) < 7.5 \text{ mrem} \quad \text{in a calendar quarter}$$

$$(3.17\,E\text{-}08)*\sum_i (Ri\,(W\,\tilde{Q}i + w\,\tilde{q}i) < 15 \text{ mrem} \quad \text{in a calendar year}$$

Where:

$\tilde{Q}i$ = The plant releases of radioiodine 131 and radioactive materials in particulate form with half-lives greater than 8 days for long term releases as defined in Section 3.1.16, in μCi. Releases shall be cumulative over the calendar quarter or year, as appropriate.

$\tilde{q}i$ = The plant releases of radioiodine 131 and radioactive materials in particulate form with half-lives greater than 8 days for short term releases as defined in Section 3.1.16, in μCi. Releases shall be cumulative over the calendar quarter or year, as appropriate.

W = The dispersion or deposition parameter (based on meteorological data defined in Section 3.5) for estimating the dose to an individual at the applicable receptor for long term releases as defined in Section 3.1.16 and Appendix I.

w = The vent dispersion or deposition parameter for estimating the dose to an individual at the applicable receptor for short term releases as calculated as in Section 3.5 and defined in Section 3.1.16 and Appendix I.

3.17 E-08 = The inverse number of seconds in a year.

Ri = The dose factor for each identified pathway, organ, and radionuclide, i, in m^2 ·mrem/yr per μCi/sec or mrem/yr per μCi/m^3. These dose factors are determined as described in Sections 3.3.4.5a-d.

3.3.4.4 Utilizing the assumptions contained in Section 3.3.4.3, these equations for the nearest resident and the 5-mile cow secondary receptor reduce to the following:

$$DN = (3.17E\text{-}8)\sum_i [Ri(I)*[Wn(in)\tilde{Q}i + wn(in)\tilde{q}i] + (Ri(G) + Ri(V))*[Wn(dep)\tilde{Q}i + wn(dep)\tilde{q}i]]$$

$$DS = (3.17E\text{-}8)\sum_i [Ri(I)*[Ws(in)\tilde{Q}i + ws(in)\tilde{q}i] + (Ri(G) + Ri(c) + Ri(V))*[Ws(dep)\tilde{Q}i + ws(dep)\tilde{q}i]]$$

Where:

DN = total dose at the nearest residence, in mrem

DS = total dose at the 5-mile cow secondary receptor, in mrem.

Wn(in) = The highest calculated annual average dispersion parameter for the inhalation pathway for the nearest residence in the unrestricted area, as defined in Appendix I.

wn(in) = The dispersion parameter Wn(in), corrected for short term releases, as defined in Appendix I.

Wn(dep)= The highest calculated annual average deposition parameter for the nearest residence in the unrestricted area, as defined in Appendix I, for all isotopes except Tritium, which uses the X/Q value instead (Wn(in)).

wn(dep)= The deposition parameter Wn(dep), corrected for short term releases, as defined in Appendix I.

Ws(in) = The highest calculated annual average dispersion parameter for the inhalation pathway at the 5-mile cow secondary receptor per Appendix I.

ws(in) = The dispersion parameter Ws(in), at the 5-mile cow secondary receptor, corrected for short term releases, as defined in Appendix I.

Ws(dep)= The highest calculated annual average deposition parameter for the 5-mile cow secondary receptor, as defined in Appendix I, for all isotopes except Tritium, which uses the X/Q value instead (Ws(in)).

ws(dep)= The deposition parameter Ws(dep), at the 5-mile cow secondary receptor, corrected for short term releases, as defined in Appendix I.

$\tilde{Q}i$ = The plant releases of radioiodine 131 and radioactive materials in particulate form with half-lives greater than 8 days for long term releases as defined earlier, (uCi).

$\tilde{q}i$ = The plant releases of radioiodine 131 and radioactive materials in particulate form with half-lives greater than 8 days for short term releases as defined earlier (uCi).

Ri (I): Inhalation pathway factor for each radionuclide, i, defined in Section 3.3.4.5.

Ri (G): Ground plane pathway factor for each radionuclide, i, defined in Section 3.3.4.5.

Ri (V): Vegetation pathway factor for each radionuclide, i, defined in Section 3.3.4.5.

Ri (C): Cow-Milk pathway factor for each radionuclide, i, defined in Section 3.3.4.5.

3.3.4.5 Calculation of Dose Factors

3.3.4.5.a Calculation of Ri (I) (X/Q) Inhalation Pathway Factor

Ri (I) $_{(X/Q)}$ = K'[(BR) a] [(DFAi) a](mrem/yr per μCi/m^3)

Where:

K' = Constant of unit conversion, 10^6 pCi/uCi

(BR) a = Breathing rate of the receptor of age group (a) in m^3/yr. (from Regulatory Guide 1.109, Table E-5)

Infant = 1400 (m^3/yr) Child = 3700 (m^3/yr) Adult/Teen = 8000 (m^3/yr)

(DFAi) a = The maximum organ inhalation dose factor for the receptor of age group (a) for the i_{th} radionuclide, in mrem/pCi. The total body is considered as an organ in the selection of (DFAi)a.

Child and infant inhalation dose factors are generally more restrictive, however, doses from each age group are calculated separately. The (DFAi)a values are listed in Tables 3-1a through 3-1d. The Ri values for the inhalation pathway are listed in Table 3-10a through 3-10d.

3.3.4.5.b Calculation of Ri(G)(D/Q) Ground Plane Pathway Factor

$$Ri(G)_{(D/Q)} = \frac{K'K''(SF)(DFGi)(1-e^{(-kit)})}{Ki} = \frac{m^2 \cdot mrem/yr}{uCi/\sec}$$

Where:

K' = A constant of conversion, 10^6 pCi/μCi.

K" = A constant of conversion, 8760 hr/yr.

ki = Decay constant for the i_{th} radionuclide sec^{-1}.

t = The exposure time, 4.73 x 10^8 sec (15 years).

DFGi = The ground plane dose conversion factor for i_{th} radionuclide (mrem/hr per pCi/m^2).

SF = Shielding factor (dimensionless) = 0.7 (from Table E-15 of Regulatory Guide 1.109).

The values of DFGi were obtained from Table E-6 of Regulatory Guide 1.109 and are listed in Table 3-2. These values were used to calculate Ri(G), which is the same for all age groups and organs and is listed in Table 3-13.

3.3.4.5.c Calculation of Ri(V)(D/Q) - Vegetation Pathway Factor

For non-Tritium isotopes:

$$Ri(V)_{(D/Q)} = \frac{K'(r)}{Yv(ki+kw)} * (DFLi)a * [(UaL)fL * e^{(-kitL)} + (UaS)fg * e^{(-kith)}]$$

Where:

K' = Constant of conversion, 10^6 pCi/μCi

r = Dimensionless correction factor for Iodine and Particulate from Table E-15 of Reg Guide 1.109: 0.2 for particulates, 1.0 for radioiodine

$DFLi_a$ = Reg Guide 1.109 dose factor for each nuclide, in mrem/pCi, for each age group.

UaL = Consumption rate of fresh leafy vegetation by the receptor in age group (a) in kg/yr.

ki = Decay constant for the radionuclide, in sec^{-1}

UaS = Consumption rate of non-leafy vegetables by the receptor in age group (a) in kg/yr.

fL = The fraction of the annual intake of leafy vegetation grown locally.

fg = The fraction of the annual intake of non-leafy vegetation grown locally.

kw = Decay constant for removal of activity on leaf and plant surfaces by weathering, 5.73E-7 sec^{-1} (corresponding to a 14 day half-life).

tL = The average time between harvest of leafy vegetation and its consumption, in seconds.

th = The average time between harvest of stored vegetation and its consumption, in seconds.

Yv = The vegetation area density in kg/m^2.

The concentration of Tritium in vegetation is based on the airborne concentration rather than the deposition. Therefore, the Ri(V) is based on X/Q:

$$(RiV)_{(X/Q)} = K'K''[(UaL)fL+(UaS)fg](DFLi)a\ (0.75)(0.5/H)\ (mrem/yr\ per\ \mu Ci/m^3)$$

Where:

K'' = A constant of unit conversion, 1000 gm/kg

H = Absolute humidity of the atmosphere in gm/m^3. This value may be considered as 8 gm/m^3 (NUREG 0133, pg 27) in lieu of site specific information.

0.75 = The fraction of total feed that is water

0.5 = The ratio of the specific activity of the feed grass water to the atmospheric water

DFLia for each age group is given in Tables 3-3a through 3-3d and Ri(V) values are listed in Table 3-11a through 3-11c.

Ri(V) Parameters Are From The Following Sources:

PARAMETER	VALUE	Reg Guide 1.109 Table
r (dimensionless)	1.0 for iodines & 0.2 for part.	E-15
(DFLi) a (mrem/pCi)	Each radionuclide	E-11 to E-14
UaL (kg/yr) - infant	0	E-5
- child	26	E-5
- teen	42	E-5
- adult	64	E-5
UaS (kg/yr) - infant	0	E-5
- child	520	E-5
- teen	630	E-5
- adult	520	E-5
fL (dimensionless)	1.0	E-15
fg (dimensionless)	0.76	E-15
tL (seconds)	8.6E4 (1 day)	E-15
th (seconds)	5.18E6 (60 days)	E-15
Yv (kg/m^2)	2.0	E-15

3.3.4.5.d Calculation of Ri(c)(D/Q) - Grass-Cow-Milk Pathway Factor

(applied only as required by the Land Use Census)

$$\text{Ri(c) (D/Q)} = \frac{K(QF)(Uap)(Fm)(r)(DFLi)a}{ki + kw} * \left\langle [\frac{fpfs}{Yp} + \frac{1 - fpfs}{Ys}] * e^{(-kith)} \right\rangle * e^{(-kitf)} * e^{(-kitf)}$$

Where:

K' = Constant of conversion, 10^6 pCi/μCi

QF = Cow's consumption rate in kg/day (wet weight)

Uap= Receptor's milk consumption rate for age (a) in liters/yr.

Yp = Agricultural productivity by unit area of pasture grass in kg/m^2.

Ys = Agricultural productivity by unit area of stored feed in kg/m^2.

Fm = Stable element transfer coefficients in days/liters, Table 2-2.

r = Fraction of deposited activity retained on cow's feed grass.

(DFLi)a= The maximum organ ingestion dose for the radionuclide, I, for the receptor in age group (a) in mrem/pCi. Values are from Tables E-11 through E-14 of Regulatory Guide 1.109 and are listed in Tables 3-3a through 3-3d.

ki = Decay constant for the radionuclide in sec^{-1}.

kw = Decay constant for removal of activity on leaf and plant surfaces by weathering, 5.73E-7 sec^{-1} (corresponding to a 14 day half-life).

tf = The transport time from pasture, to cow, to milk, to receptor in sec.

th = The transport time from pasture, to harvest, to cow, to milk, to receptor, in sec.

fp = Fraction of the year that the cow is on pasture.

fs = Fraction of the cow feed that is pasture grass while the cow is on pasture.

Note: The values of Ri (c) are listed in Table 3-12a-d.

The concentration of Tritium in milk is based on the airborne concentration rather than the deposition. Therefore, the Ri (c) is based on X/Q:

Ri (c) (X/Q) = K'K" (Fm) (QF) (Uap) (DFLi) a 0.75 (0.5/H) (mrem/yr per μCi/m^3)

Where:

K" = A constant of unit conversion, 10^3 m/kg;

H = Absolute humidity of the atmosphere in gm/m^3;

0.75 = The fraction of total feed that is water;

0.5 = The ratio of the specific activity of the feed grass water to the atmospheric water;

Other parameters and values are given above. The value of H may be considered as 8 $grams/meter^3$ (NUREG 0133, PAGE 27) in lieu of site specific information.

Ri(c) Parameters Are Taken From The Following Sources:

PARAMETER	VALUE	TABLE R.G. 1.109
r (dimensionless)	1.0 for radioiodine	E-15
	0.2 for particulates	E-15
Fm (days/liter)	Each stable element	E-1
Uap (liters/year) - infant	330	E-5
- child	330	E-5
- teen	400	E-5
- adult	310	E-5
(Dfli) a (mrem/pCi)	Each radionuclide	E-11 to E-14
Yp (kg/m^2)	0.7	E-15
Ys (kg/m^2)	2.0	E-15
tf (seconds)	1.73E5 (2 days)	E-15
th (seconds)	7.78E6 (90 days)	E-15
Qf (kg/day)	50	E-15
fs	Assumed to be unity	
fp	Assumed to be unity	

Stable Element Transfer data is listed in Table 3-2 (Reg Guide 1.109, Table E-1). The (DFLi)a values for 4 age groups are given in Tables 3-3a through 3-3d.

3.4 Backup Simplified Dose Methodology

The dose calculation procedures described in this section are provided for use as a backup whenever the primary computer methodology cannot be followed.

3.4.1 Instantaneous Dose Rates - Noble Gas Releases

Note: While true instantaneous rates and limits generally apply, a one hour average can be chosen as the defining interval for determining process radiation monitor response or release rate determinations.

3.4.1.1 This section describes the alternative calculational methods to meet the requirements of Section 3.2.1 and the calculational results per Section 3.3.1.

3.4.1.2 To determine an acceptable noble gas instantaneous release rate in μCi/sec, a standard isotopic mixture of noble gas is assumed. This isotopic mixture was measured for a mixture of isotopes typical of reactor coolant with exposed fuel. This requirement is evaluated at the worst sector of the unrestricted area boundary. Based on this isotopic mixture, standard weighted values of K, L, M, and N is determined using the technique presented in paragraph 3.3.1.2, and the Ki, Li, Mi, and Ni values from Tables 3-4 through 3-7. The data and results of this calculation are shown in Table 3-8.

3.4.1.3 Utilizing the equations from Paragraph 3.3.1.2 and the values from Table 3-8, conservative IPEC maximum (site) release limits for all noble gases in μCi/sec are calculated in Appendix I, page 2.

The resulting calculations establish a default instantaneous noble gas release rate limit of **140,000** μCi/sec for the site, split equally between the units for conservativism. While both Units 2 and 3 originally apply the instantaneous limit at 70,000 μCi/sec, any one unit can use up to nearly 100% of the site limit, should it become necessary.

Generally, as these limits begin to apply, actual sample data is used to determine the true instantaneous limit associated with 10CFR20 requirements, for both whole body and skin dose rate, as shown in Appendix I.

3.4.1.4 For individual release rate determinations, alternate computer codes and/or a procedurally driven hand calculation template serve as back up methodologies should the primary computer method be inoperable. These methods comply with calculations in Section 3.3.

3.4.2 Instantaneous Dose Rates-I-131, Particulates w/t½ >8 days, & H-3

3.4.2.1 This section describes the alternative calculational method to meet the requirements of Section 3.2.1. The purposes of this method is to provide backup calculational techniques, both computer aided and hand calculated, which approximate section 3.3.2.

3.4.2.2 To determine an acceptable iodine and particulate release rate, it is assumed that the limit on these releases shall be met if

a) the total noble gas concentration in the VC is at least a factor of 20,000 more than the concentration of radioiodine and long lived particulates, or

b) VC iodines and long lived particulates are less than 1E-7 μCi/cc.

Both these conditions have historically been the case, assuring that noble gas activity continues to be more limiting.

3.4.2.3 Backup instantaneous dose rate calculations can be performed with an alternate computer code or by formatted hand calculations which are identical to section 3.3.2.

3.4.3 Time Averaged Dose - Noble Gas Releases

3.4.3.1 This section describes alternative methods of meeting the requirements of Paragraphs 3.2.2 and 3.2.4, and the alternative methods of implementing the calculation techniques presented in Section 3.3.3.

3.4.3.2 The values of $\overline{Ki}$, $\overline{Li}$, $\overline{Mi}$, and $\overline{Ni}$ for either unit's Plant Vent (PV) mixed mode releases, and the potential Unit 3 Monitor Tank (MT) ground plane releases are determined for each release using the dispersion parameter for the site boundary in the worst sector. The calculations are as follows:

$$PV\overline{Ki} = (Ki)*(X/Q)PV \quad \text{and} \quad MTKi = (\overline{Ki})*(X/Q)MT$$

$$PV\overline{Li} = (Li)*(X/Q)PV \quad \text{and} \quad MTLi = (\overline{Li})*(X/Q)MT$$

$$PV\overline{Mi} = (Mi)*(X/Q)PV \quad \text{and} \quad MTMi = (\overline{Mi})*(X/Q)MT$$

$$PV\overline{Ni} = (Ni)*(X/Q)MT \quad \text{and} \quad MTNi = (\overline{Ni})*(X/Q)MT$$

Where:

Ki = The total body dose factor due to gamma emissions for each identified noble gas radionuclide in mrem/yr per μCi/m^3 (unit-specific finite cloud correction used).

Li = The skin dose factor due to beta emissions for each identified noble gas radionuclide in mrem/yr per μCi/m^3.

Mi = The air dose factor due to gamma emissions for each identified noble gas radionuclide in mrem/yr per μCi/m^3 (unit-specific finite cloud correction used).

Ni = The air dose factor due to beta emissions for each identified noble gas radionuclide in mrad/yr per μCi/m^3.

(X/Q)PV = The highest calculated annual average dispersion parameter for the noble gas pathway at the unrestricted area boundary, applicable to plant vent mixed mode releases, per Appendix I.

(X/Q)MT = The highest calculated annual average X/Q for ground level monitor tank noble gas release pathway, 5.00E-5 sec/m^3.

3.4.3.3 Determine weighted average dose factors as follows:

All values of Ki, Li, Mi, and Ni are shown in Table 3-4 through 3-7 for the unrestricted area boundary.

Each of the following expressions is summed over all the nuclides:

PV Kt = $\sum[Ki*(Ci/Ct)]$

PV Lt = $\sum[Li*(Ci/Ct)]$

PV Mt = $\sum[Mi*(Ci/Ct)]$

PV Nt = $\sum[Ni*(Ci/Ct)]$

For the monitor tank pathway, MTKt, MTLt, MTMt, and MTNt are calculated in the same way as for plant vent (PV) releases above, except that Ci and Ct apply to gaseous activity for the monitor tank vent pathway.

Where:

Ci = Concentration of isotope i (μCi/cc) in analysis, t (for either PV or MT pathway)

Ct = Concentration of all noble gas isotopes (μCi/cc) for a specific analysis, *t*, (for either the PV or MT pathway)

These calculations can be performed by hand (via formatted procedure) or by using approved alternate computer codes to compute all or part of the dose calculation.

3.4.3.4 Resultant doses are compared with limits as per 3.3.3. The sum of all releases in a calendar quarter or calendar year should be compared to the limits of Section 3.2.2 and 3.2.4 as appropriate for gamma air dose and beta air dose.

3.4.4 Time Averaged Dose-Iodine 131 and Particulates w/t½ days& H-3

3.4.4.1 This section describes the alternate methods of meeting the requirements of Paragraphs 3.2.3 and 3.2.4 and of implementing the calculational techniques presented in Section 3.3.4.

3.4.4.2 If the primary computer method is inoperable, dose calculations can be performed by 1) an alternate computer code which complies with Section 3.3.4, using all identified Iodine and Particulate isotopes; or 2) hand calculations (via a formalized departmental procedure) which comply with Section 3.3.4.

3.4.4.3 Quarterly and annual Iodine, Particulate, and Tritium dose contributions are summed and compared to limits described in Section 3.2.3.

3.5 Calculation of Meteorological Dispersion Factors

3.5.1 For the purpose of these calculations, the site boundary was taken to be the unrestricted area boundary. The distances to the site boundary and nearest residents are shown in Table 3-9 for each of the 16 major compass sectors. Site boundary distances at IPEC are measured from the applicable unit's Plant Vent, while distances to the nearest resident in each of these sectors is measured from a common point, the Unit 1 superheater stack.

In the sectors where the Hudson River forms the site or exclusion area boundary, the near shore is assumed as the boundary of the "unrestricted area", because, in general, IPEC does not attempt to control population on the river. Potential confusion regarding the near or far shore for this application is effectively removed per the definition of "unrestricted area" in NUREG 0133 (Ref. 1, Section 2.2, Page 6). This section states that these criteria do "not include areas over water bodies" and the river is therefore not applicable for evaluating the maximum unrestricted area boundary concentrations.

3.5.2 The atmospheric transport and diffusion model used in the evaluation of dispersion and deposition factors is the sector-average straight-line model in Regulatory Guide 1.111 (Ref. 15) for mixed-mode releases with plume-rise effects, downwash, and building-wake correction.

The analyses were carried out using the AEOLUS-3 computer code (Ref. 16) and are documented in detail in Ref. 17. Hourly meteorological data was collected from 1981 through 1990, and updated with data from 1992 to 2002, in accordance with the accuracy requirements of Safety (Draft Regulatory) Guide 1.23 (Ref. 18). The data recovery index for these periods was in excess of 99%.

Comparison of the new meteorological data (1992 to 2002) with previous data (1981 to 1990) continues to show little difference in the overall dispersion conditions at the site. In the analyses, wind-speed coefficients in Regulatory Guide 1.111 were used to extrapolate the measured wind speeds to the height of the main vent (on top of the primary containment). Also, the regulatory plume entrainment model was used to determine plume partitioning between ground-level and elevated releases, and no credit was taken for decay and depletion in transit.

Recirculation effects were accounted for by confining in-valley flows within the valley out to a distance of 10 miles (up or down the valley) and allowing a portion of them to return to the site without additional dilution.

3.5.3 To meet the calculational requirements of Paragraphs 3.2.1, 3.2.2, and 3.2.4 the annual average dispersion factors are calculated approximately once every ten years, for each compass sector at the site unrestricted area boundary. The most restrictive meteorological dispersion and deposition factors determined from this accumulation of data is currently presented in Attachment I.

The distances to the site boundary and nearest resident in each sector were determined from the land use census and global positioning technology, and are listed in Table 3-9.

For the monitor tank release pathway, ground level dispersion values (X/Q) were assessed using the methodology discussed in Section 3.5.2. The most restrictive X/Q was determined to be in the SW sector at 350m with a value of 5.00E-5 sec/m^3 (concentration X/Q per Ref. 21). This value is specific only to the Unit 3 Monitor Tank pathway for noble gas dose at the site boundary.

3.5.4 To meet the calculational requirements of Paragraph 3.2.3 (Iodines and Particulates), the annual average deposition and dispersion parameters were calculated for the nearest residents in each of the compass sectors. Because no real dairy exists within 5 miles of the power plant, a hypothetical grass-cow-milk pathway and its dispersion and deposition factors are included, but turned on or off according to the applicable annual Land Use Census. Dispersion and deposition parameters for these locations were calculated using the models and data described in Sec. 3.5.2, and are represented as:

Wn(in) = The highest calculated annual average dispersion parameters for the inhalation pathway for the nearest residence in the unrestricted area, per Attachment I.

Wn(dep)= The highest calculated annual average deposition parameters for the ground plane and vegetation pathways for the nearest residence in the unrestricted area, per Attachment I. For Tritium in the vegetation pathway, Wn(in) is used.

Ws(in) = The highest calculated annual average dispersion parameters for the inhalation pathway at the 5-mile cow secondary receptor, per Attachment I.

Ws(dep)= The highest calculated annual average deposition parameters for the cow-milk, vegetation, and ground plane pathways at the 5-mile secondary receptor, per Attachment I. For Tritium at this location, Ws(in) is used.

NOTE: For the monitor tank pathway, iodines and particulates are effectively removed by demineralization, therefore deposition parameters for this pathway are not applicable.

3.5.5 To meet the calculational requirements of Paragraphs 3.2.2, 3.2.3 and 3.2.4, and the calculation methodologies described in Sections 3.3.4 and 3.3.3, short term release dispersion and deposition factors may need to be calculated.

Short term release dispersion and deposition factors are determined from the long term annual average parameters and a method presented by Sagendorf in NUREG 0324 (Ref. 5) as recommended by NUREG 0133 (Ref. 1, Section 3.3, Page 8). This method makes use of a factor (F), developed for a particular compass sector and distance, which is simply multiplied by the annual average dispersion or deposition parameter for the same sector and distance to develop the corresponding short-term parameter.

This factor is defined as: $F = [NTOTAL/8760]^m$

Where:

F = The non-dimensional correction factor used to convert annual average dispersion or deposition factors to short term dispersion or deposition factors.

NTOTAL = The total duration of a short-term release (or releases) in hours, during a chosen reporting period.

m = $$\frac{\log(ANMX / F15MX)}{\log(8760)}$$

8760 = The total number of hours in a year.

ANMX = The calculated historical average dispersion (sec/m^3) or deposition (m^{-2}) factor for the compass sector and distance of interest.

F15MX = The short term dispersion (sec/m^3) or deposition (m^{-2}) factor for the compass sector and distance of interest. This is the 15th percentile value such that worse weather conditions can only exist 15% of the time and better conditions 85% of the time.

The atmospheric transport and diffusion model used in the evaluation of short-term dispersion and deposition parameters (F15MX) is the Gaussian plume-centerline model in Regulatory Guide 1.145 (Ref. 19), adapted for mixed-mode releases with plume-rise effects, downwash, building-wake correction and plume meander considerations.

As was the case with the annual average parameters, the analyses were carried out using the AEOLUS-3 computer code (Ref. 16) and the most recent 10-year hourly meteorological data. They are documented in detail in Reference 17.

Note that in line with the guidance in NUREG-0133, Sec. 5.3.1, page 29, short-term releases (equal to or less than 500 hours per year) are considered to be cumulative over the calendar quarter or year, as appropriate. However, from Sec. 3.1.16 of the ODCM Part II, and in line with Sec. 3.3, page 8 of NUREG-0133, gas-decay tank releases and containment purges have been determined to be sufficiently random so as to permit use of the long-term dispersion and deposition parameters for assessment of their radiological impact.

3.5.6 The short term 15th percentile dispersion or deposition factor for use in the equation of the preceding paragraphs and the simplified F factor equation for mixed-mode releases to critical locations of each IPEC unit are as follows:

a) Site Boundary Noble Gas:

		Unit 2	Unit 3
F15MX	=	7.724E-5 sec/m^3	1.590E-4 sec/m^3
ANMX	=	2.219E-6 sec/m^3	4.470E-6 sec/m^3

$$m = \frac{\log(ANMX / F15MX)}{\log(8760)} = -0.391 \qquad -0.393$$

F = [NTOTAL/8760]$^{-0.391}$ [NTOTAL/8760]$^{-0.393}$

b) Nearest Residence Inhalation:

		Unit 2	Unit 3
F15MX	=	4.992E-5 sec/m^3	4.888E-5 sec/m^3
ANMX	=	1.030E-6 sec/m^3	1.016E-6 sec/m^3

$$m = \frac{\log(ANMX / F15MX)}{\log(8760)} = -0.428 \qquad -0.427$$

F = [NTOTAL/8760]$^{-0.428}$ [NTOTAL/8760]$^{-0.427}$

c) Nearest Residence Deposition:

Unit 2 Unit 3

F15MX	=	3.995E-7 m^{-2}	4.019E-7 m^{-2}
ANMX	=	7.517E-9 m^{-2}	7.451E-9 m^{-2}

$$m = \frac{\log(ANMX / F15MX)}{\log(8760)} = -0.438 \qquad -0.439$$

F = [NTOTAL/8760]$^{-0.438}$ [NTOTAL/8760]$^{-0.439}$

d) 5-mile Inhalation:

		Same for both Units 2 and 3
F15MX	=	6.192E-6 sec/m^3
ANMX	=	7.223E-7 sec/m^3

$$m = \frac{\log(ANMX/F15MX)}{\log(8760)} = -0.237$$

F = [NTOTAL/8760]$^{-0.237}$

e) 5-mile Deposition:

		Same for both Units 2 and 3
F15MX	=	9.501E-9 m^{-2}
ANMX	=	1.350E-9 m^{-2}

$$m = \frac{\log(ANMX/F15MX)}{\log(8760)} = -0.215$$

F = [NTOTAL/8760]$^{-0.215}$

f) The slopes ("m") for ground level short term correction factors can be calculated in a similar fashion, from ground level data found in Reference 17. For example:

	Unit 2	Unit 3
Site Boundary Noble Gas:	-0.390	-0.397
Nearest Resident Inhalation:	-0.427	-0.427
Nearest Resident Deposition:	-0.455	-0.455
5-mile Inhalation:	-0.235	-0.235
5-mile Deposition:	-0.212	-0.212

3.6 Justification for and Use of Finite Cloud Assumption for Assessing Site Boundary Dose

Two models are available for the computation of doses from external gamma radiation:

a) The semi-infinite cloud model, which is conservatively applicable only for ground-level releases assumes ground level airborne concentrations are the same throughout a cloud that is large in extent relative to the photon path lengths in air.

b) The finite-cloud model, which takes into consideration the actual plume dimensions and the elevation above the receptor.

The semi-infinite cloud model (which is normally used in a variety of applications because of its simplicity) has two drawbacks:

1. It could be overly conservative for receptors close to the release point (particularly for ground-level releases under stable conditions with limited plume dispersion) due to the basis that the high concentration at the receptor is assumed to exist everywhere, and;

2. It is not suitable for elevated releases since gamma radiation emanating from the radioactive cloud could still reach a receptor on the ground even though the plume is still aloft (the concentration at ground level is equal to zero).

For practical applications, it is possible to define isotope-dependent finite-cloud correction factors to express the difference in external radiation exposures between a finite cloud (which may be either at ground level or elevated) and a semi-finite cloud. Physically, when such a correction factor is applied to the calculated ground-level concentration resulting from a given plume, it will define the equivalent concentration in a semi-infinite cloud which would yield the same external exposure as the finite cloud. Such a correction factor is a function of both the airborne radionuclide energy and of plume dispersion under the prevailing conditions. At distant receptors, where the plume dimensions reach limiting conditions, such correction factors reduce to unity.

The AEOLUS-3 code (which was used for the determination of the annual average dispersion and deposition parameters listed in Section 3.5), also has the capability of providing a basis for computation of isotope-specific finite-cloud correction factors based on the models in "Meteorology and Atomic Energy" (Ref. 20, Sec. 7.5.2). The code was used (along with the mixed-mode release option and the 10-year hourly meteorological data base) for the determination of the correction factors as would be applicable at the IPEC site boundary. Note that the correction factors can be viewed as adjustment factors to the dose conversion factors in Regulatory Guide 1.109 (Ref. 3) for immersion in semi-infinite clouds. The nuclide specific correction factors and adjusted dose factors are presented in Tables 3-4 and 3-6 for the IPEC site boundary.

For the Unit 3 Monitor Tank pathway (ground release concentration X/Q), use of the finite cloud corrected data presented in tables 3-4 and 3-6 will provide a conservative result. The conservativism is due to the indicated correction factors for the mixed mode case yielding larger correction factors per nuclide. However, in the event that a ground level specific finite cloud correction factor is desired (which will yield lower calculated doses) the Xe-133 gamma X/Q value may be used as described in Reference 21.

Table 3-1a

ADULT INHALATION DOSE FACTORS

(mrem per pCi inhaled)

Isotope	BONE	LIVER	TOT BODY	THYROID	KIDNEY	LUNG	GILLI
H-3	0.00E+00	1.58E-07	1.58E-07	1.58E-07	1.58E-07	1.58E-07	1.58E-07
Be-7	0.00E+00	0.00E+00	0.00E+00	0.00E+00	0.00E+00	0.00E+00	0.00E+00
Na-24	1.28E-06	1.28E-06	1.28E-06	1.28E-06	1.28E-06	1.28E-06	1.28E-06
P-32	1.65E-04	9.64E-06	6.26E-06	0.00E+00	0.00E+00	0.00E+00	1.08E-05
Cr-51	0.00E+00	0.00E+00	1.25E-08	7.44E-09	2.85E-09	1.80E-06	4.15E-07
Mn-54	0.00E+00	4.95E-06	7.87E-07	0.00E+00	1.23E-06	1.75E-04	9.67E-06
Mn-56	0.00E+00	1.55E-10	2.29E-11	0.00E+00	1.63E-10	1.18E-06	2.53E-06
Fe-55	3.07E-06	2.12E-06	4.93E-07	0.00E+00	0.00E+00	9.01E-06	7.54E-07
Fe-59	1.47E-06	3.47E-06	1.32E-06	0.00E+00	0.00E+00	1.27E-04	2.35E-05
Co-58	0.00E+00	1.98E-07	2.59E-07	0.00E+00	0.00E+00	1.16E-04	1.33E-05
Co-60	0.00E+00	1.44E-06	1.85E-06	0.00E+00	0.00E+00	7.46E-04	3.56E-05
Ni-63	5.40E-05	3.93E-06	1.81E-06	0.00E+00	0.00E+00	2.23E-05	1.67E-06
Ni-65	1.92E-10	2.62E-11	1.14E-11	0.00E+00	0.00E+00	7.00E-07	1.54E-06
Cu-64	0.00E+00	1.83E-10	7.69E-11	0.00E+00	5.78E-10	8.48E-07	6.12E-06
Zn-65	4.05E-06	1.29E-05	5.82E-06	0.00E+00	8.62E-06	1.08E-04	6.68E-06
Zn-69	4.23E-12	8.14E-12	5.65E-13	0.00E+00	5.27E-12	1.15E-07	2.04E-09
Br-83	0.00E+00	0.00E+00	3.01E-08	0.00E+00	0.00E+00	0.00E+00	2.90E-08
Br-84	0.00E+00	0.00E+00	3.91E-08	0.00E+00	0.00E+00	0.00E+00	2.05E-13
Br-85	0.00E+00	0.00E+00	1.60E-09	0.00E+00	0.00E+00	0.00E+00	0.00E+00
Rb-86	0.00E+00	1.69E-05	7.37E-06	0.00E+00	0.00E+00	0.00E+00	2.08E-06
Rb-88	0.00E+00	4.84E-08	2.41E-08	0.00E+00	0.00E+00	0.00E+00	4.18E-19
Rb-89	0.00E+00	3.20E-08	2.12E-08	0.00E+00	0.00E+00	0.00E+00	1.16E-21
Sr-89	3.80E-05	0.00E+00	1.09E-06	0.00E+00	0.00E+00	1.75E-04	4.37E-05
Sr-90	1.24E-02	0.00E+00	7.62E-04	0.00E+00	0.00E+00	1.20E-03	9.02E-05
Sr-91	7.74E-09	0.00E+00	3.13E-10	0.00E+00	0.00E+00	4.56E-06	2.39E-05
Sr-92	8.43E-10	0.00E+00	3.64E-11	0.00E+00	0.00E+00	2.06E-06	5.38E-06
Y-90	2.61E-07	0.00E+00	7.01E-09	0.00E+00	0.00E+00	2.12E-05	6.32E-05
Y-91m	3.26E-11	0.00E+00	1.27E-12	0.00E+00	0.00E+00	2.40E-07	1.66E-10
Y-91	5.78E-05	0.00E+00	1.55E-06	0.00E+00	0.00E+00	2.13E-04	4.81E-05
Y-92	1.29E-09	0.00E+00	3.77E-11	0.00E+00	0.00E+00	1.96E-06	9.19E-06
Y-93	1.18E-08	0.00E+00	3.26E-10	0.00E+00	0.00E+00	6.06E-06	5.27E-05
Zr-95	1.34E-05	4.30E-06	2.91E-06	0.00E+00	6.77E-06	2.21E-04	1.88E-05
Zr-97	1.21E-08	2.45E-09	1.13E-09	0.00E+00	3.71E-09	9.84E-06	6.54E-05
Nb-95	1.76E-06	9.77E-07	5.26E-07	0.00E+00	9.67E-07	6.31E-05	1.30E-05
Mo-99	0.00E+00	1.51E-08	2.87E-09	0.00E+00	3.64E-08	1.14E-05	3.10E-05
Tc-99m	1.29E-13	3.64E-13	4.63E-12	0.00E+00	5.52E-12	9.55E-08	5.20E-07
Tc-101	5.22E-15	7.52E-15	7.38E-14	0.00E+00	1.35E-13	4.99E-08	1.36E-21
Ru-103	1.91E-07	0.00E+00	8.23E-08	0.00E+00	7.29E-07	6.31E-05	1.38E-05
Ru-105	9.88E-11	0.00E+00	3.89E-11	0.00E+00	1.27E-10	1.37E-06	6.02E-06
Ru-106	8.64E-06	0.00E+00	1.09E-06	0.00E+00	1.67E-05	1.17E-03	1.14E-04
Ag-110m	1.35E-06	1.25E-06	7.43E-07	0.00E+00	2.46E-06	5.79E-04	3.78E-05
Sb-122	0.00E+00	0.00E+00	0.00E+00	0.00E+00	0.00E+00	0.00E+00	0.00E+00
Sb-124	3.90E-06	7.36E-08	1.55E-06	9.44E-09	0.00E+00	3.10E-04	5.08E-05
Sb-125	6.67E-06	7.44E-08	1.58E-06	6.75E-09	0.00E+00	2.18E-04	1.26E-05

Table 3-1a

ADULT INHALATION DOSE FACTORS

(mrem per pCi inhaled)

Isotope	BONE	LIVER	TOT BODY	THYROID	KIDNEY	LUNG	GILLI
Te-125m	4.27E-07	1.98E-07	5.84E-08	1.31E-07	1.55E-06	3.92E-05	8.83E-06
Te-127m	1.58E-06	7.21E-07	1.96E-07	4.11E-07	5.72E-06	1.20E-04	1.87E-05
Te-127	1.75E-10	8.03E-11	3.87E-11	1.32E-10	6.37E-10	8.14E-07	7.17E-06
Te-129m	1.22E-06	5.84E-07	1.98E-07	4.30E-07	4.57E-06	1.45E-04	4.79E-05
Te-129	6.22E-12	2.99E-12	1.55E-12	4.87E-12	2.34E-11	2.42E-07	1.96E-08
Te-131m	8.74E-09	5.45E-09	3.63E-09	6.88E-09	3.86E-08	1.82E-05	6.95E-05
Te-131	1.39E-12	7.44E-13	4.49E-13	1.17E-12	5.46E-12	1.74E-07	2.30E-09
Te-132	3.25E-08	2.69E-08	2.02E-08	2.37E-08	1.82E-07	3.60E-05	6.37E-05
I-130	5.72E-07	1.68E-06	6.60E-07	1.42E-04	2.61E-06	0.00E+00	9.61E-07
I-131	3.15E-06	4.47E-06	2.56E-06	1.49E-03	7.66E-06	0.00E+00	7.85E-07
I-132	1.45E-07	4.07E-07	1.45E-07	1.43E-05	6.48E-07	0.00E+00	5.08E-08
I-133	1.08E-06	1.85E-06	5.65E-07	2.69E-04	3.23E-06	0.00E+00	1.11E-06
I-134	8.05E-08	2.16E-07	7.69E-08	3.73E-06	3.44E-07	0.00E+00	1.26E-10
I-135	3.35E-07	8.73E-07	3.21E-07	5.60E-05	1.39E-06	0.00E+00	6.56E-07
Cs-134	4.66E-05	1.06E-04	9.10E-05	0.00E+00	3.59E-05	1.22E-05	1.30E-06
Cs-136	4.88E-06	1.83E-05	1.38E-05	0.00E+00	1.07E-05	1.50E-06	1.46E-06
Cs-137	5.98E-05	7.76E-05	5.35E-05	0.00E+00	2.78E-05	9.40E-06	1.05E-06
Cs-138	4.14E-08	7.76E-08	4.05E-08	0.00E+00	6.00E-08	6.07E-09	2.33E-13
Ba-139	1.17E-10	8.32E-14	3.42E-12	0.00E+00	7.78E-14	4.70E-07	1.12E-07
Ba-140	4.88E-06	6.13E-09	3.21E-07	0.00E+00	2.09E-09	1.59E-04	2.73E-05
Ba-141	1.25E-11	9.41E-15	4.20E-13	0.00E+00	8.75E-15	2.42E-07	1.45E-17
Ba-142	3.29E-12	3.38E-15	2.07E-13	0.00E+00	2.86E-15	1.49E-07	1.96E-26
La-140	4.30E-08	2.17E-08	5.73E-09	0.00E+00	0.00E+00	1.70E-05	5.73E-05
La-142	8.54E-11	3.88E-11	9.65E-12	0.00E+00	0.00E+00	7.91E-07	2.64E-07
Ce-141	2.49E-06	1.69E-06	1.91E-07	0.00E+00	7.83E-07	4.52E-05	1.50E-05
Ce-143	2.33E-08	1.72E-08	1.91E-09	0.00E+00	7.60E-09	9.97E-06	2.83E-05
Ce-144	4.29E-04	1.79E-04	2.30E-05	0.00E+00	1.06E-04	9.72E-04	1.02E-04
Pr-143	1.17E-06	4.69E-07	5.80E-08	0.00E+00	2.70E-07	3.51E-05	2.50E-05
Pr-144	3.76E-12	1.56E-12	1.91E-13	0.00E+00	8.81E-13	1.27E-07	2.69E-18
Nd-147	6.59E-07	7.62E-07	4.56E-08	0.00E+00	4.45E-07	2.76E-05	2.16E-05
W-187	1.06E-09	8.85E-10	3.10E-10	0.00E+00	0.00E+00	3.63E-06	1.94E-05
Np-239	2.87E-08	2.82E-09	1.55E-09	0.00E+00	8.75E-09	4.70E-06	1.49E-05
K-40	0.00E+00	0.00E+00	0.00E+00	0.00E+00	0.00E+00	0.00E+00	0.00E+00
Co-57	0.00E+00	8.65E-08	8.39E-08	0.00E+00	0.00E+00	4.62E-05	3.93E-06
Sr-85	4.00E-06	0.00E+00	9.70E-05	0.00E+00	0.00E+00	6.00E-05	7.60E-06
Y-88	0.00E+00	0.00E+00	0.00E+00	0.00E+00	0.00E+00	0.00E+00	0.00E+00
Nb-94	0.00E+00	0.00E+00	0.00E+00	0.00E+00	0.00E+00	0.00E+00	0.00E+00
Nb-97	2.78E-11	7.03E-12	2.56E-12	0.00E+00	8.18E-12	3.00E-07	3.02E-08
Cd-109	0.00E+00	4.90E-05	1.60E-06	0.00E+00	4.70E-05	9.10E-05	8.20E-06
Sn-113	8.20E-06	2.70E-07	5.60E-07	1.70E-07	0.00E+00	1.20E-04	1.50E-06
Ba-133	9.50E-06	4.20E-07	2.50E-06	0.00E+00	2.10E-09	1.90E-04	1.00E-05
Te-134	3.84E-12	3.22E-12	1.57E-12	3.44E-12	2.18E-11	4.34E-07	2.97E-11
Ce-139	0.00E+00	0.00E+00	0.00E+00	0.00E+00	0.00E+00	0.00E+00	0.00E+00
Hg-203	0.00E+00	0.00E+00	0.00E+00	0.00E+00	0.00E+00	0.00E+00	0.00E+00

Table 3-1b

TEEN INHALATION DOSE FACTORS

(mrem per pCi inhaled)

Isotope	BONE	LIVER	TOT BODY	THYROID	KIDNEY	LUNG	GILLI
H-3	0.00E+00	1.59E-07	1.59E-07	1.59E-07	1.59E-07	1.59E-07	1.59E-07
Be-7	0.00E+00	0.00E+00	0.00E+00	0.00E+00	0.00E+00	0.00E+00	0.00E+00
Na-24	1.72E-06	1.72E-06	1.72E-06	1.72E-06	1.72E-06	1.72E-06	1.72E-06
P-32	2.36E-04	1.37E-05	8.95E-06	0.00E+00	0.00E+00	0.00E+00	1.16E-05
Cr-51	0.00E+00	0.00E+00	1.69E-08	9.37E-09	3.84E-09	2.62E-06	3.75E-07
Mn-54	0.00E+00	6.39E-06	1.05E-06	0.00E+00	1.59E-06	2.48E-04	8.35E-06
Mn-56	0.00E+00	2.12E-10	3.15E-11	0.00E+00	2.24E-10	1.90E-06	7.18E-06
Fe-55	4.18E-06	2.98E-06	6.93E-07	0.00E+00	0.00E+00	1.55E-05	7.99E-07
Fe-59	1.99E-06	4.62E-06	1.79E-06	0.00E+00	0.00E+00	1.91E-04	2.23E-05
Co-58	0.00E+00	2.59E-07	3.47E-07	0.00E+00	0.00E+00	1.68E-04	1.19E-05
Co-60	0.00E+00	1.89E-06	2.48E-06	0.00E+00	0.00E+00	1.09E-03	3.24E-05
Ni-63	7.25E-05	5.43E-06	2.47E-06	0.00E+00	0.00E+00	3.84E-05	1.77E-06
Ni-65	2.73E-10	3.66E-11	1.59E-11	0.00E+00	0.00E+00	1.17E-06	4.59E-06
Cu-64	0.00E+00	2.54E-10	1.06E-10	0.00E+00	8.01E-10	1.39E-06	7.68E-06
Zn-65	4.82E-06	1.67E-05	7.80E-06	0.00E+00	1.08E-05	1.55E-04	5.83E-06
Zn-69	6.04E-12	1.15E-11	8.07E-13	0.00E+00	7.53E-12	1.98E-07	3.56E-08
Br-83	0.00E+00	0.00E+00	4.30E-08	0.00E+00	0.00E+00	0.00E+00	0.00E+00
Br-84	0.00E+00	0.00E+00	5.41E-08	0.00E+00	0.00E+00	0.00E+00	0.00E+00
Br-85	0.00E+00	0.00E+00	2.29E-09	0.00E+00	0.00E+00	0.00E+00	0.00E+00
Rb-86	0.00E+00	2.38E-05	1.05E-05	0.00E+00	0.00E+00	0.00E+00	2.21E-06
Rb-88	0.00E+00	6.82E-08	3.40E-08	0.00E+00	0.00E+00	0.00E+00	3.65E-15
Rb-89	0.00E+00	4.40E-08	2.91E-08	0.00E+00	0.00E+00	0.00E+00	4.22E-17
Sr-89	5.43E-05	0.00E+00	1.56E-06	0.00E+00	0.00E+00	3.02E-04	4.64E-05
Sr-90	1.35E-02	0.00E+00	8.35E-04	0.00E+00	0.00E+00	2.06E-03	9.56E-05
Sr-91	1.10E-08	0.00E+00	4.39E-10	0.00E+00	0.00E+00	7.59E-06	3.24E-05
Sr-92	1.19E-09	0.00E+00	5.08E-11	0.00E+00	0.00E+00	3.43E-06	1.49E-05
Y-90	3.73E-07	0.00E+00	1.00E-08	0.00E+00	0.00E+00	3.66E-05	6.99E-05
Y-91m	4.63E-11	0.00E+00	1.77E-12	0.00E+00	0.00E+00	4.00E-07	3.77E-09
Y-91	8.26E-05	0.00E+00	2.21E-06	0.00E+00	0.00E+00	3.67E-04	5.11E-05
Y-92	1.84E-09	0.00E+00	5.36E-11	0.00E+00	0.00E+00	3.35E-06	2.06E-05
Y-93	1.69E-08	0.00E+00	4.65E-10	0.00E+00	0.00E+00	1.04E-05	7.24E-05
Zr-95	1.82E-05	5.73E-06	3.94E-06	0.00E+00	8.42E-06	3.36E-04	1.86E-05
Zr-97	1.72E-08	3.40E-09	1.57E-09	0.00E+00	5.15E-09	1.62E-05	7.88E-05
Nb-95	2.32E-06	1.29E-06	7.08E-07	0.00E+00	1.25E-06	9.39E-05	1.21E-05
Mo-99	0.00E+00	2.11E-08	4.03E-09	0.00E+00	5.14E-08	1.92E-05	3.36E-05
Tc-99m	1.73E-13	4.83E-13	6.24E-12	0.00E+00	7.20E-12	1.44E-07	7.66E-07
Tc-101	7.40E-15	1.05E-14	1.03E-13	0.00E+00	1.90E-13	8.34E-08	1.09E-16
Ru-103	2.63E-07	0.00E+00	1.12E-07	0.00E+00	9.29E-07	9.79E-05	1.36E-05
Ru-105	1.40E-10	0.00E+00	5.42E-11	0.00E+00	1.76E-10	2.27E-06	1.13E-05
Ru-106	1.23E-05	0.00E+00	1.55E-06	0.00E+00	2.38E-05	2.01E-03	1.20E-04
Ag-110m	1.73E-06	1.64E-06	9.99E-07	0.00E+00	3.13E-06	8.44E-04	3.41E-05
Sb-122	0.00E+00	0.00E+00	0.00E+00	0.00E+00	0.00E+00	0.00E+00	0.00E+00
Sb-124	5.38E-06	9.92E-08	2.10E-06	1.22E-08	0.00E+00	4.81E-04	4.98E-05
Sb-125	9.23E-06	1.01E-07	2.15E-06	8.80E-09	0.00E+00	3.42E-04	1.24E-05

Table 3-1b

TEEN INHALATION DOSE FACTORS

(mrem per pCi inhaled)

Isotope	BONE	LIVER	TOT BODY	THYROID	KIDNEY	LUNG	GILLI
Te-125m	6.10E-07	2.80E-07	8.34E-08	1.75E-07	0.00E+00	6.70E-05	9.38E-06
Te-127m	2.25E-06	1.02E-06	2.73E-07	5.48E-07	8.17E-06	2.07E-04	1.99E-05
Te-127	2.51E-10	1.14E-10	5.52E-11	1.77E-10	9.10E-10	1.40E-06	1.01E-05
Te-129m	1.74E-06	8.23E-07	2.81E-07	5.72E-07	6.49E-06	2.47E-04	5.06E-05
Te-129	8.87E-12	4.22E-12	2.20E-12	6.48E-12	3.32E-11	4.12E-07	2.02E-07
Te-131m	1.23E-08	7.51E-09	5.03E-09	9.06E-09	5.49E-08	2.97E-05	7.76E-05
Te-131	1.97E-12	1.04E-12	6.30E-13	1.55E-12	7.72E-12	2.92E-07	1.89E-09
Te-132	4.50E-08	3.63E-08	2.74E-08	3.07E-08	2.44E-07	5.61E-05	5.79E-05
I-130	7.80E-07	2.24E-06	8.96E-07	1.86E-04	3.44E-06	0.00E+00	1.14E-06
I-131	4.43E-06	6.14E-06	3.30E-06	1.83E-03	1.05E-05	0.00E+00	8.11E-07
I-132	1.99E-07	5.47E-07	1.97E-07	1.89E-05	8.65E-07	0.00E+00	1.59E-07
I-133	1.52E-06	2.56E-06	7.78E-07	3.65E-04	4.49E-06	0.00E+00	1.29E-06
I-134	1.11E-07	2.90E-07	1.05E-07	4.94E-06	4.58E-07	0.00E+00	2.55E-09
I-135	4.62E-07	1.18E-06	4.36E-07	7.76E-05	1.86E-06	0.00E+00	8.69E-07
Cs-134	6.28E-05	1.41E-04	6.86E-05	0.00E+00	4.69E-05	1.83E-05	1.22E-06
Cs-136	6.44E-06	2.42E-05	1.71E-05	0.00E+00	1.38E-05	2.22E-06	1.36E-06
Cs-137	8.38E-05	1.06E-04	3.89E-05	0.00E+00	3.80E-05	1.51E-05	1.06E-06
Cs-138	5.82E-08	1.07E-07	5.58E-08	0.00E+00	8.28E-08	9.84E-09	3.38E-11
Ba-139	1.67E-10	1.18E-13	4.87E-12	0.00E+00	1.11E-13	8.08E-07	8.06E-07
Ba-140	6.84E-06	8.38E-09	4.40E-07	0.00E+00	2.85E-09	2.54E-04	2.86E-05
Ba-141	1.78E-11	1.32E-14	5.93E-13	0.00E+00	1.23E-14	4.11E-07	9.33E-14
Ba-142	4.62E-12	4.63E-15	2.84E-13	0.00E+00	3.92E-15	2.39E-07	5.99E-20
La-140	5.99E-08	2.95E-08	7.82E-09	0.00E+00	0.00E+00	2.68E-05	6.09E-05
La-142	1.20E-10	5.31E-11	1.32E-11	0.00E+00	0.00E+00	1.27E-06	1.50E-06
Ce-141	3.55E-06	2.37E-06	2.71E-07	0.00E+00	1.11E-06	7.67E-05	1.58E-05
Ce-143	3.32E-08	2.42E-08	2.70E-09	0.00E+00	1.08E-08	1.63E-05	3.19E-05
Ce-144	6.11E-04	2.53E-04	3.28E-05	0.00E+00	1.51E-04	1.67E-03	1.08E-04
Pr-143	1.67E-06	6.64E-07	8.28E-08	0.00E+00	3.86E-07	6.04E-05	2.67E-05
Pr-144	5.37E-12	2.20E-12	2.72E-13	0.00E+00	1.26E-12	2.19E-07	2.94E-14
Nd-147	9.83E-07	1.07E-06	6.41E-08	0.00E+00	6.28E-07	4.65E-05	2.28E-05
W-187	1.50E-09	1.22E-09	4.29E-10	0.00E+00	0.00E+00	5.92E-06	2.21E-05
Np-239	4.23E-08	3.99E-09	2.21E-09	0.00E+00	1.25E-08	8.11E-06	1.65E-05
K-40	0.00E+00	0.00E+00	0.00E+00	0.00E+00	0.00E+00	0.00E+00	0.00E+00
Co-57	0.00E+00	1.18E-07	1.15E-07	0.00E+00	0.00E+00	7.33E-05	3.93E-06
Sr-85	5.00E-06	0.00E+00	1.30E-06	0.00E+00	0.00E+00	8.80E-05	6.90E-06
Y-88	0.00E+00	0.00E+00	0.00E+00	0.00E+00	0.00E+00	0.00E+00	0.00E+00
Nb-94	0.00E+00	0.00E+00	0.00E+00	0.00E+00	0.00E+00	0.00E+00	0.00E+00
Nb-97	3.93E-11	9.72E-12	3.55E-12	0.00E+00	1.14E-11	4.91E-07	2.71E-07
Cd-109	0.00E+00	1.00E-04	3.40E-06	0.00E+00	6.70E-05	1.60E-04	8.60E-06
Sn-113	1.50E-05	4.70E-07	9.70E-07	2.90E-07	0.00E+00	2.00E-04	1.50E-06
Ba-133	4.70E-05	8.00E-07	3.30E-06	0.00E+00	2.80E-09	2.90E-04	9.70E-06
Te-134	5.31E-12	4.35E-12	3.64E-12	4.46E-12	2.91E-11	6.75E-07	1.37E-09
Ce-139	0.00E+00	0.00E+00	0.00E+00	0.00E+00	0.00E+00	0.00E+00	0.00E+00
Hg-203	0.00E+00	0.00E+00	0.00E+00	0.00E+00	0.00E+00	0.00E+00	0.00E+00

Table 3-1c

CHILD INHALATION DOSE FACTORS

(mrem per pCi inhaled)

Isotope	BONE	LIVER	TOT BODY	THYROID	KIDNEY	LUNG	GILLI
H-3	0.00E+00	3.04E-07	3.04E-07	3.04E-07	3.04E-07	3.04E-07	3.04E-07
Be-7	0.00E+00	0.00E+00	0.00E+00	0.00E+00	0.00E+00	0.00E+00	0.00E+00
Na-24	4.35E-06	4.35E-06	4.35E-06	4.35E-06	4.35E-06	4.35E-06	4.35E-06
P-32	7.04E-04	3.09E-05	2.67E-05	0.00E+00	0.00E+00	0.00E+00	1.14E-05
Cr-51	0.00E+00	0.00E+00	4.17E-08	2.31E-08	6.57E-09	4.59E-06	2.93E-07
Mn-54	0.00E+00	1.16E-05	2.57E-06	0.00E+00	2.71E-06	4.26E-04	6.19E-06
Mn-56	0.00E+00	4.48E-10	8.43E-11	0.00E+00	4.52E-10	3.55E-06	3.33E-05
Fe-55	1.28E-05	6.80E-06	2.10E-06	0.00E+00	0.00E+00	3.00E-05	7.75E-07
Fe-59	5.59E-06	9.04E-06	4.51E-06	0.00E+00	0.00E+00	3.43E-04	1.91E-05
Co-58	0.00E+00	4.79E-07	8.55E-07	0.00E+00	0.00E+00	2.99E-04	9.29E-06
Co-60	0.00E+00	3.55E-06	6.12E-06	0.00E+00	0.00E+00	1.91E-03	2.60E-05
Ni-63	2.22E-04	1.25E-05	7.56E-06	0.00E+00	0.00E+00	7.43E-05	1.71E-06
Ni-65	8.08E-10	7.99E-11	4.44E-11	0.00E+00	0.00E+00	2.21E-06	2.27E-05
Cu-64	0.00E+00	5.39E-10	2.90E-10	0.00E+00	1.63E-09	2.59E-06	9.92E-06
Zn-65	1.15E-05	3.06E-05	1.90E-05	0.00E+00	1.93E-05	2.69E-04	4.41E-06
Zn-69	1.81E-11	2.61E-11	2.41E-12	0.00E+00	1.58E-11	3.84E-07	2.75E-06
Br-83	0.00E+00	0.00E+00	1.28E-07	0.00E+00	0.00E+00	0.00E+00	0.00E+00
Br-84	0.00E+00	0.00E+00	1.48E-07	0.00E+00	0.00E+00	0.00E+00	0.00E+00
Br-85	0.00E+00	0.00E+00	6.84E-09	0.00E+00	0.00E+00	0.00E+00	0.00E+00
Rb-86	0.00E+00	5.36E-05	3.09E-05	0.00E+00	0.00E+00	0.00E+00	2.16E-06
Rb-88	0.00E+00	1.52E-07	9.90E-08	0.00E+00	0.00E+00	0.00E+00	4.66E-09
Rb-89	0.00E+00	9.33E-08	7.83E-08	0.00E+00	0.00E+00	0.00E+00	5.11E-10
Sr-89	1.62E-04	0.00E+00	4.66E-06	0.00E+00	0.00E+00	5.83E-04	4.52E-05
Sr-90	2.73E-02	0.00E+00	1.74E-03	0.00E+00	0.00E+00	3.99E-03	9.28E-05
Sr-91	3.28E-08	0.00E+00	1.24E-09	0.00E+00	0.00E+00	1.44E-05	4.70E-05
Sr-92	3.54E-09	0.00E+00	1.42E-10	0.00E+00	0.00E+00	6.49E-06	6.55E-05
Y-90	1.11E-06	0.00E+00	2.99E-08	0.00E+00	0.00E+00	7.07E-05	7.24E-05
Y-91m	1.37E-10	0.00E+00	4.98E-12	0.00E+00	0.00E+00	7.60E-07	4.64E-07
Y-91	2.47E-04	0.00E+00	6.59E-06	0.00E+00	0.00E+00	7.10E-04	4.97E-05
Y-92	5.50E-09	0.00E+00	1.57E-10	0.00E+00	0.00E+00	6.46E-06	6.46E-05
Y-93	5.04E-08	0.00E+00	1.38E-09	0.00E+00	0.00E+00	2.01E-05	1.05E-04
Zr-95	5.13E-05	1.13E-05	1.00E-05	0.00E+00	1.61E-05	6.03E-04	1.65E-05
Zr-97	5.07E-08	7.34E-09	4.32E-09	0.00E+00	1.05E-08	3.06E-05	9.49E-05
Nb-95	6.35E-06	2.48E-06	1.77E-06	0.00E+00	2.33E-06	1.66E-04	1.00E-05
Mo-99	0.00E+00	4.66E-08	1.15E-08	0.00E+00	1.06E-07	3.66E-05	3.42E-05
Tc-99m	4.81E-13	9.41E-13	1.56E-11	0.00E+00	1.37E-11	2.57E-07	1.30E-06
Tc-101	2.19E-14	2.30E-14	2.91E-13	0.00E+00	3.92E-13	1.58E-07	4.41E-09
Ru-103	7.55E-07	0.00E+00	2.90E-07	0.00E+00	1.90E-06	1.79E-04	1.21E-05
Ru-105	4.13E-10	0.00E+00	1.50E-10	0.00E+00	3.63E-10	4.30E-06	2.69E-05
Ru-106	3.68E-05	0.00E+00	4.57E-06	0.00E+00	4.97E-05	3.87E-03	1.16E-04
Ag-110m	4.56E-06	3.08E-06	2.47E-06	0.00E+00	5.74E-06	1.48E-03	2.71E-05
Sb-122	0.00E+00	0.00E+00	0.00E+00	0.00E+00	0.00E+00	0.00E+00	0.00E+00
Sb-124	1.55E-05	2.00E-07	5.41E-06	3.41E-08	0.00E+00	8.76E-04	4.43E-05
Sb-125	2.66E-05	2.05E-07	5.59E-06	2.46E-08	0.00E+00	6.27E-04	1.09E-05

Table 3-1c

CHILD INHALATION DOSE FACTORS

(mrem per pCi inhaled)

Isotope	BONE	LIVER	TOT BODY	THYROID	KIDNEY	LUNG	GILLI
Te-125m	1.82E-06	6.29E-07	2.47E-07	5.20E-07	0.00E+00	1.29E-04	9.13E-06
Te-127m	6.72E-06	2.31E-06	8.16E-07	1.64E-06	1.72E-05	4.00E-04	1.93E-05
Te-127	7.49E-10	2.57E-10	1.65E-10	5.30E-10	1.91E-09	2.71E-06	1.52E-05
Te-129m	5.19E-06	1.85E-06	8.22E-07	1.71E-06	1.36E-05	4.76E-04	4.91E-05
Te-129	2.64E-11	9.45E-12	6.44E-12	1.93E-11	6.94E-11	7.93E-07	6.89E-06
Te-131m	3.63E-08	1.60E-08	1.37E-08	2.64E-08	1.08E-07	5.56E-05	8.32E-05
Te-131	5.87E-12	2.28E-12	1.78E-12	4.59E-12	1.59E-11	5.55E-07	3.60E-07
Te-132	1.30E-07	7.36E-08	7.12E-08	8.58E-08	4.79E-07	1.02E-04	3.72E-05
I-130	2.21E-06	4.43E-06	2.28E-06	4.99E-04	6.61E-06	0.00E+00	1.38E-06
I-131	1.30E-05	1.30E-05	7.37E-06	4.39E-03	2.13E-05	0.00E+00	7.68E-07
I-132	5.72E-07	1.10E-06	5.07E-07	5.23E-05	1.69E-06	0.00E+00	8.65E-07
I-133	4.48E-06	5.49E-06	2.08E-06	1.04E-03	9.13E-06	0.00E+00	1.48E-06
I-134	3.17E-07	5.84E-07	2.69E-07	1.37E-05	8.92E-07	0.00E+00	2.58E-07
I-135	1.33E-06	2.36E-06	1.12E-06	2.14E-04	3.62E-06	0.00E+00	1.20E-06
Cs-134	1.76E-04	2.74E-04	6.07E-05	0.00E+00	8.93E-05	3.27E-05	1.04E-06
Cs-136	1.76E-05	4.62E-05	3.14E-05	0.00E+00	2.58E-05	3.93E-06	1.13E-06
Cs-137	2.45E-04	2.23E-04	3.47E-05	0.00E+00	7.63E-05	2.81E-05	9.78E-07
Cs-138	1.71E-07	2.27E-07	1.50E-07	0.00E+00	1.68E-07	1.84E-08	7.29E-08
Ba-139	4.98E-10	2.66E-13	1.45E-11	0.00E+00	2.33E-13	1.56E-06	1.56E-05
Ba-140	2.00E-05	1.75E-08	1.17E-06	0.00E+00	5.71E-09	4.71E-04	2.75E-05
Ba-141	5.29E-11	2.95E-14	1.72E-12	0.00E+00	2.56E-14	7.89E-07	7.44E-08
Ba-142	1.35E-11	9.73E-15	7.54E-13	0.00E+00	7.87E-15	4.44E-07	7.41E-10
La-140	1.74E-07	6.08E-08	2.04E-08	0.00E+00	0.00E+00	4.94E-05	6.10E-05
La-142	3.50E-10	1.11E-10	3.49E-11	0.00E+00	0.00E+00	2.35E-06	2.05E-05
Ce-141	1.06E-05	5.28E-06	7.83E-07	0.00E+00	2.31E-06	1.47E-04	1.53E-05
Ce-143	9.89E-08	5.37E-08	7.77E-09	0.00E+00	2.26E-08	3.12E-05	3.44E-05
Ce-144	1.83E-03	5.72E-04	9.77E-05	0.00E+00	3.17E-04	3.23E-03	1.05E-04
Pr-143	4.99E-06	1.50E-06	2.47E-07	0.00E+00	8.11E-07	1.17E-04	2.63E-05
Pr-144	1.61E-11	4.99E-12	8.10E-13	0.00E+00	2.64E-12	4.23E-07	5.32E-08
Nd-147	2.92E-06	2.36E-06	1.84E-07	0.00E+00	1.30E-06	8.87E-05	2.22E-05
W-187	4.41E-09	2.61E-09	1.17E-09	0.00E+00	0.00E+00	1.11E-05	2.46E-05
Np-239	1.26E-07	9.04E-09	6.35E-09	0.00E+00	2.63E-08	1.57E-05	1.73E-05
K-40	0.00E+00	0.00E+00	0.00E+00	0.00E+00	0.00E+00	0.00E+00	0.00E+00
Co-57	0.00E+00	2.44E-07	2.88E-07	0.00E+00	0.00E+00	1.37E-04	3.58E-06
Sr-85	1.20E-05	0.00E+00	3.20E-06	0.00E+00	0.00E+00	1.50E-04	5.50E-06
Y-88	0.00E+00	0.00E+00	0.00E+00	0.00E+00	0.00E+00	0.00E+00	0.00E+00
Nb-94	0.00E+00	0.00E+00	0.00E+00	0.00E+00	0.00E+00	0.00E+00	0.00E+00
Nb-97	1.16E-10	2.08E-11	9.73E-12	0.00E+00	2.31E-11	9.24E-07	7.51E-06
Cd-109	0.00E+00	1.90E-04	8.00E-06	0.00E+00	1.70E-04	3.00E-04	8.10E-06
Sn-113	3.80E-05	8.90E-07	2.30E-06	7.10E-07	0.00E+00	3.60E-04	1.30E-06
Ba-133	1.10E-04	1.10E-06	1.00E-05	0.00E+00	5.40E-09	5.20E-04	8.30E-06
Te-134	1.53E-11	8.81E-12	9.40E-12	1.24E-11	5.71E-11	1.23E-06	4.87E-07
Ce-139	0.00E+00	0.00E+00	0.00E+00	0.00E+00	0.00E+00	0.00E+00	0.00E+00
Hg-203	0.00E+00	0.00E+00	0.00E+00	0.00E+00	0.00E+00	0.00E+00	0.00E+00

Table 3-1d

INFANT INHALATION DOSE FACTORS

(mrem per pCi inhaled)

Isotope	BONE	LIVER	TOT BODY	THYROID	KIDNEY	LUNG	GILLI
H-3	0.00E+00	4.62E-07	4.62E-07	4.62E-07	4.62E-07	4.62E-07	4.62E-07
Be-7	0.00E+00	0.00E+00	0.00E+00	0.00E+00	0.00E+00	0.00E+00	0.00E+00
Na-24	7.54E-06	7.54E-06	7.54E-06	7.54E-06	7.54E-06	7.54E-06	7.54E-06
P-32	1.45E-03	8.03E-05	5.53E-05	0.00E+00	0.00E+00	0.00E+00	1.15E-05
Cr-51	0.00E+00	0.00E+00	6.39E-08	4.11E-08	9.45E-09	9.17E-06	2.55E-07
Mn-54	0.00E+00	1.81E-05	3.56E-06	0.00E+00	3.56E-06	7.14E-04	5.04E-06
Mn-56	0.00E+00	1.10E-09	1.58E-10	0.00E+00	7.86E-10	8.95E-06	5.12E-05
Fe-55	1.41E-05	8.39E-06	2.38E-06	0.00E+00	0.00E+00	6.21E-05	7.82E-07
Fe-59	9.69E-06	1.68E-05	6.77E-06	0.00E+00	0.00E+00	7.25E-04	1.77E-05
Co-58	0.00E+00	8.71E-07	1.30E-06	0.00E+00	0.00E+00	5.55E-04	7.95E-06
Co-60	0.00E+00	5.73E-06	8.41E-06	0.00E+00	0.00E+00	3.22E-03	2.28E-05
Ni-63	2.42E-04	1.46E-05	8.29E-06	0.00E+00	0.00E+00	1.49E-04	1.73E-06
Ni-65	1.71E-09	2.03E-10	8.79E-11	0.00E+00	0.00E+00	5.80E-06	3.58E-05
Cu-64	0.00E+00	1.34E-09	5.53E-10	0.00E+00	2.84E-09	6.64E-06	1.07E-05
Zn-65	1.38E-05	4.47E-05	2.22E-05	0.00E+00	2.32E-05	4.62E-04	3.67E-05
Zn-69	3.85E-11	6.91E-11	5.13E-12	0.00E+00	2.87E-11	1.05E-06	9.44E-06
Br-83	0.00E+00	0.00E+00	2.72E-07	0.00E+00	0.00E+00	0.00E+00	0.00E+00
Br-84	0.00E+00	0.00E+00	2.86E-07	0.00E+00	0.00E+00	0.00E+00	0.00E+00
Br-85	0.00E+00	0.00E+00	1.46E-08	0.00E+00	0.00E+00	0.00E+00	0.00E+00
Rb-86	0.00E+00	1.36E-04	6.30E-05	0.00E+00	0.00E+00	0.00E+00	2.17E-06
Rb-88	0.00E+00	3.98E-07	2.05E-07	0.00E+00	0.00E+00	0.00E+00	2.42E-07
Rb-89	0.00E+00	2.29E-07	1.47E-07	0.00E+00	0.00E+00	0.00E+00	4.87E-08
Sr-89	2.84E-04	0.00E+00	8.15E-06	0.00E+00	0.00E+00	1.45E-03	4.57E-05
Sr-90	2.92E-02	0.00E+00	1.85E-03	0.00E+00	0.00E+00	8.03E-03	9.36E-05
Sr-91	6.83E-08	0.00E+00	2.47E-09	0.00E+00	0.00E+00	3.76E-05	5.24E-05
Sr-92	7.50E-09	0.00E+00	2.79E-10	0.00E+00	0.00E+00	1.70E-05	1.00E-04
Y-90	2.35E-06	0.00E+00	6.30E-08	0.00E+00	0.00E+00	1.92E-04	7.43E-05
Y-91m	2.91E-10	0.00E+00	9.90E-12	0.00E+00	0.00E+00	1.99E-06	1.68E-06
Y-91	4.20E-04	0.00E+00	1.12E-05	0.00E+00	0.00E+00	1.75E-03	5.02E-05
Y-92	1.17E-08	0.00E+00	3.29E-10	0.00E+00	0.00E+00	1.75E-05	9.04E-05
Y-93	1.07E-07	0.00E+00	2.91E-09	0.00E+00	0.00E+00	5.46E-05	1.19E-04
Zr-95	8.24E-05	1.99E-05	1.45E-05	0.00E+00	2.22E-05	1.25E-03	1.55E-05
Zr-97	1.07E-07	1.83E-08	8.36E-09	0.00E+00	1.85E-08	7.88E-05	1.00E-04
Nb-95	1.12E-05	4.59E-06	2.70E-06	0.00E+00	3.37E-06	3.42E-04	9.05E-06
Mo-99	0.00E+00	1.18E-07	2.31E-08	0.00E+00	1.89E-07	9.63E-05	3.48E-05
Tc-99m	9.98E-13	2.06E-12	2.66E-11	0.00E+00	2.22E-11	5.79E-07	1.45E-06
Tc-101	4.65E-14	5.88E-14	5.80E-13	0.00E+00	6.99E-13	4.17E-07	6.03E-07
Ru-103	1.44E-06	0.00E+00	4.85E-07	0.00E+00	3.03E-06	3.94E-04	1.15E-05
Ru-105	8.74E-10	0.00E+00	2.93E-10	0.00E+00	6.42E-10	1.12E-05	3.46E-05
Ru-106	6.20E-05	0.00E+00	7.77E-06	0.00E+00	7.61E-05	8.26E-03	1.17E-04
Ag-110m	7.13E-06	5.16E-06	3.57E-06	0.00E+00	7.80E-06	2.62E-03	2.36E-05
Sb-122	0.00E+00	0.00E+00	0.00E+00	0.00E+00	0.00E+00	0.00E+00	0.00E+00
Sb-124	2.71E-05	3.97E-07	8.56E-06	7.18E-08	0.00E+00	1.89E-03	4.22E-05
Sb-125	3.69E-05	3.41E-07	7.78E-06	4.45E-08	0.00E+00	1.17E-03	1.05E-05

Table 3-1d

INFANT INHALATION DOSE FACTORS

(mrem per pCi inhaled)

Isotope	BONE	LIVER	TOT BODY	THYROID	KIDNEY	LUNG	GILLI
Te-125m	3.40E-06	1.42E-06	4.70E-07	1.16E-06	0.00E+00	3.19E-04	9.22E-06
Te-127m	1.19E-05	4.93E-06	1.48E-06	3.48E-06	2.68E-05	9.37E-04	1.95E-05
Te-127	1.59E-05	6.81E-10	3.49E-10	1.32E-09	3.47E-09	7.39E-06	1.74E-05
Te-129m	1.01E-05	4.35E-06	1.59E-06	3.91E-06	2.27E-05	1.20E-03	4.93E-05
Te-129	5.63E-11	2.48E-11	1.34E-11	4.82E-11	1.25E-10	2.14E-06	1.88E-05
Te-131m	7.62E-08	3.93E-08	2.59E-08	6.38E-08	1.89E-07	1.42E-04	8.51E-05
Te-131	1.24E-11	5.87E-12	3.57E-12	1.13E-11	2.85E-11	1.47E-06	5.87E-06
Te-132	2.66E-07	1.69E-07	1.26E-07	1.99E-07	7.39E-07	2.43E-04	3.15E-05
I-130	4.54E-06	9.91E-06	3.98E-06	1.14E-03	1.09E-05	0.00E+00	1.42E-06
I-131	2.71E-05	3.17E-05	1.40E-05	1.06E-02	3.70E-05	0.00E+00	7.56E-07
I-132	1.21E-06	2.53E-06	8.99E-07	1.21E-04	2.82E-06	0.00E+00	1.36E-06
I-133	9.46E-06	1.37E-05	4.00E-06	2.54E-03	1.60E-05	0.00E+00	1.54E-06
I-134	6.58E-07	1.34E-06	4.75E-07	3.18E-05	1.49E-06	0.00E+00	9.21E-07
I-135	2.76E-06	5.43E-06	1.98E-06	4.97E-04	6.05E-06	0.00E+00	1.31E-06
Cs-134	2.83E-04	5.02E-04	5.32E-05	0.00E+00	1.36E-04	5.69E-05	9.53E-07
Cs-136	3.45E-05	9.61E-05	3.78E-05	0.00E+00	4.03E-05	8.40E-06	1.02E-06
Cs-137	3.92E-04	4.37E-04	3.25E-05	0.00E+00	1.23E-04	5.09E-05	9.53E-07
Cs-138	3.61E-07	5.58E-07	2.84E-07	0.00E+00	2.93E-07	4.67E-08	6.26E-07
Ba-139	1.06E-09	7.03E-13	3.07E-11	0.00E+00	4.23E-13	4.25E-06	3.64E-05
Ba-140	4.00E-05	4.00E-08	2.07E-06	0.00E+00	9.59E-09	1.14E-03	2.74E-05
Ba-141	1.12E-10	7.70E-14	3.55E-12	0.00E+00	4.64E-14	2.12E-06	3.39E-06
Ba-142	2.84E-11	2.36E-14	1.40E-12	0.00E+00	1.36E-14	1.11E-06	4.95E-07
La-140	3.61E-07	1.43E-07	3.68E-08	0.00E+00	0.00E+00	1.20E-04	6.06E-05
La-142	7.36E-10	2.69E-10	6.46E-11	0.00E+00	0.00E+00	5.87E-06	4.25E-05
Ce-141	1.98E-05	1.19E-05	1.42E-06	0.00E+00	3.75E-06	3.69E-04	1.54E-05
Ce-143	2.09E-07	1.38E-07	1.58E-08	0.00E+00	4.03E-08	8.30E-05	3.55E-05
Ce-144	2.28E-03	8.65E-04	1.26E-04	0.00E+00	3.84E-04	7.03E-03	1.06E-04
Pr-143	1.00E-05	3.74E-06	4.99E-07	0.00E+00	1.41E-06	3.09E-04	2.66E-05
Pr-144	3.42E-11	1.32E-11	1.72E-12	0.00E+00	4.80E-12	1.15E-06	3.06E-06
Nd-147	5.67E-06	5.81E-06	3.57E-07	0.00E+00	2.25E-06	2.30E-04	2.23E-05
W-187	9.26E-09	6.44E-09	2.23E-09	0.00E+00	0.00E+00	2.83E-05	2.54E-05
Np-239	2.65E-07	2.37E-08	1.34E-08	0.00E+00	4.73E-08	4.25E-05	1.78E-05
K-40	0.00E+00	0.00E+00	0.00E+00	0.00E+00	0.00E+00	0.00E+00	0.00E+00
Co-57	0.00E+00	4.65E-07	4.58E-07	0.00E+00	0.00E+00	2.71E-04	3.47E-06
Sr-85	2.70E-05	0.00E+00	5.40E-06	0.00E+00	0.00E+00	3.00E-04	4.80E-06
Y-88	0.00E+00	0.00E+00	0.00E+00	0.00E+00	0.00E+00	0.00E+00	0.00E+00
Nb-94	0.00E+00	0.00E+00	0.00E+00	0.00E+00	0.00E+00	0.00E+00	0.00E+00
Nb-97	2.44E-10	5.21E-11	1.88E-11	0.00E+00	4.07E-11	2.37E-06	1.92E-05
Cd-109	0.00E+00	2.60E-04	1.00E-05	0.00E+00	2.00E-04	6.20E-04	8.00E-06
Sn-113	6.00E-05	1.60E-06	3.60E-06	1.30E-06	0.00E+00	7.80E-04	1.20E-06
Ba-133	1.90E-04	1.70E-06	1.30E-05	0.00E+00	8.90E-09	9.10E-04	7.70E-06
Te-134	3.18E-11	2.04E-11	1.68E-11	2.91E-11	9.59E-11	2.93E-06	2.53E-06
Ce-139	0.00E+00	0.00E+00	0.00E+00	0.00E+00	0.00E+00	0.00E+00	0.00E+00
Hg-203	0.00E+00	0.00E+00	0.00E+00	0.00E+00	0.00E+00	0.00E+00	0.00E+00

Table 3-2

Total Body & Skin Ground Plane Dose Factors (mrem/hr per pCi/m^2)
with Isotope half-life and Stable Element Tranfer Data (Fm, cow)

				Ground Plane Dose Factors	
Isotope	Halflife	unit	Fm	TotBody(DFg)	Skin(DFs)
H-3	12.350	Y	1.00E-02	0.00E+00	0.00E+00
Be-7	53.300	D	1.00E-04	0.00E+00	0.00E+00
Na-24	15.000	H	4.00E-02	2.50E-08	2.90E-08
P-32	14.290	D	2.50E-02	0.00E+00	0.00E+00
Cr-51	27.704	D	2.20E-03	2.20E-10	2.60E-10
Mn-54	312.500	D	2.50E-04	5.80E-09	6.80E-09
Mn-56	2.578	H	2.50E-04	1.10E-08	1.30E-08
Fe-55	2.700	Y	1.20E-03	0.00E+00	0.00E+00
Fe-59	44.529	D	1.20E-03	8.00E-09	9.40E-09
Co-58	70.800	D	1.00E-03	7.00E-09	8.20E-09
Co-60	5.271	Y	1.00E-03	1.70E-08	2.00E-08
Ni-63	96.000	Y	6.70E-03	0.00E+00	0.00E+00
Ni-65	2.520	H	6.70E-03	3.70E-09	4.30E-09
Cu-64	12.701	H	1.40E-02	1.50E-09	1.70E-09
Zn-65	243.900	D	3.90E-02	4.00E-09	4.60E-09
Zn-69	0.950	H	3.90E-02	0.00E+00	0.00E+00
Br-83	2.390	H	5.00E-02	6.40E-11	9.30E-11
Br-84	0.530	H	5.00E-02	1.20E-08	1.40E-08
Br-85	0.050	H	5.00E-02	0.00E+00	0.00E+00
Rb-86	18.660	D	3.00E-02	6.30E-10	7.20E-10
Rb-88	0.297	H	3.00E-02	3.50E-09	4.00E-09
Rb-89	0.253	H	3.00E-02	1.50E-08	1.80E-08
Sr-89	50.500	D	8.00E-04	5.60E-13	6.50E-13
Sr-90	29.120	Y	8.00E-04	0.00E+00	0.00E+00
Sr-91	9.500	H	8.00E-04	7.10E-09	8.30E-09
Sr-92	2.710	H	8.00E-04	9.00E-09	1.00E-08
Y-90	2.667	D	1.00E-05	2.20E-12	2.60E-12
Y-91m	0.829	H	1.00E-05	3.80E-09	4.40E-09
Y-91	58.510	D	1.00E-05	2.40E-11	2.70E-11
Y-92	3.540	H	1.00E-05	1.60E-09	1.90E-09
Y-93	10.100	H	1.00E-05	5.70E-10	7.80E-10
Zr-95	63.980	D	5.00E-06	5.00E-09	5.80E-09
Zr-97	16.900	H	5.00E-06	5.50E-09	6.40E-09
Nb-95	35.150	D	2.50E-03	5.10E-09	6.00E-09
Mo-99	2.750	D	7.50E-03	1.90E-09	2.20E-09
Tc-99m	6.020	H	2.50E-02	9.60E-10	1.10E-09
Tc-101	0.237	H	2.50E-02	2.70E-09	3.00E-09
Ru-103	39.280	D	1.00E-06	3.60E-09	4.20E-09
Ru-105	4.440	H	1.00E-06	4.50E-09	5.10E-09
Ru-106	368.200	D	1.00E-06	1.50E-09	1.80E-09
Ag-110m	249.900	D	5.00E-02	1.80E-08	2.10E-08
Sb-122	2.700	D	1.50E-03	0.00E+00	0.00E+00
Sb-124	60.200	D	1.50E-03	1.30E-08	1.50E-08
Sb-125	2.770	Y	1.50E-03	3.10E-09	3.50E-09

Table 3-2

Total Body & Skin Ground Plane Dose Factors (mrem/hr per pCi/m^2)
with Isotope half-life and Stable Element Tranfer Data (Fm, cow)

				Ground Plane Dose Factors	
Isotope	Halflife	unit	Fm	TotBody(DFg)	Skin(DFs)
Te-125m	58.000	D	1.00E-03	3.50E-11	4.80E-11
Te-127m	109.000	D	1.00E-03	1.10E-12	1.30E-12
Te-127	9.350	H	1.00E-03	1.00E-11	1.10E-11
Te-129m	33.600	D	1.00E-03	7.70E-10	9.00E-10
Te-129	1.160	H	1.00E-03	7.10E-10	8.40E-10
Te-131m	30.000	H	1.00E-03	8.40E-09	9.90E-09
Te-131	0.417	H	1.00E-03	2.20E-09	2.60E-06
Te-132	3.258	D	1.00E-03	1.70E-09	2.00E-09
I-130	12.360	H	6.00E-03	1.40E-08	1.70E-08
I-131	8.040	D	6.00E-03	2.80E-09	3.40E-09
I-132	2.300	H	6.00E-03	1.70E-08	2.00E-08
I-133	20.800	H	6.00E-03	3.70E-09	4.50E-09
I-134	0.877	H	6.00E-03	1.60E-08	1.90E-08
I-135	6.610	H	6.00E-03	1.20E-08	1.40E-08
Cs-134	2.062	Y	1.20E-02	1.20E-08	1.40E-08
Cs-136	13.100	D	1.20E-02	1.50E-08	1.70E-08
Cs-137	30.000	Y	1.20E-02	4.20E-09	4.90E-09
Cs-138	0.537	H	1.20E-02	2.10E-08	2.40E-08
Ba-139	1.378	H	4.00E-04	2.40E-09	2.70E-09
Ba-140	12.740	D	4.00E-04	2.10E-09	2.40E-09
Ba-141	0.304	H	4.00E-04	4.30E-09	4.90E-09
Ba-142	0.177	H	4.00E-04	7.90E-09	9.00E-09
La-140	1.678	D	5.00E-06	1.50E-08	1.70E-08
La-142	1.542	H	5.00E-06	1.50E-08	1.80E-08
Ce-141	32.501	D	1.00E-04	5.50E-10	6.20E-10
Ce-143	33.000	H	1.00E-04	2.20E-09	2.50E-09
Ce-144	284.300	D	1.00E-04	3.20E-10	3.70E-10
Pr-143	13.560	D	5.00E-06	0.00E+00	0.00E+00
Pr-144	0.288	H	5.00E-06	2.00E-10	2.30E-10
Nd-147	10.980	D	5.00E-06	1.00E-09	1.20E-09
W-187	23.900	H	5.00E-04	3.10E-09	3.60E-09
Np-239	2.360	D	5.00E-06	9.50E-10	1.10E-09
K-40	1.28E+09	Y	1.00E-02	0.00E+00	0.00E+00
Co-57	270.900	D	1.00E-03	9.10E-10	1.00E-09
Sr-85	64.840	D	8.00E-04	0.00E+00	0.00E+00
Y-88	106.640	D	1.00E-05	0.00E+00	0.00E+00
Nb-94	2.03E+04	Y	2.50E-03	0.00E+00	0.00E+00
Nb-97	1.202	H	2.50E-03	4.60E-09	5.40E-09
Cd-109	1.271	Y	1.20E-04	0.00E+00	0.00E+00
Sn-113	115.100	D	2.50E-03	0.00E+00	0.00E+00
Ba-133	10.740	Y	4.00E-04	0.00E+00	0.00E+00
Te-134	0.697	H	1.00E-03	1.00E-09	1.20E-09
Ce-139	137.660	D	1.00E-04	0.00E+00	0.00E+00
Hg-203	46.600	D	3.80E-02	0.00E+00	0.00E+00

Table 3-3a

ADULT INGESTION DOSE FACTORS

(mrem per pCi ingested)

Isotope	BONE	LIVER	TOT BODY	THYROID	KIDNEY	LUNG	GILLI
H-3	0.00E+00	1.05E-07	1.05E-07	1.05E-07	1.05E-07	1.05E-07	1.05E-07
Be-7	2.77E-09	6.26E-09	3.10E-09	0.00E+00	6.58E-09	0.00E+00	1.08E-06
Na-24	1.70E-06	1.70E-06	1.70E-06	1.70E-06	1.70E-06	1.70E-06	1.70E-06
P-32	1.93E-04	1.20E-05	7.46E-06	0.00E+00	0.00E+00	0.00E+00	2.17E-05
Cr-51	0.00E+00	0.00E+00	2.66E-09	1.59E-09	5.86E-10	3.53E-09	6.69E-07
Mn-54	0.00E+00	4.57E-06	8.72E-07	0.00E+00	1.36E-06	0.00E+00	1.40E-05
Mn-56	0.00E+00	1.15E-07	2.04E-08	0.00E+00	1.46E-07	0.00E+00	3.67E-06
Fe-55	2.75E-06	1.90E-06	4.43E-07	0.00E+00	0.00E+00	1.06E-06	1.09E-06
Fe-59	4.34E-06	1.02E-05	3.91E-06	0.00E+00	0.00E+00	2.85E-06	3.40E-05
Co-58	0.00E+00	7.45E-07	1.67E-06	0.00E+00	0.00E+00	0.00E+00	1.51E-05
Co-60	0.00E+00	2.14E-06	4.72E-06	0.00E+00	0.00E+00	0.00E+00	4.02E-05
Ni-63	1.30E-04	9.01E-06	4.36E-06	0.00E+00	0.00E+00	0.00E+00	1.88E-06
Ni-65	5.28E-07	6.86E-08	3.13E-08	0.00E+00	0.00E+00	0.00E+00	1.74E-06
Cu-64	0.00E+00	8.33E-08	3.91E-08	0.00E+00	2.10E-07	0.00E+00	7.10E-06
Zn-65	4.84E-06	1.54E-05	6.96E-06	0.00E+00	1.03E-05	0.00E+00	9.70E-06
Zn-69	1.03E-08	1.97E-08	1.37E-09	0.00E+00	1.28E-08	0.00E+00	2.96E-09
Br-83	0.00E+00	0.00E+00	4.02E-08	0.00E+00	0.00E+00	0.00E+00	5.79E-08
Br-84	0.00E+00	0.00E+00	5.21E-08	0.00E+00	0.00E+00	0.00E+00	4.09E-13
Br-85	0.00E+00	0.00E+00	2.14E-09	0.00E+00	0.00E+00	0.00E+00	0.00E+00
Rb-86	0.00E+00	2.11E-05	9.83E-06	0.00E+00	0.00E+00	0.00E+00	4.16E-06
Rb-88	0.00E+00	6.05E-08	3.21E-08	0.00E+00	0.00E+00	0.00E+00	8.36E-19
Rb-89	0.00E+00	4.01E-08	2.82E-08	0.00E+00	0.00E+00	0.00E+00	2.33E-21
Sr-89	3.08E-04	0.00E+00	8.84E-06	0.00E+00	0.00E+00	0.00E+00	4.94E-05
Sr-90	7.58E-03	0.00E+00	1.86E-03	0.00E+00	0.00E+00	0.00E+00	2.19E-04
Sr-91	5.67E-06	0.00E+00	2.29E-07	0.00E+00	0.00E+00	0.00E+00	2.70E-05
Sr-92	2.15E-06	0.00E+00	9.30E-08	0.00E+00	0.00E+00	0.00E+00	4.26E-05
Y-90	9.62E-09	0.00E+00	2.58E-10	0.00E+00	0.00E+00	0.00E+00	1.02E-04
Y-91m	9.09E-11	0.00E+00	3.52E-12	0.00E+00	0.00E+00	0.00E+00	2.67E-10
Y-91	1.41E-07	0.00E+00	3.77E-09	0.00E+00	0.00E+00	0.00E+00	7.76E-05
Y-92	8.45E-10	0.00E+00	2.47E-11	0.00E+00	0.00E+00	0.00E+00	1.48E-05
Y-93	2.68E-09	0.00E+00	7.40E-11	0.00E+00	0.00E+00	0.00E+00	8.50E-05
Zr-95	3.04E-08	9.75E-09	6.60E-09	0.00E+00	1.53E-08	0.00E+00	3.09E-05
Zr-97	1.68E-09	3.39E-10	1.55E-10	0.00E+00	5.12E-10	0.00E+00	1.05E-04
Nb-95	6.22E-09	3.46E-09	1.86E-09	0.00E+00	3.42E-09	0.00E+00	2.10E-05
Mo-99	0.00E+00	4.31E-06	8.20E-07	0.00E+00	9.76E-06	0.00E+00	9.99E-06
Tc-99m	2.47E-10	6.98E-10	8.89E-09	0.00E+00	1.06E-08	3.42E-10	4.13E-07
Tc-101	2.54E-10	3.66E-10	3.59E-09	0.00E+00	6.59E-09	1.87E-10	1.10E-21
Ru-103	1.85E-07	0.00E+00	7.97E-08	0.00E+00	7.06E-07	0.00E+00	2.16E-05
Ru-105	1.54E-08	0.00E+00	6.08E-09	0.00E+00	1.99E-07	0.00E+00	9.42E-06
Ru-106	2.75E-06	0.00E+00	3.48E-07	0.00E+00	5.31E-06	0.00E+00	1.78E-04
Ag-110m	1.60E-07	1.48E-07	8.79E-08	0.00E+00	2.91E-07	0.00E+00	6.04E-05
Sb-122	2.00E-07	4.60E-09	6.90E-08	3.10E-09	0.00E+00	1.20E-07	7.60E-05
Sb-124	2.80E-06	5.30E-08	1.10E-06	6.80E-09	0.00E+00	2.18E-06	7.95E-05
Sb-125	1.79E-06	2.00E-08	4.26E-07	1.82E-09	0.00E+00	1.38E-06	1.97E-05

Table 3-3a

ADULT INGESTION DOSE FACTORS

(mrem per pCi ingested)

Isotope	BONE	LIVER	TOT BODY	THYROID	KIDNEY	LUNG	GILLI
Te-125m	2.68E-06	9.71E-07	3.59E-07	8.06E-07	1.09E-05	0.00E+00	1.07E-05
Te-127m	6.77E-06	2.42E-06	8.25E-07	1.73E-06	2.75E-05	0.00E+00	2.27E-05
Te-127	1.10E-07	3.95E-08	2.38E-08	8.15E-08	4.48E-07	0.00E+00	8.68E-06
Te-129m	1.15E-05	4.29E-06	1.82E-06	3.95E-06	4.80E-05	0.00E+00	5.79E-05
Te-129	3.14E-08	1.18E-08	7.65E-09	2.41E-08	1.32E-07	0.00E+00	2.37E-08
Te-131m	1.73E-06	8.46E-07	7.05E-07	1.34E-06	8.57E-06	0.00E+00	8.40E-05
Te-131	1.97E-08	8.23E-09	6.22E-09	1.62E-08	8.63E-08	0.00E+00	2.79E-09
Te-132	2.52E-06	1.63E-06	1.53E-06	1.80E-06	1.57E-05	0.00E+00	7.71E-05
I-130	7.56E-07	2.23E-06	8.80E-07	1.89E-04	3.48E-06	0.00E+00	1.92E-06
I-131	4.16E-06	5.95E-06	3.41E-06	1.95E-03	1.02E-05	0.00E+00	1.57E-06
I-132	2.03E-07	5.43E-07	1.90E-07	1.90E-05	8.65E-07	0.00E+00	1.02E-07
I-133	1.42E-06	2.47E-06	7.53E-07	3.63E-04	4.31E-06	0.00E+00	2.22E-06
I-134	1.06E-07	2.88E-07	1.03E-07	4.99E-06	4.58E-07	0.00E+00	2.51E-10
I-135	4.43E-07	1.16E-06	4.28E-07	7.65E-05	1.86E-06	0.00E+00	1.31E-06
Cs-134	6.22E-05	1.48E-04	1.21E-04	0.00E+00	4.79E-05	1.59E-05	2.59E-06
Cs-136	6.51E-06	2.57E-05	1.85E-05	0.00E+00	1.43E-05	1.96E-06	2.92E-06
Cs-137	7.97E-05	1.09E-04	7.14E-05	0.00E+00	3.70E-05	1.23E-05	2.11E-06
Cs-138	5.52E-08	1.09E-07	5.40E-08	0.00E+00	8.01E-08	7.91E-09	4.65E-13
Ba-139	9.70E-08	6.91E-11	2.84E-09	0.00E+00	6.46E-11	3.92E-11	1.72E-07
Ba-140	2.03E-05	2.55E-08	1.33E-06	0.00E+00	8.67E-09	1.46E-08	4.18E-05
Ba-141	4.71E-08	3.56E-11	1.59E-09	0.00E+00	3.31E-11	2.02E-11	2.22E-17
Ba-142	2.13E-08	2.19E-11	1.34E-09	0.00E+00	1.85E-11	1.24E-11	3.00E-26
La-140	2.50E-09	1.26E-09	3.33E-10	0.00E+00	0.00E+00	0.00E+00	9.25E-05
La-142	1.28E-10	5.82E-11	1.45E-11	0.00E+00	0.00E+00	0.00E+00	4.25E-07
Ce-141	9.36E-09	6.33E-09	7.18E-10	0.00E+00	2.94E-09	0.00E+00	2.42E-05
Ce-143	1.65E-09	1.22E-06	1.35E-10	0.00E+00	5.37E-10	0.00E+00	4.56E-05
Ce-144	4.88E-07	2.04E-07	2.62E-08	0.00E+00	1.21E-07	0.00E+00	1.65E-04
Pr-143	9.20E-09	3.69E-09	4.56E-10	0.00E+00	2.13E-09	0.00E+00	4.03E-05
Pr-144	3.01E-11	1.25E-11	1.53E-12	0.00E+00	7.05E-12	0.00E+00	4.33E-18
Nd-147	6.29E-09	7.27E-09	4.35E-10	0.00E+00	4.25E-09	0.00E+00	3.49E-05
W-187	1.03E-07	8.61E-08	3.01E-08	0.00E+00	0.00E+00	0.00E+00	2.82E-05
Np-239	1.19E-09	1.17E-10	6.45E-11	0.00E+00	3.65E-10	0.00E+00	2.40E-05
K-40	0.00E+00	0.00E+00	0.00E+00	0.00E+00	0.00E+00	0.00E+00	0.00E+00
Co-57	0.00E+00	1.75E-07	2.91E-07	0.00E+00	0.00E+00	0.00E+00	4.44E-06
Sr-85	0.00E+00	0.00E+00	0.00E+00	0.00E+00	0.00E+00	0.00E+00	0.00E+00
Y-88	0.00E+00	0.00E+00	0.00E+00	0.00E+00	0.00E+00	0.00E+00	0.00E+00
Nb-94	0.00E+00	0.00E+00	0.00E+00	0.00E+00	0.00E+00	0.00E+00	0.00E+00
Nb-97	5.22E-11	1.32E-11	4.82E-12	0.00E+00	1.54E-11	0.00E+00	4.87E-08
Cd-109	0.00E+00	0.00E+00	0.00E+00	0.00E+00	0.00E+00	0.00E+00	0.00E+00
Sn-113	0.00E+00	0.00E+00	0.00E+00	0.00E+00	0.00E+00	0.00E+00	0.00E+00
Ba-133	0.00E+00	0.00E+00	0.00E+00	0.00E+00	0.00E+00	0.00E+00	0.00E+00
Te-134	3.24E-08	2.12E-08	1.30E-08	2.83E-08	2.05E-07	0.00E+00	3.59E-11
Ce-139	0.00E+00	0.00E+00	0.00E+00	0.00E+00	0.00E+00	0.00E+00	0.00E+00
Hg-203	0.00E+00	0.00E+00	0.00E+00	0.00E+00	0.00E+00	0.00E+00	0.00E+00

Table 3-3b

TEEN INGESTION DOSE FACTORS

(mrem per pCi ingested)

Isotope	BONE	LIVER	TOT BODY	THYROID	KIDNEY	LUNG	GILLI
H-3	0.00E+00	1.06E-07	1.06E-07	1.06E-07	1.06E-07	1.06E-07	1.06E-07
Be-7	3.96E-09	8.87E-09	4.43E-09	0.00E+00	9.40E-09	0.00E+00	1.08E-06
Na-24	2.30E-06	2.30E-06	2.30E-06	2.30E-06	2.30E-06	2.30E-06	2.30E-06
P-32	2.76E-04	1.71E-05	1.07E-05	0.00E+00	0.00E+00	0.00E+00	2.32E-05
Cr-51	0.00E+00	0.00E+00	3.60E-09	2.00E-09	7.89E-10	5.14E-09	6.05E-07
Mn-54	0.00E+00	5.90E-06	1.17E-06	0.00E+00	1.76E-06	0.00E+00	1.21E-05
Mn-56	0.00E+00	1.58E-07	2.81E-08	0.00E+00	2.00E-07	0.00E+00	1.04E-05
Fe-55	3.78E-06	2.68E-06	6.25E-07	0.00E+00	0.00E+00	1.70E-06	1.16E-06
Fe-59	5.87E-06	1.37E-05	5.29E-06	0.00E+00	0.00E+00	4.32E-06	3.24E-05
Co-58	0.00E+00	9.72E-07	2.24E-06	0.00E+00	0.00E+00	0.00E+00	1.34E-05
Co-60	0.00E+00	2.81E-06	6.33E-06	0.00E+00	0.00E+00	0.00E+00	3.66E-05
Ni-63	1.77E-04	1.25E-05	6.00E-06	0.00E+00	0.00E+00	0.00E+00	1.99E-06
Ni-65	7.49E-07	9.57E-08	4.36E-08	0.00E+00	0.00E+00	0.00E+00	5.19E-06
Cu-64	0.00E+00	1.15E-07	5.41E-08	0.00E+00	2.91E-07	0.00E+00	8.92E-06
Zn-65	5.76E-06	2.00E-05	9.33E-06	0.00E+00	1.28E-05	0.00E+00	8.47E-06
Zn-69	1.47E-08	2.80E-08	1.96E-09	0.00E+00	1.83E-08	0.00E+00	5.16E-08
Br-83	0.00E+00	0.00E+00	5.74E-08	0.00E+00	0.00E+00	0.00E+00	0.00E+00
Br-84	0.00E+00	0.00E+00	7.22E-08	0.00E+00	0.00E+00	0.00E+00	0.00E+00
Br-85	0.00E+00	0.00E+00	3.05E-09	0.00E+00	0.00E+00	0.00E+00	0.00E+00
Rb-86	0.00E+00	2.98E-05	1.40E-05	0.00E+00	0.00E+00	0.00E+00	4.41E-06
Rb-88	0.00E+00	8.52E-08	4.54E-08	0.00E+00	0.00E+00	0.00E+00	7.30E-15
Rb-89	0.00E+00	5.50E-08	3.89E-08	0.00E+00	0.00E+00	0.00E+00	8.43E-17
Sr-89	4.40E-04	0.00E+00	1.26E-05	0.00E+00	0.00E+00	0.00E+00	5.24E-05
Sr-90	8.30E-03	0.00E+00	2.05E-03	0.00E+00	0.00E+00	0.00E+00	2.33E-04
Sr-91	8.07E-06	0.00E+00	3.21E-07	0.00E+00	0.00E+00	0.00E+00	3.66E-05
Sr-92	3.05E-06	0.00E+00	1.30E-07	0.00E+00	0.00E+00	0.00E+00	7.77E-05
Y-90	1.37E-08	0.00E+00	3.69E-10	0.00E+00	0.00E+00	0.00E+00	1.13E-04
Y-91m	1.29E-10	0.00E+00	4.93E-12	0.00E+00	0.00E+00	0.00E+00	6.09E-09
Y-91	2.01E-07	0.00E+00	5.39E-09	0.00E+00	0.00E+00	0.00E+00	8.24E-05
Y-92	1.21E-09	0.00E+00	3.50E-11	0.00E+00	0.00E+00	0.00E+00	3.32E-05
Y-93	3.83E-09	0.00E+00	1.05E-10	0.00E+00	0.00E+00	0.00E+00	1.17E-04
Zr-95	4.12E-08	1.30E-08	8.94E-09	0.00E+00	1.91E-08	0.00E+00	3.00E-05
Zr-97	2.37E-09	4.69E-10	2.16E-10	0.00E+00	7.11E-10	0.00E+00	1.27E-04
Nb-95	8.22E-09	4.56E-09	2.51E-09	0.00E+00	4.42E-09	0.00E+00	1.95E-05
Mo-99	0.00E+00	6.03E-06	1.15E-06	0.00E+00	1.38E-05	0.00E+00	1.08E-05
Tc-99m	3.32E-10	9.26E-10	1.20E-08	0.00E+00	1.38E-08	5.14E-10	6.08E-07
Tc-101	3.60E-10	5.12E-10	5.03E-09	0.00E+00	9.26E-09	3.12E-10	8.75E-17
Ru-103	2.55E-07	0.00E+00	1.09E-07	0.00E+00	8.99E-07	0.00E+00	2.13E-05
Ru-105	2.18E-08	0.00E+00	8.46E-09	0.00E+00	2.75E-07	0.00E+00	1.76E-05
Ru-106	3.92E-06	0.00E+00	4.94E-07	0.00E+00	7.56E-06	0.00E+00	1.88E-04
Ag-110m	2.05E-07	1.94E-07	1.18E-07	0.00E+00	3.70E-07	0.00E+00	5.45E-05
Sb-122	3.30E-07	6.42E-09	9.64E-08	4.19E-09	0.00E+00	2.06E-07	6.92E-05
Sb-124	3.86E-06	7.12E-08	1.51E-06	8.79E-09	0.00E+00	3.37E-06	7.81E-05
Sb-125	2.48E-06	2.71E-08	5.79E-07	2.36E-09	0.00E+00	2.16E-06	1.92E-05

Table 3-3b

TEEN INGESTION DOSE FACTORS

(mrem per pCi ingested)

Isotope	BONE	LIVER	TOT BODY	THYROID	KIDNEY	LUNG	GILLI
Te-125m	3.83E-06	1.38E-06	5.12E-07	1.07E-06	0.00E+00	0.00E+00	1.13E-05
Te-127m	9.67E-06	3.43E-06	1.15E-06	2.30E-06	3.92E-05	0.00E+00	2.41E-05
Te-127	1.58E-07	5.60E-08	3.40E-08	1.09E-07	6.40E-07	0.00E+00	1.22E-05
Te-129m	1.63E-05	6.05E-06	2.58E-06	5.26E-06	6.82E-05	0.00E+00	6.12E-05
Te-129	4.48E-08	1.67E-08	1.09E-08	3.20E-08	1.88E-07	0.00E+00	2.45E-07
Te-131m	2.44E-06	1.17E-06	9.76E-07	1.76E-06	1.22E-05	0.00E+00	9.39E-05
Te-131	2.79E-08	1.15E-08	8.72E-09	2.15E-08	1.22E-07	0.00E+00	2.29E-09
Te-132	3.49E-06	2.21E-06	2.08E-06	2.33E-06	2.12E-05	0.00E+00	7.00E-05
I-130	1.03E-06	2.98E-06	1.19E-06	2.43E-04	4.59E-06	0.00E+00	2.29E-06
I-131	5.85E-06	8.19E-06	4.40E-06	2.39E-03	1.41E-05	0.00E+00	1.62E-06
I-132	2.79E-07	7.30E-07	2.62E-07	2.46E-05	1.15E-06	0.00E+00	3.18E-07
I-133	2.01E-06	3.41E-06	1.04E-06	4.76E-04	5.98E-06	0.00E+00	2.58E-06
I-134	1.46E-07	3.87E-07	1.39E-07	6.45E-06	6.10E-07	0.00E+00	5.10E-09
I-135	6.10E-07	1.57E-06	5.82E-07	1.01E-04	2.48E-06	0.00E+00	1.74E-06
Cs-134	8.37E-05	1.97E-04	9.14E-05	0.00E+00	6.26E-05	2.39E-05	2.45E-06
Cs-136	8.59E-06	3.38E-05	2.27E-05	0.00E+00	1.84E-05	2.90E-06	2.72E-06
Cs-137	1.12E-04	1.49E-04	5.19E-05	0.00E+00	5.07E-05	1.97E-05	2.12E-06
Cs-138	7.76E-08	1.49E-07	7.45E-08	0.00E+00	1.10E-07	1.28E-08	6.76E-11
Ba-139	1.39E-07	9.78E-11	4.05E-09	0.00E+00	9.22E-11	6.74E-11	1.24E-06
Ba-140	2.84E-05	3.48E-08	1.83E-06	0.00E+00	1.18E-08	2.34E-08	4.38E-05
Ba-141	6.71E-08	5.01E-11	2.24E-09	0.00E+00	4.65E-11	3.43E-11	1.43E-13
Ba-142	2.99E-08	2.99E-11	1.84E-09	0.00E+00	2.53E-11	1.99E-11	9.18E-20
La-140	3.48E-09	1.71E-09	4.55E-10	0.00E+00	0.00E+00	0.00E+00	9.82E-05
La-142	1.79E-10	7.95E-11	1.98E-11	0.00E+00	0.00E+00	0.00E+00	2.42E-06
Ce-141	1.33E-08	8.88E-09	1.02E-09	0.00E+00	4.18E-09	0.00E+00	2.54E-05
Ce-143	2.35E-09	1.71E-06	1.91E-10	0.00E+00	7.67E-10	0.00E+00	5.14E-05
Ce-144	6.96E-07	2.88E-07	3.74E-08	0.00E+00	1.72E-07	0.00E+00	1.75E-04
Pr-143	1.31E-08	5.23E-09	6.52E-10	0.00E+00	3.04E-09	0.00E+00	4.31E-05
Pr-144	4.30E-11	1.76E-11	2.18E-12	0.00E+00	1.01E-11	0.00E+00	4.74E-14
Nd-147	9.38E-09	1.02E-08	6.11E-10	0.00E+00	5.99E-09	0.00E+00	3.68E-05
W-187	1.46E-07	1.19E-07	4.17E-08	0.00E+00	0.00E+00	0.00E+00	3.22E-05
Np-239	1.76E-09	1.66E-10	9.22E-11	0.00E+00	5.21E-10	0.00E+00	2.67E-05
K-40	0.00E+00	0.00E+00	0.00E+00	0.00E+00	0.00E+00	0.00E+00	0.00E+00
Co-57	0.00E+00	2.38E-07	3.99E-07	0.00E+00	0.00E+00	0.00E+00	4.44E-06
Sr-85	0.00E+00	0.00E+00	0.00E+00	0.00E+00	0.00E+00	0.00E+00	0.00E+00
Y-88	0.00E+00	0.00E+00	0.00E+00	0.00E+00	0.00E+00	0.00E+00	0.00E+00
Nb-94	0.00E+00	0.00E+00	0.00E+00	0.00E+00	0.00E+00	0.00E+00	0.00E+00
Nb-97	7.37E-11	1.83E-11	6.68E-12	0.00E+00	2.14E-11	0.00E+00	4.37E-07
Cd-109	0.00E+00	0.00E+00	0.00E+00	0.00E+00	0.00E+00	0.00E+00	0.00E+00
Sn-113	0.00E+00	0.00E+00	0.00E+00	0.00E+00	0.00E+00	0.00E+00	0.00E+00
Ba-133	0.00E+00	0.00E+00	0.00E+00	0.00E+00	0.00E+00	0.00E+00	0.00E+00
Te-134	4.47E-08	2.87E-08	3.00E-08	3.67E-08	2.74E-07	0.00E+00	1.66E-09
Ce-139	0.00E+00	0.00E+00	0.00E+00	0.00E+00	0.00E+00	0.00E+00	0.00E+00
Hg-203	0.00E+00	0.00E+00	0.00E+00	0.00E+00	0.00E+00	0.00E+00	0.00E+00

Table 3-3c

CHILD INGESTION DOSE FACTORS

(mrem per pCi ingested)

Isotope	BONE	LIVER	TOT BODY	THYROID	KIDNEY	LUNG	GILLI
H-3	0.00E+00	2.03E-07	2.03E-07	2.03E-07	2.03E-07	2.03E-07	2.03E-07
Be-7	1.18E-08	2.00E-08	1.32E-08	0.00E+00	1.97E-08	0.00E+00	1.12E-06
Na-24	5.80E-06	5.80E-06	5.80E-06	5.80E-06	5.80E-06	5.80E-06	5.80E-06
P-32	8.25E-04	3.86E-05	3.18E-05	0.00E+00	0.00E+00	0.00E+00	2.28E-05
Cr-51	0.00E+00	0.00E+00	8.90E-09	4.94E-09	1.35E-09	9.02E-09	4.72E-07
Mn-54	0.00E+00	1.07E-05	2.85E-06	0.00E+00	3.00E-06	0.00E+00	8.98E-06
Mn-56	0.00E+00	3.34E-07	7.54E-08	0.00E+00	4.04E-07	0.00E+00	4.84E-05
Fe-55	1.15E-05	6.10E-06	1.89E-06	0.00E+00	0.00E+00	3.45E-06	1.13E-06
Fe-59	1.65E-05	2.67E-05	1.33E-05	0.00E+00	0.00E+00	7.74E-06	2.78E-05
Co-58	0.00E+00	1.80E-06	5.51E-06	0.00E+00	0.00E+00	0.00E+00	1.05E-05
Co-60	0.00E+00	5.29E-06	1.56E-05	0.00E+00	0.00E+00	0.00E+00	2.93E-05
Ni-63	5.38E-04	2.88E-05	1.83E-05	0.00E+00	0.00E+00	0.00E+00	1.94E-06
Ni-65	2.22E-06	2.09E-07	1.22E-07	0.00E+00	0.00E+00	0.00E+00	2.56E-05
Cu-64	0.00E+00	2.45E-07	1.48E-07	0.00E+00	5.92E-07	0.00E+00	1.15E-05
Zn-65	1.37E-05	3.65E-05	2.27E-05	0.00E+00	2.30E-05	0.00E+00	6.41E-06
Zn-69	4.38E-08	6.33E-08	5.85E-09	0.00E+00	3.84E-08	0.00E+00	3.99E-06
Br-83	0.00E+00	0.00E+00	1.71E-07	0.00E+00	0.00E+00	0.00E+00	0.00E+00
Br-84	0.00E+00	0.00E+00	1.98E-07	0.00E+00	0.00E+00	0.00E+00	0.00E+00
Br-85	0.00E+00	0.00E+00	9.12E-09	0.00E+00	0.00E+00	0.00E+00	0.00E+00
Rb-86	0.00E+00	6.70E-05	4.12E-05	0.00E+00	0.00E+00	0.00E+00	4.31E-06
Rb-88	0.00E+00	1.90E-07	1.32E-07	0.00E+00	0.00E+00	0.00E+00	9.32E-09
Rb-89	0.00E+00	1.17E-07	1.04E-07	0.00E+00	0.00E+00	0.00E+00	1.02E-09
Sr-89	1.32E-03	0.00E+00	3.77E-05	0.00E+00	0.00E+00	0.00E+00	5.11E-05
Sr-90	1.70E-02	0.00E+00	4.31E-03	0.00E+00	0.00E+00	0.00E+00	2.29E-04
Sr-91	2.40E-05	0.00E+00	9.06E-07	0.00E+00	0.00E+00	0.00E+00	5.30E-05
Sr-92	9.03E-06	0.00E+00	3.62E-07	0.00E+00	0.00E+00	0.00E+00	1.71E-04
Y-90	4.11E-08	0.00E+00	1.10E-09	0.00E+00	0.00E+00	0.00E+00	1.17E-04
Y-91m	3.82E-10	0.00E+00	1.39E-11	0.00E+00	0.00E+00	0.00E+00	7.48E-07
Y-91	6.02E-07	0.00E+00	1.61E-08	0.00E+00	0.00E+00	0.00E+00	8.02E-05
Y-92	3.60E-09	0.00E+00	1.03E-10	0.00E+00	0.00E+00	0.00E+00	1.04E-04
Y-93	1.14E-08	0.00E+00	3.13E-10	0.00E+00	0.00E+00	0.00E+00	1.70E-04
Zr-95	1.16E-07	2.55E-08	2.27E-08	0.00E+00	3.65E-08	0.00E+00	2.66E-05
Zr-97	6.99E-09	1.01E-09	5.96E-10	0.00E+00	1.45E-09	0.00E+00	1.53E-04
Nb-95	2.25E-08	8.76E-09	6.26E-09	0.00E+00	8.23E-09	0.00E+00	1.62E-05
Mo-99	0.00E+00	1.33E-05	3.29E-06	0.00E+00	2.84E-05	0.00E+00	1.10E-05
Tc-99m	9.23E-10	1.81E-09	3.00E-08	0.00E+00	2.63E-08	9.19E-10	1.03E-06
Tc-101	1.07E-09	1.12E-09	1.42E-08	0.00E+00	1.91E-08	5.92E-10	3.56E-09
Ru-103	7.31E-07	0.00E+00	2.81E-07	0.00E+00	1.84E-06	0.00E+00	1.89E-05
Ru-105	6.45E-08	0.00E+00	2.34E-08	0.00E+00	5.67E-07	0.00E+00	4.21E-05
Ru-106	1.17E-05	0.00E+00	1.46E-06	0.00E+00	1.58E-05	0.00E+00	1.82E-04
Ag-110m	5.39E-07	3.64E-07	2.91E-07	0.00E+00	6.78E-07	0.00E+00	4.33E-05
Sb-122	9.83E-07	1.45E-08	2.88E-07	1.26E-08	0.00E+00	4.00E-07	7.56E-05
Sb-124	1.11E-05	1.44E-07	3.88E-06	2.44E-08	0.00E+00	6.15E-06	6.93E-05
Sb-125	7.15E-06	5.51E-08	1.50E-06	6.63E-09	0.00E+00	3.98E-06	1.71E-05

Table 3-3c

CHILD INGESTION DOSE FACTORS

(mrem per pCi ingested)

Isotope	BONE	LIVER	TOT BODY	THYROID	KIDNEY	LUNG	GILLI
Te-125m	1.14E-05	3.09E-06	1.52E-06	3.20E-06	0.00E+00	0.00E+00	1.10E-05
Te-127m	2.89E-05	7.78E-06	3.43E-06	6.91E-06	8.24E-05	0.00E+00	2.34E-05
Te-127	4.71E-07	1.27E-07	1.01E-07	3.26E-07	1.34E-06	0.00E+00	1.84E-05
Te-129m	4.87E-05	1.36E-05	7.56E-06	1.57E-05	1.43E-04	0.00E+00	5.94E-05
Te-129	1.34E-07	3.74E-08	3.18E-08	9.56E-08	3.92E-07	0.00E+00	8.34E-06
Te-131m	7.20E-06	2.49E-06	2.65E-06	5.12E-06	2.41E-05	0.00E+00	1.01E-04
Te-131	8.30E-08	2.53E-08	2.47E-08	6.35E-08	2.51E-07	0.00E+00	4.36E-07
Te-132	1.01E-05	4.47E-06	5.40E-06	6.51E-06	4.15E-05	0.00E+00	4.50E-05
I-130	2.92E-06	5.90E-06	3.04E-06	6.50E-04	8.82E-06	0.00E+00	2.76E-06
I-131	1.72E-05	1.73E-05	9.83E-06	5.72E-03	2.84E-05	0.00E+00	1.54E-06
I-132	8.00E-07	1.47E-06	6.76E-07	6.82E-05	2.25E-06	0.00E+00	1.73E-06
I-133	5.92E-06	7.32E-06	2.77E-06	1.36E-03	1.22E-05	0.00E+00	2.95E-06
I-134	4.19E-07	7.78E-07	3.58E-07	1.79E-05	1.19E-06	0.00E+00	5.16E-07
I-135	1.75E-06	3.15E-06	1.49E-06	2.79E-04	4.83E-06	0.00E+00	2.40E-06
Cs-134	2.34E-04	3.84E-04	8.10E-05	0.00E+00	1.19E-04	4.27E-05	2.07E-06
Cs-136	2.35E-05	6.46E-05	4.18E-05	0.00E+00	3.44E-05	5.13E-06	2.27E-06
Cs-137	3.27E-04	3.13E-04	4.62E-05	0.00E+00	1.02E-04	3.67E-05	1.96E-06
Cs-138	2.28E-07	3.17E-07	2.01E-07	0.00E+00	2.23E-07	2.40E-08	1.46E-07
Ba-139	4.14E-07	2.21E-10	1.20E-08	0.00E+00	1.93E-10	1.30E-10	2.39E-05
Ba-140	8.31E-05	7.28E-08	4.85E-06	0.00E+00	2.37E-08	4.34E-08	4.21E-05
Ba-141	2.00E-07	1.12E-10	6.51E-09	0.00E+00	9.69E-11	6.58E-10	1.14E-07
Ba-142	8.74E-08	6.29E-11	4.88E-09	0.00E+00	5.09E-11	3.70E-11	1.14E-09
La-140	1.01E-08	3.53E-09	1.19E-09	0.00E+00	0.00E+00	0.00E+00	9.84E-05
La-142	5.24E-10	1.67E-10	5.23E-11	0.00E+00	0.00E+00	0.00E+00	3.31E-05
Ce-141	3.97E-08	1.98E-08	2.94E-09	0.00E+00	8.68E-09	0.00E+00	2.47E-05
Ce-143	6.99E-09	3.79E-06	5.49E-10	0.00E+00	1.59E-09	0.00E+00	5.55E-05
Ce-144	2.08E-06	6.52E-07	1.11E-07	0.00E+00	3.61E-07	0.00E+00	1.70E-04
Pr-143	3.93E-08	1.18E-08	1.95E-09	0.00E+00	6.39E-09	0.00E+00	4.24E-05
Pr-144	1.29E-10	3.99E-11	6.49E-12	0.00E+00	2.11E-11	0.00E+00	8.59E-08
Nd-147	2.79E-08	2.26E-08	1.75E-09	0.00E+00	1.24E-08	0.00E+00	3.58E-05
W-187	4.29E-07	2.54E-07	1.14E-07	0.00E+00	0.00E+00	0.00E+00	3.57E-05
Np-239	5.25E-09	3.77E-10	2.65E-10	0.00E+00	1.09E-09	0.00E+00	2.79E-05
K-40	0.00E+00	0.00E+00	0.00E+00	0.00E+00	0.00E+00	0.00E+00	0.00E+00
Co-57	0.00E+00	4.93E-07	9.98E-07	0.00E+00	0.00E+00	0.00E+00	4.04E-06
Sr-85	0.00E+00	0.00E+00	0.00E+00	0.00E+00	0.00E+00	0.00E+00	0.00E+00
Y-88	0.00E+00	0.00E+00	0.00E+00	0.00E+00	0.00E+00	0.00E+00	0.00E+00
Nb-94	0.00E+00	0.00E+00	0.00E+00	0.00E+00	0.00E+00	0.00E+00	0.00E+00
Nb-97	2.17E-10	3.92E-11	1.83E-11	0.00E+00	4.35E-11	0.00E+00	1.21E-05
Cd-109	0.00E+00	0.00E+00	0.00E+00	0.00E+00	0.00E+00	0.00E+00	0.00E+00
Sn-113	0.00E+00	0.00E+00	0.00E+00	0.00E+00	0.00E+00	0.00E+00	0.00E+00
Ba-133	0.00E+00	0.00E+00	0.00E+00	0.00E+00	0.00E+00	0.00E+00	0.00E+00
Te-134	1.29E-07	5.80E-08	7.74E-08	1.02E-07	5.37E-07	0.00E+00	5.89E-07
Ce-139	0.00E+00	0.00E+00	0.00E+00	0.00E+00	0.00E+00	0.00E+00	0.00E+00
Hg-203	0.00E+00	0.00E+00	0.00E+00	0.00E+00	0.00E+00	0.00E+00	0.00E+00

Table 3-3d

INFANT INGESTION DOSE FACTORS

(mrem per pCi ingested)

Isotope	BONE	LIVER	TOT BODY	THYROID	KIDNEY	LUNG	GILLI
H-3	0.00E+00	3.08E-07	3.08E-07	3.08E-07	3.08E-07	3.08E-07	3.08E-07
Be-7	2.26E-08	4.72E-08	2.51E-08	0.00E+00	3.34E-08	0.00E+00	1.11E-06
Na-24	1.01E-05	1.01E-05	1.01E-05	1.01E-05	1.01E-05	1.01E-05	1.01E-05
P-32	1.70E-03	1.00E-04	6.59E-05	0.00E+00	0.00E+00	0.00E+00	2.30E-05
Cr-51	0.00E+00	0.00E+00	1.41E-08	9.20E-09	2.01E-09	1.79E-08	4.11E-07
Mn-54	0.00E+00	1.99E-05	4.51E-06	0.00E+00	4.41E-06	0.00E+00	7.31E-06
Mn-56	0.00E+00	8.18E-07	1.41E-07	0.00E+00	7.03E-07	0.00E+00	7.43E-05
Fe-55	1.39E-05	8.98E-06	2.40E-06	0.00E+00	0.00E+00	4.39E-06	1.14E-06
Fe-59	3.08E-05	5.38E-05	2.12E-05	0.00E+00	0.00E+00	1.59E-05	2.57E-05
Co-58	0.00E+00	3.60E-06	8.98E-06	0.00E+00	0.00E+00	0.00E+00	8.97E-06
Co-60	0.00E+00	1.08E-05	2.55E-05	0.00E+00	0.00E+00	0.00E+00	2.57E-05
Ni-63	6.34E-04	3.92E-05	2.20E-05	0.00E+00	0.00E+00	0.00E+00	1.95E-06
Ni-65	4.70E-06	5.32E-07	2.42E-07	0.00E+00	0.00E+00	0.00E+00	4.05E-05
Cu-64	0.00E+00	6.09E-07	2.82E-07	0.00E+00	1.03E-06	0.00E+00	1.25E-05
Zn-65	1.84E-05	6.31E-05	2.91E-05	0.00E+00	3.06E-05	0.00E+00	5.33E-05
Zn-69	9.33E-08	1.68E-07	1.25E-08	0.00E+00	6.98E-08	0.00E+00	1.37E-05
Br-83	0.00E+00	0.00E+00	3.63E-07	0.00E+00	0.00E+00	0.00E+00	0.00E+00
Br-84	0.00E+00	0.00E+00	3.82E-07	0.00E+00	0.00E+00	0.00E+00	0.00E+00
Br-85	0.00E+00	0.00E+00	1.94E-08	0.00E+00	0.00E+00	0.00E+00	0.00E+00
Rb-86	0.00E+00	1.70E-04	8.40E-05	0.00E+00	0.00E+00	0.00E+00	4.35E-06
Rb-88	0.00E+00	4.98E-07	2.73E-07	0.00E+00	0.00E+00	0.00E+00	4.85E-07
Rb-89	0.00E+00	2.86E-07	1.97E-07	0.00E+00	0.00E+00	0.00E+00	9.74E-08
Sr-89	2.51E-03	0.00E+00	7.20E-05	0.00E+00	0.00E+00	0.00E+00	5.16E-05
Sr-90	1.85E-02	0.00E+00	4.71E-03	0.00E+00	0.00E+00	0.00E+00	2.31E-04
Sr-91	5.00E-05	0.00E+00	1.81E-06	0.00E+00	0.00E+00	0.00E+00	5.92E-05
Sr-92	1.92E-05	0.00E+00	7.13E-07	0.00E+00	0.00E+00	0.00E+00	2.07E-04
Y-90	8.69E-08	0.00E+00	2.33E-09	0.00E+00	0.00E+00	0.00E+00	1.20E-04
Y-91m	8.10E-10	0.00E+00	2.76E-11	0.00E+00	0.00E+00	0.00E+00	2.70E-06
Y-91	1.13E-06	0.00E+00	3.01E-08	0.00E+00	0.00E+00	0.00E+00	8.10E-05
Y-92	7.65E-09	0.00E+00	2.15E-10	0.00E+00	0.00E+00	0.00E+00	1.46E-04
Y-93	2.43E-08	0.00E+00	6.62E-10	0.00E+00	0.00E+00	0.00E+00	1.92E-04
Zr-95	2.06E-07	5.02E-08	3.56E-08	0.00E+00	5.41E-08	0.00E+00	2.50E-05
Zr-97	1.48E-08	2.54E-09	1.16E-09	0.00E+00	2.56E-09	0.00E+00	1.62E-04
Nb-95	4.20E-08	1.73E-08	1.00E-08	0.00E+00	1.24E-08	0.00E+00	1.46E-05
Mo-99	0.00E+00	3.40E-05	6.63E-06	0.00E+00	5.08E-05	0.00E+00	1.12E-05
Tc-99m	1.92E-09	3.96E-09	5.10E-08	0.00E+00	4.26E-08	2.07E-09	1.15E-06
Tc-101	2.27E-09	2.86E-09	2.83E-08	0.00E+00	3.40E-08	1.56E-09	4.86E-07
Ru-103	1.48E-06	0.00E+00	4.95E-07	0.00E+00	3.08E-06	0.00E+00	1.80E-05
Ru-105	1.36E-07	0.00E+00	4.58E-08	0.00E+00	1.00E-06	0.00E+00	5.41E-05
Ru-106	2.41E-05	0.00E+00	3.01E-06	0.00E+00	2.85E-05	0.00E+00	1.83E-04
Ag-110m	9.96E-07	7.27E-07	4.81E-07	0.00E+00	1.04E-06	0.00E+00	3.77E-05
Sb-122	2.10E-06	3.85E-08	6.13E-07	3.14E-08	0.00E+00	1.09E-06	7.65E-05
Sb-124	2.14E-05	3.15E-07	6.63E-06	5.68E-08	0.00E+00	1.34E-05	6.60E-05
Sb-125	1.23E-05	1.19E-07	2.53E-06	1.54E-08	0.00E+00	7.72E-06	1.64E-05

Table 3-3d

INFANT INGESTION DOSE FACTORS

(mrem per pCi ingested)

Isotope	BONE	LIVER	TOT BODY	THYROID	KIDNEY	LUNG	GILLI
Te-125m	2.33E-05	7.79E-06	3.15E-06	7.84E-06	0.00E+00	0.00E+00	1.11E-05
Te-127m	5.85E-05	1.94E-05	7.08E-06	1.69E-05	1.44E-04	0.00E+00	2.36E-05
Te-127	1.00E-06	3.35E-07	2.15E-07	8.14E-07	2.44E-06	0.00E+00	2.10E-05
Te-129m	1.00E-04	3.43E-05	1.54E-05	3.84E-05	2.50E-04	0.00E+00	5.97E-05
Te-129	2.84E-07	9.79E-08	6.63E-08	2.38E-07	7.07E-07	0.00E+00	2.27E-05
Te-131m	1.52E-05	6.12E-06	5.05E-06	1.24E-05	4.21E-05	0.00E+00	1.03E-04
Te-131	1.76E-07	6.50E-08	4.94E-08	1.57E-07	4.50E-07	0.00E+00	7.11E-06
Te-132	2.08E-05	1.03E-05	9.61E-06	1.52E-05	6.44E-05	0.00E+00	3.81E-05
I-130	6.00E-06	1.32E-05	5.30E-06	1.48E-03	1.45E-05	0.00E+00	2.83E-06
I-131	3.59E-05	4.23E-05	1.86E-05	1.39E-02	4.94E-05	0.00E+00	1.51E-06
I-132	1.66E-06	3.37E-06	1.20E-06	1.58E-04	3.76E-06	0.00E+00	2.73E-06
I-133	1.25E-05	1.82E-05	5.33E-06	3.31E-03	2.14E-05	0.00E+00	3.08E-06
I-134	8.69E-07	1.78E-06	6.33E-07	4.15E-05	1.99E-06	0.00E+00	1.84E-06
I-135	3.64E-06	7.24E-06	2.64E-06	6.49E-04	8.07E-06	0.00E+00	2.62E-06
Cs-134	3.77E-04	7.03E-04	7.10E-05	0.00E+00	1.81E-04	7.42E-05	1.91E-06
Cs-136	4.59E-05	1.35E-04	5.04E-05	0.00E+00	5.38E-05	1.10E-05	2.05E-06
Cs-137	5.22E-04	6.11E-04	4.33E-05	0.00E+00	1.64E-04	6.64E-05	1.91E-06
Cs-138	4.81E-07	7.82E-07	3.79E-07	0.00E+00	3.90E-07	6.09E-08	1.25E-06
Ba-139	8.81E-07	5.84E-10	2.55E-08	0.00E+00	3.51E-10	3.54E-10	5.58E-05
Ba-140	1.71E-04	1.71E-07	8.81E-06	0.00E+00	4.06E-08	1.05E-07	4.20E-05
Ba-141	4.25E-07	2.91E-10	1.34E-08	0.00E+00	1.75E-10	1.77E-10	5.19E-06
Ba-142	1.84E-07	1.53E-10	9.06E-09	0.00E+00	8.81E-11	9.26E-11	7.59E-07
La-140	2.11E-08	8.32E-09	2.14E-09	0.00E+00	0.00E+00	0.00E+00	9.77E-05
La-142	1.10E-09	4.04E-10	9.67E-11	0.00E+00	0.00E+00	0.00E+00	6.86E-05
Ce-141	7.87E-08	4.80E-08	5.65E-09	0.00E+00	1.48E-08	0.00E+00	2.48E-05
Ce-143	1.48E-08	9.82E-06	1.12E-09	0.00E+00	2.86E-09	0.00E+00	5.73E-05
Ce-144	2.98E-06	1.22E-06	1.67E-07	0.00E+00	4.93E-07	0.00E+00	1.71E-04
Pr-143	8.13E-08	3.04E-08	4.03E-09	0.00E+00	1.13E-08	0.00E+00	4.29E-05
Pr-144	2.74E-10	1.06E-10	1.38E-11	0.00E+00	3.84E-11	0.00E+00	4.93E-06
Nd-147	5.53E-08	5.68E-08	3.48E-09	0.00E+00	2.19E-08	0.00E+00	3.60E-05
W-187	9.03E-07	6.28E-07	2.17E-07	0.00E+00	0.00E+00	0.00E+00	3.69E-05
Np-239	1.11E-08	9.93E-10	5.61E-10	0.00E+00	1.98E-09	0.00E+00	2.87E-05
K-40	0.00E+00	0.00E+00	0.00E+00	0.00E+00	0.00E+00	0.00E+00	0.00E+00
Co-57	0.00E+00	1.15E-06	1.87E-06	0.00E+00	0.00E+00	0.00E+00	3.92E-06
Sr-85	0.00E+00	0.00E+00	0.00E+00	0.00E+00	0.00E+00	0.00E+00	0.00E+00
Y-88	0.00E+00	0.00E+00	0.00E+00	0.00E+00	0.00E+00	0.00E+00	0.00E+00
Nb-94	0.00E+00	0.00E+00	0.00E+00	0.00E+00	0.00E+00	0.00E+00	0.00E+00
Nb-97	0.00E+00	0.00E+00	0.00E+00	0.00E+00	0.00E+00	0.00E+00	0.00E+00
Cd-109	0.00E+00	0.00E+00	0.00E+00	0.00E+00	0.00E+00	0.00E+00	0.00E+00
Sn-113	0.00E+00	0.00E+00	0.00E+00	0.00E+00	0.00E+00	0.00E+00	0.00E+00
Ba-133	0.00E+00	0.00E+00	0.00E+00	0.00E+00	0.00E+00	0.00E+00	0.00E+00
Te-134	0.00E+00	0.00E+00	0.00E+00	0.00E+00	0.00E+00	0.00E+00	0.00E+00
Ce-139	0.00E+00	0.00E+00	0.00E+00	0.00E+00	0.00E+00	0.00E+00	0.00E+00
Hg-203	0.00E+00	0.00E+00	0.00E+00	0.00E+00	0.00E+00	0.00E+00	0.00E+00

Table 3-4

Total Body Dose Factors

Ki

From Noble Gases (gamma)

	Gamma			Finite Cloud Correction Factor**				
Nuclide	TB factor *	x	(pCi/uCi)	x	Unit 2	Unit 3	=	U2 Ki ***	U3 Ki ***
Kr-83m	7.56E-08		1E+6		8.86E-01	5.78E-01		6.70E-02	4.37E-02
Kr-85m	1.17E-03		1E+6		7.49E-01	4.46E-01		8.76E+02	5.22E+02
Kr-85	1.61E-05		1E+6		6.73E-01	3.85E-01		1.08E+01	6.19E+00
Kr-87	5.92E-03		1E+6		5.68E-01	3.09E-01		3.36E+03	1.83E+03
Kr-88	1.47E-02		1E+6		5.40E-01	2.88E-01		7.93E+03	4.23E+03
Kr-89	1.66E-02		1E+6		5.60E-01	3.03E-01		9.30E+03	5.03E+03
Kr-90	1.56E-02		1E+6		5.97E-01	3.29E-01		9.31E+03	5.13E+03
Xe-131m	9.15E-05		1E+6		8.67E-01	5.62E-01		7.94E+01	5.14E+01
Xe-133m	2.51E-04		1E+6		8.17E-01	5.12E-01		2.05E+02	1.29E+02
Xe-133	2.94E-04		1E+6		8.86E-01	5.78E-01		2.60E+02	1.70E+02
Xe-135m	3.12E-03		1E+6		6.75E-01	3.87E-01		2.11E+03	1.21E+03
Xe-135	1.81E-03		1E+6		7.60E-01	4.55E-01		1.38E+03	8.24E+02
Xe-137	1.42E-03		1E+6		6.46E-01	3.65E-01		9.18E+02	5.18E+02
Xe-138	8.83E-03		1E+6		5.75E-01	3.14E-01		5.07E+03	2.77E+03
Ar-41	8.84E-03		1E+6		5.89E-01	3.21E-01		5.21E+03	2.84E+03

* From Reg Guide 1.109, Table B-1 (mrem/yr per pCi/m^3)

** The finite cloud correction factor is described in Section 3.6

*** Ki (mrem/yr per uCi/m^3)

Table 3-5

Skin Dose Factors

Li

From Noble Gases (beta)

Nucline	Beta Skin* Dose Factor	x	(pCi/uCi)	=	Li**
Kr-83m	0.00E+00		1E+6		0.00E+00
Kr-85m	1.46E-03		1E+6		1.46E+03
Kr-85	1.34E-03		1E+6		1.34E+03
Kr-87	9.73E-03		1E+6		9.73E+03
Kr-88	2.37E-03		1E+6		2.37E+03
Kr-89	1.01E-02		1E+6		1.01E+04
Kr-90	7.29E-03		1E+6		7.29E+03
Xe-131m	4.76E-04		1E+6		4.76E+02
Xe-133m	9.94E-04		1E+6		9.94E+02
Xe-133	3.06E-04		1E+6		3.06E+02
Xe-135m	7.11E-04		1E+6		7.11E+02
Xe-135	1.86E-03		1E+6		1.86E+03
Xe-137	1.22E-02		1E+6		1.22E+04
Xe-138	4.13E-03		1E+6		4.13E+03
Ar-41	2.69E-03		1E+6		2.69E+03

* From Reg Guide 1.109, Table B-1 (mrem/yr per pCi/m^3)

** Li (mrem/yr per uCi/m^3)

Table 3-6

Air Dose Factors

Mi

From Noble Gases (gamma)

Nuclide	Gamma factor *	x	(pCi/uCi)	x	Finite Cloud Correction Factor** Unit 2	Unit 3	=	U2 Mi ***	U3 Mi ***
Kr-83m	1.93E-05		1E+6		8.86E-01	5.78E-01		1.71E+01	1.12E+01
Kr-85m	1.23E-03		1E+6		7.49E-01	4.46E-01		9.21E+02	5.49E+02
Kr-85	1.72E-05		1E+6		6.73E-01	3.85E-01		1.16E+01	6.62E+00
Kr-87	6.17E-03		1E+6		5.68E-01	3.09E-01		3.50E+03	1.91E+03
Kr-88	1.52E-02		1E+6		5.40E-01	2.88E-01		8.20E+03	4.37E+03
Kr-89	1.73E-02		1E+6		5.60E-01	3.03E-01		9.69E+03	5.24E+03
Kr-90	1.63E-02		1E+6		5.97E-01	3.29E-01		9.73E+03	5.36E+03
Xe-131m	1.56E-04		1E+6		8.67E-01	5.62E-01		1.35E+02	8.77E+01
Xe-133m	3.27E-04		1E+6		8.17E-01	5.12E-01		2.67E+02	1.68E+02
Xe-133	3.53E-04		1E+6		8.86E-01	5.78E-01		3.13E+02	2.04E+02
Xe-135m	3.36E-03		1E+6		6.75E-01	3.87E-01		2.27E+03	1.30E+03
Xe-135	1.92E-03		1E+6		7.60E-01	4.55E-01		1.46E+03	8.74E+02
Xe-137	1.51E-03		1E+6		6.46E-01	3.65E-01		9.76E+02	5.51E+02
Xe-138	9.21E-03		1E+6		5.75E-01	3.14E-01		5.29E+03	2.89E+03
Ar-41	9.30E-03		1E+6		5.89E-01	3.21E-01		5.48E+03	2.99E+03

* From Reg Guide 1.109, Table B-1 (mrad/yr per pCi/m^3)

** The finite cloud correction factor is described in Section 3.6

*** Mi (mrad/yr per uCi/m^3)

Table 3-7

Air Dose Factors

Ni

From Noble Gases (beta)

Nucline	Beta * Factor	x	(pCi/uCi)	=	Ni**
Kr-83m	2.88E-04		1E+6		2.88E+02
Kr-85m	1.97E-03		1E+6		1.97E+03
Kr-85	1.95E-03		1E+6		1.95E+03
Kr-87	1.03E-02		1E+6		1.03E+04
Kr-88	2.93E-03		1E+6		2.93E+03
Kr-89	1.06E-02		1E+6		1.06E+04
Kr-90	7.83E-03		1E+6		7.83E+03
Xe-131m	1.11E-03		1E+6		1.11E+03
Xe-133m	1.48E-03		1E+6		1.48E+03
Xe-133	1.05E-03		1E+6		1.05E+03
Xe-135m	7.39E-04		1E+6		7.39E+02
Xe-135	2.46E-03		1E+6		2.46E+03
Xe-137	1.27E-02		1E+6		1.27E+04
Xe-138	4.75E-03		1E+6		4.75E+03
Ar-41	3.28E-03		1E+6		3.28E+03

* From Reg Guide 1.109, Table B-1 (mrad/yr per pCi/m^3)

** Ni (mrad/yr per uCi/m^3)

Table 3 – 8

NOBLE GAS DOSE FACTORS

For Instantaneous and Time Average Mixtures at the Site Boundary, Units 2 and 3

Radionuclide	Instantaneous Mix (%)	Time Average Mix (%)
Kr-85m	3.09	
Kr-85	0	18.98
Kr-87	2.80	
Kr-88	5.22	
Xe-131m	0	0.162
Xe-133m	1.39	0.485
Xe-133	56.8	78.1
Xe-135m	1.34	
Xe-135	19.2	2.21
Xe-138	2.81	
Ar-41	7.43	
Total	100	100

Unit 2 effective instantaneous dose factors	Unit 3 effective instantaneous dose factors	Units	Unit 2 effective average dose factors	Unit 3 effective average dose factors
$\overline{K} = 1507$	$\overline{K} = 849$	mrem/yr per uCi/m^3	$\overline{K} = 237$	$\overline{K} = 153$
$\overline{L} = 1310$	$\overline{L} = 1310$	mrem/yr per uCi/m^3	$\overline{L} = 540$	$\overline{L} = 540$
$\overline{M} = 1601$	$\overline{M} = 905$	mrad/yr per uCi/m^3	$\overline{M} = 281$	$\overline{M} = 181$
$\overline{N} = 1977$	$\overline{N} = 1977$	mrad/yr per uCi/m^3	$\overline{N} = 1254$	$\overline{N} = 1254$

Instantaneous Mixture Basis:
This mix defines the shared-site noble gas limits between the two units, and is used for administrative guidelines for instantaneous releases based on an RCS noble gas mix at 1.6 yrs into a 24-month cycle, with two failed fuel rods, per Reference 30. These mixtures provide conservative application for calculating setpoints per 10CFR20, in terms of uCi/sec before an actual sample of the release is available, per Appendix I.

Time Averaged Release Mixture Basis:
This mix defines the routine (time-averaged) releases from either unit. It was derived from average noble-gas releases from year 2000-2003 at IPEC units 2 and 3 per Reference 30. They are used in conjunction with calculations to determine representative quarterly and annual time averaged release rates in curies per second for administrative purposes only, per Appendix I.

TABLE 3 – 9

LOCATIONS OF SITE BOUNDARY AND NEAREST RESIDENCE

Sector by compass point	Distance to Site Boundary from Unit 2 Plant Vent, in meters	Distance to Site Boundary from Unit 3 Plant Vent, in meters	Distance to nearest residence, from Unit 1 superheater, in meters
N	**RIVER**	**RIVER**	**1788.1**
NNE	**RIVER**	**RIVER**	**3111.3**
NE	**550**	**636**	**1907.3**
ENE	**600**	**775**	**1478.2**
E	**662**	**785**	**1370.9**
ESE	**569**	**622**	**715.2**
SE	**553**	**564**	**1168.2**
SSE	**569**	**551**	**1239.7**
S	**700**	**566**	**1132.5**
SSW	**755**	**480**	**1573.5**
SW	**544**	**350**	**3015.9**
WSW	**RIVER**	**RIVER**	**2169.6**
W	**RIVER**	**RIVER**	**1918.7**
WNW	**RIVER**	**RIVER**	**1752.4**
NW	**RIVER**	**RIVER**	**1692.7**
NNW	**RIVER**	**RIVER**	**1609.3**

Distances to the Site Boundary are unit-specific and measured from the applicable unit's Plant Vent release point. Distances to the Nearest Residence are measured from the Unit 1 Superheater Stack for both Units 2 and 3, per Reference 31.

Table 3-10a

ADULT INHALATION Ri(I) (mrem/yr per uCi/m^3)

Isotope	BONE	LIVER	TOT BODY	THYROID	KIDNEY	LUNG	GILLI
H-3	0.00E+00	1.26E+03	1.26E+03	1.26E+03	1.26E+03	1.26E+03	1.26E+03
Be-7	0.00E+00	0.00E+00	0.00E+00	0.00E+00	0.00E+00	0.00E+00	0.00E+00
Na-24	1.02E+04	1.02E+04	1.02E+04	1.02E+04	1.02E+04	1.02E+04	1.02E+04
P-32	1.32E+06	7.71E+04	5.01E+04	0.00E+00	0.00E+00	0.00E+00	8.64E+04
Cr-51	0.00E+00	0.00E+00	1.00E+02	5.95E+01	2.28E+01	1.44E+04	3.32E+03
Mn-54	0.00E+00	3.96E+04	6.30E+03	0.00E+00	9.84E+03	1.40E+06	7.74E+04
Mn-56	0.00E+00	1.24E+00	1.83E-01	0.00E+00	1.30E+00	9.44E+03	2.02E+04
Fe-55	2.46E+04	1.70E+04	3.94E+03	0.00E+00	0.00E+00	7.21E+04	6.03E+03
Fe-59	1.18E+04	2.78E+04	1.06E+04	0.00E+00	0.00E+00	1.02E+06	1.88E+05
Co-58	0.00E+00	1.58E+03	2.07E+03	0.00E+00	0.00E+00	9.28E+05	1.06E+05
Co-60	0.00E+00	1.15E+04	1.48E+04	0.00E+00	0.00E+00	5.97E+06	2.85E+05
Ni-63	4.32E+05	3.14E+04	1.45E+04	0.00E+00	0.00E+00	1.78E+05	1.34E+04
Ni-65	1.54E+00	2.10E-01	9.12E-02	0.00E+00	0.00E+00	5.60E+03	1.23E+04
Cu-64	0.00E+00	1.46E+00	6.15E-01	0.00E+00	4.62E+00	6.78E+03	4.90E+04
Zn-65	3.24E+04	1.03E+05	4.66E+04	0.00E+00	6.90E+04	8.64E+05	5.34E+04
Zn-69	3.38E-02	6.51E-02	4.52E-03	0.00E+00	4.22E-02	9.20E+02	1.63E+01
Br-83	0.00E+00	0.00E+00	2.41E+02	0.00E+00	0.00E+00	0.00E+00	2.32E+02
Br-84	0.00E+00	0.00E+00	3.13E+02	0.00E+00	0.00E+00	0.00E+00	1.64E-03
Br-85	0.00E+00	0.00E+00	1.28E+01	0.00E+00	0.00E+00	0.00E+00	0.00E+00
Rb-86	0.00E+00	1.35E+05	5.90E+04	0.00E+00	0.00E+00	0.00E+00	1.66E+04
Rb-88	0.00E+00	3.87E+02	1.93E+02	0.00E+00	0.00E+00	0.00E+00	3.34E-09
Rb-89	0.00E+00	2.56E+02	1.70E+02	0.00E+00	0.00E+00	0.00E+00	9.28E-12
Sr-89	3.04E+05	0.00E+00	8.72E+03	0.00E+00	0.00E+00	1.40E+06	3.50E+05
Sr-90	9.92E+07	0.00E+00	6.10E+06	0.00E+00	0.00E+00	9.60E+06	7.22E+05
Sr-91	6.19E+01	0.00E+00	2.50E+00	0.00E+00	0.00E+00	3.65E+04	1.91E+05
Sr-92	6.74E+00	0.00E+00	2.91E-01	0.00E+00	0.00E+00	1.65E+04	4.30E+04
Y-90	2.09E+03	0.00E+00	5.61E+01	0.00E+00	0.00E+00	1.70E+05	5.06E+05
Y-91m	2.61E-01	0.00E+00	1.02E-02	0.00E+00	0.00E+00	1.92E+03	1.33E+00
Y-91	4.62E+05	0.00E+00	1.24E+04	0.00E+00	0.00E+00	1.70E+06	3.85E+05
Y-92	1.03E+01	0.00E+00	3.02E-01	0.00E+00	0.00E+00	1.57E+04	7.35E+04
Y-93	9.44E+01	0.00E+00	2.61E+00	0.00E+00	0.00E+00	4.85E+04	4.22E+05
Zr-95	1.07E+05	3.44E+04	2.33E+04	0.00E+00	5.42E+04	1.77E+06	1.50E+05
Zr-97	9.68E+01	1.96E+01	9.04E+00	0.00E+00	2.97E+01	7.87E+04	5.23E+05
Nb-95	1.41E+04	7.82E+03	4.21E+03	0.00E+00	7.74E+03	5.05E+05	1.04E+05
Mo-99	0.00E+00	1.21E+02	2.30E+01	0.00E+00	2.91E+02	9.12E+04	2.48E+05
Tc-99m	1.03E-03	2.91E-03	3.70E-02	0.00E+00	4.42E-02	7.64E+02	4.16E+03
Tc-101	4.18E-05	6.02E-05	5.90E-04	0.00E+00	1.08E-03	3.99E+02	1.09E-11
Ru-103	1.53E+03	0.00E+00	6.58E+02	0.00E+00	5.83E+03	5.05E+05	1.10E+05
Ru-105	7.90E-01	0.00E+00	3.11E-01	0.00E+00	1.02E+00	1.10E+04	4.82E+04
Ru-106	6.91E+04	0.00E+00	8.72E+03	0.00E+00	1.34E+05	9.36E+06	9.12E+05
Ag-110m	1.08E+04	1.00E+04	5.94E+03	0.00E+00	1.97E+04	4.63E+06	3.02E+05
Sb-122	0.00E+00	0.00E+00	0.00E+00	0.00E+00	0.00E+00	0.00E+00	0.00E+00
Sb-124	3.12E+04	5.89E+02	1.24E+04	7.55E+01	0.00E+00	2.48E+06	4.06E+05
Sb-125	5.34E+04	5.95E+02	1.26E+04	5.40E+01	0.00E+00	1.74E+06	1.01E+05

Table 3-10a

ADULT INHALATION Ri(I) (mrem/yr per uCi/m^3)

Isotope	BONE	LIVER	TOT BODY	THYROID	KIDNEY	LUNG	GILLI
Te-125m	3.42E+03	1.58E+03	4.67E+02	1.05E+03	1.24E+04	3.14E+05	7.06E+04
Te-127m	1.26E+04	5.77E+03	1.57E+03	3.29E+03	4.58E+04	9.60E+05	1.50E+05
Te-127	1.40E+00	6.42E-01	3.10E-01	1.06E+00	5.10E+00	6.51E+03	5.74E+04
Te-129m	9.76E+03	4.67E+03	1.58E+03	3.44E+03	3.66E+04	1.16E+06	3.83E+05
Te-129	4.98E-02	2.39E-02	1.24E-02	3.90E-02	1.87E-01	1.94E+03	1.57E+02
Te-131m	6.99E+01	4.36E+01	2.90E+01	5.50E+01	3.09E+02	1.46E+05	5.56E+05
Te-131	1.11E-02	5.95E-03	3.59E-03	9.36E-03	4.37E-02	1.39E+03	1.84E+01
Te-132	2.60E+02	2.15E+02	1.62E+02	1.90E+02	1.46E+03	2.88E+05	5.10E+05
I-130	4.58E+03	1.34E+04	5.28E+03	1.14E+06	2.09E+04	0.00E+00	7.69E+03
I-131	2.52E+04	3.58E+04	2.05E+04	1.19E+07	6.13E+04	0.00E+00	6.28E+03
I-132	1.16E+03	3.26E+03	1.16E+03	1.14E+05	5.18E+03	0.00E+00	4.06E+02
I-133	8.64E+03	1.48E+04	4.52E+03	2.15E+06	2.58E+04	0.00E+00	8.88E+03
I-134	6.44E+02	1.73E+03	6.15E+02	2.98E+04	2.75E+03	0.00E+00	1.01E+00
I-135	2.68E+03	6.98E+03	2.57E+03	4.48E+05	1.11E+04	0.00E+00	5.25E+03
Cs-134	3.73E+05	8.48E+05	7.28E+05	0.00E+00	2.87E+05	9.76E+04	1.04E+04
Cs-136	3.90E+04	1.46E+05	1.10E+05	0.00E+00	8.56E+04	1.20E+04	1.17E+04
Cs-137	4.78E+05	6.21E+05	4.28E+05	0.00E+00	2.22E+05	7.52E+04	8.40E+03
Cs-138	3.31E+02	6.21E+02	3.24E+02	0.00E+00	4.80E+02	4.86E+01	1.86E-03
Ba-139	9.36E-01	6.66E-04	2.74E-02	0.00E+00	6.22E-04	3.76E+03	8.96E+02
Ba-140	3.90E+04	4.90E+01	2.57E+03	0.00E+00	1.67E+01	1.27E+06	2.18E+05
Ba-141	1.00E-01	7.53E-05	3.36E-03	0.00E+00	7.00E-05	1.94E+03	1.16E-07
Ba-142	2.63E-02	2.70E-05	1.66E-03	0.00E+00	2.29E-05	1.19E+03	1.57E-16
La-140	3.44E+02	1.74E+02	4.58E+01	0.00E+00	0.00E+00	1.36E+05	4.58E+05
La-142	6.83E-01	3.10E-01	7.72E-02	0.00E+00	0.00E+00	6.33E+03	2.11E+03
Ce-141	1.99E+04	1.35E+04	1.53E+03	0.00E+00	6.26E+03	3.62E+05	1.20E+05
Ce-143	1.86E+02	1.38E+02	1.53E+01	0.00E+00	6.08E+01	7.98E+04	2.26E+05
Ce-144	3.43E+06	1.43E+06	1.84E+05	0.00E+00	8.48E+05	7.78E+06	8.16E+05
Pr-143	9.36E+03	3.75E+03	4.64E+02	0.00E+00	2.16E+03	2.81E+05	2.00E+05
Pr-144	3.01E-02	1.25E-02	1.53E-03	0.00E+00	7.05E-03	1.02E+03	2.15E-08
Nd-147	5.27E+03	6.10E+03	3.65E+02	0.00E+00	3.56E+03	2.21E+05	1.73E+05
W-187	8.48E+00	7.08E+00	2.48E+00	0.00E+00	0.00E+00	2.90E+04	1.55E+05
Np-239	2.30E+02	2.26E+01	1.24E+01	0.00E+00	7.00E+01	3.76E+04	1.19E+05
K-40	0.00E+00	0.00E+00	0.00E+00	0.00E+00	0.00E+00	0.00E+00	0.00E+00
Co-57	0.00E+00	6.92E+02	6.71E+02	0.00E+00	0.00E+00	3.70E+05	3.14E+04
Sr-85	3.20E+04	0.00E+00	7.76E+05	0.00E+00	0.00E+00	4.80E+05	6.08E+04
Y-88	0.00E+00	0.00E+00	0.00E+00	0.00E+00	0.00E+00	0.00E+00	0.00E+00
Nb-94	0.00E+00	0.00E+00	0.00E+00	0.00E+00	0.00E+00	0.00E+00	0.00E+00
Nb-97	2.22E-01	5.62E-02	2.05E-02	0.00E+00	6.54E-02	2.40E+03	2.42E+02
Cd-109	0.00E+00	3.92E+05	1.28E+04	0.00E+00	3.76E+05	7.28E+05	6.56E+04
Sn-113	6.56E+04	2.16E+03	4.48E+03	1.36E+03	0.00E+00	9.60E+05	1.20E+04
Ba-133	7.60E+04	3.36E+03	2.00E+04	0.00E+00	1.68E+01	1.52E+06	8.00E+04
Te-134	3.07E-02	2.58E-02	1.26E-02	2.75E-02	1.74E-01	3.47E+03	2.38E-01
Ce-139	0.00E+00	0.00E+00	0.00E+00	0.00E+00	0.00E+00	0.00E+00	0.00E+00
Hg-203	0.00E+00	0.00E+00	0.00E+00	0.00E+00	0.00E+00	0.00E+00	0.00E+00

Table 3-10b

TEEN INHALATION Ri(I) (mrem/yr per uCi/m^3)

Isotope	BONE	LIVER	TOT BODY	THYROID	KIDNEY	LUNG	GILLI
H-3	0.00E+00	1.27E+03	1.27E+03	1.27E+03	1.27E+03	1.27E+03	1.27E+03
Be-7	0.00E+00	0.00E+00	0.00E+00	0.00E+00	0.00E+00	0.00E+00	0.00E+00
Na-24	1.38E+04	1.38E+04	1.38E+04	1.38E+04	1.38E+04	1.38E+04	1.38E+04
P-32	1.89E+06	1.10E+05	7.16E+04	0.00E+00	0.00E+00	0.00E+00	9.28E+04
Cr-51	0.00E+00	0.00E+00	1.35E+02	7.50E+01	3.07E+01	2.10E+04	3.00E+03
Mn-54	0.00E+00	5.11E+04	8.40E+03	0.00E+00	1.27E+04	1.98E+06	6.68E+04
Mn-56	0.00E+00	1.70E+00	2.52E-01	0.00E+00	1.79E+00	1.52E+04	5.74E+04
Fe-55	3.34E+04	2.38E+04	5.54E+03	0.00E+00	0.00E+00	1.24E+05	6.39E+03
Fe-59	1.59E+04	3.70E+04	1.43E+04	0.00E+00	0.00E+00	1.53E+06	1.78E+05
Co-58	0.00E+00	2.07E+03	2.78E+03	0.00E+00	0.00E+00	1.34E+06	9.52E+04
Co-60	0.00E+00	1.51E+04	1.98E+04	0.00E+00	0.00E+00	8.72E+06	2.59E+05
Ni-63	5.80E+05	4.34E+04	1.98E+04	0.00E+00	0.00E+00	3.07E+05	1.42E+04
Ni-65	2.18E+00	2.93E-01	1.27E-01	0.00E+00	0.00E+00	9.36E+03	3.67E+04
Cu-64	0.00E+00	2.03E+00	8.48E-01	0.00E+00	6.41E+00	1.11E+04	6.14E+04
Zn-65	3.86E+04	1.34E+05	6.24E+04	0.00E+00	8.64E+04	1.24E+06	4.66E+04
Zn-69	4.83E-02	9.20E-02	6.46E-03	0.00E+00	6.02E-02	1.58E+03	2.85E+02
Br-83	0.00E+00	0.00E+00	3.44E+02	0.00E+00	0.00E+00	0.00E+00	0.00E+00
Br-84	0.00E+00	0.00E+00	4.33E+02	0.00E+00	0.00E+00	0.00E+00	0.00E+00
Br-85	0.00E+00	0.00E+00	1.83E+01	0.00E+00	0.00E+00	0.00E+00	0.00E+00
Rb-86	0.00E+00	1.90E+05	8.40E+04	0.00E+00	0.00E+00	0.00E+00	1.77E+04
Rb-88	0.00E+00	5.46E+02	2.72E+02	0.00E+00	0.00E+00	0.00E+00	2.92E-05
Rb-89	0.00E+00	3.52E+02	2.33E+02	0.00E+00	0.00E+00	0.00E+00	3.38E-07
Sr-89	4.34E+05	0.00E+00	1.25E+04	0.00E+00	0.00E+00	2.42E+06	3.71E+05
Sr-90	1.08E+08	0.00E+00	6.68E+06	0.00E+00	0.00E+00	1.65E+07	7.65E+05
Sr-91	8.80E+01	0.00E+00	3.51E+00	0.00E+00	0.00E+00	6.07E+04	2.59E+05
Sr-92	9.52E+00	0.00E+00	4.06E-01	0.00E+00	0.00E+00	2.74E+04	1.19E+05
Y-90	2.98E+03	0.00E+00	8.00E+01	0.00E+00	0.00E+00	2.93E+05	5.59E+05
Y-91m	3.70E-01	0.00E+00	1.42E-02	0.00E+00	0.00E+00	3.20E+03	3.02E+01
Y-91	6.61E+05	0.00E+00	1.77E+04	0.00E+00	0.00E+00	2.94E+06	4.09E+05
Y-92	1.47E+01	0.00E+00	4.29E-01	0.00E+00	0.00E+00	2.68E+04	1.65E+05
Y-93	1.35E+02	0.00E+00	3.72E+00	0.00E+00	0.00E+00	8.32E+04	5.79E+05
Zr-95	1.46E+05	4.58E+04	3.15E+04	0.00E+00	6.74E+04	2.69E+06	1.49E+05
Zr-97	1.38E+02	2.72E+01	1.26E+01	0.00E+00	4.12E+01	1.30E+05	6.30E+05
Nb-95	1.86E+04	1.03E+04	5.66E+03	0.00E+00	1.00E+04	7.51E+05	9.68E+04
Mo-99	0.00E+00	1.69E+02	3.22E+01	0.00E+00	4.11E+02	1.54E+05	2.69E+05
Tc-99m	1.38E-03	3.86E-03	4.99E-02	0.00E+00	5.76E-02	1.15E+03	6.13E+03
Tc-101	5.92E-05	8.40E-05	8.24E-04	0.00E+00	1.52E-03	6.67E+02	8.72E-07
Ru-103	2.10E+03	0.00E+00	8.96E+02	0.00E+00	7.43E+03	7.83E+05	1.09E+05
Ru-105	1.12E+00	0.00E+00	4.34E-01	0.00E+00	1.41E+00	1.82E+04	9.04E+04
Ru-106	9.84E+04	0.00E+00	1.24E+04	0.00E+00	1.90E+05	1.61E+07	9.60E+05
Ag-110m	1.38E+04	1.31E+04	7.99E+03	0.00E+00	2.50E+04	6.75E+06	2.73E+05
Sb-122	0.00E+00	0.00E+00	0.00E+00	0.00E+00	0.00E+00	0.00E+00	0.00E+00
Sb-124	4.30E+04	7.94E+02	1.68E+04	9.76E+01	0.00E+00	3.85E+06	3.98E+05
Sb-125	7.38E+04	8.08E+02	1.72E+04	7.04E+01	0.00E+00	2.74E+06	9.92E+04

Table 3-10b

TEEN INHALATION Ri(I) (mrem/yr per uCi/m^3)

Isotope	BONE	LIVER	TOT BODY	THYROID	KIDNEY	LUNG	GILLI
Te-125m	4.88E+03	2.24E+03	6.67E+02	1.40E+03	0.00E+00	5.36E+05	7.50E+04
Te-127m	1.80E+04	8.16E+03	2.18E+03	4.38E+03	6.54E+04	1.66E+06	1.59E+05
Te-127	2.01E+00	9.12E-01	4.42E-01	1.42E+00	7.28E+00	1.12E+04	8.08E+04
Te-129m	1.39E+04	6.58E+03	2.25E+03	4.58E+03	5.19E+04	1.98E+06	4.05E+05
Te-129	7.10E-02	3.38E-02	1.76E-02	5.18E-02	2.66E-01	3.30E+03	1.62E+03
Te-131m	9.84E+01	6.01E+01	4.02E+01	7.25E+01	4.39E+02	2.38E+05	6.21E+05
Te-131	1.58E-02	8.32E-03	5.04E-03	1.24E-02	6.18E-02	2.34E+03	1.51E+01
Te-132	3.60E+02	2.90E+02	2.19E+02	2.46E+02	1.95E+03	4.49E+05	4.63E+05
I-130	6.24E+03	1.79E+04	7.17E+03	1.49E+06	2.75E+04	0.00E+00	9.12E+03
I-131	3.54E+04	4.91E+04	2.64E+04	1.46E+07	8.40E+04	0.00E+00	6.49E+03
I-132	1.59E+03	4.38E+03	1.58E+03	1.51E+05	6.92E+03	0.00E+00	1.27E+03
I-133	1.22E+04	2.05E+04	6.22E+03	2.92E+06	3.59E+04	0.00E+00	1.03E+04
I-134	8.88E+02	2.32E+03	8.40E+02	3.95E+04	3.66E+03	0.00E+00	2.04E+01
I-135	3.70E+03	9.44E+03	3.49E+03	6.21E+05	1.49E+04	0.00E+00	6.95E+03
Cs-134	5.02E+05	1.13E+06	5.49E+05	0.00E+00	3.75E+05	1.46E+05	9.76E+03
Cs-136	5.15E+04	1.94E+05	1.37E+05	0.00E+00	1.10E+05	1.78E+04	1.09E+04
Cs-137	6.70E+05	8.48E+05	3.11E+05	0.00E+00	3.04E+05	1.21E+05	8.48E+03
Cs-138	4.66E+02	8.56E+02	4.46E+02	0.00E+00	6.62E+02	7.87E+01	2.70E-01
Ba-139	1.34E+00	9.44E-04	3.90E-02	0.00E+00	8.88E-04	6.46E+03	6.45E+03
Ba-140	5.47E+04	6.70E+01	3.52E+03	0.00E+00	2.28E+01	2.03E+06	2.29E+05
Ba-141	1.42E-01	1.06E-04	4.74E-03	0.00E+00	9.84E-05	3.29E+03	7.46E-04
Ba-142	3.70E-02	3.70E-05	2.27E-03	0.00E+00	3.14E-05	1.91E+03	4.79E-10
La-140	4.79E+02	2.36E+02	6.26E+01	0.00E+00	0.00E+00	2.14E+05	4.87E+05
La-142	9.60E-01	4.25E-01	1.06E-01	0.00E+00	0.00E+00	1.02E+04	1.20E+04
Ce-141	2.84E+04	1.90E+04	2.17E+03	0.00E+00	8.88E+03	6.14E+05	1.26E+05
Ce-143	2.66E+02	1.94E+02	2.16E+01	0.00E+00	8.64E+01	1.30E+05	2.55E+05
Ce-144	4.89E+06	2.02E+06	2.62E+05	0.00E+00	1.21E+06	1.34E+07	8.64E+05
Pr-143	1.34E+04	5.31E+03	6.62E+02	0.00E+00	3.09E+03	4.83E+05	2.14E+05
Pr-144	4.30E-02	1.76E-02	2.18E-03	0.00E+00	1.01E-02	1.75E+03	2.35E-04
Nd-147	7.86E+03	8.56E+03	5.13E+02	0.00E+00	5.02E+03	3.72E+05	1.82E+05
W-187	1.20E+01	9.76E+00	3.43E+00	0.00E+00	0.00E+00	4.74E+04	1.77E+05
Np-239	3.38E+02	3.19E+01	1.77E+01	0.00E+00	1.00E+02	6.49E+04	1.32E+05
K-40	0.00E+00	0.00E+00	0.00E+00	0.00E+00	0.00E+00	0.00E+00	0.00E+00
Co-57	0.00E+00	9.44E+02	9.20E+02	0.00E+00	0.00E+00	5.86E+05	3.14E+04
Sr-85	4.00E+04	0.00E+00	1.04E+04	0.00E+00	0.00E+00	7.04E+05	5.52E+04
Y-88	0.00E+00	0.00E+00	0.00E+00	0.00E+00	0.00E+00	0.00E+00	0.00E+00
Nb-94	0.00E+00	0.00E+00	0.00E+00	0.00E+00	0.00E+00	0.00E+00	0.00E+00
Nb-97	3.14E-01	7.78E-02	2.84E-02	0.00E+00	9.12E-02	3.93E+03	2.17E+03
Cd-109	0.00E+00	8.00E+05	2.72E+04	0.00E+00	5.36E+05	1.28E+06	6.88E+04
Sn-113	1.20E+05	3.76E+03	7.76E+03	2.32E+03	0.00E+00	1.60E+06	1.20E+04
Ba-133	3.76E+05	6.40E+03	2.64E+04	0.00E+00	2.24E+01	2.32E+06	7.76E+04
Te-134	4.25E-02	3.48E-02	2.91E-02	3.57E-02	2.33E-01	5.40E+03	1.10E+01
Ce-139	0.00E+00	0.00E+00	0.00E+00	0.00E+00	0.00E+00	0.00E+00	0.00E+00
Hg-203	0.00E+00	0.00E+00	0.00E+00	0.00E+00	0.00E+00	0.00E+00	0.00E+00

Table 3-10c

CHILD INHALATION Ri(I) (mrem/yr per uCi/m^3)

Isotope	BONE	LIVER	TOT BODY	THYROID	KIDNEY	LUNG	GILLI
H-3	0.00E+00	1.12E+03	1.12E+03	1.12E+03	1.12E+03	1.12E+03	1.12E+03
Be-7	0.00E+00	0.00E+00	0.00E+00	0.00E+00	0.00E+00	0.00E+00	0.00E+00
Na-24	1.61E+04	1.61E+04	1.61E+04	1.61E+04	1.61E+04	1.61E+04	1.61E+04
P-32	2.60E+06	1.14E+05	9.88E+04	0.00E+00	0.00E+00	0.00E+00	4.22E+04
Cr-51	0.00E+00	0.00E+00	1.54E+02	8.55E+01	2.43E+01	1.70E+04	1.08E+03
Mn-54	0.00E+00	4.29E+04	9.51E+03	0.00E+00	1.00E+04	1.58E+06	2.29E+04
Mn-56	0.00E+00	1.66E+00	3.12E-01	0.00E+00	1.67E+00	1.31E+04	1.23E+05
Fe-55	4.74E+04	2.52E+04	7.77E+03	0.00E+00	0.00E+00	1.11E+05	2.87E+03
Fe-59	2.07E+04	3.34E+04	1.67E+04	0.00E+00	0.00E+00	1.27E+06	7.07E+04
Co-58	0.00E+00	1.77E+03	3.16E+03	0.00E+00	0.00E+00	1.11E+06	3.44E+04
Co-60	0.00E+00	1.31E+04	2.26E+04	0.00E+00	0.00E+00	7.07E+06	9.62E+04
Ni-63	8.21E+05	4.63E+04	2.80E+04	0.00E+00	0.00E+00	2.75E+05	6.33E+03
Ni-65	2.99E+00	2.96E-01	1.64E-01	0.00E+00	0.00E+00	8.18E+03	8.40E+04
Cu-64	0.00E+00	1.99E+00	1.07E+00	0.00E+00	6.03E+00	9.58E+03	3.67E+04
Zn-65	4.26E+04	1.13E+05	7.03E+04	0.00E+00	7.14E+04	9.95E+05	1.63E+04
Zn-69	6.70E-02	9.66E-02	8.92E-03	0.00E+00	5.85E-02	1.42E+03	1.02E+04
Br-83	0.00E+00	0.00E+00	4.74E+02	0.00E+00	0.00E+00	0.00E+00	0.00E+00
Br-84	0.00E+00	0.00E+00	5.48E+02	0.00E+00	0.00E+00	0.00E+00	0.00E+00
Br-85	0.00E+00	0.00E+00	2.53E+01	0.00E+00	0.00E+00	0.00E+00	0.00E+00
Rb-86	0.00E+00	1.98E+05	1.14E+05	0.00E+00	0.00E+00	0.00E+00	7.99E+03
Rb-88	0.00E+00	5.62E+02	3.66E+02	0.00E+00	0.00E+00	0.00E+00	1.72E+01
Rb-89	0.00E+00	3.45E+02	2.90E+02	0.00E+00	0.00E+00	0.00E+00	1.89E+00
Sr-89	5.99E+05	0.00E+00	1.72E+04	0.00E+00	0.00E+00	2.16E+06	1.67E+05
Sr-90	1.01E+08	0.00E+00	6.44E+06	0.00E+00	0.00E+00	1.48E+07	3.43E+05
Sr-91	1.21E+02	0.00E+00	4.59E+00	0.00E+00	0.00E+00	5.33E+04	1.74E+05
Sr-92	1.31E+01	0.00E+00	5.25E-01	0.00E+00	0.00E+00	2.40E+04	2.42E+05
Y-90	4.11E+03	0.00E+00	1.11E+02	0.00E+00	0.00E+00	2.62E+05	2.68E+05
Y-91m	5.07E-01	0.00E+00	1.84E-02	0.00E+00	0.00E+00	2.81E+03	1.72E+03
Y-91	9.14E+05	0.00E+00	2.44E+04	0.00E+00	0.00E+00	2.63E+06	1.84E+05
Y-92	2.04E+01	0.00E+00	5.81E-01	0.00E+00	0.00E+00	2.39E+04	2.39E+05
Y-93	1.86E+02	0.00E+00	5.11E+00	0.00E+00	0.00E+00	7.44E+04	3.89E+05
Zr-95	1.90E+05	4.18E+04	3.70E+04	0.00E+00	5.96E+04	2.23E+06	6.11E+04
Zr-97	1.88E+02	2.72E+01	1.60E+01	0.00E+00	3.88E+01	1.13E+05	3.51E+05
Nb-95	2.35E+04	9.18E+03	6.55E+03	0.00E+00	8.62E+03	6.14E+05	3.70E+04
Mo-99	0.00E+00	1.72E+02	4.25E+01	0.00E+00	3.92E+02	1.35E+05	1.27E+05
Tc-99m	1.78E-03	3.48E-03	5.77E-02	0.00E+00	5.07E-02	9.51E+02	4.81E+03
Tc-101	8.10E-05	8.51E-05	1.08E-03	0.00E+00	1.45E-03	5.85E+02	1.63E+01
Ru-103	2.79E+03	0.00E+00	1.07E+03	0.00E+00	7.03E+03	6.62E+05	4.48E+04
Ru-105	1.53E+00	0.00E+00	5.55E-01	0.00E+00	1.34E+00	1.59E+04	9.95E+04
Ru-106	1.36E+05	0.00E+00	1.69E+04	0.00E+00	1.84E+05	1.43E+07	4.29E+05
Ag-110m	1.69E+04	1.14E+04	9.14E+03	0.00E+00	2.12E+04	5.48E+06	1.00E+05
Sb-122	0.00E+00	0.00E+00	0.00E+00	0.00E+00	0.00E+00	0.00E+00	0.00E+00
Sb-124	5.74E+04	7.40E+02	2.00E+04	1.26E+02	0.00E+00	3.24E+06	1.64E+05
Sb-125	9.84E+04	7.59E+02	2.07E+04	9.10E+01	0.00E+00	2.32E+06	4.03E+04

Table 3-10c

CHILD INHALATION Ri(I) (mrem/yr per uCi/m^3)

Isotope	BONE	LIVER	TOT BODY	THYROID	KIDNEY	LUNG	GILLI
Te-125m	6.73E+03	2.33E+03	9.14E+02	1.92E+03	0.00E+00	4.77E+05	3.38E+04
Te-127m	2.49E+04	8.55E+03	3.02E+03	6.07E+03	6.36E+04	1.48E+06	7.14E+04
Te-127	2.77E+00	9.51E-01	6.10E-01	1.96E+00	7.07E+00	1.00E+04	5.62E+04
Te-129m	1.92E+04	6.85E+03	3.04E+03	6.33E+03	5.03E+04	1.76E+06	1.82E+05
Te-129	9.77E-02	3.50E-02	2.38E-02	7.14E-02	2.57E-01	2.93E+03	2.55E+04
Te-131m	1.34E+02	5.92E+01	5.07E+01	9.77E+01	4.00E+02	2.06E+05	3.08E+05
Te-131	2.17E-02	8.44E-03	6.59E-03	1.70E-02	5.88E-02	2.05E+03	1.33E+03
Te-132	4.81E+02	2.72E+02	2.63E+02	3.17E+02	1.77E+03	3.77E+05	1.38E+05
I-130	8.18E+03	1.64E+04	8.44E+03	1.85E+06	2.45E+04	0.00E+00	5.11E+03
I-131	4.81E+04	4.81E+04	2.73E+04	1.62E+07	7.88E+04	0.00E+00	2.84E+03
I-132	2.12E+03	4.07E+03	1.88E+03	1.94E+05	6.25E+03	0.00E+00	3.20E+03
I-133	1.66E+04	2.03E+04	7.70E+03	3.85E+06	3.38E+04	0.00E+00	5.48E+03
I-134	1.17E+03	2.16E+03	9.95E+02	5.07E+04	3.30E+03	0.00E+00	9.55E+02
I-135	4.92E+03	8.73E+03	4.14E+03	7.92E+05	1.34E+04	0.00E+00	4.44E+03
Cs-134	6.51E+05	1.01E+06	2.25E+05	0.00E+00	3.30E+05	1.21E+05	3.85E+03
Cs-136	6.51E+04	1.71E+05	1.16E+05	0.00E+00	9.55E+04	1.45E+04	4.18E+03
Cs-137	9.07E+05	8.25E+05	1.28E+05	0.00E+00	2.82E+05	1.04E+05	3.62E+03
Cs-138	6.33E+02	8.40E+02	5.55E+02	0.00E+00	6.22E+02	6.81E+01	2.70E+02
Ba-139	1.84E+00	9.84E-04	5.36E-02	0.00E+00	8.62E-04	5.77E+03	5.77E+04
Ba-140	7.40E+04	6.48E+01	4.33E+03	0.00E+00	2.11E+01	1.74E+06	1.02E+05
Ba-141	1.96E-01	1.09E-04	6.36E-03	0.00E+00	9.47E-05	2.92E+03	2.75E+02
Ba-142	4.99E-02	3.60E-05	2.79E-03	0.00E+00	2.91E-05	1.64E+03	2.74E+00
La-140	6.44E+02	2.25E+02	7.55E+01	0.00E+00	0.00E+00	1.83E+05	2.26E+05
La-142	1.29E+00	4.11E-01	1.29E-01	0.00E+00	0.00E+00	8.70E+03	7.59E+04
Ce-141	3.92E+04	1.95E+04	2.90E+03	0.00E+00	8.55E+03	5.44E+05	5.66E+04
Ce-143	3.66E+02	1.99E+02	2.87E+01	0.00E+00	8.36E+01	1.15E+05	1.27E+05
Ce-144	6.77E+06	2.12E+06	3.61E+05	0.00E+00	1.17E+06	1.20E+07	3.89E+05
Pr-143	1.85E+04	5.55E+03	9.14E+02	0.00E+00	3.00E+03	4.33E+05	9.73E+04
Pr-144	5.96E-02	1.85E-02	3.00E-03	0.00E+00	9.77E-03	1.57E+03	1.97E+02
Nd-147	1.08E+04	8.73E+03	6.81E+02	0.00E+00	4.81E+03	3.28E+05	8.21E+04
W-187	1.63E+01	9.66E+00	4.33E+00	0.00E+00	0.00E+00	4.11E+04	9.10E+04
Np-239	4.66E+02	3.34E+01	2.35E+01	0.00E+00	9.73E+01	5.81E+04	6.40E+04
K-40	0.00E+00	0.00E+00	0.00E+00	0.00E+00	0.00E+00	0.00E+00	0.00E+00
Co-57	0.00E+00	9.03E+02	1.07E+03	0.00E+00	0.00E+00	5.07E+05	1.32E+04
Sr-85	4.44E+04	0.00E+00	1.18E+04	0.00E+00	0.00E+00	5.55E+05	2.04E+04
Y-88	0.00E+00	0.00E+00	0.00E+00	0.00E+00	0.00E+00	0.00E+00	0.00E+00
Nb-94	0.00E+00	0.00E+00	0.00E+00	0.00E+00	0.00E+00	0.00E+00	0.00E+00
Nb-97	4.29E-01	7.70E-02	3.60E-02	0.00E+00	8.55E-02	3.42E+03	2.78E+04
Cd-109	0.00E+00	7.03E+05	2.96E+04	0.00E+00	6.29E+05	1.11E+06	3.00E+04
Sn-113	1.41E+05	3.29E+03	8.51E+03	2.63E+03	0.00E+00	1.33E+06	4.81E+03
Ba-133	4.07E+05	4.07E+03	3.70E+04	0.00E+00	2.00E+01	1.92E+06	3.07E+04
Te-134	5.66E-02	3.26E-02	3.48E-02	4.59E-02	2.11E-01	4.55E+03	1.80E+03
Ce-139	0.00E+00	0.00E+00	0.00E+00	0.00E+00	0.00E+00	0.00E+00	0.00E+00
Hg-203	0.00E+00	0.00E+00	0.00E+00	0.00E+00	0.00E+00	0.00E+00	0.00E+00

Table 3-10d

INFANT INHALATION Ri(I) (mrem/yr per uCi/m^3)

Isotope	BONE	LIVER	TOT BODY	THYROID	KIDNEY	LUNG	GILLI
H-3	0.00E+00	6.47E+02	6.47E+02	6.47E+02	6.47E+02	6.47E+02	6.47E+02
Be-7	0.00E+00	0.00E+00	0.00E+00	0.00E+00	0.00E+00	0.00E+00	0.00E+00
Na-24	1.06E+04	1.06E+04	1.06E+04	1.06E+04	1.06E+04	1.06E+04	1.06E+04
P-32	2.03E+06	1.12E+05	7.74E+04	0.00E+00	0.00E+00	0.00E+00	1.61E+04
Cr-51	0.00E+00	0.00E+00	8.95E+01	5.75E+01	1.32E+01	1.28E+04	3.57E+02
Mn-54	0.00E+00	2.53E+04	4.98E+03	0.00E+00	4.98E+03	1.00E+06	7.06E+03
Mn-56	0.00E+00	1.54E+00	2.21E-01	0.00E+00	1.10E+00	1.25E+04	7.17E+04
Fe-55	1.97E+04	1.17E+04	3.33E+03	0.00E+00	0.00E+00	8.69E+04	1.09E+03
Fe-59	1.36E+04	2.35E+04	9.48E+03	0.00E+00	0.00E+00	1.02E+06	2.48E+04
Co-58	0.00E+00	1.22E+03	1.82E+03	0.00E+00	0.00E+00	7.77E+05	1.11E+04
Co-60	0.00E+00	8.02E+03	1.18E+04	0.00E+00	0.00E+00	4.51E+06	3.19E+04
Ni-63	3.39E+05	2.04E+04	1.16E+04	0.00E+00	0.00E+00	2.09E+05	2.42E+03
Ni-65	2.39E+00	2.84E-01	1.23E-01	0.00E+00	0.00E+00	8.12E+03	5.01E+04
Cu-64	0.00E+00	1.88E+00	7.74E-01	0.00E+00	3.98E+00	9.30E+03	1.50E+04
Zn-65	1.93E+04	6.26E+04	3.11E+04	0.00E+00	3.25E+04	6.47E+05	5.14E+04
Zn-69	5.39E-02	9.67E-02	7.18E-03	0.00E+00	4.02E-02	1.47E+03	1.32E+04
Br-83	0.00E+00	0.00E+00	3.81E+02	0.00E+00	0.00E+00	0.00E+00	0.00E+00
Br-84	0.00E+00	0.00E+00	4.00E+02	0.00E+00	0.00E+00	0.00E+00	0.00E+00
Br-85	0.00E+00	0.00E+00	2.04E+01	0.00E+00	0.00E+00	0.00E+00	0.00E+00
Rb-86	0.00E+00	1.90E+05	8.82E+04	0.00E+00	0.00E+00	0.00E+00	3.04E+03
Rb-88	0.00E+00	5.57E+02	2.87E+02	0.00E+00	0.00E+00	0.00E+00	3.39E+02
Rb-89	0.00E+00	3.21E+02	2.06E+02	0.00E+00	0.00E+00	0.00E+00	6.82E+01
Sr-89	3.98E+05	0.00E+00	1.14E+04	0.00E+00	0.00E+00	2.03E+06	6.40E+04
Sr-90	4.09E+07	0.00E+00	2.59E+06	0.00E+00	0.00E+00	1.12E+07	1.31E+05
Sr-91	9.56E+01	0.00E+00	3.46E+00	0.00E+00	0.00E+00	5.26E+04	7.34E+04
Sr-92	1.05E+01	0.00E+00	3.91E-01	0.00E+00	0.00E+00	2.38E+04	1.40E+05
Y-90	3.29E+03	0.00E+00	8.82E+01	0.00E+00	0.00E+00	2.69E+05	1.04E+05
Y-91m	4.07E-01	0.00E+00	1.39E-02	0.00E+00	0.00E+00	2.79E+03	2.35E+03
Y-91	5.88E+05	0.00E+00	1.57E+04	0.00E+00	0.00E+00	2.45E+06	7.03E+04
Y-92	1.64E+01	0.00E+00	4.61E-01	0.00E+00	0.00E+00	2.45E+04	1.27E+05
Y-93	1.50E+02	0.00E+00	4.07E+00	0.00E+00	0.00E+00	7.64E+04	1.67E+05
Zr-95	1.15E+05	2.79E+04	2.03E+04	0.00E+00	3.11E+04	1.75E+06	2.17E+04
Zr-97	1.50E+02	2.56E+01	1.17E+01	0.00E+00	2.59E+01	1.10E+05	1.40E+05
Nb-95	1.57E+04	6.43E+03	3.78E+03	0.00E+00	4.72E+03	4.79E+05	1.27E+04
Mo-99	0.00E+00	1.65E+02	3.23E+01	0.00E+00	2.65E+02	1.35E+05	4.87E+04
Tc-99m	1.40E-03	2.88E-03	3.72E-02	0.00E+00	3.11E-02	8.11E+02	2.03E+03
Tc-101	6.51E-05	8.23E-05	8.12E-04	0.00E+00	9.79E-04	5.84E+02	8.44E+02
Ru-103	2.02E+03	0.00E+00	6.79E+02	0.00E+00	4.24E+03	5.52E+05	1.61E+04
Ru-105	1.22E+00	0.00E+00	4.10E-01	0.00E+00	8.99E-01	1.57E+04	4.84E+04
Ru-106	8.68E+04	0.00E+00	1.09E+04	0.00E+00	1.07E+05	1.16E+07	1.64E+05
Ag-110m	9.98E+03	7.22E+03	5.00E+03	0.00E+00	1.09E+04	3.67E+06	3.30E+04
Sb-122	0.00E+00	0.00E+00	0.00E+00	0.00E+00	0.00E+00	0.00E+00	0.00E+00
Sb-124	3.79E+04	5.56E+02	1.20E+04	1.01E+02	0.00E+00	2.65E+06	5.91E+04
Sb-125	5.17E+04	4.77E+02	1.09E+04	6.23E+01	0.00E+00	1.64E+06	1.47E+04

Table 3-10d

INFANT INHALATION Ri(I) (mrem/yr per uCi/m^3)

Isotope	BONE	LIVER	TOT BODY	THYROID	KIDNEY	LUNG	GILLI
Te-125m	4.76E+03	1.99E+03	6.58E+02	1.62E+03	0.00E+00	4.47E+05	1.29E+04
Te-127m	1.67E+04	6.90E+03	2.07E+03	4.87E+03	3.75E+04	1.31E+06	2.73E+04
Te-127	2.23E+04	9.53E-01	4.89E-01	1.85E+00	4.86E+00	1.03E+04	2.44E+04
Te-129m	1.41E+04	6.09E+03	2.23E+03	5.47E+03	3.18E+04	1.68E+06	6.90E+04
Te-129	7.88E-02	3.47E-02	1.88E-02	6.75E-02	1.75E-01	3.00E+03	2.63E+04
Te-131m	1.07E+02	5.50E+01	3.63E+01	8.93E+01	2.65E+02	1.99E+05	1.19E+05
Te-131	1.74E-02	8.22E-03	5.00E-03	1.58E-02	3.99E-02	2.06E+03	8.22E+03
Te-132	3.72E+02	2.37E+02	1.76E+02	2.79E+02	1.03E+03	3.40E+05	4.41E+04
I-130	6.36E+03	1.39E+04	5.57E+03	1.60E+06	1.53E+04	0.00E+00	1.99E+03
I-131	3.79E+04	4.44E+04	1.96E+04	1.48E+07	5.18E+04	0.00E+00	1.06E+03
I-132	1.69E+03	3.54E+03	1.26E+03	1.69E+05	3.95E+03	0.00E+00	1.90E+03
I-133	1.32E+04	1.92E+04	5.60E+03	3.56E+06	2.24E+04	0.00E+00	2.16E+03
I-134	9.21E+02	1.88E+03	6.65E+02	4.45E+04	2.09E+03	0.00E+00	1.29E+03
I-135	3.86E+03	7.60E+03	2.77E+03	6.96E+05	8.47E+03	0.00E+00	1.83E+03
Cs-134	3.96E+05	7.03E+05	7.45E+04	0.00E+00	1.90E+05	7.97E+04	1.33E+03
Cs-136	4.83E+04	1.35E+05	5.29E+04	0.00E+00	5.64E+04	1.18E+04	1.43E+03
Cs-137	5.49E+05	6.12E+05	4.55E+04	0.00E+00	1.72E+05	7.13E+04	1.33E+03
Cs-138	5.05E+02	7.81E+02	3.98E+02	0.00E+00	4.10E+02	6.54E+01	8.76E+02
Ba-139	1.48E+00	9.84E-04	4.30E-02	0.00E+00	5.92E-04	5.95E+03	5.10E+04
Ba-140	5.60E+04	5.60E+01	2.90E+03	0.00E+00	1.34E+01	1.60E+06	3.84E+04
Ba-141	1.57E-01	1.08E-04	4.97E-03	0.00E+00	6.50E-05	2.97E+03	4.75E+03
Ba-142	3.98E-02	3.30E-05	1.96E-03	0.00E+00	1.90E-05	1.55E+03	6.93E+02
La-140	5.05E+02	2.00E+02	5.15E+01	0.00E+00	0.00E+00	1.68E+05	8.48E+04
La-142	1.03E+00	3.77E-01	9.04E-02	0.00E+00	0.00E+00	8.22E+03	5.95E+04
Ce-141	2.77E+04	1.67E+04	1.99E+03	0.00E+00	5.25E+03	5.17E+05	2.16E+04
Ce-143	2.93E+02	1.93E+02	2.21E+01	0.00E+00	5.64E+01	1.16E+05	4.97E+04
Ce-144	3.19E+06	1.21E+06	1.76E+05	0.00E+00	5.38E+05	9.84E+06	1.48E+05
Pr-143	1.40E+04	5.24E+03	6.99E+02	0.00E+00	1.97E+03	4.33E+05	3.72E+04
Pr-144	4.79E-02	1.85E-02	2.41E-03	0.00E+00	6.72E-03	1.61E+03	4.28E+03
Nd-147	7.94E+03	8.13E+03	5.00E+02	0.00E+00	3.15E+03	3.22E+05	3.12E+04
W-187	1.30E+01	9.02E+00	3.12E+00	0.00E+00	0.00E+00	3.96E+04	3.56E+04
Np-239	3.71E+02	3.32E+01	1.88E+01	0.00E+00	6.62E+01	5.95E+04	2.49E+04
K-40	0.00E+00	0.00E+00	0.00E+00	0.00E+00	0.00E+00	0.00E+00	0.00E+00
Co-57	0.00E+00	6.51E+02	6.41E+02	0.00E+00	0.00E+00	3.79E+05	4.86E+03
Sr-85	3.78E+04	0.00E+00	7.56E+03	0.00E+00	0.00E+00	4.20E+05	6.72E+03
Y-88	0.00E+00	0.00E+00	0.00E+00	0.00E+00	0.00E+00	0.00E+00	0.00E+00
Nb-94	0.00E+00	0.00E+00	0.00E+00	0.00E+00	0.00E+00	0.00E+00	0.00E+00
Nb-97	3.42E-01	7.29E-02	2.63E-02	0.00E+00	5.70E-02	3.32E+03	2.69E+04
Cd-109	0.00E+00	3.64E+05	1.40E+04	0.00E+00	2.80E+05	8.68E+05	1.12E+04
Sn-113	8.40E+04	2.24E+03	5.04E+03	1.82E+03	0.00E+00	1.09E+06	1.68E+03
Ba-133	2.66E+05	2.38E+03	1.82E+04	0.00E+00	1.25E+01	1.27E+06	1.08E+04
Te-134	4.45E-02	2.86E-02	2.35E-02	4.07E-02	1.34E-01	4.10E+03	3.54E+03
Ce-139	0.00E+00	0.00E+00	0.00E+00	0.00E+00	0.00E+00	0.00E+00	0.00E+00
Hg-203	0.00E+00	0.00E+00	0.00E+00	0.00E+00	0.00E+00	0.00E+00	0.00E+00

Table 3-11a

ADULT INGESTION (Leafy Vegetable) Ri(V)

m^2 * mrem/yr per uCi/sec (H-3: mrem/yr per uCi/m^3)

Isotope	BONE	LIVER	TOT BODY	THYROID	KIDNEY	LUNG	GILLI
H-3	0.00E+00	2.26E+03	2.26E+03	2.26E+03	2.26E+03	2.26E+03	2.26E+03
Be-7	9.36E+04	2.11E+05	1.05E+05	0.00E+00	2.22E+05	0.00E+00	3.65E+07
Na-24	2.69E+05	2.69E+05	2.69E+05	2.69E+05	2.69E+05	2.69E+05	2.69E+05
P-32	1.40E+09	8.73E+07	5.43E+07	0.00E+00	0.00E+00	0.00E+00	1.58E+08
Cr-51	0.00E+00	0.00E+00	4.64E+04	2.78E+04	1.02E+04	6.16E+04	1.17E+07
Mn-54	0.00E+00	3.13E+08	5.97E+07	0.00E+00	9.31E+07	0.00E+00	9.58E+08
Mn-56	0.00E+00	1.59E+01	2.82E+00	0.00E+00	2.02E+01	0.00E+00	5.07E+02
Fe-55	2.10E+08	1.45E+08	3.38E+07	0.00E+00	0.00E+00	8.08E+07	8.31E+07
Fe-59	1.26E+08	2.96E+08	1.13E+08	0.00E+00	0.00E+00	8.27E+07	9.86E+08
Co-58	0.00E+00	3.07E+07	6.89E+07	0.00E+00	0.00E+00	0.00E+00	6.23E+08
Co-60	0.00E+00	1.67E+08	3.69E+08	0.00E+00	0.00E+00	0.00E+00	3.14E+09
Ni-63	1.04E+10	7.21E+08	3.49E+08	0.00E+00	0.00E+00	0.00E+00	1.50E+08
Ni-65	6.15E+01	7.99E+00	3.64E+00	0.00E+00	0.00E+00	0.00E+00	2.03E+02
Cu-64	0.00E+00	9.20E+03	4.32E+03	0.00E+00	2.32E+04	0.00E+00	7.84E+05
Zn-65	3.17E+08	1.01E+09	4.56E+08	0.00E+00	6.75E+08	0.00E+00	6.36E+08
Zn-69	8.73E-06	1.67E-05	1.16E-06	0.00E+00	1.09E-05	0.00E+00	2.51E-06
Br-83	0.00E+00	0.00E+00	3.11E+00	0.00E+00	0.00E+00	0.00E+00	4.47E+00
Br-84	0.00E+00	0.00E+00	2.48E-11	0.00E+00	0.00E+00	0.00E+00	1.94E-16
Br-85	0.00E+00	0.00E+00	0.00E+00	0.00E+00	0.00E+00	0.00E+00	0.00E+00
Rb-86	0.00E+00	2.19E+08	1.02E+08	0.00E+00	0.00E+00	0.00E+00	4.33E+07
Rb-88	0.00E+00	3.43E-22	1.82E-22	0.00E+00	0.00E+00	0.00E+00	4.74E-33
Rb-89	0.00E+00	1.39E-26	9.74E-27	0.00E+00	0.00E+00	0.00E+00	8.05E-40
Sr-89	9.96E+09	0.00E+00	2.86E+08	0.00E+00	0.00E+00	0.00E+00	1.60E+09
Sr-90	6.05E+11	0.00E+00	1.48E+11	0.00E+00	0.00E+00	0.00E+00	1.75E+10
Sr-91	3.05E+05	0.00E+00	1.23E+04	0.00E+00	0.00E+00	0.00E+00	1.45E+06
Sr-92	4.27E+02	0.00E+00	1.85E+01	0.00E+00	0.00E+00	0.00E+00	8.45E+03
Y-90	1.33E+04	0.00E+00	3.56E+02	0.00E+00	0.00E+00	0.00E+00	1.41E+08
Y-91m	5.22E-09	0.00E+00	2.02E-10	0.00E+00	0.00E+00	0.00E+00	1.53E-08
Y-91	5.11E+06	0.00E+00	1.37E+05	0.00E+00	0.00E+00	0.00E+00	2.81E+09
Y-92	9.15E-01	0.00E+00	2.68E-02	0.00E+00	0.00E+00	0.00E+00	1.60E+04
Y-93	1.70E+02	0.00E+00	4.68E+00	0.00E+00	0.00E+00	0.00E+00	5.38E+06
Zr-95	1.17E+06	3.77E+05	2.55E+05	0.00E+00	5.91E+05	0.00E+00	1.19E+09
Zr-97	3.37E+02	6.81E+01	3.11E+01	0.00E+00	1.03E+02	0.00E+00	2.11E+07
Nb-95	1.43E+05	7.94E+04	4.27E+04	0.00E+00	7.85E+04	0.00E+00	4.82E+08
Mo-99	0.00E+00	6.15E+06	1.17E+06	0.00E+00	1.39E+07	0.00E+00	1.43E+07
Tc-99m	3.10E+00	8.77E+00	1.12E+02	0.00E+00	1.33E+02	4.30E+00	5.19E+03
Tc-101	8.22E-31	1.18E-30	1.16E-29	0.00E+00	2.13E-29	6.05E-31	3.56E-42
Ru-103	4.76E+06	0.00E+00	2.05E+06	0.00E+00	1.82E+07	0.00E+00	5.56E+08
Ru-105	5.39E+01	0.00E+00	2.13E+01	0.00E+00	6.96E+02	0.00E+00	3.29E+04
Ru-106	1.93E+08	0.00E+00	2.44E+07	0.00E+00	3.72E+08	0.00E+00	1.25E+10
Ag-110m	1.05E+07	9.75E+06	5.79E+06	0.00E+00	1.92E+07	0.00E+00	3.98E+09
Sb-122	2.80E+05	6.43E+03	9.65E+04	4.34E+03	0.00E+00	1.68E+05	1.06E+08
Sb-124	1.04E+08	1.96E+06	4.07E+07	2.52E+05	0.00E+00	8.07E+07	2.94E+09
Sb-125	1.37E+08	1.53E+06	3.25E+07	1.39E+05	0.00E+00	1.05E+08	1.50E+09

Table 3-11a

ADULT INGESTION (Leafy Vegetable) Ri(V)

m^2 * mrem/yr per uCi/sec (H-3: mrem/yr per uCi/m^3)

Isotope	BONE	LIVER	TOT BODY	THYROID	KIDNEY	LUNG	GILLI
Te-125m	9.66E+07	3.50E+07	1.29E+07	2.90E+07	3.93E+08	0.00E+00	3.86E+08
Te-127m	3.49E+08	1.25E+08	4.26E+07	8.92E+07	1.42E+09	0.00E+00	1.17E+09
Te-127	5.66E+03	2.03E+03	1.22E+03	4.19E+03	2.31E+04	0.00E+00	4.47E+05
Te-129m	2.51E+08	9.38E+07	3.98E+07	8.63E+07	1.05E+09	0.00E+00	1.27E+09
Te-129	7.62E-04	2.87E-04	1.86E-04	5.85E-04	3.20E-03	0.00E+00	5.75E-04
Te-131m	9.12E+05	4.46E+05	3.72E+05	7.06E+05	4.52E+06	0.00E+00	4.43E+07
Te-131	1.50E-15	6.27E-16	4.74E-16	1.23E-15	6.57E-15	0.00E+00	2.13E-16
Te-132	4.30E+06	2.78E+06	2.61E+06	3.07E+06	2.68E+07	0.00E+00	1.32E+08
I-130	3.92E+05	1.16E+06	4.57E+05	9.81E+07	1.81E+06	0.00E+00	9.96E+05
I-131	8.08E+07	1.16E+08	6.62E+07	3.79E+10	1.98E+08	0.00E+00	3.05E+07
I-132	5.76E+01	1.54E+02	5.39E+01	5.39E+03	2.45E+02	0.00E+00	2.89E+01
I-133	2.09E+06	3.63E+06	1.11E+06	5.33E+08	6.33E+06	0.00E+00	3.26E+06
I-134	9.65E-05	2.62E-04	9.38E-05	4.54E-03	4.17E-04	0.00E+00	2.29E-07
I-135	3.90E+04	1.02E+05	3.77E+04	6.73E+06	1.64E+05	0.00E+00	1.15E+05
Cs-134	4.67E+09	1.11E+10	9.08E+09	0.00E+00	3.59E+09	1.19E+09	1.94E+08
Cs-136	4.24E+07	1.68E+08	1.21E+08	0.00E+00	9.32E+07	1.28E+07	1.90E+07
Cs-137	6.36E+09	8.70E+09	5.70E+09	0.00E+00	2.95E+09	9.81E+08	1.68E+08
Cs-138	3.91E-11	7.73E-11	3.83E-11	0.00E+00	5.68E-11	5.61E-12	3.30E-16
Ba-139	2.68E-02	1.91E-05	7.86E-04	0.00E+00	1.79E-05	1.08E-05	4.76E-02
Ba-140	1.28E+08	1.61E+05	8.38E+06	0.00E+00	5.46E+04	9.20E+04	2.63E+08
Ba-141	1.15E-21	8.70E-25	3.89E-23	0.00E+00	8.09E-25	4.94E-25	5.43E-31
Ba-142	2.46E-39	2.53E-42	1.55E-40	0.00E+00	2.14E-42	1.43E-42	0.00E+00
La-140	1.98E+03	9.98E+02	2.64E+02	0.00E+00	0.00E+00	0.00E+00	7.33E+07
La-142	1.41E-04	6.43E-05	1.60E-05	0.00E+00	0.00E+00	0.00E+00	4.69E-01
Ce-141	1.97E+05	1.33E+05	1.51E+04	0.00E+00	6.19E+04	0.00E+00	5.10E+08
Ce-143	9.98E+02	7.38E+05	8.16E+01	0.00E+00	3.25E+02	0.00E+00	2.76E+07
Ce-144	3.29E+07	1.38E+07	1.77E+06	0.00E+00	8.16E+06	0.00E+00	1.11E+10
Pr-143	6.26E+04	2.51E+04	3.10E+03	0.00E+00	1.45E+04	0.00E+00	2.74E+08
Pr-144	3.09E-26	1.28E-26	1.57E-27	0.00E+00	7.23E-27	0.00E+00	4.44E-33
Nd-147	3.33E+04	3.85E+04	2.31E+03	0.00E+00	2.25E+04	0.00E+00	1.85E+08
W-187	3.82E+04	3.19E+04	1.12E+04	0.00E+00	0.00E+00	0.00E+00	1.05E+07
Np-239	1.43E+03	1.41E+02	7.76E+01	0.00E+00	4.39E+02	0.00E+00	2.89E+07
K-40	0.00E+00	0.00E+00	0.00E+00	0.00E+00	0.00E+00	0.00E+00	0.00E+00
Co-57	0.00E+00	1.17E+07	1.95E+07	0.00E+00	0.00E+00	0.00E+00	2.97E+08
Sr-85	0.00E+00	0.00E+00	0.00E+00	0.00E+00	0.00E+00	0.00E+00	0.00E+00
Y-88	0.00E+00	0.00E+00	0.00E+00	0.00E+00	0.00E+00	0.00E+00	0.00E+00
Nb-94	0.00E+00	0.00E+00	0.00E+00	0.00E+00	0.00E+00	0.00E+00	0.00E+00
Nb-97	2.15E-06	5.45E-07	1.99E-07	0.00E+00	6.35E-07	0.00E+00	2.01E-03
Cd-109	0.00E+00	0.00E+00	0.00E+00	0.00E+00	0.00E+00	0.00E+00	0.00E+00
Sn-113	0.00E+00	0.00E+00	0.00E+00	0.00E+00	0.00E+00	0.00E+00	0.00E+00
Ba-133	0.00E+00	0.00E+00	0.00E+00	0.00E+00	0.00E+00	0.00E+00	0.00E+00
Te-134	3.56E-08	2.33E-08	1.43E-08	3.11E-08	2.25E-07	0.00E+00	3.95E-11
Ce-139	0.00E+00	0.00E+00	0.00E+00	0.00E+00	0.00E+00	0.00E+00	0.00E+00
Hg-203	0.00E+00	0.00E+00	0.00E+00	0.00E+00	0.00E+00	0.00E+00	0.00E+00

Table 3-11b

TEEN INGESTION (Leafy Vegetable) Ri(V)

m^2 * mrem/yr per uCi/sec (H-3: mrem/yr per uCi/m^3)

Isotope	BONE	LIVER	TOT BODY	THYROID	KIDNEY	LUNG	GILLI
H-3	0.00E+00	2.59E+03	2.59E+03	2.59E+03	2.59E+03	2.59E+03	2.59E+03
Be-7	1.43E+05	3.20E+05	1.60E+05	0.00E+00	3.39E+05	0.00E+00	3.90E+07
Na-24	2.39E+05	2.39E+05	2.39E+05	2.39E+05	2.39E+05	2.39E+05	2.39E+05
P-32	1.61E+09	9.97E+07	6.24E+07	0.00E+00	0.00E+00	0.00E+00	1.35E+08
Cr-51	0.00E+00	0.00E+00	6.17E+04	3.43E+04	1.35E+04	8.81E+04	1.04E+07
Mn-54	0.00E+00	4.54E+08	9.01E+07	0.00E+00	1.36E+08	0.00E+00	9.32E+08
Mn-56	0.00E+00	1.43E+01	2.55E+00	0.00E+00	1.81E+01	0.00E+00	9.44E+02
Fe-55	3.26E+08	2.31E+08	5.39E+07	0.00E+00	0.00E+00	1.47E+08	1.00E+08
Fe-59	1.79E+08	4.18E+08	1.61E+08	0.00E+00	0.00E+00	1.32E+08	9.88E+08
Co-58	0.00E+00	4.36E+07	1.00E+08	0.00E+00	0.00E+00	0.00E+00	6.01E+08
Co-60	0.00E+00	2.49E+08	5.60E+08	0.00E+00	0.00E+00	0.00E+00	3.24E+09
Ni-63	1.61E+10	1.13E+09	5.45E+08	0.00E+00	0.00E+00	0.00E+00	1.81E+08
Ni-65	5.72E+01	7.31E+00	3.33E+00	0.00E+00	0.00E+00	0.00E+00	3.97E+02
Cu-64	0.00E+00	8.34E+03	3.92E+03	0.00E+00	2.11E+04	0.00E+00	6.47E+05
Zn-65	4.24E+08	1.47E+09	6.86E+08	0.00E+00	9.42E+08	0.00E+00	6.23E+08
Zn-69	8.18E-06	1.56E-05	1.09E-06	0.00E+00	1.02E-05	0.00E+00	2.87E-05
Br-83	0.00E+00	0.00E+00	2.91E+00	0.00E+00	0.00E+00	0.00E+00	0.00E+00
Br-84	0.00E+00	0.00E+00	2.25E-11	0.00E+00	0.00E+00	0.00E+00	0.00E+00
Br-85	0.00E+00	0.00E+00	0.00E+00	0.00E+00	0.00E+00	0.00E+00	0.00E+00
Rb-86	0.00E+00	2.74E+08	1.29E+08	0.00E+00	0.00E+00	0.00E+00	4.05E+07
Rb-88	0.00E+00	3.17E-22	1.69E-22	0.00E+00	0.00E+00	0.00E+00	2.71E-29
Rb-89	0.00E+00	1.25E-26	8.82E-27	0.00E+00	0.00E+00	0.00E+00	1.91E-35
Sr-89	1.51E+10	0.00E+00	4.33E+08	0.00E+00	0.00E+00	0.00E+00	1.80E+09
Sr-90	7.51E+11	0.00E+00	1.85E+11	0.00E+00	0.00E+00	0.00E+00	2.11E+10
Sr-91	2.85E+05	0.00E+00	1.13E+04	0.00E+00	0.00E+00	0.00E+00	1.29E+06
Sr-92	3.97E+02	0.00E+00	1.69E+01	0.00E+00	0.00E+00	0.00E+00	1.01E+04
Y-90	1.24E+04	0.00E+00	3.34E+02	0.00E+00	0.00E+00	0.00E+00	1.02E+08
Y-91m	4.86E-09	0.00E+00	1.86E-10	0.00E+00	0.00E+00	0.00E+00	2.29E-07
Y-91	7.84E+06	0.00E+00	2.10E+05	0.00E+00	0.00E+00	0.00E+00	3.21E+09
Y-92	8.60E-01	0.00E+00	2.49E-02	0.00E+00	0.00E+00	0.00E+00	2.36E+04
Y-93	1.59E+02	0.00E+00	4.36E+00	0.00E+00	0.00E+00	0.00E+00	4.86E+06
Zr-95	1.72E+06	5.43E+05	3.73E+05	0.00E+00	7.98E+05	0.00E+00	1.25E+09
Zr-97	3.12E+02	6.18E+01	2.85E+01	0.00E+00	9.37E+01	0.00E+00	1.67E+07
Nb-95	1.93E+05	1.07E+05	5.89E+04	0.00E+00	1.04E+05	0.00E+00	4.57E+08
Mo-99	0.00E+00	5.65E+06	1.08E+06	0.00E+00	1.29E+07	0.00E+00	1.01E+07
Tc-99m	2.74E+00	7.63E+00	9.89E+01	0.00E+00	1.14E+02	4.24E+00	5.01E+03
Tc-101	7.64E-31	1.09E-30	1.07E-29	0.00E+00	1.97E-29	6.62E-31	1.86E-37
Ru-103	6.81E+06	0.00E+00	2.91E+06	0.00E+00	2.40E+07	0.00E+00	5.69E+08
Ru-105	5.00E+01	0.00E+00	1.94E+01	0.00E+00	6.31E+02	0.00E+00	4.04E+04
Ru-106	3.10E+08	0.00E+00	3.90E+07	0.00E+00	5.97E+08	0.00E+00	1.48E+10
Ag-110m	1.52E+07	1.43E+07	8.72E+06	0.00E+00	2.74E+07	0.00E+00	4.03E+09
Sb-122	3.03E+05	5.89E+03	8.85E+04	3.85E+03	0.00E+00	1.89E+05	6.35E+07
Sb-124	1.54E+08	2.84E+06	6.02E+07	3.50E+05	0.00E+00	1.34E+08	3.11E+09
Sb-125	2.14E+08	2.34E+06	5.00E+07	2.04E+05	0.00E+00	1.86E+08	1.66E+09

Table 3-11b

TEEN INGESTION (Leafy Vegetable) Ri(V)

m^2 * mrem/yr per uCi/sec (H-3: mrem/yr per uCi/m^3)

Isotope	BONE	LIVER	TOT BODY	THYROID	KIDNEY	LUNG	GILLI
Te-125m	1.48E+08	5.34E+07	1.98E+07	4.14E+07	0.00E+00	0.00E+00	4.37E+08
Te-127m	5.51E+08	1.96E+08	6.56E+07	1.31E+08	2.24E+09	0.00E+00	1.37E+09
Te-127	5.34E+03	1.89E+03	1.15E+03	3.68E+03	2.16E+04	0.00E+00	4.12E+05
Te-129m	3.62E+08	1.34E+08	5.73E+07	1.17E+08	1.51E+09	0.00E+00	1.36E+09
Te-129	7.14E-04	2.66E-04	1.74E-04	5.10E-04	3.00E-03	0.00E+00	3.90E-03
Te-131m	8.44E+05	4.05E+05	3.38E+05	6.09E+05	4.22E+06	0.00E+00	3.25E+07
Te-131	1.39E-15	5.75E-16	4.36E-16	1.07E-15	6.10E-15	0.00E+00	1.14E-16
Te-132	3.91E+06	2.47E+06	2.33E+06	2.61E+06	2.37E+07	0.00E+00	7.84E+07
I-130	3.51E+05	1.01E+06	4.05E+05	8.28E+07	1.56E+06	0.00E+00	7.80E+05
I-131	7.69E+07	1.08E+08	5.78E+07	3.14E+10	1.85E+08	0.00E+00	2.13E+07
I-132	5.19E+01	1.36E+02	4.88E+01	4.58E+03	2.14E+02	0.00E+00	5.92E+01
I-133	1.94E+06	3.29E+06	1.00E+06	4.59E+08	5.76E+06	0.00E+00	2.49E+06
I-134	8.73E-05	2.31E-04	8.31E-05	3.85E-03	3.65E-04	0.00E+00	3.05E-06
I-135	3.52E+04	9.07E+04	3.36E+04	5.83E+06	1.43E+05	0.00E+00	1.00E+05
Cs-134	7.10E+09	1.67E+10	7.75E+09	0.00E+00	5.31E+09	2.03E+09	2.08E+08
Cs-136	4.34E+07	1.71E+08	1.15E+08	0.00E+00	9.30E+07	1.47E+07	1.37E+07
Cs-137	1.01E+10	1.35E+10	4.69E+09	0.00E+00	4.59E+09	1.78E+09	1.92E+08
Cs-138	3.61E-11	6.93E-11	3.47E-11	0.00E+00	5.12E-11	5.96E-12	3.15E-14
Ba-139	2.52E-02	1.78E-05	7.35E-04	0.00E+00	1.67E-05	1.22E-05	2.25E-01
Ba-140	1.37E+08	1.68E+05	8.85E+06	0.00E+00	5.70E+04	1.13E+05	2.12E+08
Ba-141	1.08E-21	8.04E-25	3.59E-23	0.00E+00	7.46E-25	5.50E-25	2.29E-27
Ba-142	2.27E-39	2.27E-42	1.40E-40	0.00E+00	1.92E-42	1.51E-42	0.00E+00
La-140	1.81E+03	8.89E+02	2.37E+02	0.00E+00	0.00E+00	0.00E+00	5.11E+07
La-142	1.30E-04	5.76E-05	1.43E-05	0.00E+00	0.00E+00	0.00E+00	1.75E+00
Ce-141	2.83E+05	1.89E+05	2.17E+04	0.00E+00	8.89E+04	0.00E+00	5.40E+08
Ce-143	9.33E+02	6.79E+05	7.58E+01	0.00E+00	3.04E+02	0.00E+00	2.04E+07
Ce-144	5.27E+07	2.18E+07	2.83E+06	0.00E+00	1.30E+07	0.00E+00	1.33E+10
Pr-143	7.00E+04	2.80E+04	3.49E+03	0.00E+00	1.63E+04	0.00E+00	2.30E+08
Pr-144	2.89E-26	1.18E-26	1.47E-27	0.00E+00	6.80E-27	0.00E+00	3.19E-29
Nd-147	3.62E+04	3.94E+04	2.36E+03	0.00E+00	2.31E+04	0.00E+00	1.42E+08
W-187	3.55E+04	2.90E+04	1.02E+04	0.00E+00	0.00E+00	0.00E+00	7.84E+06
Np-239	1.39E+03	1.31E+02	7.28E+01	0.00E+00	4.11E+02	0.00E+00	2.11E+07
K-40	0.00E+00	0.00E+00	0.00E+00	0.00E+00	0.00E+00	0.00E+00	0.00E+00
Co-57	0.00E+00	1.79E+07	3.00E+07	0.00E+00	0.00E+00	0.00E+00	3.33E+08
Sr-85	0.00E+00	0.00E+00	0.00E+00	0.00E+00	0.00E+00	0.00E+00	0.00E+00
Y-88	0.00E+00	0.00E+00	0.00E+00	0.00E+00	0.00E+00	0.00E+00	0.00E+00
Nb-94	0.00E+00	0.00E+00	0.00E+00	0.00E+00	0.00E+00	0.00E+00	0.00E+00
Nb-97	2.00E-06	4.95E-07	1.81E-07	0.00E+00	5.79E-07	0.00E+00	1.18E-02
Cd-109	0.00E+00	0.00E+00	0.00E+00	0.00E+00	0.00E+00	0.00E+00	0.00E+00
Sn-113	0.00E+00	0.00E+00	0.00E+00	0.00E+00	0.00E+00	0.00E+00	0.00E+00
Ba-133	0.00E+00	0.00E+00	0.00E+00	0.00E+00	0.00E+00	0.00E+00	0.00E+00
Te-134	3.23E-08	2.07E-08	2.17E-08	2.65E-08	1.98E-07	0.00E+00	1.20E-09
Ce-139	0.00E+00	0.00E+00	0.00E+00	0.00E+00	0.00E+00	0.00E+00	0.00E+00
Hg-203	0.00E+00	0.00E+00	0.00E+00	0.00E+00	0.00E+00	0.00E+00	0.00E+00

Table 3-11c

CHILD INGESTION (Leafy Vegetable) Ri(V)

m^2 * mrem/yr per uCi/sec (H-3: mrem/yr per uCi/m^3)

Isotope	BONE	LIVER	TOT BODY	THYROID	KIDNEY	LUNG	GILLI
H-3	0.00E+00	4.01E+03	4.01E+03	4.01E+03	4.01E+03	4.01E+03	4.01E+03
Be-7	3.37E+05	5.72E+05	3.77E+05	0.00E+00	5.63E+05	0.00E+00	3.20E+07
Na-24	3.73E+05	3.73E+05	3.73E+05	3.73E+05	3.73E+05	3.73E+05	3.73E+05
P-32	3.37E+09	1.58E+08	1.30E+08	0.00E+00	0.00E+00	0.00E+00	9.31E+07
Cr-51	0.00E+00	0.00E+00	1.17E+05	6.50E+04	1.78E+04	1.19E+05	6.21E+06
Mn-54	0.00E+00	6.65E+08	1.77E+08	0.00E+00	1.86E+08	0.00E+00	5.58E+08
Mn-56	0.00E+00	1.88E+01	4.24E+00	0.00E+00	2.27E+01	0.00E+00	2.72E+03
Fe-55	8.01E+08	4.25E+08	1.32E+08	0.00E+00	0.00E+00	2.40E+08	7.87E+07
Fe-59	3.97E+08	6.42E+08	3.20E+08	0.00E+00	0.00E+00	1.86E+08	6.68E+08
Co-58	0.00E+00	6.44E+07	1.97E+08	0.00E+00	0.00E+00	0.00E+00	3.76E+08
Co-60	0.00E+00	3.78E+08	1.12E+09	0.00E+00	0.00E+00	0.00E+00	2.10E+09
Ni-63	3.95E+10	2.11E+09	1.34E+09	0.00E+00	0.00E+00	0.00E+00	1.42E+08
Ni-65	1.05E+02	9.89E+00	5.77E+00	0.00E+00	0.00E+00	0.00E+00	1.21E+03
Cu-64	0.00E+00	1.10E+04	6.64E+03	0.00E+00	2.66E+04	0.00E+00	5.16E+05
Zn-65	8.12E+08	2.16E+09	1.35E+09	0.00E+00	1.36E+09	0.00E+00	3.80E+08
Zn-69	1.51E-05	2.18E-05	2.02E-06	0.00E+00	1.32E-05	0.00E+00	1.37E-03
Br-83	0.00E+00	0.00E+00	5.37E+00	0.00E+00	0.00E+00	0.00E+00	0.00E+00
Br-84	0.00E+00	0.00E+00	3.82E-11	0.00E+00	0.00E+00	0.00E+00	0.00E+00
Br-85	0.00E+00	0.00E+00	0.00E+00	0.00E+00	0.00E+00	0.00E+00	0.00E+00
Rb-86	0.00E+00	4.52E+08	2.78E+08	0.00E+00	0.00E+00	0.00E+00	2.91E+07
Rb-88	0.00E+00	4.37E-22	3.04E-22	0.00E+00	0.00E+00	0.00E+00	2.15E-23
Rb-89	0.00E+00	1.64E-26	1.46E-26	0.00E+00	0.00E+00	0.00E+00	1.43E-28
Sr-89	3.59E+10	0.00E+00	1.03E+09	0.00E+00	0.00E+00	0.00E+00	1.39E+09
Sr-90	1.24E+12	0.00E+00	3.15E+11	0.00E+00	0.00E+00	0.00E+00	1.67E+10
Sr-91	5.24E+05	0.00E+00	1.98E+04	0.00E+00	0.00E+00	0.00E+00	1.16E+06
Sr-92	7.28E+02	0.00E+00	2.92E+01	0.00E+00	0.00E+00	0.00E+00	1.38E+04
Y-90	2.30E+04	0.00E+00	6.17E+02	0.00E+00	0.00E+00	0.00E+00	6.56E+07
Y-91m	8.91E-09	0.00E+00	3.24E-10	0.00E+00	0.00E+00	0.00E+00	1.74E-05
Y-91	1.86E+07	0.00E+00	4.99E+05	0.00E+00	0.00E+00	0.00E+00	2.48E+09
Y-92	1.58E+00	0.00E+00	4.53E-02	0.00E+00	0.00E+00	0.00E+00	4.58E+04
Y-93	2.93E+02	0.00E+00	8.04E+00	0.00E+00	0.00E+00	0.00E+00	4.37E+06
Zr-95	3.86E+06	8.48E+05	7.55E+05	0.00E+00	1.21E+06	0.00E+00	8.84E+08
Zr-97	5.70E+02	8.24E+01	4.86E+01	0.00E+00	1.18E+02	0.00E+00	1.25E+07
Nb-95	4.12E+05	1.60E+05	1.15E+05	0.00E+00	1.51E+05	0.00E+00	2.97E+08
Mo-99	0.00E+00	7.71E+06	1.91E+06	0.00E+00	1.65E+07	0.00E+00	6.38E+06
Tc-99m	4.71E+00	9.24E+00	1.53E+02	0.00E+00	1.34E+02	4.69E+00	5.26E+03
Tc-101	1.41E-30	1.47E-30	1.87E-29	0.00E+00	2.51E-29	7.78E-31	4.68E-30
Ru-103	1.53E+07	0.00E+00	5.88E+06	0.00E+00	3.85E+07	0.00E+00	3.96E+08
Ru-105	9.16E+01	0.00E+00	3.32E+01	0.00E+00	8.05E+02	0.00E+00	5.98E+04
Ru-106	7.45E+08	0.00E+00	9.30E+07	0.00E+00	1.01E+09	0.00E+00	1.16E+10
Ag-110m	3.21E+07	2.17E+07	1.73E+07	0.00E+00	4.04E+07	0.00E+00	2.58E+09
Sb-122	5.58E+05	8.24E+03	1.64E+05	7.16E+03	0.00E+00	2.27E+05	4.30E+07
Sb-124	3.52E+08	4.56E+06	1.23E+08	7.73E+05	0.00E+00	1.95E+08	2.20E+09
Sb-125	4.99E+08	3.84E+06	1.05E+08	4.63E+05	0.00E+00	2.78E+08	1.19E+09

Table 3-11c

CHILD INGESTION (Leafy Vegetable) Ri(V)

m^2 * mrem/yr per uCi/sec (H-3: mrem/yr per uCi/m^3)

Isotope	BONE	LIVER	TOT BODY	THYROID	KIDNEY	LUNG	GILLI
Te-125m	3.51E+08	9.50E+07	4.67E+07	9.84E+07	0.00E+00	0.00E+00	3.38E+08
Te-127m	1.32E+09	3.56E+08	1.57E+08	3.16E+08	3.77E+09	0.00E+00	1.07E+09
Te-127	9.85E+03	2.65E+03	2.11E+03	6.81E+03	2.80E+04	0.00E+00	3.85E+05
Te-129m	8.41E+08	2.35E+08	1.31E+08	2.71E+08	2.47E+09	0.00E+00	1.03E+09
Te-129	1.32E-03	3.69E-04	3.14E-04	9.43E-04	3.87E-03	0.00E+00	8.23E-02
Te-131m	1.54E+06	5.33E+05	5.68E+05	1.10E+06	5.16E+06	0.00E+00	2.16E+07
Te-131	2.57E-15	7.83E-16	7.64E-16	1.97E-15	7.77E-15	0.00E+00	1.35E-14
Te-132	7.00E+06	3.10E+06	3.74E+06	4.51E+06	2.88E+07	0.00E+00	3.12E+07
I-130	6.16E+05	1.24E+06	6.41E+05	1.37E+08	1.86E+06	0.00E+00	5.82E+05
I-131	1.43E+08	1.44E+08	8.17E+07	4.75E+10	2.36E+08	0.00E+00	1.28E+07
I-132	9.22E+01	1.69E+02	7.79E+01	7.86E+03	2.59E+02	0.00E+00	1.99E+02
I-133	3.53E+06	4.37E+06	1.65E+06	8.11E+08	7.28E+06	0.00E+00	1.76E+06
I-134	1.55E-04	2.88E-04	1.32E-04	6.62E-03	4.40E-04	0.00E+00	1.91E-04
I-135	6.26E+04	1.13E+05	5.33E+04	9.97E+06	1.73E+05	0.00E+00	8.58E+04
Cs-134	1.60E+10	2.63E+10	5.55E+09	0.00E+00	8.15E+09	2.93E+09	1.42E+08
Cs-136	8.17E+07	2.25E+08	1.45E+08	0.00E+00	1.20E+08	1.78E+07	7.90E+06
Cs-137	2.39E+10	2.29E+10	3.38E+09	0.00E+00	7.46E+09	2.68E+09	1.43E+08
Cs-138	6.57E-11	9.13E-11	5.79E-11	0.00E+00	6.43E-11	6.91E-12	4.21E-11
Ba-139	4.65E-02	2.48E-05	1.35E-03	0.00E+00	2.17E-05	1.46E-05	2.69E+00
Ba-140	2.75E+08	2.41E+05	1.60E+07	0.00E+00	7.84E+04	1.44E+05	1.39E+08
Ba-141	1.99E-21	1.11E-24	6.47E-23	0.00E+00	9.62E-25	6.53E-24	1.13E-21
Ba-142	4.11E-39	2.96E-42	2.29E-40	0.00E+00	2.39E-42	1.74E-42	5.36E-41
La-140	3.25E+03	1.14E+03	3.83E+02	0.00E+00	0.00E+00	0.00E+00	3.17E+07
La-142	2.35E-04	7.49E-05	2.35E-05	0.00E+00	0.00E+00	0.00E+00	1.48E+01
Ce-141	6.56E+05	3.27E+05	4.86E+04	0.00E+00	1.43E+05	0.00E+00	4.08E+08
Ce-143	1.72E+03	9.31E+05	1.35E+02	0.00E+00	3.91E+02	0.00E+00	1.36E+07
Ce-144	1.27E+08	3.98E+07	6.78E+06	0.00E+00	2.21E+07	0.00E+00	1.04E+10
Pr-143	1.46E+05	4.37E+04	7.23E+03	0.00E+00	2.37E+04	0.00E+00	1.57E+08
Pr-144	5.37E-26	1.66E-26	2.70E-27	0.00E+00	8.79E-27	0.00E+00	3.58E-23
Nd-147	7.15E+04	5.79E+04	4.48E+03	0.00E+00	3.18E+04	0.00E+00	9.17E+07
W-187	6.47E+04	3.83E+04	1.72E+04	0.00E+00	0.00E+00	0.00E+00	5.38E+06
Np-239	2.57E+03	1.84E+02	1.29E+02	0.00E+00	5.33E+02	0.00E+00	1.36E+07
K-40	0.00E+00	0.00E+00	0.00E+00	0.00E+00	0.00E+00	0.00E+00	0.00E+00
Co-57	0.00E+00	2.99E+07	6.04E+07	0.00E+00	0.00E+00	0.00E+00	2.45E+08
Sr-85	0.00E+00	0.00E+00	0.00E+00	0.00E+00	0.00E+00	0.00E+00	0.00E+00
Y-88	0.00E+00	0.00E+00	0.00E+00	0.00E+00	0.00E+00	0.00E+00	0.00E+00
Nb-94	0.00E+00	0.00E+00	0.00E+00	0.00E+00	0.00E+00	0.00E+00	0.00E+00
Nb-97	3.64E-06	6.57E-07	3.07E-07	0.00E+00	7.29E-07	0.00E+00	2.03E-01
Cd-109	0.00E+00	0.00E+00	0.00E+00	0.00E+00	0.00E+00	0.00E+00	0.00E+00
Sn-113	0.00E+00	0.00E+00	0.00E+00	0.00E+00	0.00E+00	0.00E+00	0.00E+00
Ba-133	0.00E+00	0.00E+00	0.00E+00	0.00E+00	0.00E+00	0.00E+00	0.00E+00
Te-134	5.76E-08	2.59E-08	3.46E-08	4.56E-08	2.40E-07	0.00E+00	2.63E-07
Ce-139	0.00E+00	0.00E+00	0.00E+00	0.00E+00	0.00E+00	0.00E+00	0.00E+00
Hg-203	0.00E+00	0.00E+00	0.00E+00	0.00E+00	0.00E+00	0.00E+00	0.00E+00

Table 3-12a

ADULT GRASS/COW/MILK PATHWAY Ri(C)

m^2 * mrem/yr per uCi/sec (H-3: mrem/yr per uCi/m^3)

Isotope	BONE	LIVER	TOT BODY	THYROID	KIDNEY	LUNG	GILLI
H-3	0.00E+00	7.63E+02	7.63E+02	7.63E+02	7.63E+02	7.63E+02	7.63E+02
Be-7	1.65E+03	3.73E+03	1.85E+03	0.00E+00	3.92E+03	0.00E+00	6.44E+05
Na-24	2.44E+06	2.44E+06	2.44E+06	2.44E+06	2.44E+06	2.44E+06	2.44E+06
P-32	1.71E+10	1.06E+09	6.61E+08	0.00E+00	0.00E+00	0.00E+00	1.92E+09
Cr-51	0.00E+00	0.00E+00	2.86E+04	1.71E+04	6.30E+03	3.79E+04	7.19E+06
Mn-54	0.00E+00	8.41E+06	1.61E+06	0.00E+00	2.50E+06	0.00E+00	2.58E+07
Mn-56	0.00E+00	4.15E-03	7.36E-04	0.00E+00	5.27E-03	0.00E+00	1.32E-01
Fe-55	2.51E+07	1.74E+07	4.05E+06	0.00E+00	0.00E+00	9.68E+06	9.95E+06
Fe-59	2.97E+07	6.98E+07	2.67E+07	0.00E+00	0.00E+00	1.95E+07	2.33E+08
Co-58	0.00E+00	4.71E+06	1.06E+07	0.00E+00	0.00E+00	0.00E+00	9.55E+07
Co-60	0.00E+00	1.64E+07	3.62E+07	0.00E+00	0.00E+00	0.00E+00	3.08E+08
Ni-63	6.73E+09	4.66E+08	2.26E+08	0.00E+00	0.00E+00	0.00E+00	9.73E+07
Ni-65	3.70E-01	4.81E-02	2.19E-02	0.00E+00	0.00E+00	0.00E+00	1.22E+00
Cu-64	0.00E+00	2.38E+04	1.12E+04	0.00E+00	6.01E+04	0.00E+00	2.03E+06
Zn-65	1.37E+09	4.36E+09	1.97E+09	0.00E+00	2.92E+09	0.00E+00	2.75E+09
Zn-69	5.18E-12	9.91E-12	6.89E-13	0.00E+00	6.44E-12	0.00E+00	1.49E-12
Br-83	0.00E+00	0.00E+00	9.72E-02	0.00E+00	0.00E+00	0.00E+00	1.40E-01
Br-84	0.00E+00	0.00E+00	1.61E-23	0.00E+00	0.00E+00	0.00E+00	1.26E-28
Br-85	0.00E+00	0.00E+00	0.00E+00	0.00E+00	0.00E+00	0.00E+00	0.00E+00
Rb-86	0.00E+00	2.59E+09	1.21E+09	0.00E+00	0.00E+00	0.00E+00	5.12E+08
Rb-88	0.00E+00	0.00E+00	0.00E+00	0.00E+00	0.00E+00	0.00E+00	0.00E+00
Rb-89	0.00E+00	0.00E+00	0.00E+00	0.00E+00	0.00E+00	0.00E+00	0.00E+00
Sr-89	1.45E+09	0.00E+00	4.16E+07	0.00E+00	0.00E+00	0.00E+00	2.33E+08
Sr-90	4.68E+10	0.00E+00	1.15E+10	0.00E+00	0.00E+00	0.00E+00	1.35E+09
Sr-91	2.89E+04	0.00E+00	1.17E+03	0.00E+00	0.00E+00	0.00E+00	1.38E+05
Sr-92	4.88E-01	0.00E+00	2.11E-02	0.00E+00	0.00E+00	0.00E+00	9.68E+00
Y-90	7.07E+01	0.00E+00	1.90E+00	0.00E+00	0.00E+00	0.00E+00	7.49E+05
Y-91m	5.98E-20	0.00E+00	2.32E-21	0.00E+00	0.00E+00	0.00E+00	1.76E-19
Y-91	8.59E+03	0.00E+00	2.30E+02	0.00E+00	0.00E+00	0.00E+00	4.73E+06
Y-92	5.58E-05	0.00E+00	1.63E-06	0.00E+00	0.00E+00	0.00E+00	9.77E-01
Y-93	2.23E-01	0.00E+00	6.17E-03	0.00E+00	0.00E+00	0.00E+00	7.08E+03
Zr-95	9.43E+02	3.02E+02	2.05E+02	0.00E+00	4.75E+02	0.00E+00	9.59E+05
Zr-97	4.33E-01	8.74E-02	4.00E-02	0.00E+00	1.32E-01	0.00E+00	2.71E+04
Nb-95	8.26E+04	4.60E+04	2.47E+04	0.00E+00	4.54E+04	0.00E+00	2.79E+08
Mo-99	0.00E+00	2.48E+07	4.71E+06	0.00E+00	5.61E+07	0.00E+00	5.74E+07
Tc-99m	3.32E+00	9.38E+00	1.20E+02	0.00E+00	1.43E+02	4.60E+00	5.55E+03
Tc-101	0.00E+00	0.00E+00	0.00E+00	0.00E+00	0.00E+00	0.00E+00	0.00E+00
Ru-103	1.02E+03	0.00E+00	4.38E+02	0.00E+00	3.88E+03	0.00E+00	1.19E+05
Ru-105	8.57E-04	0.00E+00	3.38E-04	0.00E+00	1.11E-02	0.00E+00	5.24E-01
Ru-106	2.04E+04	0.00E+00	2.58E+03	0.00E+00	3.94E+04	0.00E+00	1.32E+06
Ag-110m	5.82E+07	5.39E+07	3.20E+07	0.00E+00	1.06E+08	0.00E+00	2.20E+10
Sb-122	2.24E+05	5.16E+03	7.73E+04	3.47E+03	0.00E+00	1.35E+05	8.52E+07
Sb-124	2.57E+07	4.87E+05	1.01E+07	6.25E+04	0.00E+00	2.00E+07	7.31E+08
Sb-125	2.04E+07	2.28E+05	4.86E+06	2.08E+04	0.00E+00	1.58E+07	2.25E+08

Table 3-12a

ADULT GRASS/COW/MILK PATHWAY Ri(C)

m^2 * mrem/yr per uCi/sec (H-3: mrem/yr per uCi/m^3)

Isotope	BONE	LIVER	TOT BODY	THYROID	KIDNEY	LUNG	GILLI
Te-125m	1.63E+07	5.90E+06	2.18E+06	4.90E+06	6.63E+07	0.00E+00	6.50E+07
Te-127m	4.58E+07	1.64E+07	5.58E+06	1.17E+07	1.86E+08	0.00E+00	1.54E+08
Te-127	6.53E+02	2.34E+02	1.41E+02	4.84E+02	2.66E+03	0.00E+00	5.15E+04
Te-129m	6.02E+07	2.25E+07	9.53E+06	2.07E+07	2.51E+08	0.00E+00	3.03E+08
Te-129	2.82E-10	1.06E-10	6.88E-11	2.17E-10	1.19E-09	0.00E+00	2.13E-10
Te-131m	3.61E+05	1.77E+05	1.47E+05	2.80E+05	1.79E+06	0.00E+00	1.75E+07
Te-131	3.60E-33	1.51E-33	1.14E-33	2.96E-33	1.58E-32	0.00E+00	5.10E-34
Te-132	2.40E+06	1.55E+06	1.46E+06	1.72E+06	1.50E+07	0.00E+00	7.35E+07
I-130	4.20E+05	1.24E+06	4.89E+05	1.05E+08	1.93E+06	0.00E+00	1.07E+06
I-131	2.96E+08	4.23E+08	2.43E+08	1.39E+11	7.26E+08	0.00E+00	1.12E+08
I-132	1.64E-01	4.39E-01	1.54E-01	1.54E+01	7.00E-01	0.00E+00	8.25E-02
I-133	3.87E+06	6.73E+06	2.05E+06	9.89E+08	1.17E+07	0.00E+00	6.05E+06
I-134	2.02E-12	5.48E-12	1.96E-12	9.49E-11	8.71E-12	0.00E+00	4.77E-15
I-135	1.28E+04	3.36E+04	1.24E+04	2.22E+06	5.39E+04	0.00E+00	3.80E+04
Cs-134	5.65E+09	1.35E+10	1.10E+10	0.00E+00	4.35E+09	1.45E+09	2.35E+08
Cs-136	2.63E+08	1.04E+09	7.46E+08	0.00E+00	5.77E+08	7.90E+07	1.18E+08
Cs-137	7.38E+09	1.01E+10	6.61E+09	0.00E+00	3.43E+09	1.14E+09	1.95E+08
Cs-138	9.04E-24	1.79E-23	8.85E-24	0.00E+00	1.31E-23	1.30E-24	7.62E-29
Ba-139	3.92E-08	2.79E-11	1.15E-09	0.00E+00	2.61E-11	1.58E-11	6.94E-08
Ba-140	2.68E+07	3.37E+04	1.76E+06	0.00E+00	1.15E+04	1.93E+04	5.52E+07
Ba-141	0.00E+00	0.00E+00	0.00E+00	0.00E+00	0.00E+00	0.00E+00	0.00E+00
Ba-142	0.00E+00	0.00E+00	0.00E+00	0.00E+00	0.00E+00	0.00E+00	0.00E+00
La-140	4.52E+00	2.28E+00	6.02E-01	0.00E+00	0.00E+00	0.00E+00	1.67E+05
La-142	9.34E-12	4.25E-12	1.06E-12	0.00E+00	0.00E+00	0.00E+00	3.10E-08
Ce-141	4.84E+03	3.28E+03	3.72E+02	0.00E+00	1.52E+03	0.00E+00	1.25E+07
Ce-143	4.16E+01	3.07E+04	3.40E+00	0.00E+00	1.35E+01	0.00E+00	1.15E+06
Ce-144	3.58E+05	1.50E+05	1.92E+04	0.00E+00	8.87E+04	0.00E+00	1.21E+08
Pr-143	1.58E+02	6.33E+01	7.83E+00	0.00E+00	3.66E+01	0.00E+00	6.92E+05
Pr-144	0.00E+00	0.00E+00	0.00E+00	0.00E+00	0.00E+00	0.00E+00	0.00E+00
Nd-147	9.42E+01	1.09E+02	6.51E+00	0.00E+00	6.36E+01	0.00E+00	5.22E+05
W-187	6.56E+03	5.48E+03	1.92E+03	0.00E+00	0.00E+00	0.00E+00	1.80E+06
Np-239	3.68E+00	3.62E-01	2.00E-01	0.00E+00	1.13E+00	0.00E+00	7.43E+04
K-40	0.00E+00	0.00E+00	0.00E+00	0.00E+00	0.00E+00	0.00E+00	0.00E+00
Co-57	0.00E+00	1.28E+06	2.13E+06	0.00E+00	0.00E+00	0.00E+00	3.25E+07
Sr-85	0.00E+00	0.00E+00	0.00E+00	0.00E+00	0.00E+00	0.00E+00	0.00E+00
Y-88	0.00E+00	0.00E+00	0.00E+00	0.00E+00	0.00E+00	0.00E+00	0.00E+00
Nb-94	0.00E+00	0.00E+00	0.00E+00	0.00E+00	0.00E+00	0.00E+00	0.00E+00
Nb-97	3.29E-12	8.32E-13	3.04E-13	0.00E+00	9.71E-13	0.00E+00	3.07E-09
Cd-109	0.00E+00	0.00E+00	0.00E+00	0.00E+00	0.00E+00	0.00E+00	0.00E+00
Sn-113	0.00E+00	0.00E+00	0.00E+00	0.00E+00	0.00E+00	0.00E+00	0.00E+00
Ba-133	0.00E+00	0.00E+00	0.00E+00	0.00E+00	0.00E+00	0.00E+00	0.00E+00
Te-134	8.90E-19	5.83E-19	3.57E-19	7.78E-19	5.63E-18	0.00E+00	9.87E-22
Ce-139	0.00E+00	0.00E+00	0.00E+00	0.00E+00	0.00E+00	0.00E+00	0.00E+00
Hg-203	0.00E+00	0.00E+00	0.00E+00	0.00E+00	0.00E+00	0.00E+00	0.00E+00

Table 3-12b

TEEN GRASS/COW/MILK PATHWAY Ri(C)

m^2 * mrem/yr per uCi/sec (H-3: mrem/yr per uCi/m^3)

Isotope	BONE	LIVER	TOT BODY	THYROID	KIDNEY	LUNG	GILLI
H-3	0.00E+00	9.94E+02	9.94E+02	9.94E+02	9.94E+02	9.94E+02	9.94E+02
Be-7	3.05E+03	6.83E+03	3.41E+03	0.00E+00	7.23E+03	0.00E+00	8.31E+05
Na-24	4.26E+06	4.26E+06	4.26E+06	4.26E+06	4.26E+06	4.26E+06	4.26E+06
P-32	3.15E+10	1.95E+09	1.22E+09	0.00E+00	0.00E+00	0.00E+00	2.65E+09
Cr-51	0.00E+00	0.00E+00	4.99E+04	2.77E+04	1.09E+04	7.13E+04	8.39E+06
Mn-54	0.00E+00	1.40E+07	2.78E+06	0.00E+00	4.18E+06	0.00E+00	2.87E+07
Mn-56	0.00E+00	7.36E-03	1.31E-03	0.00E+00	9.31E-03	0.00E+00	4.84E-01
Fe-55	4.45E+07	3.16E+07	7.36E+06	0.00E+00	0.00E+00	2.00E+07	1.37E+07
Fe-59	5.18E+07	1.21E+08	4.67E+07	0.00E+00	0.00E+00	3.81E+07	2.86E+08
Co-58	0.00E+00	7.94E+06	1.83E+07	0.00E+00	0.00E+00	0.00E+00	1.09E+08
Co-60	0.00E+00	2.78E+07	6.26E+07	0.00E+00	0.00E+00	0.00E+00	3.62E+08
Ni-63	1.18E+10	8.35E+08	4.01E+08	0.00E+00	0.00E+00	0.00E+00	1.33E+08
Ni-65	6.77E-01	8.65E-02	3.94E-02	0.00E+00	0.00E+00	0.00E+00	4.69E+00
Cu-64	0.00E+00	4.25E+04	2.00E+04	0.00E+00	1.07E+05	0.00E+00	3.29E+06
Zn-65	2.11E+09	7.31E+09	3.41E+09	0.00E+00	4.68E+09	0.00E+00	3.10E+09
Zn-69	9.55E-12	1.82E-11	1.27E-12	0.00E+00	1.19E-11	0.00E+00	3.35E-11
Br-83	0.00E+00	0.00E+00	1.79E-01	0.00E+00	0.00E+00	0.00E+00	0.00E+00
Br-84	0.00E+00	0.00E+00	2.88E-23	0.00E+00	0.00E+00	0.00E+00	0.00E+00
Br-85	0.00E+00	0.00E+00	0.00E+00	0.00E+00	0.00E+00	0.00E+00	0.00E+00
Rb-86	0.00E+00	4.73E+09	2.22E+09	0.00E+00	0.00E+00	0.00E+00	7.00E+08
Rb-88	0.00E+00	0.00E+00	0.00E+00	0.00E+00	0.00E+00	0.00E+00	0.00E+00
Rb-89	0.00E+00	0.00E+00	0.00E+00	0.00E+00	0.00E+00	0.00E+00	0.00E+00
Sr-89	2.67E+09	0.00E+00	7.66E+07	0.00E+00	0.00E+00	0.00E+00	3.18E+08
Sr-90	6.61E+10	0.00E+00	1.63E+10	0.00E+00	0.00E+00	0.00E+00	1.86E+09
Sr-91	5.31E+04	0.00E+00	2.11E+03	0.00E+00	0.00E+00	0.00E+00	2.41E+05
Sr-92	8.94E-01	0.00E+00	3.81E-02	0.00E+00	0.00E+00	0.00E+00	2.28E+01
Y-90	1.30E+02	0.00E+00	3.50E+00	0.00E+00	0.00E+00	0.00E+00	1.07E+06
Y-91m	1.10E-19	0.00E+00	4.19E-21	0.00E+00	0.00E+00	0.00E+00	5.17E-18
Y-91	1.58E+04	0.00E+00	4.24E+02	0.00E+00	0.00E+00	0.00E+00	6.48E+06
Y-92	1.03E-04	0.00E+00	2.98E-06	0.00E+00	0.00E+00	0.00E+00	2.83E+00
Y-93	4.12E-01	0.00E+00	1.13E-02	0.00E+00	0.00E+00	0.00E+00	1.26E+04
Zr-95	1.65E+03	5.20E+02	3.58E+02	0.00E+00	7.65E+02	0.00E+00	1.20E+06
Zr-97	7.88E-01	1.56E-01	7.19E-02	0.00E+00	2.37E-01	0.00E+00	4.22E+04
Nb-95	1.41E+05	7.82E+04	4.30E+04	0.00E+00	7.58E+04	0.00E+00	3.34E+08
Mo-99	0.00E+00	4.47E+07	8.52E+06	0.00E+00	1.02E+08	0.00E+00	8.01E+07
Tc-99m	5.76E+00	1.61E+01	2.08E+02	0.00E+00	2.39E+02	8.92E+00	1.05E+04
Tc-101	0.00E+00	0.00E+00	0.00E+00	0.00E+00	0.00E+00	0.00E+00	0.00E+00
Ru-103	1.81E+03	0.00E+00	7.74E+02	0.00E+00	6.38E+03	0.00E+00	1.51E+05
Ru-105	1.56E-03	0.00E+00	6.07E-04	0.00E+00	1.97E-02	0.00E+00	1.26E+00
Ru-106	3.75E+04	0.00E+00	4.73E+03	0.00E+00	7.24E+04	0.00E+00	1.80E+06
Ag-110m	9.63E+07	9.11E+07	5.54E+07	0.00E+00	1.74E+08	0.00E+00	2.56E+10
Sb-122	4.77E+05	9.29E+03	1.39E+05	6.06E+03	0.00E+00	2.98E+05	1.00E+08
Sb-124	4.58E+07	8.44E+05	1.79E+07	1.04E+05	0.00E+00	4.00E+07	9.26E+08
Sb-125	3.65E+07	3.99E+05	8.53E+06	3.48E+04	0.00E+00	3.18E+07	2.83E+08

Table 3-12b

TEEN GRASS/COW/MILK PATHWAY Ri(C)

m^2 * mrem/yr per uCi/sec (H-3: mrem/yr per uCi/m^3)

Isotope	BONE	LIVER	TOT BODY	THYROID	KIDNEY	LUNG	GILLI
Te-125m	3.00E+07	1.08E+07	4.02E+06	8.39E+06	0.00E+00	0.00E+00	8.86E+07
Te-127m	8.44E+07	2.99E+07	1.00E+07	2.01E+07	3.42E+08	0.00E+00	2.10E+08
Te-127	1.21E+03	4.29E+02	2.60E+02	8.35E+02	4.90E+03	0.00E+00	9.34E+04
Te-129m	1.10E+08	4.09E+07	1.74E+07	3.55E+07	4.61E+08	0.00E+00	4.13E+08
Te-129	5.20E-10	1.94E-10	1.26E-10	3.71E-10	2.18E-09	0.00E+00	2.84E-09
Te-131m	6.57E+05	3.15E+05	2.63E+05	4.74E+05	3.29E+06	0.00E+00	2.53E+07
Te-131	6.58E-33	2.71E-33	2.06E-33	5.07E-33	2.88E-32	0.00E+00	5.40E-34
Te-132	4.29E+06	2.72E+06	2.56E+06	2.87E+06	2.61E+07	0.00E+00	8.61E+07
I-130	7.38E+05	2.14E+06	8.53E+05	1.74E+08	3.29E+06	0.00E+00	1.64E+06
I-131	5.37E+08	7.52E+08	4.04E+08	2.19E+11	1.29E+09	0.00E+00	1.49E+08
I-132	2.91E-01	7.62E-01	2.74E-01	2.57E+01	1.20E+00	0.00E+00	3.32E-01
I-133	7.07E+06	1.20E+07	3.66E+06	1.67E+09	2.10E+07	0.00E+00	9.07E+06
I-134	3.58E-12	9.50E-12	3.41E-12	1.58E-10	1.50E-11	0.00E+00	1.25E-13
I-135	2.28E+04	5.87E+04	2.18E+04	3.78E+06	9.27E+04	0.00E+00	6.51E+04
Cs-134	9.82E+09	2.31E+10	1.07E+10	0.00E+00	7.34E+09	2.80E+09	2.87E+08
Cs-136	4.47E+08	1.76E+09	1.18E+09	0.00E+00	9.57E+08	1.51E+08	1.42E+08
Cs-137	1.34E+10	1.78E+10	6.20E+09	0.00E+00	6.06E+09	2.35E+09	2.53E+08
Cs-138	1.64E-23	3.15E-23	1.57E-23	0.00E+00	2.33E-23	2.71E-24	1.43E-26
Ba-139	7.24E-08	5.09E-11	2.11E-09	0.00E+00	4.80E-11	3.51E-11	6.46E-07
Ba-140	4.84E+07	5.93E+04	3.12E+06	0.00E+00	2.01E+04	3.99E+04	7.46E+07
Ba-141	0.00E+00	0.00E+00	0.00E+00	0.00E+00	0.00E+00	0.00E+00	0.00E+00
Ba-142	0.00E+00	0.00E+00	0.00E+00	0.00E+00	0.00E+00	0.00E+00	0.00E+00
La-140	8.12E+00	3.99E+00	1.06E+00	0.00E+00	0.00E+00	0.00E+00	2.29E+05
La-142	1.69E-11	7.49E-12	1.86E-12	0.00E+00	0.00E+00	0.00E+00	2.28E-07
Ce-141	8.88E+03	5.93E+03	6.81E+02	0.00E+00	2.79E+03	0.00E+00	1.70E+07
Ce-143	7.64E+01	5.56E+04	6.21E+00	0.00E+00	2.49E+01	0.00E+00	1.67E+06
Ce-144	6.58E+05	2.72E+05	3.54E+04	0.00E+00	1.63E+05	0.00E+00	1.66E+08
Pr-143	2.90E+02	1.16E+02	1.44E+01	0.00E+00	6.73E+01	0.00E+00	9.54E+05
Pr-144	0.00E+00	0.00E+00	0.00E+00	0.00E+00	0.00E+00	0.00E+00	0.00E+00
Nd-147	1.81E+02	1.97E+02	1.18E+01	0.00E+00	1.16E+02	0.00E+00	7.11E+05
W-187	1.20E+04	9.78E+03	3.43E+03	0.00E+00	0.00E+00	0.00E+00	2.65E+06
Np-239	7.03E+00	6.63E-01	3.68E-01	0.00E+00	2.08E+00	0.00E+00	1.07E+05
K-40	0.00E+00	0.00E+00	0.00E+00	0.00E+00	0.00E+00	0.00E+00	0.00E+00
Co-57	0.00E+00	2.25E+06	3.76E+06	0.00E+00	0.00E+00	0.00E+00	4.19E+07
Sr-85	0.00E+00	0.00E+00	0.00E+00	0.00E+00	0.00E+00	0.00E+00	0.00E+00
Y-88	0.00E+00	0.00E+00	0.00E+00	0.00E+00	0.00E+00	0.00E+00	0.00E+00
Nb-94	0.00E+00	0.00E+00	0.00E+00	0.00E+00	0.00E+00	0.00E+00	0.00E+00
Nb-97	5.99E-12	1.49E-12	5.43E-13	0.00E+00	1.74E-12	0.00E+00	3.55E-08
Cd-109	0.00E+00	0.00E+00	0.00E+00	0.00E+00	0.00E+00	0.00E+00	0.00E+00
Sn-113	0.00E+00	0.00E+00	0.00E+00	0.00E+00	0.00E+00	0.00E+00	0.00E+00
Ba-133	0.00E+00	0.00E+00	0.00E+00	0.00E+00	0.00E+00	0.00E+00	0.00E+00
Te-134	1.59E-18	1.02E-18	1.06E-18	1.30E-18	9.72E-18	0.00E+00	5.89E-20
Ce-139	0.00E+00	0.00E+00	0.00E+00	0.00E+00	0.00E+00	0.00E+00	0.00E+00
Hg-203	0.00E+00	0.00E+00	0.00E+00	0.00E+00	0.00E+00	0.00E+00	0.00E+00

Table 3-12c

CHILD GRASS/COW/MILK PATHWAY Ri(C)

m^2 * mrem/yr per uCi/sec (H-3: mrem/yr per uCi/m^3)

Isotope	BONE	LIVER	TOT BODY	THYROID	KIDNEY	LUNG	GILLI
H-3	0.00E+00	1.57E+03	1.57E+03	1.57E+03	1.57E+03	1.57E+03	1.57E+03
Be-7	7.49E+03	1.27E+04	8.38E+03	0.00E+00	1.25E+04	0.00E+00	7.11E+05
Na-24	8.85E+06	8.85E+06	8.85E+06	8.85E+06	8.85E+06	8.85E+06	8.85E+06
P-32	7.78E+10	3.64E+09	3.00E+09	0.00E+00	0.00E+00	0.00E+00	2.15E+09
Cr-51	0.00E+00	0.00E+00	1.02E+05	5.65E+04	1.54E+04	1.03E+05	5.40E+06
Mn-54	0.00E+00	2.10E+07	5.59E+06	0.00E+00	5.88E+06	0.00E+00	1.76E+07
Mn-56	0.00E+00	1.28E-02	2.90E-03	0.00E+00	1.55E-02	0.00E+00	1.86E+00
Fe-55	1.12E+08	5.93E+07	1.84E+07	0.00E+00	0.00E+00	3.35E+07	1.10E+07
Fe-59	1.20E+08	1.94E+08	9.68E+07	0.00E+00	0.00E+00	5.64E+07	2.02E+08
Co-58	0.00E+00	1.21E+07	3.71E+07	0.00E+00	0.00E+00	0.00E+00	7.07E+07
Co-60	0.00E+00	4.32E+07	1.27E+08	0.00E+00	0.00E+00	0.00E+00	2.39E+08
Ni-63	2.96E+10	1.59E+09	1.01E+09	0.00E+00	0.00E+00	0.00E+00	1.07E+08
Ni-65	1.66E+00	1.56E-01	9.10E-02	0.00E+00	0.00E+00	0.00E+00	1.91E+01
Cu-64	0.00E+00	7.46E+04	4.51E+04	0.00E+00	1.80E+05	0.00E+00	3.50E+06
Zn-65	4.13E+09	1.10E+10	6.85E+09	0.00E+00	6.94E+09	0.00E+00	1.93E+09
Zn-69	2.35E-11	3.39E-11	3.13E-12	0.00E+00	2.06E-11	0.00E+00	2.14E-09
Br-83	0.00E+00	0.00E+00	4.40E-01	0.00E+00	0.00E+00	0.00E+00	0.00E+00
Br-84	0.00E+00	0.00E+00	6.51E-23	0.00E+00	0.00E+00	0.00E+00	0.00E+00
Br-85	0.00E+00	0.00E+00	0.00E+00	0.00E+00	0.00E+00	0.00E+00	0.00E+00
Rb-86	0.00E+00	8.77E+09	5.39E+09	0.00E+00	0.00E+00	0.00E+00	5.64E+08
Rb-88	0.00E+00	0.00E+00	0.00E+00	0.00E+00	0.00E+00	0.00E+00	0.00E+00
Rb-89	0.00E+00	0.00E+00	0.00E+00	0.00E+00	0.00E+00	0.00E+00	0.00E+00
Sr-89	6.62E+09	0.00E+00	1.89E+08	0.00E+00	0.00E+00	0.00E+00	2.56E+08
Sr-90	1.12E+11	0.00E+00	2.83E+10	0.00E+00	0.00E+00	0.00E+00	1.51E+09
Sr-91	1.30E+05	0.00E+00	4.92E+03	0.00E+00	0.00E+00	0.00E+00	2.88E+05
Sr-92	2.18E+00	0.00E+00	8.75E-02	0.00E+00	0.00E+00	0.00E+00	4.13E+01
Y-90	3.21E+02	0.00E+00	8.60E+00	0.00E+00	0.00E+00	0.00E+00	9.15E+05
Y-91m	2.68E-19	0.00E+00	9.74E-21	0.00E+00	0.00E+00	0.00E+00	5.24E-16
Y-91	3.90E+04	0.00E+00	1.04E+03	0.00E+00	0.00E+00	0.00E+00	5.20E+06
Y-92	2.53E-04	0.00E+00	7.24E-06	0.00E+00	0.00E+00	0.00E+00	7.31E+00
Y-93	1.01E+00	0.00E+00	2.78E-02	0.00E+00	0.00E+00	0.00E+00	1.51E+04
Zr-95	3.83E+03	8.42E+02	7.50E+02	0.00E+00	1.21E+03	0.00E+00	8.79E+05
Zr-97	1.92E+00	2.77E-01	1.64E-01	0.00E+00	3.98E-01	0.00E+00	4.20E+04
Nb-95	3.18E+05	1.24E+05	8.85E+04	0.00E+00	1.16E+05	0.00E+00	2.29E+08
Mo-99	0.00E+00	8.13E+07	2.01E+07	0.00E+00	1.74E+08	0.00E+00	6.73E+07
Tc-99m	1.32E+01	2.59E+01	4.29E+02	0.00E+00	3.76E+02	1.32E+01	1.47E+04
Tc-101	0.00E+00	0.00E+00	0.00E+00	0.00E+00	0.00E+00	0.00E+00	0.00E+00
Ru-103	4.28E+03	0.00E+00	1.65E+03	0.00E+00	1.08E+04	0.00E+00	1.11E+05
Ru-105	3.82E-03	0.00E+00	1.39E-03	0.00E+00	3.36E-02	0.00E+00	2.49E+00
Ru-106	9.24E+04	0.00E+00	1.15E+04	0.00E+00	1.25E+05	0.00E+00	1.44E+06
Ag-110m	2.09E+08	1.41E+08	1.13E+08	0.00E+00	2.63E+08	0.00E+00	1.68E+10
Sb-122	1.17E+06	1.73E+04	3.44E+05	1.50E+04	0.00E+00	4.77E+05	9.02E+07
Sb-124	1.09E+08	1.41E+06	3.80E+07	2.39E+05	0.00E+00	6.02E+07	6.78E+08
Sb-125	8.69E+07	6.70E+05	1.82E+07	8.06E+04	0.00E+00	4.84E+07	2.08E+08

Table 3-12c

CHILD GRASS/COW/MILK PATHWAY Ri(C)

m^2 * mrem/yr per uCi/sec (H-3: mrem/yr per uCi/m^3)

Isotope	BONE	LIVER	TOT BODY	THYROID	KIDNEY	LUNG	GILLI
Te-125m	7.38E+07	2.00E+07	9.84E+06	2.07E+07	0.00E+00	0.00E+00	7.12E+07
Te-127m	2.08E+08	5.60E+07	2.47E+07	4.97E+07	5.93E+08	0.00E+00	1.68E+08
Te-127	2.98E+03	8.02E+02	6.38E+02	2.06E+03	8.47E+03	0.00E+00	1.16E+05
Te-129m	2.71E+08	7.58E+07	4.21E+07	8.75E+07	7.97E+08	0.00E+00	3.31E+08
Te-129	1.28E-09	3.58E-10	3.04E-10	9.15E-10	3.75E-09	0.00E+00	7.98E-08
Te-131m	1.60E+06	5.53E+05	5.89E+05	1.14E+06	5.35E+06	0.00E+00	2.24E+07
Te-131	1.62E-32	4.93E-33	4.81E-33	1.24E-32	4.89E-32	0.00E+00	8.49E-32
Te-132	1.02E+07	4.53E+06	5.48E+06	6.60E+06	4.21E+07	0.00E+00	4.57E+07
I-130	1.73E+06	3.49E+06	1.80E+06	3.84E+08	5.22E+06	0.00E+00	1.63E+06
I-131	1.30E+09	1.31E+09	7.45E+08	4.33E+11	2.15E+09	0.00E+00	1.17E+08
I-132	6.89E-01	1.27E+00	5.82E-01	5.87E+01	1.94E+00	0.00E+00	1.49E+00
I-133	1.72E+07	2.12E+07	8.03E+06	3.94E+09	3.54E+07	0.00E+00	8.56E+06
I-134	8.48E-12	1.58E-11	7.25E-12	3.62E-10	2.41E-11	0.00E+00	1.04E-11
I-135	5.40E+04	9.72E+04	4.60E+04	8.61E+06	1.49E+05	0.00E+00	7.40E+04
Cs-134	2.26E+10	3.72E+10	7.84E+09	0.00E+00	1.15E+10	4.13E+09	2.00E+08
Cs-136	1.01E+09	2.77E+09	1.79E+09	0.00E+00	1.48E+09	2.20E+08	9.74E+07
Cs-137	3.22E+10	3.09E+10	4.55E+09	0.00E+00	1.01E+10	3.62E+09	1.93E+08
Cs-138	3.98E-23	5.53E-23	3.51E-23	0.00E+00	3.89E-23	4.19E-24	2.55E-23
Ba-139	1.78E-07	9.50E-11	5.16E-09	0.00E+00	8.29E-11	5.59E-11	1.03E-05
Ba-140	1.17E+08	1.02E+05	6.82E+06	0.00E+00	3.33E+04	6.10E+04	5.92E+07
Ba-141	0.00E+00	0.00E+00	0.00E+00	0.00E+00	0.00E+00	0.00E+00	0.00E+00
Ba-142	0.00E+00	0.00E+00	0.00E+00	0.00E+00	0.00E+00	0.00E+00	0.00E+00
La-140	1.94E+01	6.80E+00	2.29E+00	0.00E+00	0.00E+00	0.00E+00	1.89E+05
La-142	4.07E-11	1.30E-11	4.06E-12	0.00E+00	0.00E+00	0.00E+00	2.57E-06
Ce-141	2.19E+04	1.09E+04	1.62E+03	0.00E+00	4.78E+03	0.00E+00	1.36E+07
Ce-143	1.87E+02	1.02E+05	1.47E+01	0.00E+00	4.26E+01	0.00E+00	1.49E+06
Ce-144	1.62E+06	5.09E+05	8.66E+04	0.00E+00	2.82E+05	0.00E+00	1.33E+08
Pr-143	7.18E+02	2.16E+02	3.56E+01	0.00E+00	1.17E+02	0.00E+00	7.75E+05
Pr-144	0.00E+00	0.00E+00	0.00E+00	0.00E+00	0.00E+00	0.00E+00	0.00E+00
Nd-147	4.45E+02	3.60E+02	2.79E+01	0.00E+00	1.98E+02	0.00E+00	5.70E+05
W-187	2.91E+04	1.72E+04	7.73E+03	0.00E+00	0.00E+00	0.00E+00	2.42E+06
Np-239	1.73E+01	1.24E+00	8.73E-01	0.00E+00	3.59E+00	0.00E+00	9.19E+04
K-40	0.00E+00	0.00E+00	0.00E+00	0.00E+00	0.00E+00	0.00E+00	0.00E+00
Co-57	0.00E+00	3.84E+06	7.77E+06	0.00E+00	0.00E+00	0.00E+00	3.14E+07
Sr-85	0.00E+00	0.00E+00	0.00E+00	0.00E+00	0.00E+00	0.00E+00	0.00E+00
Y-88	0.00E+00	0.00E+00	0.00E+00	0.00E+00	0.00E+00	0.00E+00	0.00E+00
Nb-94	0.00E+00	0.00E+00	0.00E+00	0.00E+00	0.00E+00	0.00E+00	0.00E+00
Nb-97	1.46E-11	2.63E-12	1.23E-12	0.00E+00	2.92E-12	0.00E+00	8.12E-07
Cd-109	0.00E+00	0.00E+00	0.00E+00	0.00E+00	0.00E+00	0.00E+00	0.00E+00
Sn-113	0.00E+00	0.00E+00	0.00E+00	0.00E+00	0.00E+00	0.00E+00	0.00E+00
Ba-133	0.00E+00	0.00E+00	0.00E+00	0.00E+00	0.00E+00	0.00E+00	0.00E+00
Te-134	3.77E-18	1.70E-18	2.26E-18	2.98E-18	1.57E-17	0.00E+00	1.72E-17
Ce-139	0.00E+00	0.00E+00	0.00E+00	0.00E+00	0.00E+00	0.00E+00	0.00E+00
Hg-203	0.00E+00	0.00E+00	0.00E+00	0.00E+00	0.00E+00	0.00E+00	0.00E+00

Table 3-12d

INFANT GRASS/COW/MILK PATHWAY Ri(C)

m^2 * mrem/yr per uCi/sec (H-3: mrem/yr per uCi/m^3)

Isotope	BONE	LIVER	TOT BODY	THYROID	KIDNEY	LUNG	GILLI
H-3	0.00E+00	2.38E+03	2.38E+03	2.38E+03	2.38E+03	2.38E+03	2.38E+03
Be-7	1.43E+04	3.00E+04	1.59E+04	0.00E+00	2.12E+04	0.00E+00	7.05E+05
Na-24	1.54E+07	1.54E+07	1.54E+07	1.54E+07	1.54E+07	1.54E+07	1.54E+07
P-32	1.60E+11	9.43E+09	6.21E+09	0.00E+00	0.00E+00	0.00E+00	2.17E+09
Cr-51	0.00E+00	0.00E+00	1.61E+05	1.05E+05	2.30E+04	2.05E+05	4.70E+06
Mn-54	0.00E+00	3.90E+07	8.84E+06	0.00E+00	8.64E+06	0.00E+00	1.43E+07
Mn-56	0.00E+00	3.14E-02	5.42E-03	0.00E+00	2.70E-02	0.00E+00	2.85E+00
Fe-55	1.35E+08	8.73E+07	2.33E+07	0.00E+00	0.00E+00	4.27E+07	1.11E+07
Fe-59	2.24E+08	3.92E+08	1.54E+08	0.00E+00	0.00E+00	1.16E+08	1.87E+08
Co-58	0.00E+00	2.42E+07	6.05E+07	0.00E+00	0.00E+00	0.00E+00	6.04E+07
Co-60	0.00E+00	8.82E+07	2.08E+08	0.00E+00	0.00E+00	0.00E+00	2.10E+08
Ni-63	3.49E+10	2.16E+09	1.21E+09	0.00E+00	0.00E+00	0.00E+00	1.07E+08
Ni-65	3.50E+00	3.97E-01	1.80E-01	0.00E+00	0.00E+00	0.00E+00	3.02E+01
Cu-64	0.00E+00	1.86E+05	8.59E+04	0.00E+00	3.14E+05	0.00E+00	3.81E+06
Zn-65	5.55E+09	1.90E+10	8.78E+09	0.00E+00	9.23E+09	0.00E+00	1.61E+10
Zn-69	5.00E-11	9.00E-11	6.70E-12	0.00E+00	3.74E-11	0.00E+00	7.34E-09
Br-83	0.00E+00	0.00E+00	9.34E-01	0.00E+00	0.00E+00	0.00E+00	0.00E+00
Br-84	0.00E+00	0.00E+00	1.26E-22	0.00E+00	0.00E+00	0.00E+00	0.00E+00
Br-85	0.00E+00	0.00E+00	0.00E+00	0.00E+00	0.00E+00	0.00E+00	0.00E+00
Rb-86	0.00E+00	2.23E+10	1.10E+10	0.00E+00	0.00E+00	0.00E+00	5.69E+08
Rb-88	0.00E+00	0.00E+00	0.00E+00	0.00E+00	0.00E+00	0.00E+00	0.00E+00
Rb-89	0.00E+00	0.00E+00	0.00E+00	0.00E+00	0.00E+00	0.00E+00	0.00E+00
Sr-89	1.26E+10	0.00E+00	3.61E+08	0.00E+00	0.00E+00	0.00E+00	2.59E+08
Sr-90	1.22E+11	0.00E+00	3.10E+10	0.00E+00	0.00E+00	0.00E+00	1.52E+09
Sr-91	2.72E+05	0.00E+00	9.83E+03	0.00E+00	0.00E+00	0.00E+00	3.21E+05
Sr-92	4.64E+00	0.00E+00	1.72E-01	0.00E+00	0.00E+00	0.00E+00	5.00E+01
Y-90	6.80E+02	0.00E+00	1.82E+01	0.00E+00	0.00E+00	0.00E+00	9.39E+05
Y-91m	5.67E-19	0.00E+00	1.93E-20	0.00E+00	0.00E+00	0.00E+00	1.89E-15
Y-91	7.33E+04	0.00E+00	1.95E+03	0.00E+00	0.00E+00	0.00E+00	5.25E+06
Y-92	5.38E-04	0.00E+00	1.51E-05	0.00E+00	0.00E+00	0.00E+00	1.03E+01
Y-93	2.16E+00	0.00E+00	5.87E-02	0.00E+00	0.00E+00	0.00E+00	1.70E+04
Zr-95	6.80E+03	1.66E+03	1.18E+03	0.00E+00	1.79E+03	0.00E+00	8.26E+05
Zr-97	4.06E+00	6.97E-01	3.18E-01	0.00E+00	7.03E-01	0.00E+00	4.45E+04
Nb-95	5.94E+05	2.45E+05	1.41E+05	0.00E+00	1.75E+05	0.00E+00	2.06E+08
Mo-99	0.00E+00	2.08E+08	4.05E+07	0.00E+00	3.11E+08	0.00E+00	6.85E+07
Tc-99m	2.75E+01	5.67E+01	7.30E+02	0.00E+00	6.10E+02	2.96E+01	1.65E+04
Tc-101	0.00E+00	0.00E+00	0.00E+00	0.00E+00	0.00E+00	0.00E+00	0.00E+00
Ru-103	8.67E+03	0.00E+00	2.90E+03	0.00E+00	1.80E+04	0.00E+00	1.05E+05
Ru-105	8.05E-03	0.00E+00	2.71E-03	0.00E+00	5.92E-02	0.00E+00	3.20E+00
Ru-106	1.90E+05	0.00E+00	2.38E+04	0.00E+00	2.25E+05	0.00E+00	1.44E+06
Ag-110m	3.86E+08	2.82E+08	1.86E+08	0.00E+00	4.03E+08	0.00E+00	1.46E+10
Sb-122	2.51E+06	4.59E+04	7.31E+05	3.75E+04	0.00E+00	1.30E+06	9.13E+07
Sb-124	2.09E+08	3.08E+06	6.49E+07	5.56E+05	0.00E+00	1.31E+08	6.46E+08
Sb-125	1.50E+08	1.45E+06	3.08E+07	1.87E+05	0.00E+00	9.38E+07	1.99E+08

Table 3-12d

INFANT GRASS/COW/MILK PATHWAY Ri(C)

m^2 * mrem/yr per uCi/sec (H-3: mrem/yr per uCi/m^3)

Isotope	BONE	LIVER	TOT BODY	THYROID	KIDNEY	LUNG	GILLI
Te-125m	1.51E+08	5.04E+07	2.04E+07	5.07E+07	0.00E+00	0.00E+00	7.18E+07
Te-127m	4.21E+08	1.40E+08	5.10E+07	1.22E+08	1.04E+09	0.00E+00	1.70E+08
Te-127	6.32E+03	2.12E+03	1.36E+03	5.14E+03	1.54E+04	0.00E+00	1.33E+05
Te-129m	5.57E+08	1.91E+08	8.58E+07	2.14E+08	1.39E+09	0.00E+00	3.33E+08
Te-129	2.72E-09	9.37E-10	6.35E-10	2.28E-09	6.77E-09	0.00E+00	2.17E-07
Te-131m	3.38E+06	1.36E+06	1.12E+06	2.75E+06	9.35E+06	0.00E+00	2.29E+07
Te-131	3.43E-32	1.27E-32	9.62E-33	3.06E-32	8.76E-32	0.00E+00	1.38E-30
Te-132	2.11E+07	1.04E+07	9.75E+06	1.54E+07	6.53E+07	0.00E+00	3.87E+07
I-130	3.55E+06	7.81E+06	3.13E+06	8.75E+08	8.58E+06	0.00E+00	1.67E+06
I-131	2.72E+09	3.20E+09	1.41E+09	1.05E+12	3.74E+09	0.00E+00	1.14E+08
I-132	1.43E+00	2.90E+00	1.03E+00	1.36E+02	3.24E+00	0.00E+00	2.35E+00
I-133	3.63E+07	5.28E+07	1.55E+07	9.60E+09	6.21E+07	0.00E+00	8.93E+06
I-134	1.76E-11	3.60E-11	1.28E-11	8.40E-10	4.03E-11	0.00E+00	3.73E-11
I-135	1.12E+05	2.23E+05	8.14E+04	2.00E+07	2.49E+05	0.00E+00	8.08E+04
Cs-134	3.65E+10	6.80E+10	6.87E+09	0.00E+00	1.75E+10	7.18E+09	1.85E+08
Cs-136	1.97E+09	5.79E+09	2.16E+09	0.00E+00	2.31E+09	4.72E+08	8.80E+07
Cs-137	5.15E+10	6.02E+10	4.27E+09	0.00E+00	1.62E+10	6.55E+09	1.88E+08
Cs-138	8.39E-23	1.36E-22	6.61E-23	0.00E+00	6.80E-23	1.06E-23	2.18E-22
Ba-139	3.79E-07	2.51E-10	1.10E-08	0.00E+00	1.51E-10	1.52E-10	2.40E-05
Ba-140	2.40E+08	2.40E+05	1.24E+07	0.00E+00	5.71E+04	1.48E+05	5.91E+07
Ba-141	0.00E+00	0.00E+00	0.00E+00	0.00E+00	0.00E+00	0.00E+00	0.00E+00
Ba-142	0.00E+00	0.00E+00	0.00E+00	0.00E+00	0.00E+00	0.00E+00	0.00E+00
La-140	4.06E+01	1.60E+01	4.12E+00	0.00E+00	0.00E+00	0.00E+00	1.88E+05
La-142	8.55E-11	3.14E-11	7.51E-12	0.00E+00	0.00E+00	0.00E+00	5.33E-06
Ce-141	4.34E+04	2.64E+04	3.11E+03	0.00E+00	8.15E+03	0.00E+00	1.37E+07
Ce-143	3.97E+02	2.63E+05	3.00E+01	0.00E+00	7.67E+01	0.00E+00	1.54E+06
Ce-144	2.33E+06	9.52E+05	1.30E+05	0.00E+00	3.85E+05	0.00E+00	1.33E+08
Pr-143	1.49E+03	5.55E+02	7.36E+01	0.00E+00	2.06E+02	0.00E+00	7.84E+05
Pr-144	0.00E+00	0.00E+00	0.00E+00	0.00E+00	0.00E+00	0.00E+00	0.00E+00
Nd-147	8.81E+02	9.05E+02	5.55E+01	0.00E+00	3.49E+02	0.00E+00	5.74E+05
W-187	6.12E+04	4.26E+04	1.47E+04	0.00E+00	0.00E+00	0.00E+00	2.50E+06
Np-239	3.66E+01	3.27E+00	1.85E+00	0.00E+00	6.53E+00	0.00E+00	9.46E+04
K-40	0.00E+00	0.00E+00	0.00E+00	0.00E+00	0.00E+00	0.00E+00	0.00E+00
Co-57	0.00E+00	8.95E+06	1.46E+07	0.00E+00	0.00E+00	0.00E+00	3.05E+07
Sr-85	0.00E+00	0.00E+00	0.00E+00	0.00E+00	0.00E+00	0.00E+00	0.00E+00
Y-88	0.00E+00	0.00E+00	0.00E+00	0.00E+00	0.00E+00	0.00E+00	0.00E+00
Nb-94	0.00E+00	0.00E+00	0.00E+00	0.00E+00	0.00E+00	0.00E+00	0.00E+00
Nb-97	0.00E+00	0.00E+00	0.00E+00	0.00E+00	0.00E+00	0.00E+00	0.00E+00
Cd-109	0.00E+00	0.00E+00	0.00E+00	0.00E+00	0.00E+00	0.00E+00	0.00E+00
Sn-113	0.00E+00	0.00E+00	0.00E+00	0.00E+00	0.00E+00	0.00E+00	0.00E+00
Ba-133	0.00E+00	0.00E+00	0.00E+00	0.00E+00	0.00E+00	0.00E+00	0.00E+00
Te-134	0.00E+00	0.00E+00	0.00E+00	0.00E+00	0.00E+00	0.00E+00	0.00E+00
Ce-139	0.00E+00	0.00E+00	0.00E+00	0.00E+00	0.00E+00	0.00E+00	0.00E+00
Hg-203	0.00E+00	0.00E+00	0.00E+00	0.00E+00	0.00E+00	0.00E+00	0.00E+00

Table 3-13

Total Body & Skin Ground Plane Dose Factors Ri(G) and Ri(S)

(m^2 * mrem/yr per uCi/sec)

Isotope	Decay Constant (sec^{-1})	Ri(G)	Ri(S)
H-3	1.780E-09	0.00E+00	0.00E+00
Be-7	1.505E-07	0.00E+00	0.00E+00
Na-24	1.284E-05	1.19E+07	1.39E+07
P-32	5.614E-07	0.00E+00	0.00E+00
Cr-51	2.896E-07	4.66E+06	5.51E+06
Mn-54	2.567E-08	1.39E+09	1.62E+09
Mn-56	7.467E-05	9.03E+05	1.07E+06
Fe-55	8.141E-09	0.00E+00	0.00E+00
Fe-59	1.802E-07	2.72E+08	3.20E+08
Co-58	1.133E-07	3.79E+08	4.44E+08
Co-60	4.170E-09	2.15E+10	2.53E+10
Ni-63	2.290E-10	0.00E+00	0.00E+00
Ni-65	7.641E-05	2.97E+05	3.45E+05
Cu-64	1.516E-05	6.07E+05	6.88E+05
Zn-65	3.289E-08	7.46E+08	8.58E+08
Zn-69	2.027E-04	0.00E+00	0.00E+00
Br-83	8.056E-05	4.87E+03	7.08E+03
Br-84	3.633E-04	2.03E+05	2.36E+05
Br-85	3.851E-03	0.00E+00	0.00E+00
Rb-86	4.299E-07	8.99E+06	1.03E+07
Rb-88	6.490E-04	3.31E+04	3.78E+04
Rb-89	7.600E-04	1.21E+05	1.45E+05
Sr-89	1.589E-07	2.16E+04	2.51E+04
Sr-90	7.548E-10	0.00E+00	0.00E+00
Sr-91	2.027E-05	2.15E+06	2.51E+06
Sr-92	7.105E-05	7.77E+05	8.63E+05
Y-90	3.008E-06	4.48E+03	5.30E+03
Y-91m	2.324E-04	1.00E+05	1.16E+05
Y-91	1.371E-07	1.07E+06	1.21E+06
Y-92	5.439E-05	1.80E+05	2.14E+05
Y-93	1.906E-05	1.83E+05	2.51E+05
Zr-95	1.254E-07	2.45E+08	2.84E+08
Zr-97	1.139E-05	2.96E+06	3.44E+06
Nb-95	2.282E-07	1.37E+08	1.61E+08
Mo-99	2.917E-06	3.99E+06	4.62E+06
Tc-99m	3.198E-05	1.84E+05	2.11E+05
Tc-101	8.136E-04	2.04E+04	2.26E+04
Ru-103	2.042E-07	1.08E+08	1.26E+08
Ru-105	4.337E-05	6.36E+05	7.21E+05
Ru-106	2.179E-08	4.22E+08	5.07E+08
Ag-110m	3.210E-08	3.44E+09	4.01E+09
Sb-122	2.971E-06	0.00E+00	0.00E+00
Sb-124	1.333E-07	5.98E+08	6.90E+08
Sb-125	7.935E-09	2.34E+09	2.64E+09

Table 3-13

Total Body & Skin Ground Plane Dose Factors Ri(G) and Ri(S)

(m^2 * mrem/yr per uCi/sec)

Isotope	Decay Constant (sec^{-1})	Ri(G)	Ri(S)
Te-125m	1.383E-07	1.55E+06	2.13E+06
Te-127m	7.360E-08	9.16E+04	1.08E+05
Te-127	2.059E-05	2.98E+03	3.28E+03
Te-129m	2.388E-07	1.98E+07	2.31E+07
Te-129	1.660E-04	2.62E+04	3.10E+04
Te-131m	6.418E-06	8.03E+06	9.46E+06
Te-131	4.621E-04	2.92E+04	3.45E+07
Te-132	2.462E-06	4.23E+06	4.98E+06
I-130	1.558E-05	5.51E+06	6.69E+06
I-131	9.978E-07	1.72E+07	2.09E+07
I-132	8.371E-05	1.25E+06	1.46E+06
I-133	9.257E-06	2.45E+06	2.98E+06
I-134	2.196E-04	4.47E+05	5.30E+05
I-135	2.913E-05	2.53E+06	2.95E+06
Cs-134	1.066E-08	6.86E+09	8.00E+09
Cs-136	6.124E-07	1.50E+08	1.70E+08
Cs-137	7.327E-10	1.03E+10	1.20E+10
Cs-138	3.588E-04	3.59E+05	4.10E+05
Ba-139	1.397E-04	1.05E+05	1.19E+05
Ba-140	6.297E-07	2.04E+07	2.34E+07
Ba-141	6.323E-04	4.17E+04	4.75E+04
Ba-142	1.090E-03	4.44E+04	5.06E+04
La-140	4.781E-06	1.92E+07	2.18E+07
La-142	1.249E-04	7.36E+05	8.84E+05
Ce-141	2.468E-07	1.37E+07	1.54E+07
Ce-143	5.835E-06	2.31E+06	2.63E+06
Ce-144	2.822E-08	6.95E+07	8.04E+07
Pr-143	5.916E-07	0.00E+00	0.00E+00
Pr-144	6.685E-04	1.83E+03	2.11E+03
Nd-147	7.306E-07	8.39E+06	1.01E+07
W-187	8.056E-06	2.36E+06	2.74E+06
Np-239	3.399E-06	1.71E+06	1.98E+06
K-40	1.717E-17	0.00E+00	0.00E+00
Co-57	2.961E-08	1.88E+08	2.07E+08
Sr-85	1.237E-07	0.00E+00	0.00E+00
Y-88	7.523E-08	0.00E+00	0.00E+00
Nb-94	1.083E-12	0.00E+00	0.00E+00
Nb-97	1.602E-04	1.76E+05	2.07E+05
Cd-109	1.729E-08	0.00E+00	0.00E+00
Sn-113	6.970E-08	0.00E+00	0.00E+00
Ba-133	2.047E-09	0.00E+00	0.00E+00
Te-134	2.764E-04	2.22E+04	2.66E+04
Ce-139	5.828E-08	0.00E+00	0.00E+00
Hg-203	1.722E-07	0.00E+00	0.00E+00

4.0 TOTAL DOSE DETERMINATIONS

4.1 40CFR190 Dose Evaluation

Per RECS D3.4, the direct radiation component for potential offsite dose is routinely determined and reported, along with doses from effluent. Radiological Support has determined bounding calculations (using References 26 through 29) as follows:

Direct Radiation Dose = VC + IRWSF + SGM + ISFSI + RMHAs

where;

VC	=	The Vapor Containment structures
IRWSF	=	The Interim Radioactive Waste Storage Facility
SGM	=	The Steam Generator Mausoleums (both units)
ISFSI	=	The Dry Cask Storage Facility, once active
RMHA	=	Radioactive Material Handling Areas, as posted, summed

Other structures or tanks are included as determined by Rad Support. The calculations in References 26 through 29 were performed in order to meet the requirements of the annual effluent report, and NRC Generic Letter 81-38, 11/10/1981, Storage of Low-Level Radioactive Wastes at Power Reactor Sites.

> "Offsite doses from onsite storage must be sufficiently low to account for other uranium fuel cycle sources (e.g., an additional dose of <1 mrem/year is not likely to cause the limits of 40 CFR 190 to be exceeded). On site dose limits will be controlled per 10CFR20..."

The IRWSF, SGM, and RMHAs fence line dose rates are limited by department procedures to keep dose rates at the SITE BOUNDARY fence < 1 mrem/yr based on calculations performed in References 26 through 29. These calculations contain realistic occupancy factors for the SITE BOUNDARY fence and the nearest neighbor.

ISFSI dose rate calculations and specification are bounded by a conservatively applied maximum annual dose of 17 mrem at the site boundary. This special bounding criteria ensure that combined offsite doses (effluent and direct shine) are in compliance with 40CFR190.

4.2 Doses From Liquid Releases

Doses to real individuals can be determined with the same (maximum individual) methodology described in the ODCM, but with more realistic assumptions with regard to dilution, diet, and occupenncy. Actual radionuclide concentrations in foodstuffs can be applied per the Radiological Environmental Monitoring Program (REMP), such that more accurate doses are determined from actual intakes, rather than models only.

4.3 Doses From Atmospheric Releases

Similarly, real individual methodology can be substituted for maximum individual modeling for airborne releases. Specific dose transfer factors can be used in lieu of weighted dose transfer factors. Information on the location and occupancy of real individuals, as well as more precise meteorological information and the consumption of foodstuffs, can be employed to re-calculate more accurate doses. The REMP can also provide actual concentrations to apply for a more accurate determination than modeling alone.

Data from the land use census can be used to either extend times from food production to consumption, or otherwise show that the exposure of the critical receptors is reduced.

Also, estimates of direct exposure through calculation may be supplanted by REMP results, since these are often more indicative of the true impact at specific locations. Default values used in NUREG-0133 and Reg Guide 1.109 methodology can be supplanted by more specific values if there has been sufficient science and pedigree involved in their determination.

4.4 Doses to MEMBERS OF THE PUBLIC Visiting the Site

Per the RECS Bases, and the discussion regarding gaseous effluent dose rate, visiting MEMBERS OF THE PUBLIC will receive negligible dose from plant effluents, as calculated per ODCM Part II, Sections 3.3.3 and 3.3.4, due the application of multiplicative occupancy factors. These factors are determined by comparing the expected hours on site to 8760 hours (the number of hours in a year, which is used in the calculations demonstrated in Sections 3.3.3 and 3.3.4). Examples of these calculations are as follows:

example 1: Several students visit the site for an 8-hour guided tour.
Their occupancy factor is: 8 / 8760 or **.0009**.

example 2: A man drives his wife to work and drops her off at the security gate each morning, with a total stay-time on site for 2 minutes per day. His occupancy factor is calculated as follows:

2 min/60 min per hour =.0333 hr ; 0.0333 / 8760 = **3.8E-6**

These factors, when multiplied by doses calculated per Sections 3.3.3 and 3.3.4, demonstrate that dose to these MEMBERS OF THE PUBLIC is negligible, despite any potential reduction in the atmospheric dispersion.

5.0 LOWER LIMIT OF DETECTION (LLD)

The LLD is the smallest concentration of radioactive material in a sample that will be detected with 95% probability with 5% probability of falsely concluding that a blank observation represents a "real" signal.

For a particular measurement system (which may include radiochemical separation):

$$LLD = \frac{\frac{2.71}{T_s} + 3.29\, s_b * \sqrt{1 + (\frac{T_b}{T_s})}}{E * V * k * Y * e^{-\lambda t}}$$

where:

LLD = The lower limit of detection as defined above (as picocurie per unit mass or volume)

T_s = The sample counting time in minutes

s_b = The standard deviation of the background counting rate or of the counting rate of a blank sample as appropriate (as counts per minute)

T_b = The background count time in minutes

E = The counting efficiency (as counts per transformation)

V = The sample size (in units of mass or volume)

k = A constant for the number of transformations per minute per unit of activity (normally, 2.22E+6 dpm per μCi)

Y = The fractional radiochemical yield (when applicable)

λ = The radioactive decay constant for the particular radionuclide

t = The elapsed time between midpoint of sample collection and time of counting

Note: The above LLD formula accounts for differing background and sample count times. The Radiological Environmental Monitoring Program, REMP, uses an LLD formula that assumes equal background and sample count times, in accordance with the RECS. When the above LLD formula is more appropriate for the effluents program, it may be used.

The constants 2.71 and 3.29 and the general LLD equation were derived from the following two sources:

1) Currie, L.A. "Limits for Qualitative Detection of Quantitative Determination". (Anal. Chem. 40:586-593, 1968); and,

2) Mayer, Dauer "Application of Systematic Error Bounds to Detection Limits for Practical Counting". (HP Journal 65(1): 89-91, 1993)

The value of Sb used in the calculation of the LLD for a detection system shall be based on the actual observed variance of the background counting rate or of the counting rate of the blank samples (as appropriate) rather than on an unverified theoretically predicted variance. In calculating the LLD for a radionuclide determined by gamma ray spectrometry, the background shall include the typical contributions of other radionuclides normally present in the samples. Typical values of E, V, Y, and t shall be used in the calculation. The background count rate is calculated from the background counts that are determined to be within ± one FWHM (Full-Width-at-Half-Maximum) energy band about the energy of the gamma ray peak used for the quantitative analysis for that radionuclide.

It should be recognized that the LLD is defined as an a priori (before the fact) limit representing the capability of a measurement process and not as an a posteriori (after the fact) limit for a particular measurement.

To handle the a posteriori problem, a decision level must be defined, which has been identified as the Critical Level. Following an experimental observation, one must decide whether or not a real signal was, in fact, detected. This type of binary qualitative decision is subject to two kinds of error: deciding that the radioactive material is present when it is not (a: Type I error), and the converse, failing to decide that it is present when it is (b: Type II error). The maximum acceptable Type I error (a), together with the standard deviation, Snet, of the net signal when the net signal equals zero, establish the Critical Level, Lc, upon which decisions may be based.

Operationally, an observed signal, S, must exceed L_c to yield the decision, detected.

$$L_c = k_a s_b (1+T_b/T_s)^{0.5}$$

where:

k_a is related to the standardized normal distribution and corresponds to a probability level of 1-a. For instance, selection of a = 0.01 corresponds to a 99% confidence level that activity is present. When determining the Lc for different measurement processes, it is allowable to set a at less than or equal to 0.05 as long as the following condition is met:

To set a for L_c determination at less than 0.05, the equation for the LLD (which places a less than or equal to 0.05) should be employed to verify that the calculated LLD is less than or equal to the LLDs specified in the RECS. This calculation, if necessary, will be performed on a case by case basis.

REFERENCES

1. U.S. Nuclear Regulatory Commission, "Preparation of Radiological Effluent Technical Specifications for Nuclear Power Plants", USNRC Report NUREG-0133, Washington D.C. 20555, October 1978.

2. M.E. Wrenn and J. W. Lentsch, "The Fate of Gamma-Emitting Radionuclides Released into the Hudson River Estuary and an Evaluation of Their Environmental Significance", New York University Medical Center, Institute of Environmental Medicine, 1974.

3. Regulatory Guide 1.109, "Calculation of Annual Doses to Man from Routine Releases of Reactor Effluents for the Purpose of Evaluating Compliance with 10CFR50, Appendix I, Revisions 1 and 0 (original draft for information only), USNRC Washington D.C. 20555, October 1977.

4. "An Evaluation to Demonstrate the Compliance of the Indian Point Reactors with the Design Objectives of 10CFR50, Appendix I", Consolidated Edison Company of New York, Inc. and Power Authority of the State of New York, February 1977.

5. U.S. Nuclear Regulatory Commission, "XOQDOQ Program for the Meteorological Evaluation of Routine Effluent Releases at Nuclear Power Stations", USNRC Report NUREG-0324, Washington D.C. 10555, September 1977. (Later updated by NUREG CR 2919).

6. "Semi-Annual Report of Radioactivity in Solid Wastes and Releases of Radioactive Materials in Liquid and Gaseous Effluents for Indian Point Three", Power Authority of the State of New York, January 1, 1978 to June 30, 1980.

7. "Environmental Technical Specification Requirements for Indian Point Nuclear Generating Unit Number 3", Power Authority of the State of New York, December 12, 1975 (original ETSR).

8. U.S. Nuclear Regulatory Commission, "Radiological Effluent Technical Specification for PWR's", USNRC Report NUREG-0472, Washington D.C. 20555.

9. Regulatory Guide 1.113, "Estimating Aquatic Dispersion of Effluents from Accidental and Routine Reactor Releases for the Purpose of Implementing Appendix ", Revision 1, USNRC, Washington D.C. 10555, October 1977.

10. IP-SMM-CY-001, "Radioactive Effluents Control Program" (formerly AP-11 for unit 3).

11. NUREG/CR-4007, 1984, "Lower Limit of Detection: Definition and Elaboration of a Proposed Position for Radiological Effluent and Environmental Measurements".

12. New York University Medical Center, "Radioecological Studies of the Hudson River Progress Report (1986-1987)", N.Y.U. New York, New York 10016, March 1988.

13. IPI-DM-153, "Antimony Dose Factors", IPS Memorandum to M. Kerns from D. Mayer, August 8, 1988.

14. New York University Medical Center, "Radiological Studies of the Hudson River Progress Report (1987-1988)", N.Y.U. New York, New York 10016, September 1988.

15. USNRC Regulatory Guide 1.111, "Methods of Estimating Atmospheric Transport and Dispersion of Gaseous Effluents in Routine Releases from Light-Water-Cooled Reactors," U.S. Nuclear Regulatory Commission (October 1977, Rev. 1).

16. CRE Computer Code AEOLUS-3, "A Computer Code for the Determination of Atmospheric Dispersion and Deposition of Nuclear Power Plant Effluents During Continuous, Intermittent and Accident Conditions in Open-Terrain Sites, Coastal Sites and Deep-River Valleys," RAD-004, Version 1, Level 2 (June 1991).

17. CRE Engineering Calculation IP3-CALC-RAD-00001, "IP3 - Revised ODCM Atmospheric Dispersion Parameters (Multi-Year Hourly Data, Mixed-Mode Releases and Valley Effects, July 1991)," and updated reports from Entech Engineering (March 2005), by John N. Hamawi.

18. USNRC Regulatory Guide 1.23, "Onsite Meteorological Programs," U.S. Nuclear Regulatory Commission (2/17/72) (Safety Guide 23 and and proposed revision 1 to the Reg Guide).

19. USNRC Regulatory Guide 1.145, "Atmospheric Dispersion Models for Potential Accident Consequence Assessments at Nuclear Power Plants," U.S. Nuclear Regulatory Commission (August 1979).

20. D. H. Slade, Ed., "Meteorology and Atomic Energy - 1968," USAEC, TID-24190 (1968).

21. WCRE-93-157, "IP3-Annual Average Atmospheric Dispersion and Deposition factors for Ground-Level Release, December , 1993 Memorandum Hamawi to Mayer.

22 NRC Generic Letter 89-01 (Technical Specification Amendment 199) with NUREG 1301, "Offsite Dose Calculation Manual Guidance: Standard Radiological Effluent Controls for Pressurized Water Reactors."

23. Improved Technical Specifications from NUREG 1431, Amendment 205, Feb 2001.

24. ERDA 660 (ORNL-4992), "A Methodology for Calculating Radiation Doses from Radioactivity Released to the Environment ".

25. International Atomic Energy Agency, Generic Models and Parameters for Assessing the Environmental Transfer of Radionuclides from Routine Releases: Exposures of Critical Groups, Safety Series No. 57, IAEA, Vienna (1978).

26. IP3-CALC-RAD-00013, "Radiological Analysis of Site Boundary Gamma Dose from Onsite Radioactive Material Holding Areas".

27. MicroShield Manual and Calculations, Grove Engineering.

28. M020.02, Calculations for Steam Generator Storage Facility Site Boundary Dose.

29. NYPA 3899.001, Calculations for Direct Shine Dose from the Interim Radioactive Waste Storage Facility.

30. IPEC CHM-04-035, "Nuclide Mixtures for Instantaneous and Time Average Releases".

31. IPEC CHM-05-003, "Site Specific Distances to Site Boundary and Nearest Resident".

32. IPEC CHM-06-012, "Updated Ground Water Dose Evaluations", Apr 2006.

33. IPEC CHM-05-042, "Update to Initial Monitoring Well Offsite Dose Calculation", Dec 2005.

34. Indian Point Technical Specifications (all units).

35. Indian Point Final Safety Analysis Reports (all units).

36. 10CFR20, "Standards for Protection Against Radiation."

37. 40CFR190, "Environmental Rad Protection Standards for Nuclear Power Operations."

38. Regulatory Guide 1.21, "Measuring, Evaluating, and Reporting Radioactivity in Solid Wastes and Releases of Radioactive Materials in Liquid and Gaseous Effluents from Light-Water-Cooled Nuclear Power Plants."

39. G. Knoll, "Radiation Detection and Measurement," (1979)

40. TS (RS) 92-24, "Ingestion Dose Factor Methodology."

41. NPG (RS) 92-88, "Process and Effluent Monitor Energy Calibration."

42. NPG (RS) 92-97, "Effective Stack Height for Blowdown Flash Tank Vent."

43. IPEC-CHM-05-022, "Alternative Methods for Liq Rad Monitor Setpoints / Conv Factors."

44. IPEC Chemistry Department Procedures 0-CY-2730 and 0-CY-2740, Airborne and Liquid Radioactive Effluents.

45. IPEC-CHM-06-026, Reporting Levels and Lower Limits of Detection for Sr-90 in REMP.

46. IPEC-CHM-08-008, Reporting Levels and Lower Limits of Detection for Ni-63 in REMP.

APPENDIX A

SUMMARY of RADIOLOGICAL EFFLUENT CONTROLS (RECS)

	LIQUID:	***AIRBORNE:***
Dose Rate	The diluted concentration of each isotope in UNRESTRICTED AREAS is limited to ten times the ECs of 10CFR20, defined as the Maximum Permissible Concentrations (MPCw) identified per Section D1.1. The diluted concentration of dissolved or entrained noble gases is limited to 2E-4 uCi/ml.	Dose rate is limited at or beyond the SITE BOUNDARY to: • 500 mrem/yr whole body, per site, for noble gases; • 3000 mrem/yr to the skin, per site, for noble gases; • 1500 mrem/yr to any organ, per site for iodine-131, tritium, or 8 day particulates.
Cumulative Dose	Dose commitment to any member of public in UNRESTRICTED AREAS is limited to: 1) In any calendar quarter, 1.5 mrem to the total body and 5 mrem to any organ. 2) In a calendar year, 3 mrem to the total body and 10 mrem to any organ.	Air Dose at the SITE BOUNDARY is limited to: 5 mrad per quarter and 10 mrad per year for noble gases, gamma air dose; 10 mrad per quarter and 20 mrad per year for noble gases, beta air dose. Maximum Individual Dose to a Member of the Public at the nearest resident is limited to 7.5 mrem per qtr and 15 mrem per yr for Iodine, H-3, & 8 day particulates to any organ.
Dose Projection	Projection of liquid effluent doses shall be computed at least every 31 days. If projected doses exceed: 0.06 mrem total body, or 0.2 mrem critical organ, clean-up treatment systems are required to be operational and applied to future releases.	Projection of airborne effluent doses shall be computed at least every 31 days. If projected doses exceed 0.2 mrad gamma air dose, 0.4 mrad beta air dose, or 0.3 mrem to any organ at the nearest residence, clean-up treatment systems are required to be operational.

TOTAL DOSE:

(includes all effluents, plus direct shine from holding pens, or ISFSI, etc)

25 mrem/yr, all sources, whole body or any organ except thyroid,
75 mrem/yr, all sources, thyroid.

APPENDIX B
(Page 1 of 2)

UNITS 1 and 2 LIQUID EFFLUENT SIMPLIFIED FLOW DIAGRAM 6/09

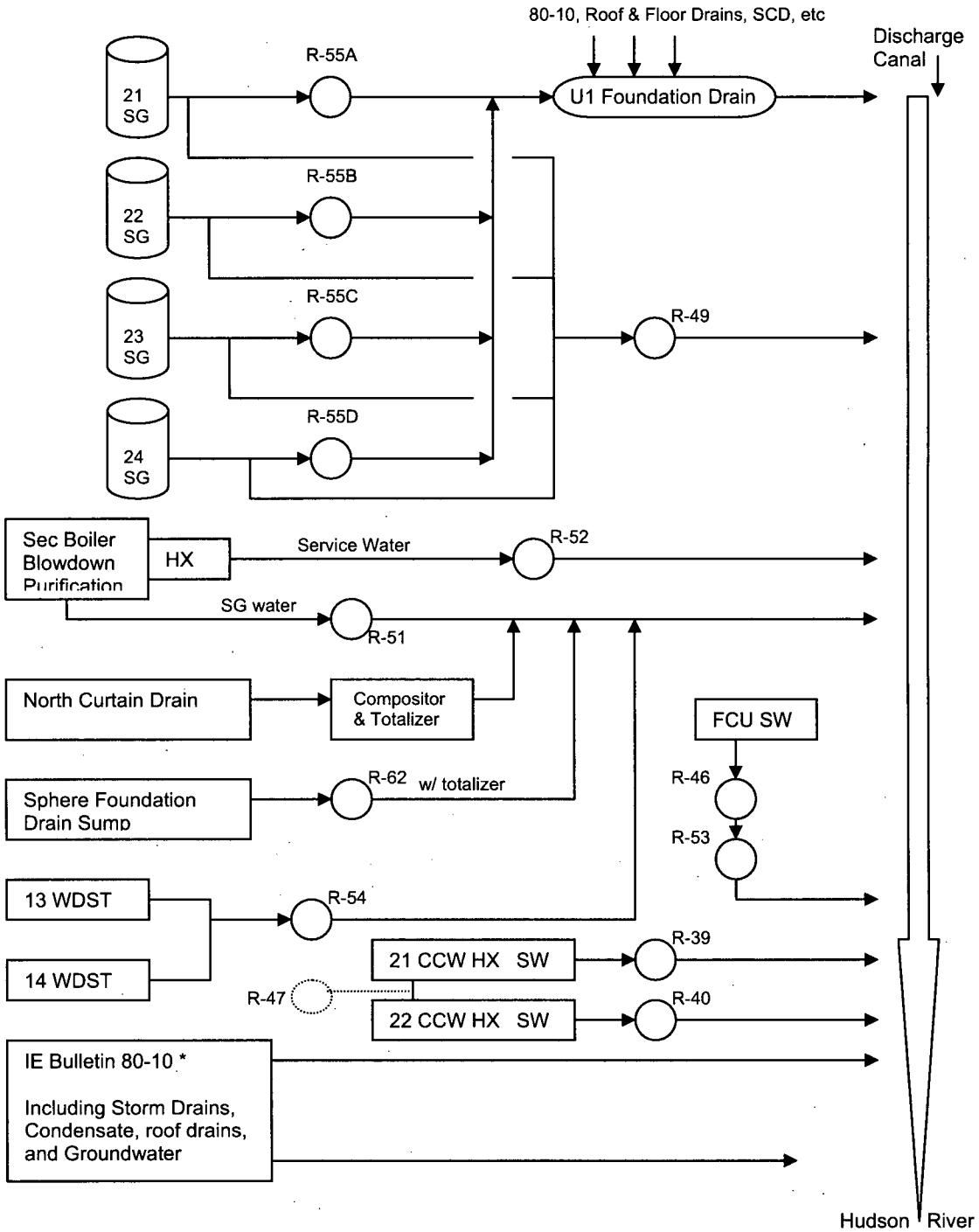

* IE Bulletin 80-10 systems include House Service Boiler Blowdown and other Aux Condensate, Service Water Return, Unit 1 Foundation Drain, Utility Tunnel Sump, etc. These and other systems are monitored per the IPEC 80-10 compliance program. Any identified effluent is evaluated for inclusion in integrated totals. 6/09

APPENDIX B
(Page 2 or 2)

UNIT 3 LIQUID EFFLUENT SIMPLIFIED FLOW DIAGRAM

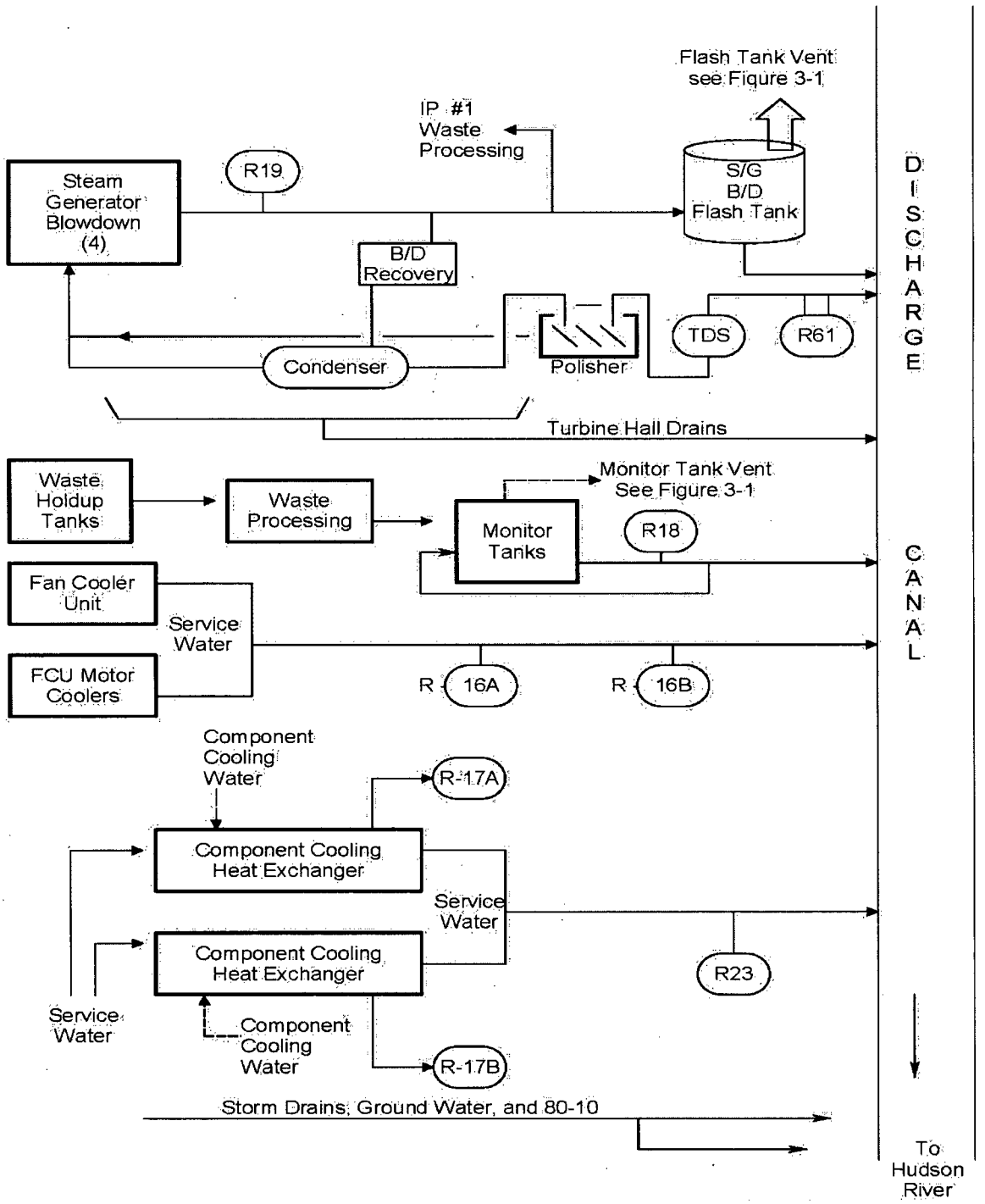

APPENDIX C
(Page 1 of 2)

UNITS 1 and 2 GASEOUS EFFLUENT SIMPLIFIED FLOW DIAGRAM

6/09

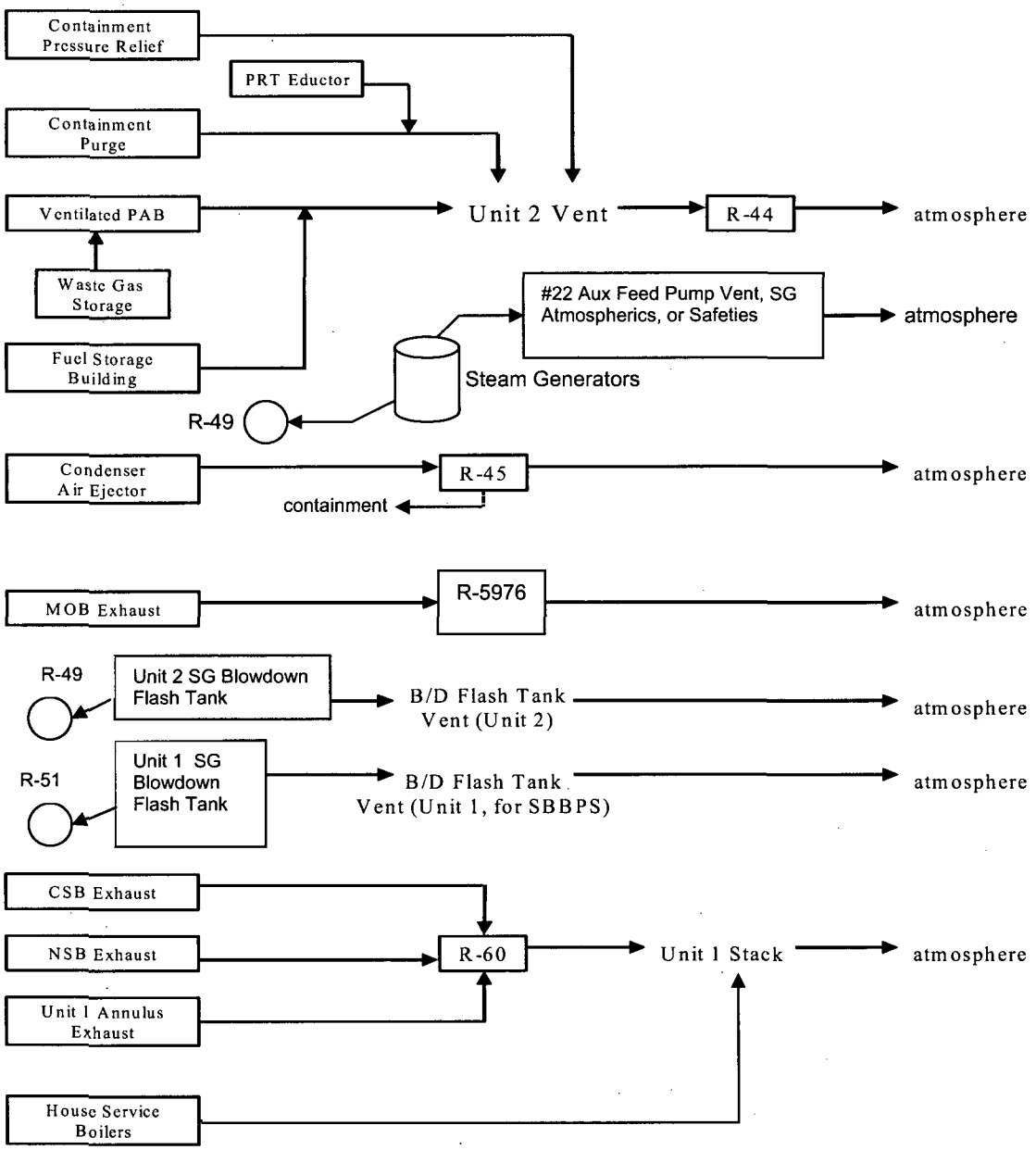

APPENDIX C
(Page 2 of 2)

UNIT 3 GASEOUS EFFLUENT SIMPLIFIED FLOW DIAGRAM

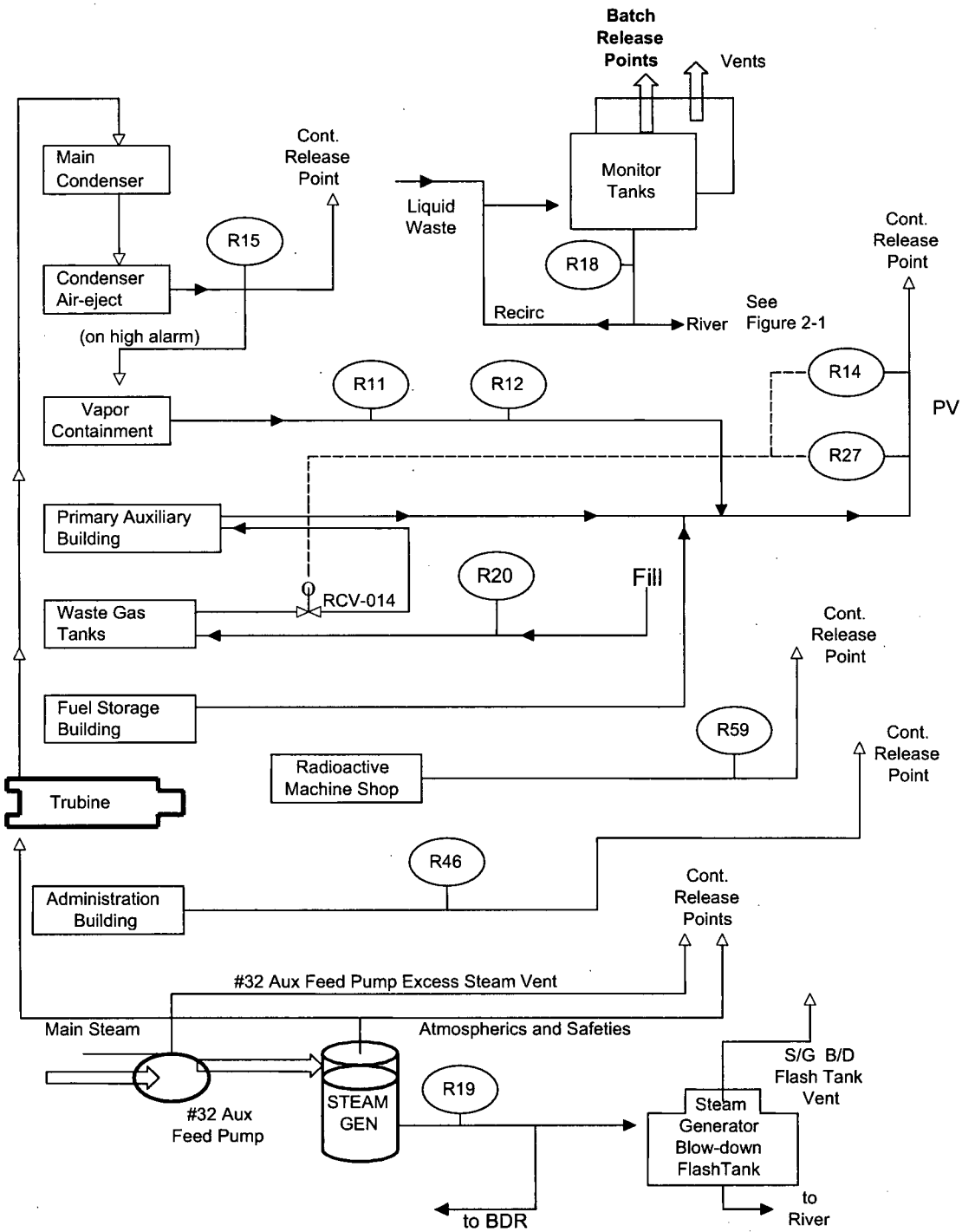

APPENDIX D

STEAM PARTITION FACTOR CALCULATION (f)

The Steam Partition Factor f for the Unit 2 flash tank vent is given by:

$$f = \frac{{}^{h}BD - 180}{970}$$

For the secondary boiler blowdown purification system flash tank, the factor f is calculated by:

$$f = \frac{{}^{h}BD - 291}{895}$$

Where;

${}^{h}BD$ is the enthalpy of blowdown liquid, as taken from SOP 15.1, "Calorimetric Thermal Power Calculation," in BTU/lbm. A typical value = 500 BTU/lbm.

180 or 291 is the enthalpy of condensed water in each flash tank, in BTU/lbm

970 or 895 is the enthalpy of associated with the latent heat of vaporization in each tank, in BTU/lbm

f = A multiplicative factor used to determine the curies of H-3 escaping the flash tank vent, as follows:

f * SGBD activity (uCi/ml) * SGBD flowrate (gpm) * 3785 ml/gal * min = uCi released from vent

(1-f) * SGBD activity (uCi/ml) * SGBD flowrate (gpm) * 3785 ml/gal * min = Liquid uCi released

APPENDIX E

ALLOWED DILUTED CONCENTRATION (ADC)

The Allowed Diluted Concentration (ADC) is derived and calculated as follows:

$$ADC = \frac{MPCWt * CG}{Total\ activity} \quad or \quad ADC = \frac{MPCWt * CG}{CG + CB} \quad or \quad ADC = \frac{MPCWt}{1 + CB/CG}$$

Where;

ADC = Allowed diluted concentration in μCi/ml

MPCWt = Maximum permissible concentration in water for all isotopes (beta & gamma), in uCi/ml, as defined in RECS D3.1.1, as follows:

$$MPCWt = \frac{\sum_i Ci}{\sum_i \left\langle Ci/MPCWi \right\rangle}$$

Where;

Ci and MPCWi = Concentration and MPCW for each isotope

CB = The concentration of the non gamma emitters, in μCi/cc

CG = The concentration of the gamma emitters in uCi/ml

Applications of ADC:

If simultaneous liquid radioactive discharges are being performed from one unit, dilution flows may need to be re-apportioned. This may be performed by allocation or by calculation. The required dilution flow is calculated as follows:

$$E = \frac{Dr * CG}{ADC}$$

where;

Dr = Current release discharge rate, gpm

E = Required dilution for current existing release(s), gpm

The permissible discharge rate is then calculated as follows:

$$D = \frac{ADC * B}{CG}$$

Where:

D = Permissible discharge rate in gal/min

B = Adjusted dilution flow (Available – E, above), in gpm

Note that when there are no other releases (E=0), B simply becomes the available dilution flow.

APPENDIX F

CONVERSION FACTORS FOR LIQUID EFFLUENT MONITORS

Monitor conversion factors are derived from circulating a representative sample (or NIST traceable fluid) through the monitor until a stable reading is obtained. The conversion factor is then determined by quantifying the uCi/cc (by gamma spectroscopy or known activity) and dividing this value by the net cpm displayed on the monitor.

Fluid may be recirculated within the monitoring system, or introduced into a closed loop, to provide elevated, stable readings on the monitor. This fluid should be representative of the expected nuclide mixture in the system, as the conversion factor is energy-dependent.

When the process fluid itself is of sufficient activity to provide this function, it is this fluid that is measured and applied to develop a typical conversion factor.

When the process fluid is usually free of contamination, NIST traceable fluid must be injected into the sample chamber to accomplish this task.

Once the sample chamber is providing a stable reading, an alequate of the fluid is measured by gamma spectroscopy to determine the average energy and the monitor's conversion factor.

Conversion Factors for effluent monitors are maintained by Chemistry and updated when standard mixtures change which would warrant an improved average energy representation.

If desired, a more robust method can be applied per Reference 43.

APPENDIX G
(Page 1 of 7)

ENVIRONMENTAL SAMPLING POINTS

SAMPLE DESIGNATION / STATION	LOCATION	DISTANCE
DR1/57	Roa Hook	2.0 mi – N
DR2/59	Old Pemart Avenue	1.8 mi – NNE
DR3/90	Charles Point	0.88 mi – NE
DR4/28	Lents Cove	0.45 mi – ENE
DR5/35	Broadway and Bleakley Avenue	0.37 mi – E
DR6/88	Reuter-Stokes Pole #6	0.32 mi – ESE
DR7/14	Water Meter House	0.3 mi – SE
DR8/03	Service Center Building	0.35 mi – SSE
DR9/34	South East Corner of Site	0.52 mi – S
DR10/05	NYU Tower	0.88 mi – SSW
DR11/53	White Beach	0.92 mi – SW
DR12/74	West Shore Drive - South	1.59 mi – WSW
DR13/76	West Shore Drive – North	1.21 mi – W
DR14/78	Rt. 9W, across from R/S #14	1.2 mi – WNW
DR15/80	Rt. 9W - South of Ayers Road	1.02 mi – NW
DR16/82	Ayers Road	1.01 mi – NNW
DR17/58	Rt. 9D – Garrison	5.41 mi – N
DR18/60	Gallows Hill Road and Sprout Brook Road	5.02 mi – NNE
DR19/62	West Brook Drive (near the Community Center)	5.03 mi – NE
DR20/64	Lincoln Road – Cortlandt (School Parking Lot)	4.6 mi – ENE
DR21/66	Croton Ave. – Cortlandt	4.87 mi – E
DR22/67	Colabaugh Pond Rd. – Cortlandt	4.5 mi – ESE
DR23/69	Mt. Airy & Windsor Road	4.97 mi – SE
DR24/92	Warren Rd. – Cortlandt	3.84 mi – SSE
DR25/71	Warren Ave. – Haverstraw	4.83 mi – S
DR26/72	Railroad Ave. & 9W Haverstraw	4.53 mi – SSW
DR27/73	Willow Grove Rd. & Captain Faldermeyer Drive	4.97 mi – SW
DR28/81	Palisades Parkway, Lake Welch Exit	4.96 mi – WSW
DR29/77	Palisades Parkway	4.15 mi – W
DR30/79	Anthony Wayne Park	4.57 mi – WNW
DR31/75	Palisades Parkway	4.65 mi – NW
DR32/83	Rt. 9W Fort Montgomery	4.82 mi – NNW
DR33/33	Hamilton Street (Substation)	2.88 mi – NE
DR34/38	Furnace Dock (Substation)	3.43 mi – SE
DR35/89	Highland Ave. & Sprout Brook Rd. (near Rock Cut)	2.89 mi – NNE
DR36/61	Lower South Street and Franklin Street	1.3 mi – NE
DR37/56	Verplanck – Broadway & 6th St.	1.25 mi – SSW
DR38/20	Cortlandt Yacht Club (aka Montrose Marina)	1.5 mi – S
DR39/29	Grassy Point	3.37 mi – SSW
DR40/23	*Roseton	20.7 mi – N
DR41/27	Croton Point	6.36 mi – SSE

* Control Station

APPENDIX G
(Page 2 of 7)

ENVIRONMENTAL SAMPLING POINTS

SAMPLE DESIGNATION/ STATION	LOCATION	DISTANCE
	Airborne	
A1/4	Algonquin Gas Line	0.28 mi – SW
A2/94	IPEC Training Center	0.39 mi – S
A3/95	Meteorological Tower	0.46 mi – SSW
A4/5	NYU Tower	0.88 mi – SSW
A5/23	*Roseton	20.7 mi – N
	Waterborne – Surface (Hudson River Water)	
Wa1/9	*Plant Inlet (Hudson River Intake)	0.16 mi – W
Wa2/10	Discharge Canal (Mixing Zone)	0.3 mi – WSW
	Waterborne – Drinking	
Wb1/7	Camp Field Reservoir	3.4 mi – NE
	Soil From Shoreline	
Wc1/53	White Beach	0.92 mi – SW
Wc2/50	*Manitou Inlet	4.48 mi – NNW

Exposure Pathway/Sample: Milk

There are no milch animals whose milk is used for human consumption within 8 km distance of Indian Point; therefore, no milk samples are taken (Ia1 – Ia4).

Exposure Pathway/Sample: Ingestion-Fish and Invertebrates

The RECS designate two required sample locations labeled Ib1/25 and Ib2/23. The downstream Ib1 location and samples will be chosen where it is likely to be affected by plant discharge. Ib2 will be a location upstream that is not likely to be affected by plant discharge. The following species along with other commercially/recreationally important species are considered acceptable:

Striped Bass	Pumpkin Seed	American Eel
Bluegill Sunfish	White Catfish	Crabs
White Perch	Blueback Herring	

Exposure Pathway/Sample: Ingestion-Food Products (Broad Leaf Vegetation)

Ic1/95	Meteorological Tower	0.46 mi - SSW
Ic2/94	IPEC Training Center	0.39 mi - S
Ic3/23	*Roseton	20.7 mi - N

*Control Station

APPENDIX G
(Page 3 of 7)

ENVIRONMENTAL SAMPLING POINTS

SAMPLE DESIGNATION/ STATION	LOCATION	DISTANCE	SAMPLE TYPES
DR8/3	Service Center Building	0.35 mi – SSE	3
A1/4	Algonquin Gas Line	0.28 mi – SW	1,2
A4, DR10/5	NYU Tower	0.88 mi – SSW	1,2,3
Wb1/7	Camp Field Reservoir	3.4 mi – NE	6
**/8	Croton Reservoir	6.3 mi - SE	6
Wa1/9	*Plant Inlet (Hudson River Intake)	0.16 mi - W	7
Wa2/10	Discharge Canal (Mixing Zone)	0.3 mi - WSW	7,8
DR7/14	Water Meter House	0.3 mi – SE	3
**/17	Off Verplanck	1.5 mi – SSW	8,9,10
DR38/20	Cortlandt Yacht Club (AKA Montrose Marina)	1.5 mi – S	3
Ib2,A5,DR40,Ic3/23	*Roseton	20.7 mi – N	1,2,3,4,5,11,12
Ib1/25	where available, downstream	N/A	12
DR41/27	Croton Point	6.36 mi – SSE	1,2,3
DR4/28	Lents Cove	0.45 mi - ENE	3,8,9,10
DR39/29	Grassy Point	3.37 mi – SSW	1,2,3
DR33/33	Hamilton Street (Substation)	2.88 mi – NE	3
DR9/34	South East Corner of Site	0.52 mi – S	3
DR5/35	Broadway & Bleakley Avenue	0.37 mi – E	3
DR34/38	Furnace Dock (Substation)	3.43 mi – SE	3
**/44	Peekskill Gas Holder Building	1.84 mi – NE	1,2,11
Wc2/50	*Manitou Inlet	4.48 mi – NNW	10
Wc1, DR11/53	White Beach	0.92 mi – SW	3,10
DR37/56	Verplanck – Broadway & 6th Street	1.25 mi - SSW	3
DR1/57	Roa Hook	2.0 mi – N	3
DR17/58	Rt. 9D Garrison	5.41 mi – N	3
DR2/59	Old Pemart Ave.	1.8 mi – NNE	3
DR18/60	Gallows Hill Road and Sprout Brook Road	5.02 mi – NNE	3
DR36/61	Lower South Street and Franklin Street	1.3 mi – NE	3
DR19/62	West Brook Drive (near the Community Center)	5.03 mi – NE	3
DR20/64	Lincoln Road – Cortlandt (School Parking Lot)	4.6 mi – ENE	3
DR21/66	Croton Ave. – Cortlandt	4.87 mi – E	3
DR22/67	Colabaugh Pond Rd. – Cortlandt	4.5 mi – ESE	3
DR23/69	Mt. Airy & Windsor Road	4.97 mi – SE	3

* Control Station

** Items are in excess of RECS requirements

APPENDIX G
(Page 4 of 7)

ENVIRONMENTAL SAMPLING POINTS

SAMPLE DESIGNATION/ STATION	LOCATION	DISTANCE	SAMPLE TYPES
DR25/71	Warren Avenue – Haverstraw	4.83 mi – S	3
DR26/72	Railroad Ave. & 9W – Haverstraw	4.53 mi – SSW	3
DR27/73	Willow Grove Rd. & Captain Faldermeyer Dr	4.97 mi – SW	3
DR12/74	West Shore Drive – South	1.59 mi – WSW	3
DR31/75	Palisades Parkway	4.65 mi – NW	3
DR13/76	West Shore Drive – North	1.21 mi – W	3
DR29/77	Palisades Parkway	4.15 mi – W	3
DR14/78	Rte. 9W, across from R/S #14	1.2 mi – WNW	3
DR30/79	Anthony Wayne Park	4.57 mi – WNW	3
DR15/80	Rte. 9W – South of Ayers Road	1.02 mi – NW	3
DR28/81	Palisades Parkway, Lake Welch Exit	4.96 mi – WSW	3
DR16/82	Ayers Road	1.01 mi – NNW	3
DR32/83	Rte. 9W – Fort Montgomery	4.82 mi – NNW	3
**/84	*Cold Spring	10.88 mi – N	8,9,10
**/85	Quality Control		6
DR6/88	Reuter-Stokes Pole #6	0.32 mi – ESE	3
DR35/89	Highland Ave. & Sprout Brook Road (near rock cut)	2.89 mi – NNE	3
DR3/90	Charles Point	0.88 mi – NE	3
DR24/92	Warren Rd. – Cortlandt	3.84 mi – SSE	3
A2, Ic2/94	IPEC Training Center	0.39 mi – S	1,2,4,5
A3, Ic1/95	Meteorological Tower	0.46 mi - SSW	1,2,4,5
GW/106	Lafarge Monitoring Well	0.63 mi – SW	13

6/09

* Control Station ** Items are in excess of RECS requirements

Sample types are:

1. Air particulates
2. Radioiodine
3. Direct gamma
4. Broadleaf vegetation
5. Soil
6. Drinking water
7. Hudson River (H.R.) water
8. H.R. bottom sediment
9. H.R. aquatic vegetation
10. H.R. shoreline soil
11. Fallout
12. Fish and invertebrates
13. Groundwater well

APPENDIX G
(Page 5 of 7)

ENVIRONMENTAL SAMPLING POINTS

SAMPLING LOCATIONS
Within Two Miles of Indian Point

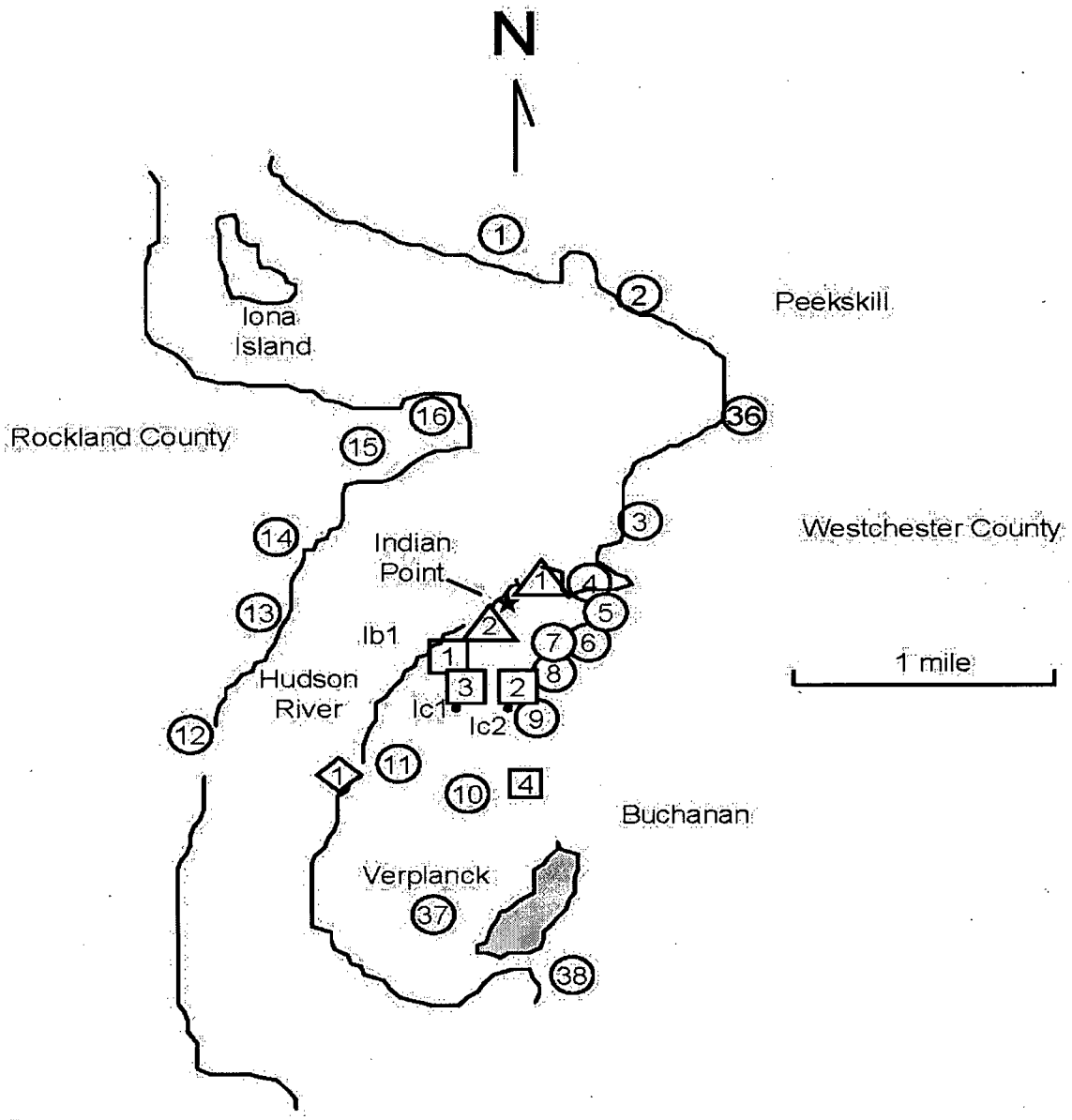

Key:

- Waterborne: Surface (HR) Wa#
- Direct Radiation Sample Location DR#
- Airborne Particulate and Radioiodine A#
- Ic# - Broadleaf Vegetation
- HR Shoreline Soil Wc#
- Ib1 - Fish and Invertebrates (where available downstream)

APPENDIX G
(Page 6 of 7)

ENVIRONMENTAL SAMPLING POINTS

SAMPLING LOCATIONS
Greater Than Two Miles from Indian Point

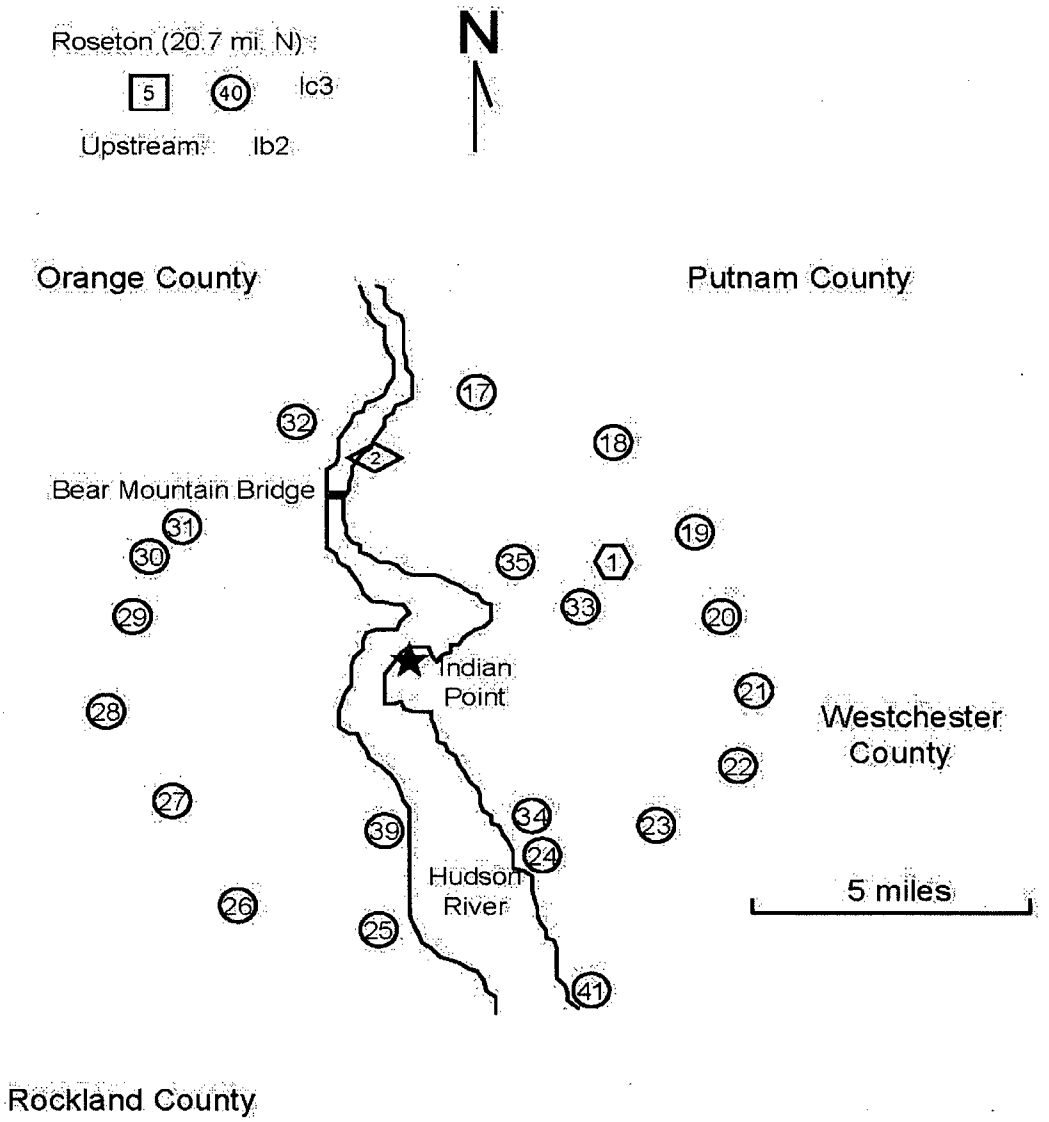

Key:
- ○ - Direct Radiation Sample Location DR#
- □ - Airborne Sampling Location A#
- ◇ - Hudson River Shoreline Soil Wc#
- Ic3 - Broadleaf Vegetation
- ⬡ - Waterborne: Drinking Wb#
- Ib2 - Fish and Invertebrates (where available upstream)

APPENDIX G
(Page 7 of 7)

ENVIRONMENTAL SAMPLING POINTS

ADDITIONAL SAMPLING LOCATIONS | 6/09

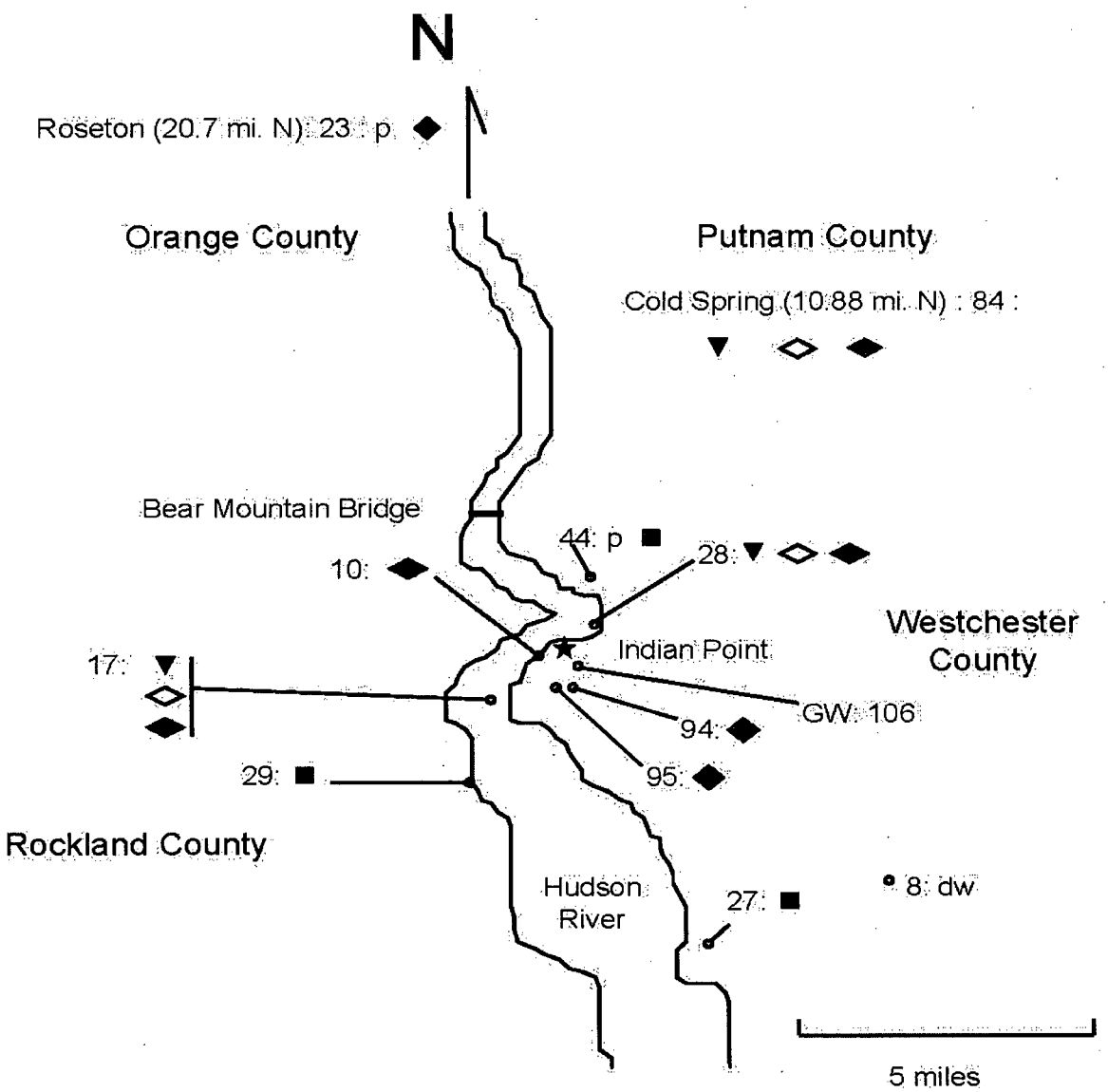

Key:
- ■ - Air Particulate & Radioiodine
- ▼ - Aquatic Vegetation
- ◆ - HR Bottom Sediment
- p - Precipitation
- dw - Drinking Water
- ◇ - HR Shoreline Soil
- ◆ - Soil
- GW - Monitoring Well, SW of Site Boundary

APPENDIX H

INTERLABORATORY COMPARISON PROGRAM

Laboratories used for analysis of samples to support the Radiological Environmental Monitoring Program (REMP) participate in an Interlaboratory Comparison Program or comparable program with an approved vendor (EPA, NIST, etc).

Samples of various media containing known activities of radionuclides are sent to participating laboratories for analyses. Results of the analyses are compared to the known values.

While laboratory results may be reported in terms of normalized deviations from a known value (generally ± 3 sigma), the results are evaluated for acceptance criteria using the NRC's standardized comparison requirements for agreement found in the site quality control procedures (as a function of resolution).

Annual results of the interlab participation, along with resolution and agreement criteria, are summarized in the Annual Environmental Operating Report.

APPENDIX I

CALCULATION OF ALLOWABLE RELEASE RATES FOR INDIAN POINT UNITS 2 and 3

Primary Assumptions:

- Units 2 and 3 effective dose factors (KLMN) are equivalent, except for unit-specific finite cloud correction factors, which represent different recirculation contribution, as required.
- For instantaneous release calculations, the default (initial) condition is for each unit to share (50-50) in the application of the site's 10CFR20 limit (converted to uCi/sec from mrem/yr).
- The following data represent long-term meteorological factors. Short term correction, if applicable, should be applied to these values, as discussed in Section 3.5, and Reference 17.

Unit 1 or 2 Release Points	Receptor	Site Boundary	Nearest Resident	5-miles Down Valley, Haverstraw
Primary Vent Releases	Concentration X/Q (sec/m^3)	2.219E-06 [SSW, 755 m]	1.030E-06 [SSW, 1574 m]	7.22E-07
	Deposition D/Q (m^{-2})	1.407E-08 [SSW, 755 m	7.517E-09 [S, 1133 m]	1.35E-09
Ground Level Releases	Concentration X/Q (sec/m^3)	2.873E-05 [SSW, 440 m]	5.158E-06 [SSW, 1374 m]	7.22E-07
	Deposition D/Q (m^{-2})	8.759E-08 [SSW, 440 m	1.878E-08 [S, 933 m]	1.35E-09

Unit 3 Release Point	Receptor	Site Boundary	Nearest Resident	5-miles Down Valley, Haverstraw
Primary Vent Releases	Concentration X/Q (sec/m^3)	4.473E-06 [SW, 350 m]	1.016E-06 [SSW, 1574 m]	7.22E-07
	Deposition D/Q (m^{-2})	2.599E-08 [SSW, 480 m]	7.451E-09 [S, 1133 m]	1.35E-09
Ground Level Releases	Concentration X/Q (sec/m^3)	6.980E-05 [SSW, 250 m]	5.158E-06 [SSW, 1374 m]	7.22E-07
	Deposition D/Q (m^{-2})	2.012E-07 [SSW, 250 m]	1.878E-08 [S, 933 m]	1.35E-09

APPENDIX I

CALCULATION OF ALLOWABLE RELEASE RATES FOR INDIAN POINT UNITS 2 and 3

Instantaneous Release Rates vs Dose Rates

Indian Point units 2 and 3 share a common site boundary limit of 500 mrem/yr. This 500 mrem/yr limit was divided between the units based upon a 50-50 split of the release rate in μCi/sec. Because each unit has its own X/Q and K-bar, equal μCi/sec discharges from each plant will result in different dose rates for each plant at the most restrictive site boundary location. In order to define the split of the 500 mrem/yr limit, IPEC units 2 and 3 must base the dose split on the mixture presented in Table 3-8.

Dose Split Between IP2 and IP3

A. Instantaneous Dose Rates and Calculation of Allowable Release Rate in uCi/sec:

i. Whole Body Dose Rate Calculations:

Given:

a) site limit is 500 mrem/yr

b) IP3 worst sector X/Q = 4.47E-6 sec/m^3

c) IP3 K-bar for instantaneous mixture = 849 $\frac{mrem \bullet m^3}{\mu Ci \bullet yr}$

d) IP2 worst sector X/Q = 2.22E-6 sec/m^3

e) IP2 K-bar for instantaneous mixture = 1507 $\frac{mrem \bullet m^3}{\mu Ci \bullet yr}$

f) $\dot{Q}$ = μCi/sec

> Note:
>
> Units 2 and 3 effective dose factors (KLMN) are equivalent, except for site-specific finite cloud correction, as defined in Table 3-8.

Solve for $\dot{Q}$:

$\dot{Q}$ [(X/Q_3) (K bar_3) + (X/Q_2) (K bar_2)] = 500 mrem/yr

$\dot{Q}$ [(4.47E-6) (849) + (2.22E-6) (1507)] = 500 mrem/yr

Therefore, without performing any specific calculations for an actual release, the default back-calculated instantaneous release rate ($\dot{Q}$) ***for either unit*** = **7.00E+4 μCi/sec.**

In other words, if both units were releasing at this rate, with the default instantaneous mixture identified in Table 3-8, IPEC would be releasing at 500 mrem/yr (the RECS and 10CFR20 release rate limit).

Since this value assumes ALL releases are included (per unit), a partitioning factor should be applied for each applicable release point when this limit is used. Should it become necessary to "borrow" from the other unit , isotopic mixtures from specific sample results should replace the dose factors used in this default calculation.

Without specific sample data, the default ***SITE*** release rate limit is then: **1.40E5 uCi/sec.**

CALCULATION OF ALLOWABLE RELEASE RATES FOR INDIAN POINT UNITS 2 and 3

ii. Skin Dose Rate Calculations:

Given:

a) site limit is 3,000 mrem/yr

b) IP3 worst sector X/Q = 4.47E-6 sec/m^3

c) IP3 (Li + 1.1 Mi) = 2306 $\frac{mrem \bullet m^3}{\mu Ci \bullet yr}$

d) IP2 X/Q for SSW sector = 2.22E-6 sec/m^3

e) IP2 (Li + 1.1 Mi) = 3071 $\frac{mrem \bullet m^3}{\mu Ci \bullet yr}$

f) $\dot{Q}$ = uCi/sec

Solve for $\dot{Q}$:

$\dot{Q}$ [$(X/Q)_3$ (Li + 1.1 $Mi)_3$ + $(X/Q)_2$ (Li + 1.1 $Mi)_2$] = 3,000 mrem/yr

$\dot{Q}$ [(4.47E-6) (2306) + (2.22E-6) (3071)] = 3,000 mrem/yr

$\dot{Q}$ = 1.75E+5 μCi/sec (less restrictive than Whole Body)

iii. Solve for WB dose rate commitments per site (with $\dot{Q}$ = 7.00E+4 uCi/sec)

Indian Point 2:

(7.00E+4 μCi/sec) (2.22E-6 sec/m^3) (1507 $\frac{mrem \bullet m^3}{\mu Ci \bullet yr}$) = **234 mrem/yr**

Indian Point 3:

(7.00E+4 μCi/sec) (4.47E-6 sec/m^3) (849 $\frac{mrem \bullet m^3}{\mu Ci \bullet yr}$) = **266 mrem/yr**

The less restrictive skin dose rate limit for each unit (information only):

Unit 2: (1.75E+5 uCi/sec) (2.22E-6 sec/m^3) (3071 $\frac{mrem \bullet m^3}{\mu Ci \bullet yr}$) = 1194 mrem/yr

Unit 3: (1.75E+5 uCi/sec) (4.47E-6 sec/m^3) (2306 $\frac{mrem \bullet m^3}{\mu Ci \bullet yr}$) = 1806 mrem/yr

APPENDIX I

CALCULATION OF ALLOWABLE RELEASE RATES FOR INDIAN POINT UNITS 2 and 3

RELEASE RATE LIMITS FOR QUARTERLY AND ANNUAL AVERAGE NOBLE GAS RELEASES

	For a Calendar Quarter	For a Calendar Year
Gamma air dose	5 mrad limit	10 mrad limit
Beta air dose	10 mrad limit	20 mrad limit

I. Assumptions:

1. Doses are delivered to the air at the site boundary.
2. Finite cloud geometry is assumed for noble gas releases at site boundary.
3. X/Q for Unit 2 = 2.22E-6 sec/m^3, ($\dot{Q}$ = release rate uCi/sec)
4. X/Q for Unit 3 = 4.47E-6 sec/m^3, ($\dot{Q}$ = release rate uCi/sec)
5. Gamma and Beta air dose factors (M and N), Corrected for finite cloud geometry (as described on Table 3-8) are as follows:

Unit 2 effective average dose factors	Unit 3 effective average dose factors	Units
$\overline{M}$ = 281	$\overline{M}$ = 181	mrad/yr per uCi/m^3
$\overline{N}$ = 1254	$\overline{N}$ = 1254	mrad/yr per uCi/m^3

II. Calculation of Quarterly Release Rates:

a) for gamma dose: ($\dot{Q}$)*[(M)(X/Q)] less than or equal to 5 mrad/qtr

b) for beta dose: ($\dot{Q}$)*[(N)(X/Q)] less than or equal to 10 mrad/qtr

		unit 2	unit 3
gamma dose rate	$\dot{Q} = \dfrac{5mrad/qtr}{(1/4yr)(M)(X/Q)}$ =	3.21E+4 μCi/sec	2.47E+4 μCi/sec
beta dose rate	$\dot{Q} = \dfrac{10mrad/qtr}{(1/4yr)(N)(X/Q)}$ =	1.44E+4 μCi/sec	7.14E+3 μCi/sec

Based on the above analysis, the beta dose is limiting for time average doses. Therefore, the allowable quarterly average release rates are 1.44E+4 μCi/sec for unit 2 and 7.14E+3 μCi/sec for unit 3.

III. Calculation of Calendar Year Release Rate

Annual limits are one half of quarterly limits. Therefore, using Beta air dose as most limiting, the maximum annual average release rates are 7.20E+3 μCi/sec for unit 2 and 3.57E+3 μCi/sec for unit 3.

CALCULATION OF ALLOWABLE RELEASE RATES FOR INDIAN POINT UNITS 2 and 3

ALLOWABLE INSTANTANEOUS RELEASE RATE for I-131 & Particulates w/ T½ > 8 DAYS)

Given: Wv(in): X/Q at the Site Boundary for IP3 = 4.47E-6 sec/m^3

Wv(in): X/Q at the Site Boundary for IP2 = 2.22E-6 sec/m^3

$$PI(c) = 1.62\ E7\ \frac{mrem/yr}{\mu Ci/m^3}$$

Assumed Pathway: Child Inhalation at Unrestricted Area Boundary

Solve the following equation for $\dot{Q}$:

[($\dot{Q}$)PI(c)(Wv(in)) Unit 3] + [($\dot{Q}$)PI(c)(Wv(in)) Unit 2] = 1500 mrem/yr

IP3: $(\dot{Q})PI(c)(Wv(in))3 = \dot{Q} * 1.62E7\ \frac{mrem/yr}{\mu Ci/m^3}\ 4.47E\text{-}6\ s/m^3 = \dot{Q} * 72.4\ \frac{mrem/yr}{\mu Ci/\sec}$

IP2: $(\dot{Q})PI(c)(Wv(in))2 = \dot{Q} * 1.62E7\ \frac{mrem/yr}{\mu Ci/m^3}\ 2.22E\text{-}6\ s/m^3 = \dot{Q} * 36.0\ \frac{mrem/yr}{\mu Ci/\sec}$

The sum equals : (108) ($\dot{Q}$) mrem/yr per uCi/sec

Limit is 1500 mrem/yr per site:

Therefore: $108 * \dot{Q}\ \frac{mrem/yr}{\mu Ci/\sec} = 1500$ mrem/yr

$\dot{Q}$ = **1.38E+1 μCi/sec** (for each unit)

IP3 Dose Contribution: $1.38E{+}1\ \frac{\mu Ci}{\sec} * 1.62E7 \frac{mrem}{yr} \frac{m^3}{\mu Ci} * 4.47E-6 \frac{\sec}{m^3}$ = 1003 mrem/yr

IP2 Dose Contribution: $1.38E{+}1\ \frac{\mu Ci}{\sec} * 1.62E7 \frac{mrem}{yr} \frac{m^3}{\mu Ci} * 2.22E-6 \frac{\sec}{m^3}$ = 497 mrem/yr

Sum = 1500 mrem/yr

(Approximately a 67 / 33 percent dose split for IP3 and IP2 respectively).

APPENDIX I

ALLOWABLE QUARTERLY and ANNUAL IODINE/PARTICULATE RELEASE RATES

DOSE LIMITS AT THE NEAREST RESIDENT

Dose factors for the child, thyroid (for Iodine 131) are used for this category as a conservative assumption since this nuclide has the highest thyroid dose factor of all iodines and particulates, and its most significant effect in on the child age group. The H-3 dose factor is about 4 orders of magnitude less significant and its contribution to the total dose is considered negligible.

The back-calculated release rate for Iodine and Particulate is as follows:

	Unit 2	Unit 3
X/Q (in sec/m^3 at the nearest resident)	1.03E-6	1.02E-6
D/Q (in m^{-2} at the nearest resident)	7.52E-9	7.45E-9

RI(c) = 1.62E+7 $\frac{mrem/yr}{\mu Ci/m^3}$, child thyroid inhalation dose factor for I-131 (for both units)

RG = 1.72E+7 m^2 $\frac{mrem/yr}{\mu Ci/\sec}$, ground plane dose factor for I-131 (for both units)

RV(c) = 4.75E+10 m^2 $\frac{mrem/yr}{\mu Ci/\sec}$, child thyroid vegetation dose factor for I-131 (for both units)

Calculating the allowable time average release rate by solving the following equation for $\dot{Q}$:

$\dot{Q}$ [(RIc)(X/Q) + (RG)(D/Q) + (RVc)(D/Q)] = limit in mrem/yr

	Unit 2	Unit 3
$\dot{Q}$ (RIc)(X/Q) in mrem/yr per uCi/sec =	16.7 * $\dot{Q}$	16.5 * $\dot{Q}$
$\dot{Q}$ (RG) (D/Q) in mrem/yr per uCi/sec =	0.129 * $\dot{Q}$	0.128 * $\dot{Q}$
$\dot{Q}$ (RVc)(D/Q) in mrem/yr per uCi/sec =	357 * $\dot{Q}$	354 * $\dot{Q}$
The sum for each unit (X * $\dot{Q}$) in mrem/yr per uCi/sec.	**374** * $\dot{Q}$	**371** * $\dot{Q}$

Quarterly time average limit is 7.5 mrem to any organ (or 30 mrem/yr). Solving for $\dot{Q}$ yields:

		(Quarterly Limit)	**(Annual Limit)**
(IP2)	$\dot{Q}$ * 374 $\frac{mrem/yr}{\mu Ci/\sec}$ = 30 mrem/yr;	8.02E-2 μCi/sec	4.01E-2 μCi/sec
(IP3)	$\dot{Q}$ * 371 $\frac{mrem/yr}{\mu Ci/\sec}$ = 30 mrem/yr;	8.10E-2 μCi/sec	4.05E-2 μCi/sec

(Annual limits are ½ quarterly limits, or 15 mrem to any organ/yr)

APPENDIX I

ALLOWABLE QUARTERLY and ANNUAL IODINE/PARTICULATE RELEASE RATES

DOSE LIMITS AT THE 5-MILE SECONDARY RECEPTOR (when applied)

Dose factors for the infant, thyroid (for Iodine 131) are used for this category as a conservative assumption since this nuclide has the highest thyroid dose factor of all iodines and particulates, and its most significant effect is on the infant age group at this location. When applied (as required by the applicable current Land Use Census), this pathway may be approximately four times more limiting than the Primary Receptor. The back-calculated release rate for Iodine and Particulate are as follows:

	Units 2 or 3
X/Q (in sec/m^3 at 5-miles down valley)	7.22E-7
D/Q (in m^{-2} at 5-miles down valley)	1.35E-9

RI(i) = 1.48E+7 $\frac{mrem/yr}{\mu Ci/m^3}$, infant thyroid inhalation dose factor for I-131 (for both units)

RG = 2.10E+7 m^2 $\frac{mrem/yr}{\mu Ci/\sec}$, ground plane dose factor for I-131 (for both units)

RC(i) = 1.05E+12 m^2 $\frac{mrem/yr}{\mu Ci/\sec}$, infant thyroid cow-milk dose factor for I-131 (for both units)

(there is no vegetative pathway for the infant)

Calculating the allowable time average release rate by solving the following equation for $\dot{Q}$:

$\dot{Q}$ [(RIi)(X/Q) + (RG)(D/Q) + (RCi)(D/Q)] = limit in mrem/yr

	Units 2 or 3
$\dot{Q}$ (RIi)(X/Q) in mrem/yr per uCi/sec =	10.7 * $\dot{Q}$
$\dot{Q}$ (RG) (D/Q) in mrem/yr per uCi/sec =	0.028 * $\dot{Q}$
$\dot{Q}$ (RCi)(D/Q) in mrem/yr per uCi/sec =	1412 * $\dot{Q}$
The sum for each unit (X * $\dot{Q}$) in mrem/yr per uCi/sec.	**1428** * $\dot{Q}$

Quarterly time average limit is 7.5 mrem to any organ (or 30 mrem/yr).

Solving for $\dot{Q}$ yields the following limits, at either unit:

	(Quarterly Limit)	**(Annual Limit)**
$\dot{Q}$ * 1428 $\frac{mrem/yr}{\mu Ci/\sec}$ = 30 mrem/yr;	2.10E-2 μCi/sec	1.05E-2 μCi/sec

(Annual limits are ½ quarterly limits, or 15 mrem to any organ/yr)

APPENDIX J

GROUNDWATER FLOW AND OFFSITE DOSE CALCULATION DETAILS

Overview:

Site hydrologists have verified the overall direction of groundwater flow at IPEC to be ultimately into the Hudson River. From this established understanding, two independent models are applied to determine groundwater flowrates from the site into the river, the precipitation mass balance and the Darcy's Law models.

The precipitation mass balance model applied prior to 2007 was enhanced and further validated for 2007 and beyond by a calibration process involving the Darcy's Law model. A total of six zones on site (described below) are evaluated to better partition the distribution of flow across the site. Each zone was also further subdivided into a shallow flow regime and a deeper flow regime based on the depth-specific differences in formation hydraulic conductivity. In addition, the groundwater flow values before and after the Discharge Canal were computed and compared to estimate the amount of groundwater flowing into the canal as well as that discharging directly to the river. The overall precipitation mass balance model was also validated through calibration against a Darcy's Law model relative to groundwater flow through each zone. This calibration was also used to provide the basis for the depth specific and pre-canal/post-canal differentiation of flow values in each zone.

The concentrations at groundwater to surface water discharge points were updated using wells specifically drilled at these points for a more accurate assessment of the plume boundaries, limits and release concentrations. Average concentrations are used, and based on multiple samples, generally at least one per quarter per elevation per well. The additional wells, and the instrumentation installed therein, also provides further definition of groundwater elevations to enhance the Darcy's Law calibration of the precipitation mass balance model. The hydrology portion of the final model was produced by IPEC's hydrological consultant, GZA GeoEnvironmental, Inc. The specific processes for release and dilution flow evaluation are defined in the following text.

The precipitation mass balance model partitions the precipitation falling on the watershed catchment area (i.e., that portion of the Facility area where the surface topography is sloped towards the river) into water that infiltrates the ground to become groundwater (GW), water which infiltrates but then moves back into the atmosphere via evaporation / transpiration and other processes, and water that flows off the surface as storm water (SW).

There are five parameters required by the precipitation mass balance method of computing radionuclide release rate to the Hudson River via the groundwater pathway.

1. Overall direction of groundwater flow - The surface topography shows that the IPEC facility is located in a significant depression in the eastern bank of the Hudson River. Given that groundwater elevations generally mirror ground surface topography and groundwater flow is from high elevations to lower elevations, the groundwater flows from the north, east and south towards the facility, with ultimate discharge to the Hudson River to the west.

2. Facility-specific groundwater flow paths - To establish facility-specific groundwater flow paths relative to on-site release areas, facility ground surface topography mapping was used. These flow paths were refined based on groundwater contours developed from the groundwater elevations measured with transducers installed in groundwater monitoring installations. The groundwater flow in each zone was then proportioned into shallow flow and deeper flow regimes based on relative hydraulic conductivities measured for the geologic deposits in each zone.

GROUNDWATER FLOW AND OFFSITE DOSE CALCULATION DETAILS

3. Rate of groundwater flow - The groundwater flow rates through the individual zones were computed using mass-balance relationships that begin with the overall average yearly precipitation for the watershed area and then subtract out precipitation volumes reflecting removal mechanisms such as:

   - Direct evaporation;
   - Vegetative transpiration;
   - Paved and roof surfaces - transport precipitation directly to the river via storm drains;
   - Footing drains.

   Prior to 2007, the net precipitation infiltration rates resulting in groundwater flow were adopted directly from a USGS study performed specifically for the Westchester County area, the location in which the facility is sited. The total groundwater flow rate was initially proportioned relative to the catchment areas associated with general groundwater flow areas.

   These groundwater flow values were subsequently refined in 2007 using the relative flow values computed with the Darcy's Law model. The gradients (changes in hydraulic pressure with distance) throughout the site were computed from the groundwater elevation contours. For this computation, each flow zone was segregated into two depth regimes; a higher hydraulic conductivity shallow regime and a lower conductivity deeper regime. Finally, the zone-specific flow rates before the Discharge Canal were compared to those after the canal to evaluate the groundwater flux to the river via the Discharge Canal as compared to that discharging directly to the river.

4. Groundwater radionuclide concentration - A number of multi-level groundwater monitoring installations are in place up-gradient of the Discharge Canal and along the waterfront, thus allowing the radionuclide concentrations to be measured for groundwater flowing into the canal as well as that near the groundwater/river interface.

5. Radionuclide release rate to river - Once the groundwater flow rates were established, the zone-specific radionuclide release rates to the Hudson River were computed by multiplying the area/depth-specific groundwater flow rates times the associated radionuclide activities; these individual zone-specific values were then summed to arrive at the total radionuclide release rate to the river.

Over the entire watershed catchment area of 3.2 million ft^2, the GW and SW has been segmented relative to areas of the facility through which it flows (primarily established based on the relative concentrations and types of contaminants in the various facility areas). The bulk of the GW activity is identified down gradient of the Unit 2 transformer yard. While tritium is suspected to have originated at both Unit 2 and Unit 1 leaks, most of the offsite dose has been demonstrated to originate from Unit 1 contamination from Sr-90 and other radionuclides (tritium has little dose effect). Stream tubes have been drawn through the boundaries of these areas to define six individual groundwater flow zones:

ZONES:

- **Northern Clean Zone**, the area north of Unit 2;
- **Unit 2 North Zone**, the northern areas of Unit 2, including some low levels of tritium;
- **Unit 1 / 2 Zone**, the area encompassing most of the known plume, between units 1 and 2;
- **Unit 3 North Zone**, the area between Unit 1 and Unit 3;
- **Unit 3 South Zone**, the area that primarily includes operating areas of Unit 3;
- **Southern Clean Zone**, south of Unit 3 to the edge of the property line.

GROUNDWATER FLOW AND OFFSITE DOSE CALCULATION DETAILS

Overall, the partitioning is established for groundwater and storm water, including recharge rates where storm drains and ground water communicate. In each zone, the groundwater flow is further subdivided into a shallow flow regime and a deeper flow regime based on the depth-specific differences in formation hydraulic conductivity. In addition, the groundwater flow values, determined from hydraulic pressure differences before and after the Discharge Canal, were computed and compared to estimate the amount of groundwater flowing into the canal as well as that discharging directly to the river.

Source Terms:

Concentrations of identified radionuclides for all Zones (from quarterly groundwater sampling data from Monitoring Wells and the accumulated Storm Drain sample data) are then applied for routine offsite dose cacluations per ODCM Part II, Section 2. All wells and storm drains are analyzed for gamma spectroscopy and tritium by liquid scintillation. Additionally, groundwater analyses are completed for beta emitters, such as Ni-63 and Sr-90. Quarterly results from effected wells in the effluent locations are evaluated to compute an average source term for each area or zone.

If a result is *below MDC* (whether positive or negative) it was *not* included in the computed average. This computed average is therefore biased high (more conservative from a dose computation perspective) relative to an average computed using all of the data, which would be more representative of actual conditions (values below MDC and non-detected "zero values" are equally valid results for the groundwater activity levels at certain locations/times). More specifically, the average is based on only those results above MDC for any location that had at least one identified value above MDC. However, if all the sampling locations assigned to a given stream tube provided results below the MDC, then an average concentration value of zero was assigned to the effected portion of the stream tube. (This mathematically allows the calculation to proceed in the absence of positive detections). This procedure results in a high, but conservative bias to the dose computations. 6/09

Ground Water and Storm Drain Source Term selection to the canal is as follows:

Streamtube	Manholes	Monitoring Wells, upper zone	Monitoring Wells, lower zone
Northern Clean Zone	NA	*Background*	*Background*
Unit 2 North	None	*MW-52-11* *MW-52-18* *MW-52-48*	*MW-52-64* *MW-52-122* *MW-52-162* *MW-52-181*
Units 1/ 2	MH-4A	*MW-36-24* *MW-36-41* *MW-36-52* *MW-50-42* *MW-50-66* *MW-54-37* *MW-57-11* *MW-57-20* *MW-57-45*	*MW-32-92* *MW-32-140* *MW-32-165* *MW-32-196* *MW-53-120* *MW-54-58* *MW-54-123* *MW-54-144* *MW-54-173* *MW-54-190*
Unit 3 North	CB-14, CB-34	*MW-58-26* *MW-58-65*	*MW-54-58* *MW-54-123* *MW-54-144* *MW-54-173* *MW-54-190*
Unit 3 South	B8	*U3-T2* *U3-T1*	*MW-44-102* *MW-41-63* *U3-4D*
Southern Clean Zone	C1, D1, E6, E10, E13	*MW-40-27* *MW-40-46* *MW-51-40* *MW-51-79*	*MW-40-81* *MW-40-100* *MW-40-127* *MW-40-162* *MW-51-104* *MW-51-135* *MW-51-163* *MW-51-189*

GROUNDWATER FLOW AND OFFSITE DOSE CALCULATION DETAILS

Ground Water and Storm Drain Source Term selection directly to the river is as follows:

Streamtube	Manholes	Monitoring Wells, upper zone	Monitoring Wells, lower zone
Northern Clean Zone	NA	*Background*	*Background*
Unit 2 North	MH-1 MH-12	*MW-60-35* *MW-37-32* *MW-49-42* *MW-37-22* *MW-49-26*	*MW-60-53* *MW-60-135* *MW-60-176* *MW-60-72* *MW-60-154*
Units 1and 2	MH-14	*MW-37-22* *MW-49-26* *MW-49-65* *MW-66-36* *MW-37-32* *MW-49-42* *MW-66-21* *MW-67-39*	*MW-67-105* *MW-67-219* *MW-67-323* *MW-67-173* *MW-67-276* *MW-67-340*
Unit 3 North	CB-15	*MW-62-18* *MW-62-53* *MW-63-18* *MW-63-50* *MW-62-37* *MW-62-71* *MW-63-34* *MW-63-93*	*MW-62-92* *MW-62-182* *MW-63-121* *MW-63-174* *MW-62-138* *MW-63-112* *MW-63-163*
Unit 3 South	none	*U3-T1* *U3-T2*	*MW-41-63* *U3-4D* *MW-44-102*
Southern Clean Zone	C2	*MW-40-27* *MW-51-40* *MW-40-46* *MW-51-79*	*MW-40-81* *MW-40-127* *MW-51-104* *MW-51-163* *MW-40-100* *MW-40-162* *MW-51-135* *MW-51-189*

Flow Rates:

Determination of flow rates to the canal and the river through each zone depend on infiltration rates as well as rainfall and measured hydraulic pressure differences. The infiltration rate in non-paved areas (or building areas) was computed at 0.87 feet/year, and consistent with the range provided in the USGS report: *Water Use, Groundwater Recharge and Availability, and Quality in the Greenwich Area, Fairfield County, CT and Westchester County, NY, 2000 - 2002.*

The precipitation rate for the IPEC area is recorded each year, and averages approximately 3 feet per year. A long-term onsite meteorological average should be used for a starting point in determining annual effluent flow rate. All precipitation falling on paved/building areas is assumed to result in SW flow. Although some of this water actually evaporates directly to atmosphere from pavement and buildings, no credit for this evaporation is taken to ensure conservativism in the model. Some of the Stormwater, however, naturally recharges the groundwater.

The following values are currently applied in the flow model:

Streamtube	Percent of Stormwater Flow Recharging Groundwater
Northern Clean Zone	0%
Unit 2 North	50%
Unit 1/2	30%
Unit 3 North	50%
Unit 3 South	1%
Southern Clean Zone	1%

GROUNDWATER FLOW AND OFFSITE DOSE CALCULATION DETAILS

Known extration rates from existing pathways need to be subtracted from the zones applicable to these specific pathways, as follows:

- Five gallons per minute (gpm) from the Unit 2 Footing Drain is removed from the Unit 2 North streamtube.
- Five gpm from the Unit 1 North Curtain Drain and 2.5 gpm from the Unit 1 Chemical Systems Building Foundation Drain are removed from the Unit 1/2 streamtube.
- Seven and a half gpm from the Unit 1 Chemical Systems Foundation Drain are removed from the Unit 3 North streamtube

Beyond the known flow and/or extraction rates, the model uses Darcy's Law to determine the flow contours for each of the six zones. Groundwater elevation contours and measurements of hydraulic conductivity are developed from the wells on site, recognizing that flow is perpendicular to the contours. This effort also provides knowledge of facility-specific flow paths. Measurments of pressure differential are then applied (per Darcy's Law) to determine flow rate:

$$Q = K * i * A$$

Where:

Q is groundwater flow (cubic feet/day). This value is calculated.

K is the hydraulic conductivity (ft/day). This value is a log normal average of hydraulic conductivity values measured within the appropriate portion of the streamtube. In other words, the ease of which flow can be forced through sub-surface media.

A is the cross sectional area through which groundwater is moving (ft^2).

i is the change in head over a distance (ft/ft), or a measure of the pressure driving the flow. This value is calculated for the shallow and deep zones both upgradient and downgradient of the canal.

The data above was applied to calibrate the precipitation mass balance model in 2007 and will be similarly applied in subsequent dose determination, with potential minor updates in pararmetes, such as the change in head (*i*) defined above, as the model is further refined. This calibration routine consists of the following steps, as they applied in the 2007 effluent determination:

1) Groundwater elevation data was downloaded from transducers and/or recorded manually with an electronic water level indicator or equivalent. Following download, the data was reduced and evaluated by the site Hydrologists.

2) A period of time was selected to evaluate the groundwater at key elevations and positions along all three axes, such that the maximum number of working transducers were included. Evaluations were also optimized by selecting readings during low-low tide on the targeted day.

GROUNDWATER FLOW AND OFFSITE DOSE CALCULATION DETAILS

3) Two sets of groundwater contours were prepared. Shallow groundwater contours were drawn based on groundwater elevation data collected generally at elevations higher than 40 feet below top of bedrock. Deep groundwater contours were drawn based on groundwater elevation data from sampling locations deeper than 40 feet below the top of rock, although preference was given to data from the upper portion of that zone.

4) Using the groundwater contours within each streamtube, the groundwater flux was calculated within each zone using Darcy's Law as described above.

5) The total flow, both upgradient and downgradient of the Discharge Canal, was summed separately. The difference between these flows constitutes that groundwater which is recharging the Discharge Canal.

6) The total flow downgradient of the Discharge Canal discharges into the Hudson river.

7) The percentage of groundwater flow in the upper and lower zones of each streamtube was calculated for proportioning of groundwater flow in the upper and lower zones in the Precipitation Mass Balance Model.

> NOTE:
>
> The groundwater contours used for the Darcy's Law calibration of the precipitation mass balance model have been based on data collected during Quarter 2 of calendar year 2007. Seasonal variations in precipitation and runoff were expected to cause variations in the groundwater contours for individual quarterly monitoring rounds. Quarterly data was collected and reviewed to evaluate if an update to the model would be required. To date, the small variation in groundwater flow has not warranted a model recalibration. However, once the complete set of quarterly groundwater contours have been collected, that quarter which provides the highest release rate (i.e. those with the steepest gradients observed from Quarter 2, 2007 to at least Quarter 2, 2009) will be used to generate a conservative recalibration of the Precipitation Mass Balance Model. 6/09

8) A final determination of offsite dose can be performed with the previously compiled data (dilution flow, effluent flow rates, and source terms) using an integrated dose calculation model (electronic Excel spreadsheet) identified in Reference 44. This spreadsheet, called the Master Groundwater Dose Calculator, is available from Chemistry Management.

   - The distribution of flow rates to the canal and the river, from each zone, is determined within this asset as a result of calibrations of the rainfall model with Darcy's Law and transducer data. Its purpose is to bound the effluent flow rate in a conservative fashion, until there is evidence of a need to recalibrate the precipitation mass balance method.
   - Averaged or conservative assessments of source term are entered for each zone from a list of required input locations (wells or drains in each effected area).
   - Dose calculations are performed with this information per ODCM Part II, Section 2.4, in the same fashion as other liquid effluents.

IPEC ODCM, Revision 2
Justification Package

IPEC COMBINED ODCM Rev 2 Justification Package

Prepared by: Steven Sandike

Brief Summary of Changes

June, 2009

The station ODCM was upgraded to revision 2, with changes summarized below:

ODCM Part I

1 *Modified Table D3.3.1-1, Section 3d, to update SFDS totalizer flow instrument with new plant ID number.*

2 *Added Lafarge well to REMP, Section 3.5, reclassifying MW 40 and 51 as RGWMP only.*

3 *Modified the format of Section D5.6 to more closely follow previous examples of outline format, and add two new sources of information: (ANI 07-01 and the EPRI GW Guidelines).*

ODCM Part II

4 *Added REMP sample point at Lafarge in Appendix G, and reclassified MW 40 and 51 as RGWMP only.*

5 *Modified Appendix J definition of the GW dose model with data from 2008.*

6 *Added detail to Appendices B and C, to indicate 80-10 and other pathways of interest.*

Each of the above changes is discussed in detail on the following pages. This information is to be included in the OSRC presentation, the 50.59 package, and the next Annual Effluent Release Report sent to the Commission per Reg Guide 1.21

IPEC COMBINED ODCM Rev 2 Justification Package

item # 1 of 6 June, 2009

OBJECTIVE:

Modify Table D3.3.1-1, Section 3d, to update SFDS totalizer flow instrument with new plant ID number.

DESCRIPTION OF CHANGES:

Modified Table D3.3.1-1, Section 3d, to reflect new instrument ID # (FR-7874) replacing the old instrument ID for the Sphere Foundation Drain Sump flow totalizer that was replaced in 2008 (CR-IP2-2008-03074 and ER-06-2-043).

IMPACT:

None.

JUSTIFICATION:

A new instrument was required to improve the reliability of this measurement. While the new instrument provides essentially the same functionality, the precise instrument that had been in use could not be purchased new. Hence, a new instrument ID was assigned per ER-06-2-043.

IPEC COMBINED ODCM Rev 2 Justification Package

item # 2 of 6 June, 2009

OBJECTIVE:

Add Lafarge well to REMP, Section 3.5 and reclassifying MW 40 and 51 as RGWMP only.

DESCRIPTION OF CHANGES:

Added Lafarge well to REMP, Table 3.5.1-1, Section 3d, in place of using MW-40 and MW-51. Updated Figure D4.1-1 to remove depiction of these Monitoring Wells, which remain in RGWMP, but are removed from REMP.

IMPACT:

None. The Monitoring Well at Lafarge was refurbished in 2008 in order to support this improvement.

JUSTIFICATION:

An off-site Monitoring well was deemed a better method to determine potential migration of contamination offsite (REMP) than the previous on-site wells near the training building. Monitoring Wells 40 and 51 remain an important part of the Radiological Groundwater Monitoring Program, but are no longer classified as fulfilling a REMP purpose. In 2008, Entergy funded an upgrade to the well at Lafarge such that it would function as a legitimate "Monitoring Well", and could be added to the REMP in 2009. This well and it's ability to implement the REMP are in keeping with REMP definitions in NUREG 1301.

IPEC COMBINED ODCM Rev 2 Justification Package

item # 3 of 6 June, 2009

OBJECTIVE:

Modify the format of Section D5.6 to more closely follow previous examples of outline format and add two new sources of information: (ANI 07-01 and the EPRI GW Guidelines).

DESCRIPTION OF CHANGES:

Modified the format of Section D5.6 to use letter designations for the sub-headers under Section D5.6. Added, under the section for objectives (a), references to two new documents: ANI 07-01 and the EPRI GW Guidelines.

IMPACT:

None

JUSTIFICATION:

Typographical improvements. The new documents were added to ensure inclusive bases.

IPEC COMBINED ODCM Rev 2 Justification Package

item # 4 of 6 June, 2009

OBJECTIVE:

Add a REMP sample point at Lafarge in Appendix G, and remove MW 40 and 51 from REMP.

DESCRIPTION OF CHANGES:

Added REMP sample point at the Lafarge Monitoring Well in Appendix G, page 4 of 7, as ID: ***GW/106***. Removed MW 40 and 51 from this list of REMP sample points. They are maintained in the Radiological Groundwater Monitoring Program (RGWMP). Modified page 7 of 7 to depict the new sample point.

IMPACT:

REMP sampling lower tier procedures were previously updated to include sampling at Lafarge.
No further changes to procedures are required to implement this upgrade to the program.

JUSTIFICATION:

An off-site Monitoring well was deemed a better method to determine potential migration of contamination offsite (REMP) than the previous on-site wells near the training building. Monitoring Wells 40 and 51 remain an important part of the Radiological Groundwater Monitoring Program, but are no longer classified as fulfilling a REMP purpose. In 2008, Entergy funded an upgrade to the well at Lafarge such that it would function as a legitimate "Monitoring Well", and could be added to the REMP in 2009. This well and it's ability to implement the REMP are in keeping with REMP definitions in NUREG 1301

IPEC COMBINED ODCM Rev 2 Justification Package

item # 5 of 6 June, 2009

OBJECTIVE:

Modify Appendix J, pages 2 and 6, describing the data applied to define the IPEC GW offsite dose model.

DESCRIPTION OF CHANGES:

Modified the description of the use of source term data near minimum detectable levels, and the note on page 6 of Appendix J, to clarify how 2008 data was applied to fine-tune the offsite dose model to it's current conservative calibration.

IMPACT:

None. Lower tier Chemistry procedure 0-CY-2740 was updated in 4th quarter 2008 to reflect the latest model calibration.

JUSTIFICATION:

The Groundwater contractors (GZA) provided feedback for groundwater contours on a quarterly basis through 2nd quarter 2009, and included the most conservative assessment of this data into the model to calibrate the Darcy's Law validation of the Precipitation Mass Balance model on site. The set of contours providing the highest release rate was used, as defined by the steepest gradients in ground water measurements observed from 2006 to mid-2009. Details of the calibration are included in the GZA final report for 2008 and provide a basis for any further calibration, should a more conservative contour be identified in any future annual report.

IPEC COMBINED ODCM Rev 2 Justification Package

item # 6 of 6 June, 2009

OBJECTIVE:

Add detail to Appendices B and C, to indicate 80-10 and other pathways of interest.

DESCRIPTION OF CHANGES:

Added detail to Appendix B, page 1 (units 1 and 2 liquid effluent pathways) and Appendix C, page 1 (units 1 and 2 airborne effluent pathways) to be more complete, including 80-10 and other pathways of interest.

IMPACT:

None

JUSTIFICATION:

These improvements are clerical and conform to similar efforts for the Unit 3 sketches (Attachments B and C, pages 2). Both unit release pathway sketches now indicate Groundwater and key 80-10 pathways, as well as all key routine effluent.