Enclosure 5
Page changes to the Integrated Safety Analysis Summary
showing changes made under Revision 15
(Revision bars, strikethroughs and underlines utilized)

INTEGRATED SAFETY ANALYSIS SUMMARY

Revision 15

LES, PO Box 1789, Eunice, New Mexico 88231, USA T: +1 575 394 4646 F: +1 575 394 4545 W: www.urenco.com

Copyright©2010 LES

Summary of Changes for Revision 14		
Issue / Date	**Change**	**Description of Change**
14a 02/01/10	LBDCR-09-0138 12-19-09	Mobile Feed Sampling Rig and addition of new chemical accident sequence, mitigated by application of IROFSC21. CC-EG-2009-0408; 70.72 = 2009-0781
	LBDCR-09-0138 1-8-10	Change CRDB girder bridge crane height from 9m to 9.75m
	LBDCR-10-0002 1-12-10	Editorial changes for Phased approach to operations CC-LS-2010-0001; 70.72 = 2010-0026
	LBDCR-09-0126 01-12-10	Clarify the difference between engineered IROFS and administrative IROFS CC-OP-2009-0007; 70.72 = 2010-0012
	LBDCR-10-0006 01-19-10	Four notes at the end of Table 3.8-1 inadvertently removed in revision 12a no cc package; 70.72 = no package
14b 02/08/10	LBDCR-10-0011 02-02-10	Correct various editorial errors No cc package; 70.72 = no package
	LBDCR-10-0007 02-02-10	SBM Temporary Ventilated Room CC-EG-2009-0369; 70.72= 2010-0078
14c 02-17-10	LBDCR-10-0012 02-03-10	ETC reports for criticality assessments due to Over-Enrichment CC-EG-2010-0021; 70.72 = 2010-0085
	LBDCR-10-0018 02-09-10	Replace current water system design with two smaller systems CC-EG-2010-0008; 70.72 = 2010-0112
	LBDCR-10-0015 02-10-10	Remove details regarding the specific number of personnel and fire & rescue equipment for Hobbs and Eunice CC-LS-2010-0004; 70.72 = 2010-0121
	LBDCR-09-0141 01-13-10	Removed accident sequences PT3-2 and UF3-1 CC-EG-2009-0491; 70.72 = 2010-0029

Summary of Changes for Revision 14		
Issue / Date	**Change**	**Description of Change**
14d 03-05-10	LBDCR-10-0023 02-16-10	GEVS is monitored from the control room, not controlled CC-LS-2010-0006; 70.72 = 2010-0145
	LBDCR-09-0110 02-18-10	Show the current pump/trap set and sampling configuration CC-EG-2009-0320; 70.72 = 2010-0139
	LBDCR-10-0028 02-19-10	Remove indications of pump trip on high weight (changes already implemented in LBDCR-09-0110) CC-EG-2009-0500; 70.72 = 2010-0163
	LBDCR-10-0030 02-22-10	Addition of ASME B31.3 Code Case and use of helium leak testing for process piping CC-LS-2010-0003; 70.72 = 2010-0181
	LBDCR-10-0004 11-14-10	Relocation of the CUB roof staircase (Figure 3.3-12) CC-EG-2009-0499; 70.72 = 2010-0008
	LBDCR-10-0009 02-25-10	SBM-1001 extension and CAB extension CC-LS-2010-0005; 70.72 = 2010-0190
	LBDCR-10-0005 01-11-10	Gantry crane description CC-OP-2009-0002; 70.72 = 2010-0101
	LBDCR-10-0026 03-02-10	Reflect final design for LTTS. CC-EG-2010-0015; 70.72 = 2010-0160
	LBDCR-10-0027 03-02-10	Reflect final design for Solid Feed, CC-EG-2010-0016; 70.72 = 2010-0161
	LBDCR-10-0036 03-02-10	Autoclave 471=4B1 will not be installed in the SBM 1001 due to space and budget considerations CC-EG-2009-0429; 70.72 = 2010-0188
14e 03-25-10	LBDCR-10-0039 03-09-10	Temporary storage of SBM condensate (in lieu of LECTS) CC-EG-2010-0005; 70.72 = 2010-0016

Summary of Changes for Revision 14		
Issue / Date	**Change**	**Description of Change**
	LBDCR-10-0042 03-10-10	Refine & clarify terminology used to describe radiological areas. Also update standards and process systems, removing no longer used and adding new. CC-RP-2010-0001; 70.72 = 2010-0222
14e (Continued)	LBDCR-10-0037 03-14-10	Distinguish between systems bounded at enrichment of 6 $^{w}/_{o}$ ^{235}U and 1.5 $^{w}/_{o}$ ^{235}U CC-LS-2010-0012; 70.72 = 2010-0189
	LBDCR-10-0044 03-11-10	Operate While Constructing LAR-09-14
	LBDCR-10-0033 03-18-10	Phased Operation is being revised to clearly identify the scope of the individual phases. CC-LS-2010-0010; 70.72 = 2010-0186
	LBDCR-10-0045 03-22-10	UBC Pad not available for duration of IPO and editoral corrections CC-LS-2009-0014; 70.72 = 2010-0237
	LBDCR-10-0043 03-23-10	Ensure compensatory measures are in place when an IROFS has been compromised. CC-LS-2010-0013; 70.72 = 2010-0228
	LBDCR-10-0046 03-20-10	Mobile pump and trap set used as local exhaust ventilation for connection of on-line mass spectrometer. CC-EG-2010-0112; 70.72 = 2010-0247
15 03-25-10	N/A	Submittal to NRC for non substantial changes previously approved by LES

Code Case	Code No	Code Requirement	Code Case Alternative	Source Document
ASME B31.3 Code Case 185	ASME B31.3	Process piping is required to be leak tested prior to initial operations. The baseline test method for internally pressurized piping systems is a hydrostatic leak test to be conduced at an internal pressure of 1.5 times the design pressure of the system.	The qualified helium leak test under vacuum conditions in ASME B&PV Code, Section V, Article 10, Appendix V and Appendix IX are acceptable substitutes for the testing requirements identified in para. 345 of ASME B31.3 provided the following conditions are met: 1. The piping system is expected to operator only under vacuum conditions. 2. Any leakage into the piping system that could result in an internal reaction that increases the pressure above atmospheric shall be prevented. 3. All system joints and connections shall be leak tested. Piping welds and joints to be tested shall be uninsulated and exposed, and shall not be primed, painted, or otherwise coated. 4. Helium leak testing is performed at vacuum conditions sufficient for mass spectrometer helium leak tests of ASME B&PV Code, Section V, Article 10, Appendices V and IX, or at pressures below 10 millibars absolute (<1% atmospheric pressure), whichever is lower. 5. ASME B31-3, para. 345.2 applies, except for the minimum "10 min" leak test period, the leak test pressure requirements and the limitation of the need for access for jacketed piping to "visual access." Para. 345.3 also applies except for the leak test pressure requirements. All other inspections, examination and records requirements of ASME B31.3 Chapter VI must still be satisfied. 6. Written procedures shall be qualified, in accordance with B&PV Code, Section V, Article 10. 7. Test personnel shall have training and certification consistent with ASME B31.3, para. 342. 8. Test reports, including records of personnel qualifications, shall meet the requirements of ASME B&PV Code, Section V, Article 10, Item T-1091 and shall be retained for at least 5 years. 9. Options of the ASME B&PV, Section V, Article 10 test methods, which allow the engineering design to	SAR ISAS

LBDCR-10-0030

Code Case	Code No	Code Requirement	Code Case Alternative	Source Document
			modify specified requirements of the Appendix V and Appendix IX test methods, may only be exercised so as to make these requirements more sensitive or more conservative. 10. The use of the vacuum leak test instead of the pressurized leak test of ASME B31.3, para.345, shall be specified in the engineering design and shall be accepted by the Owner.	

3.1 GENERAL INTEGRATED SAFETY ANALYSIS (ISA) INFORMATION

3.1.1 ISA Methods

This section outlines the approach utilized for performing the integrated safety analysis (ISA) of the process accident sequences. The approach used for performing the ISA is consistent with Example Procedure for Accident Sequence Evaluation, Appendix A to Chapter 3 of NUREG-1520. This approach employs a semi-quantitative risk index method for categorizing accident sequences in terms of their likelihood of occurrence and their consequences of concern. The risk index method framework identifies which accident sequences have consequences that could exceed the performance requirements of

10 CFR 70.61 (CFR, 2003c) and, therefore, require designation of items relied on for safety (IROFS) and supporting management measures. Descriptions of these general types of higher consequence accident sequences are reported in the ISA Summary.

The ISA is a systematic analysis to identify plant and external hazards and the potential for initiating accident sequences, the potential accident sequences, the likelihood and consequences, and the IROFS.

~~The ISA uses a hazard analysis method to identify the hazards which are relevant for each system or facility.~~The hazard and operability (HAZOP) analysis method was used initially to identify hazard for the Uranium Hexafluoride (UF_6) process systems and Technical Services Building (TSB) systems. This method is consistent with the guidance provided in NUREG-1513. The choice of a particular method or combination of methods is dependent upon a number of factors including:

LBDCR-10-0044

- Analysis problem characteristics
- Motivation for the study
- Perceived risk associated with the subject process or activity
- Resource availability and analyst/management preference
- Type of information available to perform the study
- Type of results needed

To satisfy NRC requirements as defined in Part 70, a method should be chosen that is capable of identifying specific accident/event sequences in addition to the safety controls that prevent such accidents or mitigate their consequences. The HAZOP method has this capability.

NUREG-1513 identifies several methods in addition to the HAZOP method (i.e., What-IF/Checklist and Failure Modes and Effects Analysis (FMEA)) that may be implemented. The guidance from NUREG 1513 will be followed for selection of a hazard analysis method.

The ISA Team reviewed the hazard identified for the "credible worst-case" consequences. All credible high or intermediate severity consequence accident scenarios were assigned accident sequence identifiers, accident sequence descriptions, and a risk index determination was made.

The risk index method is regarded as a screening method, not as a definitive method of proving the adequacy or inadequacy of the IROFS for any particular accident.

The ISA is intended to give assurance that the potential failures, hazards, accident sequences, scenarios, and IROFS have been investigated in an integrated fashion, so as to adequately consider common mode and common cause situations. Included in this integrated review is the identification of IROFS function that may be simultaneously beneficial and harmful with respect to different hazards, and interactions that might not have been considered in the previously completed sub-analyses. This review is intended to ensure that the designation of one IROFS does not negate the preventive or mitigation function of another IROFS. An integration checklist is used by the ISA Team as a guide to facilitate the integrated review process.

Some items that warrant special consideration during the integration process are:

- Common mode failures and common cause situations.
- Support system failures such as loss of electrical power or city water. Such failures can have a simultaneous effect on multiple systems.
- Divergent impacts of IROFS. Assurance must be provided that the negative impacts of an IROFS, if any, do not outweigh the positive impacts; i.e., to ensure that the application of an IROFS for one safety function does not degrade the defense-in-depth of an unrelated safety function.
- Other safety and mitigating factors that do not achieve the status of IROFS that could impact system performance.
- Identification of scenarios, events, or event sequences with multiple impacts, i.e. impacts on chemical safety, fire safety, criticality safety, and/or radiation safety. For example, a flood might cause both a loss of containment and moderation impacts.
- Potential interactions between processes, systems, areas, and buildings; any interdependence of systems, or potential transfer of energy or materials.
- Major hazards or events, which tend to be common cause situations leading to interactions between processes, systems, buildings, etc.

3.1.1.2 ~~Process~~ HAZOP Hazard Analysis Method

LBDCR-10-0044

As noted above, the HAZOP method was used to identify the process hazards. The HAZOP process hazard analysis (PHA) method is consistent with the guidance provided in NUREG-1513. Implementation of the HAZOP method was accomplished by either validating the Urenco HAZOPs for the NEF design or performing a new HAZOP for systems where there were no existing HAZOPs. In general, new HAZOPs were performed for the CRDB systems. In cases for which there was an existing HAZOP, the ISA Team, through the validation process, developed a new HAZOP.

For the UF_6 process systems, this portion of the ISA was a validation of the HAZOPs provided by Urenco. The validation process involved workshop meetings with the ISA Team. In the workshop meeting, the ISA Team challenged the results of the Urenco HAZOPs. As necessary the HAZOPs were revised/updated to be consistent with the requirements identified in 10 CFR 70 (CFR, 2003b) and as further described in NUREG-1513 and NUREG-1520.

To validate the Urenco HAZOPs, the ISA Team followed the HAZOP process as discussed in *Guidelines for Hazard Evaluation Procedures* (AICHE, 1992). Additional steps performed in this validation that are not identified in the above reference include~~performed the following tasks~~: LBDCR-10-0044

- ~~The Urenco process engineer described the salient points of the process system covered by the HAZOP being validated.~~
- ~~The ISA Team divided the process "Nodes" into reasonable functional blocks.~~
- ~~The process engineer described the salient points of the items covered by the "Node" being reviewed.~~
- ~~The ISA Team reviewed the "Guideword" used in the Urenco HAZOP to determine if the HAZOP is likely to identify all credible hazards. A representative list of the guidewords used by the ISA Team is provided in Table 3.1-1, HAZOP Guidewords, to ensure that a complete assessment was performed.~~
- ~~The ISA Team Leader introduced each Guideword being considered in the ISA HAZOP and the team reviewed and considered the potential hazards.~~ LBDCR-10-0044
- The ISA Team created a list of deviations for the UF_6 process, other processes in which the deviation could potentially impact the UF_6 process, and for external events (i.e., deviations from normal weather or external activities).
- For each potential hazard, the ISA Team considered the causes, including potential interactions among materials. Then, for each cause, the ISA Team considered the consequences and consequence severity category for the consequences of interest (Criticality Events, Chemical Releases, Radiation Exposure, Environment impacts). A statement of "No Safety Issue" was noted in the system HAZOP table for consequences of no interest such as maintenance problems or industrial personnel accidents.
- ~~For each hazard, the ISA Team considered existing safeguards designed to prevent the hazard from occurring.~~ LBDCR-10-0044
- ~~For each hazard~~In additional to identification of safeguards, the ISA Team also considered any existing design features that could mitigate/reduce the consequences.
- ~~The Urenco HAZOP was modified to reflect the ISA Team's input in the areas of hazards, causes, consequences, safeguards and mitigating features.~~ LBDCR-10-0044
- For each external event hazard, the ISA Team determined if the external hazard is credible (i.e., external event initiating frequency >10-6 per year).
- ~~When all of the Guidewords had been considered for a particular node, the ISA Team applied the same process and guidewords to the next node until the entire process system was completed.~~ LBDCR-10-0044
- The Urenco HAZOP was modified to reflect the ISA Team's input in the areas of hazards, causes, consequences, safeguards and mitigating features.

The same process as above was followed for the CRDB systems, except that instead of using the validation process, the ISA Team developed a completely new HAZOP. This HAZOP was then used as the hazard identification input into the remainder of the process.

The results of the ISA Team workshops are summarized in the ISA HAZOP Table, which forms the basis of the hazards portion of the Hazard and Risk Determination Analysis. The HAZOP tables are contained in the ISA documentation. The format for this table, which has spaces for describing the node under consideration and the date of the workshop, is provided in Table 3.1-2, ISA HAZOP Table Sample Format. This table is divided into 7 columns:

GUIDEWORD	Identifies the Guideword under consideration.
HAZARD	Identifies any issues that are raised.
CAUSES	Lists any and all causes of the hazard noted.
CONSEQUENCES	Identifies the potential and worst case consequence and consequences severity category if the hazard goes uncontrolled.
SAFEGUARDS	Identifies the engineered and/or administrative protection designed to prevent the hazard from occurring.
MITIGATION	Identifies any protection, engineered or otherwise, that can mitigate/reduce the consequences.
COMMENTS	Notes any comments and any actions requiring resolution.

This approach was used for all of the process system hazard identifications. The "Fire" and "External Events" guidewords were handled as a facility-wide assessment and were not explicitly covered in each system hazard evaluation.

The results of the HAZOP are used directly as input to the risk matrix development.

3.1.1.3 What-If/Checklist Hazard Analysis Method

The guidance from NUREG-1513 is followed for the What-IF/Checklist hazard analysis method selection. The What-IF/Checklist Analysis technique is a combination of two hazard evaluation methods: What-If Analysis and Checklist Analysis. The method is performed by a ISA Team with personnel experienced with the subject process. The ISA Team uses the What-If Analysis technique to brainstorm various types of precess accidents that can occur. Then the ISA Team uses one or more checklist to help fill in any gaps that may have been missed. Rather than focusing on a specific list of design or operating features, checklists used in a What-If/Checklist Analysis are more general and focus on sources of hazards and accidents.

A What-If/Checklist Analysis consists of the following steps: (1) preparing for the review, (2) developing a list of What-If questions and issues, (3) using a checklist to cover any gaps, (4) evaluating each questions and issue, and (5) documenting the results. LBDCR-10-0044

For each What-If question, the ISA Team determines the likelihood, consequences, safeguards, and acceptability of risk. The ISA Team meetings results are summarized in the What-If/Checklist, which forms the Hazard and Risk Determination Analysis basis.

3.1.1.4 Failure Modes and Effects Analysis (FMEA) Hazard Analysis Method

The guidance from NUREG-1513 recommends the FMEA hazard analysis method use. The FMEA is a systematic method for examining the effects of component failures on system performance. To perform the FMEA, an individual analyst lists all the components in the system under review, as well as all the failure modes for these components. The ISA Team made of analysts familiar with the system then identifies the hazards associated with each component failure and suggests corrective actions when appropriate.

The FMEA technique:

- Defines physical system bounds

- Determines the effect of each component failure mode
- Identifies safeguards to protect against the causes and/or consequences of each component failure mode
- Lists system components and postulates failure modes for each component and each physical bound
- Suggests actions for improving the system if the risk is deemed unacceptable

LBDCR-10-0044

~~3.1.1.3~~3.1.1.5 Risk Matrix Development

~~3.1.1.3.1~~3.1.1.5.1 Consequence Analysis Method

LBDCR-10-0044

10 CFR 70.61 (CFR, 2003c) specifies two categories for accident sequence consequences: "high consequences" and "intermediate consequences." Implicitly there is a third category for accidents that produce consequences less than "intermediate." These are referred to as "low consequence" accident sequences. The primary purpose of PHA is to identify all uncontrolled and unmitigated accident sequences. These accident sequences are then categorized into one of the three consequence categories (high, intermediate, low) based on their forecast radiological, chemical, and/or environmental impacts.

For evaluating the magnitude of the accident consequences, calculations were performed using the methodology described in the ISA documentation. Because the consequences of concern are the chemotoxic exposure to hydrogen fluoride (HF) and UO_2F_2, the dispersion methodology discussed in Section 6.3.2 was used. The dose consequences for all of the accident sequences were evaluated and compared to the criteria for "high" and "intermediate" consequences. The inventory of uranic material for each accident considered was dependent on the specific accident sequence. For criticality accidents, the consequences were conservatively assumed to be high for both the public and workers.

Table 3.1-3, Consequence Severity Categories Based on 10 CFR 70.61, presents the radiological and chemical consequence severity limits of 10 CFR 70.61 (CFR, 2003c) for each of the three accident consequence categories. Table 3.1-4, Chemical Dose Information, provides information on the chemical dose limits specific to the NEF.

~~3.1.1.3.2~~3.1.1.5.2 Likelihood Evaluation Method

LBDCR-10-0044

10 CFR 70.61 (CFR, 2003c) also specifies the permissible likelihood of occurrence of accident sequences of different consequences. "High consequence" accident sequences must be "highly unlikely" and "intermediate consequence" accident sequences must be "unlikely." Implicitly, accidents in the "low consequence" category can have a likelihood of occurrence less than "unlikely" or simply "not unlikely." Table 3.1-5, Likelihood Categories Based on 10 CFR 70.61, shows the likelihood of occurrence limits of 10 CFR 70.61 (CFR, 2003c) for each of the three likelihood categories.

The definitions of "not unlikely" and "unlikely" are taken from NUREG-1520. The definition of "highly unlikely" is taken from NUREG-1520. Additionally, a qualitative determination of "highly unlikely" can apply to passive design component features (e.g., tanks, piping, cylinders, etc.) of the facility that do not rely on human interface to perform the criticality safety function (i.e., termed "safe-by-design"). Safe-by-design components are those components that by their physical size or arrangement have been shown to have a $k_{eff} < 0.95$. The definition of safe-by-design components encompasses two different categories of components. The first category includes those components that are safe-by-volume, safe-by-diameter or safe-by-slab thickness. A set of generic conservative criticality calculations has determined the maximum volume, diameter, or slab thickness (i.e., safe value) that would result in a $k_{eff} < 0.95$. A component in this category has a volume, diameter or slab thickness that is less than the associated safe value resulting from the generic conservative criticality calculations and therefore the k_{eff} associated with this component is < 0.95. The components in the second category require a more detailed criticality analysis (i.e., a criticality analysis of the physical arrangement of the component's design configuration) to show that k_{eff} is < 0.95. In the second category of components, the design configuration is not bounded by the results of the generic conservative criticality calculations for maximum volume, diameter, or slab thickness that would result in a $k_{eff} < 0.95$. Examples of components in this second category are the product pumps that have volumes greater than the safe-by-volume value, but are shown by specific criticality analysis to have a $k_{eff} < 0.95$.

For failure of passive safe-by-design components to be considered "highly unlikely," these components must also meet the criterion that the only potential means to effect a change that might result in a failure to function, would be to implement a design change (i.e., geometry deformation as a result of a credible process deviation or event does not adversely impact the performance of the safety function). The evaluation of the potential to adversely impact the safety function of these passive design features includes consideration of potential mechanisms to cause bulging, corrosion, and breach of confinement/leakage and subsequent accumulation of material. The evaluation further includes consideration of adequate controls to ensure that the double contingency principle is met. For each of these passive design components, it must be concluded, that there is no credible means to effect a geometry change that might result in a failure of the safety function and that significant margin exists. For components that are safe-by-volume, safe-by-diameter, or safe-by-slab thickness (i.e., first category of safe-by-design components), significant margin is defined as a margin of at least 10%, during both normal and upset conditions, between the actual design parameter value of the component and the value of the corresponding critical design attribute. For components that require a more detailed criticality analysis (i.e., second category of safe-by-design components), significant margin is defined as $k_{eff} < 0.95$, where $k_{eff} = k_{calc} + 3\sigma_{calc}$. This margin is considered acceptable since the calculation of k_{eff} also conservatively assumes the components are full of uranic breakdown material at maximum credible enrichment for that system, the worst credible moderation conditions exist, and the worst credible reflection conditions exist. LBDCR-10-0012 LBDCR-10-0037

The demonstration of significant margin to meet "highly unlikely" is provided, for each of the components listed in Tables 3.7-6 through 3.7-21, in the following classified documents.

- ETC4009554, Criticality Assessment of Passive Safe-by-Design Components, Decontamination Workshop
- ETC4009555, Criticality Assessment of Passive Safe-by-Design Components, Mass Spectrometry Laboratory

a. An external event for which the frequency of occurrence can conservatively be estimated as less than once in a million years

b. A process deviation that consists of a sequence of many unlikely human actions or errors for which there is no reason or motive (In determining that there is no reason for such actions, a wide range of possible motives, short of intent to cause harm, must be considered. Necessarily, no such sequence of events can ever have actually happened in any fuel cycle facility.)

c. Process deviations for which there is a convincing argument, given physical laws that they are not possible, or are unquestionably extremely unlikely.

~~3.1.1.3.3~~3.1.1.5.3 Risk Matrix

| LBDCR-10-0044

The three categories of consequence and likelihood can be displayed as a 3 x 3 risk index matrix. By assigning a number to each category of consequence and likelihood, a qualitative risk index can be calculated for each combination of consequence and likelihood. The risk index equals the product of the integers assigned to the respective consequence and likelihood categories. The risk index matrix, along with computed risk index values, is illustrated in Table 3.1-6, Risk Matrix with Risk Index Values. The shaded blocks identify accidents of which the consequences and likelihoods yield an unacceptable risk index and for which IROFS must be applied.

The risk indices can initially be used to examine whether the consequences of an uncontrolled and unmitigated accident sequence (i.e., without any IROFS) could exceed the performance requirements of 10 CFR 70.61 (CFR, 2003c). If the performance requirements could be exceeded, IROFS are designated to prevent the accident or to mitigate its consequences to an acceptable level. A risk index value less than or equal to four means the accident sequence is acceptably protected and/or mitigated. If the risk index of an uncontrolled and unmitigated accident sequence exceeds four, the likelihood of the accident must be reduced through designation of IROFS. In this risk index method, the likelihood index for the uncontrolled and unmitigated accident sequence is adjusted by adding a score corresponding to the type and number of IROFS that have been designated.

| LBDCR-10-0044

~~3.1.1.4~~3.1.1.6 Risk Index Evaluation Summary

The results of the ISA are summarized in tabular form (see Section 3.7, General Types of Accident Sequences). This table includes the accident sequences identified for this facility. The accident sequences were not grouped as a single accident type but instead were listed individually in the table. The Table has columns for the initiating event and for IROFS. IROFS may be mitigative or preventive. Mitigative IROFS are measures that reduce the consequences of an accident. The phrase "uncontrolled and/or unmitigated consequences" describes the results when the system of existing preventive IROFS fails and existing mitigation also fails. Mitigated consequences result when the preventive IROFS fail, but mitigative measures succeed. Index numbers are assigned to initiating events, IROFS failure events, and mitigation failure events, based on the reliability characteristics of these items.

In summarizing the ISA results, Table 3.7-1, Accident Sequence and Risk Index, provides two risk indices for each accident sequence to permit evaluation of the risk significance of the IROFS involved. To measure whether an IROFS has high risk significance, the table provides an "uncontrolled risk index," determined by modeling the sequence with all IROFS as failed (i.e., not contributing to a lower likelihood). In addition, a "controlled risk index" is also calculated, taking credit for the low likelihood and duration of IROFS failures. When an accident sequence has an uncontrolled risk index exceeding four but a controlled risk index of less than four, the IROFS involved have a high risk significance because they are relied on to achieve acceptable safety performance. Thus, use of these indices permits evaluation of the possible benefit of improving IROFS and also whether a relaxation may be acceptable.

3.1.2 ISA Team

There were two ISA Teams that were employed in the initial ISA. The first team worked on the non-classified portions of the facility and is referred to in the text as the ISA Team. The second team, referred to as the Classified ISA Team, performed the ISA on the classified elements of the facility. Both teams were selected with credentials consistent with the requirements in 10 CFR 70.65 (CFR, 2003a) and the guidance provided in NUREG-1520. To facilitate consistency of results, common membership was dictated as demonstrated below (i.e., some members of the Non-Classified Team participated on the Classified Team. One of the members of the Classified Team participated in the ISA Team Leader Training, which was conducted prior to initiating the ISA. In addition, the Classified ISA Team Leader observed some of the non-classified ISA Team meetings. LBDCR-10-0044

The ISA was performed by a team with expertise in engineering, safety analysis and enrichment process operations. The team included personnel with experience and knowledge specific to each process or system being evaluated. The team was comprised of individuals who have experience, individually or collectively, in:

- Nuclear criticality safety
- Radiological safety
- Fire safety
- Chemical process safety
- Operations and maintenance
- ISA methods.

The ISA team leader was trained and knowledgeable in the ISA method(s) chosen for the hazard and accidents evaluations. Collectively, the team had an understanding of all process operations and hazards under evaluation.

The ISA Manager was responsible for the overall direction of the ISA. The process expertise was provided by the Urenco personnel on the team. In addition, the Team Leader has an adequate understanding of the process operations and hazards evaluated in the ISA, but is not the responsible cognizant engineer or enrichment process expert.

A description of the ISA Team, their areas of expertise, qualifications and experience is provided below.

3.1.7 Baseline Design Criteria

10 CFR 70.64 (CFR, 2003e) specifies baseline design criteria (BDC) that must be used for new facilities. The ISA accident sequences for the credible high and intermediate consequence events for the NEF have defined the design basis events. The IROFS for these events and safety parameter limits ensure that the associated BDC are satisfied. IROFS safety parameter limits are available in the ISA documentation. These BDC have been used as bases for the design of the NEF.

A. Quality Standards and Records.

Structures, systems, and components (SSCs) that are determined to have safety significance are designed, fabricated, erected, and tested in accordance with the quality assurance criteria set forth in Appendix B to 10 CFR Part 50 (CFR, 2003f). Appropriate records of the design, fabrication, erection, procurement and testing of SSCs which are determined to have safety significance are maintained throughout the life of the facility. A safety function is a function performed by a SSC that prevents a release of UF_6 to the environment that could result in a dose to a member of the public of at least the limits provided in Section 3.1.3, Selection of Quantitative Standards. ~~An SSC that performs a safety function is designated as an "item relied on for safety" (IROFS).~~An SSC that performs a safety function is designated as an engineered IROFS. An activity by personnel that performs a safety function is designated as an administrative IROFS. Management Measures applicable to IROFS are discussed in Section 3.1.8.3, Management Measures. LBDCR-09-0126

B. Natural Phenomena Hazards.

Structures, systems, and components that are determined to have safety significance (IROFS) are designed to withstand the effects of, and be compatible with, the environmental conditions associated with operation, maintenance, shutdown, testing, and accidents for which the IROFS are required to function.

Natural phenomena hazards are identified in Section 3.2, Site Description.

C. Fire Protection.

Structures, systems, and components that are determined to have safety significance (IROFS) are designed and located so that they can continue to perform their safety functions effectively under credible fire and explosion exposure conditions. Non-combustible and heat resistant materials are used wherever practical throughout the facility, particularly in locations vital to the control of hazardous materials and to the maintenance of safety control functions. Cables for unlimited use including open cable trays are flame retardant and tested (FT4 or IEEE 1202 type test) in accordance with the guidance of ANSI/IEEE 383, IEEE 1202, UL 1277, UL 1685, UL 83 (FT4), UL 1581 (FT4), CSA C22.2 (FT4), or ICEA T-30-520. Cable used inside panels, cabinets, and enclosed equipment are flame retardant and tested (FT1 oe VW-1 type test) in accordance with the guidance of UL 1581, UL 508A, UL 1063, or UL 83. Fire detection, alarm, and suppression systems are designed and provided with sufficient capacity and capability to minimize the adverse effects of fires and explosion on IROFS. The design includes provisions to protect against adverse effects that might result from either the operation or the failure of the fire suppression system.

Neutron Absorbers

Neutron Absorption is a factor in almost all of the materials at the NEF. The normal absorption of neutrons in standard materials used in the construction and processes at the NEF (uranium, fluorine, water, steel, etc.) is not specifically excluded as a criticality control parameter.

Models incorporate conservative values based on the process function of the neutron absorber. Depending on the function of the material, the bounding value may be validated at receipt, after installation, based on process knowledge during operation or by periodic surveillance. Neutron absorption by inherent structural or component materials, such as steel and aluminum, is not considered a fixed neutron absorber subject to ANSI/ANS-8.21 controls because removal potential is negligible and their continued presence is necessary to maintain plant operations. LBDCR-10-0012

Additional materials such as cadmium and boron for which the sole purpose would be to absorb neutrons are not incorporated in NEF processes. Solutions of absorbers are not used as a criticality control mechanism.

~~Neutron absorbers are not needed and are not used at the NEF.~~

J. Instrumentation and Controls.

Instrumentation and control systems shall be provided to monitor variables and operating systems that are significant to safety over anticipated ranges for normal operation, for abnormal operation, for accident conditions, and for safe shutdown. These systems shall ensure adequate safety of process and utility service operations in connection with their safety function. The variables and systems that require constant surveillance and control include process systems having safety significance, the overall confinement system, confinement barriers and their associated systems, and other systems that affect the overall safety of the plant. Controls shall be provided to maintain these variables and systems within the prescribed operating ranges under all normal conditions. Instrumentation and control systems shall be designed to fail into a safe state or to assume a state demonstrated to be acceptable on some other basis if conditions such as disconnection, loss of energy or motive power, or adverse environments are experienced.

For hardware IROFS involving instrumentation that provides automatic prevention or mitigation of events, status and operation will be monitored by the plant control system (PCS) by means of an alarm. This alarm will be provided by an isolated, hardwired digital signal from the associated IROFS to the PCS programmable logic controller (PLC). This signal will only be directed from the associated IROFS to the PCS PLC. The required isolation is provided at the IROFS hardware interface in the process equipment for the connections to the PCS PLC. Consistent with IEEE-279, "Criteria for Protection Systems for Nuclear Power Generating Stations", the isolation devices will be classified as part of the IROFS boundary and will be designed such that no credible failure at the output of the isolation device shall prevent the associated IROFS from meeting its specified safety function.

Planned preventative maintenance (PM) includes periodic refurbishment, partial or complete overhaul, or replacement of IROFS, as necessary, to ensure the continued availability and reliability of the safety function assumed in the ISA documentation. In determining the frequency of any PM, consideration is given to appropriately balancing the objective of preventing failures through maintenance, against the objective of minimizing unavailability of IROFS because of PM. In addition, feedback from PM and corrective maintenance and the results of incident investigations and identified root causes are used, as appropriate, to modify the frequency or scope of PM.

Planned maintenance on IROFS, or any items that may affect the function of IROFS, that do not have redundant functions available, will provide for compensatory measures to be put into place to ensure that the IROFS function is performed until it is put back into service.

Corrective maintenance involves repair or replacement of equipment that has unexpectedly degraded or failed. Corrective maintenance restores the equipment to acceptable performance through a planned, systematic, controlled, and documented approach for the repair and replacement activities.

For an IROFS that is found to be degraded or impaired by planned operations, maintenance, or construction activities: a compensatory measure may be used to ensure that the function of the IROFS is compensated until it is returned to service. For example, a continuous fire watch may be used to compensate for a degraded IROFS barrier. LBDCR-10-0043

Following any maintenance on IROFS, and before returning an IROFS to operational status, functional testing of the IROFS, as necessary, is performed to ensure the IROFS is capable of performing its intended safety function.

Training and Qualifications

IROFS, and any items that may affect the function of IROFS, require that personnel involved at each level (from design through and including any assumed process implementation steps or actions) have and maintain the appropriate training and qualifications. Employees are provided with formal training to establish the knowledge foundation and on-the-job training to develop work performance skills. For process implemented steps or actions, a needs/job analysis is performed and tasks are identified to ensure that appropriate training is provided to personnel working on tasks related to IROFS. Minimum training requirements are developed for those positions whose activities are relied on for safety. Initial identification of job-specific training requirements is based on experience. Entry-level criteria (e.g., education, technical background, and/or experience) for these positions are contained in position descriptions.

Qualification is indicated by successful completion of prescribed training, demonstration of the ability to perform assigned tasks, and where required by regulation, maintaining a current and valid license or certification.

Continuing training is provided, as required, to maintain proficiency in specific knowledge and skill related activities. For all IROFS, and any items that may affect the function of IROFS, involving process implemented steps or actions, annual refresher training or requalification is required as identified in the needs/job analysis referenced in the previous paragraph. (any exceptions credited within the ISA are discussed in Section 3.8.3).

3.1.10 Section 3.1 Tables

Table 3.1-1 HAZOP Guidewords

UF_6 PROCESS GUIDEWORDS			
Less Heat	Corrosion	Maintenance	No Flow
More Heat	Loss of Services	Criticality	Reverse Flow
Less Pressure	Toxicity	Effluents/Waste	Less Uranium
More Pressure	Contamination	Internal Missile	More Uranium
Impact/Drop	Loss of Containment	Less Flow	Light Gas
Fire (Process, internal, other)	Radiation	More Flow	External Event
NON UF_6 PROCESS GUIDEWORDS			
High Flow	Low Pressure	Impact/Drop	More Uranium
Low Flow	High Temperature	Corrosion	External Event
No Flow	Low Temperature	Loss of Services	Startup
Reverse Flow	Fire	Toxicity	Shutdown
High Level	High Contamination	Radiation	Internal Missile
Low Level	Rupture	Maintenance	
High Pressure	Loss of Containment	Criticality	
~~No Flow~~			
EXTERNAL EVENTS POTENTIAL CAUSES			
Construction on Site	Hurricane	Seismic	Transport Hazard Off-Site
Flooding	Industrial Hazard Off-site	Tornado	External Fire
Airplane	Snow/Ice	Local Intense Precipitation	

LBDCR-10-0011

3.2.2.3 Public Service Facilities

3.2.2.3.1 Fire Department and Local Law Enforcement

Fire support service for the Eunice area is provided by Eunice Fire and Rescue, located approximately 8 km (5 mi) from the site. ~~It is staffed by one full-time fire chief and 34 volunteer firefighters. Fire fighting equipment includes three pumpers, one tanker and three grass trucks.~~ LBDCR-10-0015 If additional fire equipment is needed, or if Eunice Fire and Rescue is unavailable, mutual aid agreements exist with all of the county fire departments.

The Eunice Police Department, with five full-time officers, provides local law enforcement. The Lea County Sheriff's Department also maintains a substation in Eunice. If additional resources are needed, officers from mutual aid communities within Lea County and Andrews County, Texas, can provide an additional level of response. The New Mexico State Police provide a third level of response.

3.2.2.3.2 School Population

There are four educational institutions within a radius of about 8 km (5 mi) of the NEF site, all in Lea County, New Mexico. These include an elementary school, a middle school, a high school and a private K-12 school. Table 3.2-2, Educational Facilities Near the Site, details the location of the educational facilities, population (including faculty/staff members), and student-teacher ratio. Apart from these schools, the next closest educational institutions are in Hobbs, New Mexico, 32 km (20 mi) north of the site.

The closest schools in Andrews County, Texas are in the community of Andrews about 51 km (32 mi) east of the NEF site.

3.2.2.3.3 Health Care Populations

There are two hospitals in Lea County, New Mexico. The Lea Regional Medical Center is located in Hobbs, New Mexico, about 32 km (20 mi) north of the proposed NEF site. This 250-bed hospital can handle acute and stable chronic care patients. In Lovington, New Mexico, 64 km (39 mi) north-northwest of the site, Covenant Medical Systems manages Nor-Lea Hospital, a full-service, 27-bed facility.

There are no nursing homes or retirement facilities in the site area. The closest such facilities are in Hobbs, New Mexico, about 32 km (20 mi) north of the site.

3.2.2.3.4 Recreational Population

There are no recreational facilities near the site. The Eunice Golf Course is located approximately 15 km (9.2 mi) from the site. A historical marker and picnic area is located about 3.2 km (2 mi) from the site at the intersection of New Mexico Highways 234 and 18.

Roofs will be designed so as not to pond water to a depth during the local intense PMP that could exceed the design load for the roof.

Local site runoff ~~will be~~has been determined for the local plant site drainage area. Maximum ponding depths around the main plant structures ~~will be determined~~is approximately 49 cm (1.9 ft) using final site topography. Although ~~T~~the potential for water intrusion into critical plant areas will be precluded by final site grading, criticality analysis conservatively assumes 60 cm (2 ft) of flooding. LBDCR-10-0012

3.2.3.4.5 Lightning

Thunderstorms occur during every month but are most common in the spring and summer months. Thunderstorms occur an average of 36.4 days/year in Midland-Odessa, Texas, based on a 54 year period of record. The seasonal averages are: 11 days in spring (March through May); 17.4 days in summer (June through August); 6.7 days in fall (September through November); and 1.3 days in winter (December through February).

J. L. Marshall (Marshall, 1973) presented a methodology for estimating lightning strike frequencies which includes consideration of the attractive area of structures. His method consists of determining the number of lightning flashes to earth per year per square kilometer and then defining an area over which the structure can be expected to attract a lightning strike. Assuming that there are 4 flashes to earth per year per square kilometer (10.36 flashes to earth per year per square mile) in the vicinity of the NEF (conservatively estimated using Figure 3.2-4, Average Lightning Flash Density, which is taken from the NWS (NWS, 2003). Marshall defines the total attractive area, A, of a structure with length L, width W, and height H, for lightning flashes with a current magnitude of 50% of all lightning flashes as:

$$A = LW + 4H (L + W) + 12.57 H2$$

The following building complex dimensions were used to estimate conservatively the attractive area of the NEF:

$$L = 534 \text{ m } (1{,}752 \text{ ft}),\ W = 534 \text{ m } (1{,}752 \text{ ft}),\ H = 20^1/_4 \text{ m } (66^1/_2 \text{ ft})$$

The total attractive area is therefore equal to 0.34 km^2 (0.1455 mi^2). Consequently, the lightning strike frequency computed using Marshall's methodology is given as 1.51 flashes per year.

Lightning protection for the NEF is provided.

3.2.4 Hydrology

This section describes the NEF site's surface water and groundwater resources. Data is provided for the NEF site and the surrounding area, and the regional associations of those natural water systems are described. This information provides the basis for evaluation of any potential facility impacts on surface water, aquifers, and the related social and economic structures of the area around the facility.

3.2.6.6 SBM Building Design

The SBM1001 is a safety-significant building which was designed and constructed in accordance with ASCE 43-05 and is the sole protection of important internal equipment and systems from extreme external phenomena including the ~~DBA~~DBE, tornado and high wind, roof snow load, and roof ponding and site flooding~~, and~~ due to local intense precipitation. Future separations facilities will ~~eliminate~~ maintain these safety functions ~~and~~by requiring ~~require only~~ that the exterior steel and concrete buildings do not collapse during the current DBE, the licensing basis tornado and high wind loads, or the license basis local intense precipitation, flooding and snow loading, as described in 3.2.6.5, above. LBDCR-10-0012

To assure adequate structural design margin against collapse under these conditions, future separation facilities will be designed in accordance with the AISC ASD Manual of Steel Construction and ACI 318, Building Code Requirements for Structural Concrete, with the additional requirement that primary stresses during the extreme external loads will be limited to yield strength levels in order to assure elastic response of the buildings. In addition, the building design analysis will be performed in accordance with accepted industry standards, including ASCE 4, Seismic Analysis of Safety-Related Nuclear Structure, and ASCE 7, Minimum Design Loads for Building and Other Structures. The design analyses will be performed under a QA Level 1 (QL-1) program. Construction of these facilities will be in accordance with the graded QL-1G program described in the QAPD. These design and quality requirements will provide substantial margin against collapse.

The DBE for the future separations facilities will remain the current ASCE 43-05 ground motion seismic response spectra based on a seismic safety goal of 1E-5 annual probability, as described in 3.2.6.5, above.

3.2.7 Stability of Subsurface Materials

Detailed information about soil composition across the NEF site, including N-values, can be found in Appendices A and C of the Geotechnical Report (NTS Report 114489-G-01, Rev. 00). Allowable bearing pressures can be found in Table 5.8-2 and Figures 5.8-1 and 5.8-2 of the Geotechnical Report, and these values are based on the assumptions in Section 5.8 of the report. The California Bearing Ratio (CBR) test results can be found in Section 5.6.1 of the report. Table 5.9-4 of the report gives the maximum dry density values. A discussion of the soil's Young's modulus and a plot of the soil's Young's modulus can be found in Section 5.9.3 and Figure 5.9-4 of the report, respectively. Information on Atterberg limits can be found in Table 2-2 and Figure 3-5 of the report. A graph of the percentage of soil particles passing No. 200 sieve size vs. elevation is given in Figure 2-3 of the report.

The surface deposits silty sands will be removed to expose the more firm soil structures. Due consideration will be given to settlement and differential settlement during final design.

To support the final design of the NEF, as documented in the Geotechnical Report, additional soil borings were collected from the NEF site. Laboratory testing was performed on soil samples and additional in-situ testing was performed to determine static and dynamic soil properties. Using the soil information obtained, the following activities were conducted.

- The assessment of soil liquefaction potential was performed using the applicable guidance of Regulatory Guide 1.198, Procedures and Criteria for Assessing Seismic Soil Liquefaction at Nuclear Power Plant Sites.

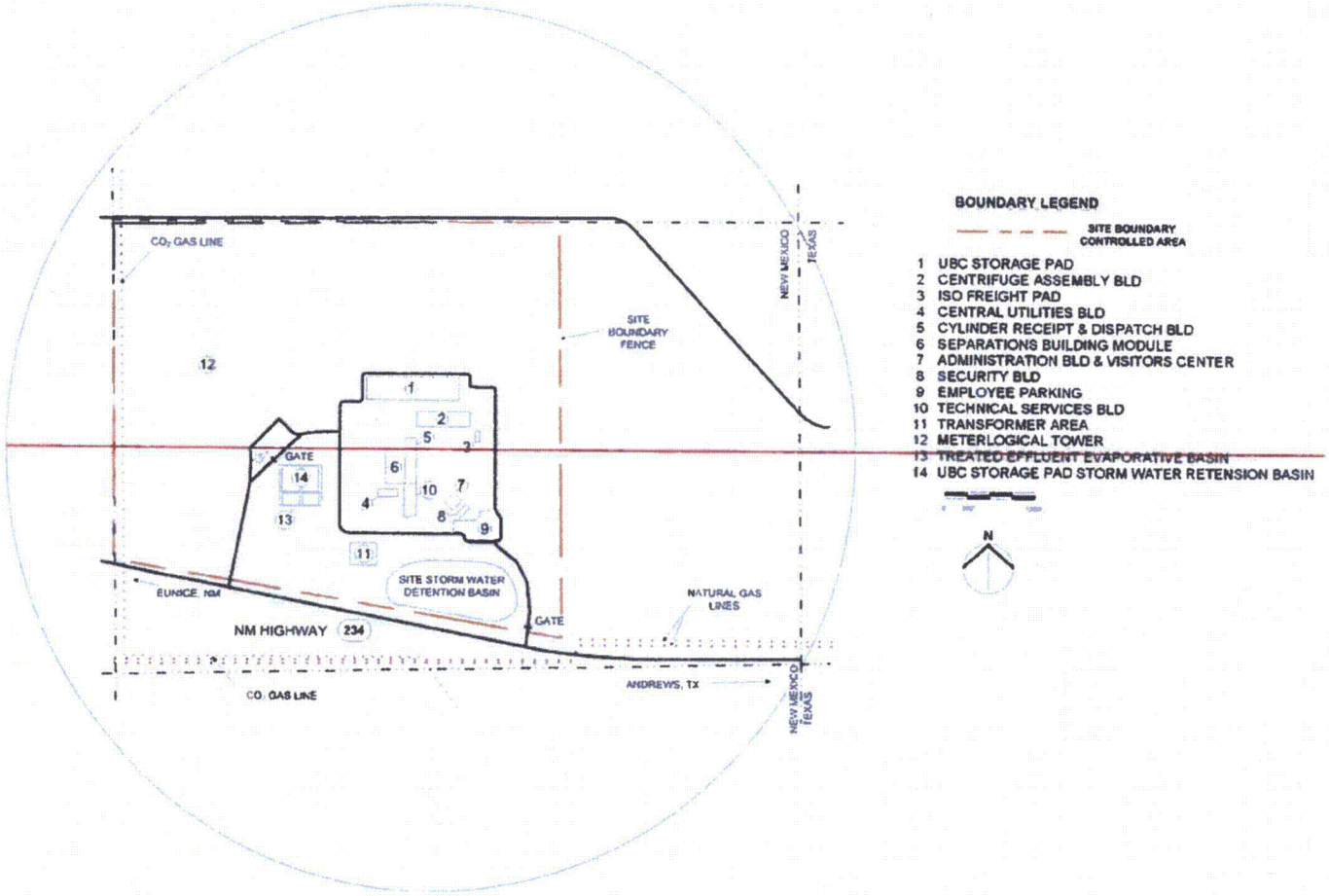

LBDCR-10-0009

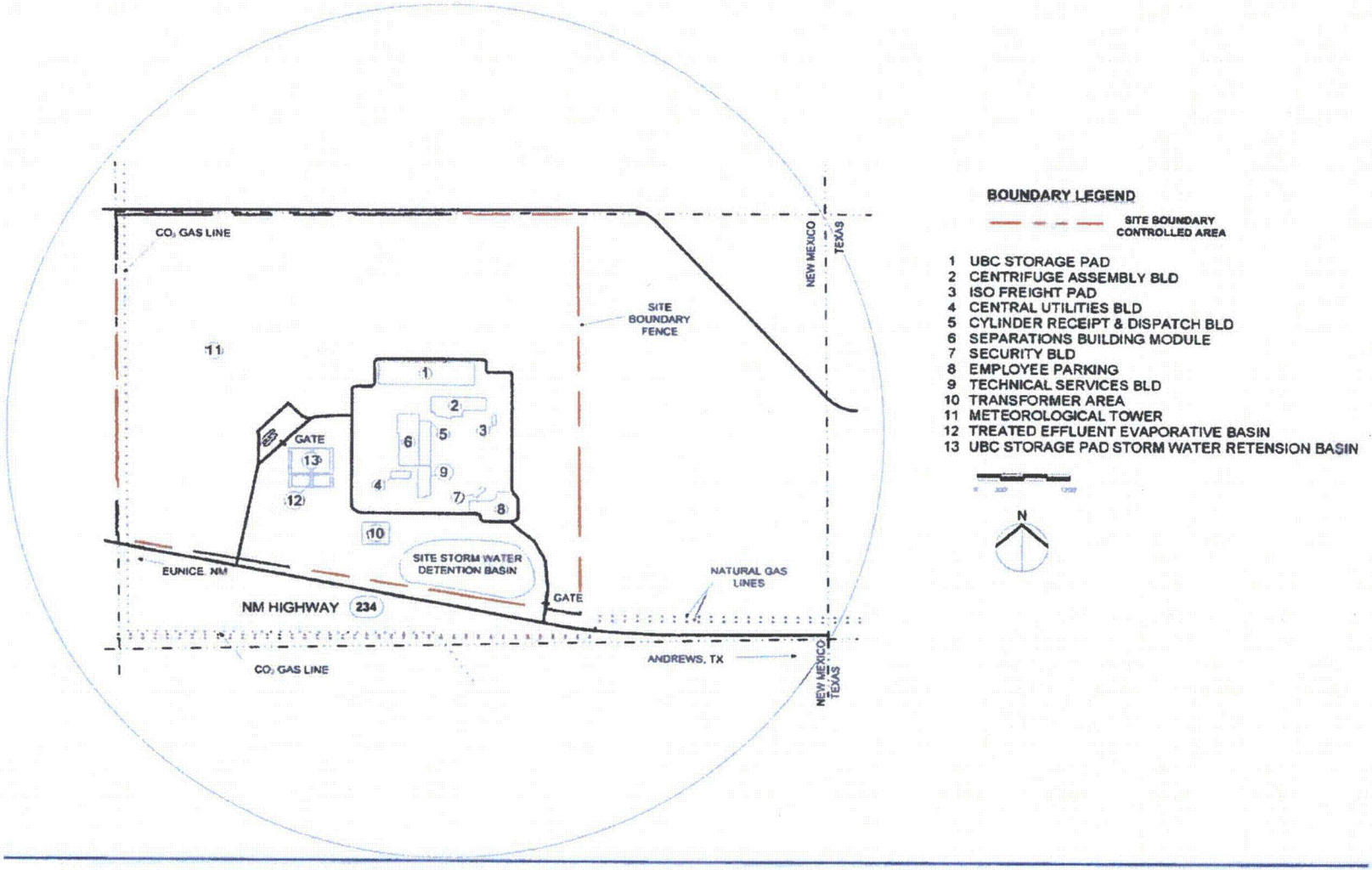

LBDCR-10-0009

Figure 3.2-2 Plot Plan (1 Mile Radius)

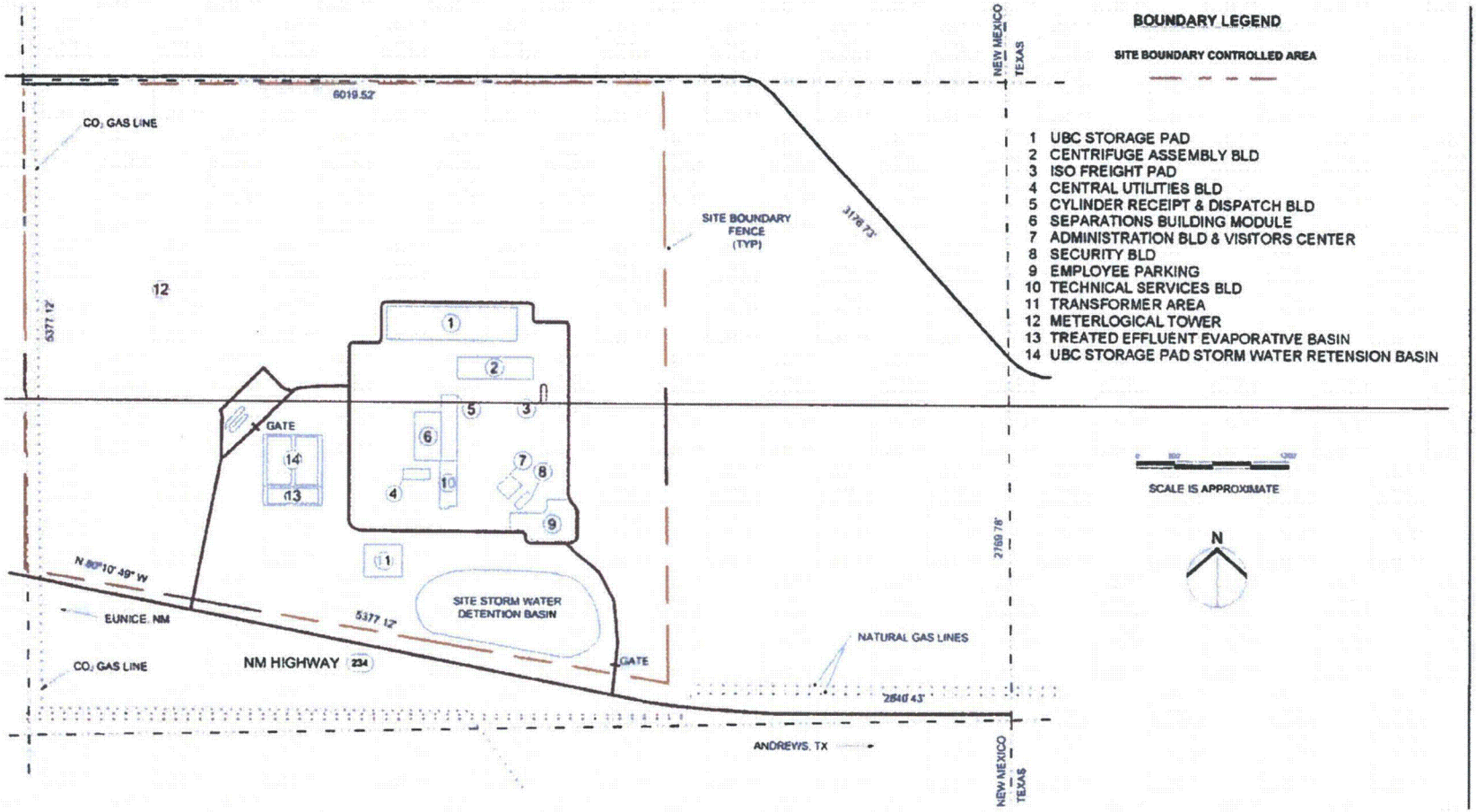

LBDCR-10-0009

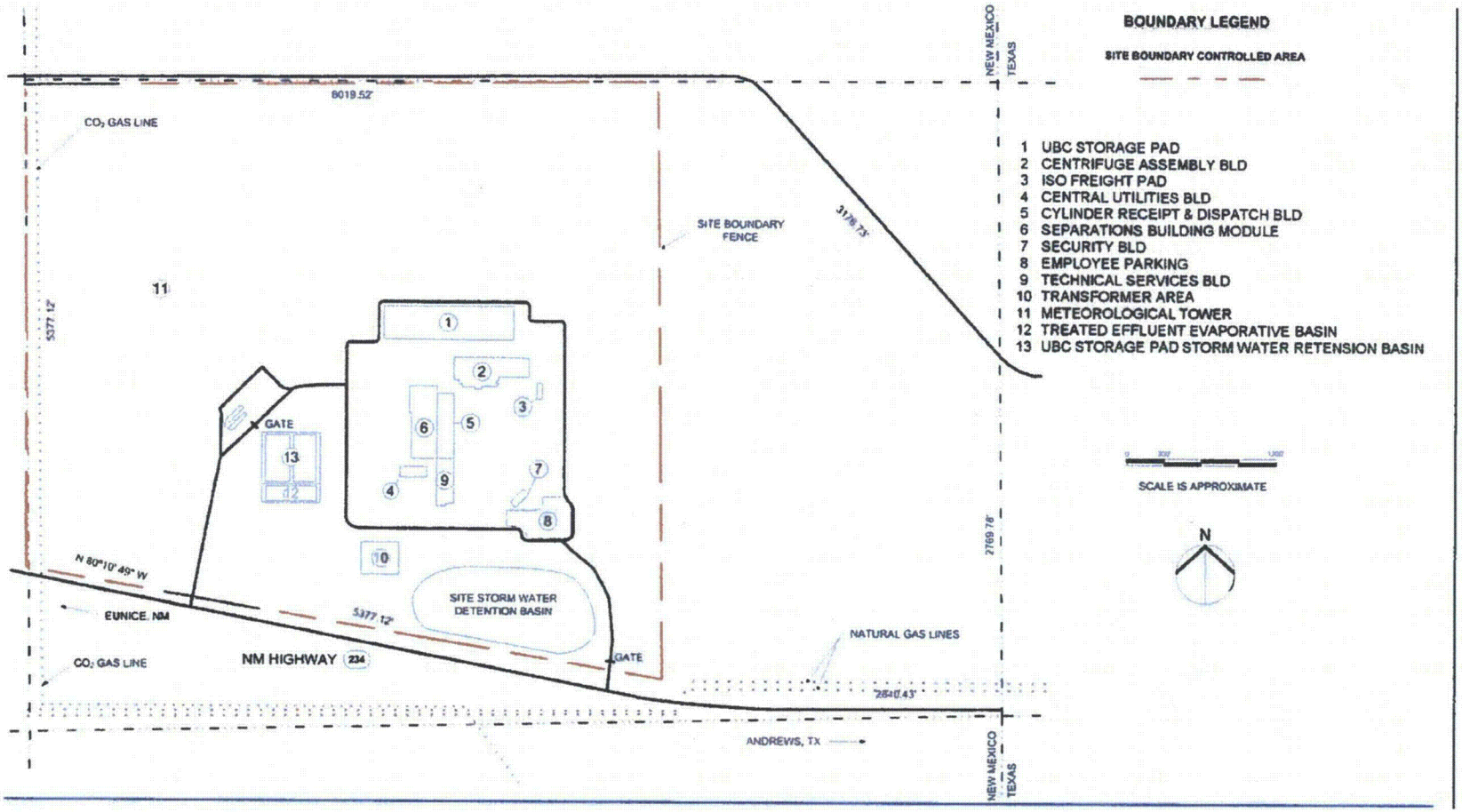

LBDCR-10-0009

Figure 3.2-3 Site Plan

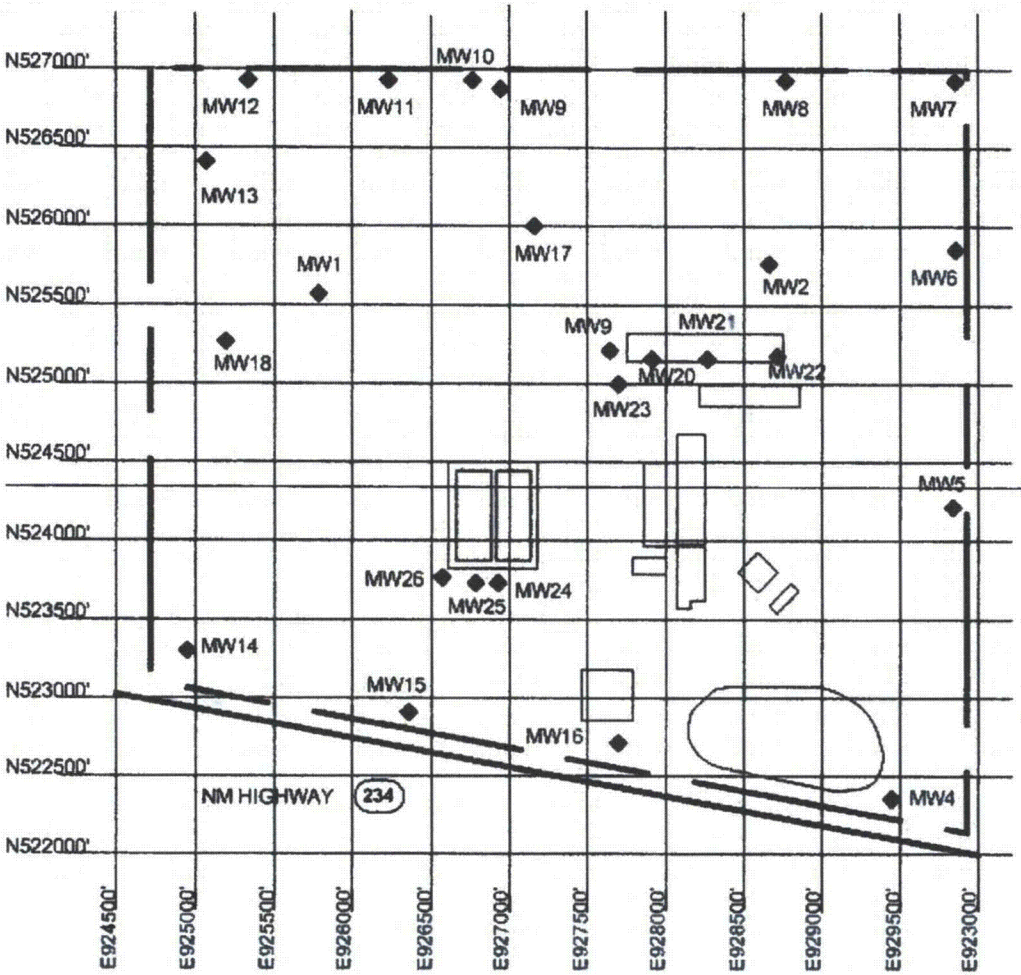

MONITORING WELLS		
WELL NO.	NORTHING	EASTING
MW-1	525569.74	925710.07
MW-2	525770.2	928625.73
MW-4	522326.995	929433.808
MW-5	524206.02	929825.78
MW-6	525881.706	929797.959
MW-7	527012.291	929741.526
MW-8	526979.997	928748.078
MW-9	526949.714	926975.341
MW-10	526974.82	926780.668
MW-11	526961.562	926251.803
MW-12	526950.295	925310.473
MW-13	526405.856	925022.698
MW-14	523292.982	924976.898
MW-15	522868.566	926358.939
MW-16	522675.427	927652.874
MW-17	526000.259	927162.85
MW-18	525246.462	925165.989
MW-19	525201.25	927581.17
MW-20	525147.25	927853.25
MW-21	525156.5	928228.42
MW-22	525154.92	928676.5
MW-23	524994.75	927653.83
MW-24	523744.58	926907.75
MW-25	523739.67	926739.67
MW-26	523747.17	926528.42

LBDCR-10-0009

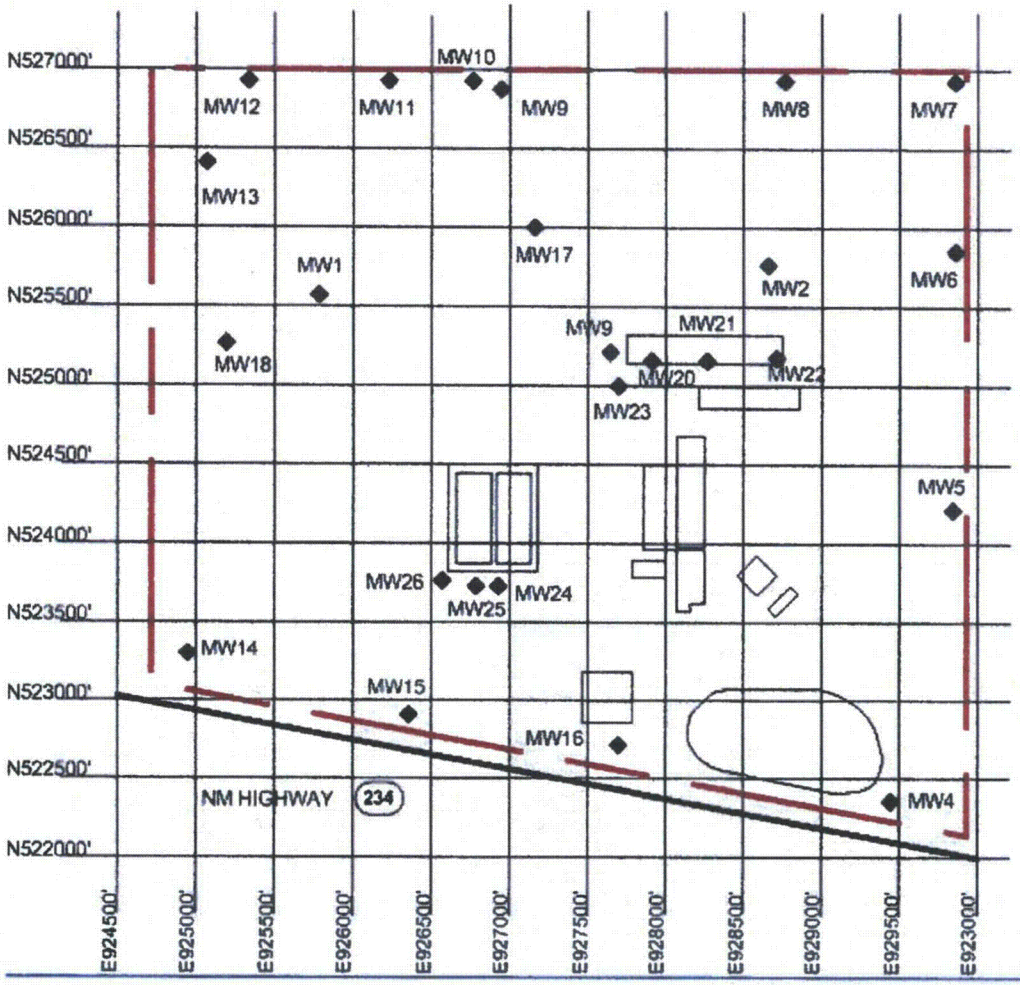

MONITORING WELLS		
WELL NO.	NORTHING	EASTING
MW-1	525569.74	925710.07
MW-2	525770.2	928625.73
MW-4	522326.995	929433.808
MW-5	524206.02	929825.78
MW-6	525881.706	929797.959
MW-7	527012.291	929741.526
MW-8	526979.997	928748.078
MW-9	526949.714	926975.341
MW-10	526974.82	926780.668
MW-11	526981.562	926251.803
MW-12	526950.295	925310.473
MW-13	526405.858	925022.698
MW-14	523292.982	924976.896
MW-15	522868.566	926358.939
MW-16	522675.427	927652.874
MW-17	526000.259	927162.85
MW-18	525246.462	925185.989
MW-19	525201.25	927581.17
MW-20	525147.25	927853.25
MW-21	525156.5	928228.42
MW-22	525154.92	928676.5
MW-23	524994.75	927653.83
MW-24	523744.58	926907.75
MW-25	523739.67	926739.67
MW-26	523747.17	926528.42

LBDCR-10-0009

Figure 3.2-5A Monitoring Wells

3.3 FACILITY DESCRIPTION

The arrangement of the National Enrichment Facility (NEF) is shown in Figure 3.3-1, Facility Buildings and Areas. The major structures and functional areas of the facility are discussed in the following sections.

Distances from the facility to the site boundary were determined using guidance from U.S. NRC Regulatory Guide 1.145 (NRC, 1982), i.e., the nearest point on the building complex to the site boundary within a 45-degree sector centered on the compass direction of interest. These distances are provided in Table 3.3-1, Distances to Site Boundary and to Restricted Area Boundary and Wind Frequencies.

The distance to the nearest resident is greater than 4.26 km (2.63 mi).

3.3.1 Buildings and Major Components

3.3.1.1 Separations Building Modules

3.3.1.1.1 Design Description

~~(See 4.1.1)~~ The overall layout of a Separations Building Module (SBM) is presented in Figures 3.3-2 through 3.3-5. The Separations Building Modules (SBMs) have two Cascade Halls, a UF_6 Handling Area, and a Process Services Corridor. LBDCR-10-0033

3.3.1.1.2 Functional Areas and Major Components

3.3.1.1.2.1 Cascade Halls

~~(See 4.1.1 A.)~~ The Cascade Halls contains multiple cascades, each of which is made up of many centrifuges. Structural support walls split the Cascade Hall into Mini-Halls. The centrifuges are mounted on precast concrete floor mounting elements (flomels). Each Mini-Hall is enclosed by a structural steel frame, which supports insulated thermal sandwich panels. These panels surround each Mini-Hall to aid in maintaining a constant temperature within the enclosure. A temporary Mobile Thermal Wall System separated operating cascades from construction and installation of subsequent cascades in the same Mini-Hall. LBDCR-10-0033 LBDCR-10-0044

3.3.1.1.2.2 Process Services Corridor

~~(See 4.1.1 B.)~~ The Process Services Corridor contains gas transport equipment, which connects the cascades to the UF_6 Feed System, Product Take-off System, Tails Take-off System and Contingency Dump System. LBDCR-10-0033

All three floors of the Process Services Corridor contains various pieces of equipment, control cabinets and electrical cabinets. In addition the second floor contains valve support frames, process pumps and chemical traps and the third floorcontains water pumps and heating and ventilation equipment. The various floors of the Process Services Corridor can be accessed by one of three stairways or by the freight elevator.

LBDCR-10-0033

LBDCR-10-0002

3.3.1.1.2.3 ~~(See 4.1.1 C.)~~ UF_6 Handling Area

~~(See 4.1.1 C.)~~ The UF_6 Handling Area contains the UF_6 Feed System, the Product Take-off System, Tails Take-off System, and the Blending and Liquid Sampling System.

From the Feed System, natural uranium in the form of UF6 is fed into the cascades. The Product Take-off System collects UF_6 enriched in the ^{235}U isotope while the Tails Take-off System normally collects UF_6 depleted in the ^{235}U isotope. Under abnormal process conditions the Tails Take-off will accept the contents of dumped cascades. LBDCR-10-0037

(See SAR § 12.1.1.1.6 and 12.1.1.1.7) The primary function of the Blending and Liquid Sampling Area is to provide means to fill 30B product cylinders with UF_6 at a required ^{235}U concentration and to obtain homogenized liquid UF_6 samples. The area contains the major components associated with the Products Blending System and the Product Liquid Sampling System. The Product Blending System is described in Section 3.4.6, Product Blending System. The Product Liquid Sampling System is described in Section 3.4.7, Product Liquid Sampling System. The UF_6 cylinders used in the autoclaves are protected from tornado missiles either by hardened structure around the autoclaves or by the design of the autoclave itself. LBDCR-10-0033

(See SAR § 12.1.1.1.8) Rail transporters travel on rails embedded along the entire length of the UF_6 Handling Area floor. The rail transporter transfers the 30B and 48Y cylinders to and from the appropriate feed or receiver stations, or product blending autoclaves. It has the ability to handle the 48-inch feed and tails cylinders (UBCs) and 30-inch product cylinders. LBDCR-10-0033 LBDCR-10-0033

3.3.1.1.2.4 Building Construction

Each SBM superstructure is structurally independent from adjacent superstructure(s). LBDCR-10-0002

Interior non-load bearing walls are constructed of concrete block with a painted finish. These walls extend to the underside of the structure where required.

The floors of the Cascade Halls have a floor profile quality classification of flat in accordance with American Concrete Institute (ACI) 117 to aid in the transport of assembled centrifuges.

Cascade Hall and UF_6 Handling Area floors are exposed concrete with a washable epoxy coating finish designed to resist process chemicals, decontamination agents and radiation.

3.3.1.2 Technical Services Building

~~(See 4.1.2)~~ The overall layout of the Technical Services Building (TSB) is presented in Figures 3.3-6and 3.3-7. The TSB is located adjacent to the CRDB. The TSB contains support areas for the facility. It also acts as a point of entry to the CRDB. LBDCR-10-0033

3.3.1.2.1 Design Description

The TSB is a two-story structure and totals approximately 5730 m^2 (61,700 ft^2) per floor. The classification of the TSB includes a mixture of uses including B, S, F and H occupancy. The majority of the Building is classified as Group B. The TSB is classified as a Type II-B Construction by the NMCBC and as a Type II (000) Construction by NFPA 220.

Several of the TSB areas are separated from adjacent areas by one-hour or greater fire-rated construction. These areas include:

- Chemical Storage and Waste Processing
- I&C Electrical Shop
- Mechanical Shop
- Warehouse

3.3.1.2.2 Functional Areas and Major Components

3.3.1.2.2.1 Control Room

The Control Room is the main monitoring and reporting point for the entire facility. The Control Room provides facilities to both directly and indirectly monitor and operate plant control systems. It is classified as a B Occupancy. It is a permanently manned area and contains the following equipment:

- Overview screen
- Control desk
- Fire alarm system
- Plant Control Systems
- Communication systems.

The Plant Control Systems and the Communications and Alarms System are described in Section 3.5.9, Control Systems and Section 3.5.7, Communication and Alarm Annunciation Systems, respectively.

3.3.1.2.2.2 Training ~~and Simulator~~ Rooms LBDCR-10-0002

~~(See 4.1.2 B.)~~ Several training rooms are available for Operational training. The rooms are classified as B Occupancy areas. The rooms are in the hardened area and contain the following: LBDCR-10-0033

- Plant Control System training system
- Centrifuge Monitoring System training system
- Central Control System switches and servers

3.3.1.2.2.3 Central Alarm Station (CAS) Area

~~(See 4.1.2 C.)~~ The Central Alarm Station Area is used as the primary security monitoring station for the facility. The area includes the Central Alarm Station (CAS), offices, conference area and secure file storage area. It is classified as a B Occupancy area. All electronic security systems are controlled and monitored from this center. These systems include Closed Circuit Television (CCTV), Intrusion Detection and Assessment (IDA), Access Control and Radio Dispatch. The Secondary Alarm Station (SAS) is located in the Security Building and serves as a duplicate control console to the CAS. LBDCR-10-0033

3.3.1.2.2.4 Medical Room

(See SAR § 12.1.1.2.1~~4.1.2 D.~~) The Medical Room is designed to provide space for a nurse's station. This room is classified as a B Occupancy area. LBDCR-10-0033

3.3.1.2.2.5 Emergency Operations Center (EOC) Area

~~(See 3.94.1.2 E.)~~ The Emergency Operations Center Room serves as an assembly area for emergency planning purposes. The EOC is classified as a B Occupancy area and has a general assembly room, offices and a meeting room. LBDCR-10-0002 LBDCR-10-0033

3.3.1.2.2.6 Technical Support Center Assembly Room

~~(See 3.94.1.2 F.)~~ The Technical Support Center Assembly Room serves as an assembly area for emergency planning purposes and has an area allocated for the storage of emergency equipment and supplies. It is classified as a B Occupancy area. LBDCR-10-0002 LBDCR-10-0033

3.3.1.2.2.7 Break Room

(See SAR § 12.1.1.2.2~~4.1.2 G.~~) The Break Room has space for vending machines, tables and a small kitchenette. It is classified as a B Occupancy area. LBDCR-10-0033

3.3.1.2.2.8 I&C Electrical Shop Room

(See SAR § 12.1.1.2.3~~4.1.2 H.~~) The I&C Electrical Shop Room serves as a work area for general electrical and I&C components and maintenance. This room is classified as a F-2 Occupancy area. LBDCR-10-0033

3.3.1.2.2.9 Mechanical Shop Room

(See SAR § 12.11.2.4~~4.1.2 I.~~) The Mechanical Shop Room serves as a work area for general mechanical maintenance and work such as painting or welding. This room classified as a F-1 Occupancy area. LBDCR-10-0033

3.3.1.2.2.10 Chemical Storage Room

~~(See 3.94.1.2 J.)~~ The Chemical Storage Room serves as a storage area for typical industrial chemicals. This room is classified as an H-1 Occupancy area. LBDCR-10-0002

3.3.1.2.2.11 Waste Processing Room

~~(See 3.94.1.2 K.)~~ (See SAR § 12.1.1.2.5)The Waste Processing Room serves as a processing area of non radioactive wastes. This room is classified as a F-1 Occupancy area. LBDCR-10-0002

3.3.1.2.2.12 Environmental Monitoring Laboratory

(See SAR § 12.1.1.2.6~~4.1.2 L.~~) The Environmental Monitoring Laboratory is designed for the purpose of preparing and analyzing samples associated with safety or regulatory compliance. This room is classified as a F-1 Occupancy area. LBDCR-10-0033

3.3.1.2.2.13 Building Construction

The TSB structure is a pre-engineered steel frame building with non-combustible construction throughout. The building is divided into two distinct areas referred to as Hardened and Non-Hardened areas. These two portions of the building are designed to be structurally independent of one another.

The Hardened area is completely enclosed by a tilt-up concrete panel system and cast-in-place roof slab, designed to resist tornado forces without failure. The exterior finish system of this portion of the building consists of metal building panels over insulation board.

The Non-Hardened area is a standard pre-engineered steel frame system with horizontal steel girt members, steel roof purlins and metal panel exterior walls and roof.

3.3.1.2.3 Security Diesel Generator

The Security Diesel Generator provides backup 480 volt power to select security and security related equipment during a loss of normal power. The Security Diesel Generator is not a requirement for safe operation of the plant. The Security Diesel Generator is designed for outdoor use and is located south of the TSB within a walled enclosure to reduce accessibility, but it is otherwise open to the environment. The fuel oil storage capacity tank is sized for 24 hours of continuous operation at 100% rated power output.

3.3.1.3 Cylinder Receipt and Dispatch Building (CRDB)

~~(See 4.1.3)~~ The overall layout of the CRDB is presented in Figures 3.3-8 and 3.3-9. The CRDB is located between two Separations Building Modules and directly north of the Technical Services Building. LBDCR-10-0033

3.3.1.3.1 Design Description

The CRDB is a one story building with a two story interior Bunkered Area. The CRDB utilizes steel frame and steel panel construction. The Bunkered Area inside the CRDB is comprised of reinforced poured concrete. The CRDB is approximately 240.3 m (788 ft) long, 48.1 m (158 ft) wide, and 14.8 m (48.5 ft) high (at the eave) and totals an area of 15,123 m^2 (162,782 ft^2) (including the 2nd floor of the Bunkered Area) . It is classified as an H-4 Occupancy area by the New Mexico Commercial Building Code (NMCBC). It is classified as a Type I-B Construction by the NMCBC and as a Type II (222) Construction by NFPA 220. The CRDB is separated from the TSB by three-hour fire-rated construction.

3.3.1.3.2 Functional Areas and Major Components

All UF_6 feed cylinders and empty product cylinders and uranium byproduct cylinders (UBCs) enter the facility through the CRDB. It is designed to include space for the following:

Outside the CRDB's Bunkered Area:

- Loading and unloading of cylinders
- Inventory weighing
- Preparation and storage of protective cylinder overpacks
- Buffer storage of feed cylinders
- Semi-finished product storage
- Final product storage
- Prepared cylinder storage

Inside the CRDB's Bunkered Area:

- Equipment decontamination
- Rebuilding of vacuum pumps
- UF_6 cylinder valve repair
- Solid waste collection and packaging
- Collection and treatment of liquid effluents
- Contaminated Material Handling-
- Mass spectrometry and chemical analysis
- Radiation monitoring
- Filtration and exhaust of gaseous effluent through Gaseous Effluent Vent Systems (GEVSs)
- HVAC equipment (supporting radiological and non-radiological portions of the CRDB)

Inside the CRDB steel butler building, there is an inner, two story stand-alone concrete structure referred to as the "Bunkered Area." Inside the CRDB Bunkered Area, the following functional areas are located on the ground floor:

- Ventilated Room (Room 143)
- Decontamination Workshop (Room 151)
- Vacuum Pump Rebuild Workshop (Room 154)
- Vacuum Pump Test Room (Room 155)
- Liquid Effluent Collection and Treatment Room (Room 156)
- Solid Waste Collection Room (161)
- Mass Spectrometry Laboratory (Room 136)
- Chemical Laboratory (Room 133)
- Sample Storage (Room 139)

Also inside the CRDB Bunkered Area, the following functional areas are located on the second floor:

- Gaseous Effluent Vent System (GEVS) Room (Room 242)
- Contaminated material handling Room (Room 261)
- Radiation Monitoring Laboratory (Room 262)

3.3.1.3.2.1 Solid Waste Collection Room

(See SAR § 12.1.1.3.1~~4.1.3 A.~~) The Solid Waste Collection Room is designed to process both wet and dry low-level radioactive solid waste. The Solid Waste Collection System is described in Section 3.5.13, Solid Waste Collection. Wet waste is categorized as radioactive, hazardous or industrial waste and includes assorted materials, oil recovery sludge, oil filters and miscellaneous hazardous wastes. Dry waste is also categorized as radioactive, hazardous or industrial waste and includes assorted materials, activated carbon, activated aluminum oxide, activated sodium fluoride, HEPA filters, scrap metal and miscellaneous hazardous materials. LBDCR-10-0033

This room contains approximately 288 m^2 (3,100 ft^2). It is classified as an H-4 Occupancy area. This area is separated from adjacent areas by two-hour fire-rated construction.

3.3.1.3.2.2 Vacuum Pump Rebuild Workshop

(See SAR § 12.1.1.3.2~~4.1.3 B.~~) The Vacuum Pump Rebuild Workshop is designed to provide space for the maintenance and re-building of plant equipment, mainly pumps which have been decontaminated in the Decontamination Workshop, and other miscellaneous plant equipment. LBDCR-10-0033

This room contains approximately 334.5 m^2 (3,600 ft^2). The workshop consists of an open area, a storage area and a data logging/progress chasing area. It is equipped with suitable area lighting, a degassing oven, heating, ventilating, and air conditioning (HVAC), CRDB GEVS, vacuum systems and a spray booth with a filter and extraction system. It is classified as an H-4 Occupancy area. This area is separated from the other adjacent areas by two-hour fire-rated construction.

3.3.1.3.2.3 Decontamination Workshop

(See SAR § 12.1.1.3.3.~~4.1.3 C.~~) The purpose of the Decontamination Workshop is to provide a maintenance facility for both UF_6 pumps and vacuum pumps. It is also used for the temporary storage and subsequent dismantling of failed pumps. The activities carried out within the Decontamination Workshop include receipt and storage of contaminated pumps, out-gassing, Perfluorinated Polyether (PFPE) oil removal and storage, pump stripping, and the dismantling and maintenance of valves and other plant components. LBDCR-10-0033

The Decontamination Workshop also provides a facility for the removal of radioactive contamination from contaminated materials and equipment. The Decontamination process consists of a series of steps including equipment disassembly, degreasing, decontamination, drying and inspection. Components commonly decontaminated include pumps, valves, piping, instruments, sample bottles, tools and scrap metal. The Decontamination System is described in Section 3.5.14, Decontamination Workshop.

The Decontamination Workshop is maintained at a lower pressure than any non-radiological surrounding areas. Therefore any equipment or personnel entering this room must go through an air-lock. For emergencies other emergency egress doors are provided.

This room contains approximately 362.3 m^2 (3,900 ft^2). It is classified as an H-4 Occupancy area. This area is separated from adjacent areas by two-hour fire-rated construction.

3.3.1.3.2.4 Ventilated Room

(See SAR § 12.1.1.3.4~~4.1.3 D.~~) The Ventilated Room is designed to provide space for the maintenance of chemical traps and cylinders. The Ventilated Room is also used for the temporary storage of full and empty chemical traps and the contaminated chemicals used in the chemical traps. LBDCR-10-0033

The activities carried out within the Ventilated Room include receipt and storage of saturated chemical traps, chemical removal and temporary storage, contaminated cylinder pressure testing, and UF_6 cylinder pump out and valve maintenance.

The Ventilated Room is maintained at a lower pressure than any non-radiological surrounding areas. Therefore, any equipment or personnel entering this room must go through an air-lock. For emergencies other emergency egress doors are provided.

Cylinders received at the site are expected to be in good working condition. Cylinders with deficient conditions are returned to an approved supplier for corrective maintenance and testing in accordance with ANSI N14.1-2001, provided the cylinder fully complies with all DOT transport requirements.

Cylinders with deficient conditions that do not fully comply with all DOT transport requirements must be corrected at the site. Such corrective maintenance may include valve replacement, plug replacement and post maintenance testing on containers with UF_6. Such corrective maintenanct and testing is performed in the CRDB Ventilated Room in accordance with ANSI N14.1-2001 and the LES QA Program.

This room contains approximately 297.3 m^2 (3,200 ft^2). It is classified as an H-4 Occupancy area. This area is separated from adjacent areas by two-hour fire-rated construction.

3.3.1.3.2.5 Liquid Effluent Collection and Treatment Room

~~*(See 4.1.3 E.)*~~ The Liquid Effluent Collection and Treatment Room is designed for the collection of potentially contaminated liquid effluents produced on site, which are monitored for contamination prior to processing. These liquid effluents are stored in tanks prior to processing. The effluents are segregated into significantly contaminated effluent, slightly contaminated effluent or non-contaminated effluent. Liquid effluents produced by the facility include hydrolysed uranium hexafluoride and aqueous laboratory effluent, degreaser water, citric acid, floor washings, miscellaneous condensates, and active area hand washings/shower water. The Liquid Waste Collection System is described in Section 3.5.12, Liquid Effluent Collection and Treatment System. The LECTS Room will also be used for trap filling. LBDCR-10-0033

This room contains approximately 323.2 m^2 (3,480 ft^2). It is classified as an H-4 Occupancy area. The Liquid Effluent Collection and Treatment Room is separated from adjacent areas by two-hour fire-rated construction.

3.3.1.3.2.6 Contaminated Material Handling Room

(See SAR § 12.1.1.3.6~~4.1.3 F.~~) The Contaminated Material Handling Room, located in the CRDB, provides an area for the Recycling Group to store protective clothing drums and other material/waste containers that have been assayed and released from the Safeguards item control program. This area will normally provide storage for containers awaiting Radiation Protection survey to be either unconditionally released or transferred to the solid waste collection system for additional processing. In addition, the Contaminated Material Handling Room will contain cabinets and bins with supplies to support the waste program and a connection to the CRDB GEVS to support ventilation engineering controls when required. LBDCR-10-0033

This room contains approximately 46.4 m^2 (500 ft^2). It is classified as an H-4 Occupancy area. The Contaminated Material Handling Room is separated from adjacent areas by two-hour fire-rated construction.

3.3.1.3.2.7 Gaseous Effluent Vent System (GEVS) Room

(See SAR § 12.1.1.3.7~~4.1.3 G.~~) The GEVS Room is located in the second floor of the CRDB's Bunkered Area, and contains the fan/filters systems and other major components for the CRDB GEVS. This GEVS is designed to remove UF_6, particulates containing uranium, and HF from potentially contaminated process gas streams. Pre-filters and HEPA filters remove particulates, including uranium particles, and impregnated activated charcoal filters remove any residual traces of uranium and HF. The GEVS are described in Section 3.4.9, Gaseous Effluent Vent Systems (GEVS). LBDCR-10-0033

This room contains approximately 355 m^2 (3,820 ft^2). It is classified as an H-4 Occupancy area and is separated from adjacent areas by two-hour fire-rated construction.

3.3.1.3.2.8 Mass Spectrometry Laboratory

(See SAR § 12.1.1.3.8~~4.1.3 H.~~) The Mass Spectrometry Laboratory is designed for the purpose of measuring the isotopic abundance of various uranium isotopes in prepared samples, the bulk comprising hydrolysed uranium hexafluoride. LBDCR-10-0033

This room contains approximately 167.2 m^2 (1,800 ft^2). It is classified as an H-4 Occupancy area and is separated from adjacent areas by two-hour fire-rated construction.

3.3.1.3.2.9 Chemical Laboratory

(See SAR § 12.1.1.3.9~~4.1.3 I.~~) The Chemical Laboratory is designed for the purpose of analyzing solid and liquid samples taken from all areas of the facility. It includes space for an analytical area, sub sampling area, wash area and weighing area, and a sample storage area. LBDCR-10-0033

This room contains approximately 257.8 m2 (2,775 ft2). It is classified as an H-4 Occupancy area and is separated from adjacent areas by two-hour fire-rated construction.

3.3.1.3.2.10 Radiation Monitoring Control Room

(See SAR § 12.1.1.1.10~~4.1.3 J.~~) The Radiation Monitoring Control Room is designed to be the point of demarcation between non-contaminated areas and potentially contaminated areas of the facility. It includes space for a hand and foot monitor, hand washing facilities, safety showers, and boot barrier access. LBDCR-10-0033

This room contains approximately 55.7 m^2 (600 ft^2). It is classified as an H-4 Occupancy area and is separated from adjacent areas by two-hour fire-rated construction.

3.3.1.3.2.11 Truck Bay/Shipping and Receiving Area

(See SAR § 12.1.1.3.11~~4.1.3 LK.~~) The Truck Bay, located at the North end of the CRDB, is used for the receipt of incoming UF_6 (48Y) feed cylinders, empty 48Y and 30B cylinders, and overpacks for 30Bs. The Bay is also used for the outgoing transport of UF_6 (30B) product cylinders in their designated DOT-approved overpacks, as well as the outgoing transport of UBCs for storage on the UBC Pad. The Truck Bay is also used as a place to load packaged low-level radioactive wastes onto trucks for transportation off site to a licensed processing facility or licensed disposal facility. It is also used for miscellaneous shipping and receiving. LBDCR-10-0002 LBDCR-10-0033

This area is approximately 35.2 m (115.5 ft) x 47.5 m (156 ft) and totals 1,672 m2 (18,018 ft2). It is classified as an H-4 Occupancy area.

3.3.1.3.2.12 Cylinder Storage Areas

(See SAR § 12.1.1.3.12 ~~4.1.3 ML.~~) The majority of the floor area is used as lay-down space for the cylinders, for both storage and preparation. The cylinders are placed on specially designed cradles called stillages to stabilize them while being stored in the CRDB. LBDCR-10-0002 LBDCR-10-0033

Cylinders are delivered to the facility in transport trucks. The trucks enter the CRDB through the main vehicle loading bay, located at the North end of the building, which is equipped with vehicle access platforms that aid with cylinder loading and unloading. Three double girder bridge cranes on two sets of crane rails handle the cylinders within the CRDB. Each crane spans half the width of the CRDB. The two bridge cranes on the West side run the full length of the building. The third bridge crane on the East side services the area North of the Bunkered Area.

After delivery, the cylinders are processed for receipt as either empty UBCs (48-in cylinders) or empty product cylinders (30-in cylinders) or UF_6 feed cylinders (48-in cylinders). They are inspected and weighed and moved to their appropriate locations. UF_6 feed cylinders are delivered to a storage area in the CRDB.

When required for processing, the cylinders, which have been placed in storage areas are moved by the overhead cranes to the stillages and rail transporter located in the cylinder transporting and stillage area at the South end of the CRDB. The rail transporter moves cylinders from the CRDB to the adjacent SBM UF_6 handling areas. Cylinders are removed from the facility in the same fashion.

3.3.1.3.3 Building Construction

The CRDB superstructure will consist of a QA Level-1 (Graded) steel building shell, with a separate and seismically independent interior Bunkered Area that meets all QA Level-1 requirements. The building is divided into two distinct areas referred to as the Bunkered Area and the Non-Bunkered area (also referred to as CRDB steel building or CRDB building shell). These two portions of the building are designed to be structurally independent of one another.

The CRDB superstructure (Non-Bunkered Area) is a standard pre-engineered steel frame building with horizontal steel girt members, steel roof purlins, metal panel exterior walls and roof, with non-combustible construction throughout. The building shell is designed to withstand the effects of external events (i.e., seismic, tornado and high wind, snow and ice load, and maximum local precipitation and flooding) as reflected in Section 3.2, except tornado missiles. It is considered acceptable if the metal wall and roof panels separate from the steel superstructure under extreme tornado wind conditions. The CRDB superstructure ~~will not be~~ is not required to provide missile protection or to prevent water intrusion. The floor of each area consists of a 20.3 cm (8") reinforced concrete slab. Floor areas where rails systems are emplaced for the transport of UF_6 cylinders consist of a 61 cm (24") reinforced concrete slab. LBDCR-10-0002

- Centrifuge Assembly Area 'A' LBDCR-10-0009
- Centrifuge Assembly Area 'B'
- Centrifuge Assembly Area "C"
- Assembled Centrifuge Storage Area
- Building Office Area
- Centrifuge Test and Post Mortem Facilities
- Electrical ~~board~~ rooms on the ~~East and West side~~South, East and West sides
- Air compressor room South side

3.3.1.4.2 Functional Areas and Major Components

3.3.1.4.2.1 Centrifuge Component Storage Area

The Centrifuge Component Storage Area serves as the initial receipt location for the centrifuge parts. It is designed to store up to four weeks stock of centrifuge components . These components are delivered by truck in specifically designed containers, which are then packed into International Organization for Standardization (ISO) freight containers. The containers are off-loaded via fork lift truck and placed in the storage area through one of two roll up doors located at the east end of the CAB. LBDCR-10-0009 LBDCR-10-0009

The Centrifuge Component Storage Area acts as an acclimatization area to allow components to equilibrate with the climatic conditions of the Centrifuge Assembly Area.

Transfer of components and personnel between the Centrifuge Component Storage Area and the Centrifuge Assembly Areas is via an airlock to prevent ingress of airborne contaminants.

3.3.1.4.2.2 Centrifuge Assembly Areas

Centrifuge components are assembled into complete centrifuges in ~~this area~~these areas. Prior to installation into the cascade, the centrifuge has to be conditioned, which is done in the Centrifuge Assembly Areas prior to storage in the Assembled Centrifuge Storage Area.

A separate installation team will access this area and transfer the assembled and conditioned centrifuges to the Cascade Halls for deployment.

3.3.1.4.2.3 Building Office Area

A general office area is located adjacent to the Centrifuge Assembly Area. It contains the main personnel entrance to the building as well as entrances to the Centrifuge Component Storage Area and Centrifuge Assembly Area. It is a two-story area that includes the following: LBDCR-10-0009

- Offices
- Locker Rooms - The locker rooms provide space where employees can dress in protective clothing as required
- Canteen LBDCR-10-0009

- Two Computer Server Rooms
- Maintenance Area
- Inspection and Test Laboratory
- Air Locks
- Air Compressor Room – (one of two; the other air compressor room is located on the South side of the CAB)
- An Elevator

3.3.1.4.2.4 Centrifuge Test and Post Mortem Facilities

The Centrifuge Test Facility is designed to:

- Provide a means of functionally testing the performance of production centrifuges to ensure compliance with design parameters
- Investigate production and operational problems.
- Test either a single centrifuge or two simultaneously

The Centrifuge Post Mortem Facility is designed for investigating problems with production centrifuges. Based on 30 years of European experience, the demand for centrifuge post mortems is infrequent.

The principal functions of the Centrifuge Post Mortem Facility are:

- To facilitate dismantling of contaminated centrifuges using equipment and processes, which minimize the potential to contaminate personnel or adjacent facilities
- To prepare potentially contaminated components and materials for transfer prior to disposal.

Centrifuges are brought into the facility on a specially designed transport cart . The facility is also equipped with radiological monitoring devices, toilets and washing facilities, and hand, foot and clothing personnel monitors to detect surface contamination.

The Centrifuge Post Mortem Facility includes a centrifuge dismantling area and an inspection area. The centrifuge dismantling area includes a stand onto which the centrifuge to be dismantled is mounted providing access to the top and bottom of the centrifuge. A local jib crane is located over the stand to enable removal of the centrifuge from the transport cart and facilitate loading onto the stand. The inspection area includes an inspection bench, portable lighting, a microscope, an endoscope and a digital video/camera.

3.3.1.4.3 Building Construction

The CAB is a metal building that is constructed on a concrete slab. The floors of the CAB Assembled Centrifuge Storage Area have a floor profile quality classification of flat in accordance with ACI 117 to aid in the transport of assembled centrifuges. LBDCR-10-0009

Floors in the CAB (except for certain office areas) are of exposed concrete with a washable epoxy coating finish. The coatings are designed to resist process chemicals, decontamination agents and radiation.

3.3.1.5 Not Used

3.3.1.6 Uranium Byproduct Cylinder (UBC) Storage Pad

(See SAR § 12.11.~~44.1.6~~) The facility utilizes an area outside of the CRDB for storage of UBCs, which contain UF_6 that is depleted in ^{235}U. The tails are stored under vacuum in corrosion resistant Type 48Y cylinders. The UBC Storage Pad will also be used to store empty feed cylinders that are not immediately reconnected to the facility. The UBC Storage Pad is shown on Figure 3.3-1, Facility Buildings and Areas. LBDCR-10-0033

3.3.1.6.1 Design Description

The UBC Storage Pad is designed to provide storage for UBCs and six months of empty feed cylinders. Approximately 625 UBC per year are filled for storage. The UBC Storage pad is sized to accommodate 15,727 cylinders (capacity equivalent to 30 years of facility operation). These cylinders are stacked two high. Saddles are used to store the cylinders approximately 200 mm (8 in) above ground level. The UBC Storage Pad occupies approximately 8.50 ha (21 acres).

3.3.1.6.2 Functional Areas and Major Components

The UBC Storage Pad layout is based on moving the cylinders with cranes and powered vehicles. Powered vehicles are used to move the cylinders from the CRDB to the UBC Storage Pad. A double girder Gantry crane is used to remove the cylinders from the powered vehicles and place them in the UBC Storage Pad. The Gantry crane is designed to double stack the cylinders in the storage area.

3.3.1.6.3 Construction

The UBC Storage Pad is constructed of a concrete pad with a dedicated collection and drainage system. Vehicle crash barriers are located along the site roads outside of the Controlled Access Area adjacent to the storage area. The entire area is fenced for security and radiological protection purposes.

3.3.1.7 Central Utilities Building

~~*(See 4.1.7)*~~ The Central Utilities Building (CUB) is shown on Figure 3.3-12. LBDCR-10-0033

3.3.1.7.1 Design Description

The CUB has an approximate total area of 3044 m^2 (32,766 ft^2). It is classified as a F-1 Occupancy area by the New Mexico Commercial Building Code (NMCBC). It is classified as a Type II-B Construction by the NMCBC and as a Type II (000) Construction by NFPA 220. The Central Utilities Building is designed to meet the occupant and exiting requirements set by the International Fire Code and the NMCBC.

3.3.1.7.2 Functional Areas and Major Components

The Central Utilities Building houses two diesel generators, which provide the site with standby power. The Standby Generator System is discussed in Section 3.5.10, Standby Diesel Generator System. The building contains day tanks, switchgear, and control panels. The rooms housing the diesels are constructed independent of each other with adequate provisions made for maintenance, equipment removal and equipment replacement.

The diesel fuel unloading area provides tanker truck access to the two above ground tanks, which provide diesel fuel storage. Secondary containment is provided to contain spills or leaks from the above ground diesel fuel tanks.

The CUB also houses the centrifuge cooling water pumps~~, deionized water systems~~ and air compressors. These systems are described in Sections 3.5.5, Cooling Water System~~, 3.5.4, Water Supply,~~ and 3.5.3, Compressed Air System, respectively. LBDCR-10-0018

3.3.1.7.3 Building Construction

The CUB superstructure is cast in place concrete construction with shear walls and pilasters that support steel framing for roof slabs.

The CUB roof structure consists of concrete slabs poured over steel decking supported by wide flange beams (purlins). Rigid insulation and multi-ply composite roofing system is installed atop the concrete roof slab. The roof assembly will have a minimum combined thermal resistance of R-20.

Exterior and interior walls will be cast-in-place concrete load bearing shear walls. Exterior walls will have a minimum combined thermal resistance value of R-10.

Interior non-load bearing walls are constructed of 200 mm (8 in) concrete block with a painted finish. These interior walls extend to the underside of the structure where required.

Floors consist of exposed concrete with a washable epoxy coating finish.

3.3.1.8 *(See SAR § 12.1.1.6~~4.1.8~~)* Administration Building

LBDCR-10-0033

3.3.1.8.1 Design Description

The Administration Building is near the TSB. It is over 3,000 m2 (32,000 ft2) and 6.0 m (19.8 ft) high. It is classified as a B Occupancy area by the New Mexico Commercial Building Code (NMCBC). It is classified as a Type II-B Construction by the NMCBC and as a Type II (000) Construction by NFPA 220. The Administration Building is designed to meet the occupant, and exiting requirements set by the International Fire Code and the NMCBC. The entire building is sprinklered.

3.3.1.8.2 Functional Areas and Major Components

The general office areas for the facility are located in the Administration Building. Personnel enter the Administration Building and general office areas via the main lobby.

Over 50 work locations are provided for the plant office staff. The office environment consists of private, semiprivate, and open office space. The lobby is designed to also act as an assembly area for emergency planning purposes. Area has been allocated for the storage of emergency equipment and supplies and emergency monitoring equipment. It also contains a kitchen, break room, conference rooms, and building service facilities such as a mechanical equipment room. An open office layout allows for flexibility in space allocation.

3.3.1.8.3 Building Construction

The Administration Building superstructure is designed of structural steel framing.

The roof structure consists of metal decking over structural steel framing. The metal decking is covered with a built-up roof system. The roof assembly has a minimum combined thermal resistance value of R-20.

Exterior walls consist of a combination of architectural metal panels and a curtain wall glazing system. The exterior wall assembly has a minimum combined thermal resistance value of R-10. The interior side of the exterior wall is faced with 16 mm (5/8 in) gypsum wallboard.

Interior non-load bearing walls are constructed of 92 mm (4 in) metal studs filled with batt insulation and faced with 16 mm (5/8 in) gypsum wallboard. Walls extend to 150 mm (6 in) above the ceiling or to the underside of the structure where required.

3.3.1.9 Not Used

3.3.1.10 (~~See~~ *See SAR § 12.1.1.7~~4.1.10~~)* Site Security Buildings

LBDCR-10-0033

3.3.1.10.1 Design Description

The main Security Building is located at the entrance to the facility. It functions as a security checkpoint for incoming and outgoing personnel. Employees and visitors that have access approval are screened at the main building. A smaller Gatehouse has been placed at the secondary site entrance. Vehicle traffic including common carriers, such as mail delivery trucks, are screened at this location.

The main Security Building also contains the Visitor Center. There are adequate physical barriers, locked doors, etc to separate the visitor accessible areas from areas designed to support the security.

3.3.1.10.2 Functional Areas and Major Components

The main and secondary Security Buildings are located at the entries to the site. They are classified as a B Occupancy area by the New Mexico Commercial Building Code (NMCBC). It is classified as a Type II-B Construction by the NMCBC and as a Type II (000) Construction by NFPA 220.These buildings are designed to meet the occupant and exiting requirements set by the International Fire Code and the NMCBC.

The Entry Exit Control Point (EECP) for the facility is located in the main Security Building. All personnel access to the facility occurs at this location. Vehicular traffic passes through a security checkpoint before being allowed to park. Parking is located outside of the Controlled Access Area (CAA) security fence.

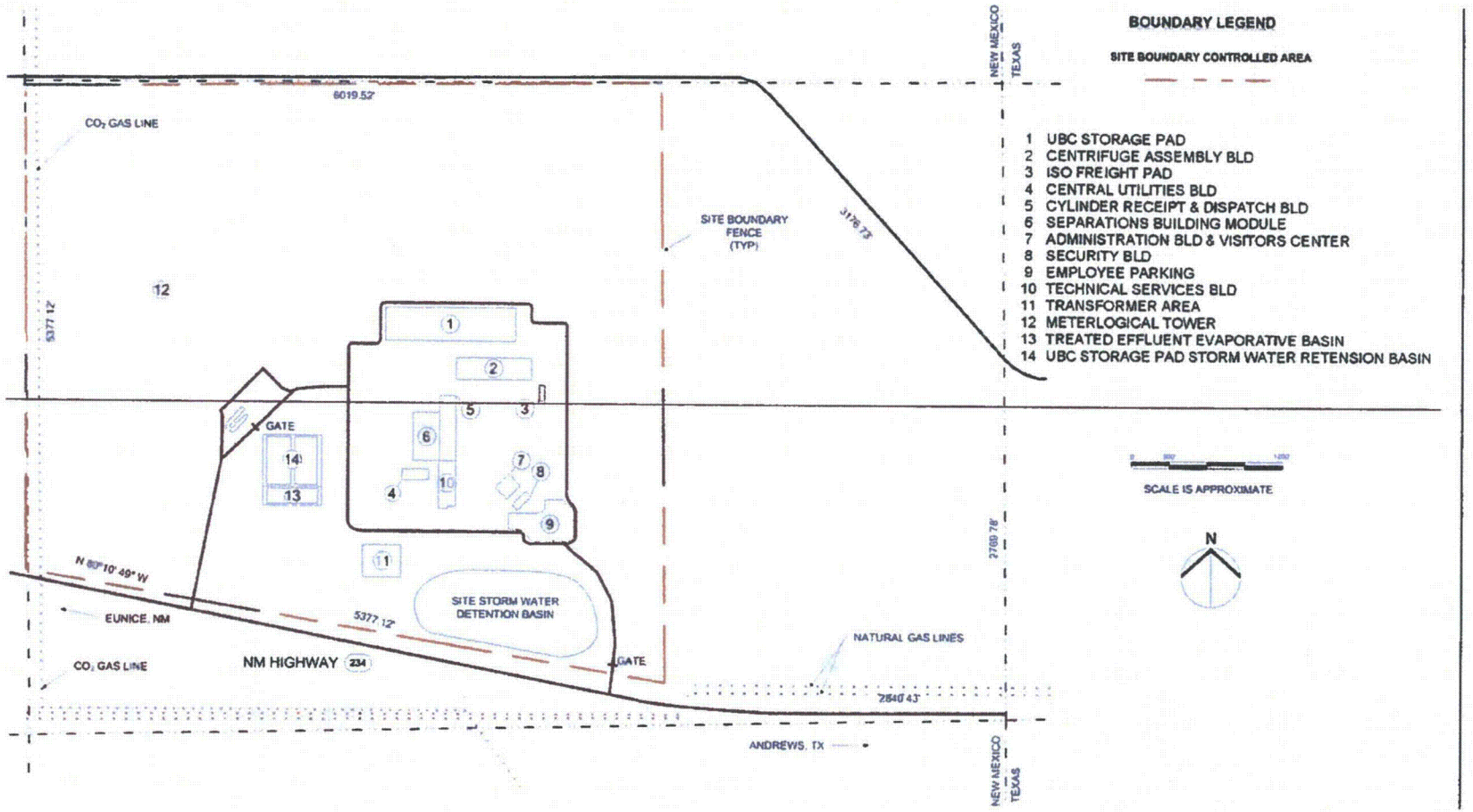

LBDCR-10-0009

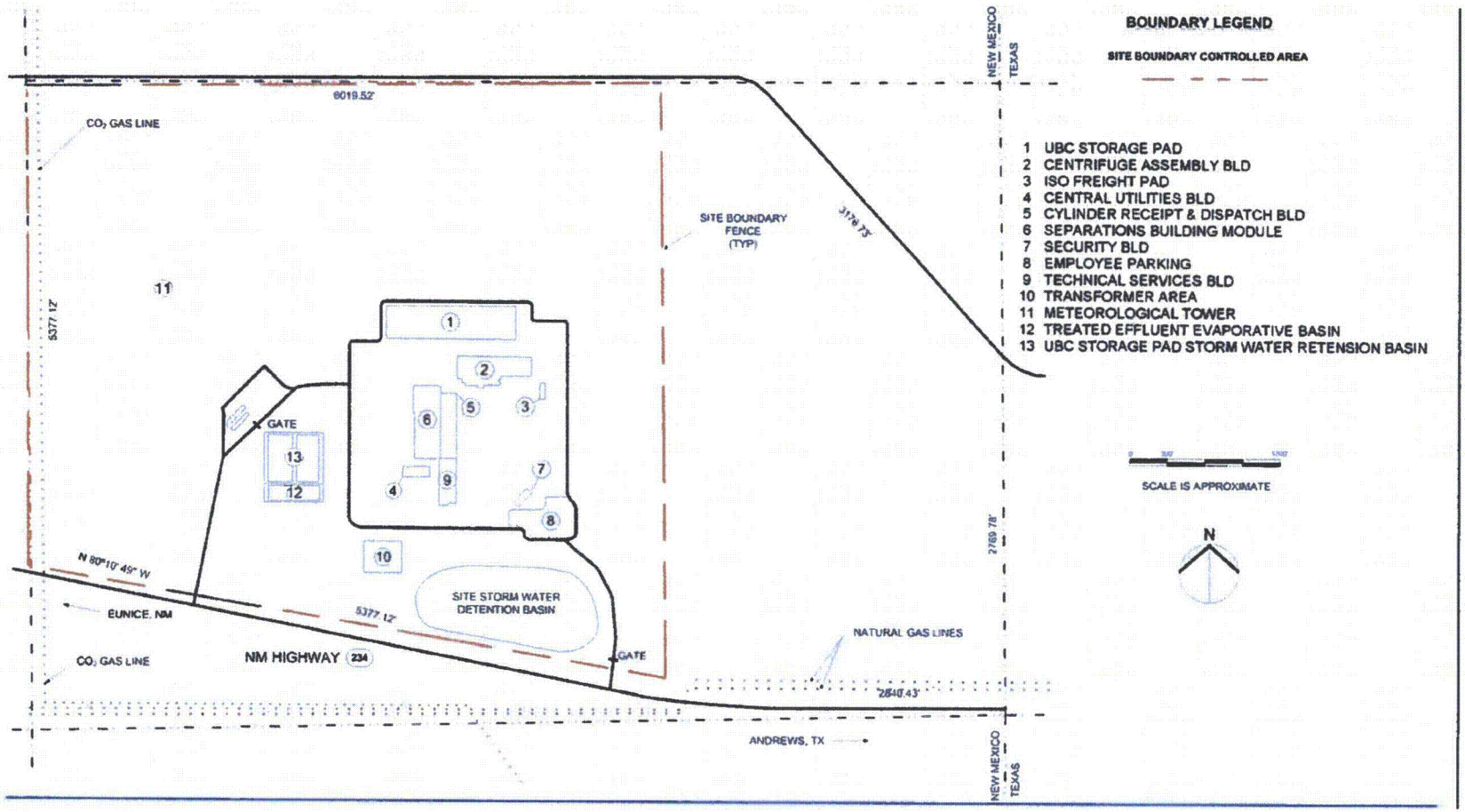

LBDCR-10-0009

Figure 3.3-1 Facility Buildings and Areas

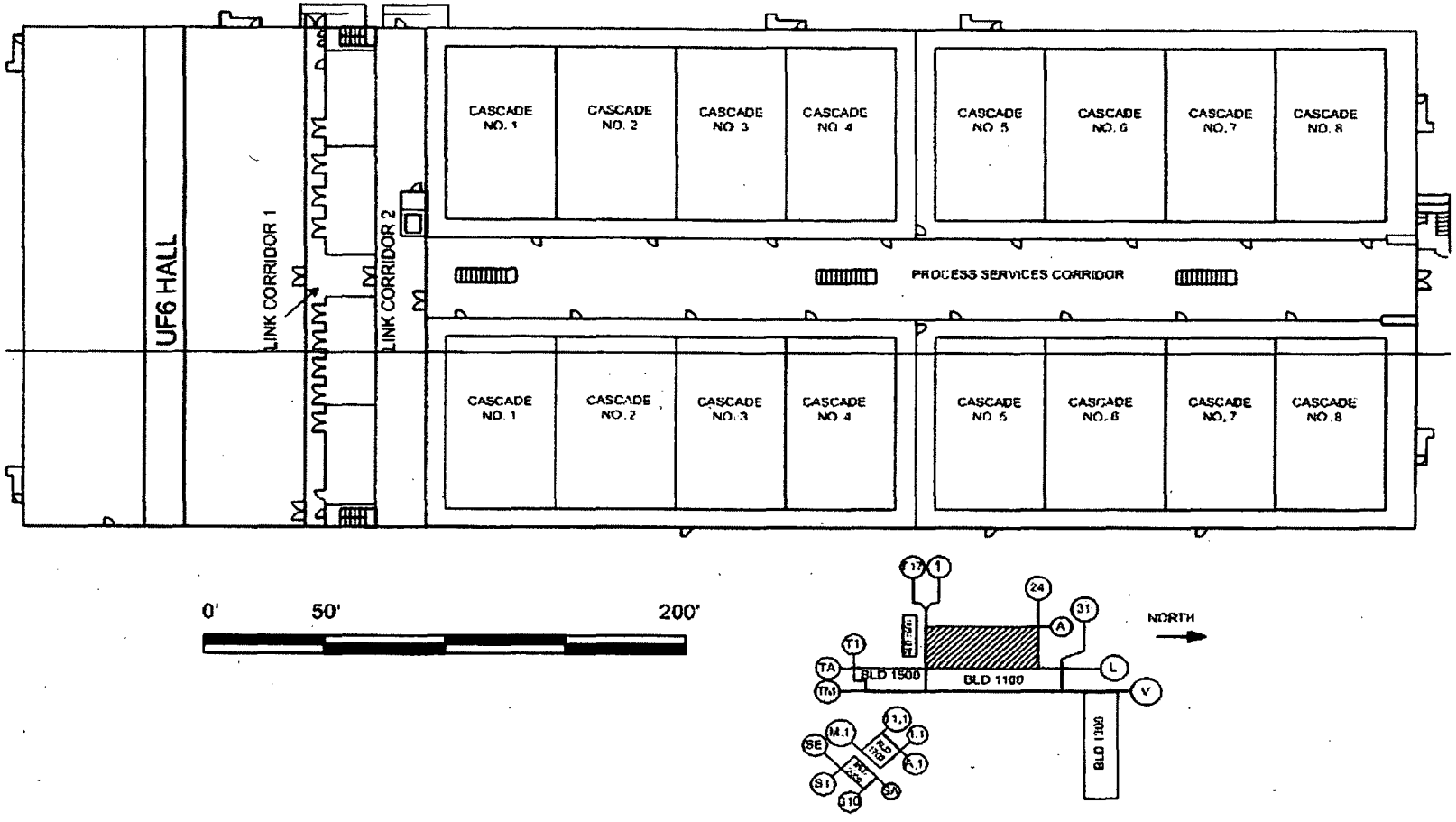

LBDCR-10-0009

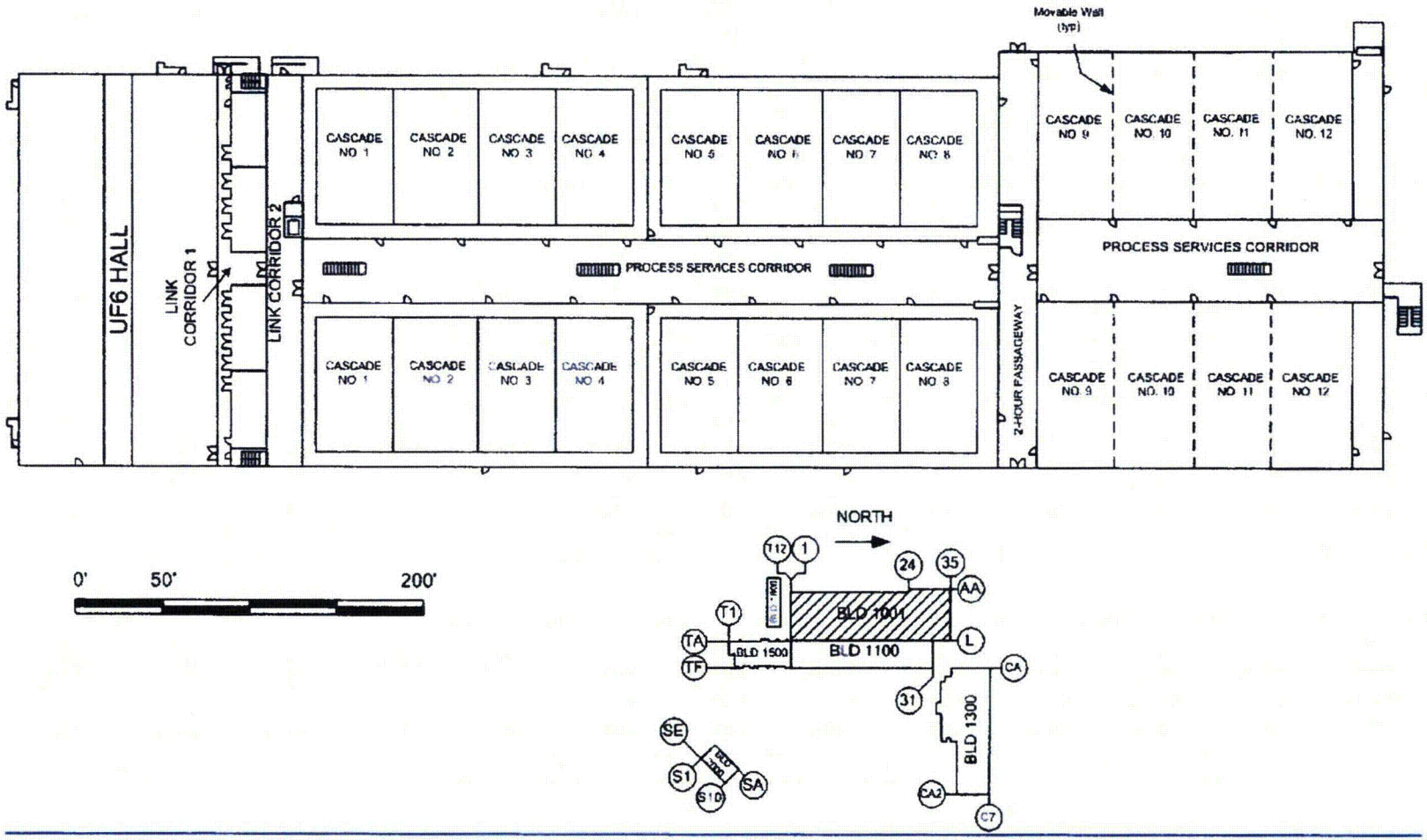

LBDCR-10-0009

Figure 3.3-2 Separations Building Module First Floor

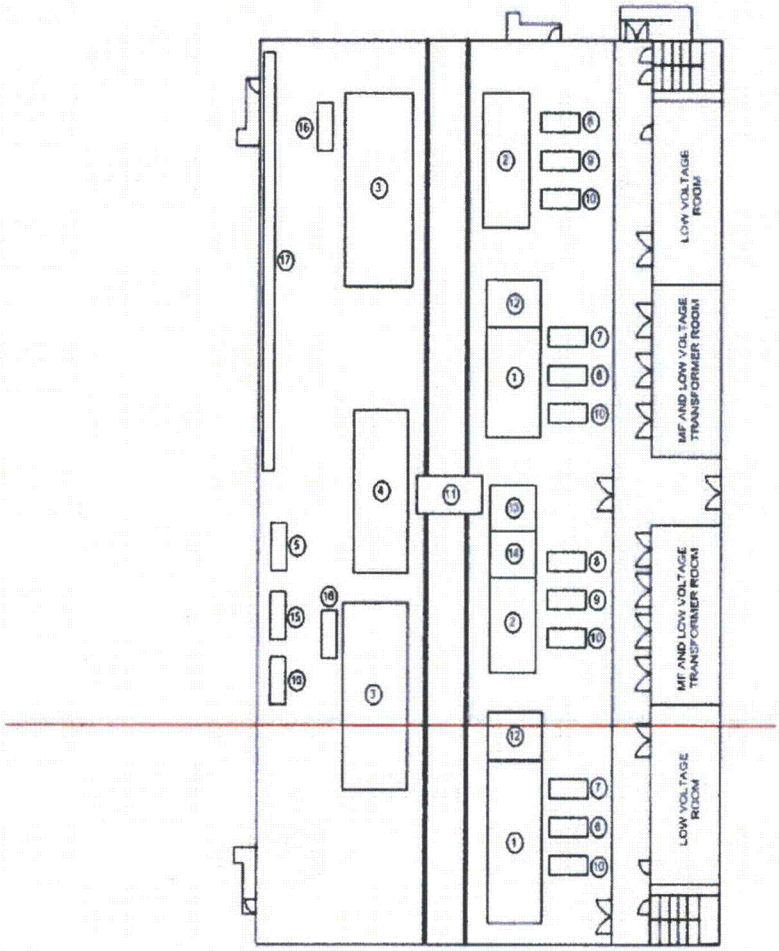

1 SOLID FEED STATIONS
2 PRODUCT STATIONS
3 TAILS STATIONS
4 AUTOCLAVES
5 DONOR RECEIVER VACUUM PUMP TRAP SET
6 FEED PURIFICATION COLD TRAP
7 FEED PURIFICATION VACUUM PUMP TRAP SET
8 PRODUCT VACUUM PUMP TRAP SET
9 PRODUCT VENT COLD TRAP
10 COLD TRAP HEATER/CHILLER SET
11 RAIL TRANSPORTER
12 FEED PURIFICATION STATIONS
13 DONOR STATIONS
14 RECEIVER STATIONS
15 DONOR RECEIVER COLD TRAP
16 TAILS VACUUM PUMP TRAP SET
17 PUMPED EXTRACT GEVS

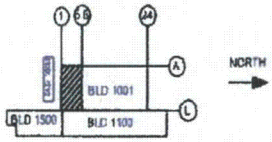

LBDCR-10-0009

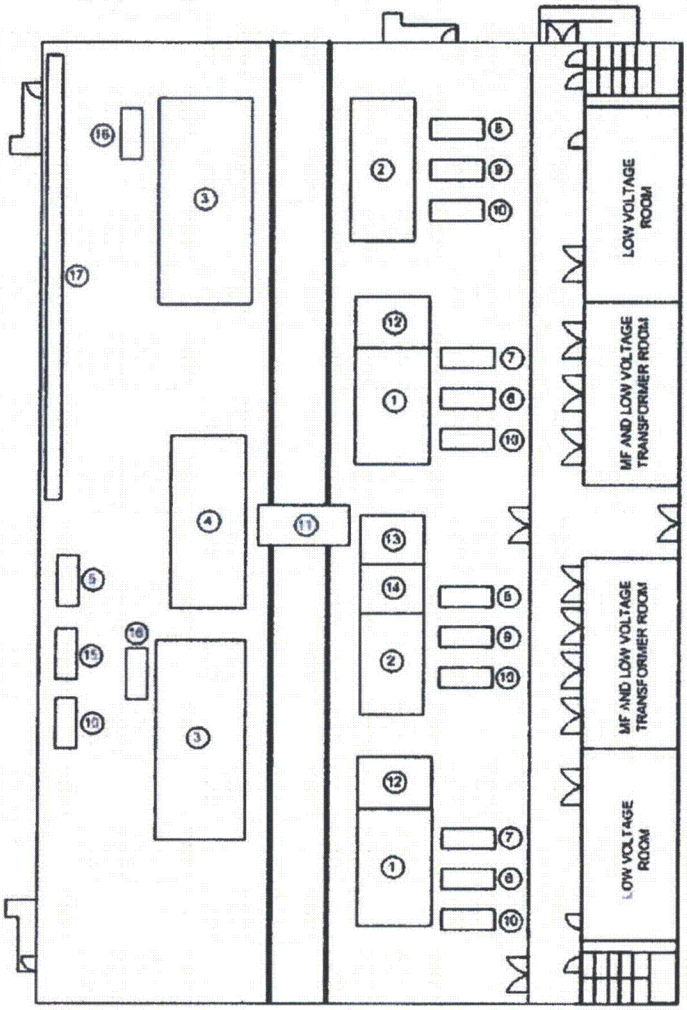

LBDCR-10-0009

1 SOLID FEED STATIONS
2 PRODUCT STATIONS
3 TAILS STATIONS
4 AUTOCLAVES
5 DONOR RECEIVER VACUUM PUMP TRAP SET
6 FEED PURIFICATION COLD TRAP
7 FEED PURIFICATION VACUUM PUMP TRAP SET
8 PRODUCT VACUUM PUMP TRAP SET
9 PRODUCT VENT COLD TRAP
10 COLD TRAP HEATER/CHILLER SET
11 RAIL TRANSPORTER
12 FEED PURIFICATION STATIONS
13 DONOR STATIONS
14 RECEIVER STATIONS
15 DONOR RECEIVER COLD TRAP
16 TAILS VACUUM PUMP TRAP SET
17 PUMPED EXTRACT GEVS

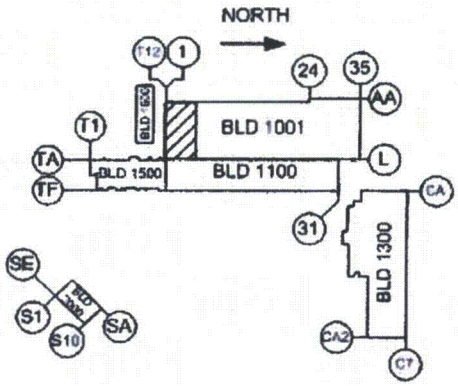

Figure 3.3-3 UF_6 Handling Area Equipment Location

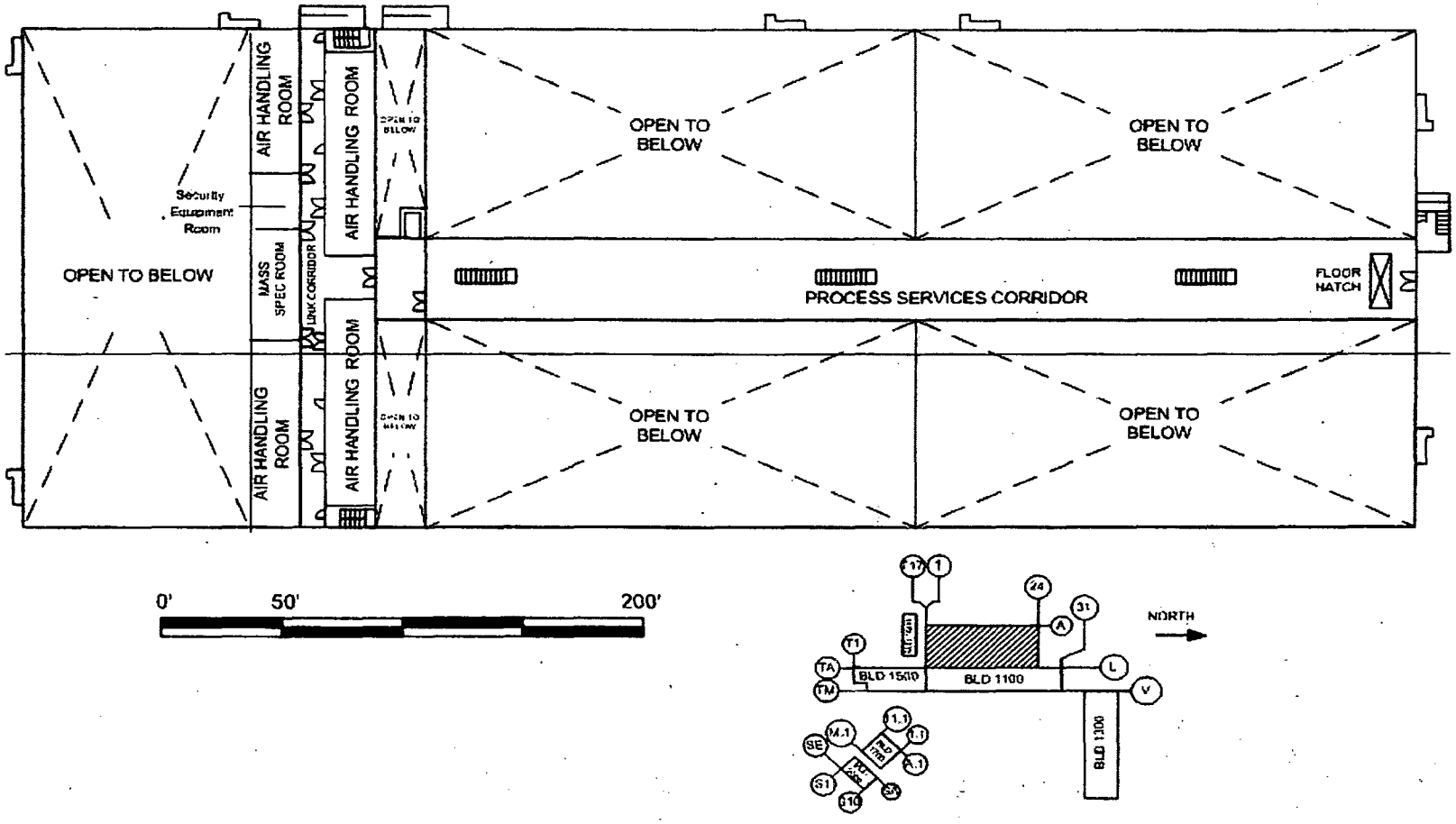

LBDCR-10-0009

B. Tails Pumping Trains

Each cascade has two dedicated Tails Pumping Trains connected in parallel. One pump train is on-line while the other is in standby. Each train has one set of pumps andeach set consists of two vacuum pumps in series mounted on a common frame. Manual and automatic valves isolate each pump set.

C. Secondary Header

Tails Pumping Trains discharge into the secondary header. The secondary header connects with the Tails Low Temperature Take-off Stations.

D. Tails Low Temperature Take-off Stations (LTTS)

The Tails LTTS consists of a composite-wall insulated box. The Tails LTTS panels have a non-flammable insulated core, and are vapor sealed to prevent ice build-up within the insulation. The Tails LTTS is designed to prevent ice build-up within the Tails LTTS. The Tails LTTS totally encloses the cylinder, cylinder support structure, and rails. The front of the Tails LTTS has a single door through which the cylinder is inserted and removed. The back of the Tails LTTS has an opening through which the cylinder is connected to the UF_6 piping. A rubber bellows is fitted around the back opening, which envelops the cylinder valve, to prevent cooled air from leaking out of the Tails LTTS. A hot air blower is used to keep the valve and its surrounding area heated. The door frames, access port, rubber collar, and defrost condensate piping are provided with heat tracing to prevent ice build-up.

Each Tails LTTS has a chiller unit, which is mounted on the top of the Tails LTTS. This unit provides the cold air necessary to decrease the temperature in the box sufficiently to remove the thermal energy from the UF_6 gas and cause it to desublime in the cylinder. The chiller unit has a defrost cycle to remove ice from the cooling coils. This is done with a defrost heater at the coils.

The valves between the secondary header and the Tails LTTS are mounted in separate frames that are not attached to the Tails LTTS; however, they are in close proximity.

Each Tails LTTS is provided with a weighing system which incorporates a weigh frame, four load cells, and associated weighing instrumentation. The weigh system provides continuous measurement of the mass of UF_6 accumulating in the 48Y UBC.

E. Tails Evacuation Pump/Chemical Trap Set

The Tails Evacuation Pump/Chemical Trap Set consists of a mixed bed (activated carbon ~~trap,~~ an aluminum oxide (Al_2O_3)) trap, and an insulated vacuum pump with an aluminum oxide oil trap on the pump suction and a mechanical oil trap (exhaust filter) on the pump discharge~~internal nitrogen purge and oil traps on either side~~. A flow restrictor (IROFSC21) is located on the suction of the pump after the aluminum oxide oil trap. The exhaust from the vacuum pump goes to the Pumped Extract GEVS. LBDCR-09-0110

The activated carbon in the mixed bed trap removes small traces of UF_6 and ~~T~~the aluminum oxide ~~trap~~ removes HF. The ~~O~~oil traps ~~are installed before and after the vacuum pump to~~ prevent oil migration both upstream and into the Pumped Extract GEVS. LBDCR-09-0110

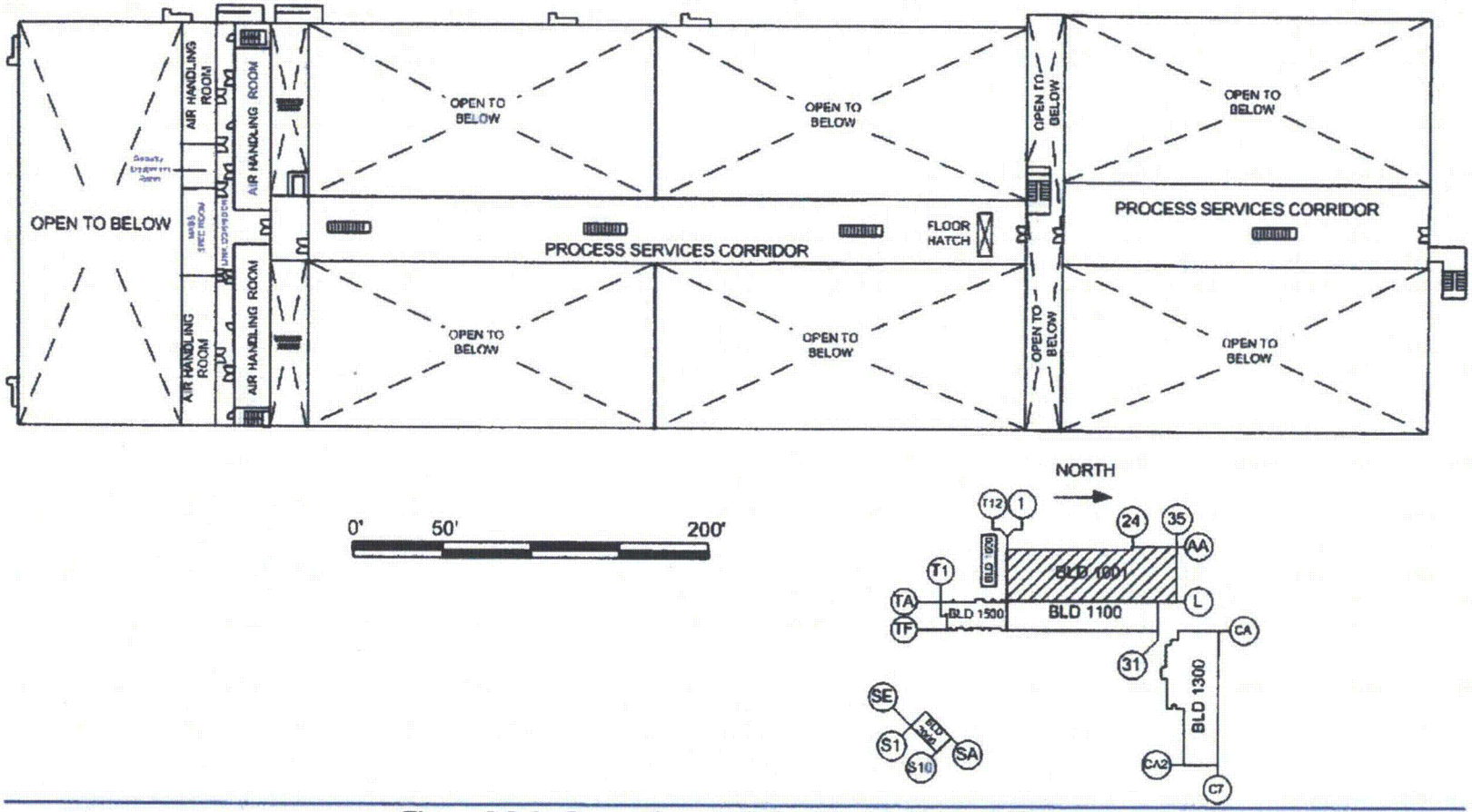

LBDCR-10-0009

Figure 3.3-4 Separations Building Module Second Floor

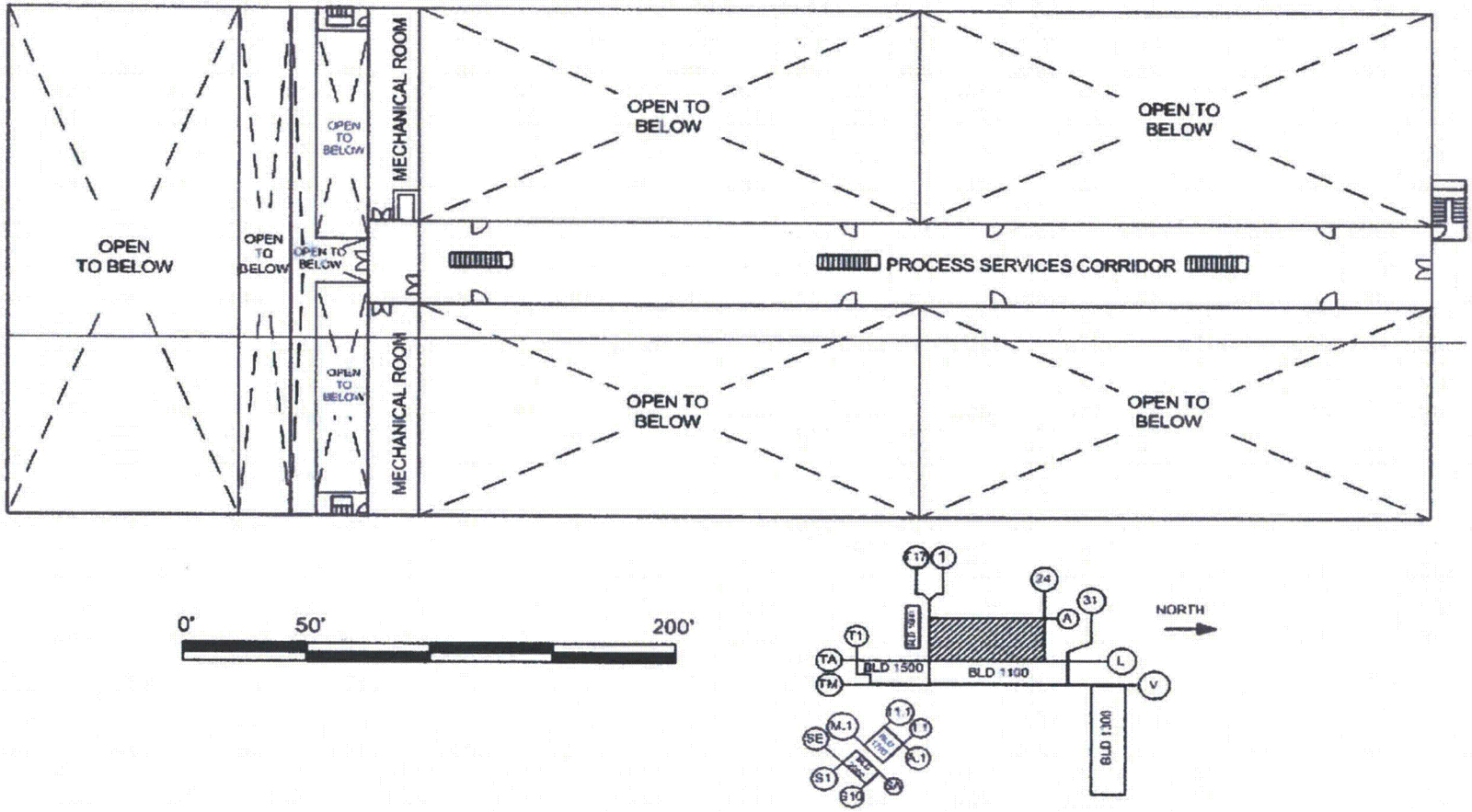

LBDCR-10-0009

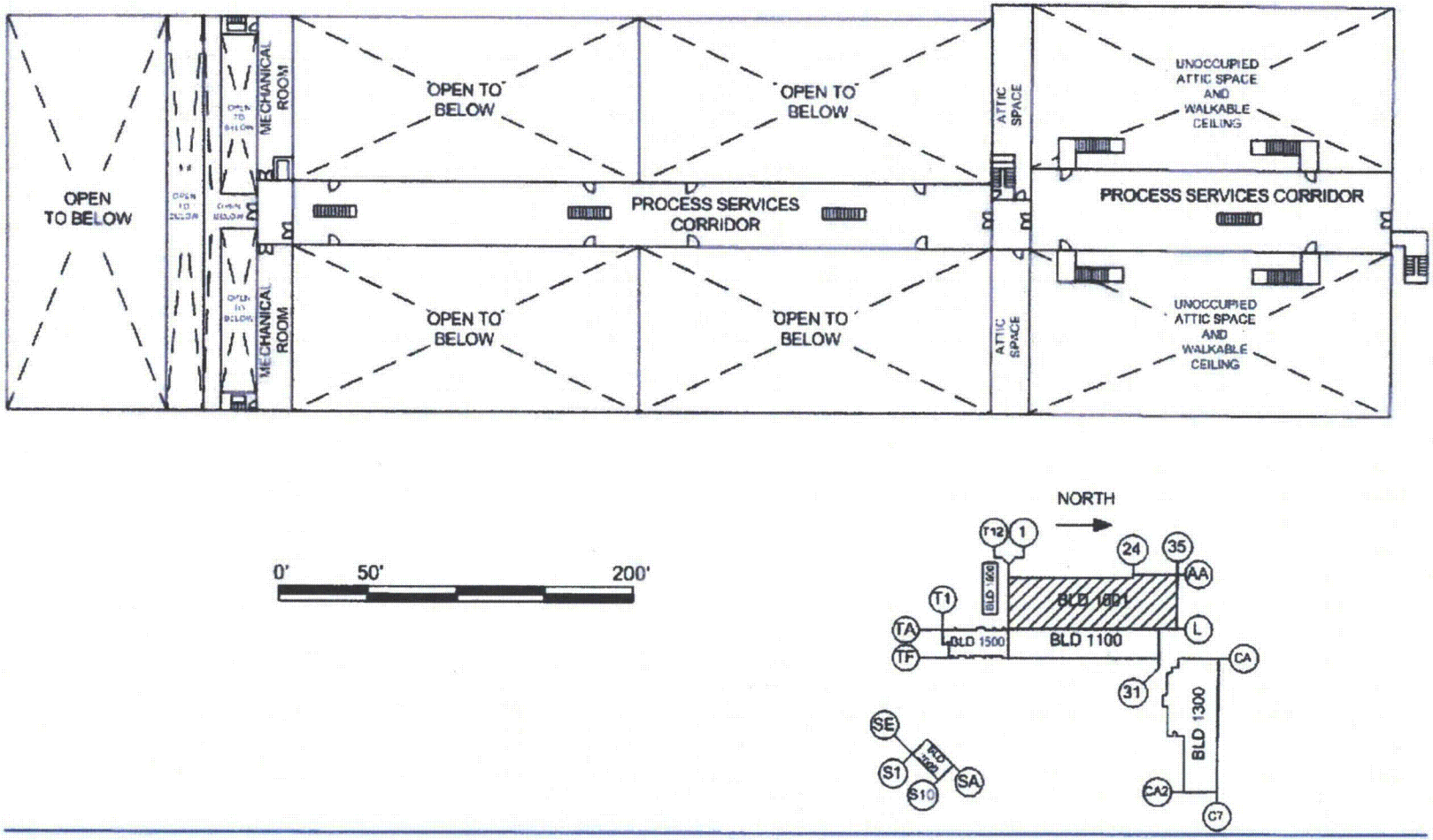

LBDCR-10-0009

Figure 3.3-5 Separations Building Module Third Floor

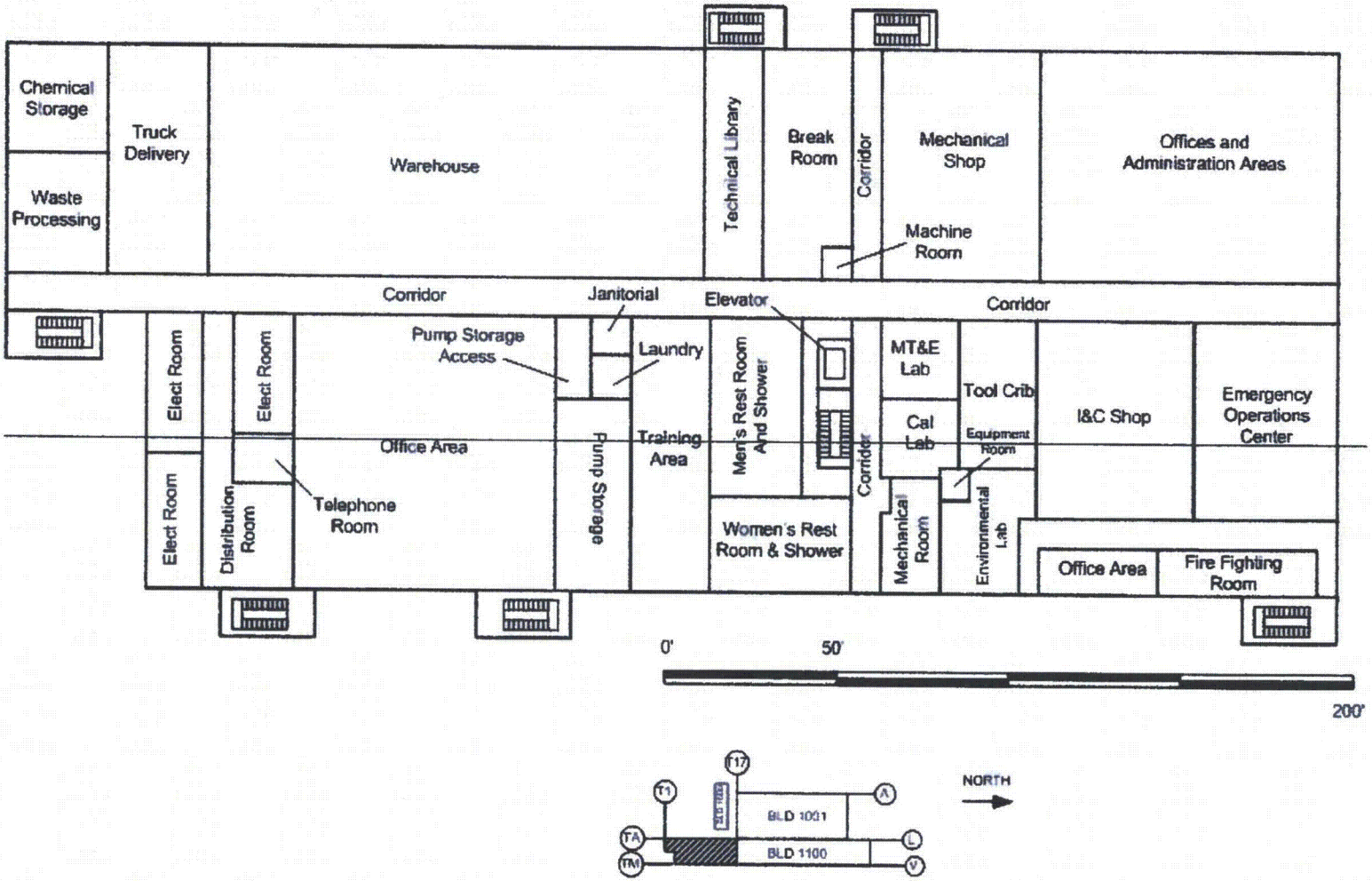

LBDCR-10-0009

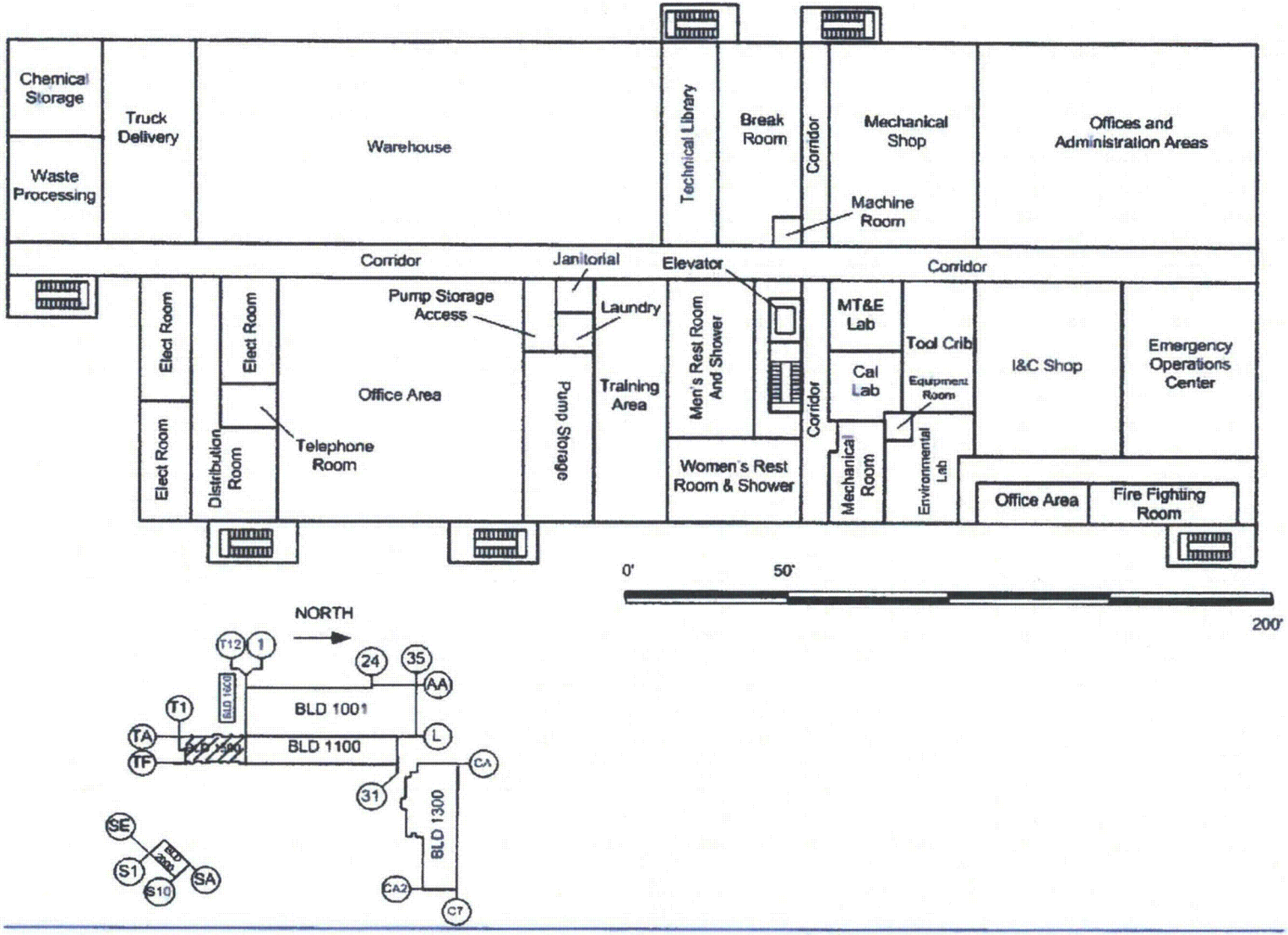

Figure 3.3-6 Technical Services Building First Floor

LBDCR-10-0009

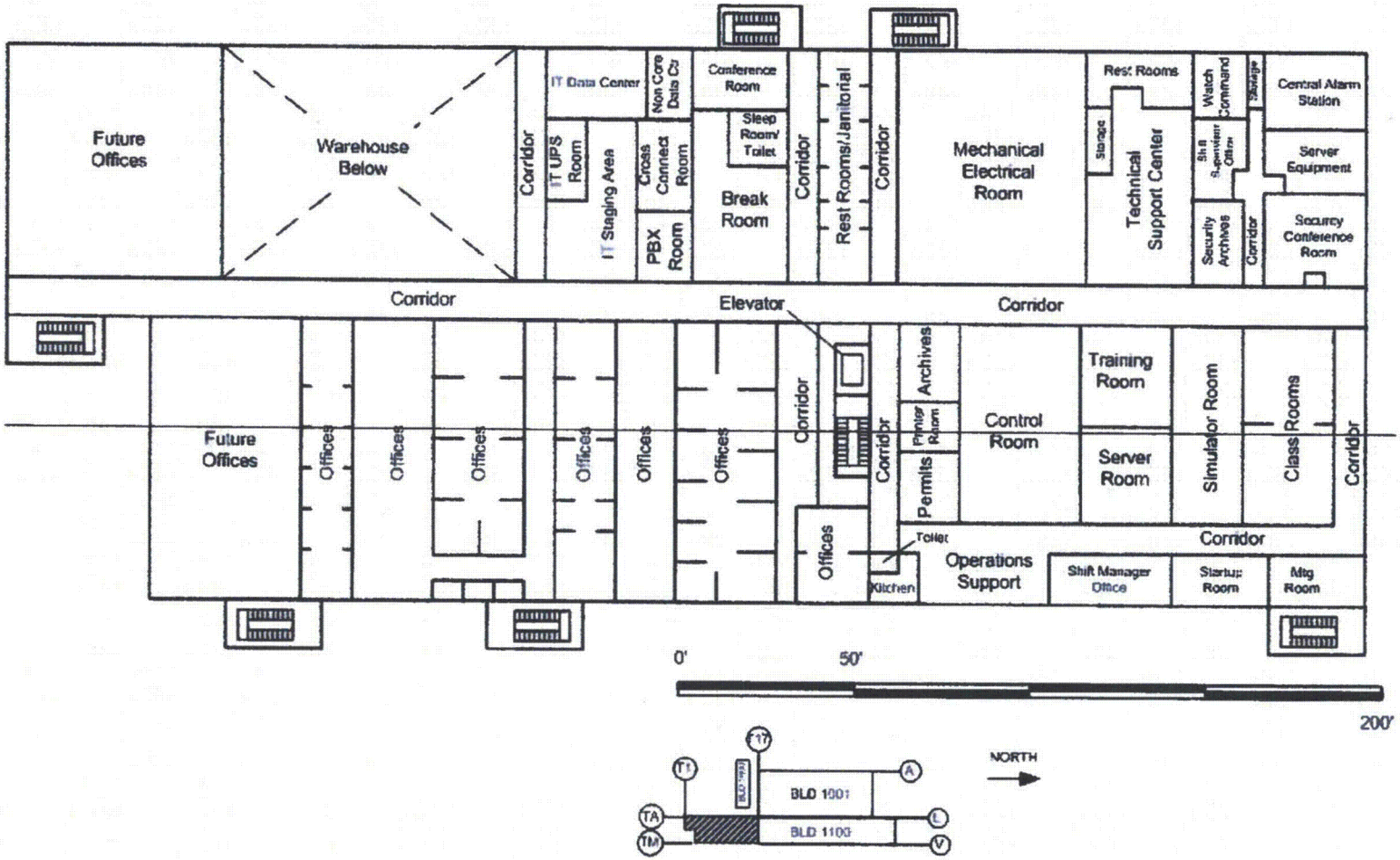

LBDCR-10-0009

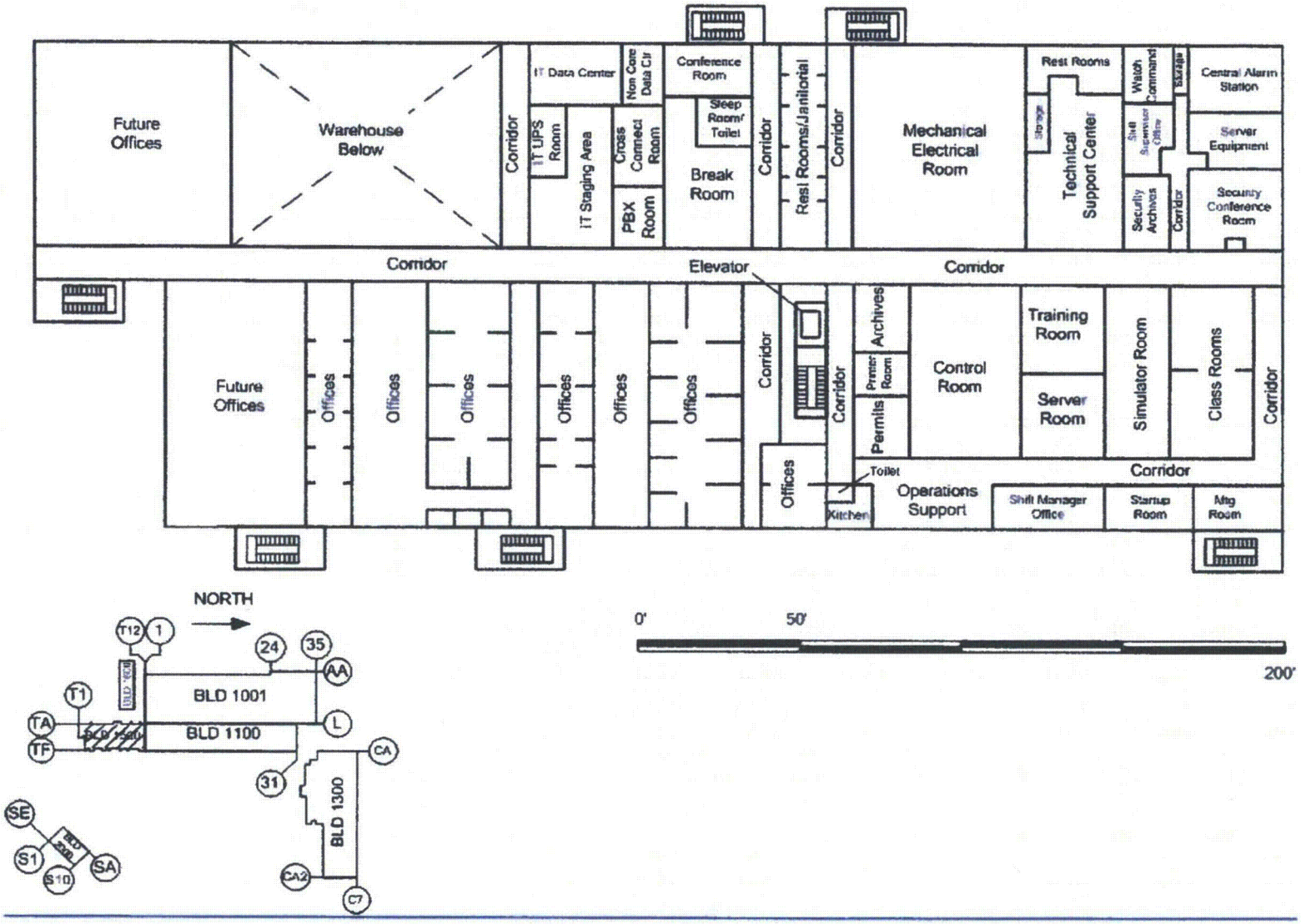

Figure 3.3-7 Technical Services Building Second Floor

LBDCR-10-0009

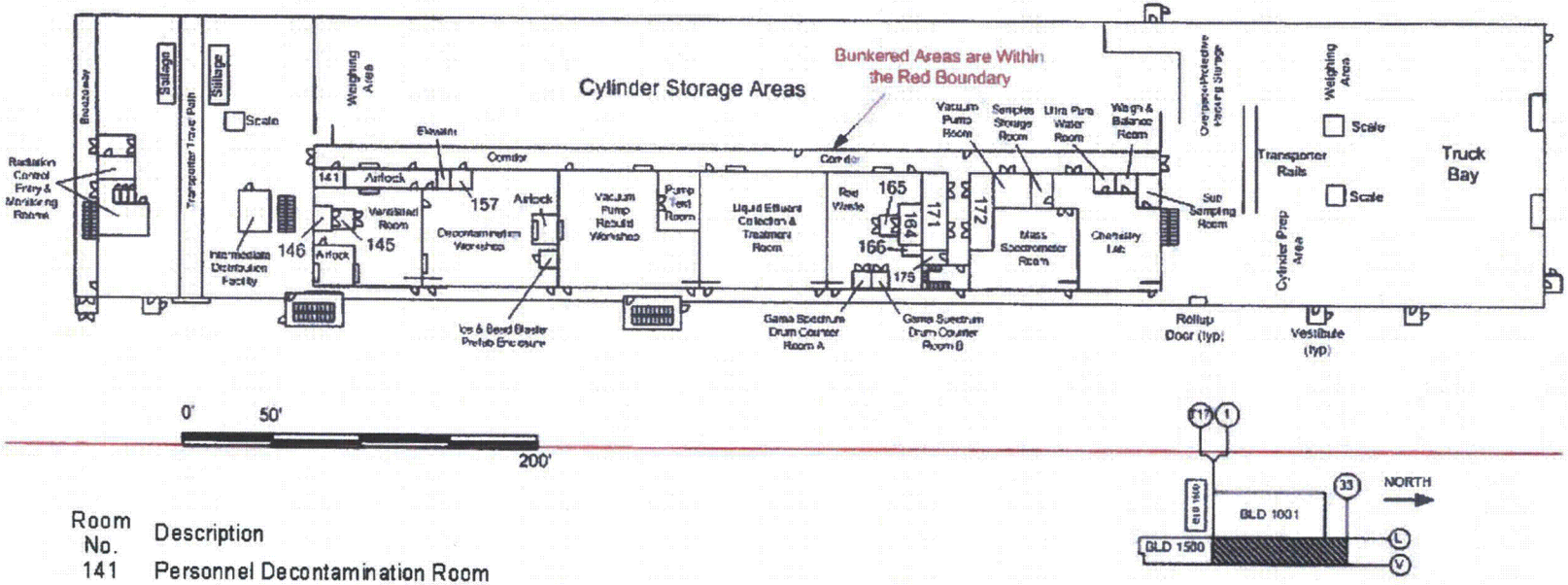

Room No.	Description
141	Personnel Decontamination Room
145	Cold Trap and Filter Unit Enclosure
146	Trap Emptying and Drum Tipper Enclosure
157	Elevator Equipment Room
164	Drum Repackaging Enclosure
165	Whole Body Monitor Enclosure
166	Radioactive Source Storage Enclosure
171	Electrical Equipment Room A
172	Electrical Equipment Room B
175	Electrical and Mechanical Chase

LBDCR-10-0009

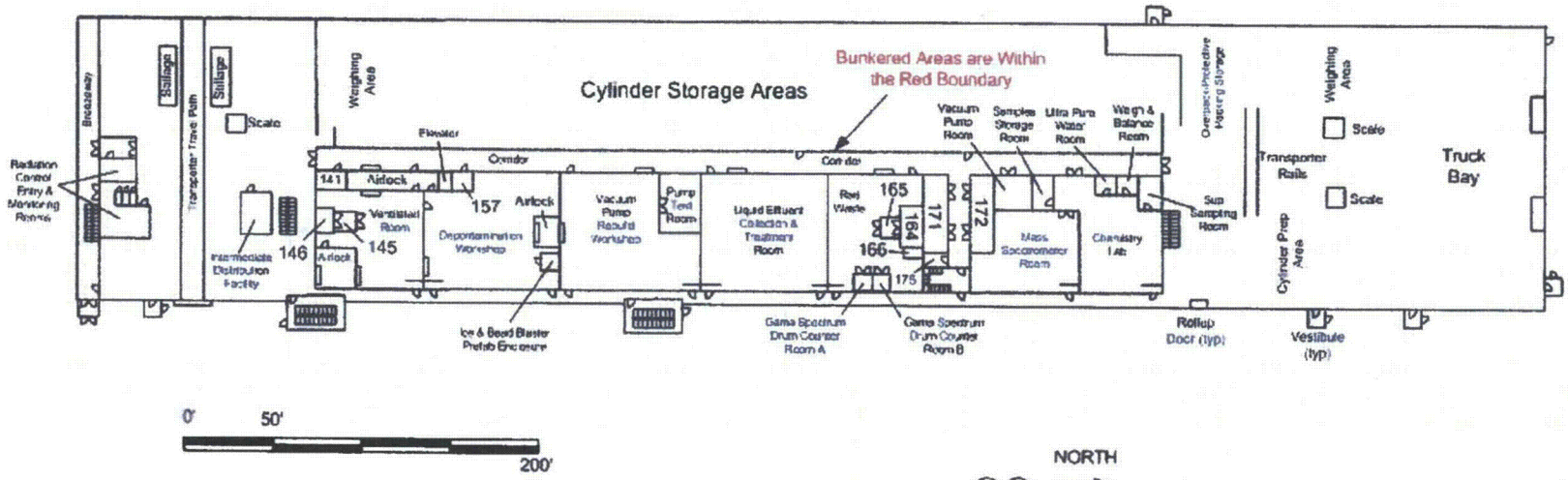

Room No.	Description
141	Personnel Decontamination Room
145	Cold Trap and Filter Unit Enclosure
146	Trap Emptying and Drum Tipper Enclosure
157	Elevator Equipment Room
164	Drum Repackaging Enclosure
165	Whole Body Monitor Enclosure
166	Radioactive Source Storage Enclosure
171	Electrical Equipment Room A
172	Electrical Equipment Room B
175	Electrical and Mechanical Chase

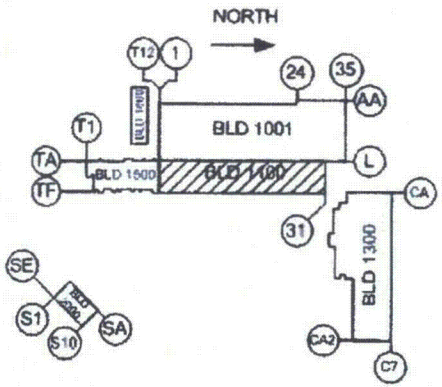

LBDCR-10-0009

Figure 3.3-8 Cylinder Receipt and Dispatch Building First Floor

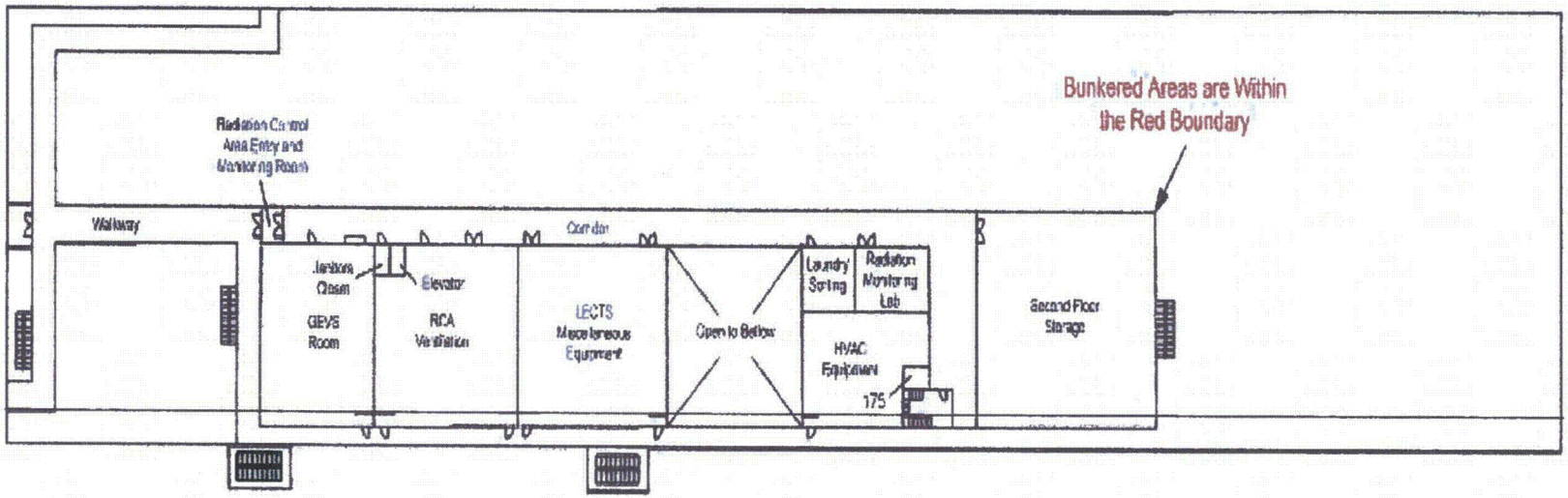

LBDCR-10-0009

CRDB Second Floor

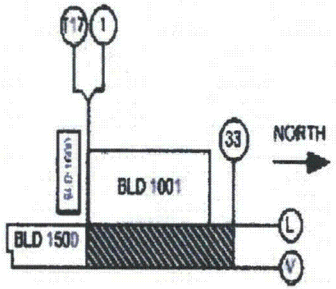

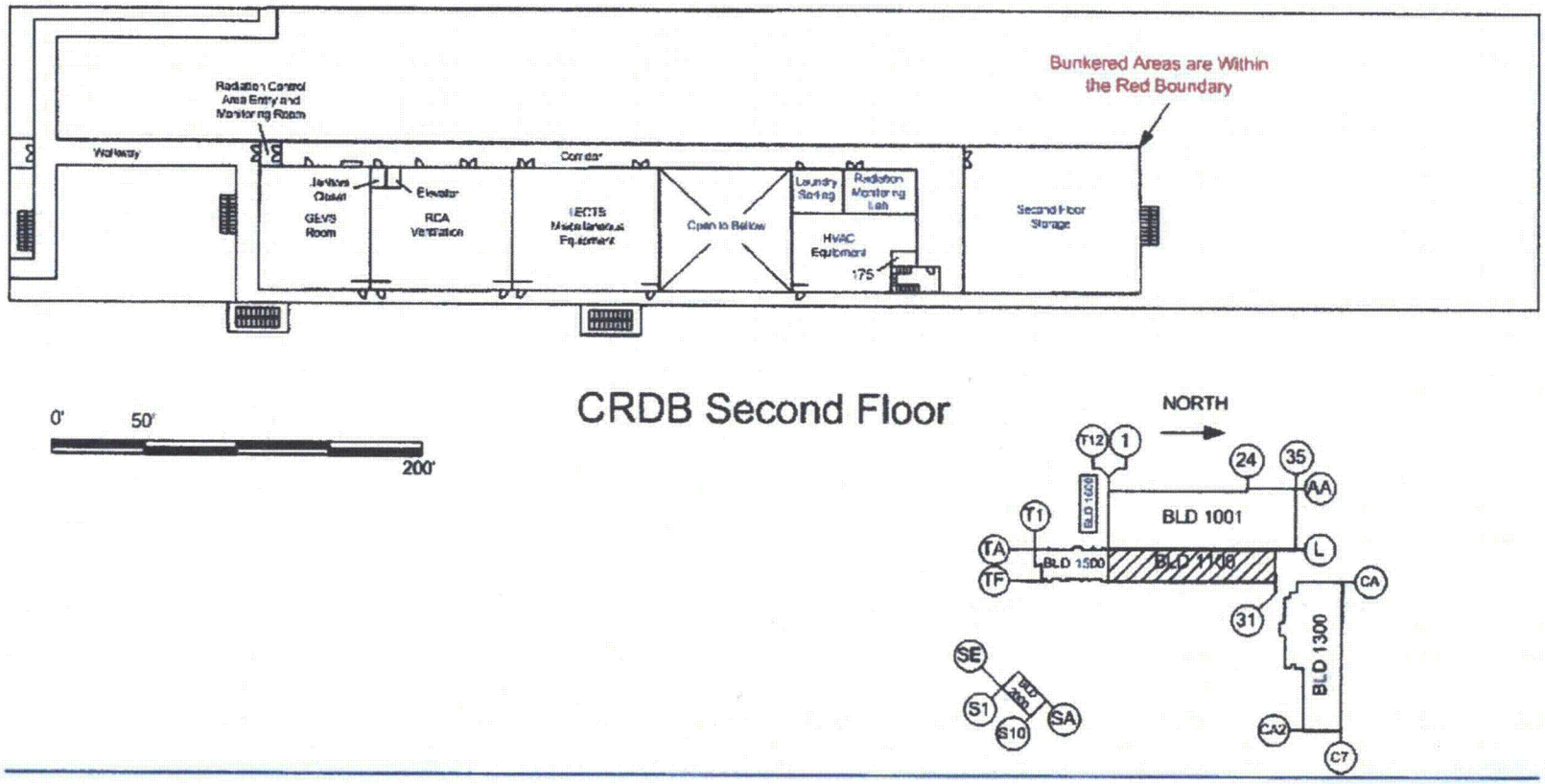

LBDCR-10-0009

Figure 3.3-9 Cylinder Receipt and Dispatch Building Second Floor

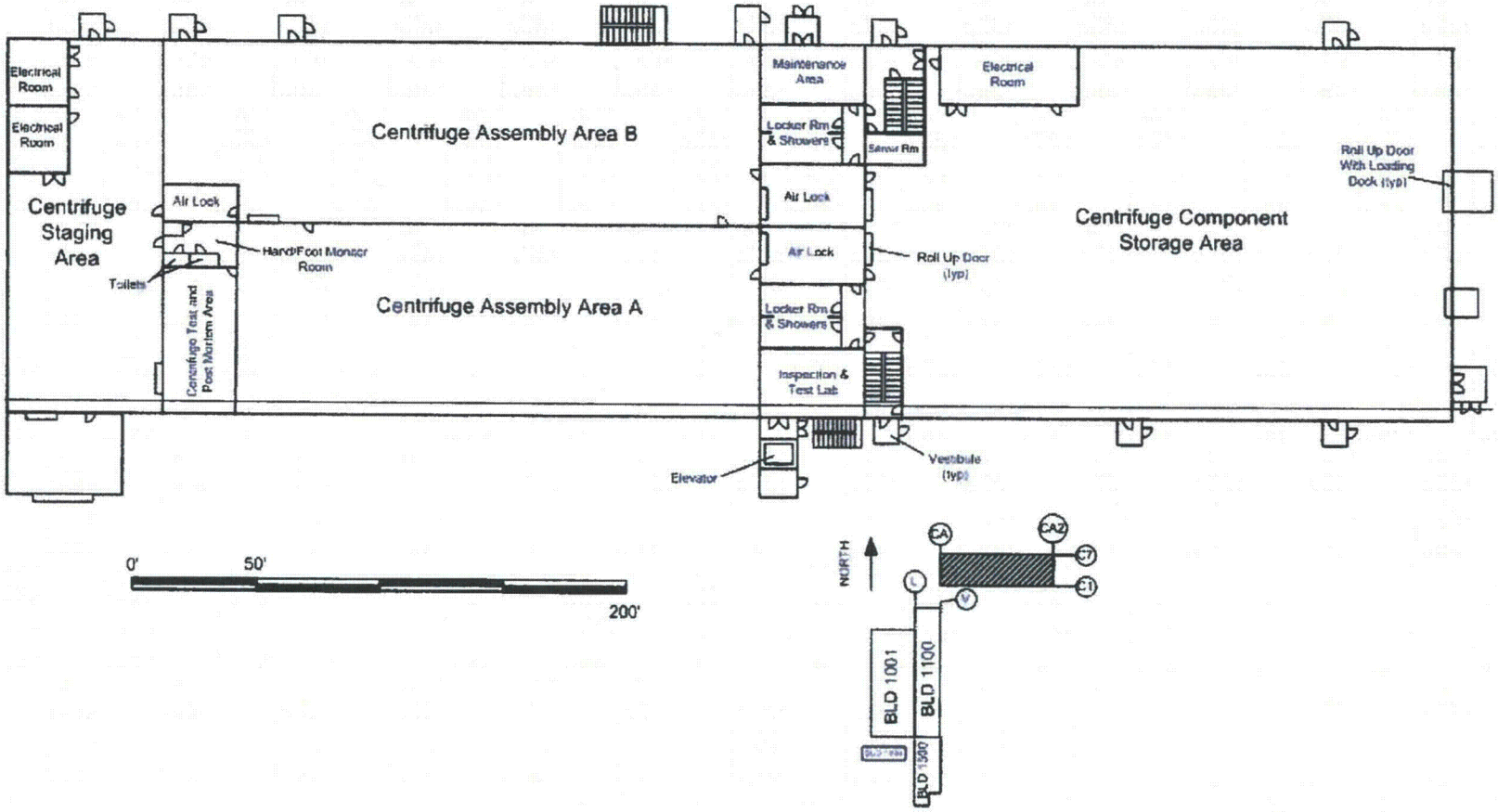

LBDCR-10-0009

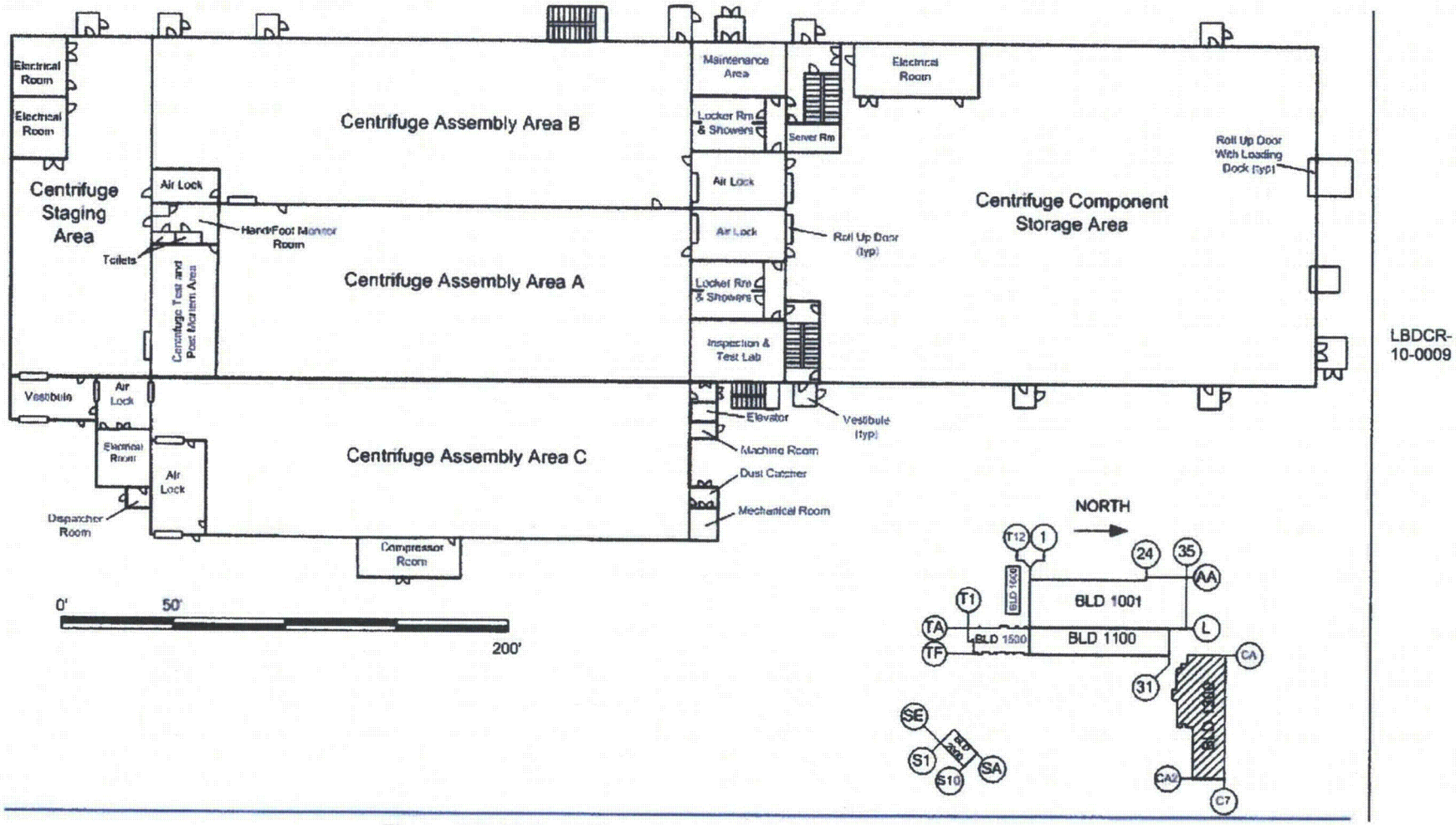

LBDCR-10-0009

Figure 3.3-10 Centrifuge Assembly Building First Floor

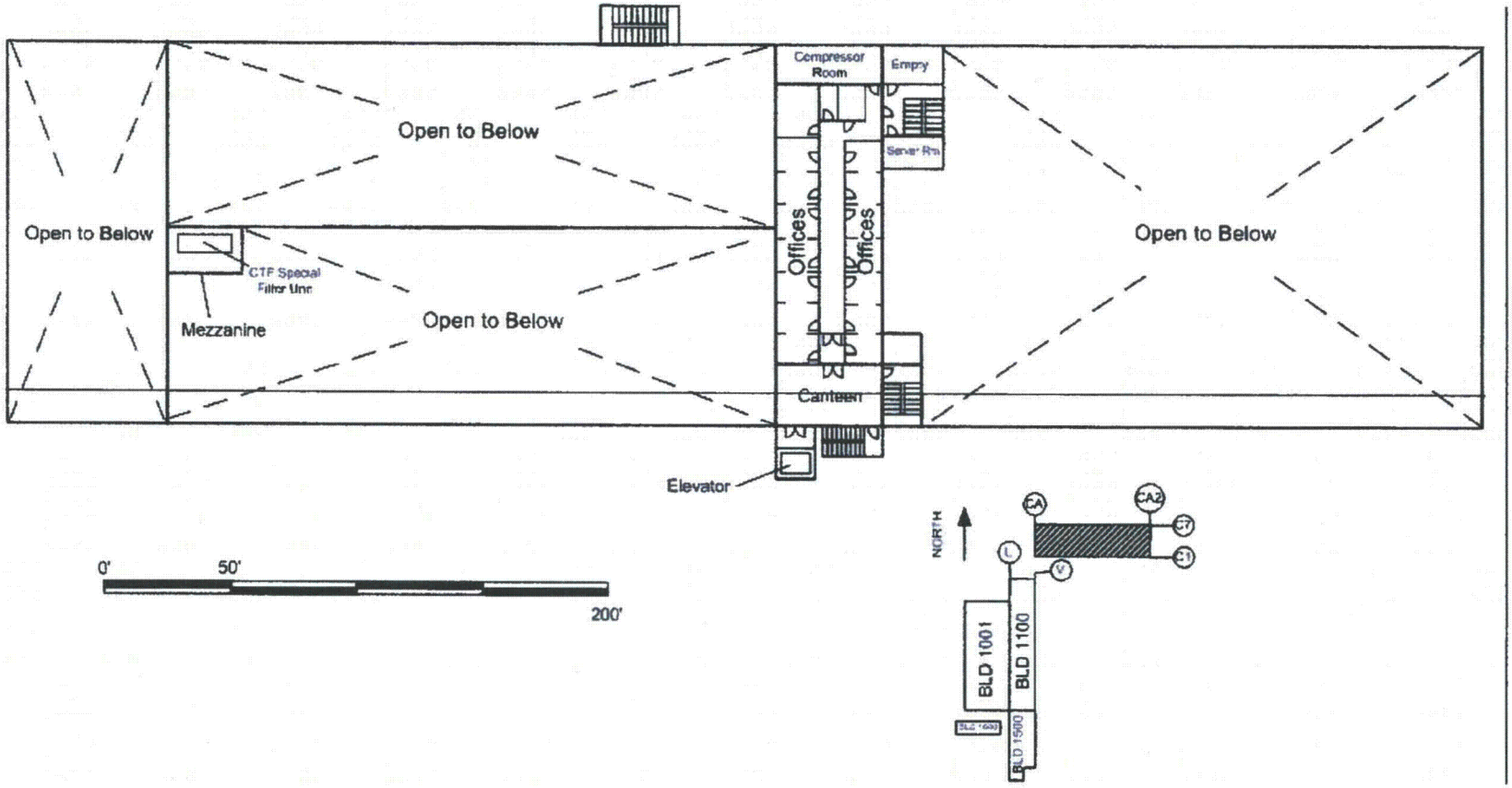

LBDCR-10-0009

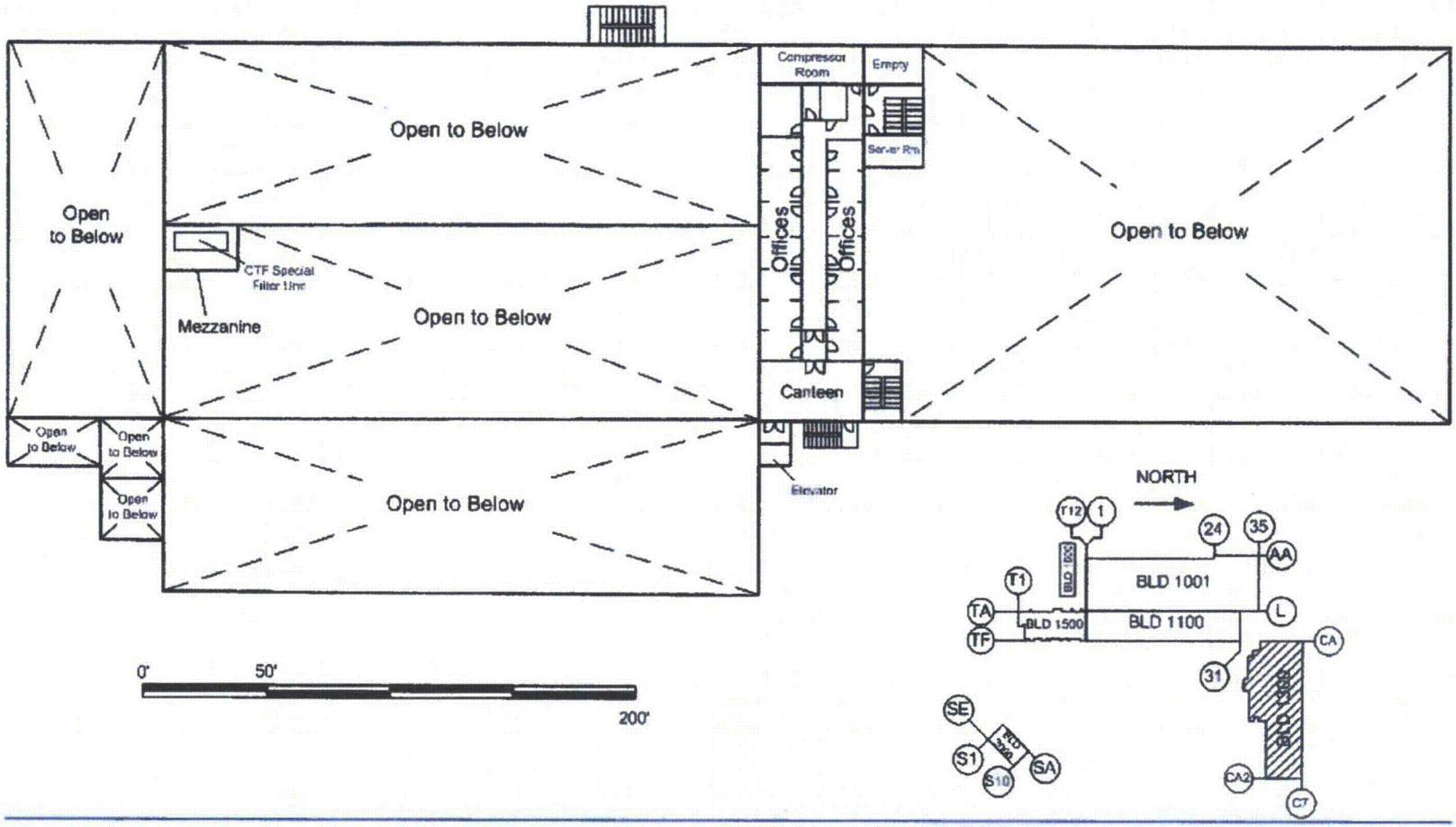

LBDCR-10-0009

Figure 3.3-11 Centrifuge Assembly Building Second Floor

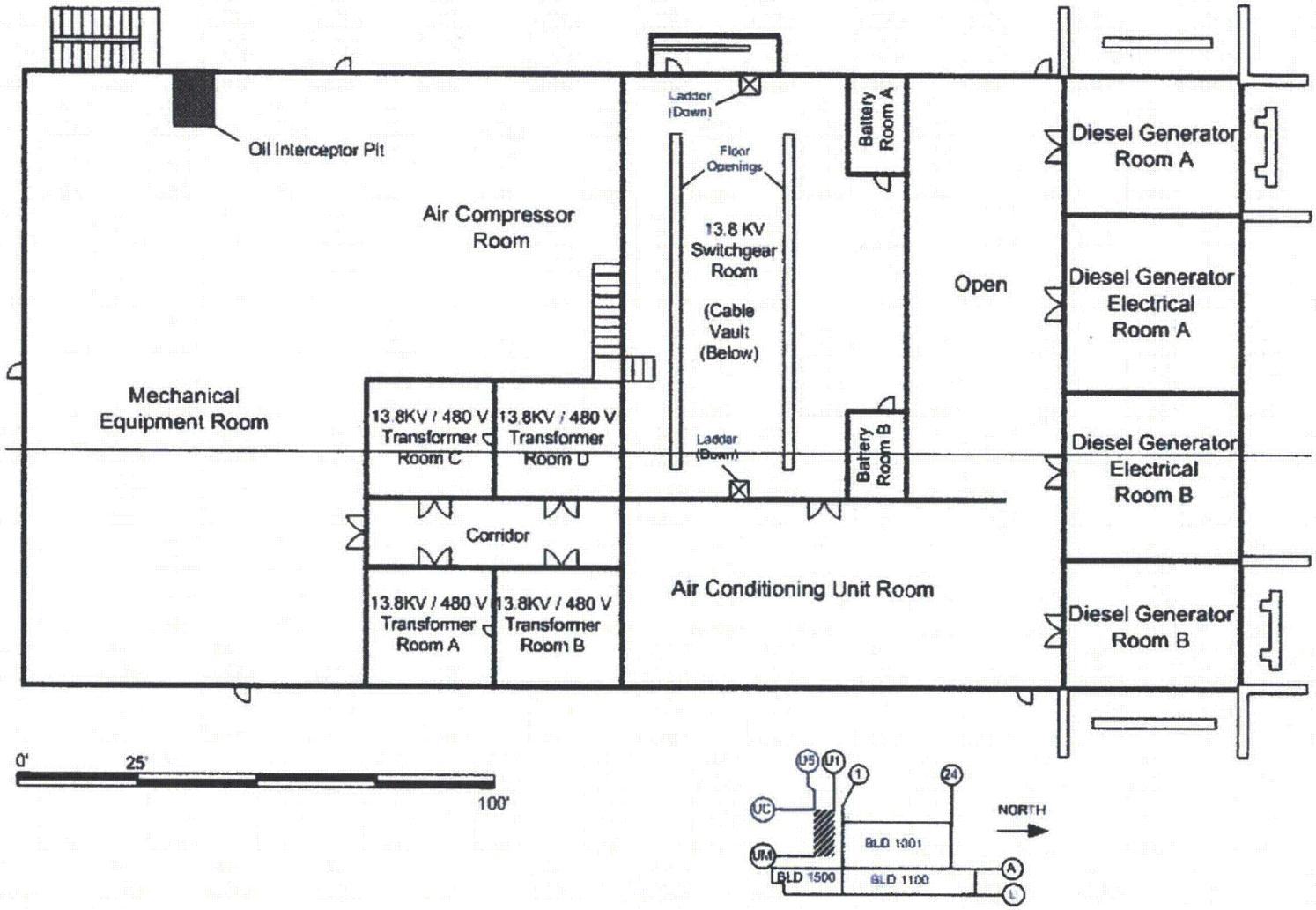

LBDCR-10-0004

LBDCR-10-0009

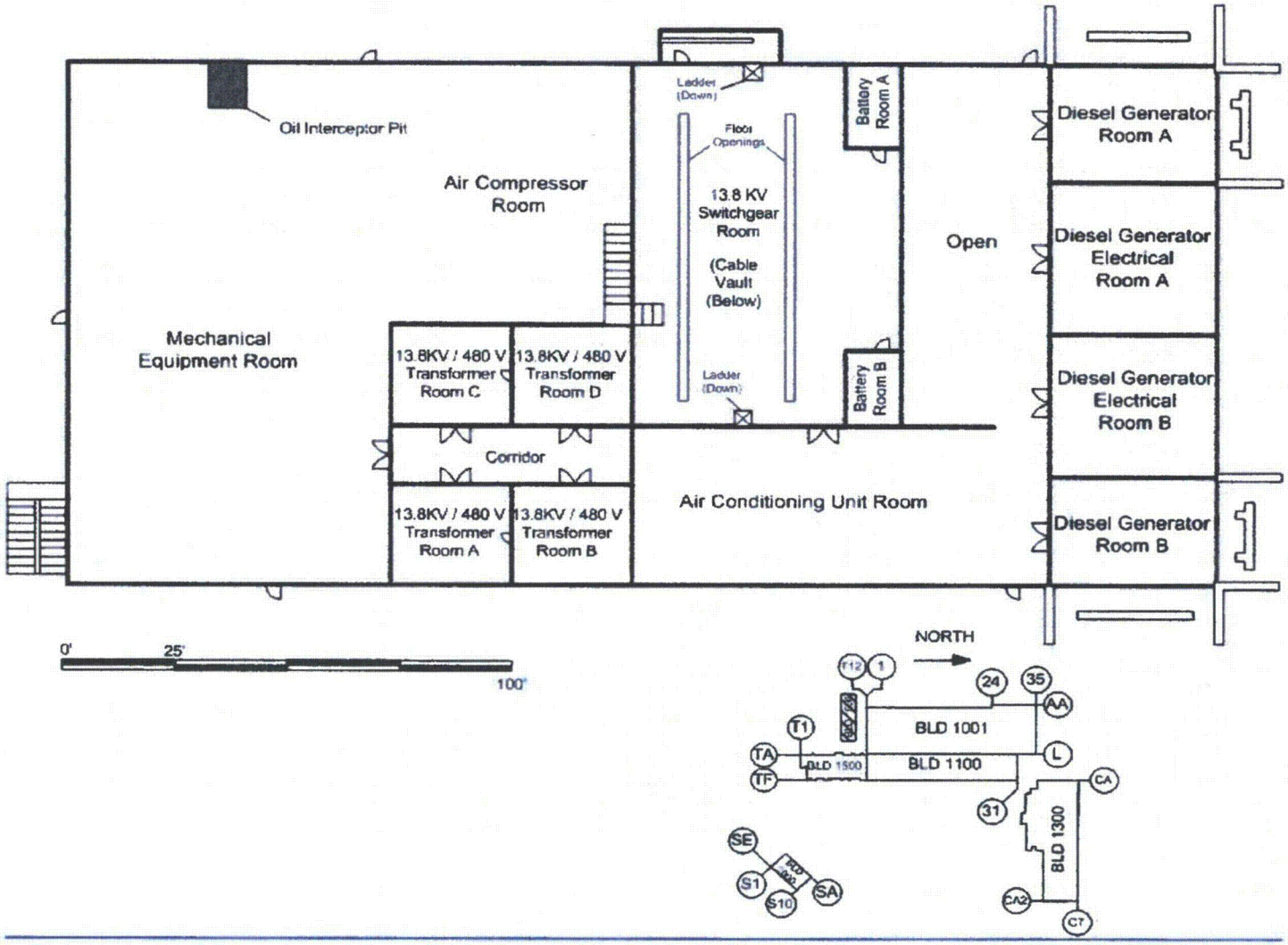

LBDCR-10-0004

LBDCR-10-0009

Figure 3.3-12 Central Utilities Building First Floor

3.4 PROCESS DESCRIPTIONS

This section provides a description of the enrichment processes and systems analyzed as part of the Integrated Safety Analysis. A brief overview of the entire enrichment process is provided followed by a detailed description of each process system. This section provides design, operational, and process flow information to support the hazard and accident analysis, as well as to assist in understanding the overall design and function of the National Enrichment Facility (NEF).

UF_6 enrichment systems are comprised of four major systems:

- UF_6 Feed System
- Cascade System
- Product Take-off System
- Tails Take-off System.

LBDCR-10-0037

~~The above systems are used only for the enrichment process.~~ In addition to the four primary systems listed above, ~~there are several~~the following major support systems are discussed in this section:

LBDCR-10-0012

- Product Blending System
- Product Liquid Sampling System
- Contingency Dump System.

Finally, the following processes and systems are discussed based on their supporting relationship to the enrichment process and the handling of UF_6:

- GEVS
- Centrifuge Test Facility and Centrifuge Post Mortem Facility
- Material Handling.

Each of the sections that discuss the 10 processes identified above are generally organized to present the following information:

- Functional Description
- Major Components
- Design Description
- Interfaces
- Design and Safety Features
- Operating Limits
- Instrumentation

Items relied on for safety associated with the processes and systems identified above are listed in Section 3.8, Items Relied On For Safety (IROFS).

The calculated values of k_{eff} provided in the following sections were obtained using the criticality code MONK8A (SA, 2001), in conjunction with the JEF2.2 nuclear data library. All values of k_{eff} given in the following sections are equal to $k_{calc} + 3\ \sigma_{calc}$ with a safety limit of 0.95. LBDCR-10-0012

In the following sections, the design process parameter values are specified with a datum of standard atmospheric pressure at sea level. These values will be finalized to reflect the site-specific NEF elevation during the design phase and the ISA Summary will be revised accordingly.

3.4.1 Overview Of Gas Centrifuge Enrichment Process

~~(See 4.2.1)~~ The function of the NEF is to enrich (increase) the amount of ^{235}U isotope in uranium hexafluoride (UF_6) from naturally occurring feed at 0.711 $^{w}/_{o}$ up to a maximum of 5.0 $^{w}/_{o}$. The enriched UF_6 is then used for manufacturing fuel for commercial electricity generating nuclear power plants. LBDCR-10-0033

An overview of the enrichment process (Ref. Figure 3.4-1, Pictorial Representation of the Enrichment Process) systems and the enrichment support systems are discussed below. Additional details on each of the enrichment process systems are provided in subsequent sections.

3.4.1.1 UF_6 Feed System

The first step in the process is the receipt of the feed cylinders and preparation to feed the UF_6 into the enrichment process.

Natural UF_6 feed is received at the NEF in Department of Transportation (DOT) 7A, Type A cylinders from a conversion plant. The cylinders are ANSI N14.1, 48Y cylinders. Pressure in the feed cylinders is below atmospheric (vacuum) and the UF_6 is in solid form.

The function of the UF_6 Feed System is to provide a continuous supply of gaseous UF_6 from the feed cylinders to the cascades.

To begin the enrichment process, a 48-in feed cylinder is placed into a Solid Feed Station. There are five Solid Feed Stations per Cascade Hall, with four supporting the current SWU capacity and the fifth to support the planned SBM expansion and operational flexibility. Normally three are online. Each Solid Feed Station consists of an insulated enclosure, heated by electric heaters, into which the cylinder is placed. The cylinder is heated to 53°C (127°F) in the Solid Feed Station. At this temperature and pressure (sub-atmospheric), the solid UF_6 sublimes into a gas. Two important safety features of the feed system are that (1) at no time does the UF_6 go into a liquid phase and (2) station design features prevent a 30B product cylinder from being connected to the feed system, thereby eliminating the potential for a criticality event based on over-enrichment of the material in a 30B product cylinder.

The feed purification system is used to remove the light gas components from the UF_6 feed material to a specified level prior to admittance to the cascades. This protects the centrifuges against high intake of light gas and enhances cascade efficiency by limiting impurities.

For each Cascade Hall, there are two feed purification Low Temperature Take-off Stations (LTTS). These stations consist of insulated enclosures that are maintained at operating temperatures by electrically operated chiller units. 48Y cylinders are placed into the LTTS and chilled . As the gaseous UF_6 enters the cylinder, desublimation into solid UF_6 occurs. In addition to the LTTS, there are two UF_6 Cold Traps which desublime UF_6, carbon traps, aluminum oxide (Al_2O_3) traps, and vacuum pumps, used to transfer residual light gas to the Pumped Extract GEVS . The carbon and aluminum oxide traps remove trace UF_6 and HF from the gas stream.

After purification, the UF_6 gas is then fed through a main header to the cascades, where the enrichment process actually occurs. Main header pressure is limited to 65 mbar (26.1 in. H_2O) to prevent the gaseous UF_6 from desubliming back to a solid at ambient temperature.

3.4.1.2 Cascade System

The function of the Cascade System is to receive gaseous UF_6 from the UF_6 Feed System and enrich the ^{235}U isotope in the UF_6 to a maximum of 5 $^{w}/_{o}$.

Multiple gas centrifuges make up arrays called cascades. The cascades separate gaseous UF_6 feed with a natural uranium isotopic concentration into two process flow streams – product and tails. The product stream is enriched in the ^{235}U isotope. The tails stream is depleted in the ^{235}U isotope.

3.4.1.3 Product Take-off System

The function of the Product Take-off System is to provide continuous withdrawal of the enriched gaseous UF_6 product from the cascades.

The product streams leaving the cascades (at each Cascade Hall) are brought together into one common manifold. The product stream is transported via a train of vacuum pumps to Product Low Temperature Take-off Stations. There are five Product LTTS per Cascade Hall. Normally two are on-line when using 30B cylinders. Each LTTS consists of an insulated enclosure that is maintained at operating temperature by electrically operated chiller units. A 30B cylinder is placed into the LTTS and cooled. The 30B cylinders contain final product to be shipped to the customer. The 30B cylinders are used internal to the plant for blending purposes. As the enriched gaseous UF_6 enters the cylinder, desublimation into solid UF_6 occurs. An important safety feature of the Product Take-Off Stations is the design features that prevent using a 48-inch cylinder to collect product material. This eliminates the potential for a criticality event based on over-enrichment if the 48-inch cylinder with enriched product material was inadvertently used as a feed cylinder.

The entire system operates at sub-atmospheric pressure.

The Product Take-off System also contains a system to purge and dispose of light gas impurities from the enrichment process. This system consists of product vent UF_6 Cold Traps into which UF_6 desublimes while leaving the light gas in a gaseous state. The UF_6 Cold Trap is followed by product vent vacuum pump/chemical trap sets, each consisting of an activated carbon trap, ~~an~~ two aluminum oxide traps, and a vacuum pump with an aluminum oxide oil trap on the pump suction and a mechanical oil trap (exhaust filter) on the pump discharge. The carbon trap removes small traces of UF_6 and the aluminum oxide trap removes any HF from the gas flow. The oil traps prevent oil migration both upstream and into the Pumped Extract GEVS. LBDCR-09-0110 LBDCR-09-0110

3.4.2 (See SAR § 12.1.2.1 ~~4.2.2~~)UF_6 Feed System

LBDCR-10-0033

3.4.2.1 Functional Description

The principal function of the UF_6 Feed System is to provide a continuous supply of gaseous uranium hexafluoride (UF_6) from the feed cylinders to the cascades (Ref. Figure 3.3-3, UF_6 Handling Area, Equipment Locations and 3.4-2, Process Flow Diagram, UF_6 Feed System). Sublimation from the solid phase, at pressures significantly below atmospheric, is the process used in the UF_6 Feed System. Purification of the as-received UF_6 feed material is accomplished in the Feed Purification Subsystem, where light gas components, primarily air and HF, are removed. This protects the centrifuges against excessive intake of light gas, which improves cascade production efficiency. Secondary functions of the Feed Purification Subsystem are to vent the light gas from the system during cylinder changeouts and to remove the final quantity of UF_6 (the heel) from the feed cylinder. The system produces intermittent gaseous effluent from UF_6 purification operations. Additional small intermittent quantities of gaseous effluent are produced from purging and evacuating the flexible piping used to connect the feed and feed purification cylinders. These effluents are treated by the Feed Purification UF_6 Cold Traps and Vacuum Pump/Chemical Trap Sets to remove UF_6 and HF before being routed to the Pumped ExtractGEVS for further treatment. Solid wastes are produced from periodic change-out of chemical and oil traps. There are no liquid effluents directly produced in this system. Vacuum pumps are taken out of service for maintenance and the pump oil is reprocessed in the CRDB and reused.

The UF_6 Feed Systems are located in the UF_6 Handling Area of each Separations Building Module. The UF_6 Feed Systems are operated from the Control Room, with the exception of maintenance and preparation activities, which are controlled locally.

3.4.2.2 Major Components

The major UF6 Feed System components are described below.

A. Solid Feed Station.

A Solid Feed Station (Ref. Figure 3.4-3, Solid Feed Station Equipment Drawing) consists of an insulated box with a non-flammable core, complete with rails for the electric carriage of the cylinder transporter. Each Solid Feed Station uses an electric air heater and circulation fan, to heat solid UF_6 causing it to sublime within the cylinder. A Solid Feed Station weighing device (a frame with four load cells) provides continuous on-line weighing of UF_6 in the feed cylinder.

The front of the Solid Feed Station is made up of a single door. Connection of the cylinder in a Solid Feed Station is made at the front (door) end. The Solid Feed Station does not have a rear opening. Rubber seals are used on the openings in the Solid Feed Station to minimize leaks for energy conservation.

B. Solid Feed Station Valve Hotbox.

Valves in a Solid Feed Station Valve Hotbox connect the feed cylinder to the Main Feed Header, the Feed Purification Subsystem, or the Nitrogen System. Manual and automatic isolation valves, a pressure control valve, and pressure transducers are contained in the electrically heated hotboxes to maintain them at a stable temperature. The UF_6 piping between the Solid Feed Station and hotbox is heat traced.

C. Main Feed Header.

The Main Feed Header connects the Solid Feed Station Valve Hotboxes to each of the cascades in a Cascade Hall. Pressure is controlled in the header so that heat tracing is not required.

D. Feed Purification Subsystem.

A Feed Purification Subsystem is provided for each Cascade Hall and consists of two Low Temperature Take-off Stations (LTTS), each with associated valve hotbox, UF_6 cold trap and heater chiller unit, and a vacuum pump/chemical trap set. One Feed Purification Subsystem is provided for each Cascade Hall, but each major component in the system is duplicated. The major Feed Purification Subsystem components are described below:

1. Low Temperature Take-off Station (LTTS) (Ref. Figure 3.4-4, Low Temperature Take-off Station Equipment Drawing). An LTTS consists of a composite panel box construction complete with rails for the electric carriage of the cylinder transporter. The LTTS panels have a non-flammable insulated core and are vapor sealed to prevent ice build-up within the insulation. Each LTTS incorporates an air chiller unit, with controls, to remove thermal energy from the UF_6 gas to cause it to desublime in the cylinder. The chiller unit uses a heater during the defrost cycle, to prevent ice buildup on the coils. A hot air blower directed at the cylinder valve prevents UF_6 from desubliming and blocking the cylinder inlet. An LTTS weighing device (a frame with four load cells) provides continuous on-line weighing of UF_6 in the purification cylinder. LBDCR-09-0138

   The front of the LTTS is made up of a single door and the back is furnished with an opening to facilitate connection of the cylinder to the UF_6 piping. A rubber bellows is fitted around the LTTS back opening, which envelops the cylinder valve, to prevent cooled air from leaking out of the LTTS. Similar seals on the other openings in the LTTS minimize leaks for energy conservation. The LTTS access openings are provided with heat tracing to prevent ice build-up. LBDCR-09-0138

2. Low Temperature Take-off Station Valve Hotbox. Valves in a LTTS valve hotbox connect the LTTS to the Solid Feed Station Valve Hotboxes, the UF_6 cold traps, or the Nitrogen System. Manual and automatic isolation valves and a pressure transducer are contained in the electrically heated hotboxes to maintain them at a stable temperature. The UF_6 piping between the Solid Feed Station Valve Hotboxes and the LTTS Valve Hotboxes is heat traced. LBDCR-09-0138

3. UF_6 Cold Trap (Ref. Figure 3.4-5, UF_6 Cold Trap Equipment Drawing). Each UF_6 cold trap consists of an insulated horizontal tube with internal baffles. The UF_6 cold trap has a dedicated heater/chiller unit operating at a cooling set point and a heating set point. Each heater/chiller unit contains a heat exchange media [approximately 70 L (19 gal) of silicon oil]which circulates around each cold trap. The low temperature removes the thermal energy from the UF_6 gas, causing it to desublime on the internal walls of the trap, while leaving the light gas in the gaseous phase. The high temperature results in sublimation of the UF_6 contents of the UF_6 cold trap for transfer back to a feed purification cylinder. Each end of the UF_6 cold trap is heat traced to prevent the UF_6 from solidifying and blocking the UF_6 cold trap entrance or exit. The UF_6 cold trap has a weighing device to provide continuous on-line weighing of the UF_6 accumulated. LBDCR-09-0138

   An automatic control valve located after each UF_6 cold trap restricts the flow of gases through the UF_6 cold traps. This ensures an adequate residence time for the gases in the UF_6 cold trap to allow all of the UF_6 to desublime. LBDCR-09-0138

4. Vacuum Pump/Chemical Trap Set (Figure 3.4-6, Chemical Trap Equipment Drawing). The UF_6 cold traps are followed by vacuum pump/chemical trap sets. Each set has an activated carbon trap, ~~an~~two aluminum oxide traps, an insulated vacuum pump with nitrogen purge, and an aluminum oxide oil trap on the pump suction and a mechanical oil trap (exhaust filter) on the pump discharge~~either side of the vacuum pump~~. The vacuum pump exhausts into the Pumped Extract GEVS. The activated carbon trap removes small traces of UF_6. The aluminum oxide trap removes HF. The o~~O~~il traps ~~are installed before and after the vacuum pump to~~ prevent oil migration both upstream and into the Pumped Extract GEVS. LBDCR-09-0138 LBDCR-09-0110 LBDCR-09-0110

E. Mobile Feed Sampling Rig

The Mobile Feed Sampling Rig is used to take UF_6 process samples from feed cylinders prior to UF_6 material being introduced into the cascades. Once the required samples are taken the rig will be evacuated through a chemical trap and pump for removal of any remaining UF_6 and HF and exhausted to the Pumped Extract GEVS. The Mobile Feed Sampling Rig is comprised of automatic and manual valves, nitrogen purging, and an evacuation pump/trap set, where the trap consists of a mixed-bed containing both activated carbon and aluminum oxide. This pump/trap set also contains a flow restriction device (IROFSC21) on the suction side of the pump. LBDCR-09-0138

3.4.2.3 Design Description

The design bases and specifications are given in Table 3.4-1, UF_6 Feed System Design Basis. Applicable Codes and Standards are given in Table 3.4-2, UF_6 Feed System Codes and Standards.

The entire UF_6 Feed System operates at sub-atmospheric pressure. In the event of a confinement barrier failure (e.g., pipe leak), releases of uranyl fluoride (UO_2F_2) and HF are greatly minimized because air will migrate into the system rather than UF_6 escaping from the system. This important safety feature greatly limits the likelihood of exposures.

There are ~~six~~five Solid Feed Stations, each with an associated valve hot box, connected in parallel to the main feed header in each UF_6 Feed System. At any time three Solid Feed Stations can be on-line to handle the maximum UF_6 feed flow to one Cascade Hall. ~~Two Solid Feed Stations are in either standby mode or preparation mode.~~ The ~~six~~remaining Solid Feed Stations ~~is a spare and~~ can be in either standby, off-line, preparation, or maintenance mode. LBDCR-10-0027 LBDCR-10-0027

Each UF_6 Feed System has a dedicated Feed Purification Subsystem, consisting of two LTTSs, two UF_6 Cold Traps, and two Vacuum Pump/Chemical Trap Sets connected in parallel. One of the LTTSs, UF_6 Cold Traps, and Vacuum Pump/Chemical Trap Sets is available for use, while the second is a spare and can be in, off-line, preparation (cylinder being installed or removed), or maintenance mode.

Prior to feeding UF_6 to the cascades, the contents of each cylinder are purified and verified as natural UF_6. This verification is accomplished by sampling and assay analysis of a feed cylinder contents for uranic enrichment. Any light gases, primarily air and HF, and a specified quantity of UF_6 are transferred to a purification cylinder, to ensure that impurities are removed from the feed cylinder. Likewise, the purification cylinder is relieved through the UF_6 Cold Trap and Vacuum Pump/Chemical Trap Set to the Pumped Extract GEVS. Finally a sample of the gaseous UF_6 is desublimed into a sample bottle for analysis.

The Solid Feed Station provides controlled heat to the feed cylinder to sublime the UF_6 directly from solid phase to gaseous phase at subatmospheric pressures. Pressure is controlled throughout the system to maintain the sub-atmospheric pressures and to provide the required flow rate. UF_6 piping and valve stations where UF_6 desublimation could occur are heated. The building HVAC system is designed to maintain a minimum temperature of 18°C (64.4°F), therefore heat tracing of the main feed header, which is controlled at a pressure less than 65 mbar (26.1 in. H_2O), is not required.

All components and piping in the UF_6 Feed System operate at subatmospheric pressure. Release of UF_6 and/or HF is unlikely because leakage, if it were to occur, would be into the system.

The materials of construction and fabrication specifications for the equipment and piping used in the UF_6 Feed System are compatible with UF_6 at the operating conditions and have been proven by over 30 years of use in existing Urenco European enrichment plants.

3.4.2.4 Interfaces

The UF_6 Feed System interfaces with the following systems and utilities:

A. Cascade System

B. Pumped Extract GEVS

C. Nitrogen System

D. Compressed Air System

In addition to the closed loop control system previously described, there are two independent and diverse temperature protection instruments. These provide extra safety margin to protect against increases in temperature that may occur if the defrost heater control does not operate properly. The first instrument is a fail-safe hardwired RTD and the second instrument is a fail-safe thermocouple. Both instruments measure the temperature of the air inside the LTTS. Both instruments will trip the defrost heater and fan power supply in the event the air temperature rises above their set point. If heater trip occurs from these two instruments, the LTTS is automatically taken off-line and put into a standby mode.Both instruments are set to trip at a set point which is well below the calculated set point required to ensure cylinder integrity.

To prevent desublimation in the cylinder valve, hot air is blown over the valve with a hot air blower. A temperature sensor on the valve controls the temperature to 60°C (140°F).

E. Feed Purification UF_6 Cold Traps

Dual pressure instruments monitor the UF_6 cold trap inlet pressure. The instruments have different ranges and each is used during different purification operations.

UF_6 cold trap outlet pressure is monitored during the purification operation. A high alarm warns of high pressure in the UF_6 cold trap. A second high alarm trips the UF_6 cold trap off-line, switching the heater/chiller unit off and closing the inlet and outlet valves. A low alarmwarns of low pressure and indicates the UF_6 cold trap is empty when collected UF_6 is being sublimed for transfer back to a purification cylinder. A second low alarmcloses the UF_6 cold trap outlet valve to prevent UF_6 flow to the vacuum pump.

A pressure sensor and control valve between each UF_6 cold trap and its vacuum pump/chemical trap set restricts the flow of light gases through the UF_6 cold trap to ensure all UF_6 desublimes and does not reach the carbon trap. The line pressure into the vacuum pump/chemical trap set is controlled.

A weighing system monitors the contents of the UF_6 cold trap. An alarm at 40 kg (88.2 lb) warns that the UF_6 cold trap is approaching capacity. A second alarm closes the UF_6 cold trap inlet and outlet valves.

The temperature of the UF_6 cold trap is maintained at –60°C (-76°F) during cooling and at 20°C (68°F) for heating during sublimation to empty the UF_6 cold trap of collected UF_6 (gas back). A low alarm warns of a chiller unit fault. A high alarm closes the UF_6 cold trap outlet valve and a second high alarm warns of high temperature during gas back. If the temperature continues to rise, the UF_6 cold trap trips off-line to avoid desublimation of UF_6 in the header.

F. Feed Purification Vacuum Pump/Chemical Trap Sets

~~There are two~~A temperature instruments that prevents the carbon trap from overheating ~~and overfilling with UF_6. One~~The sensor monitors the carbon trap temperature. If the high temperature trip setpoint is reached, the Feed Purification UF_6 cold trap outlet valves will close blocking flow to the vacuum pump/checmical trap set. A signal is also sent to the PCS to warn the operator. ~~This sensor will close the Feed Purification UF_6 cold trap outlet valves when carbon trap on high temperature. This blocks flow to the vacuum pump/chemical trap set. The carbon trap also has a weigh system. In addition to local weight display, this system will shut down the vacuum pump when the high weight set point is reached.~~ LBDCR-09-0110

The second (downstream) activated aluminum oxide (Al_2O_3) trap on the vacuum pump/chemical trap set is also equipped with a weigh system to monitor accumulation of UF_6 in the carbon trap. The weigh system on the aluminum oxide trap ~~only~~ displays a weight locally and provides a healthy/unhealthy status to the PCS. There is no control function on this weight indicator. The chemical traps are replaced based on the accumulated weight. LBDCR-09-0110

~~Increase in weight is used to monitor accumulation of UF_6 in the carbon trap and HF in the aluminum oxide trap. The chemical traps are replaced based on the accumulated weight.~~

3.4.2.8 Criticality Safety

The feed material used in the feed system is natural UF_6 with 0.711% enrichment. Criticality at this enrichment level is not credible, given the physical law. The only equipment associated with the feed system requiring a criticality evaluation is the Mobile Feed Sampling Rig, as this rig could be inadvertently connected to other parts of the process systems such as the cascade and product systems with the use of an adaptor.

The Mobile Feed Sampling Rig is used to take UF_6 process samples through an inlet hose connected to the feed station hotbox system. Once the required sample are drawn, the rig will be evacuated through a vacuum pump and chemical trap set for removal of any remaining UF_6 and HF. The pump/trap set consists of a mixed-bed chemical trap, a rotary vane vacuum pump, an oil adsorber and an exhaust filter, and is connected to the plant GEVS for venting the exhaust of UF_6 and HF. LBDCR-10-0012

The items on the Mobile Feed Sampling Rig are safe by design individually. The Mobile Feed Sampling Rig as a whole is a safe-by-design by physical arrangement as demonstrated in a nuclear criticality safety evaluation through comparison to a bounding calculation performed for the product vent vacuum pump/trap set described in Section 3.4.4.8.3.

3.4.3 (*See SAR § 12.1.2.2~~4.2.3~~*) Cascade System LBDCR-10-0033

3.4.3.1 Functional Description

The function of the Cascade System is to receive gaseous UF_6, with a natural uranium isotopic concentration, from the UF_6 Feed System and separate it into two streams, increasing (enriching) the ^{235}U isotope content in one("product") and decreasing (depleting) the ^{235}U isotope content in the other ("tails") (Ref. Figure 3.4-7, The Enrichment Process, and Figure 3.4-8, Cascade Process Scheme Equipment Drawing). These UF_6 streams flow from arrays of gas centrifuges, called cascades, through headers to the Product Take-off System and Tails Take-off System.

F. Mobile Cascade Evacuation Rigs~~ and Sampling Rig~~ LBDCR-09-0110

Two Mobile Evacuation Rigs are used to sustain a low pressure in the cascade prior to and during centrifuge run-up or run-down. ~~A Mobile Sample Rig is provided to periodically collect UF_6 samples from a cascade.~~ The rigs connect to a cascade at the cascade valve station. Each~~A~~ rig consists of ~~a liquid nitrogen dewar,~~ a roots vacuum pump, an activated carbon trap, and a rotary vane vacuum pump ~~preceded by~~with an aluminum oxide oil trap ~~and~~on the pump suction and a mechanical oil trap (exhaust filter) on the pump discharge~~ followed by an oil trap~~. The sample rig also has~~, in addition,~~ product and tails sample bottles. Rig exhausts are connected to the Pumped Extract GEVS. The activated carbon trap removed small traces of UF_6. The aluminum oxide trap removes HF. The oil traps prevent oil migration both upstream and into the Pumped Extract GEVS.

G. Mobile Cascade Sampling Rig

A Mobile Sampling Rig is provided to periodically collect UF_6 samples from a cascade. The rig connects to a cascade at the cascade valve station. The Mobile Cascade Sample Rig consists of a liquid nitrogen dewar, a roots vacuum pump, an activated carbon trap, a rotary vane vacuum pump with an aluminum oxide oil trap on the pump suction and a mechanical oil trap (exhaust filter) on the pump discharge, and product and tails sample bottles. The rig exhausts to the Pumped Extract GEVS. The activated carbon trap removes small traces of UF_6. The aluminum oxide trap removes HF. The oil traps prevent oil migration both upstream and into the Pumped Extract GEVS. LBDCR-09-0110

3.4.3.3 Design Description

Arrays of gas centrifuges, called cascades, separate gaseous UF_6 feed, with a natural uranium isotopic concentration, into a product stream enriched in the ^{235}U isotope and a tails stream depleted in the ^{235}U isotope.

Should the UF_6 in a cascade need to be rapidly removed to protect the equipment from a process upset or failure, it is automatically accomplished via the Tails Take-off System. Should this system be unavailable at the time, a Contingency Dump System functions as a backup. A centrifuge monitoring system detects rotor failures, i.e., "crashes," and signals the Control Room.

Each centrifuge has an outer casing which functions as a vacuum chamber to reduce friction on the centrifuge rotor, and acts as a barrier for flying parts should a centrifuge fail.

Mobile evacuation rigs are used to evacuate the cascade prior to startup, for maintenance, and shutdown purposes. A mobile cascade sample rig is provided to periodically collect UF_6 samples from a cascade. These rigs are connected at the cascade valve station.

3.4.3.8 Criticality Safety

3.4.3.8.1 Centrifuges and Cascades

Criticality safety of TC-12 centrifuges was initially assessed assuming 6 $^{w}/_{o}$ ^{235}U enrichment without flooding. The only potential for a criticality incident in a centrifuge cascade is by gross uranium accumulation in failed centrifuges. To achieve criticality in a cascade would require an array of failed centrifuges to be completely filled with uranic breakdown (as $UO_2F_2 \cdot 3.5H2O$). The extreme conditions required to obtain the necessary uranic accumulation for criticality by this mechanism could never credibly occur in practice. Furthermore, it is highly unlikely that: (1) the centrifuges in such an array would fail simultaneously, (2) the failures would lead to inleakage of moist air into the failed centrifuges, (3) all the failed centrifuges would fill up with UF_6 breakdown products, and (4) would have an Hydrogen/Uranium (H/U) ratio that is near optimum. Therefore, the possibility of a criticality incident in a centrifuge cascade can be considered not credible.

To assess criticality safety under flooded conditions, two calculations were performed for arrays of crashed centrifuge bores partially and completely filed with uranic breakdown (as UO_2F_2 $3.5H_2O$) (ETC Calculation *Criticality Calculation for Crashed TC-12 Machines in Flood – Partially Filled Bores* and ETC Calculation *Criticality Calculation for Crashed TC-12 Machines in Flood – Completely Filled Bores)*. Various water levels up to ~~61~~60 cm were used to obtain maximum k_{eff}. For the arrays of partially filled centrifuge bores, k_{eff} was determined as a function of fill height to obtain the safe mass that meets the criticality safety criterion of k_{eff} <0.95. LBDCR-10-0012

The criticality calculations with MONK8A (SA, 2001) for flooding conclude that the case of partially filled bores is more limiting than that of completely filled bores. The safe mass for the limiting case under flooded conditions remains the same as for the dry conditions (i.e., no flooding) and represents ~~2,188~~1,015 kg of UF_6 distributed in a~~n~~ 3x4 array of ~~20~~12 bores, giving an average content of about ~~110~~ 84.6 kg of UF_6 per bore. This quantity far exceeds the UF_6 holdup in an intact machine under normal conditions or the observed amount of uranic material formed due to air in-leakage into a failed machine, which is typically on the order of grams. There is no credible mechanism for such a large accumulation of uranic material in a failed or crashed machine. Furthermore, it is highly unlikely that: (1) the centrifuges in such an array would fail concurrently and the plant would continue to operate, (2) the failures would lead to large in-leakage of moist air or significant moderator intrusion into the failed centrifuges without crashing to stop the enrichment process, (3) all the failed centrifuges would fill significantly with UF_6 breakdown products, and (4) the UO_2F_2/water mixture would have an H/U ratio at the limiting upper value of 7 in a system requiring high vacuum for normal operation. Therefore, the possibility of an inadvertent criticality in a centrifuge cascade remains not credible under flooded conditions. LBDCR-10-0012 LBDCR-10-0012

3.4.3.8.2 UF_6 Product Piping

Product piping in the Separations Building Module (SBM) varies in size ~~up to a maximum nominal diameter of 150 mm (5.9 in)~~. Only minimal surface deposition of UF_6 occurs in piping but criticality safety has been assessed for the possibility of localized blockages in pipes with the formation of uranyl fluoride due to air in-leakage. LBDCR-10-0012

MONK8A (SA, 2001) calculations ~~have been~~were performed for generic arrays of pipe intersections, filled entirely with uranyl fluoride / water mixture at optimum moderation at 6.0 $^{w}/_{o}$ enrichment. The ~~initial~~ calculation ~~assumes~~assumed no flooding, as pipe runs are typically above the flood levels especially for the cascade headers which are located above the centrifuges. Spurious reflection with 2.5 cm of water was placed either at the model boundary or at each pipe to determine the more reactive configuration. The optimum H/U ratio varied with pipe size and spurious reflection model. The minimum permitted free space (i.e., edge separation) between intersections was determined to be ~~520~~580 mm (~~20.5~~22.8 in) for 150 mm (5.9 in) nominal pipe~~, and 135~~165 mm (~~5.3~~6.5 in) for 100 mm (3.9 in) nominal pipe~~;~~, and 70 mm (2.76 in) for 65 mm (2.56 in) nominal pipe; and no spacing restriction applies to piping of nominal diameter ~~65~~40 mm (~~2.6~~1.57 in) or less. If used, product pipes larger than the 150 mm nominal pipe require an explicit nuclear criticality safety analysis. LBDCR-10-0012 LBDCR-10-0012

The above restrictions apply to individual pipe runs with up to 64 intersections or adjacent pipe runs totaling up to 64 intersections. This generic piping arrangement is based on a network of 64 piping nodes in a 4X4X4 cube, where each element of the cube has a vertical pipe and two horizontal pipes all meeting at right angles in the center (picture the meeting of the x, y, and z axis in a three-dimensional Cartesian coordinate system).

~~With flooding up to 60 cm, the re-analysis shows that the 65-mm-diameter piping is safe (i.e., k_{eff} < 0.95) under all conditions. Based on a review of the design, the 100-mm-diameter and 150-mm-diameter pipes will be well above the flood level on the first floor of the SBMs. Specifically, the pipes of concern are header pipes located in the Cascade Halls above the centrifuges (the centrifuges are on the order of 20-feet tall) or on the second floor of the Process Services Corridor. Therefore, these pipes will not be are not submerged in water under flooding conditions and the original safe condition remains valid.~~ LBDCR-10-0012

Parallel pipe runs containing product material will either fit within the ~~criticality safe~~safe-by-design value ~~for cylinder diameter~~ or be explicitly modeled and analyzed. For example, a safe condition can be demonstrated through analysis for the case where the spacing restriction might not be satisfied, but the piping might have fewer than 64 intersections.

The SBM piping conforms to the above specifications. If not, explicit calculations ~~will be~~need to be performed to satisfy the passive Safe-By-Design (SBD) requirements. The affected product piping systems ~~will~~ must be designed and demonstrated to meet the subcriticality requirements ($k_{calc} + 3\sigma_{calc} < 0.95$) for ~~the worst-case credible flooding~~normal and credible abnormal conditions. Flooding (up to 60 cm ~~of flood level)~~needs to be considered only if piping could be subject to the flood conditions in the event of a local intense precipitation. ~~For example, the spacing restriction might not be satisfied, but the piping might have fewer than 64 intersections.~~ LBDCR-10-0002

3.4.3.8.3 Cascade Header Pipework

The pipe intersection criticality calculation described in Section 3.4.3.8.2 is for a generic piping arrangement. This calculation does not bound the configuration of the cascade header pipework because the parallel pipes are closer together than the minimum spacing required for a given pipe size. A separate MONK8A (SA, 2001) calculation was performed to demonstrate criticality safety of the cascade header pipework for the most reactive section of the pipework configuration as a bounding calculation.

The cascade header pipework calculation modeled the pipework inside a cascade hall and included a row of nearby centrifuges for interaction. Interaction with a mobile vacuum cleaner is considered unlikely as the pipes are over 3 m from the ground level. However, for conservatism, the vacuum cleaner filled with wet uranyl fluoride at optimum moderation was included and placed in the most reactive position. The vacuum cleaner was conservatively modeled as a cylinder of 66 cm in length and 20.3 cm in diameter (21.4 L), though any vacuum cleaner approved for use at the facility will be limited to 7 L in volume. Spurious reflection was modeled by wrapping 2.5 cm of water around all pipes and equipment. Flooding consideration is unnecessary because of the elevation of the pipework.

Movement of the pipework due to the effect of a seismic event was taken into account. The pipes can move a maximum of 12 mm in any direction radially from their nominal positions. All of the pipes were therefore modeled at least 24 mm closer to each other and to the centrifuges to simulate the seismic upset condition. LBDCR-10-0012

The results of the calculation show that the cascade header pipework is safely subcritical for normal and credible abnormal conditions for enrichment up to 6%. The maximum k_{eff} (k_{calc} + $3\sigma_{calc}$) is less than the limit of 0.95 for the credible worst-case configuration and condition, which considers interaction with fixed plant equipment (centrifuges) and a mobile vessel (vacuum cleaner) as well as movement of the pipework due to a seismic event.

3.4.3.8.4 Cascade Valve Frames

The configuration of the cascade valve frame pipework also deviates from the pipe intersection calculation described in Section 3.4.3.8.2, as some of the parallel pipes could be closer together than the required minimum spacing for a given pipe size. A separate MONK8A (SA, 2001) calculation was performed to demonstrate criticality safety of the cascade valve frame for the most reactive configuration and condition as a bounding calculation.

The calculation modeled the sections of the system which could contain enriched material including the product section of the valve frame at 6% enrichment and the contingency dump feed and tails systems piping at 1.5% enrichment. Interaction with other plant equipment and mobile vessels was taken into account by modeling: (1) a conservative 21.4 L vacuum cleaner in contact with the product pipes, (2) a mobile rig simulated by the bounding product vent vacuum pump/chemical trap set with the middle chemical trap positioned in contact with the valve frame and vacuum cleaner, and (3) a mobile 14 L pump moved for maintenance in transit at 60 cm edge separation from the cascade frame. All of these interacting components were filled with wet uranyl fluoride at 6% enrichment ~~and~~either maximum expected or optimum moderation. Spurious reflection was modeled by wrapping 2.5 cm of water around all pipes and equipment. The cascade valve frame is located on the second floor of the process services corridor and would not be subject to flooding. LBDCR-10-0037 LBDCR-10-0037 LBDCR-10-0012

The results of the calculation show that the cascade valve frame is safely subcritical for normal and credible abnormal conditions for enrichment up to 6% for the product section, 1.5% for the contingency dump system piping and 1.5% fort the remaining piping and valves (feed and tails sections). The maximum k_{eff} (k_{calc} + $3\sigma_{calc}$) is less than the limit of 0.95 for the credible worst-case configuration and condition analyzed. LBDCR-10-0037

Movement of the pipework and valves in the cascade valve frame due to a seismic or tornado missile event is inconsequential to criticality, as the reactivity of the system is driven by the interacting components such as the vacuum cleaner and mobile rig. Further, significant movement would result in severe damage to the cascade valve frame which would no longer retain optimally moderated uranyl fluoride or accumulate additional material to cause an inadvertent criticality.

3.4.3.8.5 Mobile Cascade Evacuation and Sampling Rig System

The Mobile Cascade Evacuation and Sampling Rig System consists of the Mobile Evacuation Rigs for cascade evacuation, and the Mobile Sampling Rigs for sampling both product and tails material from an individual cascade. These rigs are connected via the cascade valve frame. The rigs share many common features and components such as chemical traps, vacuum pump, oil adsorption filter and exhaust filter; and are very similar to the product vent vacuum pump/chemical trap set. LBDCR-10-0012

A nuclear criticality safety evaluation performed for the Mobile Rigs demonstrates that the criticality safety of the Mobile Rigs is bounded by the case for the product vent vacuum pump/chemical trap set described in Section 3.4.4.8.3. The evaluation considers the clustered arrangement of the components involved and compares the volume available for fissile material accumulation between the Mobile Rigs and bounding product vent vacuum pump/chemical trap set. The k_{eff} for these mobile rigs cannot exceed that of the bounding case for the product vent vacuum pump/chemical trap set.

3.4.4 (*See SAR § 12.1.2.3~~4.2.4~~*) Product Take-off System LBDCR-10-0033

3.4.4.1 Functional Description

The primary function of the Product Take-off System is to provide continuous withdrawal of the enriched gaseous UF_6 product from the centrifuge cascades (REF. Figure 3.4-10, Process Flow Diabram Product Take-Off System). The product is transported via a train of vacuum pumps to chilled 30 in diameter cylinders where the UF_6 is desublimed. A secondary function of this system is to provide a means for venting light gas impurities from the enrichment process.

Under normal operating conditions, the Product Take-Off System produces small intermittent quantities of gaseous effluent from the treatment of light gas impurities in the Product Vent Subsystem. Additional small quantities of intermittent gaseous effluent are produced from purging and evacuating the flexible piping used to connect the product cylinders to the system during cylinder changeout. This effluent from the Product Vent Subsystem is routed to the Pumped Extract GEVS for further treatment. Solid wastes are produced from periodic change-out of chemical and oil traps. There is no liquid effluent directly produced in this system. Vacuum pumps are taken out of service for maintenance and the pump oil is reprocessed in the CRDB and reused.

The Product Take-off System (Ref. Figure 3.3-3, UF_6 Handling Area Equipment Locations) is located in the SBM UF_6 Handling Area and the Process Services Corridor. The Product Take-off System is operated from the Control Room, with the exception of locally controlled vacuum pump, cylinder maintenance, and preparation operations.

3.4.4.2 Major Components

The major Product Take-off System components are listed below.

A. Product System Main Header

The product system main header connects each cascade to the product pumping trains. Pressure transducers in the header protect the cascades from air ingress or back flow of UF_6.

B. Product Pumping Trains

Each Cascade Hall has three product pumping trains connected in parallel. Two pump trains are on-line while the other is in standby or maintenance. Each train consists of a set of two vacuum pumps connected in series. Manual and automatic valves isolate each pump set. The pump train transports the UF_6 product from each cascade to the Product Low Temperature Take-off Stations.

C. Product Low Temperature Take-off Stations

The Product Low Temperature Take-off Station (LTTS) consists of a composite-wall insulated box. The Product LTTS panels have a non-flammable insulated core, and are vapor sealed to prevent ice build-up within the insulation. The Product LTTS is designed to prevent ice build-up within the box. The Product LTTS totally encloses the cylinder, cylinder support structure, and rails. The front of the Product LTTS has a single door through which the cylinder is inserted and removed. The back of the Product LTTS has an opening through which the cylinder is connected to the UF_6 piping. A rubber bellows is fitted around the back opening, which envelops the cylinder valve, to prevent cooled air from leaking out of the Product LTTS. A hot air blower is used to keep the valve and its surrounding area heated. The door frames, access port, rubber collar, and defrost condensate piping are provided with heat tracing to prevent ice build-up.

Each Product LTTS has a chiller unit, which is mounted on the top of the Product LTTS. This unit provides the cold air necessary to decrease the temperature in the box sufficiently to remove the thermal energy from the UF_6 gas and cause it to desublime in the cylinder. The chiller unit has a defrost cycle to remove ice from the cooling coils. This is done with a defrost heater at the coils. Condensate from the chiller is routed to a safe-by-design drip pan to allow the water to evaporate. LBDCR-10-0039

The valves used to route the product to the appropriate Product LTTS, or for venting and purging, are mounted in a valve frame near each Product LTTS.

Each Product LTTS is provided with a weighing system, which incorporates a weigh frame, four load cells, and associated weighing instrumentation. The weigh system provides continuous measurement of the mass of UF_6 accumulating in the product cylinder.

D. Product Vent Subsystem

The Product Vent Subsystem consists of a product vent transfer header, two horizontal UF_6 cold traps, two heater/chiller units, two automatic control valves, and two vacuum pump/chemical trap sets. These components are discussed below.

1. UF_6 Cold Traps with Heater/Chiller Units.

Each UF_6 cold trap consists of an insulated horizontal tube with internal baffles and a dedicated heater/chiller unit. Each heater/chiller unit contains approximately 70 L (19 gal) of silicon oil, as the heat exchange media, which circulates around each cold trap. These Product Vent Subsystem heater/chiller units are separated by over 30 m (100 ft) from other heater/chiller units in similar subsystems. The UF_6 cold trap is chilled to cause UF_6 in the vent gases to desublime. It is heated to sublime the trapped UF_6 for transfer back to a product cylinder. Each end of the UF_6 cold trap is heat traced to prevent the UF_6 from desubliming and blocking the inlet and outlet. The heat tracing also prevents ice from building up on the outside of the UF_6 cold trap and affecting the weighing system.

Each UF_6 cold trap is provided with a weighing system, which incorporates a weigh frame, four load cells, and associated weighing instrumentation. The weigh system provides continuous measurement of the mass of UF_6 accumulating in the UF_6 cold trap and indicates when it is full to prevent overfilling.

2. Vacuum Pump/Chemical Trap Sets.

The vacuum pump/chemical trap set consists of a carbon trap, ~~an~~two aluminum oxide traps, and an insulated vacuum pump with internal nitrogen purge and an aluminum oxide oil traps on the pump suctin and mechanical oil trap (exhaust filter) on the pump discharge ~~either side~~. The exhaust from the vacuum pump goes to the Pumped Extract GEVS. LBDCR-09-0110

The activated carbon ~~trap~~ removes small traces of UF_6. The aluminum oxide ~~trap~~ removes HF. The oil traps ~~are installed before the vacuum pump to~~ prevent oil migration both upstream and ~~back diffusion and after the vacuum pump to prevent oil from being transferred~~ into the Pumped Extract GEVS. LBDCR-09-0110

E. Assay Sampling System

Product Assay Sample piping installed on the product header after the product pumping trains allows a product assay sample to be collected in a sample bottle. The sample system is comprised of automatic and manual valves, nitrogen purging, and an evacuation pump and trap (Assay Sampling Rig) set similar to the one described above. However, this set contains one mixed-bed trap containing both activated cardon and aluminum oxide. This pump/trap set also contains a flow restriction device (IROFSC21) on the suction side of the pump. LBDCR-09-0110

F. On-line Mass Spectrometer System

The On-line Mass Spectrometer System piping connection installed on the product header, after the product pumping trains, allows a small gas sample to be fed to an on-line mass spectrometer. The on-line mass spectrometer analysis results allow any required adjustments to be made to the cascades.

The temperature of the UF_6 cold trap is controlled during cooling to desublime any UF_6 and for heating during sublimation to empty the UF_6 cold trap of collected UF_6 (gas back). A low alarm warns of a chiller unit fault. A high alarm closes the UF_6 cold trap outlet valve and a second high alarm warns of high temperature during gasback. The final high alarm trips the unit off-line to avoid desublimation of UF_6 in the header. LBDCR-09-0110

2. Vacuum Pump/Chemical Trap Sets.

The carbon trap has a temperature instrument that prevents overheating. If the high temperature setpoint is reached, a signal is set to the PCS~~To prevent the carbon trap from overheating and overfilling with product, there are two instruments, which provide an alarm~~ to warn the operator of the abnormal condition.

The second (downstream) activated aluminum oxide (Al_2O_3) trap on the vacuum pump/chemical trap set is ~~also~~ equipped with a weigh system. The weigh system on the aluminum oxide trap only displays a weight locally. There is no control function on this weight indicator.

Increase in weight is used to monitor accumulation of UF_6 in the carbon trap and HF in the aluminum oxide trap. The traps are replaced based on the accumulated weight.

E. Assay Sampling Subsystem.

The assay sampling header pressure is monitored to prevent air entering the Product Take-off System and Tails Take-off System. A high level alarm closes the assay sampling inlet valves. The sample inlet valves (product and tails) and the sample evacuation valve are interlocked, allowing only one of the valves to be open at any one time. Both sample inlet valve open cycles are timed.

3.4.4.8 Criticality Safety

3.4.4.8.1 Product Cylinders

The product enrichment within a 30B product cylinder is limited to 5.0 $^{w}/_{o}$ ^{235}U by the plant design, configuration and operating features. The UF_6 content is limited to no more than the 30B cylinder fill limit by the plant design and operating features. The moderation within the cylinder is controlled by a series of plant operating features. These features include, among others, checks that the cylinder is clean and empty prior to the commencement of fill. Also, the moderator (H_2O, HF) entering the cylinder is monitored during the time the cylinder is connected to the plant UF_6 systems.

The criticality analysis with MONK8a (SA, 2001) models effectively infinite two-dimensional arrays of full 30B product cylinders. Inside each cylinder a spherical region of 6% enriched UO_2F_2/water mixture having a radius at optimum H/U ratio is located at the end of the cylinder. The remainder of the interior of the cylinder is assumed to be filled with 6.0% ^{235}U enriched low density UF_6 with no moderator (water). Cylinders in the arrays are placed with the valve and base ends alternately in contact, so that the moderated region in a given cylinder is in the closest possible proximity to the moderated region in an adjacent cylinder. All cylinders are considered to be lying on a concrete pad one meter thick. Sphere ~~M~~moderation is varied to obtain the optimum H/U ratio~~n~~. Worst-case external reflection/moderation conditions are found by varying the density of the interstitial water between cylinders to simulate foam, mist, frost, or snow. The calculation also assumes one transient 30Bcylinder above (touching) the array to simulate movement in/out/over the array. Criticality safety of Type 30B product cylinders depends on the control of moderator content. ~~Criticality safety is achieved by ensuring that there is less than 0.985 (2.1609 lb) of hydrogen present in a Type 30B cylinder.~~ LBDCR-10-0037 LBDCR-10-0012 LBDCR-10-0037 LBDCR-10-0037 LBDCR-10-0012 LBDCR-10-0012

~~Since the NEF will not use 48Y cylinders for product material, subsequent discussion focuses on 30B product cylinders only.~~ The criticality analysis for flooding up to 60 cm of water shows that a base array of 30B product cylinders with a transient 30B cylinder directly on top remains safe (i.e., k_{eff} < 0.95) under all conditions analyzed~~, as this physical configuration is bounded by a base array of 30B product cylinders with a transient 48Y cylinder analyzed~~. LBDCR-10-0012 LBDCR-10-0012

For the 30B cylinder, the condition that met the upper safety limit had an H/U ratio of 10.5 with an interstitial water density of ~~0.25~~0.10 g/cm3 (~~15.6~~6.24 lb/ft3). Thus, the maximum safe mass of hydrogen in each type product 30B cylinder in an array was determined to be ~~0.95~~0.98 kg (~~2.09~~2.16 lb) present in the form of ~~8.5~~8.8 kg (~~18.7~~19.4 lb) of water. LBDCR-10-0012

3.4.4.8.2 UF_6 Cold Traps

Although the cold traps have a large internal volume they are individually safe by shape, the trap body having an internal diameter of 20.3 cm (8.0 in). This compares with the safe diameter of ~~21.9~~22.4 cm (~~8.6~~8.82 in) for 6.0 $^{w}/_{o}$ enrichment. Individual cold traps are thus safe in isolation for any uranyl fluoride/water mixture. In practice the maximum H/U atom ratio in the cold traps will be 7; however, a sensitivity study is performed to determine the optimum H/U ratio, providing an additional margin of safety. LBDCR-10-0012

~~The cold trap and the standby cold trap are separated from each other by center-to-center separation of 110 cm (43.3 in). There is a minimum edge separation of 180 cm (70.9 in) from any other fixed plant vessels that can accumulate enriched uranium. The pair of traps can thus be considered to be neutronically isolated from other fixed vessels.~~

The cold trap and the standby cold trap are separated from each other by center-to-center separation of 110 cm (43.3 in). Calculations were performed on the isolated pair of completely filled cold traps and were found to be substantially subcritical~~ with k_{eff} = 0.8030~~. The calculations assumed an enrichment of 6.0 $^{w}/_{o}$, an optimum H/U ratio of ~~7~~14 and 2.5 cm (0.984 in) water reflection placed ~~at the model boundary~~around the outer surfaces of the trap to simulate spurious reflection. LBDCR-10-~~LBDCR-~~10-0037

According to the restrictions on movement of mobile vessels, one vessel can come into contact with a trap but any others have to be kept at 60 cm (23.6 in) separation.

For interaction, MONK8A (SA, 2001) calculations ~~have been~~were performed in which both cold traps are brought together and a 21.4 L vacuum cleaner is in contact with, and placed below, ~~one~~both of the cold traps, and another vessel (a 14 L (3.7 gal) product vent vacuum pump) is at 60 cm (23.6 in) edge spacing from one of the ~~same~~ cold traps. ~~These are typical of Separation Plant mobile vessels. Each mobile vessel was modeled with the appropriate uranic fill; the~~The cold traps, vacuum cleaner and mobile pump ~~was~~were all filled with uranyl fluoride/water mixture at 6% enrichment with optimum moderation (H/U=12)~~, and the vacuum pump (conservatively containing hydrocarbon oil) was filled with uranic breakdown of composition UF4-10.5CH2.~~ Spurious reflection with 2.5 cm of water for each component was modeled. Flooding up to 60 cm of water was included. The resulting k_{eff} is less than the limit of 0.95, meeting the subcriticality safety requirement~~= 0.8229 shows a slight increase in reactivity with respect to the isolated pair of traps using the same conservative assumptions. The vacuum cleaner was assumed have an internal diameter of 20.3 cm (8.0 in) and length 66 cm (26.0 in) and was assumed to be entirely filled with uranic material with an enrichment of 6.0 w/o. MONK8A (SA, 2001) calculations have been carried out for an isolated cylinder using these dimensions, filled with uranyl fluoride/water at optimum moderation and with 2.5 cm (0.984 in) water reflection. This gave a value for k_{eff} of 0.8037. The vacuum cleaner has~~HEPA filtration on the exhaust, and will be dedicated for cleaning operations where uranic material is involved and will be marked clearly.~~

LBDCR-10-0002

LBDCR-10-0002

LBDCR-10-0037

~~Additionally, calculations were performed in which it was assumed that there are no movement controls, and both the vacuum cleaner and pump were in contact with one of the cold traps. Even with 2.5 cm (0.984 in) spurious water reflection placed around each unit, and at enrichment of 6.0 w/o, the result remained substantially subcritical with k_{eff} = 0.8673. This result assumes no flooding. The re-analysis for flooding up to 60 cm of water shows an increase in k_{eff} to 0.904 maxumim, which is still less than the limit of 0.95. Hence, the flooded conditions remain safe.~~

LBDCR-10-0002

The cold traps have therefore been determined to be safe both as a pair in isolation and touching while interacting with other fixed plant or vessels in movement for ^{235}U enrichments up to 6.0 w/o.

3.4.4.8.3 Vacuum Pump / Chemical Trap Sets

The components of the Product Vent Subsystem are individually safe-by-design per Tables 3.7-7. The entire Subsystem is safe by design by physical arrangement as demonstrated by MONK8A (SA, 2001) calculations. The MONK8A model included the following process equipment: a carbon chemical trap, two alumina oxide chemical traps , oil adsorption filter, exhaust filter, and rotary vane pump. Transient components include a 7L vacuum cleaner, and a mobile pump or pump set (18 L mobile volume or the Leybold WS1001/251 roots pump set).~~These chemical traps of the Product Vent Subsystem are individually safe by diameter (20.3 cm (8.0 in) compared with the safe diameter of 21.9 cm (8.6 in) calculated for 6.0 w/o enrichment). However, calculations have been performed concerning the effect of possible neutron interaction with nearby (uranium bearing) equipment.~~

LBDCR-10-0002

The process equipment was filled entirely with uranyl fluoride/water at an enrichment of 6.0 w/o and ~~an optimized~~worst credible H/U ratio of 7 for process conditions. The transient components were modeled with an optimized H/U ratio of 12. The internal structure or fill material was not credited within any components. This model maximized the mass of fissile material within the components and provides added conservatism.

LBDCR-10-0037

The components were arranged in a configuration to represent seismic upset conditions or impacts from missiles (tornado or construction). The chemical traps were placed as close as physically possible and the remaining components were clustered together. This arrangement maximized the effects of neutron interaction between the components. Neutron interaction between uranium bearing transient components was considered by modeling a 7 L vacuum cleaner in contact with the chemical traps and either a single 18 L volume or a product Roots pump set (Leybold WS1001/251 pumps) in contact with the vacuum cleaner. The standby product vent subsystem was included in the model. Spurious reflection of 2.5 cm water around each component was modeled. Flooding to 60 cm was included in the model to represent extreme conditions. LBDCR-10-0002

~~In the MONK8A (SA, 2001) calculations for the Product Vent Subsystem, the plant spacing to the edge of the standby vent system is assumed to be 50 cm (19.7 in). The standby vent system has been included in the model. The traps were both assumed to fill entirely with uranyl fluoride/water with no restriction on water content. This is conservative, as in practice the H/U ratio of the uranyl fluoride in the traps will have a limiting upper value of 7. Also, the space within the trap, which would normally be occupied by carbon or alumina, is modeled as being filled with uranic material. This maximizes the mass of fissile material within the traps and provides added conservatism. The pump, alumina traps, oil trap and exhaust filter are assumed to be filled with uranyl fluoride/water of unlimited water content. This is conservative, as virtually no uranium is expected in these components.~~ LBDCR-10-0002

The vacuum pump/chemical trap sets have been shown to be safe (i.e., $k_{eff} < 0.95$) under normal and credible abnormal conditions for enrichments up to 6.0 $^{w}/_{o}$. The vacuum cleaner is limited to 7 L. It has HEPA filtration on the exhaust, and will be dedicated for cleaning operations where uranic material is involved and will be marked clearly. Transient components allowed within the 60 cm spacing are limited to a volume of 18 L or the product Roots pump set (Leybold WS1001/251). Movement of components due to seismic, tornado missile and onsite construction events would not lead to an inadvertent criticality. ~~Calculations were performed to account for interaction with other vessels in movement. According to the restrictions on movement, one mobile vessel can come into contact with one of the fixed chemical absorber traps, but other mobile vessels are assumed to be at 60 cm (23.6 in) separation. The case modeled was for a vacuum cleaner (of diameter 20.3 cm (8.0 in) and length 66 cm (26.0 in)) to be brought into contact with the vacuum pump in the product vent array. One other item, a 14 L (3.7 gal) rotary vane pump, was placed at 60 cm (23.6 in) edge spacing from the vacuum cleaner. The vacuum cleaner was assumed to have an internal diameter 20.3 cm (8.0 in) and length 66 cm (26.0 in) and was assumed to be entirely filled with uranic material with an enrichment of 6.0 $^{w}/_{o}$. MONK8A (SA, 2001) calculations have been carried out for an isolated cylinder using these dimensions, filled with uranyl fluoride/water at optimum moderation and with 2.5 cm (0.984 in) water reflection. This gave a value for k_{eff} of 0.8037. The vacuum cleaner has HEPA filtration on the exhaust, and will be dedicated for cleaning operations where uranic material is involved and will be marked clearly.~~ LBDCR-10-0002 LBDCR-10-0002

~~The MONK8A (SA, 2001) calculation for the worst case, where all vessels were assumed to be entirely filled with uranyl fluoride/water mixture at optimum moderation, a trap and a vacuum cleaner are in contact with one of the fixed pumps, and all pumps were modeled with volumes of 14 L (3.7 gal), yields a k_{eff} = 0.9328.~~

It should be noted that the above MONK8A (SA, 2001) model represents extreme accident conditions in terms of uranium accumulation and moderator ingress. It should also be noted that the simple MONK8A (SA, 2001) model used for the vacuum pump in all of the calculations is conservative. Since the real shape of the internal free volume is far from optimum, an explicit model of the pump is expected to result in a significant reduction in k_{eff}.

~~The vacuum pump/chemical trap sets have been shown to be safe under normal operating conditions and credible abnormal operating conditions, for ^{235}U enrichments up to 6.0 $^{w}/_{o}$.~~ LBDCR-10-0002

~~The above analysis assumes no flooding. The re-analysis of the worst-case configuration using the 21 L vacuum cleaner for flooding up to 60 cm results in a maximum k_{eff} of 0.980. The vacuum cleaner that moves in contact with the pump/trap skid is a key component contributing to reactivity, as the entire internal volume of the vacuum cleaner rather than the holding bag only is filled with uranyl fluoride/water mixture. To meet the safe-by-design requirements, vacuum cleaners to be used in the process will have volumes limited to less than 7 liters. With this limit, the maximum flooded k_{eff} is 0.9355, meeting the criticality safety requirement for sub criticality.~~

~~The analyzed condition for the vacuum pump/chemical trap sets is physically possible only during maintenance activities. Since it is unlikely that maintenance will be conducted using a vacuum cleaner for cleanup of breakdown products during severe weather, the condition should not exist during the flood event. Further, the event is expected to have adequate warning time to allow workers to move and secure mobile components or units containing uranic material, thus reducing the likelihood of a flood-induced criticality. If the vacuum cleaner is not present, the vacuum pump/chemical trap sets meet the sub-criticality requirements when flooded up to 60 cm.~~ LBDCR-10-0002

3.4.4.8.4 Product Pumping Train UF_6 Pumps

~~More than 200 cm (78.7 in) separates each Product Pumping Train from other uranium containing vessels, so only interaction with mobile components needs be considered. Additionally, when being removed for repair or maintenance, a UF_6 pump might pass near another similar pump.~~ LBDCR-10-0002

The pump combination unit consists of two Leybold pumps, models WS1001 series and WS251 series, positioned in a fixed frame. The WS251 series has a nominal volume of 6.6 L (1.75 gal).The WS251 series pump is modeled as a equiaxed cylinder of the same volume. The WS1001 series pump has a nominal volume of 16.6 L (4.4 gal).MONK8A (SA, 2001) calculations were performed to show the criticality safety of the Leybold WS1001/WS251 product roots pump combination at 6% enrichment. From this analysis, the pump combination in isolation can be regarded as being safe. ~~There is potential for a second pump unit to approach when being removed for maintenance or for three pumps in close proximity (within their frames) from a seismic event. Calculations were performed on up to four pairs of pumps as if their frames were touching. Results were k_{eff} = , 0.95), assuming an enrichment of 6.0 $^{w}/_{o}$ and an optimum H/U ratio of 14.~~ LBDCR-10-0002

To simulate the product pumping trains, the ~~r~~Roots pumps were modeled as equiaxed cylinders (equal length and diameter) with volumes slightly larger then the maximum theoretical free volumes of the pumps. Tolerances were taken into account, as was the 0.4 cm thickness of the iron casing. The WS1001 pump was rounded up to a volume of 17.6 litres and the WS251 was rounded up to a volume of 7.1 litres. ~~An additional 14 litre pump was also moduled as an equiaxed cylinder.~~ Spurious reflection due to walls, personnel, etc. was taken into account by applying 2.5 cm of water reflection to all vessels in the model.

LBDCR-10-0002

To consider interaction of mobile vessels, calculations were performed which added a vacuum cleaner to the pumps. The vacuum cleaner was conservatively modeled as a cylinder of 66.0 cm length and 10.15 cm radius with a volume of 21.4 L. ~~The distance between the fissile volumes was modeled to be 4.0 cm.~~ The center of the vacuum cleaner was aligned with that of the pumping unit. A mobile second WS1001 pump was brought into contact with the fixed pump set. An additional 14 L vacuum pump in transit at 60 cm edge spacing from the large WS1001 pump was included in the model. All of the components in the model were filled with wet uranyl fluoride at 6% enrichment and optimum moderation. Spurious reflection was taken into account by modeling 2.5 cm of water around the vacuum cleaner and mobile pumps. The effect of flooding up to a water depth of 60 cm was added for conservatism, despite that the product pumps are located on the second floor of the process services corridor which could not be subject to flooding. ~~In all cases the results was~~

The combination of the pump set and interacting units results in k_{eff} <0.95. It should be noted that the pumps are individually safe by volume as the safe volume for 6% enriched ~~vranyl~~ uranyl fluoride is ~~18~~19.3 ~~litres~~liters. It should also be noted that the vacuum cleaner approved for use is limited to a 7 ~~litre~~liter volume rather than the conservative 21 L analyzed.

~~Even assuming the most conservative geometry and moderation conditions, k_{eff} remains substantially subcritical.~~ Note that the movement of vessels considered above is considered to be part of normal operating conditions. The abnormal operating condition pertaining to the vessels concerns the assumption that all the vessels are completely filled with uranic breakdown at optimum moderation. This would be extremely unlikely for a single vessel in the array, and even more unlikely for more than one vessel. LBDCR-10-0002

To assess the effect of a seismic or tornado missile event, multiple pump sets were modeled in a conservative configuration by an infinite one-dimensional array of pump sets with a 21.4 L vacuum cleaner inserted between each consecutive pair. This configuration bounds a linear array of pump sets, as the inserted vacuum cleaner is a significant contributor to the system reactivity. For this configuration, it is unnecessary to include flood water as the product pumping trains are located on the second floor of the process services corridor, and flooding due to local intense precipitation is a separate external event. The resulting k_{eff} is less than 0.95, confirming the safe condition for a seismic or tornado event. LBDCR-10-0002

LBDCR-10-0002

It can be concluded that:

- An array of ~~up to four~~ pump units is safe at any spacing. No restriction is placed on the moderator content of the pump units.

- One pump or pump unit may be moved, and may approach another similar pump unit or vacuum cleaner (of safe diameter) at any orientation, and without spacing restrictions. Other pumps (of 14 L (3.7 gal) internal volume or less) must not approach within 60 cm (23.6 in) of a product pumping train. No restriction is placed on the moderator content of any of the vessels.

~~The conclusion of the criticality calculations for the product pumping train UF_6 pumps (ISAS, Section 3.4.4.8.4) remain valid under flooded conditions, as k_{eff} is less than 0.95 for all cases with various water levels.~~ LBDCR-10-0002

3.4.4.8.5 Process Gas Pipework

During normal operations, the Process Gas Pipework contains gaseous UF_6. The gaseous UF_6 stream flows out of the cascade and into the Process Gas Pipework. Through the Process Gas Pipework, the flow passes via the product and tails Roots pumps into the product and tails take-off cylinders in the UF_6 Handling Area.

The pipe intersection criticality calculation described in Section 3.4.3.8.2 is for a generic piping arrangement. This calculation does not bound the configuration of the process gas piping in the Process Services Corridor because the parallel pipes are closer together than the minimum spacing required for a given pipe size. A separate MONK8A (SA, 2001) analysis was performed to demonstrate criticality safety of the Process Gas Pipework for the most reactive section of the pipework configuration as a bounding calculation.

To simulate abnormal operating conditions, calculations were performed in which the Process Gas Pipework was filled entirely with wet uranyl fluoride at optimum moderation. The enrichment used for each pipe was 1.5% for pipes that could contain dump material, and 6% for product and feed pipes to bound multiple piping configurations. Spurious reflection was modeled by 2.5 cm of water around each pipe. LBDCR-10-0002

The calculations included the gas pipework in the following areas: Process Services Corridor (PSC), Assay Sampling Station at the end of the PSC, Product Valve Stations in the UF_6 Handling Area, and Tails Valve Stations in the UF_6 Handling Area. Based on the MONK8A calculations, the pipework in the PSC represents the most reactive configuration. In all cases, k_{eff} is less than the limit of 0.95.

3.4.4.8.6 Assay Sampling Rig

The Assay Sampling Vacuum Pump and Trap set (referred to as the Assay Sampling Rig) consists of manual and automatic isolation valves, a mixed bed chemical trap, a rotary vane vacuum pump, an Al_2O_3 oil adsorption filter and an exhaust filter. Each individual component is safe-by-design by physical size (diameter or volume). The Rig is very similar to the product vent vacuum pump/chemical trap set. The Rig as a whole is safe-by-design by physical arrangement as demonstrated in a nuclear criticality safety evaluation through comparison to a bounding calculation performed for the product vent vacuum pump/chemical trap set described in Section 3.4.4.8.3. LBDCR-10-0002

3.4.4.8.7 Mobile Maintenance Rig

The Mobile Maintenance Rig used consists of a K300 cold trap section, a chemical trap section, and a pump section containing a WS251 roots pump, a rotary vane pump, an Al_2O_3 oil filter and an exhaust filter. The Rig is used to evacuate pipework and equipment that has been exposed to UF_6 and HF prior to maintenance. The evacuated contents are pumped through a cold trap and chemical traps for removal of any UF_6 and HF and exhaust to the Gaseous Effluent Ventilation System.

The calculation modeled the three sections touching each other rather than spaced out. Items may need to be removed from the Rig for maintenance and might approach one another without restriction. Models were constructed whereby the Al_2O_3 oil filter or Roots pump was moved and placed in contact with the rotary vane pump and exhaust filter in the pump section. Interaction with other plant equipment and mobile vessels was taken into account by modeling: (1) an approved 7 L vacuum cleaner in contact with the rotary vane pump or the chemical trap, and (2) a Roots Pump set consisting of a WS1001 Roots Pump and a WS251 Roots Pump in transit at 60 cm edge separation from the rotary vane pump. All of the components were filled with wet uranyl fluoride at 6% enrichment and optimum moderation. Spurious reflection was modeled by wrapping 2.5 cm of water around each component. Flood water 60 cm deep was also included to represent an abnormal operating condition. LBDCR-10-0002

The results of the calculation show that the Mobile Maintenance Rig is safely subcritical for normal and credible abnormal conditions for enrichment up to 6%. The maximum k_{eff} (k_{calc} + $3\sigma_{calc}$) is less than the limit of 0.95 for the credible worst-case configuration and condition analyzed.

The effect of a seismic or tornado missile event was analyzed by conservatively assuming that the items on the Rig were clustered together rather than scattered apart. A model was constructed whereby the rig was in contact with the product Roots Pump set and a vacuum cleaner touched the rotary vane pump. In addition, the Roots pump from the Rig was moved from its nominal position to be in contact with the rotary vane pump and exhaust filter. Finally, the cold trap and chemical trap were moved from their nominal position to be conservatively clustered around the other items. Under these conditions, k_{eff} (k_{calc} + $3\sigma_{calc}$) remains within the limit of 0.95, although it is not credible for such configuration to be realized in such an external event. LBDCR-10-0002

3.4.4.8.8 Pressure Transducer Calibration Wagon

The mobile Pressure Transducer Calibration Wagon consists of manual and automatic valves, a number of digital pressure transducers, a pirani-type pressure measurement device, a mixed-bed chemical trap, two rotary vane vacuum pumps, and a turbo-molecular vacuum pump. The Calibration Wagon allows for the calibration of pressure transducers located throughout the UF_6 process systems to monitor process pressures. The items on the Calibration Wagon are safe-by-design individually. The Calibration Wagon as a whole is safe-by-design by physical arrangement as demonstrated in a nuclear criticality safety evaluation through comparison to a bounding calculation performed for the product vent vacuum pump/chemical trap set described in Section 3.4.4.8.3.

3.4.4.8.9 On-Line Mass Spectrometer

LBDCR-10-0002

The Online Mass Spectrometer consists of manual and automatic isolation valves, a vacuum chamber, cold traps, manual sampling manifolds, automatic sampling batch chambers, quadrupole mass spectrometer, an ion vacuum pump, a rotary vane vacuum pump, and a diffusion vacuum pump. The Mass Spectrometer Room on the second floor of the Separations Building Module contains one Online Mass Spectrometer, sufficient for sampling Separations Building Module Assay 1001 and 1002.

A nuclear criticality safety evaluation concludes that the Product Vent Pump / Chemical Trap Set (Section 3.4.4.8.3) analysis and the Product Roots Pumps analysis (Section 3.4.4.8.4) envelope the configuration and conditions for the Mass Spectrometer and that the k_{eff} of the Mass Spectrometer could not exceed that of the cases described. Therefore, the Mass Spectrometer is safe-by-design, meeting the subcriticality requirements.

3.4.5 *(See SAR § 12.1.2.~~44.2.5~~)* Tails Take-off System

LBDCR-10-0033

3.4.5.1 Functional Description

The primary function of the Tails Take-off System is to provide continuous withdrawal of the gaseous UF_6 tails from the centrifuge cascades (Ref. Figure 3.4-11, Process Flow Diagram Tails Take-off System). The tails are transported via a train of vacuum pumps to 48-in diameter cylinders where the UF_6 gas is desublimed. A secondary function of this system is to provide a means for evacuating centrifuge cascades under abnormal operating conditions. Most of the light gases from the separation process are discharged into the product stream, so venting of the tails system is seldom necessary.

Small, intermittent quantities of gaseous effluent are produced from purging and venting the flexible piping used to connect the UBCs (ie., 48Y Tails) to the system during cylinder changeout. This effluent is treated by the Tails Evacuation Pump/Chemical Trap Set to remove UF_6 or HF before being routed to the Pumped Extract GEVS for further treatment. Solid wastes are produced from periodic change-out of chemical and oil traps. There is no liquid effluent directly produced in this system. Vacuum pumps are taken out of service for maintenance and the pump oil is reprocessed in the CRDB and reused.

The Tails Take-off System is located in the UF_6 Handling Area and Process Services Corridor of the Separations Building Module (Ref. Figure 3.3-3 UF_6 Handling Area, Equipment Locations). The equipment is operated from the Control Room with the exception of maintenance and preparation activities, which are controlled locally.

3.4.5.2 Major Components

The Tails Take-off System major components are:

A. Primary Header

The tails primary header connects each cascade to the Tails Pumping Trains. Pressure transducers in the header protect the cascades from air ingress.

F. Assay Sampling Subsystem

Piping is installed in the secondary header for sampling. The tails assay sample is taken into sample bottles at this point. The sample system is comprised of automatic and manual valves, nitrogen purging, and an evacuation pump and trap set (Assay Sampling Rig) similar to the one described above. However, this set contains one mixed-bed trap containing both activated carbon and aluminum oxide. This pump/trap set also contains a flow restriction device (IROFSC21) on the suction side of the pump.

G. On-line Mass Spectrometer System

Piping is installed in the secondary header to allow a small gas sample to be fed to an on-line mass spectrometer. The results of the mass spectrometer analysis are used to make process adjustments to the cascades.

3.4.5.3 Design Description

The design bases and specifications are given in Table 3.4-6, Tails Take-off System Design Basis. Applicable Codes and Standards are given in Table 3.4-7, Tails Take-off System Codes and Standards.

The Tails Take-off System is dedicated to an individual Cascade Hall. The system is designed to continuously remove depleted UF_6 (tails) from the cascades under all operating conditions. The entire Tails Take-off System operates at subatmospheric pressure. In the event of a confinement barrier failure (e.g., pipe leak), releases of UO_2F_2 and HF is greatly minimized because air would migrate into the system rather than UF_6 exiting the system. This important safety feature greatly limits the likelihood of worker and public exposures.

There are ~~ten~~eleven Tails LTTSs for each Cascade Hall. Of these ~~ten~~, seven are on-line during normal operation. These seven are adequate for normal operations as well as peak flows generated during a cascade trip. One Tails LTTS is in standby auto. This Tails LTTS is automatically switched to on-line when one of the seven on-line cylinders is full. The ~~other two~~remaining Tails LTTS are in either standby manual (cylinder inside station but not on automatic), off-line, preparation (cylinder being removed or inserted), or maintenance mode. LBDCR-10-0026 LBDCR-10-0026

Gaseous UF_6 tails from the cascades flows from each centrifuge cascade, through the primary header, to the tails pumping trains. Typical primary header pressures are of the order of a few mbar (in. H_2O).

From the tails pumping trains the UF_6 flows through the secondary header to the UBCs housed in the Tails LTTSs. The secondary header pressure is limited to prevent UF_6 desublimation at ambient temperatures. Building ambient temperature is maintained so that heat tracing of the UF_6 piping is not required.

All components of the Tails Take-off System operate at subatmospheric pressure. Release of UF_6 and/or HF is unlikely because leakage, if it were to occur, would be inward to the system.

Materials of construction and fabrication specifications for the equipment and piping used in the Tails Take-off System are compatible with UF_6 at the operating conditions and have been proven by over 30 years of use in existing Urenco European enrichment plants.

3.4.5.4 Interfaces

The Tails Take-off System interfaces with the following systems and utilities:

A. Cascade System

B. Plant Control System

C. Nitrogen System

D. Compressed Air System

E. Pumped Extract GEVS

F. Electrical System

G. Hoisting and Transportation Equipment.

H. Contingency Dump LBDCR-10-0037

3.4.5.5 Design and Safety Features

The Tails Take-off system is designed and constructed to provide safe operation for plant personnel as well as the general public. Principal design features are as follows.

A. All piping, vessels, and pumps in the Tails Take-off System operate at sub-atmospheric UF_6 pressures.

B. Piping is all welded construction and process valves are bellows sealed.

C. Before carrying out any disconnections or connections of equipment, the piping is evacuated and purged with nitrogen. Flexible exhaust hoses connected to the Pumped Extract GEVS via a temporary local extract cross-connection, during initial plant operations, remove any releases from the work area.

D. Before discharge to the Pumped Extract GEVS, all gases flow across activated carbon and aluminum oxide to remove any traces of UF_6 and HF via the Tails Evacuation Pump/Chemical Trap Set.

E. Temperature in each Tails LTTS is monitored and controlled.

F. Cylinder overfill is prevented by two weight trips. A trip is at the desired net weight of UF_6 and a second trip is at the gross weight of the cylinder with UF_6 contents. Only the first trip is operator adjustable.

G. Removal of a connected cylinder from the Tails LTTS is prevented by an interlock system. Unless the flexible hose on the cylinder valve has been removed and locked in its "holster," a physical barrier prevents the cylinder transporter drawbridge from docking with station rails, preventing cylinder removal.

H. Hydrocarbon lubricants are not used in any pumps. All tails pumps are lubricated with perfluorinated polyether (PFPE) oil, a fully fluorinated synthetic oil.

I. Temperature in the Tails Evacuation Pump/Chemical Trap Set ~~carbon~~mixed bed trap is monitored and controlled. LBDCR-09-0110

For temperature control and protection from high temperatures, the Tails LTTS has a stand-alone control and protection system. The total system consists of three sensors. For main Tails LTTS temperature control, one sensor is mounted in the air return to the chiller unit and monitors the circulating air temperature. This sensor and local control maintains the Tails LTTS temperature. In addition to controlling the station temperature, one output is monitored by the Plant Control System (PCS) and warns when the air temperature rises to a pre-determined temperature. This would indicate a chiller failure or that the defrost heater is not functioning properly. When the defrost heater is on, the circulating air fan is off to minimize the increase in Tails LTTS air temperature.

In addition to the closed loop control system previously described, there are two independent and diverse temperature protection instruments. These provide extra safety margin to protect against increases in temperature that may occur if the heater control does not operate properly. The first instrument is a fail-safe hardwired RTD and the second instrument is a fail-safe thermocouple. Both of these instruments measure the temperature of air inside the LTTS. Both of these instruments will trip the defrost heater and fan power supply in the event the air temperature rises above their set point. If heater trip occurs from these two instruments, the Tails LTTS is automatically taken off-line and put into a standby mode. Both instruments are set to trip at a set point well below the calculated set point required to ensure cylinder integrity.

To prevent desublimation in the cylinder valve, hot air is blown over the valve with a hot air blower. A temperature sensor on the valve controls the temperature.

E. Tails Evacuation Pump/Chemical Trap Set

To prevent the activated carbon ~~trap~~ from overheating~~ and overfilling with UF_6~~, there is one instrument~~, a sensor,~~ that monitors the carbon trap temperature. This sensor will close the Tails LTTS vent valve when carbon trap temperature exceeds a pre-determined temperature. This blocks flow to the vacuum pump/chemical trap set. A flow restriction device is installed as a control feature on the suction of the vacuum to maintain a low flow rate. A flow restriction device is installed as a control feature on the vacuum pump suction to maintain a low flow rate. LBDCR-09-0110

3.4.5.8 Criticality Safety

The tails enrichment is less than 0.34%, which is inherently safe from a criticality standpoint. ~~No specific nuclear criticality analyses were performed for process equipment associated with the tails system, since the analyses for the product system bound the tails system with substantial margin based on the enrichment difference alone. However,~~ pPiping and components used for the tails system are ~~also~~ safe-by-design as shown in Table 3.7-8. Criticality safety for an assay dump at 1.5% enrichment to a single tails cylinder in the low-temperature take-off station is described in Section 3.4.8.8.3. The piping arrangement for the tails system at 1.5% enrichment is ~~well bounded by~~analyzed in the product piping arrangement ~~which assumes 6% enrichment~~analysis. LBDCR-10-0002 LBDCR-10-0037

3.4.6 (*See SAR § 12.1.2.54.2.6*) Product Blending System

LBDCR-10-0033

3.4.6.1 Functional Description

The primary function of the Product Blending System is to provide a means to fill 30B product cylinders with UF_6 at a specified ^{235}U concentration (Ref. Figure 3.4-12, Process Flow Diagram Product Blending System). This is achieved by either transferring product from one donor cylinder into one receiver cylinder or blending product from multiple donor cylinders into one or more receiver cylinders.

Small intermittent quantities of gaseous effluent are produced from purging and evacuation of flexible piping during connection and removal of both donor and receiver cylinders. The effluent is treated in the Blending and Sampling Vent Subsystem to remove UF_6 and HF, and then discharged to the Pumped Extract GEVS for further treatment. Solid effluents are produced from periodic change-out of chemical and oil traps. There are no liquid effluents directly produced in this system. When the Blending and Sampling Vent Subsystem vacuum pump is taken out of service for maintenance, the oil is reprocessed in the CRDB for reuse.

The Product Blending System is located in the Blending and Liquid Sampling Area of the Separations Building. It is operated from the Control Room, with the exception of preparation and maintenance activities that are performed locally at the equipment.

3.4.6.2 Major Components

The major components of the Product Blending System are listed below:

A. Blending Donor Station

A Blending Donor Station consists of an insulated box with a non-flammable insulated core. Each Blending Donor Station includes an electrical air heater and circulation fan to provide the thermal energy to sublime the solid UF_6 in the cylinder.

A weighing system is provided in the Blending Donor Station that consists of a weigh frame with four load cells. This system is used to provide continuous on-line weighing of the donor cylinder to monitor the quantity of UF_6. The Blending Donor Station weighing system is also used to indicate when the cylinder has transferred the required quantity of UF_6 and automatically close the Blending Donor Station outlet valve.

B. Donor Station Valve Hotbox

Valves in a Donor Station Valve Hotbox connect the donor cylinder to its Transfer Header, the Blending and Sampling Vent Subsystem, or the Nitrogen System. Manual and automatic isolation valves and pressure transducers are contained in the electrically heated Donor Station Valve Hotboxes to maintain them at a stable temperature. The UF_6 piping between the Blending Donor Station and Donor Station Valve Hotbox is heat traced.

C. Blending Transfer Headers

To provide operating flexibility there are two transfer headers that are used for transferring UF_6 from Blending Donor Stations to Blending Receiver Stations. Both UF_6 transfer headers are heat traced. In addition a vent header connects all the Blending Donor Stations and Blending Receiver Stations to the Blending and Sampling Vent Subsystem. The transfer headers are arranged such that a number of blending or transfer operations can take place at the same time.

D. Blending Receiver Station

A Blending Receiver Station consists of a composite panel box construction complete with rails for the electric carriage of the cylinder transporter. The Blending Receiver Station panels have a non-flammable insulated core and are vapor sealed to prevent ice build-up within the insulation. Each Blending Receiver Station incorporates an air chiller unit, with controls, to remove thermal energy from the UF_6 gas to cause it to desublime in the cylinder. The chiller unit has a defrost cycle, using a heater, to prevent ice buildup on the coils. Condensate from the chiller is routed to a safe-by-design drip plan to allow the water to evaporate. A hot air blower directed at the cylinder valve prevents UF_6 from desubliming and blocking the cylinder inlet. A weighing device is provided in the Blending Receiver Station (a frame with four load cells and associated instrumentation) to provide continuous on-line weighing of UF_6 in the receiver cylinder to prevent overfilling. LBDCR-10-0039

The front of the Blending Receiver Station is made up of a single door and the back is furnished with an opening to facilitate connection of the cylinder to the UF_6 piping. A rubber bellows is fitted around the back opening, which envelops the cylinder valve, to prevent cooled air from leaking out of the Blending Receiver Station. Similar seals on the other openings in the Blending Receiver Station minimize leaks for energy conservation. The Blending Receiver Station access openings are provided with heat tracing to prevent ice build-up.

E. Receiver Station Valve Hotbox

Valves in the Receiver Station Valve Hotbox connect the Blending Receiver Station to both UF_6 Transfer Headers, the Blending and Sampling Vent Subsystem, or the Nitrogen System. Manual and automatic isolation valves and a pressure transducer are contained in the electrically heated Receiver Station Valve Hotbox to maintain them at a stable temperature. The UF_6 piping between the Receiver Station Valve Hotbox and the Blending Receiver Station is heat traced.

F. Blending and Sampling Vent Subsystem

The Blending and Sampling Vent Subsystem consists of a UF_6 cold trap with its heating and cooling systems and a vacuum pump/chemical trap set. The Blending and Sampling Vent Subsystem serves both the Product Blending System and the Product Sampling System. The Blending and Sampling Vent Subsystem contains the following major components.

3.4.6.8 Criticality Safety

3.4.6.8.1 Product Cylinders

(Same as Section 3.4.4.8.1 for the Product System)~~Calculations were performed on infinite two-dimensional arrays of full 30B product cylinders. Inside each cylinder a region of UO_2F_2/water mixture was located. The remainder of the interior of the cylinder was assumed to be filled with 6.0 w/o-^{235}U enriched UF_6. Cylinders in the arrays were placed with the valve and base ends alternately in contact, so that the moderated region in a given cylinder was in the closest possible proximity to the moderated region in an adjacent cylinder. All cylinders were considered to be lying on a concrete pad one meter thick. Moderation was varied to obtain the optimum H/U ratio. Worst-case external reflection/moderation conditions were found by varying the density of the interstitial water between cylinders to simulate frost or snow. The calculation also assumed one cylinder above (touching) the array to simulate movement in/out/over the array.~~ LBDCR-10-0002

~~For the 30B cylinder, the condition that met the upper safety limit had an H/U ratio of 10.5 with an interstitial water density of 0.25 g/cm3 (15.6 lb/ft3). Thus, the maximum safe mass of hydrogen in each type product 30B cylinder in an array was determined to be 0.95 kg (2.09 lb) present in the form of 8.5 kg (18.7 lb) of water.~~

~~Criticality safety of 30B product cylinders depends on the control of moderator content. Criticality safety is achieved by ensuring that there is less than 0.95 kg (2.09 lb) of hydrogen present in a Type 30B cylinder.~~

~~The criticality safety calculations for the product blending system are identical to those for the product take-off system as presented in Section 3.4.4.8.1. No further criticality assessment is necessary for the product blending system under flooded conditions.~~

3.4.6.8.2 UF_6 Cold Trap

(Same as Section 3.4.4.8.2 for the Product System)~~Although the cold trap has a large internal volume it is individually safe by shape, the trap body having an internal diameter of 20.3 cm (8.0 in). This compares with the safe diameter of 21.9 cm (8.6 in) for 6.0 w/o enrichment. Individual cold traps are thus safe in isolation for any uranyl fluoride/water mixture. In practice the maximum H/U atom ratio in a cold trap will be 7; however, a sensitivity study is performed to determine the optimum H/U ratio, providing an additional margin of safety.~~

~~The cold trap has a minimum edge separation of 180 cm (70.9 in) from any other fixed plant vessels that can accumulate enriched uranium. The cold trap can thus be considered to be neutronically isolated from other fixed vessels.~~

~~According to the restrictions on movement of mobile vessels, one vessel can come into contact with a trap but any others have to be kept at 60 cm (23.6 in) separation.~~ LBDCR-10-0002

~~MONK8A (SA, 2001) calculations have been performed in which a vacuum cleaner is in contact with the cold trap, and another vessel (a 14 L (3.7 gal) product vent vacuum pump) is at 60 cm (23.6 in) edge spacing from the cold trap. These are typical of Separation Plant mobile vessels. Each mobile vessel was modeled with the appropriate uranic fill; the vacuum cleaner was filled with uranyl fluoride/water mixture with optimum moderation (H/U=12), and the vacuum pump (conservatively containing hydrocarbon oil) was filled with uranic breakdown of composition UF4-10.5CH2. The resulting k_{eff} = 0.8229 shows a slight increase in reactivity with respect to the isolated cold trap using the same conservative assumptions. The vacuum cleaner was assumed to have an internal diameter of 20.3 cm (8.0 in) and length 66 cm (26.0 in) and was assumed to be entirely filled with uranic material with an enrichment of 6.0 $^{w}/_{o}$. MONK8A (SA, 2001) calculations have been carried out for an isolated cylinder using these dimensions, filled with uranyl fluoride/water at optimum moderation and with 2.5 cm (0.984 in) water reflection. This gave a value for k_{eff} of 0.8037. The vacuum cleaner has HEPA filtration on the exhaust, and will be dedicated for cleaning operations where uranic material is involved and will be marked clearly.~~ LBDCR-10-0002

~~Additionally, calculations were performed in which it was assumed that there are no movement controls, and both the vacuum cleaner and pump were in contact with the cold trap. Even with 2.5 cm (0.984 in) spurious water reflection placed around each unit, and at enrichment of 6.0 $^{w}/_{o}$, the result remained substantially subcritical with k_{eff} = 0.8673.~~

~~The cold trap has therefore been determined to be safe both in isolation and while interacting with other fixed plant or vessels in movement for ^{235}U enrichments up to 6.0 $^{w}/_{o}$.~~

3.4.6.8.3 Vacuum Pump / Chemical Trap Set

(Same as Section 3.4.4.8.3 for the Product System)~~These chemical traps of the Blending and Sampling Vent Subsystem are individually safe by diameter (20.3 cm (8.0 in) compared with the safe diameter of 21.9 cm (8.6 in) calculated for 6.0 $^{w}/_{o}$ enrichment). However, calculations have been performed concerning the effect of possible neutron interaction with nearby (uranium bearing) equipment.~~

~~In the MONK8A (SA, 2001) calculations, the traps were both assumed to fill entirely with uranyl fluoride/water with no restriction on water content. This is conservative, as in practice the H/U ratio of the uranyl fluoride in the traps will have a limiting upper value of 7. Also, the space within the trap, which would normally be occupied by carbon or alumina, is modeled as being filled with uranic material. This maximizes the mass of fissile material within the traps and provides added conservatism. The pump, alumina traps, oil trap and exhaust filter are assumed to be filled with uranyl fluoride/water of unlimited water content. This is conservative, as virtually no uranium is expected in these components.~~ LBDCR-10-0002

~~Calculations were performed to account for interaction with other vessels in movement. According to the restrictions on movement, one mobile vessel can come into contact with one of the fixed chemical absorber traps, but other mobile vessels are assumed to be at 60 cm (23.6 in) separation. The case modeled was for a vacuum cleaner (of diameter 20.3 cm (8.0 in) and length 66 cm (26.0 in)) to be brought into contact with the vacuum pump in the product vent array. One other item, a 14 L (3.7 gal) rotary vane pump, was placed at 60 cm (23.6 in) edge spacing from the vacuum cleaner. The vacuum cleaner was assumed to have an internal diameter of 20.3 cm (8.0 in) and length 66 cm (26.0 in) and was assumed to be entirely filled with uranic material with an enrichment of 6.0 $^{w}/_{e}$. MONK8A (SA, 2001) calculations have been carried out for an isolated cylinder using these dimensions, filled with uranyl fluoride/water at optimum moderation and with 2.5 cm (0.984 in) water reflection. This gave a value for k_{eff} of 0.8037. The vacuum cleaner has HEPA filtration on the exhaust, and will be dedicated for cleaning operations where uranic material is involved and will be marked clearly.~~

LBDCR-10-0002

~~The MONK8A (SA, 2001) calculation for the worst case, where all vessels were assumed to be entirely filled with uranyl fluoride/water mixture at optimum moderation, a trap and a vacuum cleaner are in contact with the fixed pump, and the pump volume is 14 L (3.7 gal), yields a k_{eff} = 0.9328.~~

~~It should be noted that the above MONK8A (SA, 2001) model represents extreme accident conditions in terms of uranium accumulation and moderator ingress. It should also be noted that the simple MONK8A (SA, 2001) model used for the vacuum pump in all of the calculations is conservative. Since the real shape of the internal free volume is far from optimum, an explicit model of the pump is expected to result in a significant reduction in k_{eff}.~~

~~The vacuum pump/chemical trap set has been shown to be safe under normal operating conditions and credible abnormal operating conditions, for ^{235}U enrichments up to 6.0 $^{w}/_{e}$.~~

3.4.7 *(See SAR § 12.1.2.6~~4.2.7~~)* Product Liquid Sampling System

LBDCR-10-0033

3.4.7.1 Functional Description

The primary function of the Product Liquid Sampling System is to provide a means to validate the precise mean concentration of uranium-235 (^{235}U) and the purity of uranium hexafluoride (UF_6) in the product by taking homogenized liquid UF_6 samples from each product cylinder (Ref. Figure 3.4-13, Process Flow Diagram Product Liquid Sampling System). All product cylinders are sampled prior to being released for shipment to the customer.

The sampling process is carried out with UF_6 in the liquid state. At ambient temperature, the product in the 30B cylinders is in solid form when the cylinders are placed in the autoclave. Heating the cylinders in the autoclave transposes the UF_6 from the solid phase to the liquid phase. Once in the liquid phase, the cylinder is held at temperature for a sufficient period of time to assure homogenization. After homogenizing, the autoclave is tilted to pour the liquid into the sampling manifold and then into the sample bottles.

In the liquid phase, the pressure in the product cylinders is above atmospheric. The autoclaves provide a secondary confinement barrier and protection in the event a cylinder or sampling manifold should leak.

The system is shown in Figure 3.4-13, Process Flow Diagram Product Liquid Sampling System.

3.4.7.3 Design Description

The design bases and specifications are given in Table 3.4-10, Product Liquid Sampling System Design Basis. Applicable codes and standards are given in Table 3.4-11, Product Liquid Sampling System Codes and Standards.

There are ~~four~~three Liquid Product Sampling Autoclaves at the NEF with one allocated to process flexibility, maintenance, etc. | LBDCR-10-0036

The Product Liquid Sampling System consists of autoclaves that liquefy and homogenize the UF_6 contained in international 30B cylinders. This process is accomplished by passing hot air over the cylinders at a controlled rate.

For normal operation, a filled 30B product cylinder is loaded into an autoclave by rail from the cylinder transporter, and secured by clamps to prevent movement when the autoclave is tilted.

The sampling manifold is connected to the cylinder valve and secured to the cylinder skirt. The manifold is then connected to the Blending and Sampling Vent Subsystem. It is purged with nitrogen and pressure tested, and then evacuated and vacuum tested. With the manifold evacuated, the vent system is disconnected and the cylinder valve is opened by hand. The cylinder valve is verified as open and not blocked, and the cylinder starting pressure is verified as suitable to continue. Then the manual actuator used to close the cylinder valve is connected to allow the valve to be closed from the outside of the autoclave. The manual actuators for the sample bottle valves are also connected.

The autoclave door is then closed and locked.

The autoclave is pressurized at ambient temperature to approximately 1,200 mbar (17.4 psia) absolute pressure with nitrogen. This assures a slight pressure (above atmospheric) still exists at the end of the sampling cycle, following cooling. The positive pressure allows the autoclave to vent and ensures some gas flow to the HF monitor located in the line to the Pumped Extract GEVS.

The autoclave is then tilted to the –2° position to reduce the potential for splash over of UF_6 into the manifold during heat-up. The electric heaters and fan are then actuated and the internal temperature in the autoclave is brought up to operating temperature.

Hot air forced over the cylinder raises the UF_6 temperature to change the solid UF_6 to liquid. When the measured UF_6 pressure reaches its control set point and the cylinder contents are in equilibrium, the temperature set point remains steady.

When the pressure set point of 2.5 bar (36.3 psia) is reached, the autoclave maintains the pressure and temperature so the UF_6 can homogenize. This homogenizing period lasts for approximately 16 hours.

After homogenization, the sampling procedure begins. With the sample bottles closed, the heater controller is changed over to temperature control and the set point for the air temperature is elevated slightly. Due to the much smaller mass of the sample manifold compared to the cylinder, the sample manifold will heat up quicker than the cylinder. Any liquid UF_6 within the sample manifold piping vaporizes and flows back into the cylinder and condenses.

Two timers provide for monitoring the autoclave to maintain safe start-up of the heating cycle. The value of these two timers is made to enable monitoring of the autoclave pressure rise during the start of the heating cycle verses time. The autoclave pressure is compared to an algorithm during the first phase of the heating stage when the heating is carried out with a preset air temperature. If the pressure rise conforms to the algorithm, the heating is permitted to advance to a second phase where the heating is controlled by the cylinder pressure. In the event the algorithm is not being met, the heating cycle is aborted.

Two other timers operate to monitor the quality of the air space in the autoclave and support the operation of the internal HF monitor. After the system stabilizes, the autoclave air pressure and temperature are compared. A departure from the anticipated pressure to temperature ratio indicates a leak has occurred. A lower than anticipated pressure to temperature ratio indicates a pressure leak from the secondary containment (autoclave). A higher than anticipated ratio indicates a leakage of UF_6 into the secondary containment. If the pressure/temperature ratio is outside the anticipated range, the cycle is aborted.

Another timer is used to confirm that the cooling cycle is continued for a sufficient time to ensure the cylinder contents are solidified before the cylinder is removed from the autoclave.

A final timer ensures that the autoclave is fully vented before the autoclave door is opened.

B. Blending and Sampling Vent Subsystem.

The instrumentation for the Blending and Sampling Vent Subsystem equipment is discussed in Section 3.4.6, Product Blending System.

3.4.7.8 Criticality Safety

LBDCR-10-0012

Table 3.7-10 provides the safe-by-design components used for the Product Liquid Sampling System. Criticality safety for these items is bounded by similar or identical items provided for the Product System. No additional calculations are necessary.

3.4.8 (*See SAR § 12.1.2.7~~4.2.8~~*) Contingency Dump System

LBDCR-10-0033

3.4.8.1 Functional Description

The Contingency Dump System (Ref. Figure 3.4-15, Process Flow Diagram Contingency Dump System) provides an exhaust route for UF_6 from the cascade in the event of the cascade operating outside of its design envelope. The Contingency Dump System also provides an evacuation route for UF_6 and light gases to allow the centrifuges to be safely run down to rest.

~~The Contingency Dump System forms only part of the dumping philosophy.~~ Dumping of the UF_6 from the cascade, should the need arise, will take place by first choice to the Tails Take-off System. If the Tails Take-off System becomes unavailable, the ~~Contingency Dump System is~~NaF traps are used. The Contingency Dump System is designed to operate in one of two principal operating modes, passive evacuation or active evacuation. The function of the passive evacuation mode is to trap the UF_6 evacuated from the cascade in the sodium fluoride (NaF) traps. This "passive evacuation" is so called because evacuation of the cascade can initially take place without actively pumping; the low pressure maintained in the NaF traps and buffer volume in standby mode facilitates this process. Operation in the passive evacuation mode results in a progressive increase in the operating pressure at the NaF traps due to the accumulation of light gas in the buffer volume. This light gas is removed from the buffer volume by operation in the active evacuation mode. In "active evacuation" the buffer volume is opened to the vacuum pump/chemical trap set and the light gas is exhausted from the passive system via the carbon and aluminum oxide traps to the Pumped Extract GEVS. LBDCR-10-0037 LBDCR-10-0037

3.4.8.2 Major Components

The major Contingency Dump System components are listed below.

A. Contingency Dump System NaF Traps and Buffer Volume.

A pressure transducer is located on the cascade header to monitor conditions at the cascade header during dump. This transducer is dedicated to the Dump Control System and provides an indication of cascade conditions during dump.

The Contingency Dump System uses three chemical traps (Ref. Figure 3.4-16, NaF Trap Equipment Drawing) filled with sodium fluoride (NaF). This material is able to adsorb UF_6 and HF without producing gaseous reaction products. The buffer volume provided after the NaF traps accommodates any light gas that passes through the NaF traps. The NaF traps and buffer volume constitute the "passive" part of the Contingency Dump System. This passive part of the Contingency Dump System is able to maintain a dump capacity in the event of a loss of other services or utilities.

Automatic valves are provided for plant operation. Pressure transducers are positioned in the Contingency Dump System to monitor both the buffer volume pressure and dump pump suction pressure. This monitoring is for both the operation and protection of the Contingency Dump System and the prevention of backflow of light gases through the NaF traps to the Cascade System.

A fourth pressure transducer is mounted at the cascade valve frame between the automatic and manual valve to enable monitoring of the seating efficiency of these two valves. A tight shut-off of the valve must be maintained throughout the life of the Contingency Dump System to prevent the NaF traps becoming loaded with UF_6. A tight shut-off valve is required to enable maintenance of the Contingency Dump System.

B. Contingency Dump System Vacuum Pump/Chemical Trap Set.

The Contingency Dump System Vacuum Pump/Chemical Trap Set major components are:

- A roots type and rotary vane vacuum pump

- A mixed-bed activated carbon and aluminum oxide trap

The NaF traps and buffer volume of the passive dump system are backed by the Contingency Dump System Vacuum Pump/Chemical Trap Set which comprises, in order, a Roots type vacuum pump, mixed-bed (activated carbon and~~trap,~~ aluminum oxide (Al_2O_3)) traps and sliding vane type vacuum pump with an aluminum oxide oil trap on the pump suction and a mechanical oil trap (exhaust filter) on the pump discharge. The sliding vane vacuum pump discharges ~~through a final oil trap~~ into the Pumped Extract GEVS. Connection of the Contingency Dump System vacuum pump/chemical trap set is made to the NaF traps/buffer volume of the Contingency Dump System by flexible stainless steel vacuum bellows and to the Pumped Extract GEVS by a pressure hose. The equipment is assembled as a modular package to facilitate easy replacement and maintenance of the unit as a whole in the event of a failure. LBDCR-09-0110

The function of the activated carbon in the mixed bed trap is to remove small traces of UF_6 and the aluminum oxide ~~trap~~ is to remove any HF from the gas flow. The oil traps prevent oil migration both upstream and into the Pumped Extract GEVS~~These traps are fitted upstream of the sliding vane vacuum pump. A second, smaller, aluminum oxide trap, is fitted immediately before the sliding vane vacuum pump. This trap prevents back diffusion of oil from the vacuum pump into the traps. The pump discharge trap prevents oil entering the Pumped Extract GEVS~~. LBDCR-09-0110

To maintain a high availability of the Contingency Dump System, power supply to the Contingency Dump System pumps is maintained by standby diesel generators in the event of a failure of the normal power supply. Each cascade has one Contingency Dump System ~~with no installed redundancy~~that directs a cascade dump either to the Tails LTTS or the NaF traps. LBDCR-10-0037

3.4.8.3 Design Description

The design bases and specifications are given in Table 3.4-12, Contingency Dump System Design Basis. Applicable codes and standards are given in Table 3.4-13, Contingency Dump System Codes and Standards.

An independent Contingency Dump System is provided for each cascade. All components of the Contingency Dump System operate a subatmospheric pressure. Release of UF_6 or light gases is minimized because leakage, if it were to occur, would be inward to the system.

All of the process equipment in the Contingency Dump System is designed, constructed, and operated using good engineering practice and in accordance with the LES Quality Assurance program.

The materials of construction, corrosion allowances and fabrication specifications for the equipment and piping used in the Contingency Dump System are compatible with UF_6 and HF at the operating conditions and have been proven by extensive use in existing enrichment plants.

3.4.8.4 Interfaces

The Contingency Dump System interfaces with the following systems and utilities:

A. Cascade System

B. Pumped Extract GEVS

C. Nitrogen System

D. Compressed Air System

E. Electrical System

F. Plant Control System.

G. Tails Take-off System

LBDCR-10-0037

3.4.8.5 Design and Safety Features

This system is designed and constructed to provide safe operation for plant personnel as well as the general public. Principal design features are as follows:

A. All piping, vessels and pumps in the Contingency Dump System operate at subatmospheric UF_6 pressure.

B. Piping is all welded construction and process valves are bellow sealed.

C. Before carrying out any disconnections or connections of equipment, the piping is evacuated and nitrogen purged. Flexible exhaust hoses connected to the Pumped Extract GEVS via a temporary local extract cross-connection, during initial plant operations, remove any releases from the work area.

D. Before discharge to the Pumped Extract GEVS, all gases flow across activated carbon and aluminum oxide to remove any traces of UF_6 and HF via the Contingency Dump System Vacuum Pump/Chemical Trap Set.

E. Monitoring of fill level of NaF trap when charging the NaF trap.

F. Hydrocarbon lubricants are not used. The rotary vane vacuum pumps are lubricated with perfluorinated polyether (PFPE) oil, a fully fluorinated synthetic oil.

G. The potential for capture of UF_6 and HF in the NaF traps is maximized by operation of the Contingency Dump System in a passive mode. In passive evacuation mode the flow of UF_6 from the cascade is restricted to the NaF traps and buffer volume by valving.

H. The main electrical supply is supported by a Standby Diesel Generator System for electrical services essential to equipment protection. In the case of a power failure the UF_6 valves will retain their position because their control is via a 24 VDC uninterruptible power supply (UPS). On loss of the UPS the valves will revert to a fail-safe position.

I. Compressed air has a high reliability in normal operation with sufficient capacity at the pressure reservoir for a safe shut down. To protect against a compressed air failure, all air driven valves are fitted with check valves to ensure that the valve retains a position of at least 50% for six hours.

J. ~~The potential for a criticality arising at the Contingency Dump System is eliminated by ensuring a safe design. Both the NaF traps and the buffer volume are designed and installed to be geometrically safe.~~The potential for a criticality arising in the systems and components associated with a cascade dump (e.g., Tails LTTS, 48Y cylinder, NaF traps buffer volume, piping, etc.) is prevented by controlling the maximum enrichment of the cascade through the use of IROFSC6, which in turn limits the upper bound for the average enrichment of the assay (1.5%). The systems and components associated with a cascade dump are bounded by this average cascade enrichment and the criticality safety approvals for the items are granted based on 1.5% ^{235}U. LBDCR-10-0037

~~K. Weight in the contingency dump vent vacuum dump/chemical trap set carbon trap is monitored and a trip on weight stops the contingency dump vent vacuum pump.~~ LBDCR-09-0110

3.4.8.6 Operating Limits

The Contingency Dump System must be able to remove the UF_6 content of the cascade and evacuate to a minimum pressure during abnormal operating conditions.

3.4.8.7 Instrumentation

The cascade protection system is provided by two Programmable Logic Controllers (PLCs), one PLC controlling and protecting the process while the other PLC monitors parameters essential to the separation process and takes action if these parameters are out of specification. In the event of a failure of either of the PLCs, the failure will invoke a cascade dump.

The Contingency Dump System process variables such as pressures and valve positions are displayed in the Control Room and are automatically controlled by the Contingency Dump System Local Control Center (LCC). Deviations from the specified values are detected and indicated via two-tiers of signals. At the first level the signal provides an alarm only and the process operator has the ability to manipulate the process to restore it to normal operation. At the second alarm/trip level, automatic action is taken to provide system protection.

The pressure transducers and valve and pump status signals of the Contingency Dump System are directly connected to the control PLC in the Contingency Dump System LCC.

The dump system has two distinct modes of operation, in the normal state the Contingency Dump System is in standby mode. In the event of a "dump" signal the "dump" mode control and action set-points will override the trips and alarms of the standby mode where these set-points are different.

The system is placed in Dump Mode either automatically by a dump demand signal from the cascade control and protection system or can be manually selected either by a push button in the Control Room (Cascade Hall Dump) or from the Plant Control System (Cascade Dump).

A. Contingency Dump System NaF Traps and Buffer Volume.

The NaF traps and buffer volume comprise the passive part of the Contingency Dump System.

The Contingency Dump System pressure is monitored at two positions at the traps and buffer volume. The first position is at the buffer volume upstream of the automatic shut off valve. The second position is downstream of the shut-off valve and monitors the vacuum pump suction line pressure.

The passive dump system operating pressure at the NaF traps and buffer volume is maintained within the range high (H1) to low (L) while the system is in the Standby mode.

Pressure control maintains the pressure at the NaF traps and buffer volume by opening the downstream valve on rising pressure (H1) and closing the valve on falling pressure (L).

A high alarm (H2) at the NaF traps indicates an alarm in the event of the buffer volume pressure rising above its normal operating range in standby mode. A high-high alarm (HH) inhibits the use of the Contingency Dump System by removing the "dump system available" signal to the cascade protection system.

Pressure indication downstream of the automatic valve provides a safety and monitoring function. In the event of a high-high pressure an alarm/trip (HH2) inhibits the use of the active evacuation sequence and will close the valve. The HH2 alarm/trip is active during all standby and dump operating modes of the Contingency Dump System. In "dump" mode the HH2 alarm/trip is overridden in "light gas evacuation" mode only by alarm/trip HH1. Operation of the HH1 alarm/trip will close the valves downstream of the buffer vessel and the active evacuation valve. The low set point of the HH1 trip provides a more rapid response to a fault condition and air ingress at the lower operating pressures of the Contingency Dump System when in light gas evacuation mode.

On dump instruction the Contingency Dump System status is promoted from "Standby" to "Passive Evacuation" and UF_6 and light gas enters the Contingency Dump System from the cascade under the control of the Contingency Dump System. The buffer volume pressure indicator/controller high trip, (H3), is made active overriding the lower trip points to permit light gas passing the NaF traps to fill the buffer volume.

The time T1 is started on dump demand. Time T1 retains the Contingency Dump System in "passive evacuation" for the set period.

B. Contingency Dump System Vacuum Pump/Chemical Trap Set.

On timeout of the timer T1 or a low pressure trip at the cascade header pressure the dump sequence is promoted to "Active Evacuation," the valve down stream of the buffer volume is opened and time T2 is started. During "Active Evacuation" the Contingency Dump System pump module is used to evacuate the accumulating light gases from the buffer volume via the downstream valve. On timeout of timer T2 the Contingency Dump System enters "Light Gas Evacuation" and the cascade is evacuated through the NaF trap bypass line.

A temperature alarm is fitted to the ~~activated carbon~~mixed bed trap to provide indication of an excessive carry over of UF_6 gas from the NaF traps and buffer volume when in "Active Evacuation" or directly from the cascade when operating in "Light Gas Evacuation." The temperature alarm provides an alarm function only on excessive UF_6 gas flow at the ~~activated carbon~~ trap. ~~The carbon trap also has a weigh system. In addition to local weight display, this system will shut down the vacuum pump when the high weight set point is reached.~~ LBDCR-09-0110 LBDCR-09-0110

The Contingency Dump System interfaces with the Cascade System to provide the Control Room operator with cascade data in the event of a failure in the cascade control PLC.

The following cascade status conditions are monitored by the Contingency Dump System PLC:

A. The position of the cascade dump valve (open/closed)

B. Recipient temperature

C. Cascade header pressure.

The Contingency Dump System monitors the pressure of the cascade header by a single pressure transducer. This pressure transducer is used in conjunction with pressure control at the Contingency Dump System buffer volume to determine the availability of the Contingency Dump System. Contingency Dump System availability is maximized over the whole of the cascade run-down by a two stage monitoring of the cascade header pressure.

Due to the anticipated infrequent use of the Contingency Dump System, its availability is maintained by a regular testing program of both monitoring equipment and valves to ensure that a failure of the Contingency Dump System PLC is revealed.

3.4.8.8 Criticality Safety

3.4.8.8.1 Contigency Dump System NaF Traps

LBDCR-10-0012

The average enrichment of the UF_6 being dumped from a cascade depends on the product and tails enrichments. Within the ranges of product enrichment up to 5.0 $^{w}/_{o}$ ^{235}U and tails depletion to 0.34 $^{w}/_{o}$ ^{235}U, the average enrichment of the UF_6 being dumped is always less than 1.5 $^{w}/_{o}$ ^{235}U. Based on this, the contingency dump traps ~~will be~~are analyzed at an enrichment of 1.5 $^{w}/_{o}$ rather than 6.0 $^{w}/_{o}$. The contingency dump traps are sodium fluoride traps with an ~~inside~~ outer diameter of approximately 54 cm (21.3 in). Each cascade has an independent contingency dump system ~~with three NaF Traps~~ that can either discharge to a designated Tails LTTS or to the three NaF Traps for that cascade.

LBDCR-10-0037

MONK8A (SA, 2001) calculations ~~have been~~were carried out first for ~~an isolated trap~~the three NaF traps at their normal positions with 2.5 cm (0.984 in) of water reflection around the trap body. The calculations considered the cases with and without the associated piping to demonstrate the inconsequential effect of the piping on k_{eff}. The model assumed that adsorbed UF_6 within the trap is ~~converted to $UO_2F_2 \cdot 3.5H2O$, i.e., the accident condition with air inleakage~~wet uranyl fluoride at optimum moderation. The uranium enrichment was 1.5 $^{w}/_{o}$ ^{235}U. The value of k_{eff} obtained was ~~0.6466~~substantially below 0.95. The model represents a UF_6 loading in the entire volume of trap with no credit for the presence of the trap material (NaF). ~~of approximately 220 kg (485 lb), which~~This loading would require many dumps to achieve. Contingency dump traps are thus intrinsically safe by a very large margin.

LBDCR-10-0012

Considering interaction and movement between the three closely spaced traps, criticality safety is demonstrated ~~by comparison~~ with the MONK8A (SA, 2001) calculations ~~for storage of contingency dump traps in unspaced linear arrays~~. The calculation modeled ~~a linear array of seven~~ three touching ~~dump~~ NaF traps in a close triangular arrangement as the most reactive configuration ~~with three other vessels at 60 cm (23.6 in) spacing from the array (a residue container, a vacuum cleaner cylinder and a UF_6 pump unit)~~. For interaction, a 7 L vacuum cleaner approved for cleaning operations was placed in contact with the traps. The vacuum cleaner was filled with wet uranyl fluoride at 6% enrichment and optimum moderation with 2.5 cm of water reflection rather than 1.5% used for the contingency dump system. The resulting K_{eff} is less than the limit of 0.95, demonstrating that the configuration would remain safe as a result of movement due to a seismic or tornado missile event. ~~An additional dump trap was also placed in contact with the center trap of the linear array. The value of k_{eff} obtained was 0.8537. The modeled arrangement is more conservative than three spaced traps interacting with the same mobile vessels and it can be concluded that contingency dump traps are safe when interacting with any mobile vessels that are likely to be present. The vacuum cleaner was assumed to be a vacuum cleaner of internal diameter 20.3 cm (8.0 in) and length 66 cm (26.0 in) and to be entirely filled with uranic material with an enrichment of 6.0 $^{w}/_{o}$. MONK8A (SA, 2001) calculations have been carried out for an isolated cylinder using these dimensions, filled with uranyl fluoride/water at optimum moderation and with 2.5 cm (0.984 in) water reflection. This gave a value for k_{eff} of 0.8037. The vacuum cleaner has HEPA filtration on the exhaust. The Vacuum Cleaner will be dedicated for cleaning operations where uranic material is involved and will be marked clearly.~~ LBDCR-10-0012

The UF_6 containing components for the contingency dump system are located on the second floor of the SBM, and therefore, not impacted by flooding. The safe condition described above for the contingency dump system remains valid under flooded conditions.

3.4.8.8.2 Contingency Dump Vacuum Pump and Chemical Trap Set

The Contingency Dump Vacuum Pump and Trap Set is a system that has similarities to the pump and trap sets in the UF_6 Handling Area (tails evacuation, product, feed, etc). The set is part of the active evacuation of the contingency dump system. The components of the pump/trap set consists of manual isolation valves, a roots vacuum pump (Leybold WS251), mixed bed chemical trap, a rotary vane vacuum pump (Oerlikon Leybold TRIVAC D40BCS), an Al_2O_3 oil adsorption filter and an exhaust filter with oil return. The items on the Pump and Trap Set are safe-by-design individually. The Pump and Trap Set as a whole is safe-by-design by physical arrangement as demonstrated in a nuclear criticality safety evaluation through comparison to a bounding calculation performed for the product vent vacuum pump/chemical trap set described in Section 3.4.4.8.3. LBDCR-10-0012

3.4.8.8.3 Assay Dump to a Tails Cylinder

Upon activation of the contingency dump, the preferred evacuation route is to the tails cylinders. The contingency dump removes all UF_6 from the cascade halls thus mixing the feed, tails, and product material to have an upper-limit average enrichment of 1.5%.

The components involved in the removal of UF_6 are the associated piping, low temperature take-off stations (LTTS), and 48Y cylinders.

The model conservatively assumed that only one LTTS was available and all material was evacuated into that tails cylinder. Additionally, the material was conservatively assumed to be greater than the quantity within the cascades and associated piping. The MONK8A (SA, 2001) model provides a bounding analysis consisting of a generic geometry to create conservative conditions. This material from the cascades was assumed to be optimally moderated at an H/U ratio of 7 as a sphere. This sphere was further encased by unmoderated UF_6 at a maximum theoretical density to increase the reflection of the system. To account for spurious reflection, a 2.5 cm of water wrapped the outer sphere. The system did not consider neutron interaction due to the location and isolation of the cylinders within the LTTS. The MONK8A (SA, 2001) result was well within the sub-critical limit of 0.95, based on an average enrichment of 1.5% as for the Contingency Dump System. LBDCR-10-0023

3.4.9 (*See SAR § 12.1.2.~~84.2.9~~*) Gaseous Effluent Vent Systems (GEVS) LBDCR-10-0033

Note: The Heating Ventilation and Air Conditioning (HVAC) systems and GEVS for the NEF are undergoing redesign. After these design changes are finalized the information in Section 3.5.1 (Building Ventilation),, Section 3.4.9 (Gaseous Effluent Vent Systems), and other sections that reference GEVS will be revised as necessary and in accordance with 10 CFR 70.72. The final design will be evaluated in accordance with the requirements of 10 CFR 70.72 prior to requirements for operational readiness.

The function of the GEVS is to remove particulates containing uranium, and HF from potentially contaminated process gas streams. Prefilters and HEPA filters remove particulates and impregnated activated carbon filters are used for the removal of any HF. The systems produce solid wastes from the periodic replacement of prefilters, absolute filters, and chemical filters. The systems produce no gaseous effluents of their own, but discharge effluents from other systems after treatment to remove hazardous materials.

There are two GEVSs for the plant. The Pumped Extract GEVS and the CRDB GEVS. Applicable codes and standards are given in Table 3.4-14, Gaseous Effluent Vent System Codes and Standards.

3.4.9.1 Pumped Extract GEVS

The Pumped Extract GEVS, a Safe-By-Design system, provides exhaust of potentially hazardous contaminants from the SBMs from all permanently connected vacuum pump and trap sets, as well as temporary connections used by maintenance and sampling rigs.

The Pumped Extract GEVS serving the SBMs is located in theUF_6 Handling Area of SBM-1001. The system is ~~operated~~ monitored from the Control Room.

3.4.9.1.1 Functional Description

The Pumped Extract GEVS interfaces with the following systems, auxiliary activities, and utilities:

A. UF_6 Feed System

B. Product Take-off System

C. Tails Take-off System

D. Product Blending System

E. Product Liquid Sampling System

F. Contingency Dump System

G. Assay Sampling System

H. Electrical System

I. Plant Control System

J. Cascade Mobile Evacuation System

K. Cascade Mobile Sampling System

L. On-Line Mass Spectrometer System (No HF and UF6 hazard exist. To support the connection of on-line mass spectrometer standards, a mobile pump and trap set may be used. One time use.) LBDCR-10-0046

M. Short Break Load System (Standby Diesel Generators)

N. No Break System (UPS)

O. Alpha Monitors

P. HF Monitors

Q. Liquid Sampling Autoclaves

The design requirements provide a large safety margin between normal and accident conditions so that no single failure could result in the release of significant hazardous material. The amounts of UF_6 in the system also preclude the release of significant quantities of hazardous material from a single failure or multiple failures. Instrumentation is provided to detect abnormal process conditions so that the process can be returned to normal automatically or by operator actions.

3.4.9.1.2 Major Components

The Pumped Extract GEVS consists of the following major components.

A. Duct system

B. Prefilters

C. HEPA Filters

D. Impregnated activated carbon filters

E. Centrifugal fans

F. Monitoring and controls (HF) before and after filter trains (with temperature indicating alarms on carbon filters)

G. Automatically controlled inlet and outlet isolation dampers

H. Exhaust stack

I. Monitoring and controls (alpha and HF) in exhaust stack

J. Airflow monitors and airflow blender

3.4.9.1.3 Design Description

The design bases and specifications are given in Table 3.4-15, Pumped ExtractGEVS Design Bases.

The Pumped Extract GEVS, which is a Safe-By-Design system, serves the SBM. It consists of a pipe network that serves all of the permanently connected vacuum pump and trap sets as well as temporary connections used by maintenance and sampling rigs in the SBMs. The flexible exhaust hoses, connected to the Pumped Extract GEVS via a temporary local extract cross-connection, are used for cylinder connection/disconnection or maintenance procedures. A minimum target velocity of 7 m/s (1380 ft/min) will be established in the piping system to convey particulate contaminants through the piping and minimize settling. Each section of the pipe system has an orifice plate to maintain a minimum air velocity. The flexible exhaust hoses will have a capture velocity of 0.75 m/s (148 ft/min).

The Pumped Extract GEVS piping connects to an inlet header. Off the inlet header are two parallel trains each with eight banks of filters. Each train is capable of handling 100% of the effluent during normal operations. One train is online and the other is a standby. Each bank of filters consists of a60-65% efficient prefilter with removes dust and protects the HEPA filter, a 99.97% efficient HEPA filter which removes uranium aerosols (mainly UO_2F_2 particles), a 99% efficient activated carbon filter for removal of HF, a position for an optional additional filter, and a final 99.97% HEPA filter which removes carbon fines and any additional uranium aerosols. Manual dampers are also located at the inlet and outlet of each of the eight banks of filters for testing and to allow isolation of a bank while the unit continues to operate. Flow balancing orifices are provided on each bank to assure balances flows across each bank.

Each filter train vents the clean gases through a variable speed centrifugal fan, which maintains the negative pressure upstream of the filter train by using input from a differential pressure controller. Finally, the clean gases are discharged through a roof top exhaust stack on the SBM. One exhaust stack is common to the operational system and the standby system. A switch between the operational and standby systems (trains) can be made using automatically controlled dampers. There are motorized and manually controlled dampers located at the inlet and outlet of each train to allow for different modes of operation of the system. The design flow rate is estimated to be 646 m^3/hr (380 cfm).

The materials of construction, corrosion allowances, and fabrication specifications for the equipment and piping used in the GEVS are compatible with UF_6 and HF and are noncombustible.

The P~~U~~umped Extract GEVS provides the ventilation and hazardous contaminant removal for the following systems, equipment, and areas. | LBDCR-10-0046

It is connected via permanently ducted locations in the SBMs to:

A. The UF_6 Feed System, The Product Take-off System, the Tails Take-off System, the Product Blending and Sampling Vent Subsystem and Contingency Dump System.

B. All Liquid Sampling System autoclaves.

C. All discharge lines from mobile vacuum pump sets (To support the connection of on-line mass spectrometer standards, a mobile pump and trap set will be used to provide a local exhaust ventilation and no be connected to the Pumped Exhaust GEVs for a one time use). LBDCR-10-0046

It is connected via flexible exhaust hoses via a temporary local extract cross-connection, during initial plant operations, to places where piping is normally disconnected or equipment is opened, such as:

A. The Product Take-off System and Tails Take-off System pumping trains and the UF_6 Feed Purification Subsystem, Product Vent Subsystem, Tails Evacuation Subsystem and Product Blending and Sampling Vent Subsystem vacuum pump/ chemical trap sets.

B. The Liquid Sampling System autoclaves. The lines for the flexible duct are run to a point within approximately 0.9 m (3 ft) of each door opening. Approximately 1.8 m (6 ft) of flexible duct is connected to this point to enable access to all places where the autoclave UF_6 pipework is connected/disconnected.

C. The Product and Tails Low Temperature Take-off Stations.

D. The Solid Feed Stations and Feed Purification Low Temperature Take-off Stations.

E. The Blending Donor Stations and Blending Receiver Stations.

If the Pumped Extract GEVS stops operating, material within the piping ~~will not be~~ is not released into the building because each of the Pumped Extract GEVS connections is piped into the top of the header to prevent entrained material from falling back into the building from the piping during system failure. LBDCR-10-0002

Mobile vacuum pump units that vent to the Pumped Extract GEVS are available in the UF_6 Handling Areas and the Product Blending and Liquid Sampling Area.

3.4.9.1.4 Design and Safety Features

The Pumped ExtractGEVS is designed to protect plant personnel, the public, and the environment, against uranium and HF exposure. Potential hazards include the release of UF_6 and HF to the building and/or environment, contaminated filters, and contaminated oil.

The system filters contaminated gases, and continuously monitors exhaust gas flow to the atmosphere. HF monitors are installed upstream and downstream of the filtration systems and in the exhaust stack to detect the release of hazardous materials to the environment. Alpha monitors are installed in the exhaust stack to detect the release of hazardous materials. A fault alarm is generated, in the event of a fault occurring within any of the monitors. The alarms are monitored in the Control Room.

The inflow to the Pumped Extract GEVS from the vacuum pumps exhausts is first passed through pre-filters which remove dust and protect the HEPA filters, through HEPA filterswhich remove uranium aerosols (mainly UO_2F_2 particles), a position for an optional additional filterthrough carbon filters for removing HF, and finally through another set of HEPA filter for removal of carbon fines and any additional uranium aerosols. Upstream of the filter train there is an HF monitor that will alarm if the concentration of HF within the air being drawn into the filters exceeds a pre-determined level. This will provide assurance that accumulation of uranium in the filters is not occurring. The filters are equipped with differential pressure instruments that will alarm on any one filter and trip on any two filters in a filter train on blockage or build-up of material. The nuclear criticality safety analysis (NCSA) for the Pumped Extract GEVS was performed to demonstrate compliance with the subcriticality requirement with an approved margin using MONK 8A (SA, 2001) simulations. The NCSA considered two trains of the Pumped Extract GEVS arranged in an end-to-end configuration, and included neutronic interactions with interconnecting piping/ducting and exhaust fans. Each Pumped Extract GEVS train contains an eight-bank (or leg) system, each containing four filters and a spare canister, resulting in an 8 X 5 filter array per train in the criticality model.

Mobile equipment considered for additional neutron interactions included a 21 liter vacuum cleaner and a change filter for each GEVS train. The use of the 21 liter vacuum cleaners is conservative relative to the planned use of only 7 liter vacuum cleaners for maintenance activities. In addition, a linear array of seven product vent vacuum pump/chemical trap sets was placed in front of the GEVS array to conservatively bound the maximum possible number of these skids that could be present in the SBM at any time. This placement of multiple pump/trap sets in close proximity of the GEVS filter trains represents an extreme bounding condition for the criticality analysis.

The SBD approach assumed a conservative enrichment of 6% and every available volume in the system filled with optimally moderated wet uranyl fluoride material. Flooding of the system up to 60 cm was assessed as a function of water depth from the floor. Spurious reflection was represented by a layer of 2.5 cm of water around each individual component or part. These conditions result in a k_{eff} of 0.9498, which is safely subcritical with acceptable margin.

Note that the SBMs are not credited with protection against tornado missiles, although the walls and roof of SBM 1001, where the Pumped Extract GEVS resides, is designed to withstand tornado missiles with poured-in-place concrete. However, the doorways ~~will not be~~ are not missile resistant or have missile shields to protect the Pumped Extract GEVS inside the building. LBDCR-10-0002

The SBD features contain several inherent contingencies or conservatism such as: 6% U-235 enrichment; components or available volumes completely filled with enriched UO_2F_2/water mixture; optimum moderation and flooding; and no credit for component internal material. Loss of the SBD control due to an external event such as tornado missile strike during normal operation still requires multiple conditions to exist for enriched material in the components to have the potential for a criticality. There is a very low risk of inadvertent criticality at the facility following the tornado missile event on the basis of the following qualitative risk assessment:

- At the low licensed enrichment limit of 5.0% U-235, criticality requires moderation.
- Uranium will be dry/unmoderated throughout the entire enrichment process during normal operation (i.e., operations do not include solutions of 5.0% U-235).
- A sufficient mass for criticality can only accumulate through the reaction of uranium hexafluoride (UF_6) with moisture resulting from air in-leakage.

The CRDB GEVS provides ventilation and hazardous contaminant removal for the CRDB through ductwork, via hoods vented by booster fans to the technical services area, the chemical laboratory, and the vacuum pump rebuild workshop.

The materials of construction, corrosion allowances, and fabrication specifications for the equipment and ductwork used in the GEVS are compatible with UF_6 and HF and are noncombustible.

3.4.9.2.4 Design and Safety Features

The CRDB GEVS is designed to protect plant personnel against uranium and HF exposure.

The CRDB GEVS is designed to meet all applicable NRC requirements for public and plant personnel safety and effluent control and monitoring. The system design also complies with applicable standards of OSHA, EPA, and state and local agencies.

The system filters contaminated gases, and continuously monitoring exhaust gas flow to the atmosphere. HF monitors and alarms are installed upstream and downstream of the filtration systems and in the exhaust stack to detect the release of hazardous materials to the environment. The alarms are monitored in the Separation Plant Control Room.

The CRDB GEVS provides for continuous monitoring and periodic sampling of the gaseous effluent in the exhaust stack in accordance with the guidance in Regulatory Guide 4.16.

Gamma monitors measure the build-up of ^{235}U on prefilters and HEPA filter. Upon detection of high-high gamma levels in the CRDB GEVS filter, the CRDB GEVS trips.

The unit is located in a dedicated room in the CRDB . The filters are bag-in/bag-out. The carbon filter will be sampled and the absorption capacity checked per laboratory analysis. Filter replacement will be based on the remaining absorption capacity. The remaining filters will be replaced based on differential pressure (i.e., filter loading). There is no fixed frequency for filter replacement.

If the CRDB GEVS stops operating, material within the duct ~~will not be~~ is not released into the building because each of the CRDB GEVS connections has a P-trap to catch entrained material that could otherwise fall back into the building from the ductwork during system failure. LBDCR-10-0002

Before pumps enter the CRDB Contaminated Workshop there is a requirement for them to be de-gassed prior to transfer. It would be unusual for pumps to enter the facility with significant quantities of UF_6 remaining within the pump, including UF_6 dissolved in the PFPE oil. On entering the facility the pumps are taken to the outgas area where the oil is removed. If dissolved UF_6 were present in the oil then there would be some fuming this would mainly be as a result of the dissolution of the UF_6 from the oil reacting with the water in the air. This would produce UO_2F_2 and HF. The HF would be drawn into the CRDB GEVS and the majority of the UO_2F_2 would remain with the oil. The number of product pumps that cannot be successfully de-gassed is small and it is not considered that a significant fraction of the uranium in the oil would enter the CRDB GEVS. Once the pumps have been transferred to the hydraulic table there will be uranium associated with the residual oil in the pump and some in the form of dry breakdown products. It is not considered possible that significant quantities of these will become airborne during the cleaning operations.

For the activities in the CRDB, the accumulation rate of uranium in the CRDB GEVS is very low compared with the safe mass of 12.2 kg U (26.5 lb U) assuming double batching and all the uranium were enriched to 6.0 $^{w}/_{o}$. These low accumulations coupled with regular sampling of filters, the weight trips and temperature trips, render a criticality accident highly unlikely.

3.4.10 Centrifuge Test and Centrifuge Post Mortem Processes

This section describes the basic components, functional requirements, and utilities required for operation of the Centrifuge Test Facility (CTF) and Centrifuge Post Mortem Facility (PMF). The CTF and PMF are located in the Centrifuge Assembly Building (CAB) as shown in Figure 3.3-10, Centrifuge Assembly Building, First Floor. Although ~~T~~these two facilities share a ~~v~~single room within the CAB ~~although~~, the allocated space for each operation is somewhat segregated and effectively treated as separate facilities. The sensitive operations undertaken within the facilities require access control for cleared personnel only. Criticality is not credible in these areas due to limits placed in the amount of ^{235}U allowed within this area. The functional requirements for the Centrifuge Test Facility and the Centrifuge Post Mortem Facility are presented in Table 3.4-17, Functional Requirements for Centrifuge Test and Post Mortem Facilities. Utility requirements for the two facilities are presented in Table 3.4-18, Utility Requirements for Centrifuge Test and Post Mortem Facilities. LBDCR-10-0012

3.4.10.1 Centrifuge Test Facility

3.4.10.1.1 Functional Description

The principal functions of the Centrifuge Test Facility (CTF) are to provide a means of functionally testing the performance of production centrifuges to ensure compliance with design parameters and to investigate production and operational problems. Testing can be performed on either a single centrifuge or two simultaneously.

Testing in the CTF is performed by feeding a stream of gaseous UF_6 into the centrifuge and removing enriched and depleted streams, Product and Tails, respectively. During this process, the centrifuge is maintained at the required operating frequency, temperature, and pressure, and samples are taken from the Product and Tails streams to enable determination of the separative capacity of the centrifuge under test.

The materials of construction, corrosion allowances, and fabrication specifications for the equipment and ductwork used in the Exhaust Filtration System are compatible with UF_6 and HF and are noncombustible.

3.4.10.3.4 Design and Safety Features

The Centrifuge Test and Post Mortem Facilities Exhaust Filtration System is designed to protect plant personnel against uranium and HF exposure.

The Centrifuge Test and Post Mortem Facilities Exhaust Filtration System is designed to meet all applicable NRC requirements for public and plant personnel safety and effluent control and monitoring. The system design also complies with applicable standards of OSHA, EPA, and state and local agencies.

The Centrifuge Test and Post Mortem Facilities Exhaust Filtration System provides for continuous monitoring and periodic sampling of the gaseous effluent in the exhaust stack in accordance with the guidance in USNRC Regulatory Guide 4.16.

The system filters contaminated gases and continuously monitors exhaust gas flow to the atmosphere. The system also provides primary confinement for the Centrifuge Test and Post Mortem Facility by maintaining the Centrifuge Test and Post Mortem Facility at a negative pressure relative to adjacent areas during contaminated or potentially contaminated processes. An HF monitor and associated alarm and an alpha radiation monitor and associated alarm are installed in the exhaust stack to detect the release of hazardous materials to the environment.

3.4.10.3.5 Instrumentation

The process variables, pressure, fan speed, and damper positioning are all controlled automatically. The differential pressure across the filters is monitored to provide indication of when filter replacement is required. An HF monitor measures the concentration of HF gas in the air stream. Also, a radiation detector is used to measure the level of radiological airborne contamination (alpha only) present in the air stream located in the stack. Deviations from specified values for HF and alpha radiation are indicated by alarms. The HF and alpha radiation monitoring devices have non-interruptible power supplies in order to continue to function during a general power failure.

3.4.11 ~~(See 4.2.11)~~ Material Handling Processes

LBDCR-10-0033

3.4.11.1 Cylinder Receipt and Shipping

(See SAR § 12.1.2.9.1)The CRDB provides for handling of feed cylinders, product cylinders, semi-finished product cylinders, prepared empty cylinders and UBCs, and provides space for the following services:

LBDCR-10-0033

- Cylinder loading and unloading
- Inventory weighing
- Secure internal storage (no UBC or empty feed storage in CRDB)
- Preparation and storage area for overpack/protective structural packaging.

The cylinders are received, shipped offsite, stored, and transferred to and from the UF_6 Handling Areas, and UBC Storage Pad.

Prepared empty cylinders, semi-finished product cylinders, full feed cylinders, and final product cylinders are stored in the CRDB.

Full UBCs and empty feed cylinders are not stored in the CRDB. They are transported through the CRDB and stored in the UBC Storage Pad.

The CRDB layout is shown on Figure 3.3-8, Cylinder Receipt and Dispatch Building First Floor, and Figure 3.3-9, Cylinder Receipt and Dispatch BuildingSecond Floor. The UF_6 Feed cylinder delivery and storage requirements are presented in Table 3.4-19, UF_6 Feed Cylinder Delivery and Storage Requirements.

3.4.11.1.1 Description

(See SAR § 12.1.2.9.2) The majority of the floor area in the CRDB is used as a storage or staging area for feed and product cylinders. The cylinders are placed on concrete saddles to stabilize them while they are stored in this area. Different size saddles are provided for 48-in and 30-in cylinders. The cylinders are positioned such that access is possible from an overhead crane. LBDCR-10-0033

Trucks arrive at the building carrying feed cylinders, empty UBC or product cylinders, and enter through the main vehicle loading bay. This bay is equipped with vehicle access platforms that aid with cylinder loading and unloading operations.

Unloaded trucks either leave the site or remain in a staging area adjacent to the CRDB. Trucks in this staging area await cylinders that are to be shipped from the site.

3.4.11.1.2 Equipment

The following equipment is used for cylinder handling in the CRDB.

A. Vehicle Loading ~~And Unloading Platform.~~Area LBDCR-10-0033

(See SAR § 12.1.2.9.3 A.)The vehicle loading and unloading platforms are located adjacent to the main transport vehicle access doorways. These platforms provide a safe method of transfer to the vehicle trailer while loading and unloading activities are in progress. Cylinders will be stored a minimum of one meter from the vehicle platform to eliminate the fire hazard associated with trucks in the CRDB.

B. Double Girder Bridge Cranes.

(See SAR § 12.1.2.9.3 B.)Three double girder bridge cranes handle the cylinders in the CRDB. The cranes travel across two sets of rails. The west pair of rails supports two bridge cranes that can traverse the entire length of the CRDB. One bridge crane is supported by the east pair of rails and this can traverse the east half of the CRDB north of the Bunkered Area. They are operated by an automated control system and equipped with remotely operated grabs. Each hoist has a maximum lift of 9.75 m (32~~9.5~~ ft). Crane movement requirements are presented in Table 3.4-20, Crane Movement Requirements. The minimum lift is based upon the following data: LBDCR-10-0033 LBDCR-10-0001

- Floor to top height of a vehicle mounted ISO container 4.1 m (13.4 ft)
- Lift clearance between ISO container and underside of cylinder 0.6 m (2 ft)
- Typical length of a universal cylinder grab (including fixing) 2.0 m (6.6 ft)
- Allowance for unknown effect of a 48-in cylinder overpack 1.0 m (3.25 ft)
- Total 7.9 m (25.9 ft)

The crane specifications are as follows:

- West Span 18.75 m (61.5 ft)
- East Span 20.1 m (66 ft)
- Capacity 20 MT (44,100 lb)
- Hoist lift height 9.75 m (32 ft)
- Hoist lift speed (Variable Frequency Drive (VFD)) 6 m/min (20 ft/min)
- Travel length (for 2 West side cranes) 231.2 m (758.5 ft)
- Travel length (for East side crane) 58.7 m (192.5 ft)
- Bridge travel speed (VFD) 45.7 m/min (150 ft/min)
- Brake type Direct Current Disc

ISO containers are International Organization for Standardization Series 1 freight containers that are supplied in accordance with the ISO 668 Standard. These containers are used for intercontinental shipping. They are 2,438 mm (8 ft) wide and are available in a variety of heights ranging from 2,438 mm (8 ft) to 2,896 mm (9.5 ft).

C. Scales.

(See SAR § 12.1.2.9.3 C.) Each cylinder that enters or exits the CRDB is weighed. Weigh scales capable of weighing a load of 17 MT (37,500 lb) and capable of accepting a load of 20 MT (44,100 lb) are required on each end of the CRDB. One set of scales is utilized in the area adjacent to the cylinder truck loading/unloading bay. Another scale is located in the south portion of the CRD adjacent to the rail transporter. The scales are capable of weighing to a tolerance of ±2.5 kg (±5.5 lb). The scales have a reader and printout facilities. LBDCR-10-0033

D. Flatbed Trucks And Rail Transporters.

(See SAR § 12.1.2.9.3 D.)After processing, the cylinders are transported between the CRDB, the UF_6 Handling Areas, and the UBC Storage Pad via flatbed trucks. A double girder Gantry crane is used to manage the cylinders in the UBC Storage Pad. LBDCR-10-0033

3.4.11.1.3 Cylinder Specifications

Cylinders stored and handled in the CRDB vary in size and weight from 30B cylinders to 48Y cylinders. The cylinders have the following characteristics:

30B Cylinder

Weight of UF_6	2,277 kg	(5,020 lbs)
Gross cylinder weight	2,912 kg	(6,420 lbs)
Diameter	762 mm	(2.5 ft)
Length	2,070 mm	(6.8 ft)
48Y Cylinder		
Weight of UF_6	12,501 kg	(27,560 lbs)
Gross cylinder weight	14,860 kg	(32,761 lbs)
Diameter	1,232 mm	(4.08 ft)
Length	3,728 mm	(12.25 ft)

3.4.11.1.4 CRDB Storage and Processing Areas

(See SAR § 12.1.2.9.4) Cylinder storage and processing areas are shown on Figure 3.3-8, Cylinder Receipt and Dispatch Building First Floor, and on Figure 3.3-9, Cylinder Receipt and Dispatch BuildingSecond Floor. | LBDCR-10-0033

The CRDB accommodates the following approximate areas:

Site vehicle access/ loading bays (2 ea.)	400 m2 (each)	(4,306 ft2) (each)
Preparation Area/Marshalling/ Weighing Area	715 m2	(7,700 ft2)
Cylinder Storage Area (usable area)	1,942 m2	(20,900 ft2)
Cylinder Transporting and Stillage Area	603 m2	(6,500 ft2)

3.4.11.1.4.1 Cylinder Storage Area

Feed material and product material is stored under vacuum in corrosion resistant Type 48Y and Type 30B cylinders, respectively. The CRDB provides enough space to store about 320 cylinders and overpacks in this 20,900 ft2 (1,942 m2) area, depending on the types of cylinders stored. If overpacks are stored elsewhere in the CRDB, this area can store approximately 210 each 48Y cylinders and 110 each 30B cylinders. These cylinders can be stored without providing room for cylinder maintenance because they are only in temporary storage.

3.4.11.2.2 Cylinder Transport Between the CRDB and the UF_6 Handling Areas

A rail system extends between the CRDB and all of the UF_6 Handling Areas. The rail has two independent rail transporters. Each of the transporters has a drawbridge that links the transporter to the appropriate station or adjoining transporter. The UF_6 rail transporters are depicted in Figure 3.4-21, Rail Transporter Area Equipment Drawing. Its function is the transfer of cylinders to the appropriate Product Blending System Donor Station, Product Blending System Receiver Station, Product Liquid Sampling Autoclave, Solid Feed Station, Product Low Temperature Take-off Station, Tails Low Temperature Take-off Station or Feed Purification Low Temperature Take-off Station.

Cylinders are empty product, product, empty feed, feed, empty UBCs, UBCs or semi-finished product cylinders. Each of the transporters may be battery powered or fed by an electric feeder embedded in the concrete.

3.4.11.2.3 Cylinder Transport to Support Centrifuge Test Facility Hot Acceptance Testing Feed Material Initial Fill

NEF Centrifuge Test Facility (CTF) Hot Acceptance Testing (HAT) feed vessel initial fill will precede CRDB completion by several months. Accordingly, transport truck delivery and receiving of the initial feed material 30B cylinders will be accomplished at the Centrifuge Assembly Building (CAB). The initial fill material will be delivered in one or more 30B cylinders. Shipment of UF_6 in a 30B container requires a protective over pack when containing more than 11.3 kg. DOT PACKAGE DESIGN CERTIFICATE USA/0411/H(U)-96, Revision 1 allows shipment of containers without over pack protection provided no more than heel quantities (11.3 kg) of UF_6 are within the container. Compliance with this certificate permits transport without fire protective over packs.

Transport trucks(s) will be received and unloaded outside the CAB. The after receipt inspection, the cylinders will be moved by diesel or battery powered mobile equipment into the CAB, placed on suitable stillage and weighed.

After the CTF feed vessel initial charge is complete, the cylinder is removed from the CAB by diesel or battery powered mobile equipment. The cylinder is reloaded onto the delivery truck to return to the supplier.

3.4.11.3 UBC Storage Pad

The NEF utilizes an area outside of the CRDB for storage of UBCs. The UBC Storage Pad is used for storage of cylinders containing UF_6 that is depleted in ^{235}U. It is also used for the storage of empty feed cylinders. Access to the cylinder storage pad is controlled and a fence is provided so that only authorized vehicles may enter the

area. The tails storage requirements are presented in Table 3.4-21, UBC Storage System Requirements.

3.4.11.3.1 Description

(See SAR § 12.1.1.4) Space is allocated to provide storage of UBCs for 30 years of output from the facility. The uranium byproduct material is stored under vacuum in corrosion resistant Type 48Y cylinders. Empty feed cylinders are also Type 48Y cylinders. | LBDCR-10-0033

3.4.12 References

Edition of Codes, Standards, NRC Documents, etc that are not listed below are given in Table 3.0-1.

~~LES, 1993. Claiborne Enrichment Center Safety Analysis Report, Louisiana Energy Services, December 1993.~~

~~NRC, 1994. Safety Evaluation Report for the Claiborne Enrichment Center, Homer, Louisiana, NUREG-1491, U.S. Nuclear Regulatory Commission, January 1994.~~

LBDCR-10-0012

SA, 2001. Serco Assurance, ANSWERS Software Service, "Users Guide for Version 8 ANSWERS/MONK(98) 6," 1987-2001.

Weighing System	
Type	Load Cell
Capacity, kg (lb)	To be determined at final design.
Feed Purification Vacuum Pump/Chemical Trap Set	
Number per Cascade Hall	2
Available, On-line	1
Spare (Standby, Prep, Maintenance)	1
Vacuum Pump	
Capacity, m^3/hr (gpm)	40 (176)

Chemical Traps (Note 1)					
Type	Chemical	Chemical	Adsorption	~~Adsorption~~Mechanical Separation	LBDCR-09-0110
Function	UF_6 Removal	HF Removal	Oil Removal	Oil Removal	
Count	One	~~One~~Two	One (pump inlet)	One (pump outlet)	LBDCR-09-0110
Media	Activated Carbon	Aluminum Oxide (Al_2O_3)	Al_2O_3	~~Activated Carbon~~Mechanical	

Note 1: Each Vacuum Pump/Chemical Trap Set has the above chemical traps.

Hot Boxes, Pipe Heat Tracing	
Media	Electric
Temperature, °C (°F)	56 to 64 (133 to 147)

Nitrogen Purge	
Operating Pressure, mbar (psia)	<1,000 (14.5)
Gas Usage	Intermittent flow in small quantities.

Mobile Feed Sampling Rig				
Number Per Cascade Hall		1		
Vacuum Pump				LBDCR-09-0138
Capacity, m^3/hr (cfm)		48 (28.3)		
Chemical Traps				
Type	Chemical	Adsorption	~~Adsorption~~Mechanical	LBDCR-09-0110

			Separation
Function	UF_6 and HF Removal	Oil Removal	Oil Removal
Count	One	One (pump inlet)	One (pump outlet)
Media	Mixed-bed with activated carbon and aluminum oxide (Al_2O_3)	(Al_2O_3)	~~Activated Carbon~~Mechanical

LBDCR-09-0110

Product Vent Vacuum Pump/Chemical Trap Set					
Number Per Cascade Hall			2		
Available, On-line			1		
Spare (Standby, Prep, Maintenance)			1		
Vacuum Pump					
Capacity, m^3/hr (cfm)			40 (23.5)		
Chemical Traps (Note 1)					
Type	Chemical	Chemical	Adsorption	~~Adsorption~~Mechanical Separation	LBDCR-09-0110
Function	UF_6 Removal	HF Removal	Oil Removal	Oil Removal	
Count	One	One	One (pump inlet)	One (pump outlet)	LBDCR-09-0110
Media	Activated Carbon	Aluminum Oxide (Al_2O_3)	Al_2O_3	~~Activated Carbon~~Mechanical	LBDCR-09-0110

Note 1: Each Vacuum Pump/Chemical Trap Set has the above chemical traps.

Nitrogen Purge	
Operating Pressure, mbar (psia)	<1,000 (14.5)
Gas Usage	Intermittent flow in small quantities.

Assay Sampling Pump/Chemical Trap Set				
Number Per Cascade Hall		1		
Vacuum Pump				
Capacity, m^3/hr (cfm)		48 (28.3)		
Chemical Traps				
Type	Chemical	Adsorption	~~Adsorption~~Mechanical Separation	LBDCR-09-0110
Function	UF_6 and HF Removal	Oil Removal	Oil Removal	
Count	One	One (pump inlet)	One (pump outlet)	
Media	Mixed-bed activated carbon and aluminum oxide (AL_2O_3)	Al_2O_3	~~Activated Carbon~~Mechanical	LBDCR-09-0110

Talls Evacuation Pump/Chemical Trap Set				
Number Per Cascade Hall			1	
Vacuum Pump				
Capacity, m^3/hr (cfm)			40 (23.5)	
Chemical Traps				
Type	Chemical	~~Chemical~~	Adsorption	~~Adsorption~~Mechanical Separation
Function	UF_6 and HF Removal	~~HF Removal~~	Oil Removal	Oil Removal
Count	One	~~One~~	One (pump inlet)	One (pump outlet)
Media	Mixed Bed (Activated Carbon and Aluminum Oxide (Al_2O_3))	~~Aluminum Oxide (Al_2O_3)~~	Al_2O_3	~~Activated Carbon~~Mechanical

LBDCR-09-0110

~~Nitrogen Purge~~	
~~Operating Pressure, mbar (psia)~~	~~<1,000 (14.5)~~
~~Gas Usage~~	~~Intermittent flow in small quantities.~~

LBDCR-09-0110

Table 3.4-10 Product Liquid Sampling System Design Basis

Equipment Requirements	
Component	**Number Required (Total Plant)**
Product Liquid Sampling Systems	1
Product Liquid Sampling Autoclaves	~~4 (Note 1)~~3
~~Note 1: Three autoclaves support the current plant capacity and the fourth supports the planned SBM expansion and operational flexibility.~~	

LBDCR-10-0036

Capacity Requirements	
Product Cylinders	Equivalent 9 / week

Product Liquid Sampling Autoclaves	
Design Pressure, bar absolute (psia)	12 (174) and Full Vacuum
Design Temperature, °C (°F)	160 (320) (Pressure Vessel) 120 (248) (Seals, Instruments)
Autoclave Cooling Water, °C (°F)	6 (42.8)

Product Cylinder	
Cylinder Type	30B
Capacity UF_6, kg (lb)	2,277 (5,021)

Product Sampling Manifold	
Sample Bottle Type	1S
Maximum Net Weight per bottle, kg (lb) UF_6	0.45 (0.99)
Minimum Volume per bottle, L (gal)	0.15 (0.04)

Table 3.4-12 Contingency Dump System Design Basis

Equipment Requirements			
Components	**Quantity per**		
	Cascade Hall	**Plant Module**	**Plant Total**
Sodium Fluoride Trap	24	48	144
Buffer Volume	8	16	48
Vacuum Pump/ Chemical Trap Set	8	16	48

System Capacity	Per Cascade Hall
Peak Dump Flow, kg/hr (lb/hr)	38.1 (84.0)
Dump Capacity, kg (lb)	15 (33.1)
Dump Time, hr	18

Chemical Trap	
Type	Sodium Fluoride Trap
Capacity UF_6, kg (lb)	100 (221)

Contingency Dump Vacuum Pump/Chemical Trap Set				
Vacuum Pump				
Capacity, m^3/hr (cfm)	40 (23.5)			
Chemical Traps				
Type	Chemical	~~Chemical~~	Adsorption	~~Adsorption~~Mechanical Separation
Function	UF_6 and HF Removal	~~HF Removal~~	Oil Removal	Oil Removal
Count	~~1~~One	~~1~~	~~1~~One (pump inlet)	~~1~~One (pump outlet)
Media	Mixed Bed (Activated Carbon and Aluminum Oxide (Al_2O_3))	~~Aluminum Oxide (Al_2O_3)~~	Al_2O_3	~~Activated Carbon~~Mechanical

LBDCR-09-0110

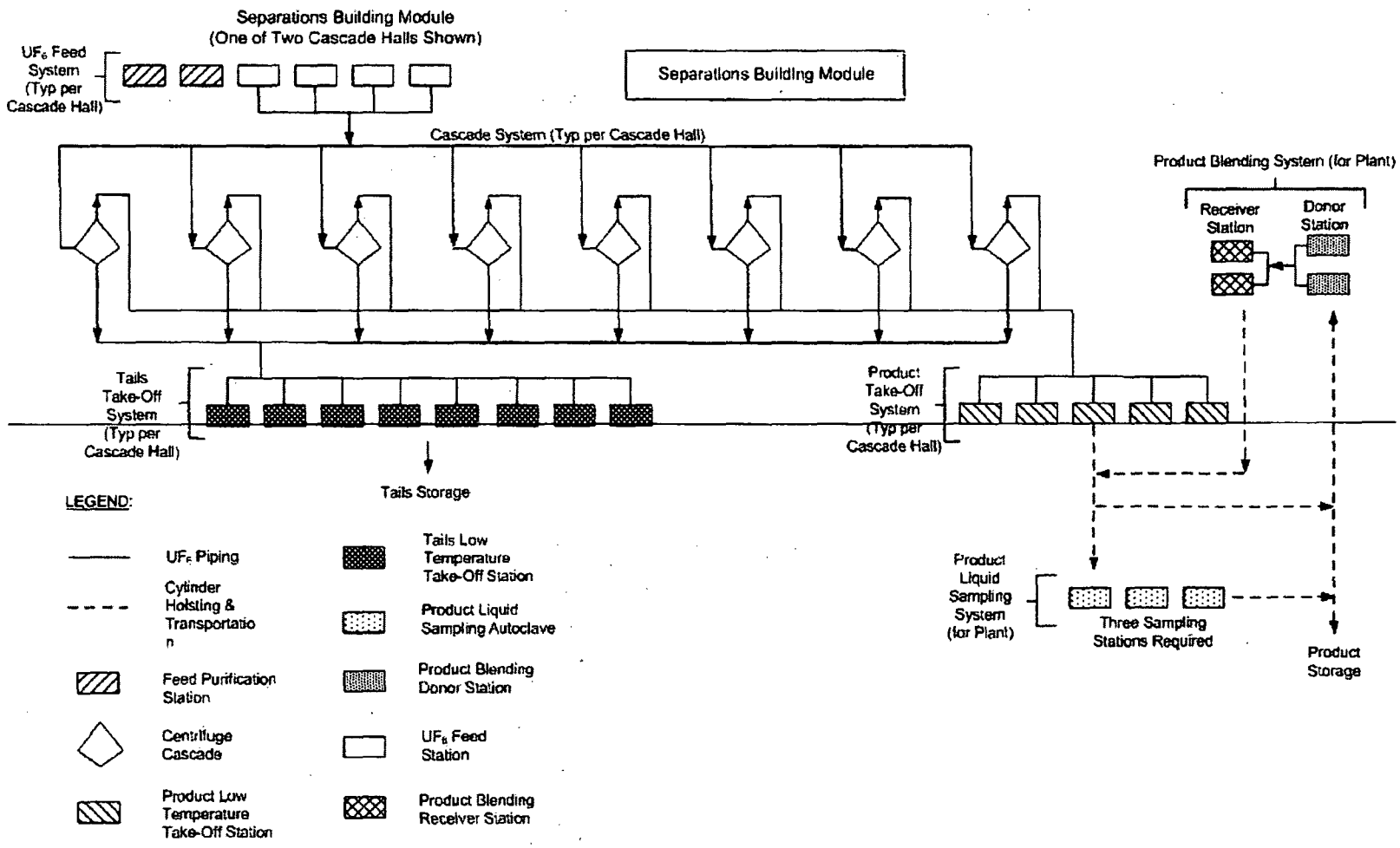

LBDCR-10-0009

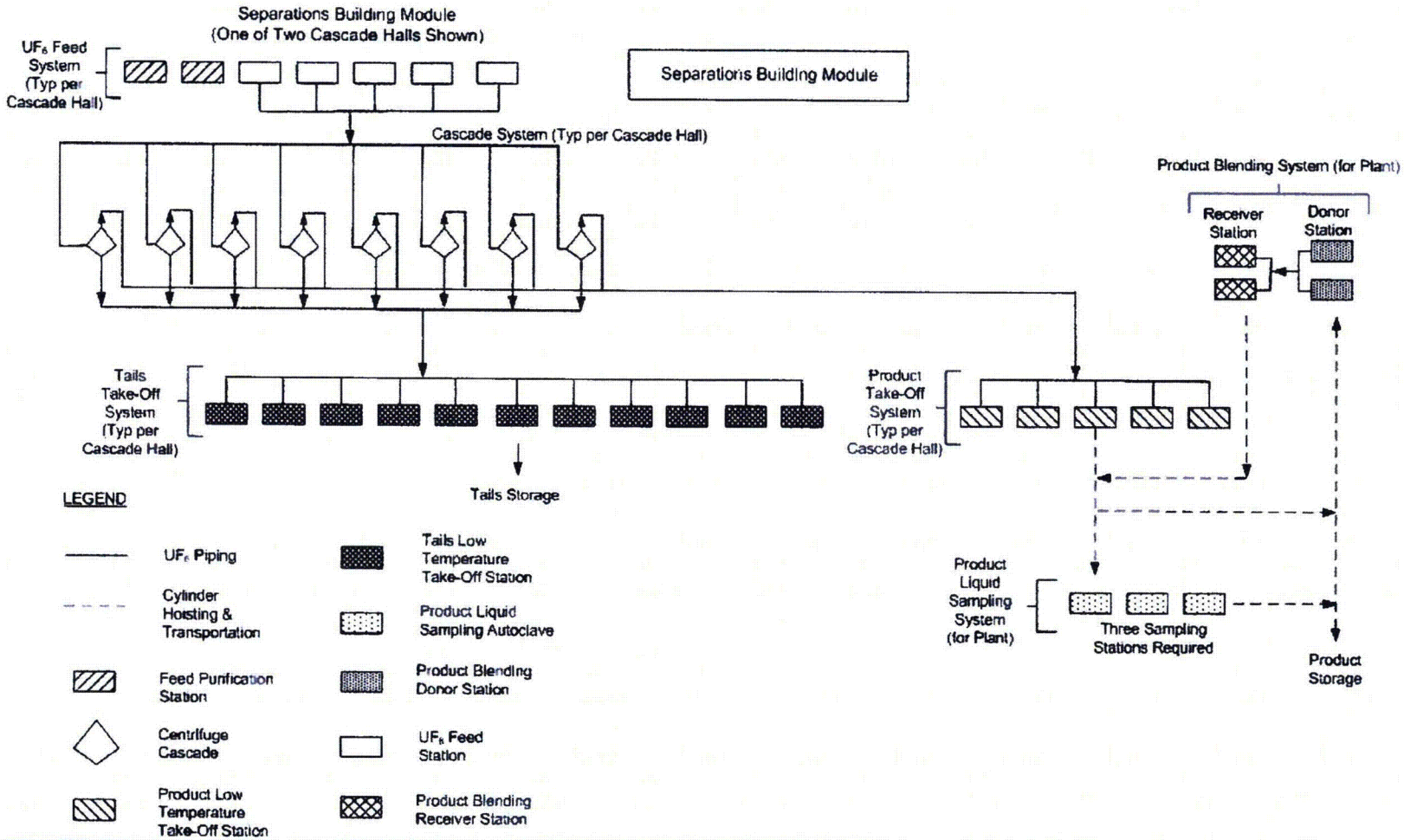

Figure 3.4-1 Pictorial Representation of the Enrichment Process

LBDCR-10-0009

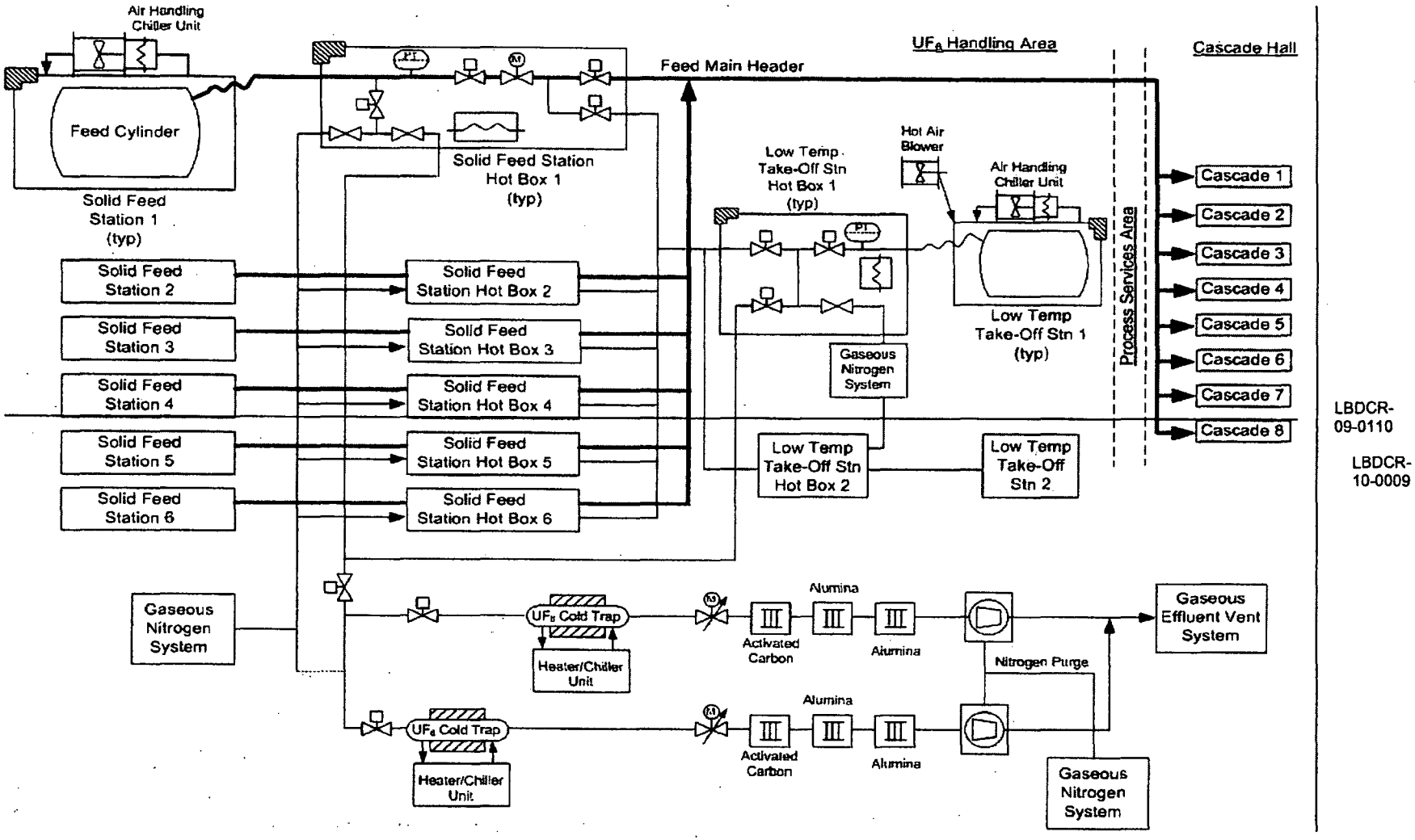
Air Handling Chiller Unit
Feed Cylinder
Solid Feed Station 1 (typ)
Solid Feed Station 2
Solid Feed Station 3
Solid Feed Station 4
Solid Feed Station 5
Solid Feed Station 6
Solid Feed Station Hot Box 1 (typ)
Solid Feed Station Hot Box 2
Solid Feed Station Hot Box 3
Solid Feed Station Hot Box 4
Solid Feed Station Hot Box 5
Solid Feed Station Hot Box 6
Feed Main Header
UF6 Handling Area
Cascade Hall
Low Temp Take-Off Stn Hot Box 1 (typ)
Hot Air Blower
Air Handling Chiller Unit
Low Temp Take-Off Stn 1 (typ)
Gaseous Nitrogen System
Low Temp Take-Off Stn Hot Box 2
Low Temp Take-Off Stn 2
Process Services Area
Cascade 1
Cascade 2
Cascade 3
Cascade 4
Cascade 5
Cascade 6
Cascade 7
Cascade 8
LBDCR-09-0110
LBDCR-10-0009
Gaseous Nitrogen System
UF6 Cold Trap
Heater/Chiller Unit
Activated Carbon
Alumina
Alumina
Nitrogen Purge
Gaseous Effluent Vent System
UF6 Cold Trap
Heater/Chiller Unit
Activated Carbon
Alumina
Alumina
Gaseous Nitrogen System

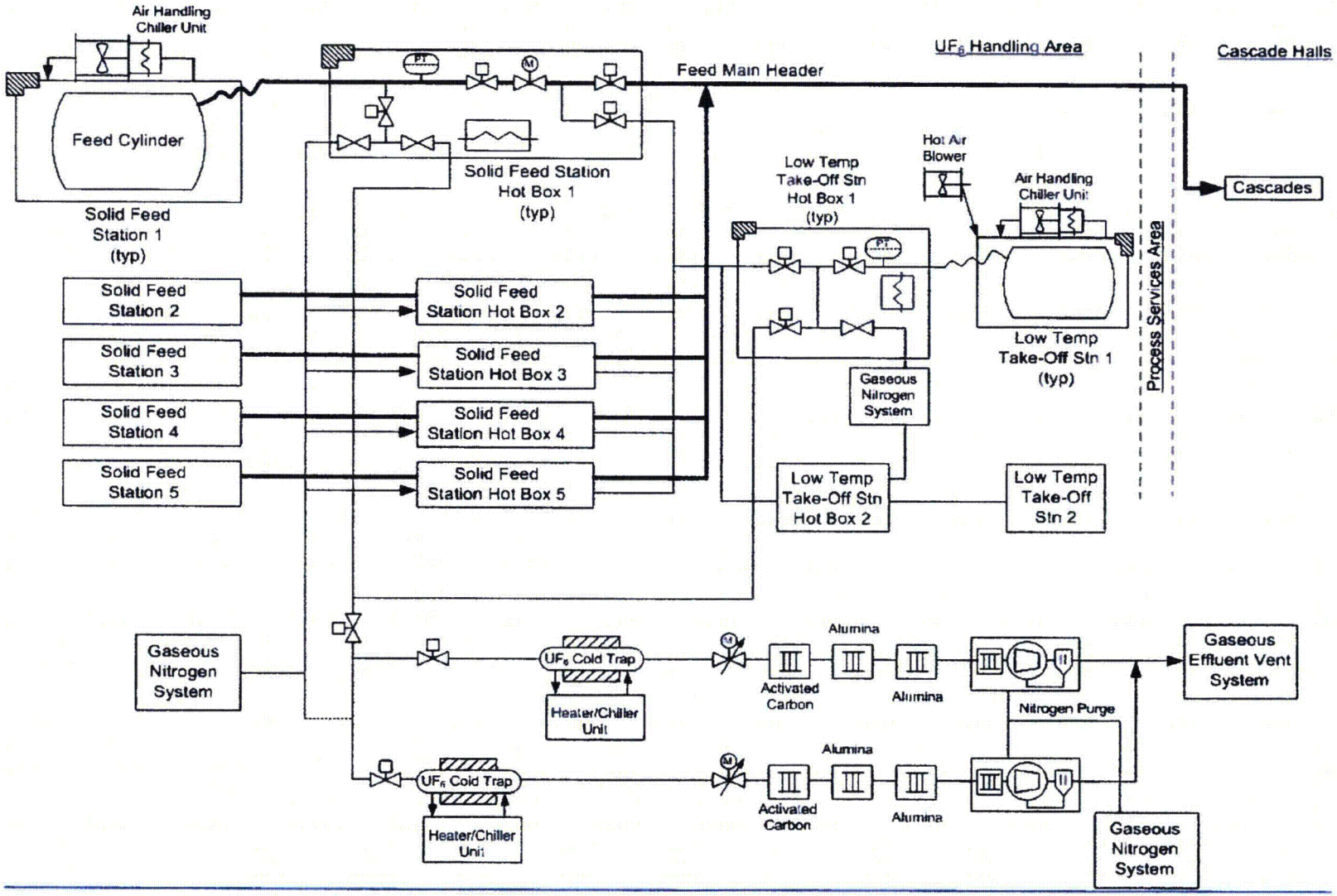

Figure 3.4-2 Process Flow Diagram UF_6 Feed System

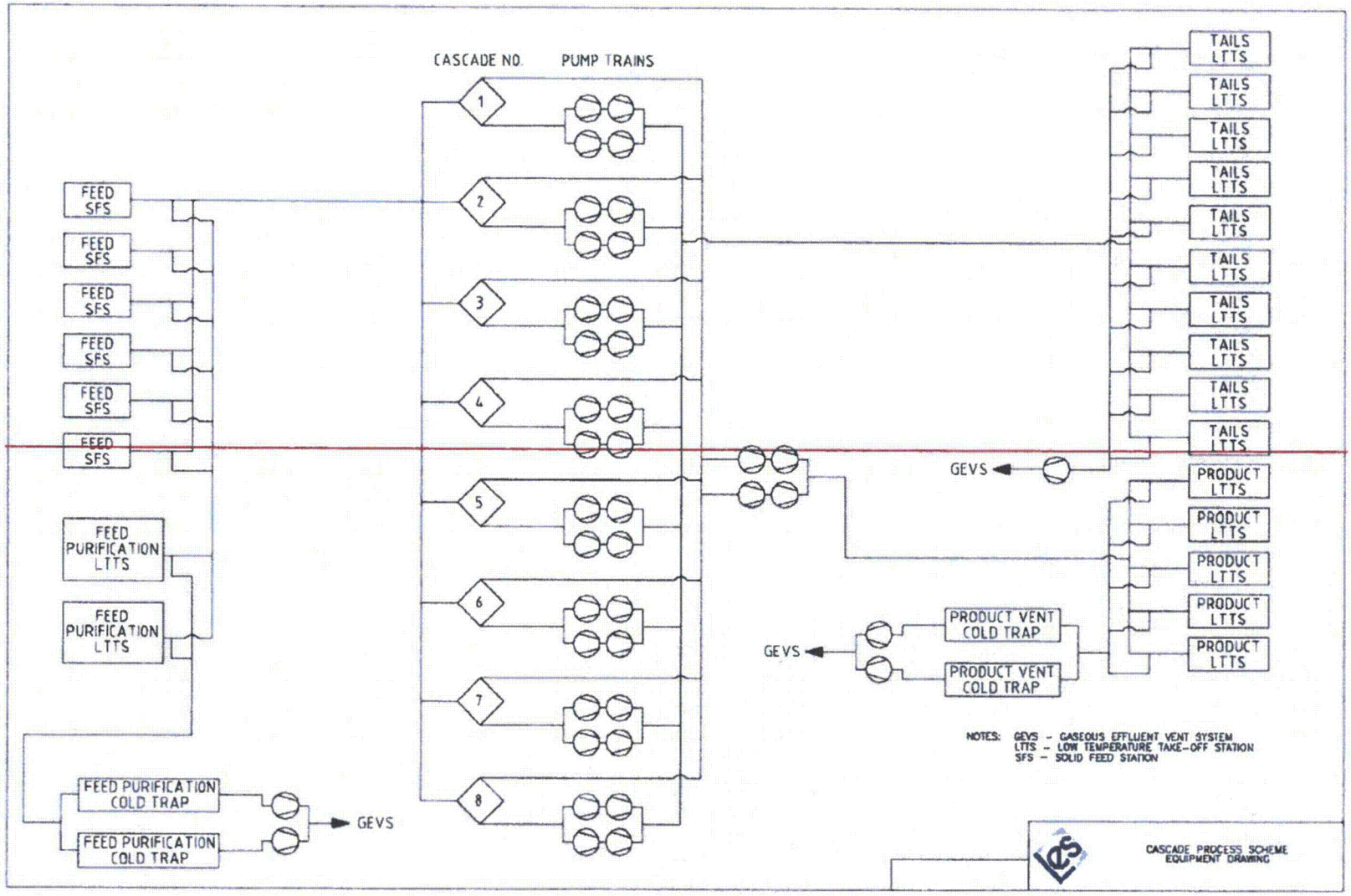

LBDCR-10-0009

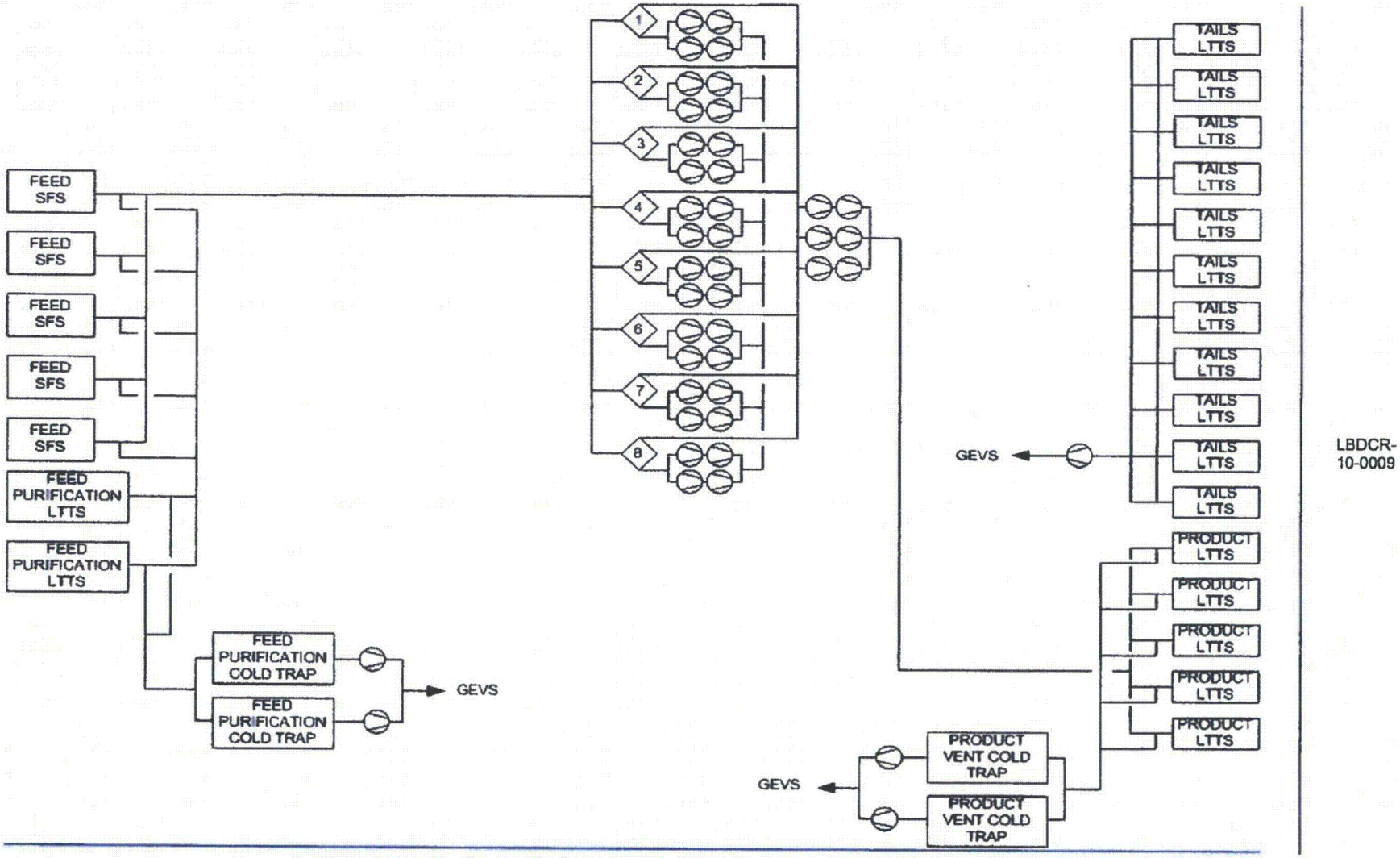

Figure 3.4-8 Cascade Process Scheme Equipment Drawing

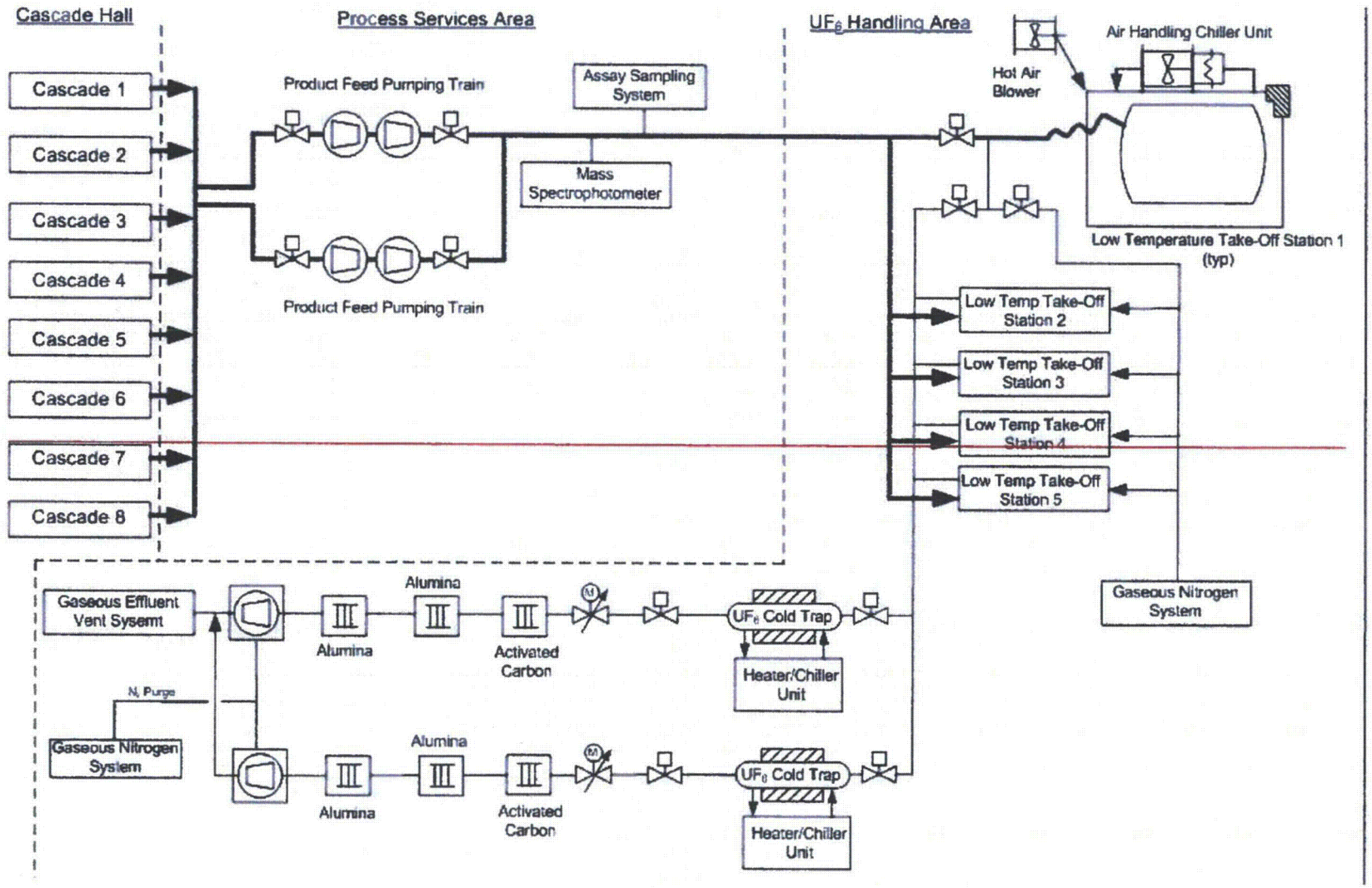

LBDCR-09-0110

LBDCR-10-0009

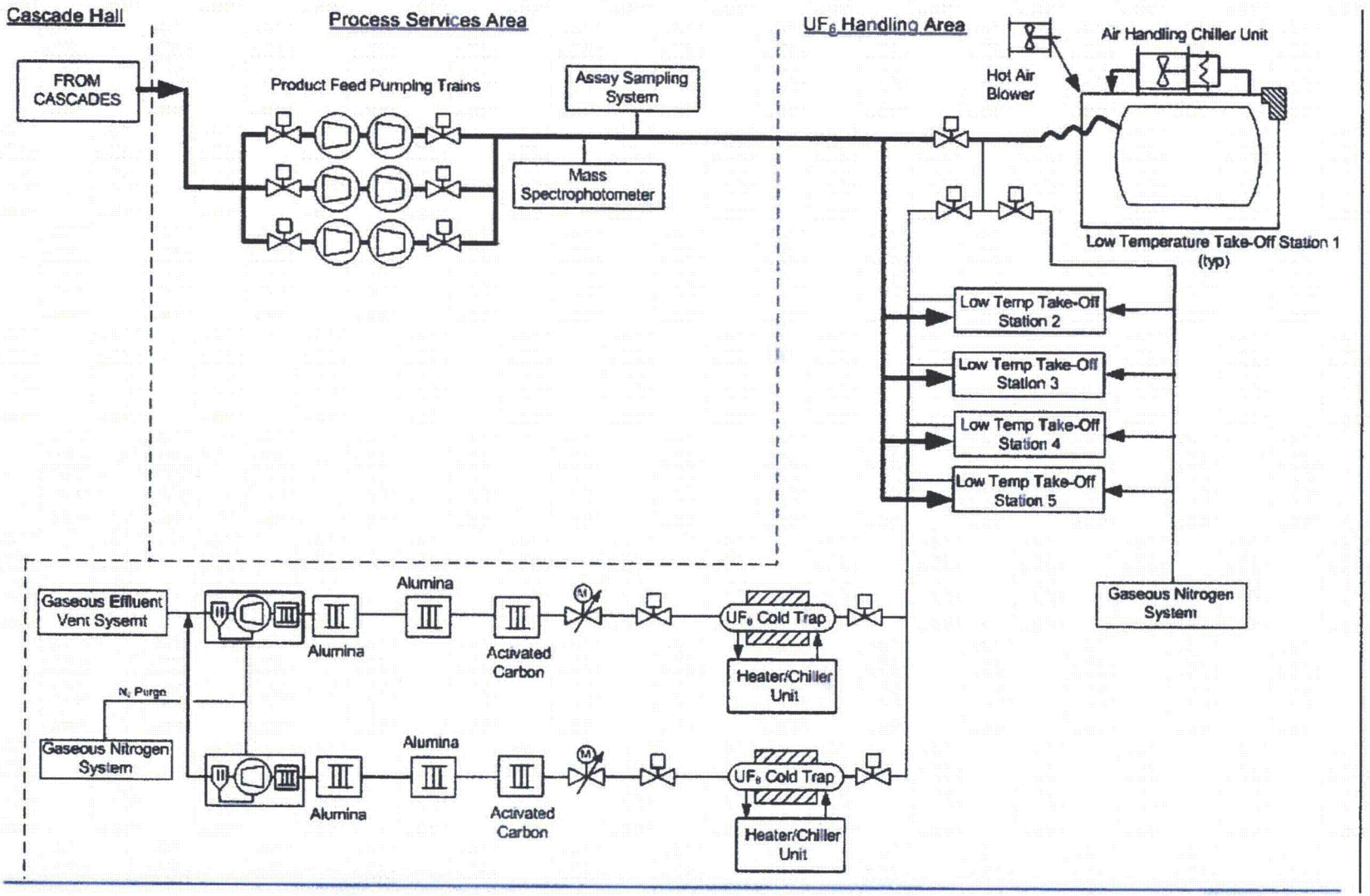

LBDCR-09-0110

LBDCR-10-0009

Figure 3.4-10 Process Flow Diagram Product Take-off System

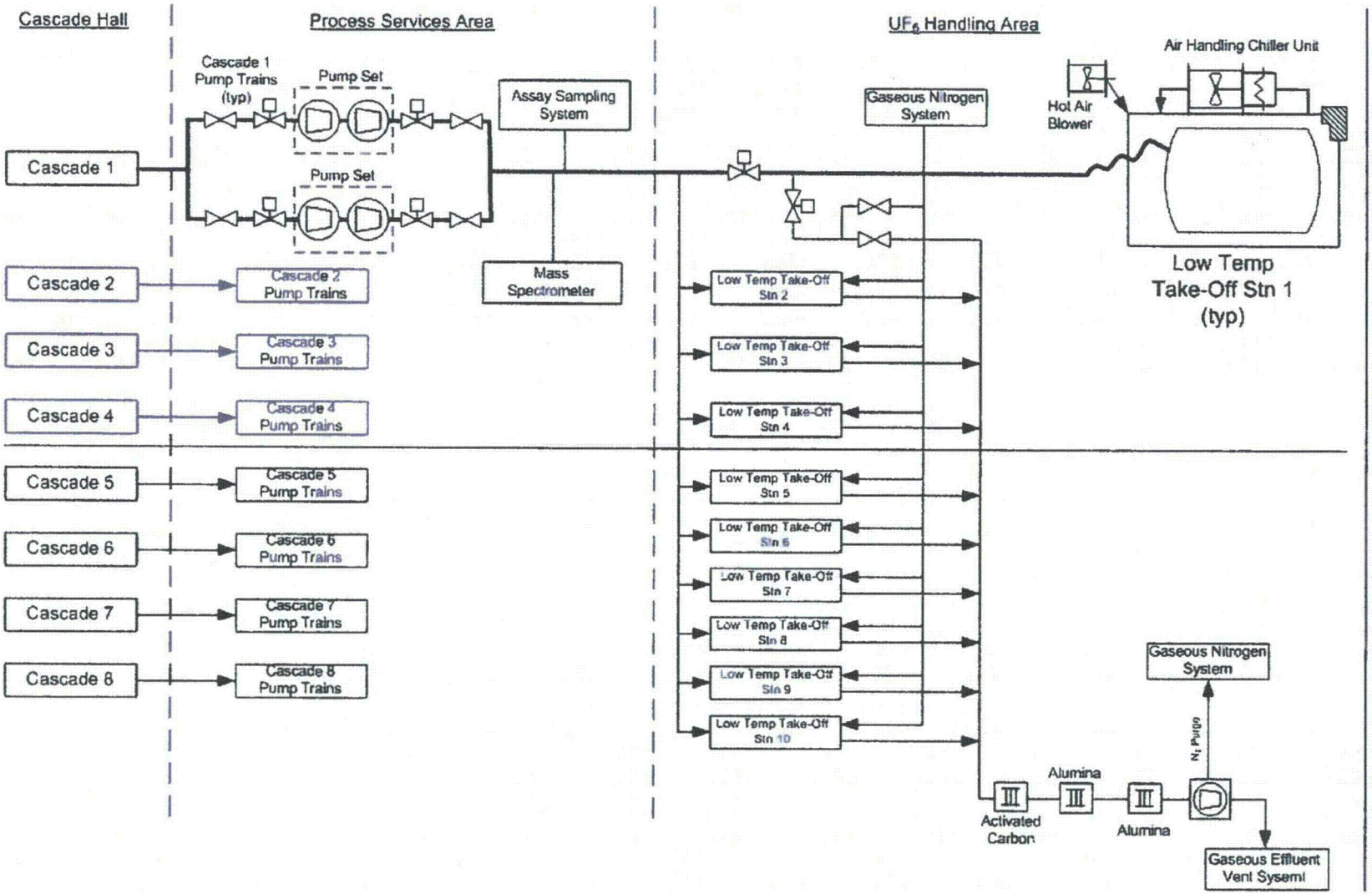

LBDCR-09-0110

LBDCR-10-0009

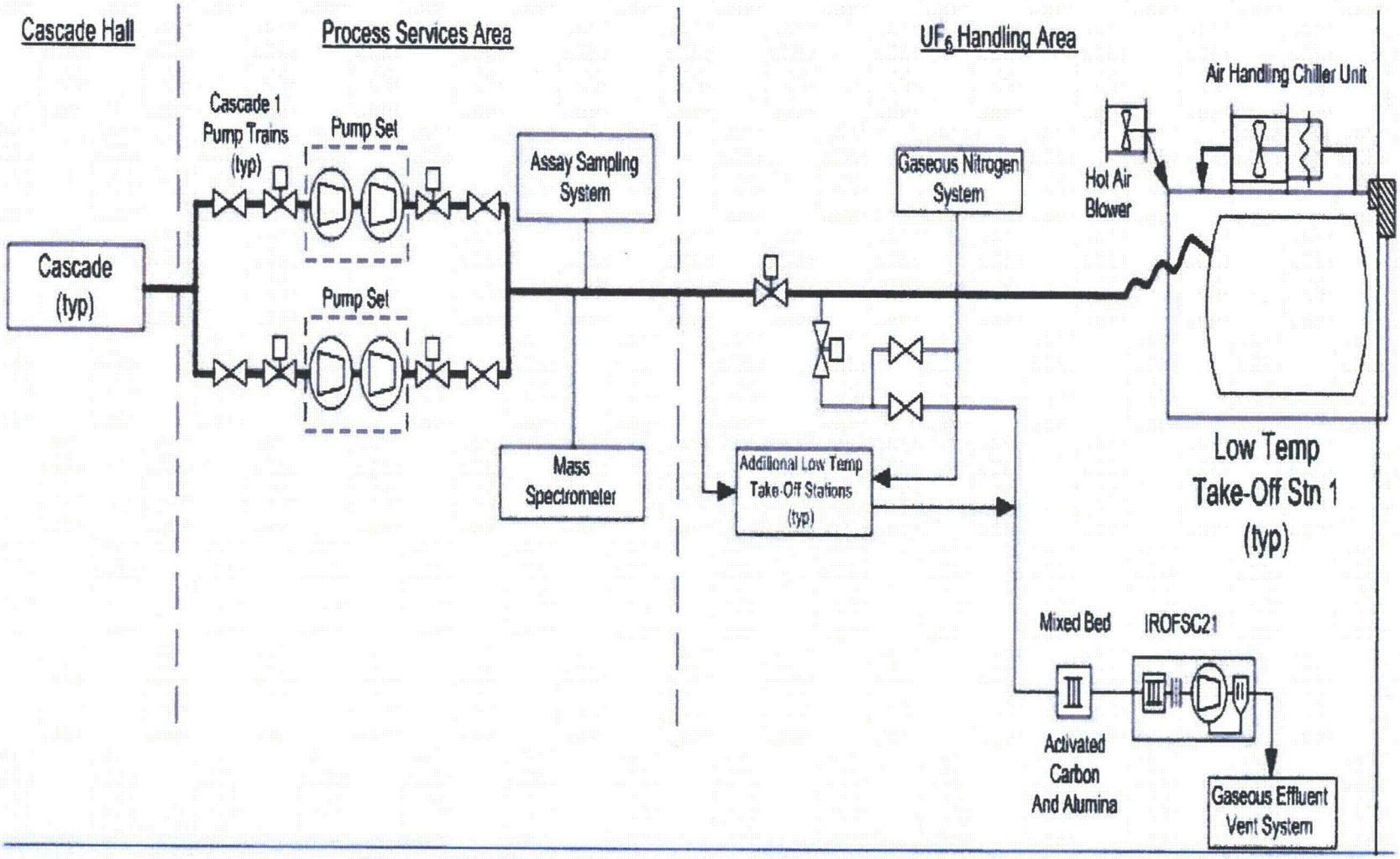

LBDCR-09-0110

LBDCR-10-0009

Figure 3.4-11 Process Flow Diagram Tails Take-off System

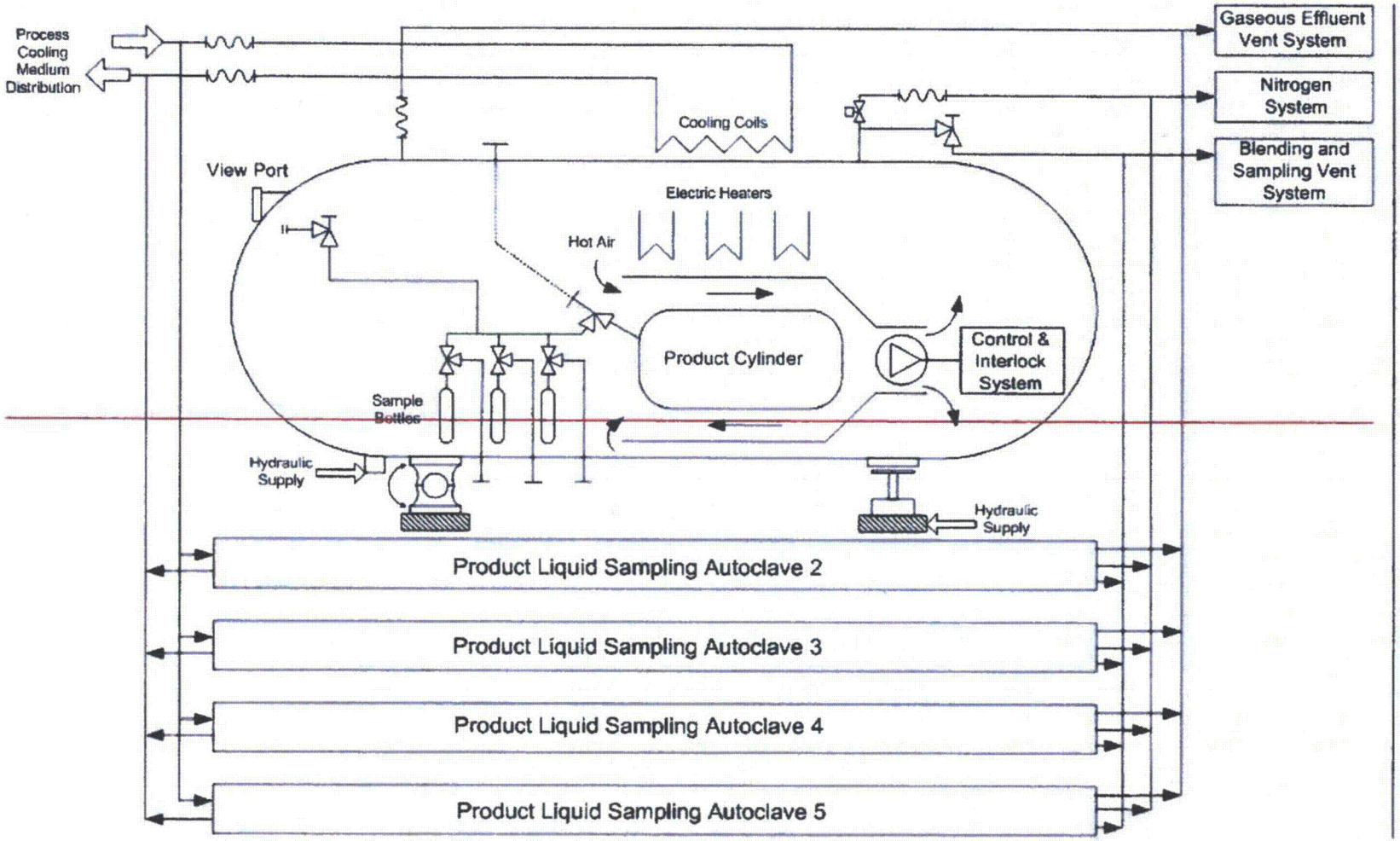

LBDCR-10-0036

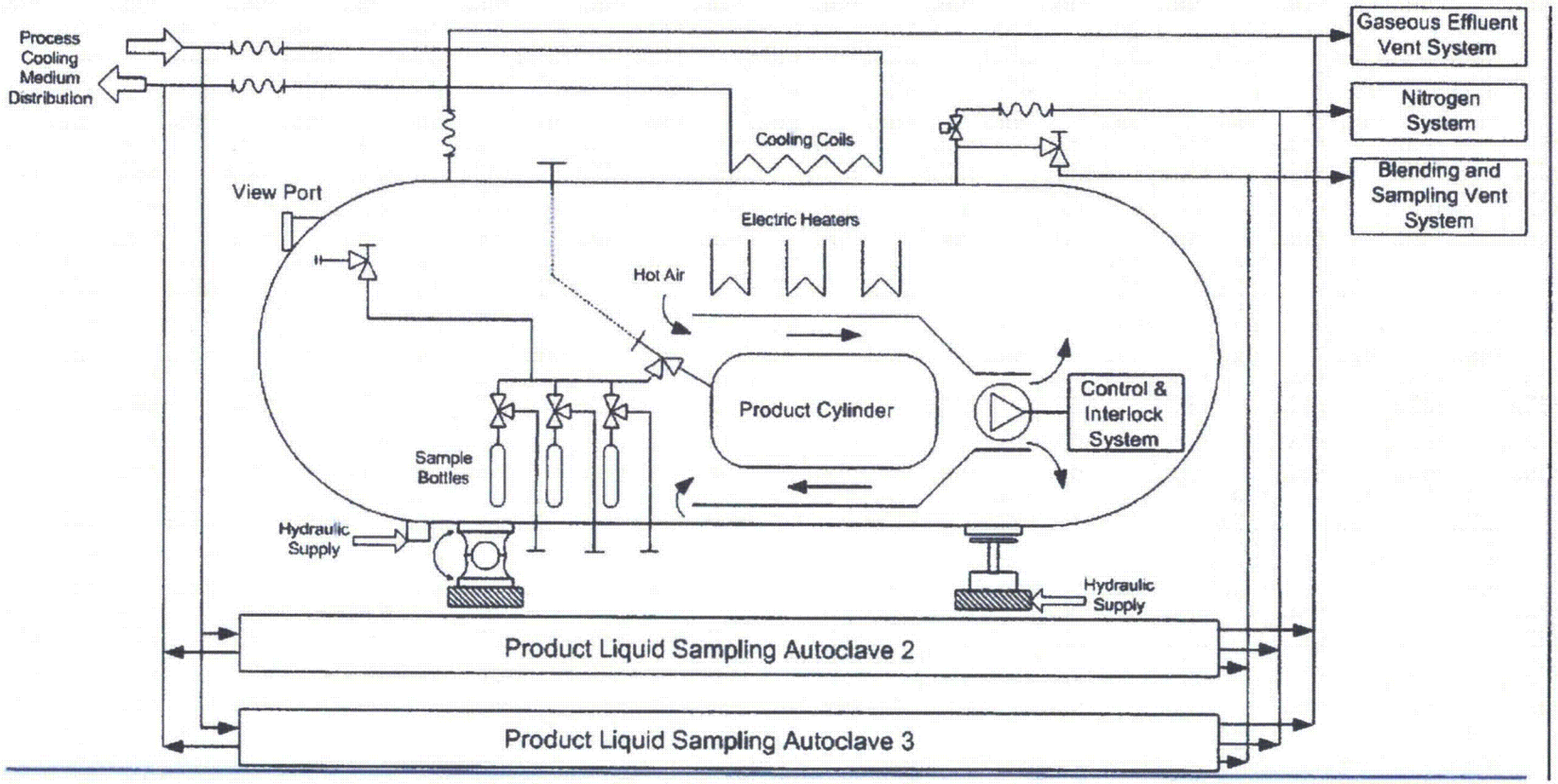

LBDCR-10-0036

Figure 3.4-13 Process Flow Diagram Product Liquid Sampling System

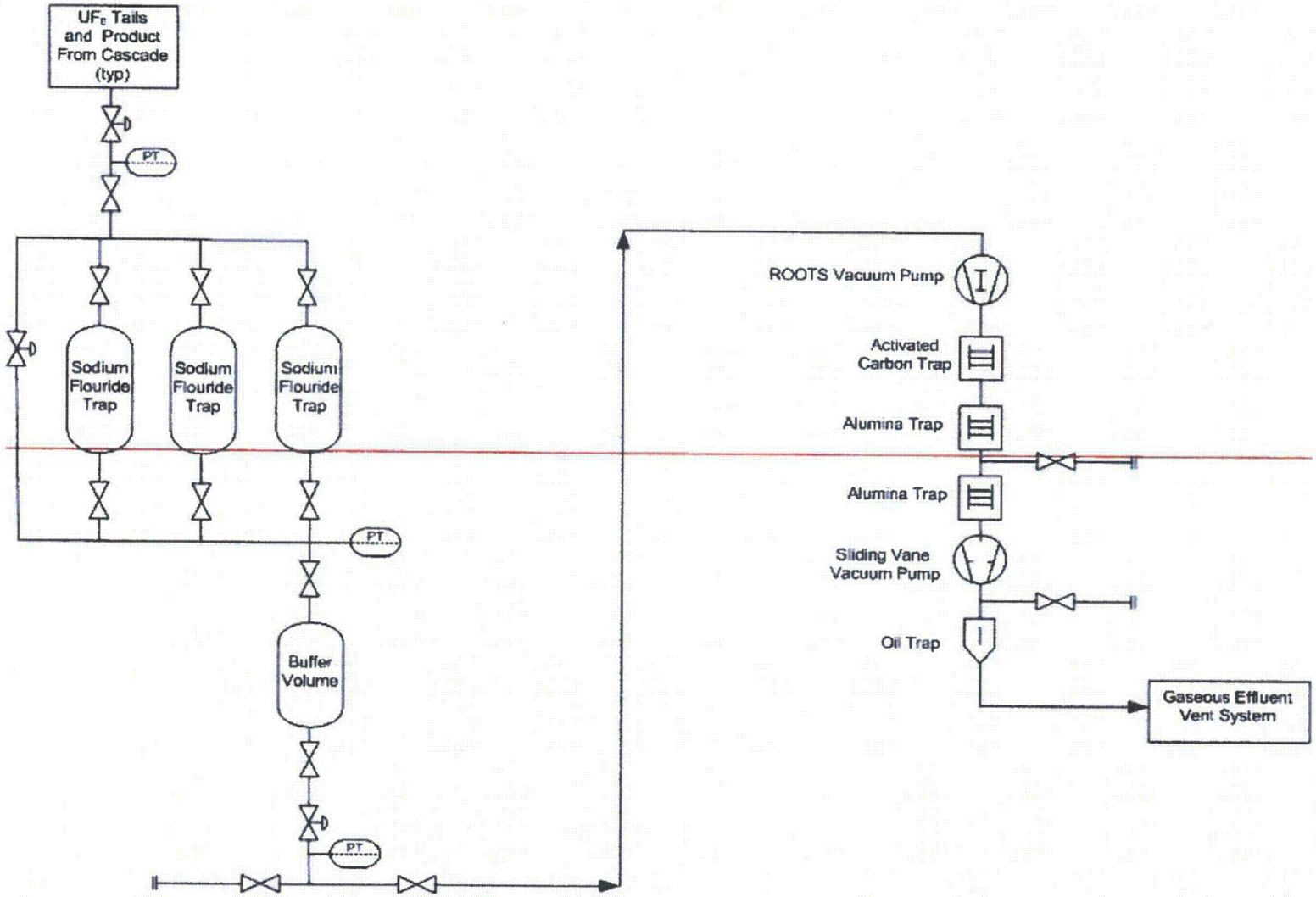

LBDCR-09-0110

LBDCR-10-0009

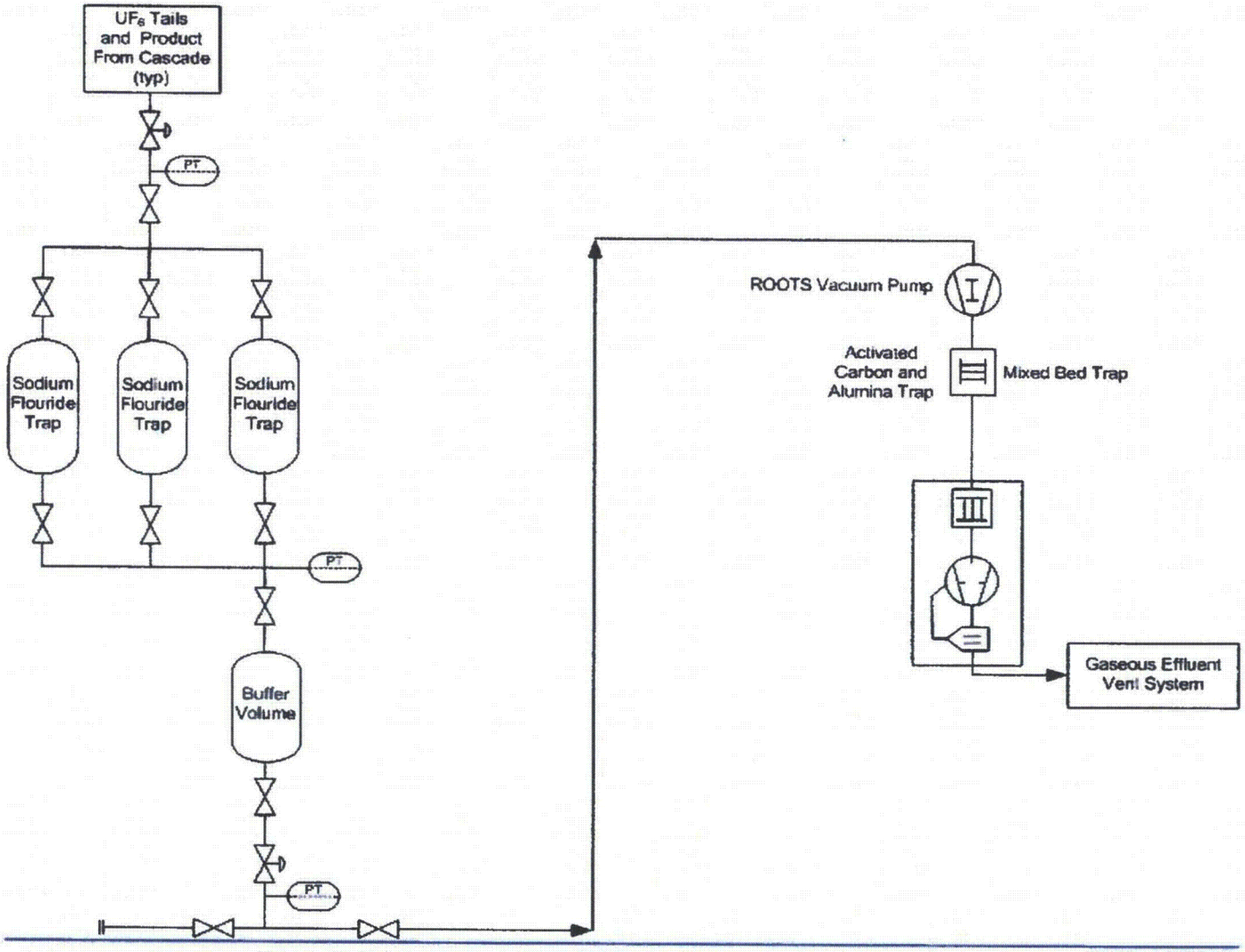

Figure 3.4-15 Process Flow Diagram Contingency Dump System

LBDCR-09-0110

LBDCR-10-0009

3.5 ~~(SEE 4.3)~~ UTILITY AND SUPPORT SYSTEMS

LBDCR-10-0033

Louisiana Energy Services' (LES) National Enrichment Facility (NEF) utility and support systems are described in this section. The information provided for each system emphasizes capacities, redundancies, and other provisions for coping with routine and non-routine events.

The National Enrichment Facility (NEF) consists of three Separations Building Modules (i.e., SBM1001, SBM1003, and SBM1005). Some of the utility and support systems are duplicated in each Separations Building Module while other systems serve the entire facility. Descriptions and flow diagrams of duplicated systems presented in this section represent Separations Building Module-1001 systems, which are generally identical in SBM 1003 and SBM1005. Any differences are clearly indicated in the text and figures.

The system descriptions provided for each system include functional requirements, design capacities, system interfaces, and descriptions of major components. In addition, operational characteristics are discussed for both routine operations and non-routine operations. Supporting information is provided in the form of flow diagrams to facilitate an understanding of the system design.

Finally, safety considerations are described for each system. The calculated values of k_{eff} provided in the following sections were obtained using the criticality code MONK8A (SA, 2001), in conjunction with the JEF2.2 nuclear data library. All values of k_{eff} given in the following sections are equal to $k_{calc} + 3\ \sigma_{calc}$ with a safety limit of 0.95. The health and safety of the public are protected such that a failure or inadvertent operation of any of the utility systems would not result in a release of hazardous quantities of chemicals or radiation. The basis for this conclusion is presented in Section 3.7, General Types of Accident Sequences, and Section 3.8, Items Relied on for Safety (IROFS). LBDCR-10-0012

Although many of the utility and support systems do not contain items relied on for safety, appropriate design and operating features that enhance public safety, worker safety, and facility reliability are provided for each system. Items relied on for safety, which are associated with utility and support systems, are listed in Section 3.8, Items Relied On For Safety (IROFS). The Codes and Standards generally applicable to the utility and support systems are listed in Table 3.5-1, Codes and Standards.

3.5.1 Building Ventilation

Note: The Heating Ventilation and Air Conditioning (HVAC) systems and Gaseous Effluent Vent Systems (GEVS) for the NEF are undergoing redesign. After these design changes are finalized the information in Section 3.5.1 (Building Ventilation),, Section 3.4.9 (Gaseous Effluent Vent Systems), and other sections that reference GEVS will be revised accordingly.

3.5.1.1.7 Technical Services Building (TSB) HVAC System

The TSB HVAC System maintains the room temperature in the building The TSB HVAC System consists of six large rooftop air conditioning units and one large air conditioning unit placed on the ground near the TSB. The system is supplemented with electric duct mounted heaters and small air conditioning units. Twelve roof-mounted return/exhaust fans provide return airflow. The Control Room, Central Alarm Station, Emergency Operations Center and associated areas are cooled by two units, one of which is provided with diesel backed power for investment protection. The HVAC system flow diagrams are shown in the following figures:

- Figure 3.5-5, Flow Diagram, TSB First Floor HVAC System
- Figure 3.5-6, Flow Diagram, TSB Second Floor HVAC System

3.5.1.1.8 Centrifuge Assembly Building HVAC System

The Centrifuge Assembly Building (CAB) HVAC System maintains room temperature in the Centrifuge Assembly Building.

All areas of the CAB are cooled using direct expansion (DX) roof-top mounted air conditioning (A/C) units. Each A/C unit consist of an air intake and return air mixing section, a filter section, an electric heating section and a supply fan. Dedicated return fans are not utilized. All A/C units are fitted with digital controls and can be operated and monitored from a central control station located inside the CAB. Each A/C unit can also be controlled manually using a local microprocessor located inside the A/C unit on the roof.

The control system for the A/C units consists of a temperature sensor which controls loading of the air conditioning compressors (cooling mode) or the electric heaters (heating mode). Digital process sensors measure key HVAC parameters such as filter differential pressure, air flow and air temperature. Certain parameters are alarmed and will be displayed at the central digital control station, or in some cases, on the local microprocessor. For the A/C units which supply the Centrifuge Assembly Areas, additional controls are provided to ensure that sufficient outside air is used to keep the Centrifuge Assembly Areas at a slightly positive pressure.

~~The~~ Centrifuge Assembly Areas A and B are ~~also~~ provided with air filtration units (AFUs). These units consist of a return air section, a filter section and a supply fan. The AFU units operate in 100% recirculation mode to continuously filter the air in the Centrifuge Assembly Areas. AFUs are fitted with High Efficiency Particulate Air (HEPA) filters. LBDCR-10-0009

All AFUs are fitted with digital controls and can be operated and monitored from a central control station located inside the CAB. Each AFU can also be controlled manually using a local microprocessor located inside the AFU on the roof. Digital process sensors measure key AFU parameters such as filter differential pressure and air flow. Certain parameters are alarmed and will be displayed at the central digital control station, or in some cases, on the local microprocessor.

Air filtration for Centrifuge Assembly Area C is provided by the A/C units which serve this area. Separate AFUs for Centrifuge Assembly Area C are not provided. LBDCR-10-0009

The Centrifuge Component Storage Area HVAC System consists of five A/C units. The system flow diagram is shown on Figure 3.5-7, Flow Diagram CAB Centrifuge Component Storage Area, Assembled Centrifuge Storage Area and Server Room HVAC Systems.

One 100% A/C unit supplies conditioned air to the Centrifuge Staging Area and the West Electrical Room. Four 50% A/C units supply conditioned air to the Centrifuge Component Storage Area and the East Electrical Room.

The Centrifuge Test and Post Mortem Areas HVAC System consists of one 100% capacity A/C unit and one 100% capacity exhaust fan with a special filter unit. The system serves the Centrifuge Test and Post Mortem Areas. The Centrifuge Test and Post Mortem Exhaust Filtration System continuously filters exhaust air through an owner specified filter arrangement and discharges to the exhaust stack. This system is designed to operate in a once-through configuration. The description of this system is provided in Section 3.4.10.3, Centrifuge Test and Post Mortem Facilities Exhaust Filtration System.

The Office Area HVAC System consists of one, 100% capacity A/C . A minimum of 10% outside air is provided for ventilation. The system serves the offices, canteen, change areas, the Inspection and Test Lab, the Maintenance Area, the Air Compressor Room and entrance areas. The system flow diagram is shown on Figure 3.5-18, Flow Diagram, CAB Offices and Miscellaneous Rooms, HVAC System.

~~Each Centrifuge Assembly Area (North and South) HVAC system~~The HVAC system for Centrifuge Assembly Areas A and B consists of three 50% capacity A/C units and five recirculation AFUs. The HVAC system for Centrifuge Assembly Area C consists of five 50% capacity A/C units which also provide a filtering function. As protection of CAB investments (centrifuges and equipment) against the deleterious effects of airborne contaminants, the Centrifuge Assembly Areas will meet 14644-1 Class 8 (operational state) clean room requirements. ~~The North Centrifuge Assembly Area is~~ Centrifuge Assembly Area A and C are maintained at a positive pressure ~~W~~with respect to the outside and adjacent airlocks. ~~AFUs consist of pre-filters, medium efficiency filters, HEPA filters, and fans provided to continuously filter the Assembly Area air to cleanliness level as described above.~~ The system flow diagram is shown on Figure 3.5-9, Sheets 1 and 2 Flow Diagram Centrifuge Assembly Area, HVAC System. LBDCR-10-0009 LBDCR-10-0009

The Computer Server Rooms HVAC consist of three, 100% capacity A/C units . This subsystem is designed to operate in a recirculation configuration and is shown on Figure 3.5-15A.

Spaces in the CAB are maintained within the applicable environmental design conditions by the CAB HVAC systems. Parameters such as air temperature, relative humidity and ambient pressure are automatically monitored and controlled.

3.5.1.1.9 Cylinder Receipt and Dispatch Building Heating and Ventilation System

The Cylinder Receipt and Dispatch Building (CRDB) Heating and Ventilating System maintains room temperature in the CRDB. The HVAC system consists of ten 10% capacity AHU's and ten 10% capacity return/exhaust fans. The system components are shown on Figures 3.5-10 and 3.5-11.

The Mechanical Room and Air Compressor Area are air conditioned and heated by two split-system 100% capacity air conditioning units (ACUs). The system serving the Stand-by Diesel Generator Room does not maintain conditions when generators are running. Cooling is provided for the Electrical Rooms supporting the Standby Diesel Generators during loss of normal power. Each Diesel Generator Electrical Room is provided with one split type air conditioning unit powered by the corresponding Diesel Generator. The other Electrical Rooms are air conditioned and heated by three split-system 50% capacity ACUs. Combustion air and cooling air is provided to each Standby Diesel Generator room by screened and missile protected automatic inlet air louvers. The system components are shown on Figure 3.5-12, Flow Diagram Central Utilities Building HVAC System.

The environmental control parameters for the CUB HVAC System are provided below:

Centrifuge Cooling Water Area, Electrical Rooms/Area, Stand-by Diesel Generator Rooms, Air Compressor Area, and Battery Rooms:

Room Temperature	32°C (90°F) max/18.3°C (65°F) min
Relative Humidity	No Control

The ventilation system for the CUB Area is designed to maintain the CUB Area at neutral pressure by balancing the supply flow rate with leakage and exhaust.

3.5.1.2 Major Components

The major components for each ventilation system are detailed above in Section 3.5.1.1, System Description.

3.5.1.3 System Interfaces

HVAC systems interface with the utility systems listed below.

A. The Compressed Air System provides instrument air to pneumatic control components.

B. The Electrical System provides electrical power to HVAC system components. Split-system ACUs are provided to cool support equipment for each Standby Diesel Generators. These units receive backup power from the respective SDG.

C. The Plant Control System provides limited monitoring for the HVAC system.

3.5.1.4 Operational Characteristics

With the exception of the CAB, the HVAC systems are operated from local control panels or as in the CAB from a central control panel. Group alarms and system status are provided in the Control Room. The HVAC systems are balanced to ensure that neutral, slightly positive or slightly negative pressure is maintained depending on the specific area. Control of the CAB HVAC Systems are described in Section 3.5.1.1.~~9~~8. LBDCR-10-0009

3.5.2.5 Safety Considerations

Failure of the Electrical System will not endanger the health and safety of the public. Nevertheless, redundancy is provided in the system for reliability and to provide for investment protection.

The Electrical System is designed to minimize the combustible content of the equipment and the wiring. Transformers are dry type, and wiring is low flammability rated.

3.5.3 Compressed Air System

3.5.3.1 System Description

The Compressed Air System provides "instrument air quality" compressed air at 7 barg (102 psig) for use in instruments, controls, and equipment in the Separations Building, CUB, CRDB, and TSB. Additional, smaller compressors are located in the CAB to provide compressed air to specific equipment within these buildings. Compressed air is used to actuate pneumatic instruments and control valves, to operate pneumatic tools and for maintenance activities.

The system consists of two, packaged, air-cooled compressed air units; two air filter/dryer units; two instrument air receivers; and associated instrumentation and distribution piping. The system is illustrated in Figure 3.5-14, Process Flow Diagram Compressed Air System, Sheet 1 and Process Flow Diagram, Compressed Air Distribution, Sheet 2. The functional requirements of the Compressed Air System are provided in Table 3.5-2, Compressed Air System Design Parameters. The major components of the Compressed Air System are located in the Air Compressor Room of the Central Utilities Building (See Figure 3.3-12).

The compressor is cooled by filtered outside air. Process air is taken from inside the building, filtered, compressed, and cooled prior to drying. A filter/dryer unit removes moisture and particulates to meet instrument air specifications. Two instrument air receivers act as surge vessels and provide a reserve supply of air in the event of an upset condition.

The instrument air operating pressure is established to meet the air supply pressure required to operate UF_6 valves. System surge capacity is based on supplying instrument air to all valves in UF_6 service for six operational cycles within a period of one minute at a supply pressure of 7 barg (102 psig). Service to plant air users and HVAC instruments is discontinued during operational upsets.

The CAB Compressed Air System provides "instrument air quality" compressed air for use in instruments, controls, and equipment in the CAB. ~~The compressed air supply for the CAB has a single stainless steel receiver for each air compressor.~~ LBDCR-10-0009

3.5.3.2 Major Components

The major components and design parameters are listed below.

A. Air compressor packaged units

There are two air compressor packaged units each sized to provide the total amount of plant and instrument air required in the Separations Building Module, Central Utilities Building, and other buildings. Each packaged unit consists of an air compressor, inlet air filter/silencer, precooler, aftercooler, intercooler, moisture separators (after each cooler), and an oil separator.

B. Air filter/dryer units

There are two air filter/dryer units each sized to dry and filter the design quantity of compressed air to -40°C (-40°F) dewpoint. The duplex dryer is designed to provide continuous service and automatic regeneration. Each unit consists of an air prefilter, desiccant dryer, and an air afterfilter.

C. Instrument air receivers

There are two instrument air receivers each sized to provide the design quantity of instrument air to process valve operators at the required supply pressure for six operational cycles within a period of one minute after failure of both air compressors.

D. Breathing Air Compressor (CRDB)

This compressor train provides CGS grade D quality breathing air to personnel in various CRDB areas. This compressor has no backup. The compressor will be equipped with associated filters, coolers and appurtenances.

E. After Cooler (trim cooler for CUB compressors)

There are two aftercoolers provided, on for each CUB compressor discharge. These are trim coolers (separate from the packaged aftercoolers) designed to cool the compressed air to approximately 100 °F at the maximum discharge and room temperature/relative humidity. These coolers are not required for operation but provide additional margin for extreme high temperature conditions.

F. CAB Air Compressor Packages Units

~~There are two compressor packaged units each sized to provide normal plant and instrument air required in the CAB. Each packaged unit consists of~~There are two compressor rooms located in the CAB. One compressor room located in the second floor of the Office Area supplies the majority of the CAB air systems. A separate compressor room is located on the South side of the CAB and primarily serves Centrifuge Assembly Area C. Each compressor room contains two packaged air compressor units consisting of an air compressor, inlet air filter/silencer, after-cooler, moisture separators, and an oil separator. LBDCR-10-0009

G. CAB Air Filter/Dryer Units

~~There are~~Each CAB compressor room contains two air filter/dryer units each sized to dry and filter the design quality of compressed air to -40°C (-40°F) dew point. The duplex dryer is designed to provide continuous service and automatic regeneration. Each unit consists of an air pre-filter, desiccant dryer, and an air after-filter. LBDCR-10-0009

H. CAB Instrument Air Receivers

~~There is~~Each CAB compressor room contains one instrument air receiver sized to provide the design quality of instrument air to the CAB. LBDCR-10-0009

3.5.3.3 System Interfaces

The compressed air system interfaces with the following facility systems.

A. The HVAC System supplies cooling air to the air compressor package units

B. The Electrical System supplies power to operate the compressor motors, dryer, heater, lighting, and instrumentation.

C. The Standby Diesel Generator System supplies power to the compressor package units in case of primary power interruption.

3.5.3.4 Operational Characteristics

The CUB Compressed Air System is normally operating and is designed to provide uninterrupted operation. The CAB air compressors are not supplied with standby power.

3.5.3.4.1 Routine Operation

The Compressed Air System is designed to provide a reliable and continuous supply of compressed air for plant and instrument use. During normal operation, both compressors operate at partial load. The system is designed to automatically respond to changes in instrument air demand by adjustment of compressor operating capacity. The functional requirements of the Compressed Air System are provided in Table 3.5-2.

At design conditions, outside air provides the cooling air while room air, separate from the cooling air flow, is drawn through the compressor inlet air filter/silencer. Actual rate of air intake depends on system air demand and is adjusted by the packaged unit capacity controller. The inlet air is, compressed with a rotary screw compressor, and cooled prior to drying in the system filter/dryer unit. Condensed water vapor is collected in moisture separators associated with the compressed air aftercooler. The compressor package unit will contain an oil separator to assure oil-free instrument air. An air cooled trim cooler is provided downstream of the air compressor discharge for additional temperature margin during extreme hot weather conditions.

The compressed air is prefiltered and dried in a duplex self-regenerating desiccant dryer to a dew point of –40°C (-40°F) and is again filtered to prevent desiccant carryover. The flow of dried instrument air is split between two instrument air receivers. Critical and non-critical instrument air is distributed through ring headers in each Separations Building Module at 13 barg (188.5 psig) pressure. Pressure regulating valves in each Separations Building Module reduce the operating pressure to 7 barg (102 psig) for distribution to users.

3.5.3.4.2 Non-Routine Operation

The Compressed Air System is designed with equipment redundancy to ensure continuous operation. If mechanical repairs are required on an air compressor packaged unit, the unit is isolated and the other unit continues to operate. The drying unit also has a spare, and one unit may be isolated to perform maintenance, repairs, or desiccant replacement during normal operation.

3.5.4.1.2 Major Components

The Process Water System consists of two backflow preventers, one electric water heater, associated piping, valves, and instrumentation. The system also includes three 946350 L (250000 gal) storage tanks. One Process Water Storage Tank provides the normal supply to the Process Water system. Two Fire and Process Water Storage Tanks are capable of supplying the Process Water system if the Process Water Storage tank is unavailable. The bottom of each Fire and Process Water Storage Tank is used for fire water storage. The piping is connected so that it is impossible to use dedicated fire water for process water. Additional equipment includes one process water pump with a 100% spare and associated piping, valves, and instrumentation.

3.5.4.1.3 System Interfaces

The Process Water System interfaces with the following systems.

A. The Process Water System provides ~~initial fill and makeup~~ water to the Centrifuge Cooling Water Systems after being processed by a water purification system~~, and the DI Water Supply and Distribution System~~. LBDCR-10-0018

B. The Process Water System provides ~~initial fill and makeup~~ water to the standby diesel generator cooling systems after being processed by a water purification system.

C. The Process Water System supplies the Decontamination System, the Liquid Effluent Collection and Treatment System (general washdown and tank flushing), various wash-down areas, and yard and construction services.

D. The Electrical System provides power for the electric water heaters.

3.5.4.1.4 Operational Characteristics

A major piping failure in the Process Water System would not affect essential services. The Centrifuge Cooling Water System and the Fire Water System have sufficient storage capacity to perform basic functions without receiving makeup water from the city water system for up to 48 hours.

3.5.4.1.5 Safety Considerations

Failure of this system does not endanger the health and safety of the plant personnel or the public. A sufficient storage capacity is provided for all essential users such that failure of the Process Water System would not affect the performance of essential services over a reasonable period of time.

3.5.4.2 Potable Water System

3.5.4.2.1 System Description

The Potable Water System provides potable quality water from a reliable water source to users throughout the facility.

~~**3.5.4.3*See 4.3 D.)* Deionized Water Supply and Distribution System**~~ LBDCR-10-0033

~~Deionized (DI) water is produced on site. A single DI Water Supply and Distribution System provides DI water to the Centrifuge Cooling Water Distribution System of each Separation Building Module, to the laboratory users, to the Liquid Effluent Collection and Treatment System areas, and to the Decontamination Workshop areas in the CRDB.~~

~~3.5.4.2.6System Description~~

~~A single DI Water Supply and Distribution System is located in the CUB. The system consists of a raw water supply tank, a DI water storage tank, supply pumps, water purification system, and associated piping and instrumentation. This equipment serves each Separations Building Module and the DI water users in the CRDB. The DI Water Make-up System operates on an intermittent basis, while the DI Water Distribution System operates continuously. The system flow diagram is shown on Figure 3.5-16, Process Flow Diagram, DI Water Supply and Distribution System. The functional requirements of the DI Water Supply and Distribution System are provided in Table 3.5-4, Deionized Water Supply and Distribution System Design Parameters.~~

~~3.5.4.2.7Major Components~~ LBDCR-10-0018

~~The DI water system consists of a Raw Water Storage tank (1893 L or 500 gal minimum), supply pumps, water purification system, a DI Water Storage Tank (1893 L or 500 gal minimum), associated piping, valves, and instrumentation.~~

~~3.5.4.2.8System Interfaces~~

~~The DI Water Supply and Distribution System interfaces with the following plant systems.~~

~~A. The Process Water System supplies make up water for the DI Water Supply System.~~

~~B. The DI Water Supply and Distribution System provides fill and make up water to the Centrifuge Cooling Water Distribution Systems, laboratories, and the liquid effluent systems.~~ LBDCR-10-0018

~~C. The Electrical System provides power to operate the pump, ultraviolet sterilizers, lighting, and instrumentation in the DI Water Supply and Distribution System.~~

~~D. The Compressed Air System supplies instrument air to actuate instruments and control valves in the DI Water Supply and Distribution System.~~

~~E. The Nitrogen System provides nitrogen for tank blanketing.~~

~~An additional interface of this system is with the outside supplier of the replaceable deionizer vessels. The deionizers are delivered by truck as required.~~

~~3.5.4.2.9Operational Characteristics~~

~~The DI Water Supply and Distribution System operates intermittently for the make up system, and the distribution system operates continuously to fill and make up DI water to the expansion vessels in the Centrifuge Cooling Water Distribution System, and to the other users of DI water.~~

~~3.5.4.2.9.1Routine Operation~~

~~The Process Water system supplies make up to the DI water system raw water storage tank. Water from the Raw Water Tank is pumped to the Water Purification System and to the DI water storage tank. DI water is pumped from the DI water storage tank to the loop serving the Centrifuge Cooling Water Distribution System expansion vessel in the SBMs. The inlet control valve for the expansion tank is automatically opened and closed by a signal from a level control on the Centrifuge Cooling Water Distribution System expansion vessels.~~

~~The supply of DI water from the anion deionizer is monitored and alarmed for specific conductivity, alerting the plant staff of the need to replace the cation-anion vessels.~~

~~3.5.4.2.9.2 Non-routine Operation~~

~~The following non-routine operations are considered:~~

LBDCR-10-0018

~~A. Empty DI water storage tank. A low level shutdown switch on the storage tank protects the DI water loop supply pump from this condition.~~

~~B. DI water loop supply pump discharge line and minimum flow line isolated. The pump could be operated in a blocked-in condition that could result in pump damage. An operator would be alerted to this condition when the loop supply flow rate fails to meet design flow conditions.~~

~~C. DI water storage tank level control signal failure. This could result in continued make up water flow to the DI water storage tank after the tank level is established. If the inlet control valve is not closed, make up water will spill out of the tank overflow.~~

~~D. Centrifuge Cooling Water Distribution System expansion tank level control signal failure. This could result in continued make up water flow to a Centrifuge Cooling Water Distribution System expansion vessel after the vessel level is established. If the inlet control valve is not closed, DI water will spill out of the vessel overflow.~~

~~The DI Water Supply and Distribution System does not have redundant components or a backup power supply because its function is non-essential.~~

~~3.5.4.2.10Safety Considerations~~

~~Failure of the DI Water Supply and Distribution System does not endanger the health and safety of the plant personnel or the public.~~

~~**3.5.4.3Not Used**~~

LBDCR-10-0033

3.5.5 Cooling Water Systems

3.5.5.1 (~~*See*~~ *See SAR § 12.1.3.1~~4.3 E.~~)* Centrifuge Cooling Water System

LBDCR-10-0033

The Centrifuge Cooling Water System (CCWS) provides cooling water to the centrifuge cooling jacket coils, thus maintaining the required centrifuge operating temperatures necessary for efficient isotope separation.

B. The Compressed Air System supplies instrument air to actuate the cooling tower water system control valves and instruments.

C. The Process Water System supplies makeup water to the centrifuge cooling tower water basins.

D. The ~~DI Water~~Process Water System, after being processed by a water purification system, supplies makeup water to the Centrifuge Cooling Water System. LBDCR-10-0018

E. The Electrical System supplies power to operate the air cooled chillers, cooling towers, primary and secondary water pumps, condenser water pumps, lighting, and instrumentation.

F. Supplemental cooling will be supplied to augment the normal cooling water from the towers during extreme hot weather conditions.

3.5.5.1.4 Operational Characteristics

During normal operation, the Centrifuge Cooling Water System provides a continuous supply of cooling tower water to process centrifuge users. The temperature of the cooling tower water is maintained at 28.0°C (82.5°F).

3.5.5.1.4.1 Routine Operation

The cooling tower water supply temperature is maintained at 28.0°C (82.5°F). Multiple towers are provided to accommodate fluctuating process cooling loads. In addition, a heat exchanger cooled by two air cooled chillers is available to provide additional cooling during periods of peak heat loads.

3.5.5.1.4.2 Non-routine Operation

The Centrifuge Cooling Water System is designed with redundancy to provide maximum reliability. The consequences of potential failure modes are discussed below.

The primary functional requirement of the Centrifuge Cooling Water Distribution System is to provide a heat sink for the heat load produced by centrifuges in each Separations Building Module. Additionally, since the plant will be brought online incrementally the cooling towers may not be utilized for First Cascade Online. A bypass line has been installed to isolate the cooling towers at this point and allowing the chiller units associated with the Centrifuge Cooling Water System to provide the initial cooling. When the cooling towers become available or the heat load of the enrichment plant is high enough so that the cooling towers will be necessary the Centrifuge Cooling Water System will be lined up to direct flow through the cooling towers.

CCWS initial fill may be accomplished by using an outside source via, tanker truck rather than DI system. Hose connection with 6" isolation valve is provided for this purpose. The system is normally filled with DI water from ~~the DI Water Distribution~~a water purification System. LBDCR-10-0018

3.5.5.2.2 Major Components

A. Cascade circulation pumps. The cascade circulation pumps are sized to provide sufficient flow to each cascade to meet heat removal requirements.

Materials of construction are selected to be compatible with the highly corrosive DI water and with the aluminum cascade cooling coils.

3.5.5.2.3 System Interfaces

The Centrifuge Cooling Water Distribution System interfaces with the following plant systems:

A. Centrifuge cooling water is supplied to the Cascades.

B. The Centrifuge Cooling Water System supplies process cooling water used to cool the Centrifuge Cooling Water Distribution System.

C. The ~~DI Water Supply and Distribution~~Process Water System, after being processed by a water purification system, supplies make up DI water to the Centrifuge Cooling Water Distribution System. LBDCR-10-0018

D. The Compressed Air System supplies instrument air to actuate instruments and control valves in the Centrifuge Cooling Water Distribution System.

E. The Electrical System provides power to operate cascade circulation pumps and instrumentation.

3.5.5.2.4 Operating Characteristics

This system operates continuously and is designed to provide highly reliable operation. In the event the UF_6 flow through a centrifuge or cascade is interrupted, the Centrifuge Cooling Water Distribution System continues operating without need for shutdown.

3.5.5.2.4.1 Routine Operation

This system is designed to provide high reliability and operate continuously to remove heat from the centrifuges. The system operates within a tightly controlled temperature range. Temperatures are closely regulated to ensure the efficiency of isotope separation.

The flow is split evenly between the two cascade halls in each Separations Building Module, and then again among the centrifuge cascades in each cascade hall.

Centrifuge Assembly Building Nitrogen package unit. The liquid nitrogen storage tank (Vertical, double walled 22712 L (6000 gal)) is sized to supply at least 30 days of nitrogen without refill based on normal operating conditions. The unit consist of the following components:

Distribution Piping. Vacuum insulated cryogenic piping is used for the liquid transfer lines. Gaseous nitrogen lines are fabricated from carbon steel or copper.

3.5.11.3 System Interfaces

The Nitrogen System interfaces with the following plant systems.

A. The Cascade System uses gaseous nitrogen for blanketing centrifuges and cascades during construction. Liquid nitrogen is supplied to mobile pump sets.

B. The UF_6 Feed System uses gaseous nitrogen to blanket the insulation box at the UF_6 cold trap unit and purge distribution piping at the feed cylinders.

C. The Product Take-off System uses gaseous nitrogen to blanket the insulation box at the UF_6 cold trap unit and purge distribution piping at the product cylinders.

D. The Tails Take-off System uses gaseous nitrogen to purge distribution piping at the Uranium Byproduct Cylinders (UBCs).

E. The Product Liquid Sampling System uses gaseous nitrogen to purge the sample manifold in each Product Liquid Sampling Autoclave. The Product Liquid Sampling Autoclaves are also pressurized with gaseous nitrogen.

F. Nitrogen is also used for purging in pump replacement operations and in other miscellaneous process gas system maintenance operations, e.g. valve replacement.

G. The Electrical System provides power to the instrumentation in the Nitrogen System.

~~H. The DI water storage tank uses nitrogen for blanketing.~~ LBDCR-10-0018

~~I.~~H. The cylinder pressure test and pump out system in the ventilated room of the CRDB uses gaseous nitrogen for testing and purging.

~~J.~~I. The Mass Spectrometry, Environmental Monitoring and Chemical Labs use gaseous nitrogen.

~~K.~~J. Nitrogen is used within the Centrifuge Assembly Building during assembly, testing, and purging of centrifuges.

3.5.11.4 Operational Characteristics

The Nitrogen System is designed to supply liquid and gaseous nitrogen on demand.

3.5.11.4.1 Routine Operation

Liquid nitrogen is delivered to the four outside liquid nitrogen storage tanks by truck. Liquid nitrogen is transferred from the outside storage tanks through vendor-supplied double wall vacuum insulated cryogenic piping to one dispensing station located outside of the Separations Building, and one each for the TSB/CRDB and CAB. Portable Dewars are filled at the dispensing station and are used to transport the liquid nitrogen to the points of use. Gaseous nitrogen is generated by vaporizing liquid nitrogen through an ambient air vaporizer. Two vaporizers are provided to assure continued production of gaseous nitrogen when one vaporizer is being defrosted. A pressure regulator prevents storage tank over-pressure by releasing tank boil-off nitrogen to the gaseous nitrogen distribution piping. A pressure build-up coil maintains nitrogen storage tank pressure for transfer of liquid nitrogen.

Storage tank back pressure control valves vent excess nitrogen to the atmosphere in the event that tank boil off rate exceeds nitrogen consumption. Safety relief valves are provided to protect against tank over-pressurization. Relief valves are also provided in the distribution piping.

Switching valves divert liquid nitrogen to spare vaporizers during defrost cycles, and a manual valve is provided at the liquid nitrogen dispensing station for filling Dewars.

Pressure regulating valves in gaseous nitrogen supply lines maintain distribution pressure. There are four subsystems designed to distribute gaseous nitrogen. The distribution is shown on Figure 3.5-19.

3.5.11.4.2 Non-routine Operation

A. Equipment Failure. This system is not considered critical to facility operation and spare components are not installed. Dual vaporizers permit continuous production of gaseous nitrogen and provide some redundancy in the event of failure of one of the vaporizers. A small inventory of liquid nitrogen is available from the Dewars in the event of an interruption of the liquid nitrogen transfer line. The four tanks add redundancy.

B. Instrument Failure. Instrument failure may lead to over-pressurization of the liquid nitrogen storage vessel. A pressure relief valve is provided on the tank to protect against over-pressurizing the tank.

C. Instrument Air Failure. Instrument air failure does not affect this system.

D. Instrument Failure. Instrument failure of system or header regulators could cause overpressurization of the gaseous system. Multiple relief valves are provided to protect against overpressure.

3.5.11.5 Safety Considerations

Failure of this system will not endanger the health and safety of the plant personnel or the public.

3.5.12 ~~(See 4.3 L)~~ Liquid Effluent Collection and Treatment System

LBDCR-10-0033

Various types of aqueous and non-aqueous liquid wastes are generated in the facility. These effluents may be contaminated, potentially contaminated with low amounts of contamination, or non-contaminated.

A. Decontamination Workshop. The spent citric acid waste and the spent degreaser water are pumped from this system to their respective tanks in the Liquid Effluent Collection and Treatment Room. Small amounts of floor washings from this area are also collected in the Miscellaneous Effluent Collection Tank.

B. Compressed Air System. This system provides air for any diaphragm pumps that may be used in the Liquid Effluent Collection and Treatment System in addition to any requirements for instrumentation or pneumatic controls in the room.

C. ~~Deionized Water Supply Distribution~~Process Water System. ~~The~~After being processed by a water purification system, the DI water is used for rinsing out the tanks and pumps in the system to prevent potential sludge build-ups. LBDCR-10-0018

D. Solid Waste Collection System. Solid waste from the filter press, centrifuge, and evaporator is collected in containers. This tank collects and handles other solid wastes, such as cloths and rags, and ensures that it is disposed of offsite appropriately.

E. Separations Building. Small amounts of floor washings and miscellaneous condensates from this area are collected in the Miscellaneous Effluent Collection Tank.

F. Ventilated Room. Small amounts of floor washings from this area are collected in the Miscellaneous Effluent Collection Tank.

G. Vacuum Pump Rebuild Workshop. Small amounts of floor washings from this area are collected in the Miscellaneous Effluent Collection Tank.

H. UF_6 Handling Area. This area of the facility containing UF_6 has small amounts of floor washings that are collected in the Miscellaneous Effluent Collection Tank.

I. Personnel Hand Wash and Shower Areas. Effluent water is generated from employees who work in contaminated areas washing their hands and taking showers after dealing with contaminated materials. This is not expected to be contaminated effluent.

J. Treated Effluent Evaporative Basin. Receives treated and non-contaminated effluent from the Liquid Effluent and Treatment System.

K. Air Cooled Chillers System is used to condense the vaporized effluent downstream of the evaporator.

L. Electrical System. Power is required for the process for some of the equipment and instrumentation.

M. Laboratories. Liquid effluent from the Chemical Laboratoryand the Mass Spectrometry Laboratory are collected in the Miscellaneous Effluent Collection Tank.

3.5.12.1.4 Safety Considerations

Equipment for effluent collection and treatment in the Liquid Effluent Collection and Treatment Room in the CRDB are separated into various radiological zones depending on contamination levels. The Wash/Shower Tanks are generally non-contaminated (or contain very low levels of uranium) and are located together in one corner of the room. The tanks with higher contamination are located in the opposite corner of the room. This separation helps keep exposures to ALARA (as low as reasonably achievable.) All tanks have overflow piping and atmospheric vents. The tanks also have inspection hatches to ensure that they are completely empty after a batch has been processed.

3.5.12.1.5 Operating Characteristics

The uranium content of tanks is important to prevent a criticality accident. None of the tanks in the collection and treatment system are "geometrically safe" or "geometrically favorable". Administrative controls (by mass) are applied to prevent a criticality accident.

The pH of the Dryer Feed Tank is important to minimize the corrosion in the equipment. The pH is always maintained within the manufacturer's recommended range.

Aqueous radiologically contaminated liquid effluents are processed on-site to remove the uranic content. After treatment these effluents and all non-contaminated aqueous effluents are discharged to the TEEB. Reduced volume, radiologically contaminated wastes that are produced as a by-product of the treatment system, as well as contaminated non-aqueous wastes, are packaged and shipped to a licensed radioactive waste disposal facility.

3.5.12.2 Non-Aqueous Liquid Effluents

Various non-aqueous liquid effluents are generated throughout the plant. The majority of these are non-radiologically contaminated and are generated outside areas in which radioactive materials are handled. A small percentage may be radiologically contaminated. These wastes are ones that cannot be collected and treated in the Liquid Effluent Collection and Treatment System because of their chemical characteristics (i.e., they cannot be processed through the system because they might damage or decrease the performance of the equipment in the treatment system). These chemicals also might be EPA hazardous chemicals that cannot enter the aqueous waste stream that goes to the TEEB. Special treatment and/or disposal methods are required for these wastes. They are not mixed with any of the effluent streams in the Liquid Effluent Collection and Treatment System.

3.5.12.2.1 System Description

Non-aqueous liquid wastes are generated throughout the plant. These wastes are collected, identified, and temporarily stored in a waste storage area. Appropriate containers are used for storage of all wastes to preclude leakage, intermixing, evaporation, and spillage. To preclude a criticality accident, ~~A~~all potentially radioactive wastes are stored in ~~a criticality safe manner~~accordance with approved procedures that incorporate appropriate criticality safety controls ~~to preclude a criticality accident~~. LBDCR-10-0012

The non-aqueous portion of the liquid effluent system arises from the following areas:

- Radiologically contaminated solvents from Chemical Laboratory and the Decontamination Workshop.
- Non-radiologically contaminated effluents from the General Mechanical, Electrical and Instrumentation Workshop, Diesel Generator Area, CUB, CAB, and the Laboratories.

The following non-aqueous liquid wastes are collected, packaged, stored and disposed of:

All process piping is designed in accordance with American Society of Mechanical Engineers, ASME B31.3, Process Piping. To provide system integrity and prevent leaks, welded construction is used everywhere practical. All collection tanks are designed in accordance with American Water Works Association (AWWA), American Petroleum Institute (API), or ASME Standards. The tanks are vertical cylindrical tanks with conical or dished-head bottoms to promote drainage. All outlets are at the low point of the tank – no space exists for solids to accumulate. All tank vents are open to atmosphere and directed away from personnel/equipment; all tank overflows are directed to sumps or do not pose a serious hazard. All tanks have inspection hatches to ensure the tanks are emptied. Mixers or recirculation loops are provided for each tank that requires mixing prior to sampling to ensure that each sample is representative of the tank contents.

None of the tanks are "geometrically safe" or "geometrically favorable." Criticality is controlled by administrative controls. The entire system is designed so that all operation and maintenance activities can be performed while keeping personnel radiation exposures ALARA.

3.5.13 *(See SAR § 12.1.3.3~~4.3 M.~~)* Solid Waste Collection System

LBDCR-10-0033

Solid wastes are produced in a number of plant activities and require a variety of methods for treatment and disposal. Solid wastes are categorized into wet solid waste and dry solid waste due to differences in handling, storage, and disposal requirements. For disposal of solid waste (radioactive waste and mixed waste), 10 CFR 61.56(a)(3) (CFR, 2003a) requires: "Solid waste containing liquid shall contain as little free standing and noncorrosive liquid as reasonably achievable, but in no case shall the liquid exceed 1% of the volume." For this facility, dry solid waste is waste that meets the requirement in its as-generated form and wet solid waste is waste that requires treatment prior to disposal to meet this requirement.

The Solid Waste Collection System is simply a group of methods and procedures, all applied as appropriate to the various solid wastes. Each individual waste is handled differently according to its unique combination of characteristics and constraints. Wet and dry solid wastes are described separately below.

3.5.13.1 Wet Solid Wastes

The wet waste portion of the Solid Waste Collection System handles all radiological, hazardous, mixed, and industrial solid wastes from the plant that do not meet the above definition of dry solid waste. The system assures the waste is properly handled, stored, and disposed of for the protection of the public, the plant workers, and the environment.

3.5.13.1.1 System Description

The Solid Waste Collection System handles several different types of wet solid waste: wet trash, oil recovery sludge, oil filters, resins, degreaser sludge, and uranic waste precipitate. The system collects, identifies, prepares, records, and stores these wastes for shipment.

Wet solid wastes that are generated in the plant are divided into radioactive, hazardous, mixed, or industrial waste categories. Mixed waste is that which includes both radioactive and hazardous waste. Industrial waste does not include either radioactive or hazardous waste. Each waste category is segregated during collection, during packaging for shipment, and in storage.

This system, primarily consisting of a number of manual steps, has no major components. Minor components, such as container assay equipment, a container compactor, and a container weigh scale, are employed when appropriate for packaging of waste in the SWCR of the CRDB.

3.5.13.1.2 Interfaces

The wet solid waste portion of the Solid Waste Collection System interfaces with the PFPE Oil Recovery System and the Liquid Effluent Collection and Treatment System. Handling of each waste type is described below.

3.5.13.1.2.1 Wet Trash

In this facility, trash typically consists of waste paper, packing material, clothing, rags, wipes, mop heads, and absorption media. Wet trash consists of trash that contains water, oil, or chemical solutions.

Generation of "radioactive" wet trash is minimized as much as possible. Trash with radioactive contamination is collected in specially marked plastic-bag-lined drums. These drums are located in ~~Restricted Areas~~a Radiologically Controlled Area (RCA) as necessary. Wet trash is collected in separate drums from dry trash. When a drum of wet trash is full, the drum is then taken to the SWCR. The plastic bag is removed from the drum and sealed. The bag is then checked for leaks and excessive liquid, and the exterior is monitored for contamination. If necessary, excess liquids are drained and the exterior is cleaned. The trash is identified, packaged, labeled, and recorded. Collected radioactive trash is stored in an appropriate container in the SWCR until it can be shipped offsite for treatment and then disposal. LBDCR-10-0042

The radioactive trash is shipped to a Central Volume Reduction Facility (CVRF) that can process wet trash. The licensed CVRF reduces the volume of the trash and then repackages the resulting waste for disposal. The waste package is then shipped to a licensed radioactive waste disposal facility.

Trash with "hazardous" (CFR, 2003b) contamination is collected in special plastic bag-lined drums. When full, the drum is taken to the SWCR, the plastic bag containing wet trash is removed from its container, sealed, the exterior monitored for hazardous material, and the exterior cleaned if necessary. The trash is identified, packaged, labeled, and recorded. All hazardous trash is stored in the SWCR until it is shipped to a licensed hazardous waste disposal facility. To prevent accidental reactions, different types of hazardous materials are not mixed together.

Empty containers (CFR, 2003c) that at one time contained hazardous materials are considered waste if designated such by administrative guidelines. After such a container is emptied, it is resealed and taken to the SWCR for identification, labeling, and recording. The container can be handled as if it is hazardous waste and be shipped to a licensed hazardous waste processing facility for cleaning and/or disposal. Otherwise, the container is used to store compatible hazardous waste and to ship that waste to a licensed hazardous waste processing facility for processing and container disposal.

A common manifold connects the sample piping in each station to vacuum pumps via UF_6 cold traps. Three vacuum pumps are mounted on the unit base. For initial system pump down and to remove moisture, a set of two pumps in series is used. For normal operation of the unit a single pump installed in parallel to the dual pump set is used. The vacuum pumps exhaust into the fume collection exhaust hood.

Dual UF_6 cold traps, connected in series, precede the vacuum pumps. The UF_6 cold traps are cooled using liquid nitrogen in Dewar flasks. UF_6 in the exhaust gas is desublimed in the UF_6 cold traps before being exhausted through the vacuum pump.

3.5.18.3 Interfaces

The Chemical Laboratory interfaces with the following systems and utilities.

A. Samples are received from throughout the plant

B. CRDB GEVS

C. CRDB Laboratory HVAC System

D. Nitrogen System

E. Compressed Air System

F. ~~Potable~~ Process Water System (including water processed by a water purification system to produce DI water)

~~G. Deionized Water Supply and Distribution System~~

~~H~~G. Electrical System

~~I~~H. Liquid Effluent Collection and Treatment System LBDCR-10-0018

~~J~~I. Solid Waste Collection System.

3.5.18.4 Safety Considerations

Failure of this system (laboratory accidents) will not endanger the health and safety of the public. Nevertheless, design and operating features are included that contribute to the safety of plant workers. Wastes are contained in designated containers and the air filtration systems. Criticality is precluded through the control of geometry and mass of fissile materials. To minimize worker exposure, airborne contamination resulting from laboratory operations is exhausted through the CRDB GEVS. Operation of CRDB GEVS connected to the chemical hood is required to establish airflow away from the worker when the UF_6 sub-sampling unit is operated.

A UF_6 cold trap high temperature interlock to close the Cold Trap No. 2 valve is provided in line to sub-sampling rig vacuum pump. This hard-wired single train, fail-safe, feature functions to prevent flow of UF_6 to the CRDB GEVS in the event the associated UF_6 cold trap is above an adequate desublimation temperature.

A high temperature trip of the UF_6 sub-sampling Unit hot box heater is also provided. This automatic, fail-safe, feature functions to trip the hot box heaters at the UF_6 sub-sampling Unit on high hot box internal temperature to ensure sample bottle integrity.

"Mixed" (CFR, 2003b) trash results from using wipes and rags with solvent on uranium-contaminated components. It is collected in appropriate containers and segregated from other trash. The waste is identified, packaged, labeled, recorded, and stored in accordance with regulations for both hazardous and radioactive wastes. Mixed waste is shipped to a facility licensed to process mixed waste. Waste resulting from the processing by the licensed facility is then forwarded to a qualified disposal facility licensed to dispose of the particular resulting waste.

"Industrial" trash is collected in specially marked receptacles in all parts of the plant. Trash that contains free liquids is dewatered before it is put into a receptacle. The trash from ~~the Restricted Area~~an RCA is collected in plastic bags and taken to the SWCR for inspection to ensure that no radioactive contamination is present. The inspected trash and the trash from outside ~~Restricted Area~~ an RCA are then taken to one of several dumpsters around the plant. The trash is stored in these dumpsters until it is transported to a local landfill by a contract carrier. LBDCR-10-0042 LBDCR-10-0042

3.5.13.1.2.2 Oil Recovery Sludge

The recovery process for PFPE oil generates an oily sludge which is handled by this system. The sludge results from the removal of uranium and hydrocarbons from PFPE (perfluorinated polyether) oil. Sodium carbonate, charcoal, and celite contribute to this sludge. A contracted radioactive waste processor will process the waste at an off-site location. Alternatively, the waste may be shipped offsite to a licensed CVRF for volume reduction. Regulations and technology current at the time of waste production will dictate treatment methods. In either case the waste is disposed of at a licensed low-level radioactive waste disposal facility.

3.5.13.1.2.3 Oil Filters

Used oil filters are collected from the diesel generators and from facility vehicles. No filters are radioactively contaminated. The used filters are placed in containers and transported to the SWCR. There the filters are drained completely and transferred to a drum. The drained waste oil is drummed with other non-radioactive waste oil and handled appropriately. Once a drum is full of spent filters, absorbent material is added and the drum is sealed and labeled. The drums are shipped to an appropriate off-site licensed waste disposal contractor.

3.5.13.1.2.4 Resins

Spent ion exchange resin is collected from the Centrifuge Cooling Water Distribution System polishers. These resins are not radioactively contaminated. The spent resins are received, used, dewatered, and returned to an independent contractor for regeneration or disposal under a lease agreement.

Radioactively contaminated resin is collected from the Liquid Effluent Collection and Treatment System deionizers. Normally, the resins for deionizer operation are contained in a portable vessel suitable for disposal by the lease contractor. The vessel is disconnected, dewatered, sealed, and stored in the SWCR. The vessel of resin is shipped to a contractor for disposal in a licensed low-level radioactive waste disposal facility.

3.5.13.2.2.5 Filter Elements

Prefilters and HEPA filters are used in several places throughout the plant to remove dust and dirt, uranium compounds, andHF.

Filters associated with the HVAC System in the Centrifuge Assembly Building remove dust and dirt from the incoming air to ensure the cleanliness of the centrifuge assembly operation. When removed from the housing, the filter elements are wrapped in plastic to prevent the loss of particulate matter. These filter elements are not contaminated with radioactive or hazardous materials so disposal is with industrial trash.

Filters used in the GEVS, and the Centrifuge Test and Post Mortem facilities Exhaust Filtration System and the filters supporting the confinement function of the CRDB HVAC System remove HF and trace uranium compounds from the exhaust air stream. When the filter elements become loaded, they are removed from the housings and wrapped in plastic bags to prevent the spread of radioactive contamination. Due to the hazard of airborne contamination, bag-in-bag-out type filter housings are used. Additionally, either special ventilation equipment or personal protective clothing and respiration equipment is used during filter element handling to prevent contamination of plant personnel. The filter elements are taken to the SWCR where a sample is taken to determine the quantity of ^{235}U present. The exterior of the bag is monitored for contamination and the package is properly marked. The filter elements are sent to a licensed CVRF for processing and then shipped to a licensed low-level radioactive waste disposal facility.

The filter elements used in these units are handled as described immediately above for the GEVS filter elements.

The filter elements are handled as industrial trash unless the ventilation unit is used in ~~a Restricted Area~~an RCA. These filter elements are removed from the unit, wrapped in plastic, and taken to the SWCR to be sampled for uranium compounds. If they are found to be non-contaminated they are handled as industrial trash. If they are found to be contaminated they are handled as described above for the Gaseous Effluent Vent System filter elements. LBDCR-10-0042

Air filters from the Non-Contaminated HVAC Systems, Compressed Air System, and the Diesel Generators are handled as industrial waste.

3.5.13.2.2.6 Scrap Metal

Metallic wastes are generated during routine and abnormal maintenance operations. The metal can be either clean, can be contaminated with radioactive material, or can contain hazardous material. Radioactive contamination of metal is always in the form of surface contamination caused by uranium compounds adhering to the metal or caught in cracks and crevices. No process in this facility results in activation of any materials.

Clean scrap metal is collected in bins. This material is transported by contract carrier to a local scrap metal vendor for disposal. Items collected outside of Radiation Areas are disposed of as industrial scrap metal unless there is reason to suspect it contains hazardous material.

Scrap metal is monitored for contamination before it leaves the site. Any metal found to be contaminated is either decontaminated or disposed of as radioactive waste. When feasible, decontamination is the preferred method.

procedural controls, and by systematic inspections of waste materials. Onsite spills, if they occur, remain contained within ~~Restricted Areas~~RCAs. Shipment of wastes offsite strictly adheres to regulations for packaging and transportation. The mass limit of fissile material prepared for offsite shipment shall not exceed the fissile material limits of 10 CFR 71 (CFR, 2003f). Appropriate protective clothing and respiratory equipment is required for plant workers depending on the material being handled. LBDCR-10-0042

Controls on shape, mass, areal density, and selection of waste containers prevent criticality events. LBDCR-10-0012

In addition, MONK8A (SA, 2001) calculations were performed for a single 12 L (3.2 gal) residue container holding charcoal/uranyl fluoride/water mixture over a range of H/U ratios. The container was modeled as an equiaxed cylinder of radius 12.4 cm (4.9 in) and height 24.8 cm (9.8 in) which was placed on a 20 cm (7.9 in) thick concrete layer with reflection beneath the lower face to simulate infinite depth of concrete. The cylinder volume was completely filled with the charcoal/uranic mixture. A 2.5 cm (0.984 in) thick water layer enclosed the cylinder sides and top surface. At the optimum H/U ratio of 24, the value of k_{eff} is 0.7025 compared with a maximum value for k_{eff} of 0.8570 for an isolated 12 L (3.2 gal) cylinder of oil/UF4 mixture. This indicates that the charcoal mixture will be safe when stored in 12 L (3.2 gal) containers.

For the array, a 5x5 horizontal array of cylinders was modeled explicitly with an additional container in contact with the center cylinder of the 5x5 unit to simulate accidental movement of an extra container into a storage array. The containers were modeled resting on a 30 cm (11.8 in) thick concrete layer and a 2.5 cm (0.984 in) water reflector was placed around each container. The uranic/oil mix was at an H/U ratio of 21. The value of k_{eff} obtained for the array model was 0.9281.

Therefore, arrays of up to 5x5 12 L (3.2 gal) containers containing chemical absorber material are therefore safe under worst-case conditions with 60 cm (23.6 in) spacing between containers.

3.5.14 (*See SAR 12.1.3.~~44.3 N.~~*) Decontamination Workshop

LBDCR-10-0033

The Decontamination Workshop is located in the CRDB. The decontamination systems in this workshop are designed to remove radiation from contaminated materials and equipment used in uranium hexafluoride systems, waste handling systems, and miscellaneous other areas of the plant. Space is provided to break down and strip contaminated equipment prior to decontamination. The workshop is also used for the temporary storage and dismantling of failed equipment.

The only significant forms of radioactive contamination found in the facility are uranium hexafluoride (UF_6), uranium tetrafluoride (UF_4), and uranyl fluoride (UO_2F_2).

3.5.14.1 System Description

The Decontamination System has three basic subsystems:

- Equipment decontamination
- Sample bottle and valve decontamination
- Flexible hose decontamination

1. Degreaser Tank with: an electric heater, ultrasonic agitator, recirculation pump, associated pipework and valves, instruments and controls, and water spray system.
2. Citric Acid Tank with: an electric heater, ultrasonic agitator, recirculation pump, associated pipework and valves, instruments and controls, and water spray system.
3. Two Rinse Water Tanks each with: an electric heater, ultrasonic agitator, recirculation pump, transfer pump, associated pipe work and valves, instruments and control.
4. Monorail hoist.
5. Citric Acid Tank and Degreaser Tank clean-up ancillary items, each with: portable transfer pump and associated equipment.

E. Exhaust system with ductwork connected to the GEVS, where required, and general HVAC system for the room.

F. Sample Bottle Decontamination Cabinet - a small citric acid tank (for a fresh solution); a small DI water tank; a pump and associated equipment; a small citric acid tank (for fresh and waste solutions) for washing the valves; and 5-L (1.3 gal) containers for citric acid/uranic waste.

G. Flexible Hose Decontamination Cabinet - a small citric acid tank (for fresh and waste citric acid), a small DI water tank, and two pumps and associated equipment.

3.5.14.3 Interfaces

The Decontamination Workshop interfaces with the following other plant systems and areas:

A. CRDB GEVS. This system in the CRDB pulls a vacuum to capture contaminated or hazardous vapors locally from the decontamination cabinets, the stripping tables, and the Outgas Area.

B. PFPE Oil Recovery System. This system receives the contaminated oil drained from the pumps.

C. Potable Water System. This system provides the water for the hand wash sinks in the People Air Lock.

D. Compressed Air System. Compressed air is used in the decontamination process for drying sample bottles and flexible hoses. This system may also supply pneumatics to some tools in the workshop.

E. Electrical System. This system provides power to most equipment in the workshop.

F. Liquid Effluent Collection and Treatment System. This system collects, treats, and disposes of the liquid waste coming from the Decontamination Workshop.

G. Solid Waste Collection System. This collects and handles solid wastes, such as cloths, rags, and sludges, and ensures that it is disposed of off-site appropriately.

H. ~~Deionized Water Supply and Distribution~~Process Water System. ~~This provides~~After being processed by a water purification system, the DI water is used in ~~to~~ the decontamination system for rinsing the citric acid and solid contaminants. LBDCR-10-0018

3.5.15 (*See SAR § 12.1.3.54.3 Q.*) PFPE Oil Recovery System

LBDCR-10-0033

PFPE oil is a highly fluorinated, inert oil selected especially for use in uranium hexafluoride (UF_6) systems to avoid reaction with UF_6. The PFPE Oil Recovery Unit recovers used PFPE oil from pumps used in UF_6 process systems. Used PFPE oil is recovered by removing impurities that inhibit the oil's lubrication properties. The impurities collected are primarily uranyl fluoride (UO_2F_2) and uranium tetrafluoride (UF_4) particles. The recovery process also removes trace amounts of hydrocarbons, which if left in would react with UF_6. Flow through the PFPE Oil Recovery System, located in the Decontamination Workshop is shown in Figure 3.5-22, Process Flow Diagram, PFPE Oil Recovery System.

The process employed is essentially a laboratory scale unit that has been developed to a production level. PFPE oil recovery is carried out as a batch operation, one batch being up to 12 L (3.2 gal) of oil, using the fully enclosed, self-contained PFPE Oil Recovery Unit. Only one batch of oil is processed at any one time representing a maximum of 12 L (3.2 gal). The unit has a uranium removal section followed by a hydrocarbon removal section. Dimensions of the recovery unit are approximately 3 m (9.84 ft) long by 1 m (3.28 ft) wide by 2.2 m (7.22 ft) high.

3.5.15.1 System Description

The PFPE oil recovery process consists of oil collection, uranium precipitation, trace hydrocarbon removal, oil sampling, and storage of cleaned oil for re-use. Each step is performed manually.

PFPE oil is collected in the Decontamination Workshop as part of the pump disassembly process. The oil is transferred for processing to the PFPE Oil Recovery Unit in criticality safe, 5 L (1.32 gal), plastic containers. The containers are labeled so each can be tracked through the process. The used oil awaiting processing is stored in the PFPE oil receipt storage array to eliminate the possibility of accidental criticality. Each row of the array has 300 mm (0.984 ft) spacing between containers (edge to edge). The distance between rows is 600 mm (1.97 ft) (edge to edge). Containers are not accepted if there are no vacancies in the array.

Uranium compounds are removed from the PFPE oil in the PFPE Oil Recovery Unit to minimize personnel exposure to airborne contamination. Dissolved uranium compounds are removed by the addition of anhydrous sodium carbonate (Na_2CO_3) to the oil container which causes the uranium compounds to precipitate into sodium uranyl carbonate ($Na_4UO_2(CO_3)_3$). The mixture is agitated and then filtered through a coarse screen to remove metal particles and small parts such as screws and nuts. This waste is transferred to the Solid Waste Collection System. The oil is then heated to 90 °C (194 °F) and stirred for 90 minutes to speed the reaction. The oil is centrifuged to remove UF_4, sodium uranyl carbonate, and various metallic fluorides. The particulate that is removed from the oil is collected and transferred to the Solid Waste Collection System for subsequent offsite disposal.

After uranium compounds are removed, trace amounts of hydrocarbons are removed in the PFPE Oil Recovery Unit by adding activated carbon to the PFPE oil and heating the mixture to 100°C (212°F) for two hours. The activated carbon adsorbs the hydrocarbons, and the carbon in turn is removed by filtration through a bed of celite. The resulting sludge is transferred to the Solid Waste Collection System for disposal.

3.5.15.5 (See SAR § 12.1.3.5 Safety Considerations

LBDCR-10-0033

Failure of this system will not endanger the health and safety of the public. Nevertheless, design and operating features are included which contribute to the safety of plant workers. Containment of chemicals and wastes is provided by components, designated containers, and air filtration systems. Chemical reaction accidents are prevented by strict control on chemical handling procedures and physical segregation of chemicals in storage locations. PFPE oil is rated as non-combustible and is thermally stable up to 300°C (571°F). Strict control of oil temperatures during heating precludes threat of fire. To minimize worker exposure, the Fomblin© Oil Recovery System fume hood extracts all airborne radiological contamination resulting from oil recovery. Where necessary, air suits and portable ventilation units are available for further worker protection.

Criticality associated with PFPE oil recovery is precluded through the control of shape, mass, and the selection of appropriate storage containers.

The maximum volume of any vessel on the Fomblin© Oil Recovery Unit is 12 L (3.2 gal) and is intrinsically safe. However, MONK8A (SA, 2001) calculations demonstrate that the unit would remain safe even if all vessels were completely filled with uranyl fluoride-water mixture at 6.0 $^{w}/_{o}$ enrichment and at optimum moderation. Uranyl fluoride/water mixture is more conservative than a PFPE oil/UF_4 mixture. In the PFPE oil/UF_4 mixture, dissolved HF provides the moderation and HF solubility in PFPE oil is extremely low. LBDCR-10-0033

The MONK8A (SA, 2001) calculations for the Fomblin© Oil Recovery Unit modeled the fixed vessels in their normal positions and included one 12 L (3.2 gal) container adjacent to the first mixing vessel to represent the batch of oil being moved to the unit. A 2.5 cm (0.984 in) water layer was modeled around the vessels to simulate spurious reflection. All vessels contained uranyl fluoride-water mixture as stated above, and a range of H/U atomic ratios were considered to determine the optimum moderation. The maximum value of k_{eff} for the calculations was 0.7976 at an H/U ratio of 14.

3.5.16 Not Used

3.5.17 *(See SAR § 12.1.3.~~64.3 Q.~~)* Ventilated Room

LBDCR-10-0033

The function of the Ventilated Room is to provide a facility for the maintenance of chemical traps and UF_6 cylinders. The facility also deals with faults associated with cylinders and cylinder valves.

This includes safe emptying of chemicals from chemical traps and replacement of faulty valves on full UF_6 cylinders. The Ventilated Room is used for temporary storage of full and empty chemical traps and of the contaminated chemicals used in the chemical traps. The Ventilated Room is in physical proximity to the Decontamination Workshop through which the emptied chemical traps and other components are processed. Full maintenance records are kept for all chemical traps and UF_6 cylinders passing through the Ventilated Room.

3.5.17.1 System Description

The main activities carried out in the Ventilated Room are servicing chemical traps by removing spent carbon, aluminum oxide and sodium fluoride from the chemical traps and replacing damaged and leaking valves on cylinders which contain UF_6.

The chemical traps are essentially empty steel cylinders into which steel internal parts including perforated plates to carry the activated carbon are placed. The activated carbon in the trap adsorbs UF_6 which, is then assumed to be hydrated (by moist air inleakage) to form a uranyl fluoride/water mixture with a maximum H/U ratio of 7.

The traps are of internal diameter 20.3 cm (8.0 in) and height 105.8 cm (41.7 in). The diameter is less than the maximum safe diameter (21.9 cm (8.6 in)) for 6.0 $^{w}/_{o}$ enriched material for a single cylinder. However, it is possible that large numbers of traps (e.g., in storage arrays) are more reactive.

Arrays of chemical traps were modeled using MONK8A (SA, 2001). An array of 7x7 traps and a vacuum cleaner yields a k_{eff} of 0.9191 assuming 6.0 $^{w}/_{o}$ enrichment. This was modeled with the sidewalls of the traps touching, which could not happen in practice since there is a lip at the top. Taking account of one of these lips to give 5 cm (2.0 in) spacing between the traps an array of 11x11 traps and a vacuum cleaner was modeled and gave a reduced k_{eff} of 0.8665. The vacuum cleaner was assumed to be a cleaner of internal diameter 20.3 cm (8.0 in) and length 66 cm (26.0 in) and was assumed to be entirely filled with uranic material with an enrichment of 6.0 $^{w}/_{o}$. MONK8A (SA, 2001) calculations have also been carried out for an isolated cylinder using these dimensions, filled with uranyl fluoride/water at optimum moderation and with 2.5 cm (0.984 in) water reflection. This gave a value for k_{eff} of 0.8037. The cleaner has HEPA filtration on the exhaust, and will be dedicated for cleaning operations where uranic material is involved and will be marked clearly.

It can be concluded that arrays of these chemical traps containing uranium of up to 6.0 $^{w}/_{o}$ enrichment are safe up to an11x11 array configuration with no spacing restriction. The only stipulation that needs to be made is that stacking of traps in an array is not allowed.

Other potential hazards of the Ventilated Room are high-pressure air, surface contamination on the cylinders, and cylinders containing UF_6.

Measures have been taken to make the facility as safe as possible. The potential hazard associated with high-pressure air is minimized by the system being designed, inspected, and tested to national standards. Surface contamination is prevented through the performance of a surface wipe test on each cylinder prior to inspection and testing. A gamma detection system at the preparation monitors the presence of ^{235}U and an alarm will sound when threshold values are exceeded.

3.5.18 *(See SAR § 12.1.3.7~~4.3 R.~~)* Chemical Laboratory

LBDCR-10-0033

The prime function of the Chemical Laboratory is to analyze the product material to ensure that it meets the product purity specification. This involves the handling and storage of a large number of 1S sample bottles and the production of hydrolyzed UF_6 solutions for the subsequent analysis. There may also be a requirement for this laboratory to deal with other samples, for example, those from the Decontamination System's tanks. These samples will have uranium concentrations much less than the hydrolyzed UF_6 solutions considered below and as such can be treated in the same manner. There may be a requirement for other solid samples to be analyzed such as deposits removed from plant components prior to decontamination and these can be dealt with on a formal mass accountancy basis. The double batching mass limit of 45% of the minimum critical mass is used in the nuclear criticality safety for these samples.

Table 3.5-2 Compressed Air System Design Parameters

Nos. of CUB Air Compressors and Air System Components Required	Two of each
Design Air Compressor Capacity, each	466 m^3/hr (274scfm) – Peak 189 m^3/hr (111 scfm) - Normal
Design Compressor Outlet Air Pressure	13.7 barg (199 psig)
Compressed Air Receiver Tank, Operating Pressure	13 barg (188.5 psig)
Compressed Air Distribution System Supply Design Pressure	13 barg (188.5 psig)
Compressed Air Receiver Tank Surge Capacity	100 m^3/hr (3553 scfm) 6 cycles/valves/1 minute
Compressed Air Receiver Tank Storage Capacity	15 m^3 (530 ft^3) each of two tanks
Compressed Air Dew Point	-40°C at 12.06 barg (-40°F at 175 psig)
Maximum Oil Concentration in Compressed Air	0.5 mg/m^3
Maximum Particle Size in Compressed Air	1.0 micron
~~Nos. of CAB Air Compressors~~	~~Two of each~~
~~Design CAB Air Compressor Capacity, Each~~	~~158 scfm (268 m^3/hr)~~
~~Design CAB Air Compressor Outlet Air Pressure~~	~~150 psig (110.3 bar(g))~~
~~CAB Compressed Air Receiver Tank, Operating Pressure~~	~~110.3 barg (150 psig)~~
~~CAB Compressed Air Distribution System Supply Design Pressure~~	~~12.4 barg (180 psig)~~
~~CAB Compressed Air Receiver Tank Surge Capacity~~	~~100 m^3/hr (3553 scfm)~~ ~~6 cycles/valves/1 minute~~
~~CAB Compressed Air Receiver Tank Storage Capacity~~	~~1.7 m^3 (60.2 ft^3) each of two tanks~~
~~CAB Compressed Air Dew Point~~	~~-40°C at 110.3 bar(g) (-40°F at 150 psig)~~
~~CAB Maximum Oil Concentration in CAB Compressed Air~~	~~0.1 mg/m^3~~
~~Maximum Particle Size in CAB Compressed Air~~	~~1.0 micron~~

LBDCR-10-0009

	Office Building Compressor Room	South Compressor Room
Nos. of CAB Compressors	2	2
CAB Air Compressor Capacity (design), each	158 scfm (268 m^3/hr)	TBD
Cab Air Compressor Outlet Pressure (design)	150 psig (10.3 barg)	TBD
CAB Compressed Air Receiver Tank Operating Pressure	150 psig (10.3 barg)	TBD
CAB Compressed Air Distribution Supply Design Pressure	180 psig (12.4 barg)	TBD
CAB Compressed Air Receiver Tank Surge Capacity	3553 scfm (100 m^3/hr) 6 cycles/valve/ minute	TBD
CAB Compressed Air Receiver Tank Storage Capacity	60.2 ft^3 (1.7m^3)	TBD
CAB Compressed Air Dew Point	-40°F at 150 psig (-40°C at 10.3 barg)	TBD
CAB Compressed Air Maxium Oil Concentration	0.1 mg/m^3	TBD
CAB Compressed Air Maxium Particle Size	1 micron	TBD

LBDCR-10-0009

Table 3.5-3 Average Water Consumption

Area/Usage	Average Usage Rates		
	Gal/Day	GPM	Gal/Year
Domestic (Potable) Water	16,531	11.48	6,033,906
Cooling Tower Make Up	23,879	16.6	8,720,000
DI Water Make Up	~~2,304~~200	~~1.6~~.14	~~840,960~~70.400
Total Liquid Effluents	1,835	1.27	669,775
Total Average Flow (rounded up)	**~~44,500~~43,000**	**~~31*~~30***	**~~16,265,000~~15,500,000**

LBDCR-10-0018

LBDCR-10-0018

*Implies a constant and continuous (non stop) supply of water flowrate. In reality, the City of Eunice Municipal Water Authority needs to supply water at a flowrate of ~~200~~ 375 gpm to the facility to support the fire tank water replenishment as discussed in Section 7.5.1.1.1 of the SAR. Thus, at ~~200~~ 375 gpm, the daily water usage can be replenished in approximately ~~3.7~~2.0 hours (i.e., [~~44,500~~43,000 gallo~~o~~ns] / [~~200~~375 gal/min] / [60 min/hr] = ~~3.7~~1.9 hours).

LBDCR-10-0018

LBDCR-10-0018

Table 3.5-4 ~~Deionized Water Supply and Distribution System Design Parameters~~Deleted

~~Process Water Make-Up Rate~~	~~0-2.5 L/s (0-40 gpm)~~
~~Deionized Water Distribution Supply Rate~~	~~2.6 L/s (40 gpm)~~
~~Deionized Water Storage Tank Capacity~~	~~1893 L (500 gal)~~
~~Deionized Water Distribution Temperature~~	~~21.1°C (70°F maximum)~~
~~Deionized Water Quality:~~ ~~Minimum Resistivity~~ ~~Maximum Total Silica~~	 ~~12 Megohm/cm at 25°C~~ ~~1.0 mg/l as SiO_2~~

Table 3.5-5 Deleted

Table 3.5-6
Deleted

User System Design Duties	
HVAC Systems	12,207.5 kW (11580 Btu/s)

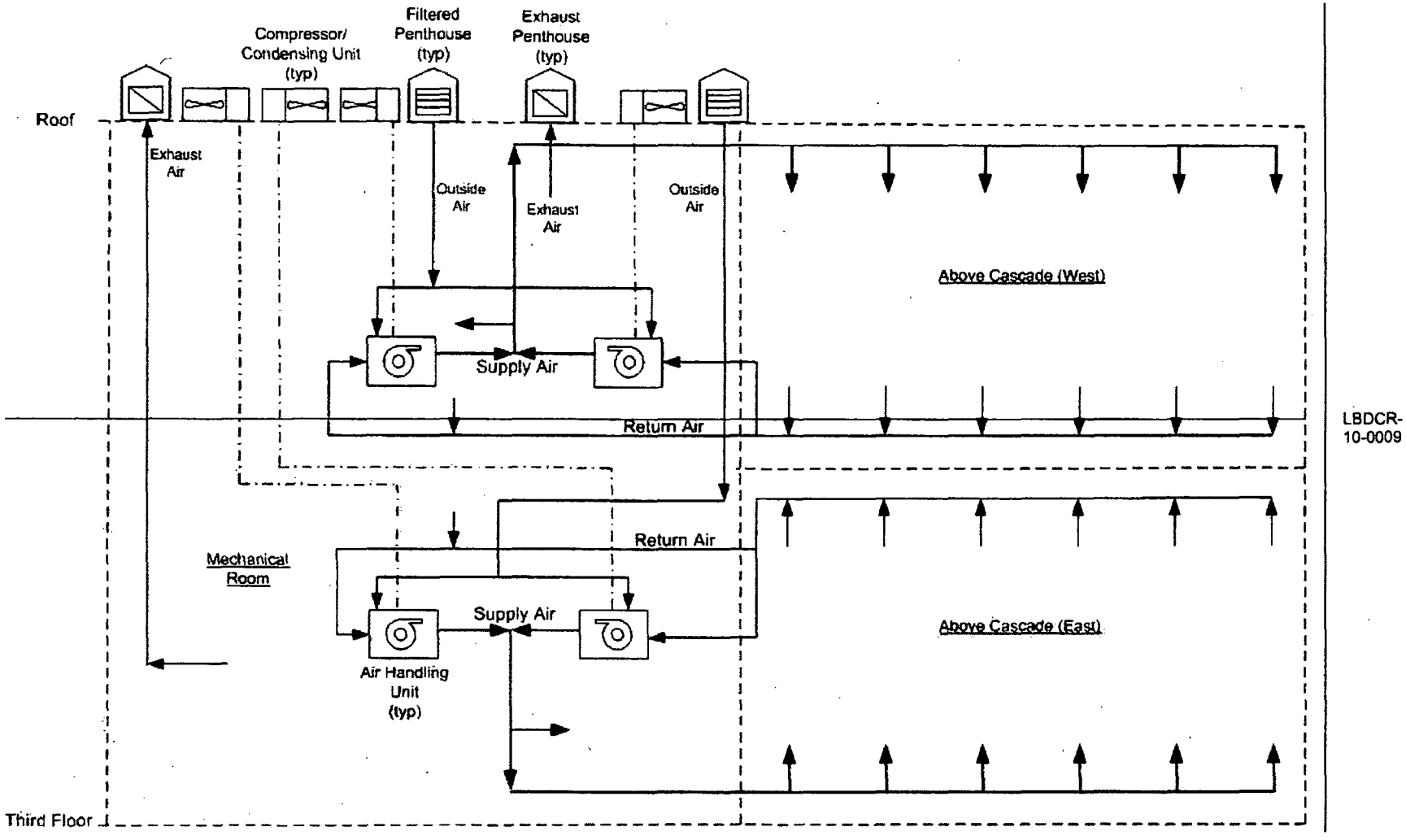
Compressor/
Condensing Unit
(typ)
Filtered
Penthouse
(typ)
Exhaust
Penthouse
(typ)
Roof
Exhaust
Air
Outside
Air
Exhaust
Air
Outside
Air
Above Cascade (West)
Supply Air
Return Air
LBDCR-
10-0009
Return Air
Mechanical
Room
Supply Air
Above Cascade (East)
Air Handling
Unit
(typ)
Third Floor

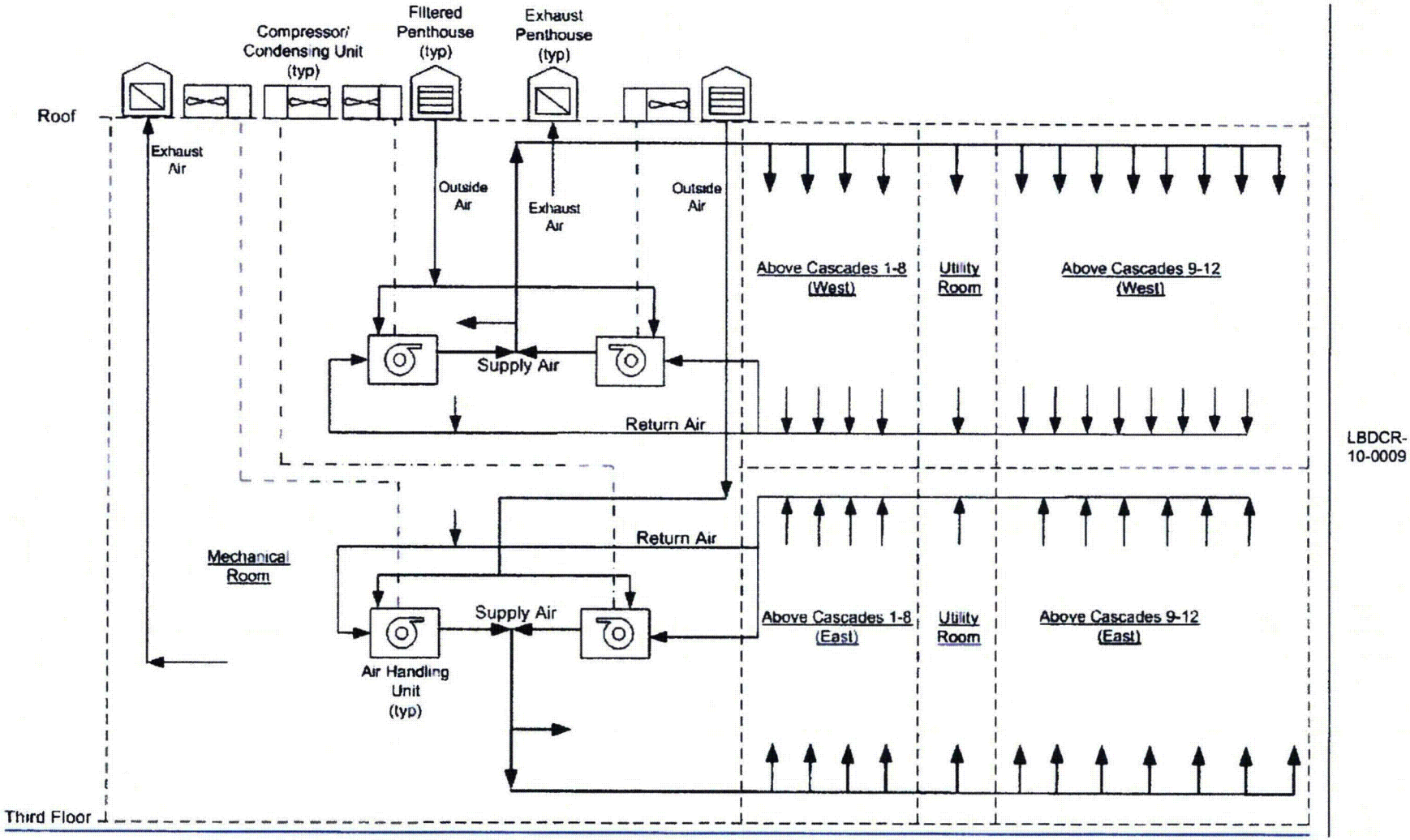

Figure 3.5-2 Flow Diagram Process Services Corridor Above Cascade HVAC System

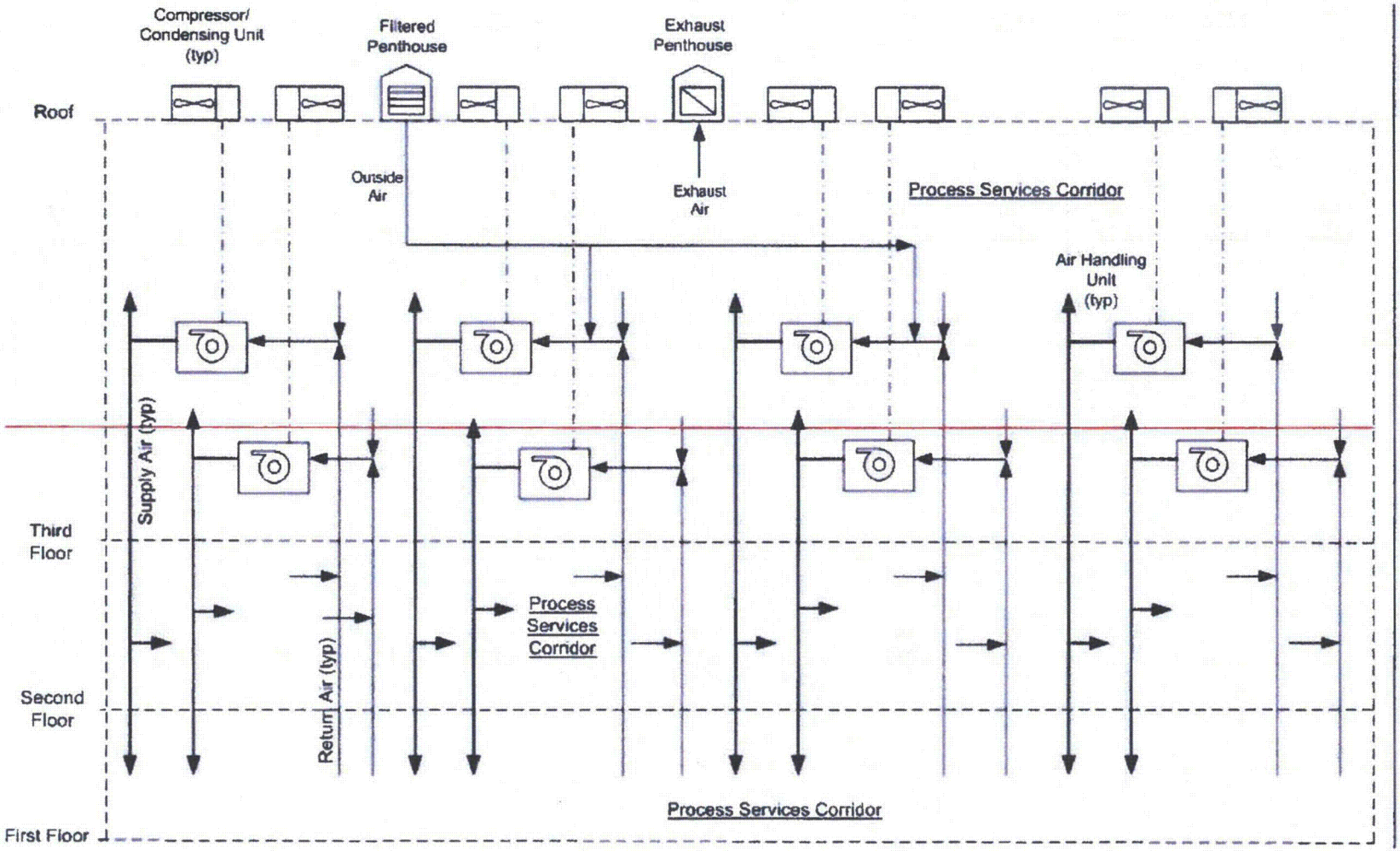

LBDCR-
10-0009

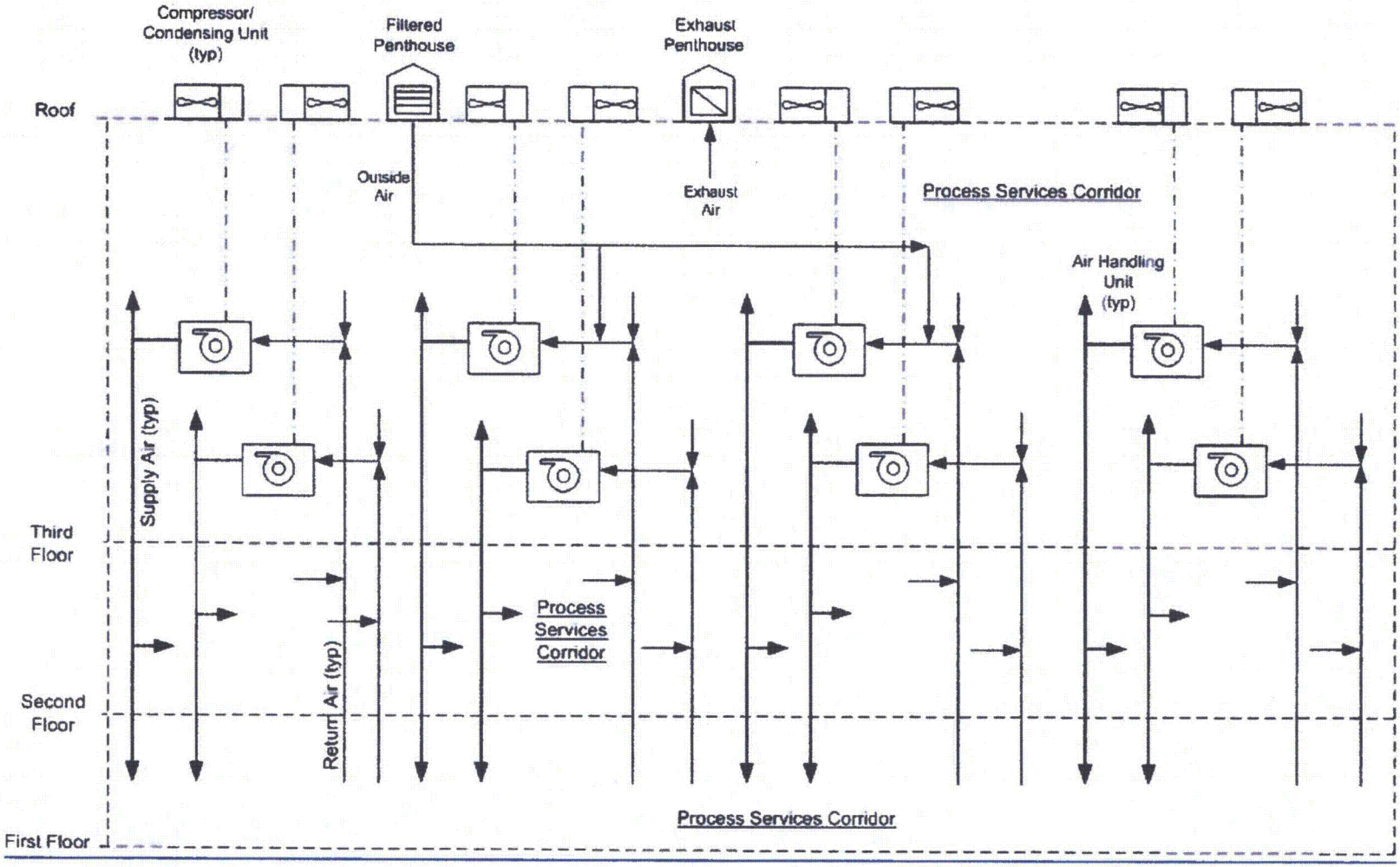

Figure 3.5-3 Flow Diagram Process Services Corridors First, Second and Third Floor HVAC System (Cascades 1-8) Sheet 1 of 2

LBDCR-
10-0009

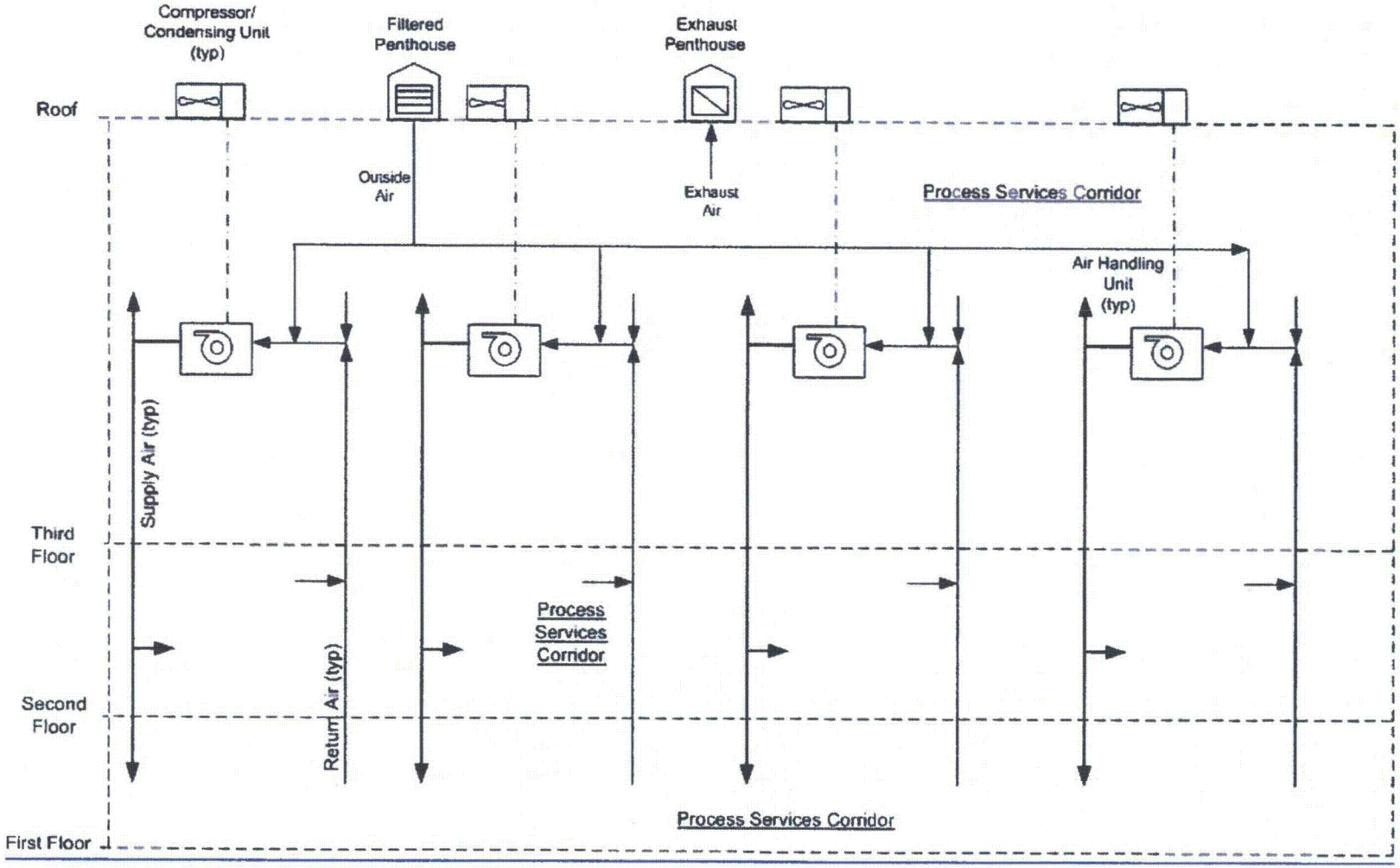

LBDCR-
10-0009

Figure 3.5-3 Flow Diagram Process Services Corridors First, Second and Third Floor HVAC System (Cascades 9-12) Sheet 2 of 2

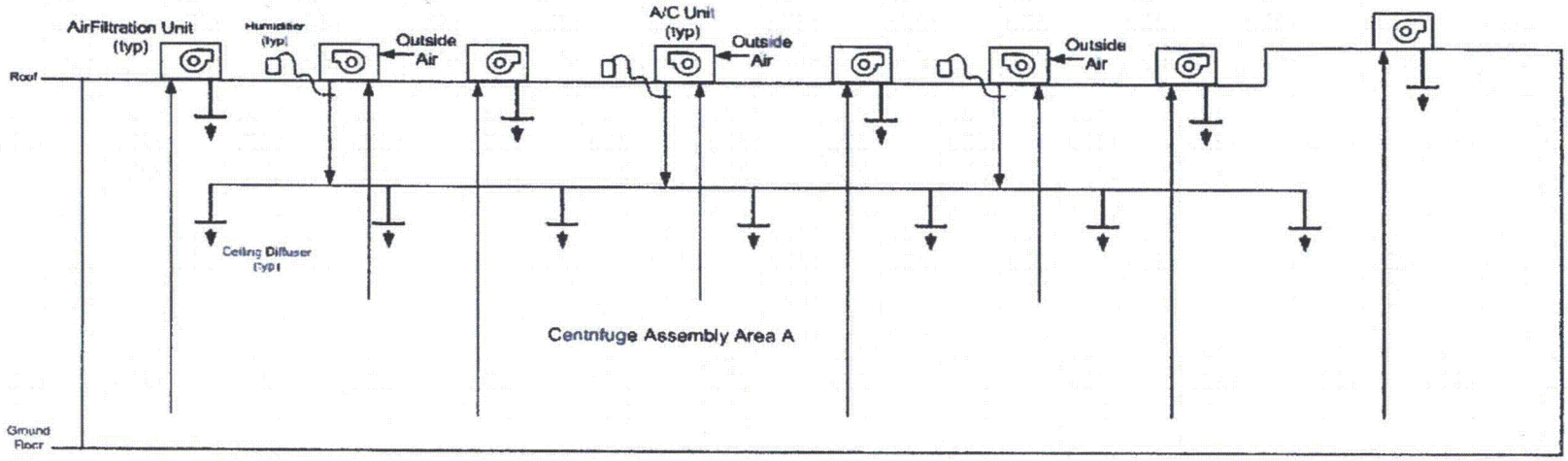

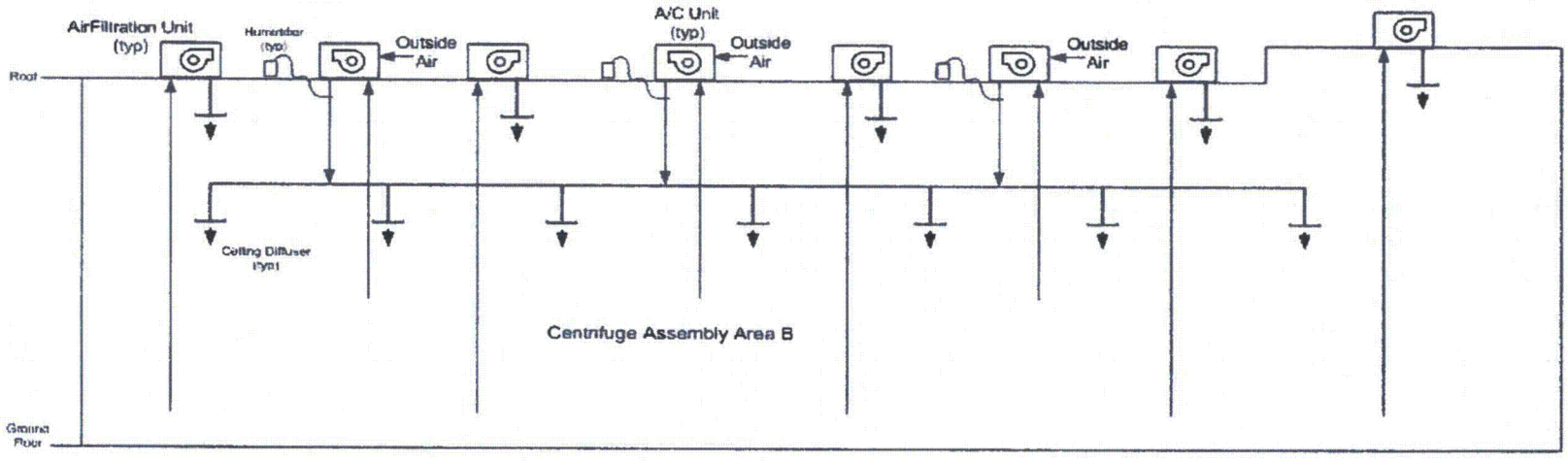

LBDCR-
10-0009

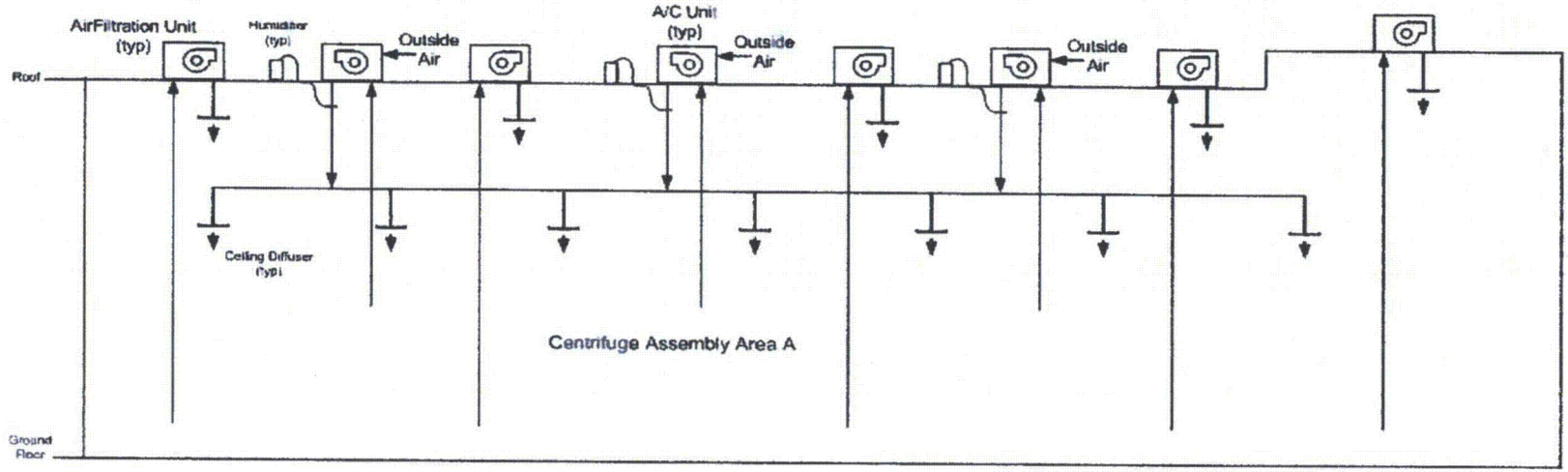

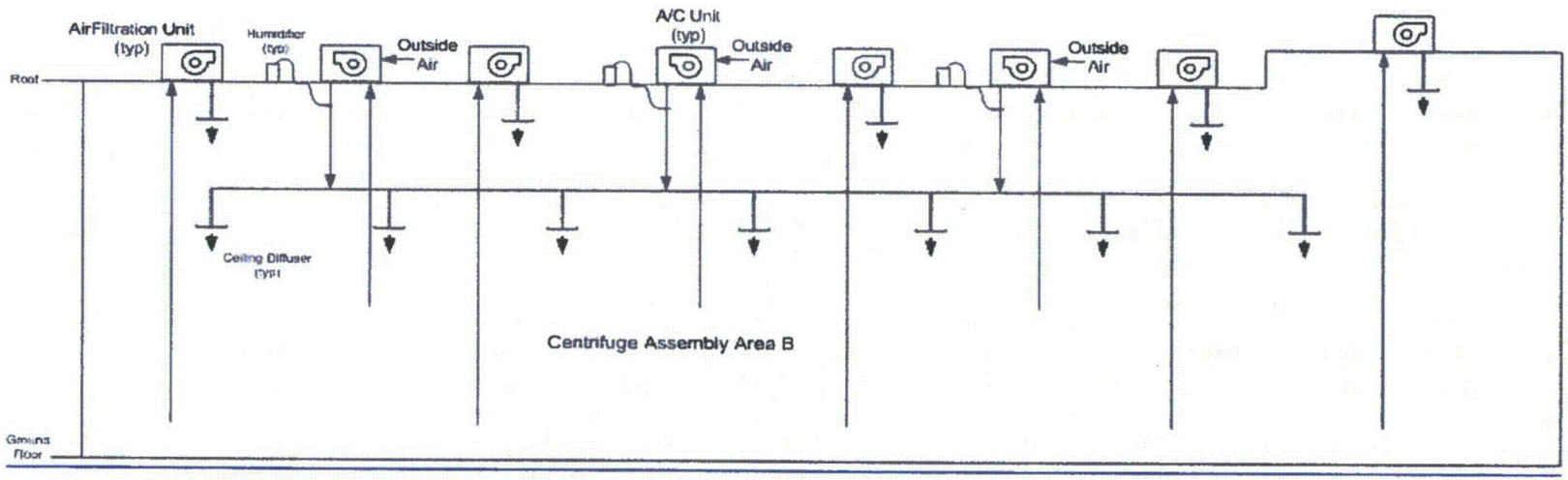

Figure 3.5-9 Flow Diagram Centrifuge Assembly Area HVAC System Sheet 1 of 2

LBDCR-
10-0009

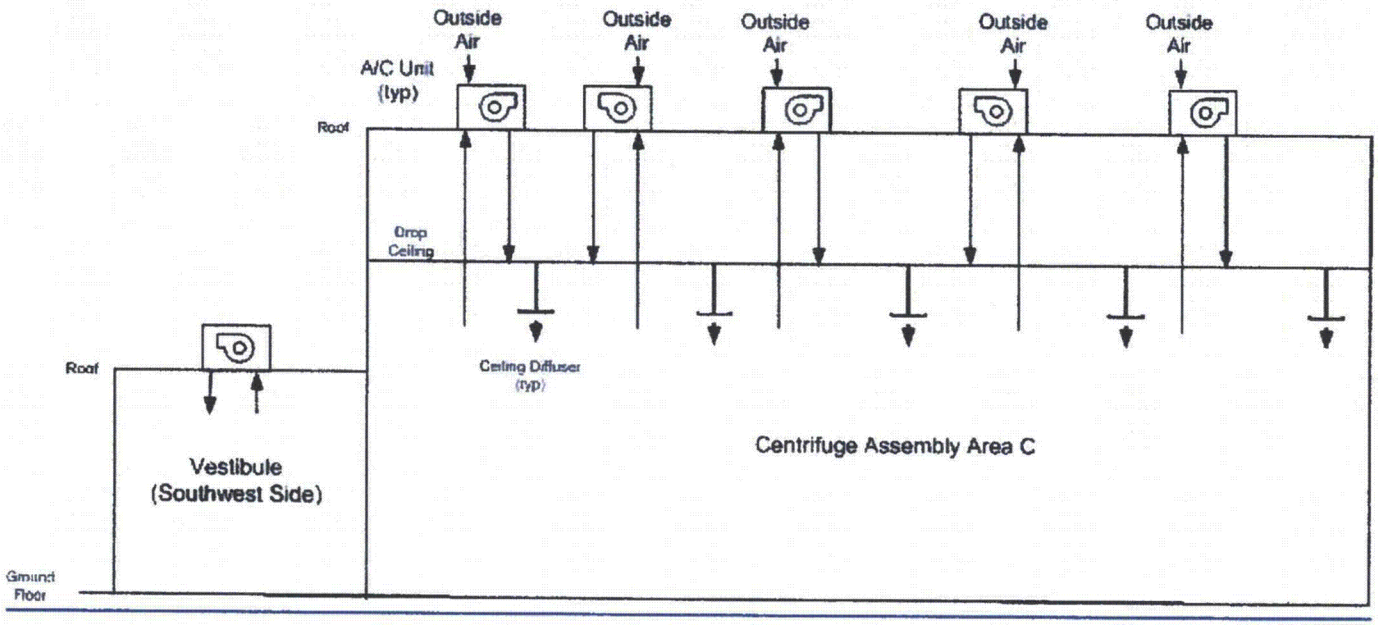

Figure 3.5-9 Flow Diagram Centrifuge Assembly Area HVAC System - Sheet 2 of 2

LBDCR-10-0009

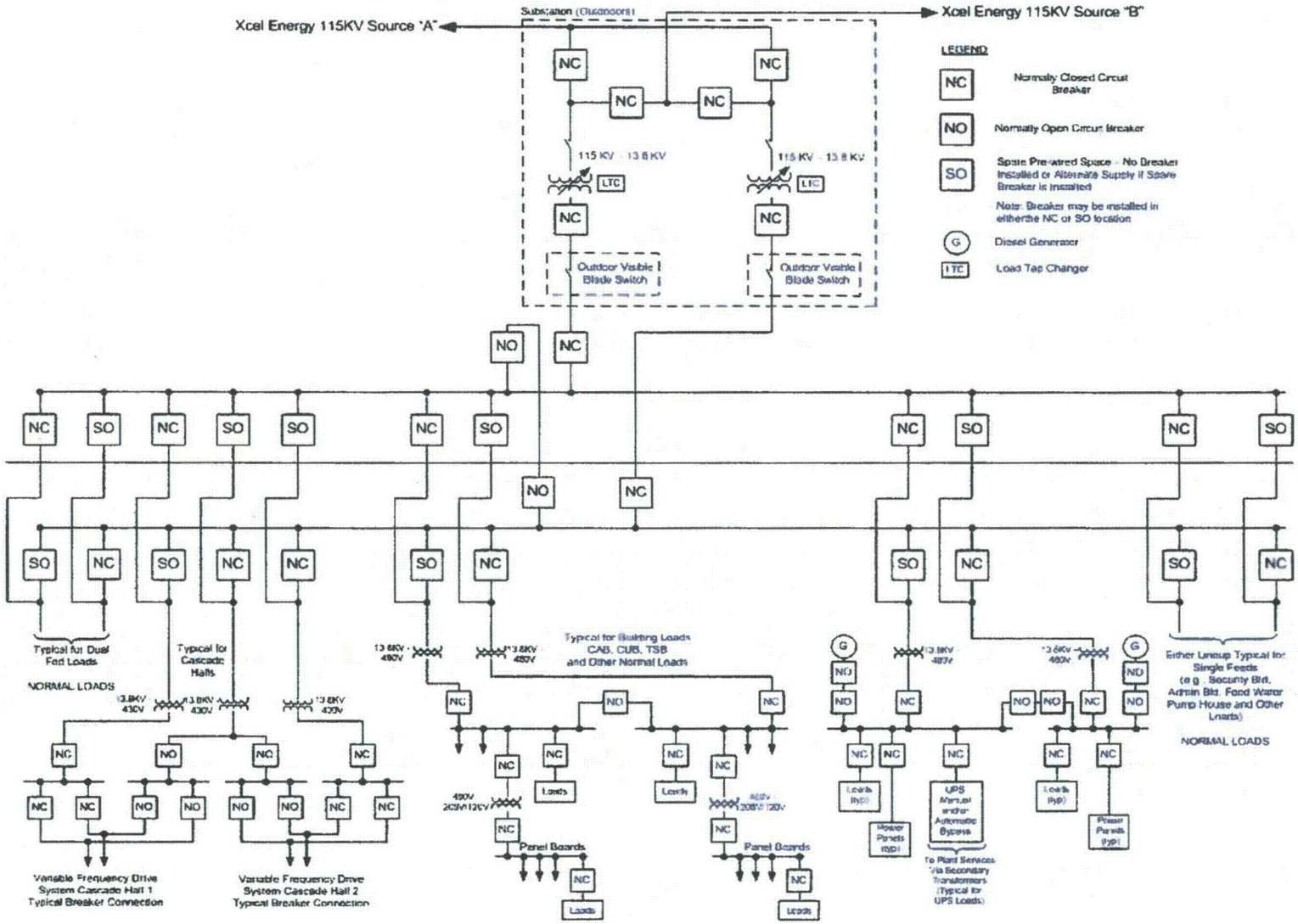

LBDCR-10-0009

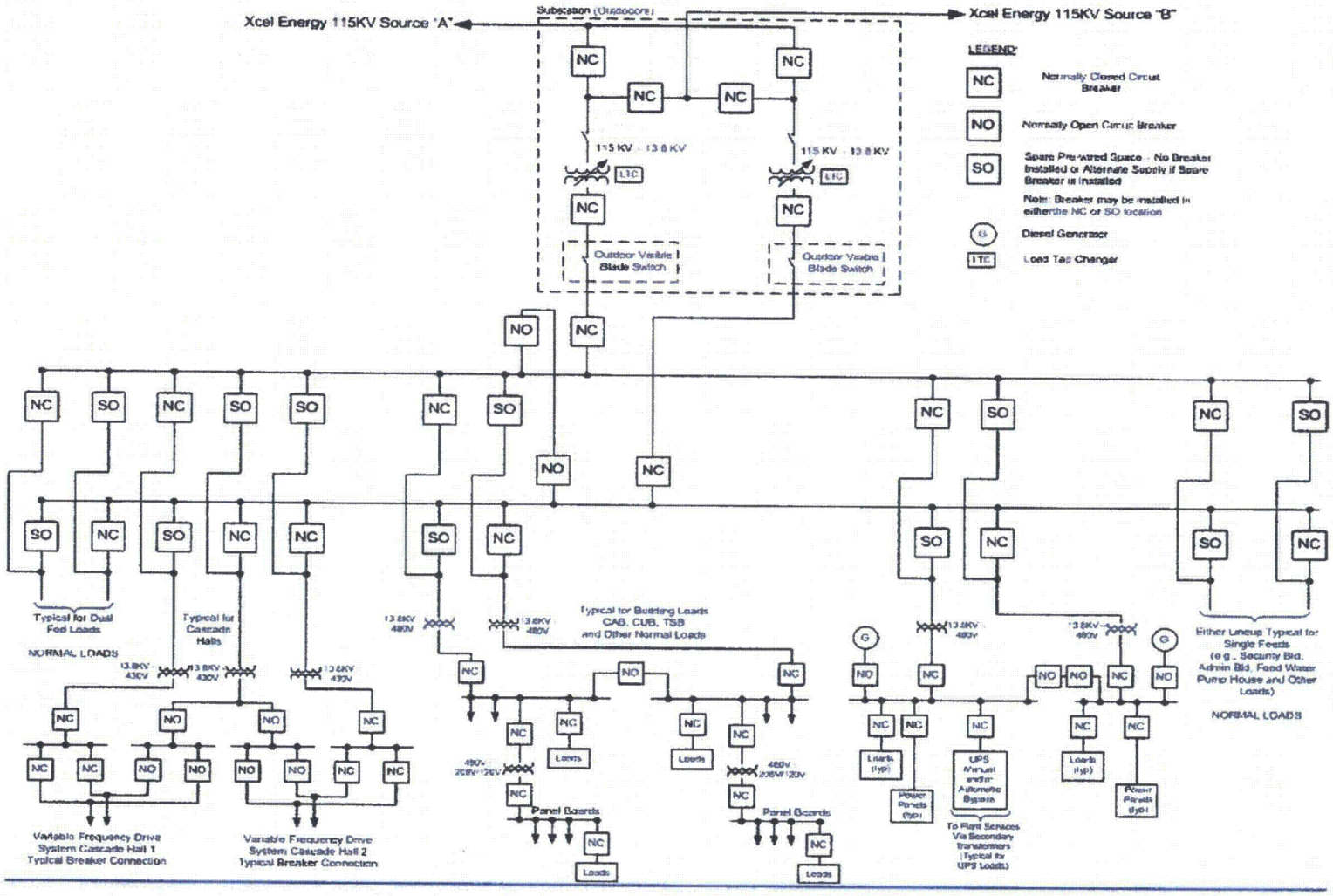

Figure 3.5-13 Single Line Diagram Electrical System

LBDCR-10-0009

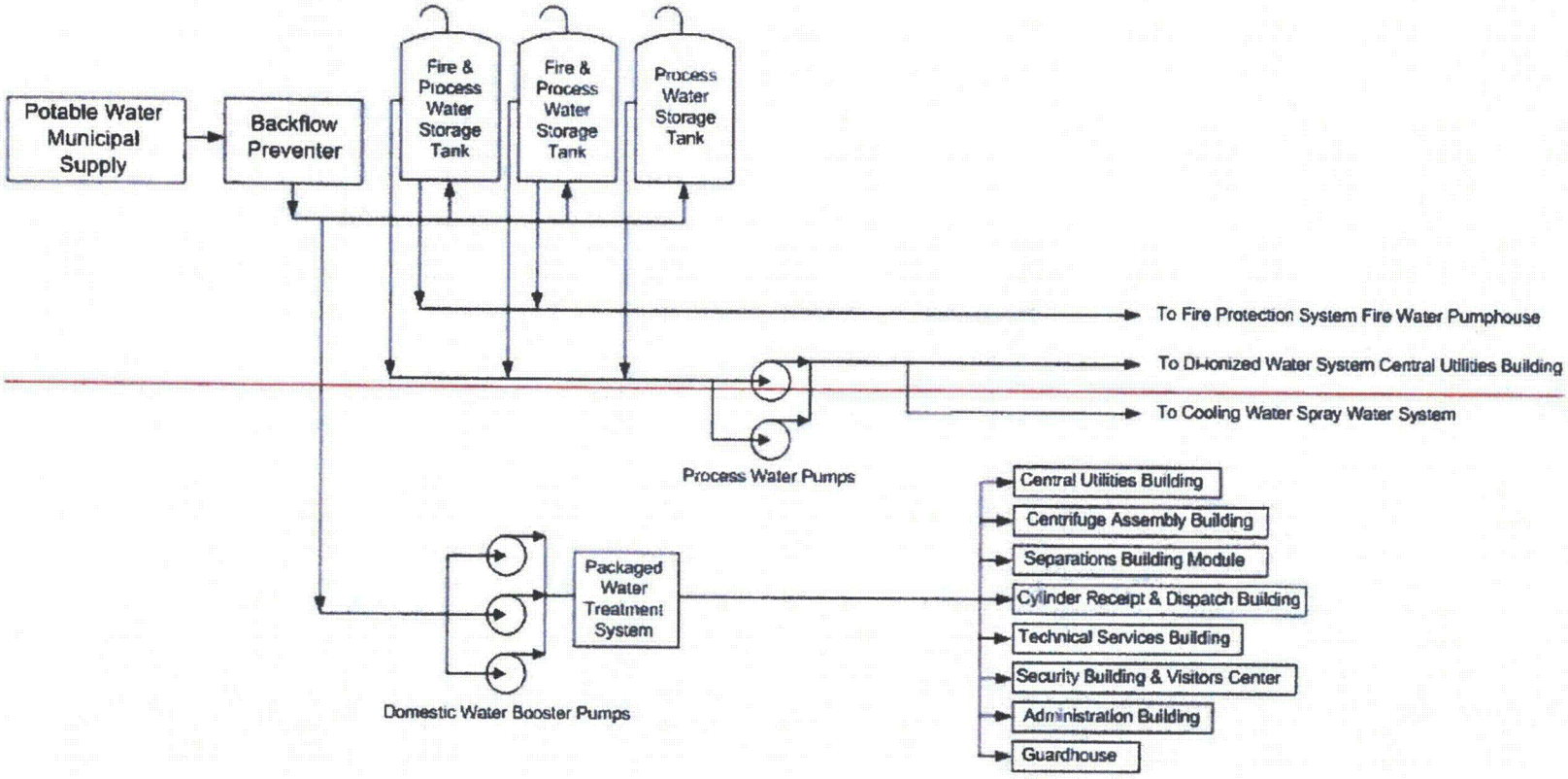

LBDCR-10-0018

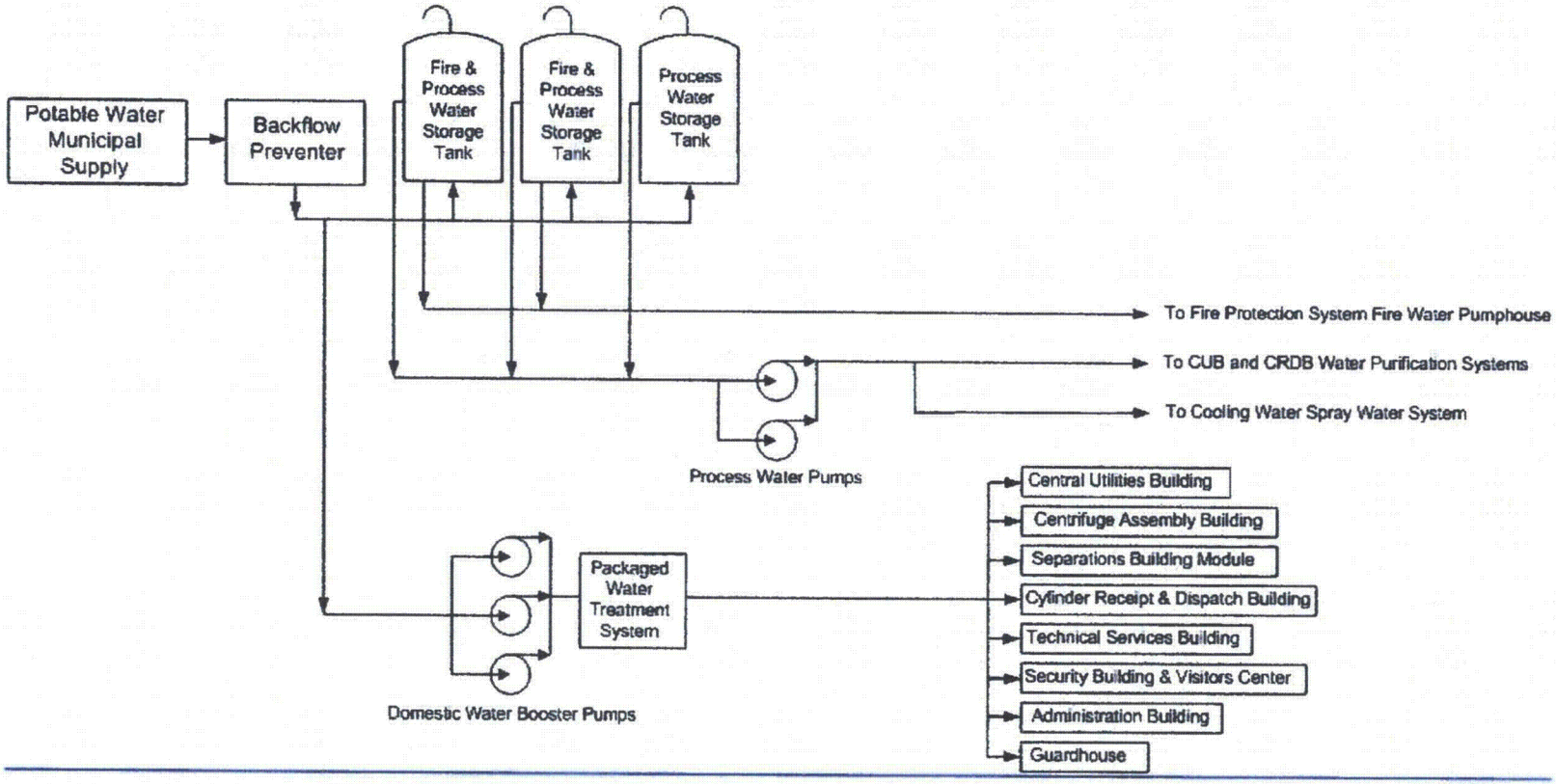

LBDCR-10-0018

Figure 3.5-15 Process Flow Diagram Process Water Distribution System

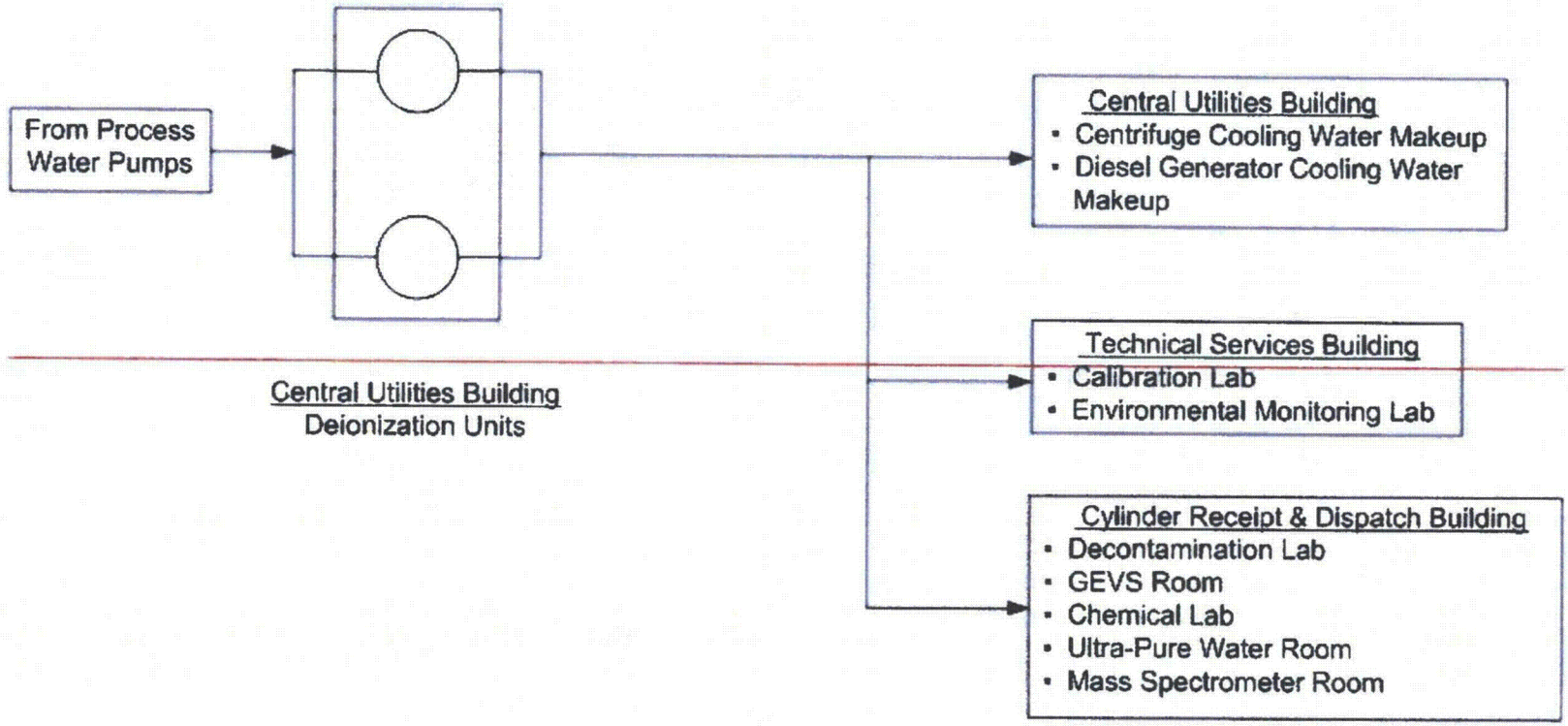

LBDCR-10-0018

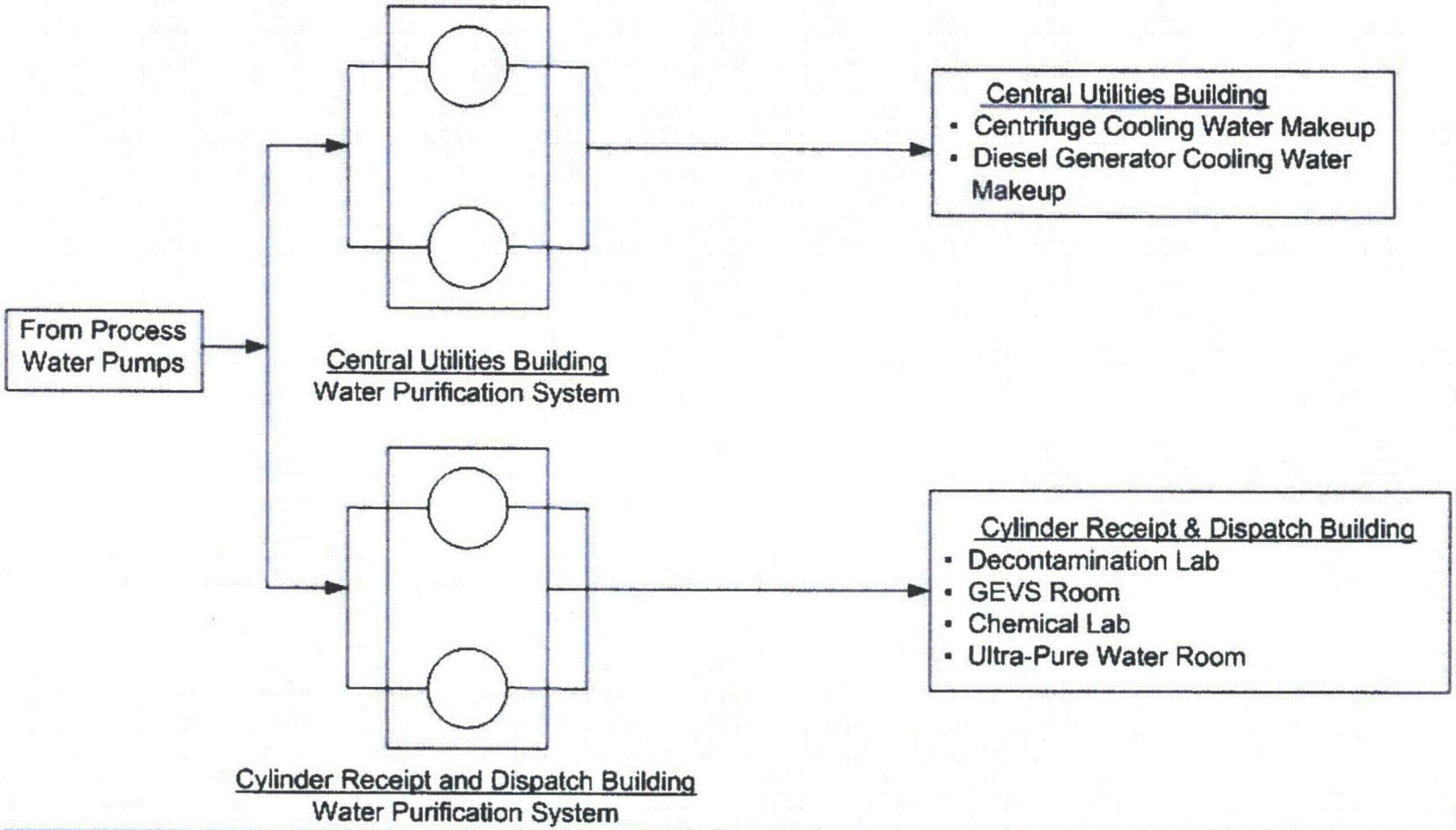

LBDCR-10-0018

Figure 3.5-16 Process Flow Diagram Process Water Distribution System

~~**Figure 3.5-23 Deleted**~~

3.7 GENERAL TYPES OF ACCIDENT SEQUENCES

Table 3.7-1, Accident Sequence and Risk Index, lists the potential accident sequences that were identified that could have consequences that exceed the performance criteria of 10 CFR 70.61 (CFR, 2003). The accident sequences identified in Table 3.7-1 include those from the classified and non-classified Integrated Safety Analysis (ISA). The likelihood, consequence, and risk ratings are also provided. The measures to reduce the risk to acceptable levels (Items Relied on for Safety (IROFS)) by either reducing the frequency of occurrence of the events or mitigating the consequences of the events are also identified. The reduction in risk results from the availability of the IROFS during the portion of the accident sequence for which the IROFS are credited. Additional details/descriptions of the accident sequences presented in Table 3.7-1 are provided in Table 3.7-2, Accident Sequence Descriptions. Again, these descriptions include the classified ISA results.

The results presented in Tables 3.7-1 and 3.7-2 are for the hazards identified for the process systems. The fire (external to the process systems) and external events (e.g., severe weather, seismic, transportation and industrial) hazards were assessed on a facility-wide basis and the results summarized in Tables 3.7-3, External Events and Fire Accident Sequences and Risk Index and 3.7-4, External Events and Fire Accident Descriptions. These are discussed in additional detail later in the text. Table 3.7-5, Uranic Material Assumptions for Criticality Accident Sequences, provides the assumed mass and enrichment values for ^{235}U for each of the criticality accident sequences presented in Tables 3.7-1 through 3.7-4.

The accident sequence risk assessment demonstrates that credible high-consequence events are highly unlikely and credible intermediate-consequence events are unlikely. IROFS necessary to prevent or mitigate event sequences that exceed 10 CFR 70.61 (CFR, 2003) criteria have been identified.

The definitions for the contents of each column in the accident summary tabulation in Table 3.7 1 and Table 3.7 3 are provided below. The ISA methodology is described in Section 3.1, General ISA Information.

Accident Identifier

This column identifies the accident sequence being analyzed. The ISA will have all accident sequences for each uniquely identified facility process. The accident sequence identifier has the format AAB-C where AA is the system/area from the table below, B is the Hazard ~~and Operability (HAZOP)~~ Analysis node number and C is the accident sequence number. LBDCR-10-0044

Accident Sequence System Identifier	
Identifier (AA)	**System/Area**
CL	Chemical Laboratory
CP	Cylinder Preparation
DS	Decontamination
EC	Cascade
FR	PFPE Oil Recovery
LT	Liquid Effluent Treatment
LW	Liquid Effluent Collection
MS	Mass Spectrometry Laboratory
OC	Operate While Constructing
PB	Product Blending and Liquid Sampling
PT	Product Take-Off
RD	Cylinder Receipt and Dispatch
SW	Solid Waste Collection
TP	CentrifugeTest/Centrifuge Post Mortem
TT	Tails Take-Off
TVR	~~Temporary~~ Ventilated Storage Room
UF	UF_6 Feed
VR	Ventilated Room

LBDCR-10-0044

LBDCR-10-0033

LBDCR-10-0007

Initiating Event Index (Column a)

This column lists initiating events or IROFS failures that are typically identified in the Process Hazard Analysis (PHA) phase of the ISA and that may lead to consequences exceeding those identified in 10 CFR 70.61 (CFR, 2003). Initiating events are of several distinct types: (1) external events, such as hurricanes and earthquakes; (2) facility events external to the node being analyzed (e.g., fires, explosions, failures of other equipment, flooding from facility water sources); (3) deviations from normal operations of the process in the node (i.e., credible abnormal events); and (4) failures of IROFS of the node. The tabulated initiating events consist of those that involve an actual or assumed failure of IROFS or that cause a demand requiring IROFS to function to prevent consequences exceeding 10 CFR 70.61 (CFR, 2003) levels. The frequency index number for initiating events is given in the table in column (a)." Table 3.1-9, Failure Frequency Index Numbers, provides criteria for assigning a value to the frequency index.

Table 3.5-2 Compressed Air System Design Parameters

Nos. of CUB Air Compressors and Air System Components Required	Two of each
Design Air Compressor Capacity, each	466 m^3/hr (274scfm) – Peak 189 m^3/hr (111 scfm) - Normal
Design Compressor Outlet Air Pressure	13.7 barg (199 psig)
Compressed Air Receiver Tank, Operating Pressure	13 barg (188.5 psig)
Compressed Air Distribution System Supply Design Pressure	13 barg (188.5 psig)
Compressed Air Receiver Tank Surge Capacity	100 m^3/hr (3553 scfm) 6 cycles/valves/1 minute
Compressed Air Receiver Tank Storage Capacity	15 m^3 (530 ft^3) each of two tanks
Compressed Air Dew Point	-40°C at 12.06 barg (-40°F at 175 psig)
Maximum Oil Concentration in Compressed Air	0.5 mg/m^3
Maximum Particle Size in Compressed Air	1.0 micron
~~Nos. of CAB Air Compressors~~	~~Two of each~~
~~Design CAB Air Compressor Capacity, Each~~	~~158 scfm (268 m^3/hr)~~
~~Design CAB Air Compressor Outlet Air Pressure~~	~~150 psig (110.3 bar(g))~~
~~CAB Compressed Air Receiver Tank, Operating Pressure~~	~~110.3 barg (150 psig)~~
~~CAB Compressed Air Distribution System Supply Design Pressure~~	~~12.4 barg (180 psig)~~
~~CAB Compressed Air Receiver Tank Surge Capacity~~	~~100 m^3/hr (3553 scfm)~~ ~~6 cycles/valves/1 minute~~
~~CAB Compressed Air Receiver Tank Storage Capacity~~	~~1.7 m^3 (60.2 ft^3) each of two tanks~~
~~CAB Compressed Air Dew Point~~	~~-40°C at 110.3 bar(g) (-40°F at 150 psig)~~
~~CAB Maximum Oil Concentration in CAB Compressed Air~~	~~0.1 mg/m^3~~
~~Maximum Particle Size in CAB Compressed Air~~	~~1.0 micron~~

LBDCR-10-0009

	Office Building Compressor Room	South Compressor Room
Nos. of CAB Compressors	2	2
CAB Air Compressor Capacity (design), each	158 scfm (268 m^3/hr)	TBD
Cab Air Compressor Outlet Pressure (design)	150 psig (10.3 barg)	TBD
CAB Compressed Air Receiver Tank Operating Pressure	150 psig (10.3 barg)	TBD
CAB Compressed Air Distribution Supply Design Pressure	180 psig (12.4 barg)	TBD
CAB Compressed Air Receiver Tank Surge Capacity	3553 scfm (100 m^3/hr) 6 cycles/valve/ minute	TBD
CAB Compressed Air Receiver Tank Storage Capacity	60.2 ft^3 (1.7m^3)	TBD
CAB Compressed Air Dew Point	-40°F at 150 psig (-40°C at 10.3 barg)	TBD
CAB Compressed Air Maxium Oil Concentration	0.1 mg/m^3	TBD
CAB Compressed Air Maxium Particle Size	1 micron	TBD

LBDCR-10-0009

Table 3.5-3 Average Water Consumption

Area/Usage	Average Usage Rates		
	Gal/Day	GPM	Gal/Year
Domestic (Potable) Water	16,531	11.48	6,033,906
Cooling Tower Make Up	23,879	16.6	8,720,000
DI Water Make Up	~~2,304~~200	~~1.6~~.1 4	~~840,960~~70.400
Total Liquid Effluents	1,835	1.27	669,775
Total Average Flow (rounded up)	**~~44,500~~43,000**	**~~31*~~30 ***	**~~16,265,000~~15,500,000**

LBDCR-10-0018

LBDCR-10-0018

*Implies a constant and continuous (non stop) supply of water flowrate. In reality, the City of Eunice Municipal Water Authority needs to supply water at a flowrate of ~~200~~ 375 gpm to the facility to support the fire tank water replenishment as discussed in Section 7.5.1.1.1 of the SAR. Thus, at ~~200~~ 375 gpm, the daily water usage can be replenished in approximately ~~3.7~~2.0 hours (i.e., [~~44,500~~43,000 galloons] / [~~200~~375 gal/min] / [60 min/hr] = ~~3.7~~1.9 hours).

LBDCR-10-0018

LBDCR-10-0018

Table 3.5-4 ~~Deionized Water Supply and Distribution System Design Parameters~~Deleted

~~Process Water Make Up Rate~~	~~0-2.5 L/s (0-40 gpm)~~
~~Deionized Water Distribution Supply Rate~~	~~2.6 L/s (40 gpm)~~
~~Deionized Water Storage Tank Capacity~~	~~1893 L (500 gal)~~
~~Deionized Water Distribution Temperature~~	~~21.1°C (70°F maximum)~~
~~Deionized Water Quality:~~ ~~Minimum Resistivity~~ ~~Maximum Total Silica~~	 ~~12 Megohm/cm at 25°C~~ ~~1.0 mg/l as SiO_2~~

Table 3.5-5 Deleted

Table 3.5-6
Deleted

User System Design Duties	
HVAC Systems	12,207.5 kW (11580 Btu/s)

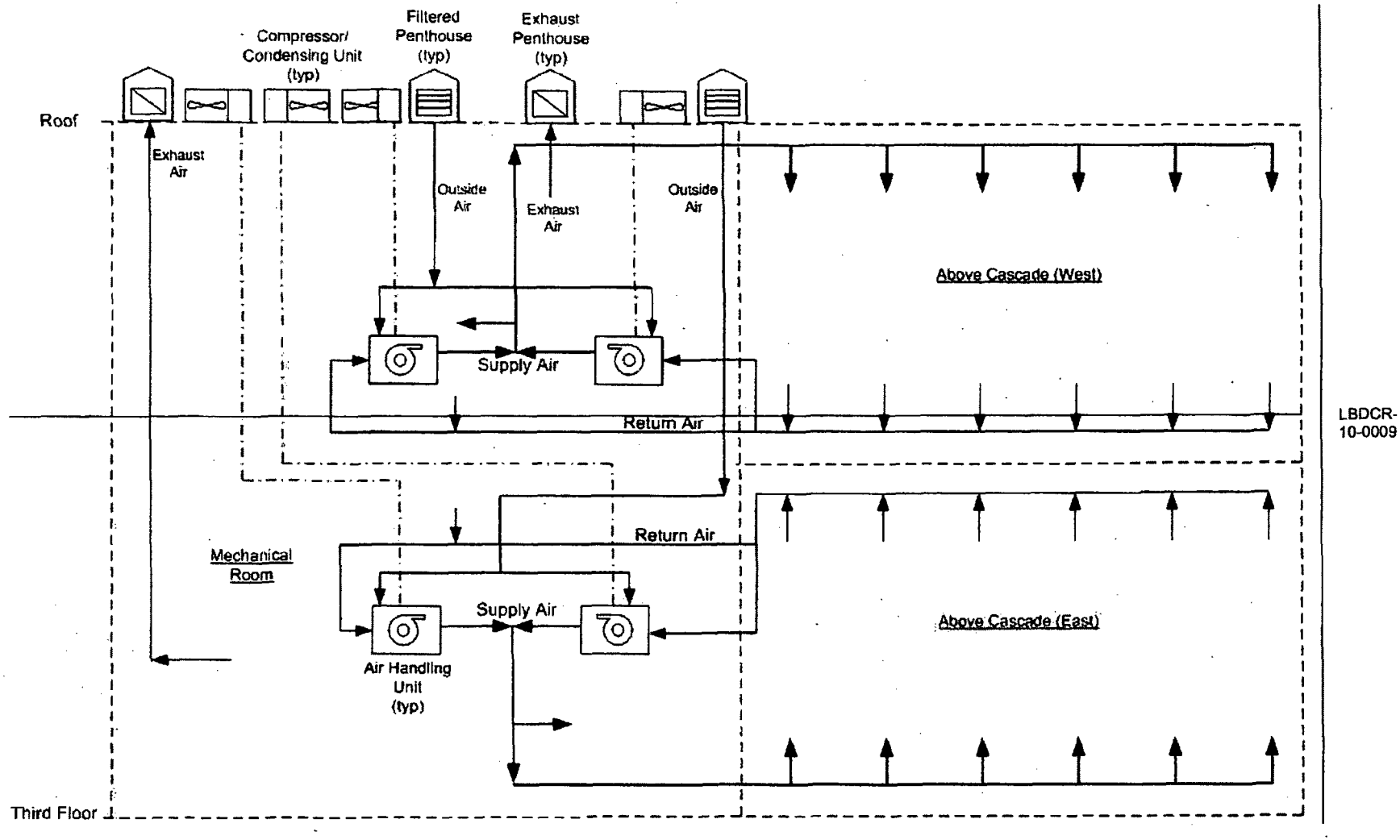
Compressor/
Condensing Unit
(typ)
Filtered
Penthouse
(typ)
Exhaust
Penthouse
(typ)
Roof
Exhaust
Air
Outside
Air
Exhaust
Air
Outside
Air
Above Cascade (West)
Supply Air
Return Air
Return Air
Mechanical
Room
Supply Air
Air Handling
Unit
(typ)
Above Cascade (East)
Third Floor
LBDCR-
10-0009

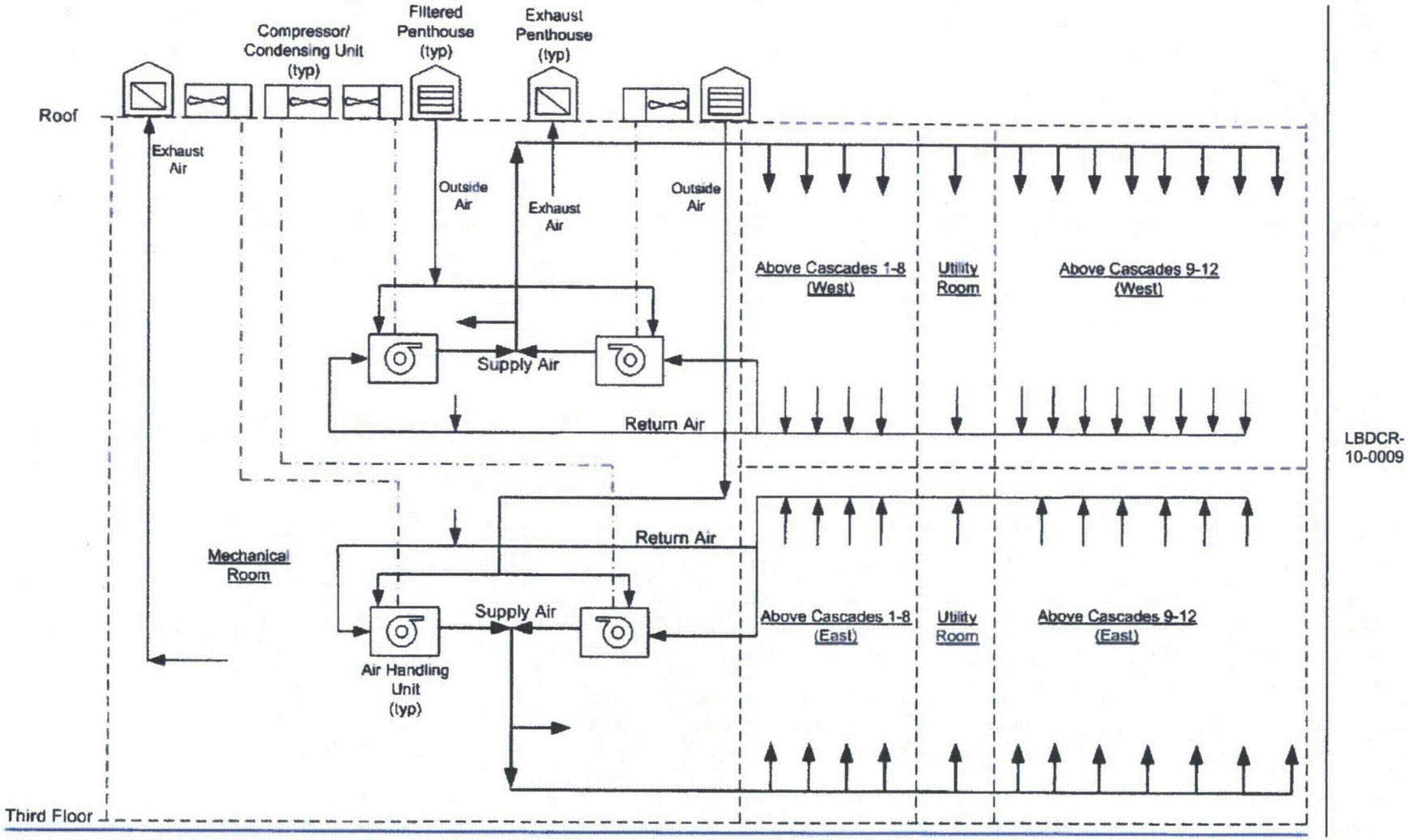

Figure 3.5-2 Flow Diagram Process Services Corridor Above Cascade HVAC System

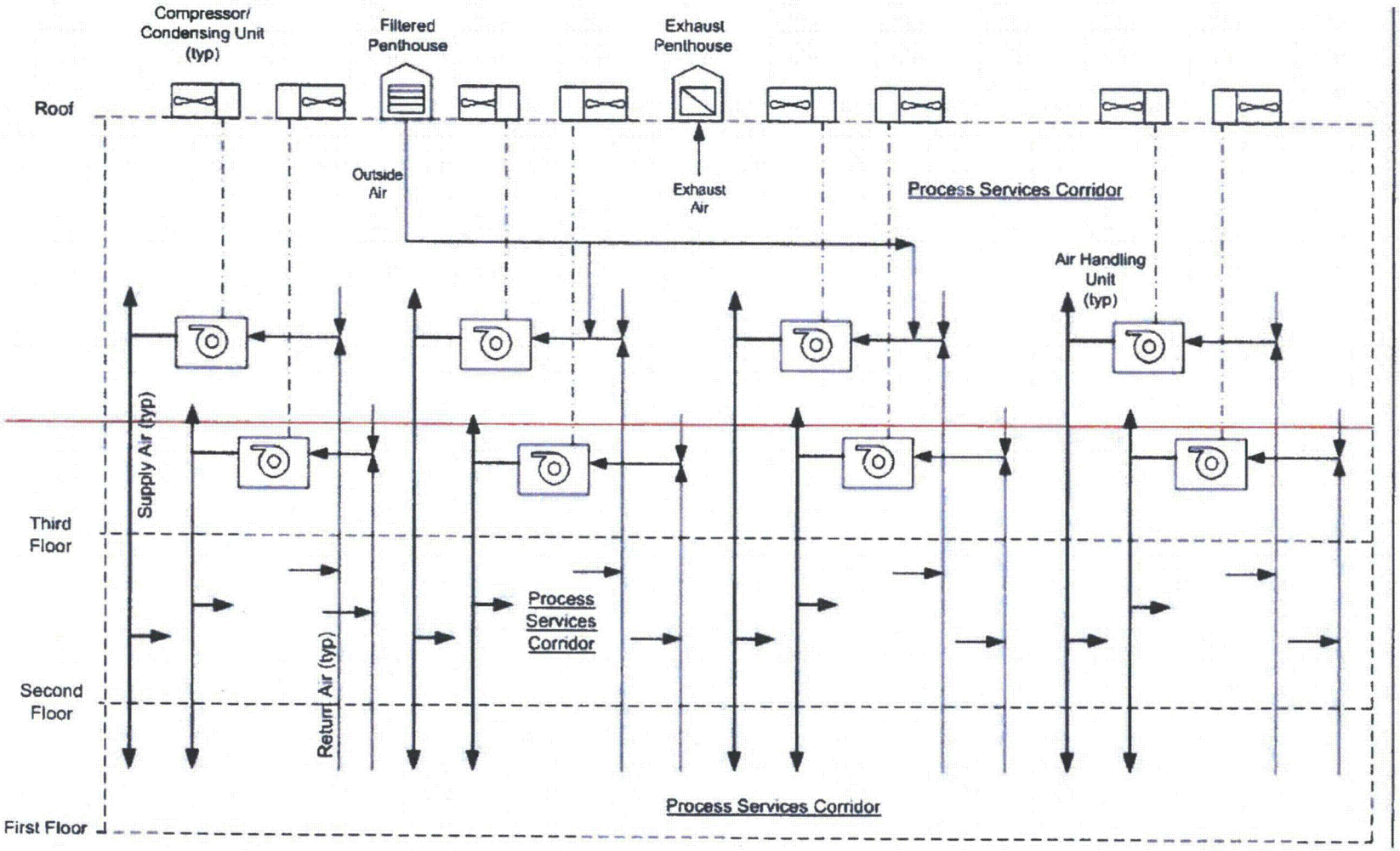

LBDCR-
10-0009

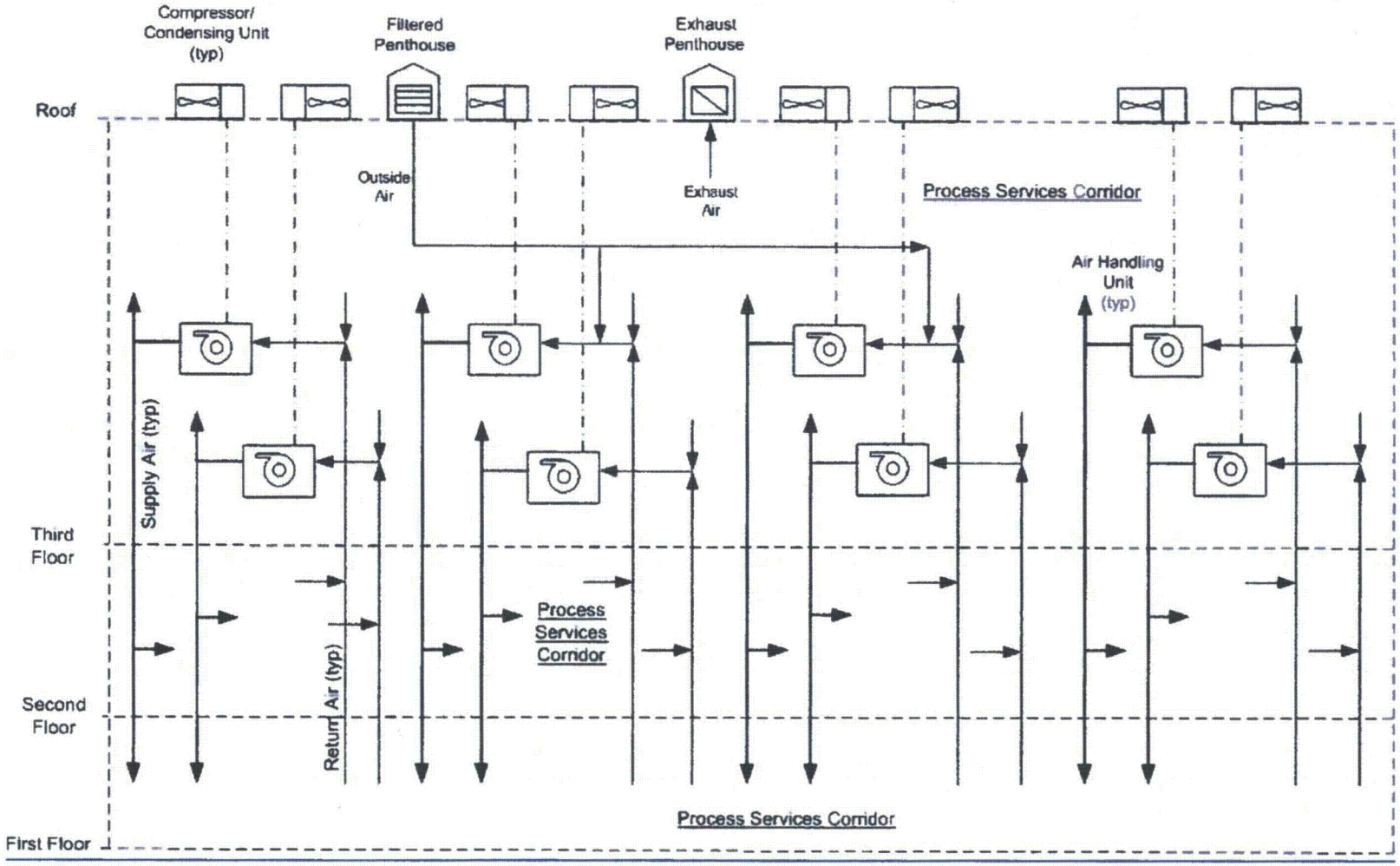

LBDCR-
10-0009

Figure 3.5-3 Flow Diagram Process Services Corridors First, Second and Third Floor HVAC System (Cascades 1-8) Sheet 1 of 2

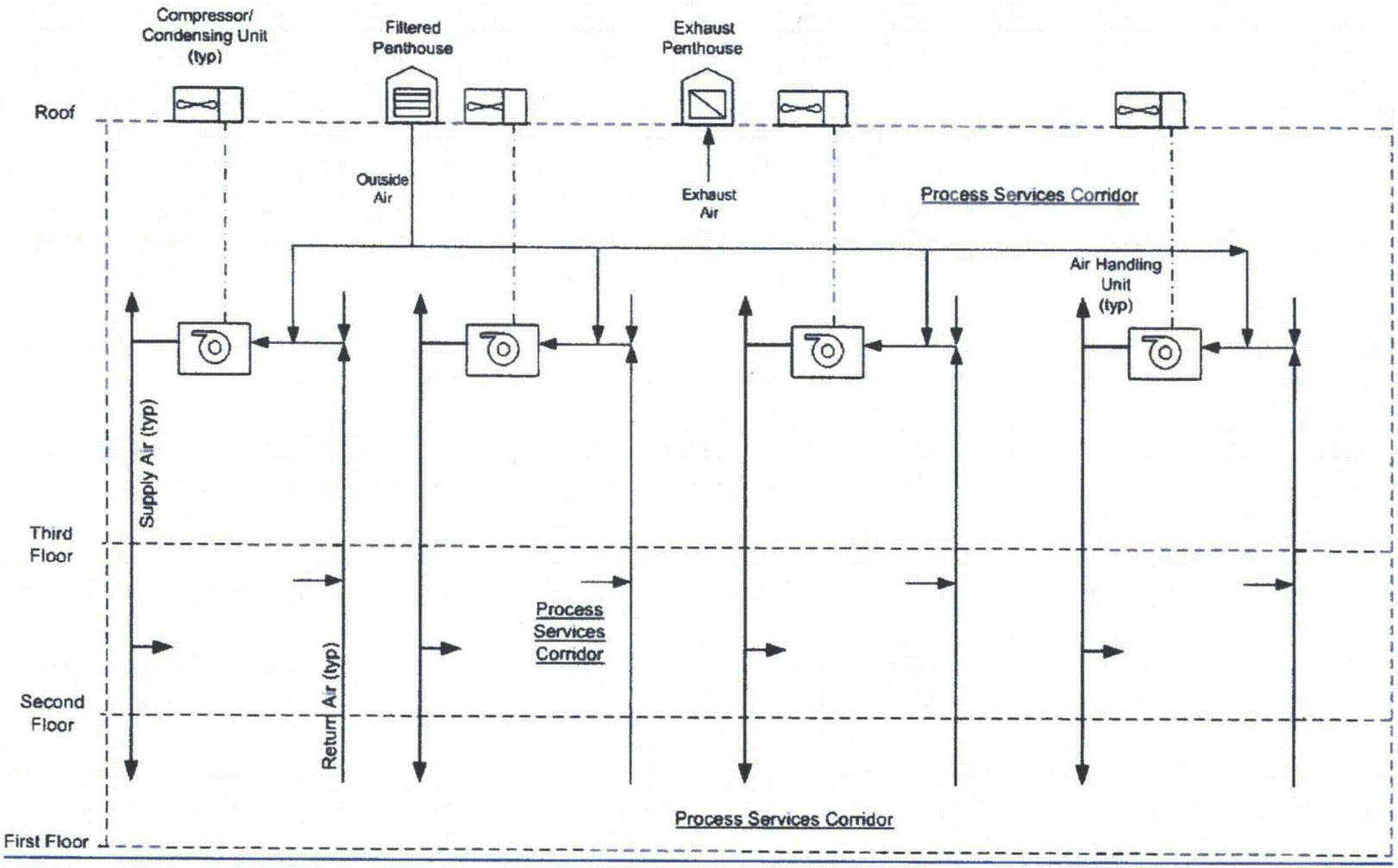

LBDCR-
10-0009

Figure 3.5-3 Flow Diagram Process Services Corridors First, Second and Third Floor HVAC System (Cascades 9-12) Sheet 2 of 2

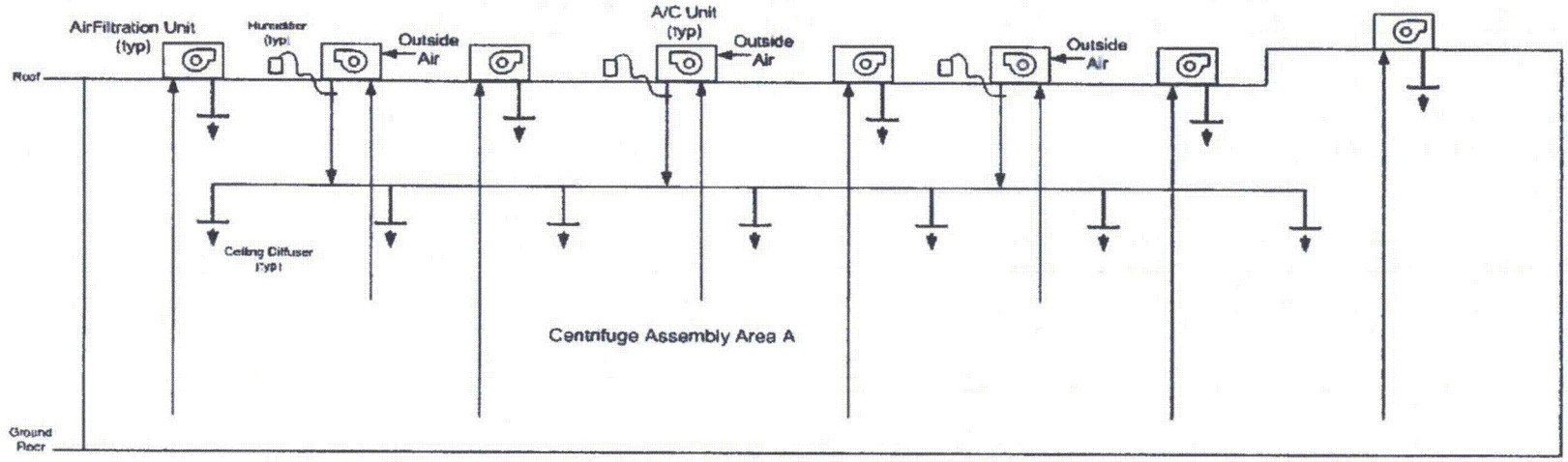

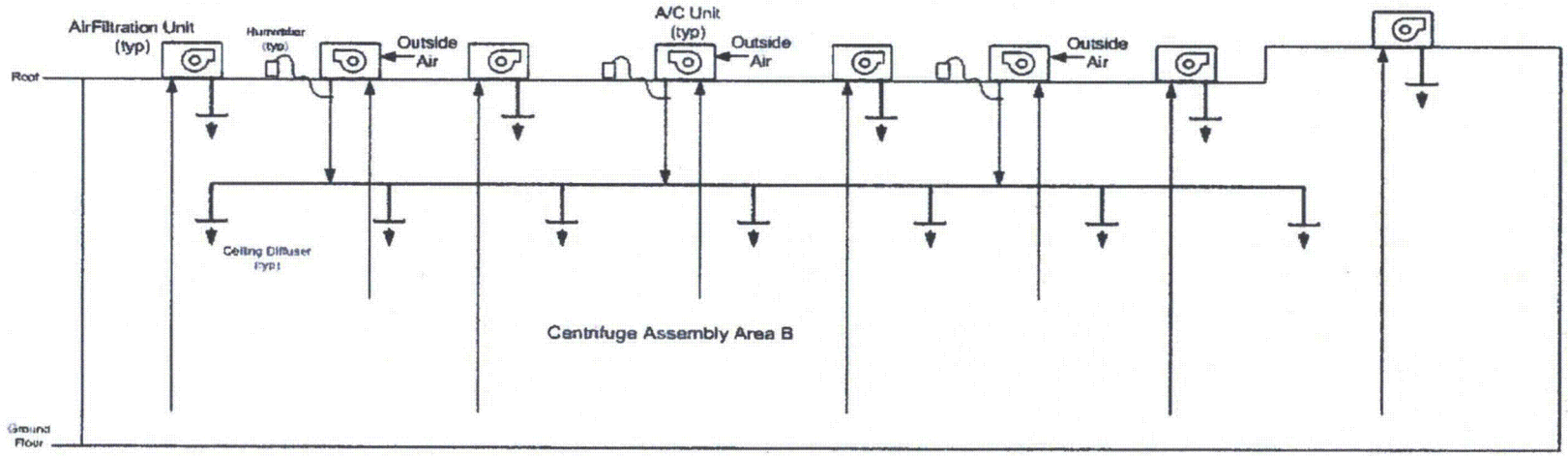

LBDCR-
10-0009

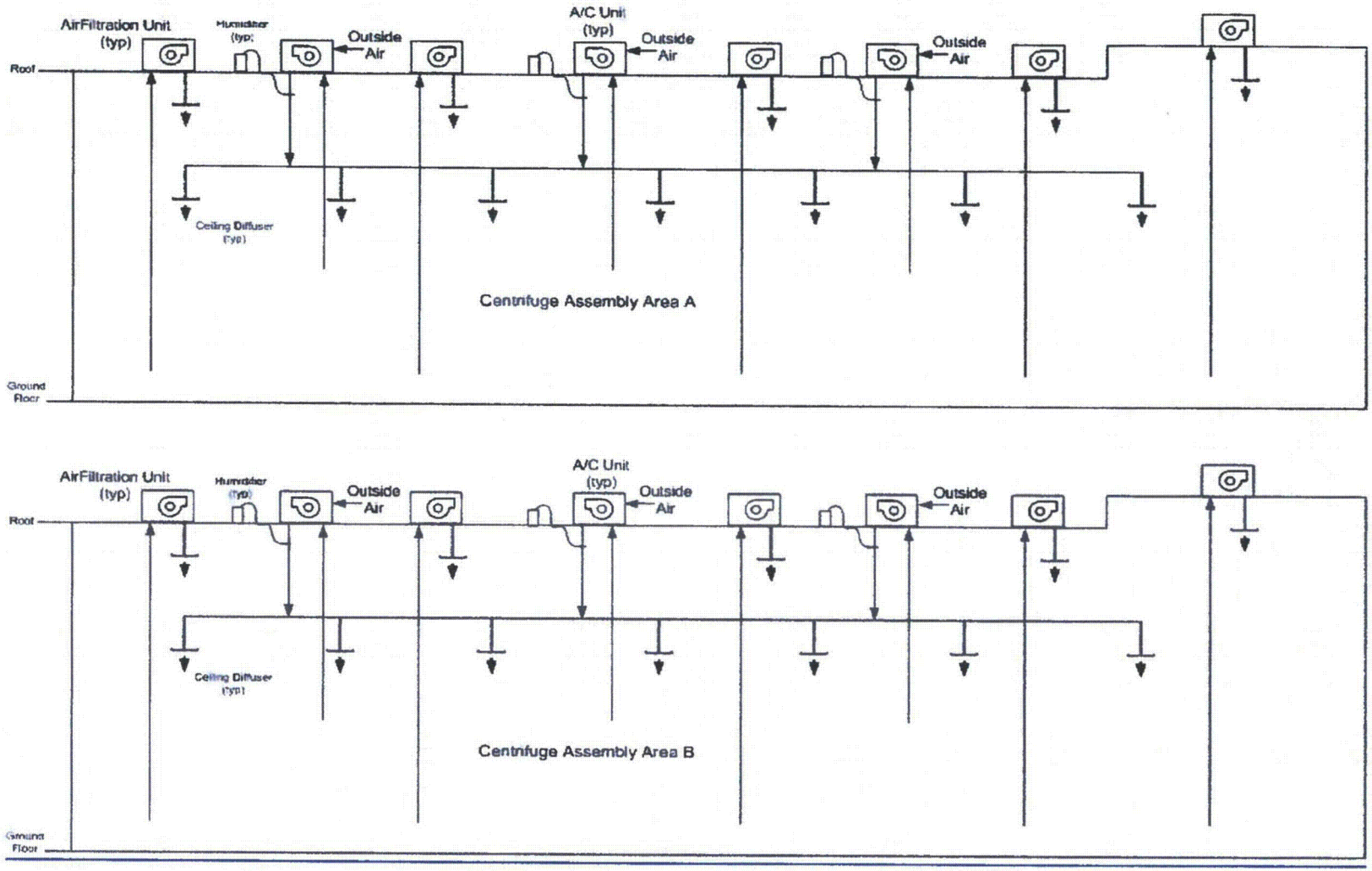

Figure 3.5-9 Flow Diagram Centrifuge Assembly Area HVAC System Sheet 1 of 2

LBDCR-
10-0009

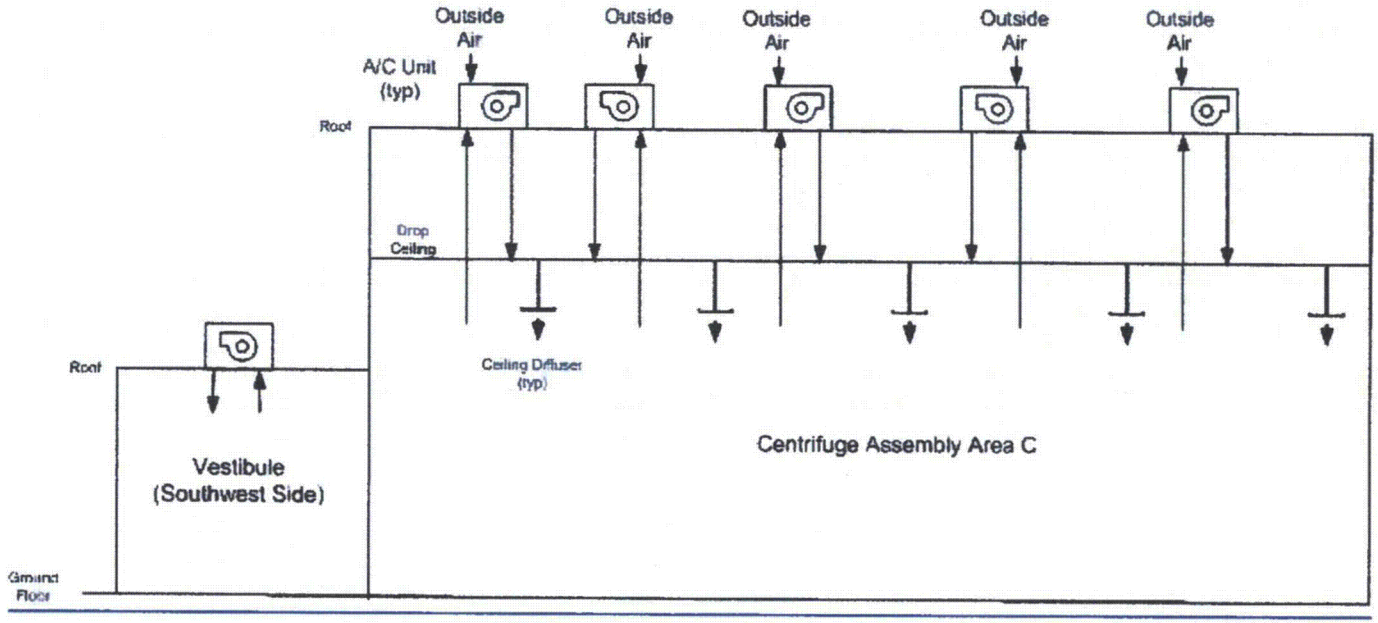

Figure 3.5-9 Flow Diagram Centrifuge Assembly Area HVAC System - Sheet 2 of 2

LBDCR-10-0009

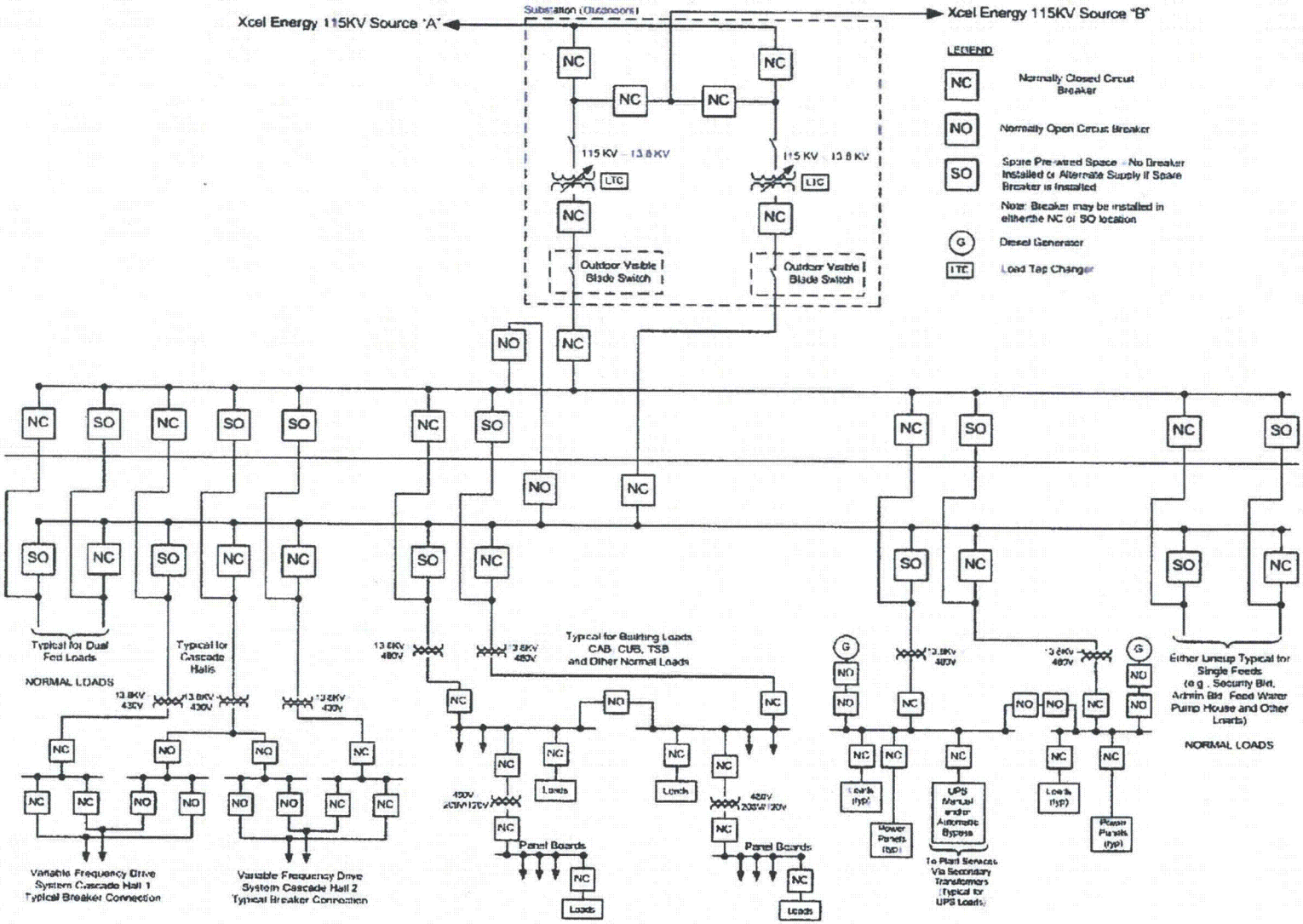

LBDCR-10-0009

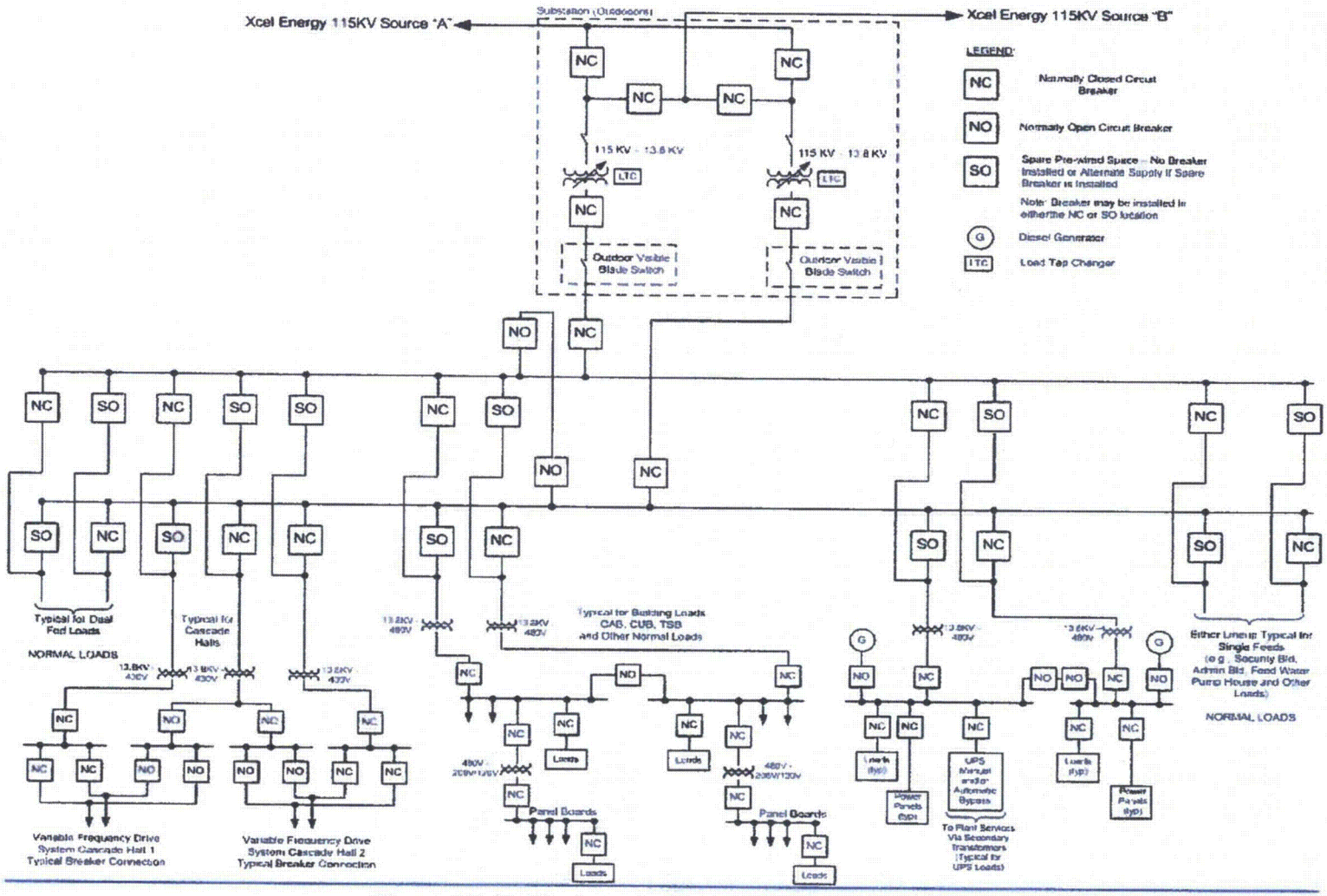

Figure 3.5-13 Single Line Diagram Electrical System

LBDCR-10-0009

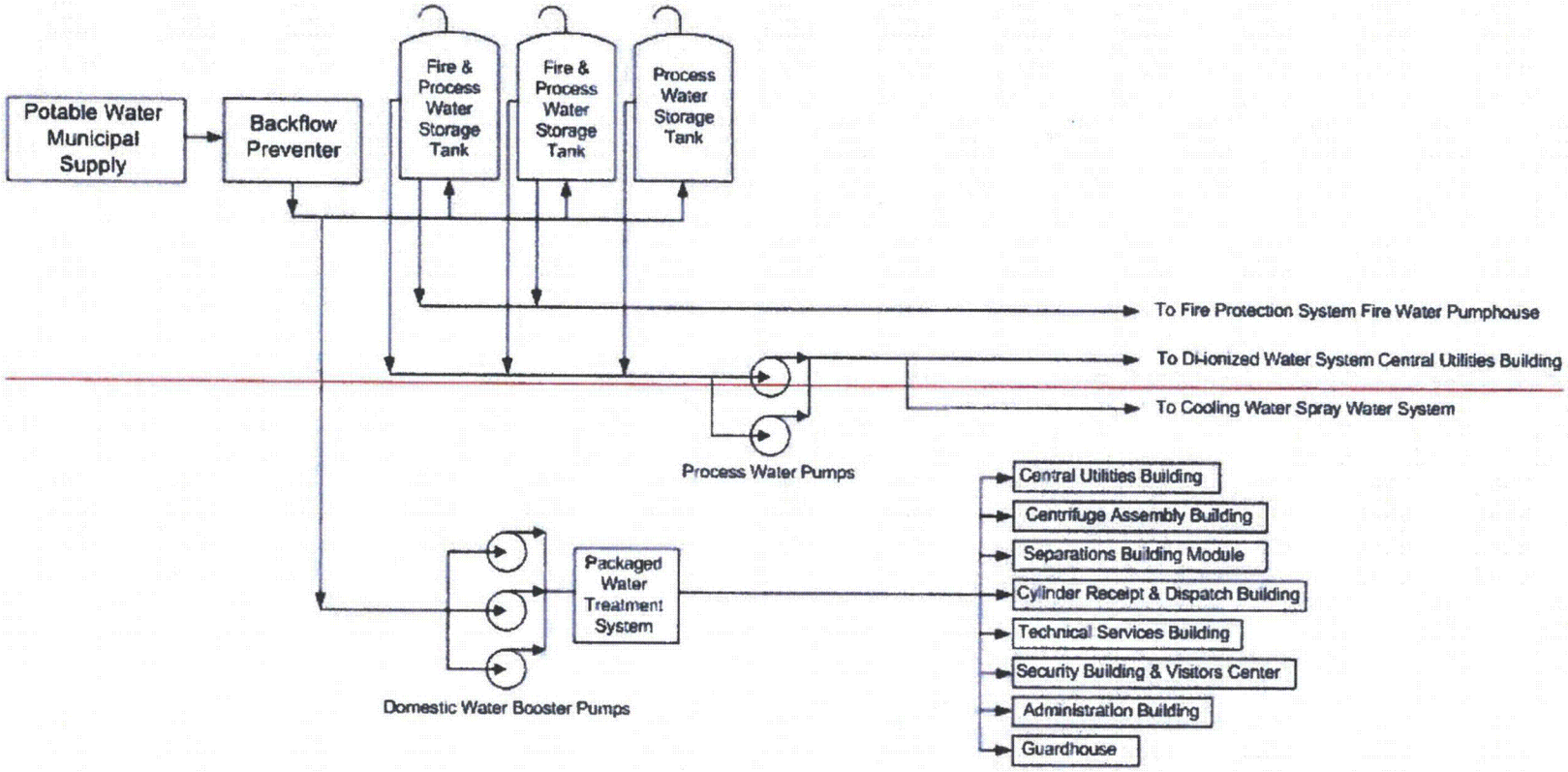

LBDCR-10-0018

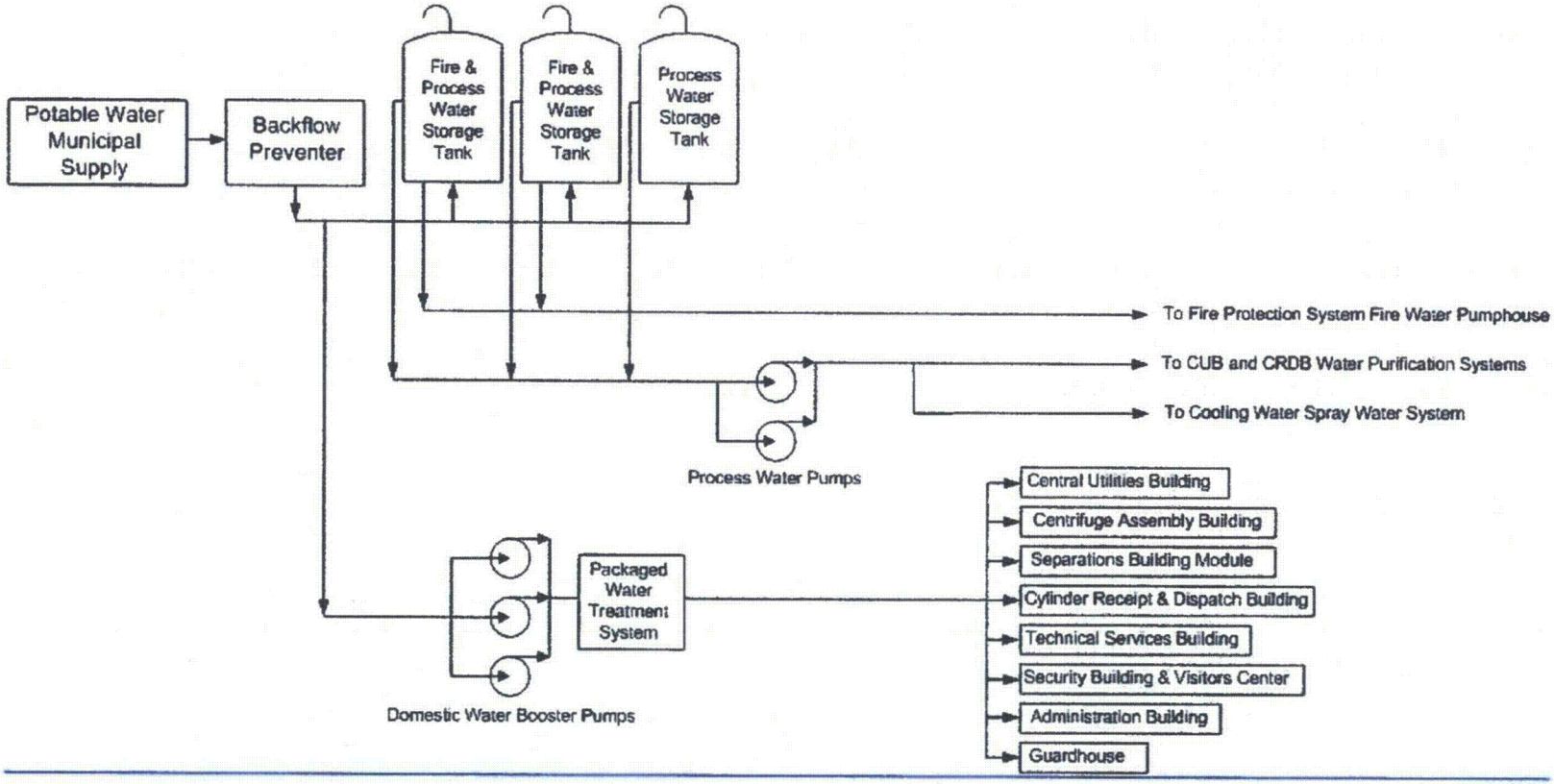

LBDCR-10-0018

Figure 3.5-15 Process Flow Diagram Process Water Distribution System

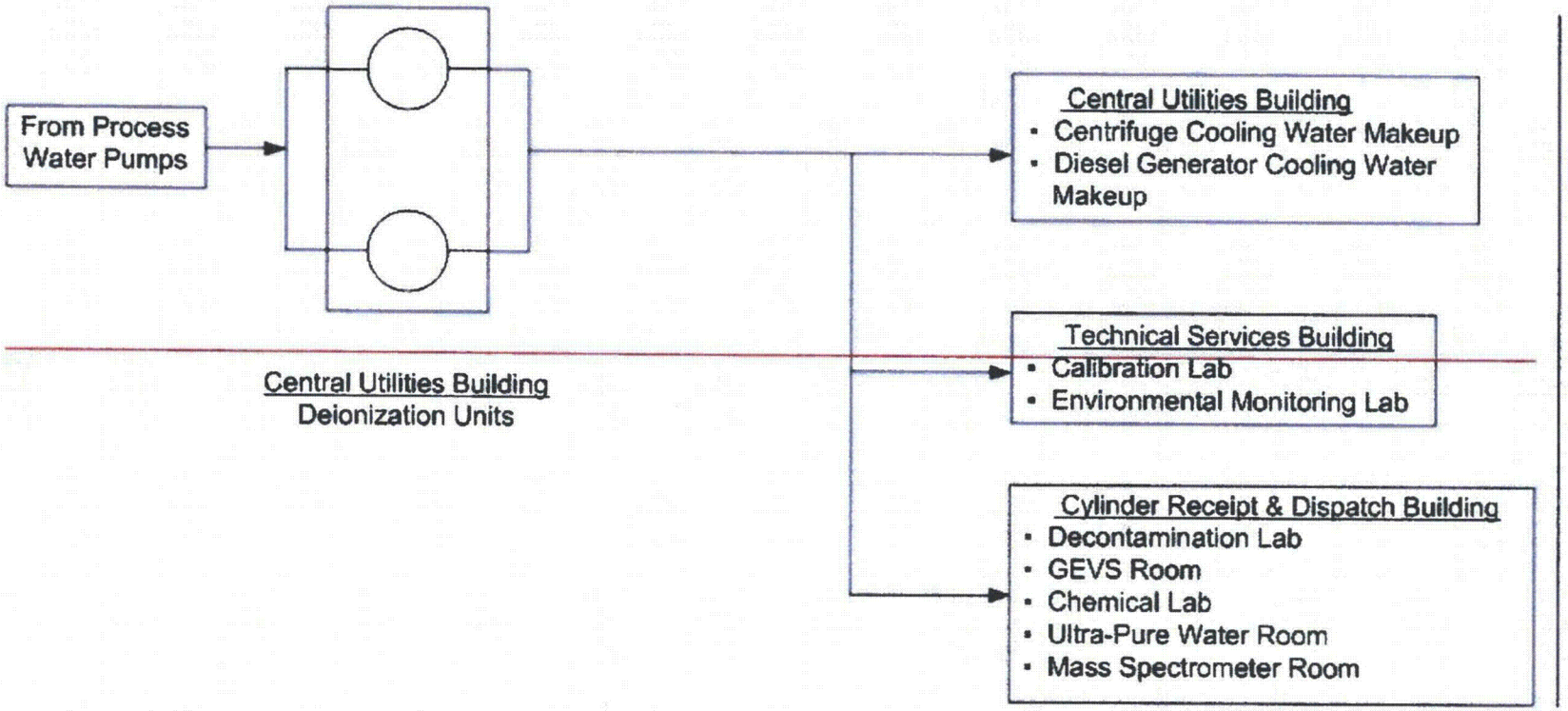

LBDCR-10-0018

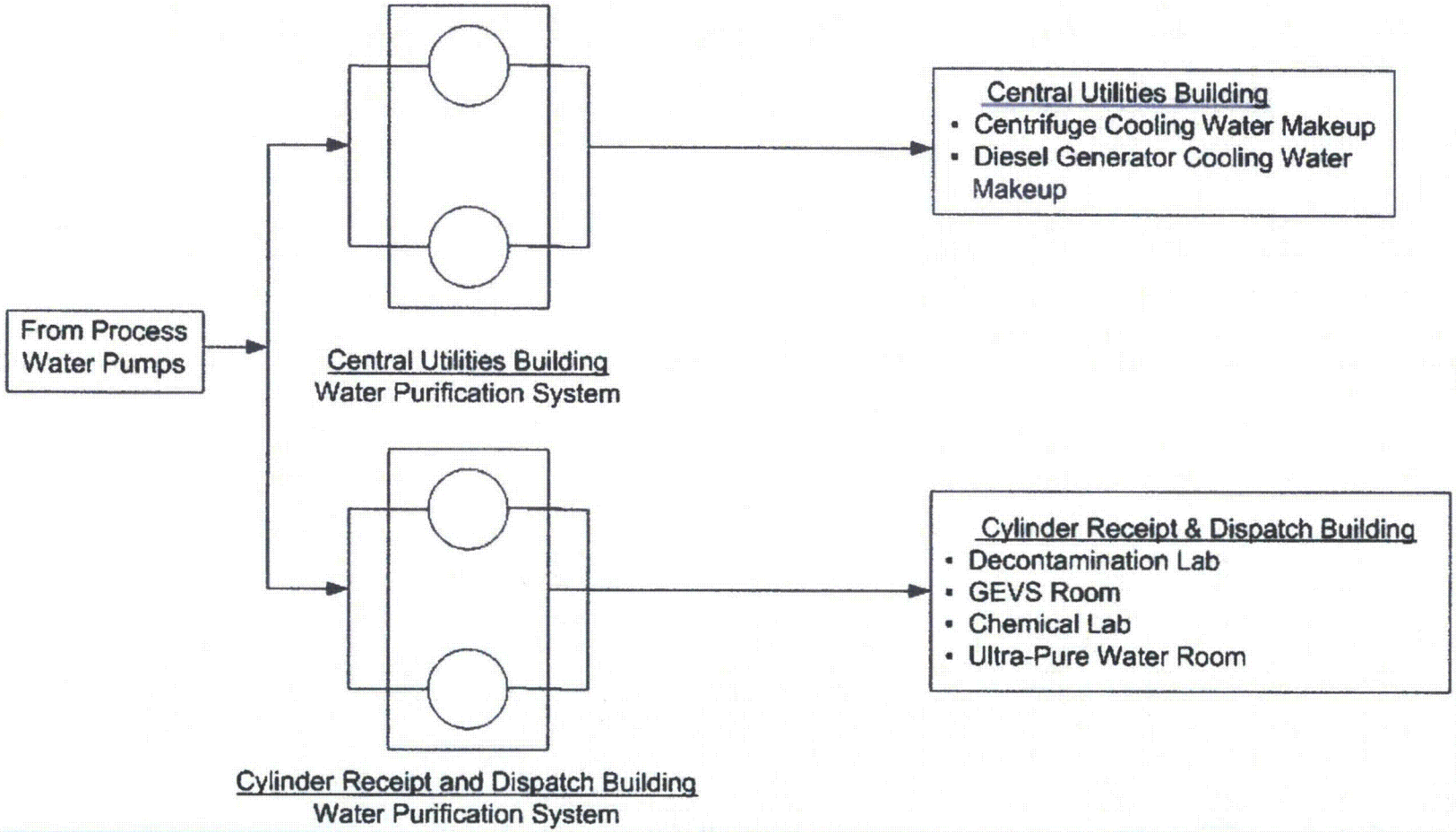

LBDCR-10-0018

Figure 3.5-16 Process Flow Diagram Process Water Distribution System

~~Figure 3.5-23 Deleted~~

3.7 GENERAL TYPES OF ACCIDENT SEQUENCES

Table 3.7-1, Accident Sequence and Risk Index, lists the potential accident sequences that were identified that could have consequences that exceed the performance criteria of 10 CFR 70.61 (CFR, 2003). The accident sequences identified in Table 3.7-1 include those from the classified and non-classified Integrated Safety Analysis (ISA). The likelihood, consequence, and risk ratings are also provided. The measures to reduce the risk to acceptable levels (Items Relied on for Safety (IROFS)) by either reducing the frequency of occurrence of the events or mitigating the consequences of the events are also identified. The reduction in risk results from the availability of the IROFS during the portion of the accident sequence for which the IROFS are credited. Additional details/descriptions of the accident sequences presented in Table 3.7-1 are provided in Table 3.7-2, Accident Sequence Descriptions. Again, these descriptions include the classified ISA results.

The results presented in Tables 3.7-1 and 3.7-2 are for the hazards identified for the process systems. The fire (external to the process systems) and external events (e.g., severe weather, seismic, transportation and industrial) hazards were assessed on a facility-wide basis and the results summarized in Tables 3.7-3, External Events and Fire Accident Sequences and Risk Index and 3.7-4, External Events and Fire Accident Descriptions. These are discussed in additional detail later in the text. Table 3.7-5, Uranic Material Assumptions for Criticality Accident Sequences, provides the assumed mass and enrichment values for ^{235}U for each of the criticality accident sequences presented in Tables 3.7-1 through 3.7-4.

The accident sequence risk assessment demonstrates that credible high-consequence events are highly unlikely and credible intermediate-consequence events are unlikely. IROFS necessary to prevent or mitigate event sequences that exceed 10 CFR 70.61 (CFR, 2003) criteria have been identified.

The definitions for the contents of each column in the accident summary tabulation in Table 3.7 1 and Table 3.7 3 are provided below. The ISA methodology is described in Section 3.1, General ISA Information.

Accident Identifier

This column identifies the accident sequence being analyzed. The ISA will have all accident sequences for each uniquely identified facility process. The accident sequence identifier has the format AAB-C where AA is the system/area from the table below, B is the Hazard ~~and Operability (HAZOP)~~ Analysis node number and C is the accident sequence number. LBDCR-10-0044

Accident Sequence System Identifier	
Identifier (AA)	**System/Area**
CL	Chemical Laboratory
CP	Cylinder Preparation
DS	Decontamination
EC	Cascade
FR	PFPE Oil Recovery
LT	Liquid Effluent Treatment
LW	Liquid Effluent Collection
MS	Mass Spectrometry Laboratory
OC	Operate While Constructing
PB	Product Blending and Liquid Sampling
PT	Product Take-Off
RD	Cylinder Receipt and Dispatch
SW	Solid Waste Collection
TP	CentrifugeTest/Centrifuge Post Mortem
TT	Tails Take-Off
TVR	~~Temporary~~ Ventilated Storage Room
UF	UF_6 Feed
VR	Ventilated Room

LBDCR-10-0044

LBDCR-10-0033

LBDCR-10-0007

Initiating Event Index (Column a)

This column lists initiating events or IROFS failures that are typically identified in the Process Hazard Analysis (PHA) phase of the ISA and that may lead to consequences exceeding those identified in 10 CFR 70.61 (CFR, 2003). Initiating events are of several distinct types: (1) external events, such as hurricanes and earthquakes; (2) facility events external to the node being analyzed (e.g., fires, explosions, failures of other equipment, flooding from facility water sources); (3) deviations from normal operations of the process in the node (i.e., credible abnormal events); and (4) failures of IROFS of the node. The tabulated initiating events consist of those that involve an actual or assumed failure of IROFS or that cause a demand requiring IROFS to function to prevent consequences exceeding 10 CFR 70.61 (CFR, 2003) levels. The frequency index number for initiating events is given in the table in column (a)." Table 3.1-9, Failure Frequency Index Numbers, provides criteria for assigning a value to the frequency index.

Table 3.7-1 Accident Sequence and Risk Index

Accident Identifier	Initiating Event Index	Preventive Safety Parameter 1 or IROFS 1 Failure Index	Preventive Safety Parameter 2 or IROFS 2 Failure Index	Mitigation IROFS Failure Index	Likelihood Index T Uncontrolled (U) / Controlled (C)	Likelihood Category	Conseq. Category (Type of Accident)	Risk Index (h=f x g) Uncontrolled (U) / Controlled (C)	Comments and Recommendations
	(a)	(b)	(c)	(d)	(e)	(f)	(g)	(h)	
TT2-1	-2	N/A	N/A	N/A	-2 (U)	3	3 (T)	9 (U)	IROFS Required
TT2-1	-2	(IROFS1) -2	(IROFS2) -2	N/A	-6 (C)	1	3 (T)	3 (C)	Acceptable Risk
TT2-2	-2	N/A	N/A	N/A	-2 (U)	3	3 (T)	9 (U)	IROFS Required
TT2-2	-2	(IROFS38) -3	N/A	N/A	-5 (C)	1	3 (T)	3 (C)	Acceptable Risk
TT3-1	-2	N/A	N/A	N/A	-2 (U)	3	3 (T)	9 (U)	IROFS Required
TT3-1	-2		N/A	(IROFSC21) (Failure, -3)	-5 (C)	1	3 (T)	3 (C)	Acceptable Risk
TT3-1	-2		N/A	(IROFSC21) (Success)	-2 (C)	3	1 (T)	3 (C)	Acceptable Risk
UF1-1	-2	N/A	N/A	N/A	-2 (U)	3	3 (T)	9 (U)	IROFS Required
UF1-1	-2	(IROFS4) -2	(IROFS5) -2	N/A	-6 (C)	1	3 (T)	3 (C)	Acceptable Risk
UF2-1	-2	N/A	N/A	N/A	-2 (U)	3	3 (T)	9 (U)	IROFS Required
UF2-1	-2	(IROFS1) -2	(IROFS2) -2	N/A	-6 (C)	1	3 (T)	3 (C)	Acceptable Risk
UF2-2	-2	N/A	N/A	N/A	-2 (U)	3	3 (T)	9 (U)	IROFS Required
UF2-2	-2	(IROFS38) -3	N/A	N/A	-5 (C)	1	3 (T)	3 (C)	Acceptable Risk
UF2-3	-2	N/A	N/A	N/A	-2 (U)	3	3 (T)	9 (U)	IROFS Required
UF2-3	-2	N/A	N/A	(IROFSC21) (Failure, -3)	-5 (C)	1	3 (T)	3 (C)	Acceptable Risk
UF2-3	-2	N/A	N/A	(IROFSC21) (Success)	-2 (C)	3	1 (T)	3 (C)	Acceptable Risk
~~UF3-1~~	~~-2~~	~~N/A~~	~~N/A~~	~~N/A~~	~~-2 (U)~~	~~3~~	~~3 (T)~~	~~9 (U)~~	~~IROFS Required~~

LBDCR-09-0141

Table 3.7-1 Accident Sequence and Risk Index

Accident Identifier	Initiating Event Index	Preventive Safety Parameter 1 or IROFS 1 Failure Index	Preventive Safety Parameter 2 or IROFS 2 Failure Index	Mitigation IROFS Failure Index	Likelihood Index T Uncontrolled (U) / Controlled (C)	Likelihood Category	Conseq. Category (Type of Accident)	Risk Index (h=f x g) Uncontrolled (U) / Controlled (C)	Comments and Recommendations
	(a)	(b)	(c)	(d)	(e)	(f)	(g)	(h)	
~~UF3-1~~	~~-2~~	~~(IROFS3) (Failure, -2)~~	~~N/A~~	~~(IROFS47a) (Failure, -3)~~	~~-7 (C)~~	~~1~~	~~3 (T)~~	~~3 (C)~~	~~Acceptable Risk~~
PT2-4	-2	N/A	N/A	N/A	-2 (U)	3	3 (T)	9 (U)	IROFS Required
PT2-4	-2	(IROFS38) -3	N/A	N/A	-5 (C)	1	3 (T)	3 (C)	Acceptable Risk
PT2-5	(IROFS30a) -1	N/A	N/A	N/A	-1 (U)	3	3 (CR)	9 (U)	IROFS Required
PT2-5	(IROFS30a) -1	(IROFS30b) -2	(IROFS30c) -2	N/A	-5 (C)	1	3 (CR)	3 (C)	Acceptable Risk
~~PT3-2~~	~~-2~~	~~N/A~~	~~N/A~~	~~N/A~~	~~-2 (U)~~	~~3~~	~~3 (T)~~	~~9 (U)~~	~~IROFS Required~~
~~PT3-2~~	~~-2~~	~~(IROFS3) (Failure, -2)~~	~~N/A~~	~~(IROFS47a) (Failure, -3)~~	~~-7 (C)~~	~~1~~	~~3 (T)~~	~~3 (C)~~	~~Acceptable Risk~~
~~PT3-2~~	~~-2~~	~~(IROFS3) (Failure, -2)~~	~~N/A~~	~~(IROFS47a) (Success)~~	~~-4 (C)~~	~~2~~	~~2 (T)~~	~~4 (C)~~	~~Acceptable Risk~~
~~PT3-2~~	~~-2~~	~~(IROFS3) (Success)~~	~~N/A~~	~~(IROFS47a) (Failure, -3)~~	~~-5 (C)~~	~~1~~	~~3 (T)~~	~~3 (C)~~	~~Acceptable Risk~~
PT3-5	-2	N/A	N/A	N/A	-2 (U)	3	3 (CR)	9 (U)	IROFS Required
PT3-5	-2	(IROFS15) -3	N/A	N/A	-5 (C)	1	3 (CR)	3 (C)	Acceptable Risk
PT5-1	-2	N/A	N/A	N/A	-2(U)	3	3 (T)	9(U)	IROFS Required
PT5-1	-2	N/A	N/A	(IROFSC21) Success	-2(C)	3	1 (T)	3 (C)	Acceptable Risk
PT5-1	-2	N/A	N/A	(IROFSC21) (Failure -3)	-5(C)	1	3 (T)	3 (C)	Acceptable Risk)
PB1-1	-2	N/A	N/A	N/A	-2 (U)	3	3 (T)	9 (U)	IROFS Required
PB1-1	-2	(IROFS4) -2	(IROFS5) -2	N/A	-6 (C)	1	3 (T)	3 (C)	Acceptable Risk

LBDCR-09-0141

~~Table 3.7-7 Product System~~

~~Criticality Assessment of Passive Safe-By-Design Components~~				
~~Component Description (A)~~	~~Sequence ID (B)~~	~~Critical Design Attribute (C)~~	~~Review of Up-Set Conditions to Change Geometry (Applicable HAZOP Guidewords) (D)~~	~~Notes/Comments (E)~~
~~Product Piping (largest pipe ID in system)~~	~~LOSS OF SAFE-BY-DESIGN ATTRIBUTE~~	~~DIAMETER 24.4 cm (ID) Keff = 1.0 @ 6 wt %~~		~~Based on qualitative assessment, there is margin between the parameter values at normal operating conditions of pipe diameter, amount of ^{235}U and enrichment and the conservative design/analysis values for these parameters assumed for criticality.~~
			~~More Heat~~	~~Based on qualitative assessment, it is highly unlikely for a process deviation to result in a more heat condition that would cause an approach to the critical safe diameter and to adversely affect the maintenance of margin to criticality associated with design and maximum operating parameter values for amount of ^{235}U and enrichment.~~
			~~More Pressure~~	~~Based on qualitative assessment, it is highly unlikely for a process deviation to result in a more pressure condition that would cause an approach to the critical safe diameter and to adversely affect the maintenance of margin to criticality associated with design and maximum operating parameter values for amount of ^{235}U and enrichment.~~
			~~Corrosion/ Erosion~~	~~Based on qualitative assessment, it is highly unlikely for a process deviation to result in a corrosion/erosion condition that would cause an approach to the critical safe diameter. Materials are corrosion/erosion resistant and postulated complete wall erosion would not exceed the critical safe diameter.~~
			~~Loss of Confinement or Leakage~~	~~Based on qualitative assessment, postulated loss of piping system confinement or leakage will not result in any appreciable accumulation of ^{235}U material because of physical limitations of the process (sub-atmospheric). As a result, loss of confinement does not result in a potential for criticality and therefore its consequence is low.~~
			~~Fire~~	~~Components shall be protected from fire to ensure the critical design attribute of diameter is not adversely impacted.~~
			~~Maintenance~~	~~Configuration Management shall ensure that maintenance does not adversely impact the critical design attribute of diameter.~~
				~~Double Contingency Principle is satisfied as follows. The geometry is criticality safe and no single credible event or failure has been identified whereby the geometry could become unsafe. The enrichment is also controlled such that no single credible failure could result in loss of enrichment control.~~
~~Product Piping Arrangement~~	~~LOSS OF SAFE-BY-DESIGN ATTRIBUTE~~	~~PHYSICAL ARRANGEMENT~~		~~Based on qualitative assessment, there is margin between the normal operating conditions and the conservative design/analysis conditions assumed for criticality.~~
			~~More Heat~~	~~Based on qualitative assessment, it is highly unlikely for a process deviation to result in a more heat condition that would adversely affect the maintenance of margin to criticality associated with design and maximum operating parameter values for amount of ^{235}U and enrichment.~~

~~Table 3.7-7 Product System~~

~~Criticality Assessment of Passive Safe-By-Design Components~~				
~~Component Description (A)~~	~~Sequence ID (B)~~	~~Critical Design Attribute (C)~~	~~Review of Up-Set Conditions to Change Geometry (Applicable HAZOP Guidewords) (D)~~	~~Notes/Comments (E)~~
			~~More Pressure~~	~~Based on qualitative assessment, it is highly unlikely for a process deviation to result in a more pressure condition that would adversely affect the maintenance of margin to criticality associated with design and maximum operating parameter values for amount of ^{235}U and enrichment.~~
			~~Corrosion/ Erosion~~	~~Based on qualitative assessment, it is highly unlikely for a process deviation to result in a corrosion/erosion condition that would affect the maintenance of margin to criticality associated with design and maximum operating parameter values for physical arrangement.~~
			~~Loss of Confinement or Leakage~~	~~Based on qualitative assessment, postulated loss of piping system confinement or leakage will not result in any appreciable accumulation of ^{235}U material because of physical limitations of the process (sub-atmospheric). As a result, loss of confinement does not result in a potential for criticality and therefore its consequence is low.~~
			~~Fire~~	~~Components shall be protected from fire to ensure the critical design attribute of physical arrangement is not adversely impacted.~~
			~~Maintenance~~	~~Configuration Management shall ensure that maintenance does not adversely impact the critical design attribute of physical arrangement.~~
			~~Impact/Drop~~	~~Components shall be protected from impact/drop to ensure the critical design attribute of physical arrangement is not adversely impacted.~~
			~~External Events (Construction on Site)~~	~~Components shall be protected from construction on Site to ensure the critical design attribute of physical arrangement is not adversely impacted.~~
			~~External Events (Failure of Above Ground Liquid Storage Tanks)~~	~~Components shall be protected from external flooding (Failure of Above Ground Liquid Storage Tanks) to ensure the critical design attribute of physical arrangement is not adversely impacted.~~
			~~External Events (External Fire)~~	~~Components shall be protected from external fire events to ensure the critical design attribute of physical arrangement is not adversely impacted.~~
				~~Double Contingency Principle is satisfied as follows. The geometry is criticality safe and no single credible event or failure has been identified whereby the geometry could become unsafe. The enrichment is also controlled such that no single credible failure could result in loss of enrichment control.~~
~~Product Pump Set~~	~~LOSS OF SAFE-BY-DESIGN ATTRIBUTE~~	~~PHYSICAL ARRANGEMENT~~		~~Based on qualitative assessment, there is margin between the normal operating conditions and the conservative design/analysis conditions assumed for criticality.~~
			~~More Heat~~	~~Based on qualitative assessment, it is highly unlikely for a process deviation to result in a more heat condition that would adversely affect the maintenance of margin to criticality associated with design and maximum operating parameter values for amount of ^{235}U and enrichment.~~

~~Table 3.7-7 Product System~~

~~Criticality Assessment of Passive Safe By Design Components~~				
~~Component Description (A)~~	~~Sequence ID (B)~~	~~Critical Design Attribute (C)~~	~~Review of Up-Set Conditions to Change Geometry (Applicable HAZOP Guidewords) (D)~~	~~Notes/Comments (E)~~
			~~More Pressure~~	~~Based on qualitative assessment, it is highly unlikely for a process deviation to result in a more pressure condition that would adversely affect the maintenance of margin to criticality associated with design and maximum operating parameter values for amount of ^{235}U and enrichment.~~
			~~Corrosion/ Erosion~~	~~Based on qualitative assessment, it is highly unlikely for a process deviation to result in a corrosion/erosion condition that would affect the maintenance of margin to criticality associated with design and maximum operating parameter values for physical arrangement.~~
			~~Loss of Confinement or Leakage~~	~~Based on qualitative assessment, postulated loss of Product Pump Set confinement or leakage will not result in any appreciable accumulation of ^{235}U material because of physical limitations of the process (sub-atmospheric). As a result, loss of confinement does not result in a potential for criticality and therefore its consequence is low.~~
			~~Fire~~	~~Components shall be protected from fire to ensure the critical design attribute of physical arrangement is not adversely impacted.~~
			~~Maintenance~~	~~Configuration Management shall ensure that maintenance does not adversely impact the critical design attribute of physical arrangement.~~
			~~Impact/Drop~~	~~Components shall be protected from impact/drop to ensure the critical design attribute of physical arrangement is not adversely impacted.~~
			~~External Events (Construction on Site)~~	~~Components shall be protected from construction on site to ensure the critical design attribute of physical arrangement is not adversely impacted.~~
			~~External Events (Failure of Above Ground Liquid Storage Tanks)~~	~~Components shall be protected from external flooding (Failure of Above-Ground Liquid Storage Tanks) to ensure the critical design attribute of physical arrangement is not adversely impacted.~~
			~~External Events (External Fire)~~	~~Components shall be protected from external fire events to ensure the critical design attribute of physical arrangement is not adversely impacted.~~
				~~Double Contingency Principle is satisfied as follows. The geometry is criticality safe and no single credible event or failure has been identified whereby the geometry could become unsafe. The enrichment is also controlled such that no single credible failure could result in loss of enrichment control.~~

~~Table 3.7-7 Product System~~

~~Criticality Assessment of Passive Safe-By-Design Components~~				
~~Component Description (A)~~	~~Sequence ID (B)~~	~~Critical Design Attribute (C)~~	~~Review of Up-Set Conditions to Change Geometry (Applicable HAZOP Guidewords) (D)~~	~~Notes/Comments (E)~~
~~Product Evacuation Pump~~	~~LOSS OF SAFE-BY-DESIGN ATTRIBUTE~~	~~VOLUME 24 liters Keff = 1.0 @ 6 wt %~~		~~Based on qualitative assessment, there is margin between the parameter values at normal operating conditions of Product Evacuation Pump volume, amount of ^{235}U and enrichment and the conservative design/analysis values for these parameters assumed for criticality.~~
			~~More Heat~~	~~Based on qualitative assessment, it is highly unlikely for a process deviation to result in a more heat condition that would cause an approach to the critical safe volume and to adversely affect the maintenance of margin to criticality associated with design and maximum operating parameter values for amount of ^{235}U and enrichment.~~
			~~More Pressure~~	~~Based on qualitative assessment, it is highly unlikely for a process deviation to result in a more pressure condition that would cause an approach to the critical safe volume and to adversely affect the maintenance of margin to criticality associated with design and maximum operating parameter values for amount of ^{235}U and enrichment.~~
			~~Corrosion / Erosion~~	~~Based on qualitative assessment, it is highly unlikely for a process deviation to result in a corrosion/erosion condition that would cause an approach to the critical safe volume. Materials are corrosion/erosion resistant and postulated complete wall erosion would not exceed the critical safe volume.~~
			~~Loss of Confinement or Leakage~~	~~Based on qualitative assessment, postulated loss of Product Evacuation Pump confinement or leakage will not result in any appreciable accumulation of ^{235}U material because of physical limitations of the process (sub-atmospheric). As a result, loss of confinement does not result in a potential for criticality and therefore its consequence is low.~~
			~~Fire~~	~~Components shall be protected from fire to ensure the critical design attribute of volume is not adversely impacted.~~
			~~Maintenance~~	~~Configuration Management shall ensure that maintenance does not adversely impact the critical design attribute of volume.~~
				~~Double Contingency Principle is satisfied as follows. The geometry is criticality safe and no single credible event or failure has been identified whereby the geometry could become unsafe. The enrichment is also controlled such that no single credible failure could result in loss of enrichment control.~~
~~Product Cold Trap~~	~~LOSS OF SAFE-BY-DESIGN ATTRIBUTE~~	~~DIAMETER 24.4 cm (ID) Keff = 1.0 @ 6 wt %~~		~~Based on qualitative assessment, there is margin between the parameter values at normal operating conditions of component diameter, amount of ^{235}U and enrichment and the conservative design/analysis values for these parameters assumed for criticality.~~
			~~More Heat~~	~~Based on qualitative assessment, it is highly unlikely for a process deviation to result in a more heat condition that would cause an approach to the critical safe diameter and to adversely affect the maintenance of margin to criticality associated with design and maximum operating parameter values for amount of ^{235}U and enrichment.~~

~~Table 3.7-7 Product System~~

~~Criticality Assessment of Passive Safe By Design Components~~				
~~Component Description (A)~~	~~Sequence ID (B)~~	~~Critical Design Attribute (C)~~	~~Review of Up-Set Conditions to Change Geometry (Applicable HAZOP Guidewords) (D)~~	~~Notes/Comments (E)~~
			~~More Pressure~~	~~Based on qualitative assessment, it is highly unlikely for a process deviation to result in a more pressure condition that would cause an approach to the critical safe diameter and to adversely affect the maintenance of margin to criticality associated with design and maximum operating parameter values for amount of ^{235}U and enrichment.~~
			~~Corrosion/ Erosion~~	~~Based on qualitative assessment, it is highly unlikely for a process deviation to result in a corrosion/erosion condition that would cause an approach to the critical safe diameter. Materials are corrosion/erosion resistant and postulated complete wall erosion would not exceed the critical safe diameter.~~
			~~Loss of Confinement or Leakage~~	~~Based on qualitative assessment, postulated loss of cold trap confinement or leakage and will not result in any appreciable accumulation of material because of physical limitations of the process (sub-atmospheric). As a result, loss of confinement does not result in a potential for criticality and therefore its consequence is low.~~
			~~Fire~~	~~Components shall be protected from fire to ensure the critical design attribute of diameter is not adversely impacted.~~
			~~Maintenance~~	~~Configuration Management shall ensure that maintenance does not adversely impact the critical design attribute of diameter.~~
				~~Double Contingency Principle is satisfied as follows. The geometry is criticality safe and no single credible event or failure has been identified whereby the geometry could become unsafe. The enrichment is also controlled such that no single credible failure could result in loss of enrichment control.~~
~~Carbon Trap (Product Evacuation)~~	~~LOSS OF SAFE-BY-DESIGN ATTRIBUTE~~	~~DIAMETER 24.4 cm (ID) Keff = 1.0 @ 6 wt %~~		~~Based on qualitative assessment, there is margin between the parameter values at normal operating conditions of Carbon Trap diameter, amount of ^{235}U and enrichment and the conservative design/analysis values for these parameters assumed for criticality.~~
			~~More Heat~~	~~Based on qualitative assessment, it is highly unlikely for a process deviation to result in a more heat condition that would cause an approach to the critical safe diameter and to adversely affect the maintenance of margin to criticality associated with design and maximum operating parameter values for amount of ^{235}U and enrichment.~~
			~~More Pressure~~	~~Based on qualitative assessment, it is highly unlikely for a process deviation to result in a more pressure condition that would cause an approach to the critical safe diameter and to adversely affect the maintenance of margin to criticality associated with design and maximum operating parameter values for amount of ^{235}U and enrichment.~~
			~~Corrosion/ Erosion~~	~~Based on qualitative assessment, it is highly unlikely for a process deviation to result in a corrosion/erosion condition that would cause an approach to the critical safe diameter. Materials are corrosion/erosion resistant and postulated complete wall erosion would not exceed the critical safe diameter.~~

~~Table 3.7-7 Product System~~

~~Criticality Assessment of Passive Safe-By-Design Components~~				
~~Component Description (A)~~	~~Sequence ID (B)~~	~~Critical Design Attribute (C)~~	~~Review of Up-Set Conditions to Change Geometry (Applicable HAZOP Guidewords) (D)~~	~~Notes/Comments (E)~~
			~~Loss of Confinement or Leakage~~	~~Based on qualitative assessment, postulated loss of Carbon Trap confinement or leakage will not result in any appreciable accumulation of ^{235}U material because of physical limitations of the process (sub-atmosphere). As a result, loss of confinement does not result in a potential for criticality and therefore its consequence is low.~~
			~~Fire~~	~~Components shall be protected from fire to ensure the critical design attribute of diameter is not adversely impacted.~~
			~~Maintenance~~	~~Configuration Management shall ensure that maintenance does not adversely impact the critical design attribute of diameter.~~
				~~Double Contingency Principle is satisfied as follows. The geometry is criticality safe and no single credible event or failure has been identified whereby the geometry could become unsafe. The enrichment is also controlled such that no single credible failure could result in loss of enrichment control.~~
~~Aluminum Oxide Trap (Product Evacuation)~~	~~LOSS OF SAFE-BY-DESIGN ATTRIBUTE~~	~~DIAMETER 24.4 cm (ID) Keff = 1.0 @ 6 wt.%~~		~~Based on qualitative assessment, there is margin between the parameter values at normal operating conditions of Aluminum Oxide Trap diameter, amount of ^{235}U and enrichment and the conservative design/analysis values for these parameters assumed for criticality.~~
			~~More Heat~~	~~Based on qualitative assessment, it is highly unlikely for a process deviation to result in a more heat condition that would cause an approach to the critical safe diameter and to adversely affect the maintenance of margin to criticality associated with design and maximum operating parameter values for amount of ^{235}U and enrichment.~~
			~~More Pressure~~	~~Based on qualitative assessment, it is highly unlikely for a process deviation to result in a more pressure condition that would cause an approach to the critical safe diameter and to adversely affect the maintenance of margin to criticality associated with design and maximum operating parameter values for amount of ^{235}U and enrichment.~~
			~~Corrosion/ Erosion~~	~~Based on qualitative assessment, it is highly unlikely for a process deviation to result in a corrosion/erosion condition that would cause an approach to the critical safe diameter. Materials are corrosion/erosion resistant and postulated complete wall erosion would not exceed the critical safe diameter.~~
			~~Loss of Confinement or Leakage~~	~~Based on qualitative assessment, postulated loss of Aluminum Oxide Trap confinement or leakage will not result in any appreciable accumulation of ^{235}U material because of physical limitations of the process (sub-atmospheric). As a result, loss of confinement does not result in a potential for criticality and therefore its consequence is low.~~
			~~Fire~~	~~Components shall be protected from fire to ensure the critical design attribute of diameter is not adversely impacted.~~
			~~Maintenance~~	~~Configuration Management shall ensure that maintenance does not adversely impact the critical design attribute of diameter.~~

~~Table 3.7-7 Product System~~

~~Criticality Assessment of Passive Safe By Design Components~~				
~~Component Description (A)~~	~~Sequence ID (B)~~	~~Critical Design Attribute (C)~~	~~Review of Up-Set Conditions to Change Geometry (Applicable HAZOP Guidewords) (D)~~	~~Notes/Comments (E)~~
				~~Double Contingency Principle is satisfied as follows. The geometry is criticality safe and no single credible event or failure has been identified whereby the geometry could become unsafe. The enrichment is also controlled such that no single credible failure could result in loss of enrichment control.~~
~~Chemical Absorber Oil Trap (Product Evacuation)~~	~~LOSS OF SAFE BY DESIGN ATTRIBUTE~~	~~VOLUME~~ ~~24 liters~~ ~~Keff = 1.0 @ 6 wt %~~		~~Based on qualitative assessment, there is margin between the parameter values at normal operating conditions of Chemical Absorber Oil Trap volume, amount of ^{235}U and enrichment and the conservative design/analysis values for these parameters assumed for criticality.~~
			~~More Heat~~	~~Based on qualitative assessment, it is highly unlikely for a process deviation to result in a more heat condition that would cause an approach to the critical safe volume and to adversely affect the maintenance of margin to criticality associated with design and maximum operating parameter values for amount of ^{235}U and enrichment.~~
			~~More Pressure~~	~~Based on qualitative assessment, it is highly unlikely for a process deviation to result in a more pressure condition that would cause an approach to the critical safe volume and to adversely affect the maintenance of margin to criticality associated with design and maximum operating parameter values for amount of ^{235}U and enrichment.~~
			~~Corrosion/ Erosion~~	~~Based on qualitative assessment, it is highly unlikely for a process deviation to result in a corrosion/erosion condition that would cause an approach to the critical safe volume. Materials are corrosion/erosion resistant and postulated complete wall erosion would not exceed the critical safe volume.~~
			~~Loss of Confinement or Leakage~~	~~Based on qualitative assessment, postulated loss of Chemical Absorber Oil Trap confinement or leakage will not result in any appreciable accumulation of ^{235}U material because of physical limitations of the process (sub-atmospheric). As a result, loss of confinement does not result in a potential for criticality and therefore its consequence is low.~~
			~~Fire~~	~~Components shall be protected from fire to ensure the critical design attribute of volume is not adversely impacted.~~
			~~Maintenance~~	~~Configuration Management shall ensure that maintenance does not adversely impact the critical design attribute of volume.~~
				~~Double Contingency Principle is satisfied as follows. The geometry is criticality safe and no single credible event or failure has been identified whereby the geometry could become unsafe. The enrichment is also controlled such that no single credible failure could result in loss of enrichment control.~~

~~Table 3.7-7 Product System~~

~~Criticality Assessment of Passive Safe-By-Design Components~~				
~~Component Description (A)~~	~~Sequence ID (B)~~	~~Critical Design Attribute (C)~~	~~Review of Up-Set Conditions to Change Geometry (Applicable HAZOP Guidewords) (D)~~	~~Notes/Comments (E)~~
~~Oil Trap (Product Evacuation)~~	~~LOSS OF SAFE-BY-DESIGN ATTRIBUTE~~	~~DIAMETER 24.4 cm (ID) Keff = 1.0 @ 6 wt %~~		~~Based on qualitative assessment, there is margin between the parameter values at normal operating conditions of Oil Trap diameter, amount of ^{235}U and enrichment and the conservative design/analysis values for these parameters assumed for criticality.~~
			~~More Heat~~	~~Based on qualitative assessment, it is highly unlikely for a process deviation to result in a more heat condition that would cause an approach to the critical safe diameter and to adversely affect the maintenance of margin to criticality associated with design and maximum operating parameter values for amount of ^{235}U and enrichment.~~
			~~More Pressure~~	~~Based on qualitative assessment, it is highly unlikely for a process deviation to result in a more pressure condition that would cause an approach to the critical safe diameter and to adversely affect the maintenance of margin to criticality associated with design and maximum operating parameter values for amount of ^{235}U and enrichment.~~
			~~Corrosion/ Erosion~~	~~Based on qualitative assessment, it is highly unlikely for a process deviation to result in a corrosion/erosion condition that would cause an approach to the critical safe diameter. Materials are corrosion/erosion resistant and postulated complete wall erosion would not exceed the critical safe diameter.~~
			~~Loss of Confinement or Leakage~~	~~Based on qualitative assessment, postulated loss of Oil Trap confinement or leakage will not result in any appreciable accumulation of ^{235}U material because of physical limitations of the process (sub-atmospheric). As a result, loss of confinement does not result in a potential for criticality and therefore its consequence is low.~~
			~~Fire~~	~~Components shall be protected from fire to ensure the critical design attribute of diameter is not adversely impacted.~~
			~~Maintenance~~	~~Configuration Management shall ensure that maintenance does not adversely impact the critical design attribute of diameter.~~
				~~Double Contingency Principle is satisfied as follows. The geometry is criticality safe and no single credible event or failure has been identified whereby the geometry could become unsafe. The enrichment is also controlled such that no single credible failure could result in loss of enrichment control.~~
~~Vacuum Cleaner~~	~~LOSS OF SAFE-BY-DESIGN ATTRIBUTE~~	~~DIAMETER 24.4 cm (ID) Keff = 1.0 @ 6 wt %~~		~~Based on qualitative assessment, there is margin between the parameter value at normal operating conditions of Vacuum Cleaner diameter and the conservative design/analysis value for this parameter assumed for criticality.~~
			~~More Heat~~	~~Based on qualitative assessment, it is highly unlikely for a process deviation to result in a more heat condition that would cause an approach to the critical safe diameter and to adversely affect the maintenance of margin to criticality associated with design and maximum operating parameter value.~~

~~Table 3.7-7 Product System~~

~~Criticality Assessment of Passive Safe By Design Components~~				
~~Component Description (A)~~	~~Sequence ID (B)~~	~~Critical Design Attribute (C)~~	~~Review of Up-Set Conditions to Change Geometry (Applicable HAZOP Guidewords) (D)~~	~~Notes/Comments (E)~~
			~~More Pressure~~	~~Based on qualitative assessment, it is highly unlikely for a process deviation to result in a more pressure condition that would cause an approach to the critical safe diameter and to adversely affect the maintenance of margin to criticality associated with design and maximum operating parameter value.~~
			~~Corrosion/ Erosion~~	~~Based on qualitative assessment, it is highly unlikely for a process deviation to result in a corrosion/erosion condition that would cause an approach to the critical safe diameter. Materials are corrosion/erosion resistant and postulated complete wall erosion would not exceed the critical safe diameter.~~
			~~Loss of Confinement or Leakage~~	~~Based on qualitative assessment, postulated loss of Vacuum Cleaner confinement or leakage will not result in any appreciable accumulation of ^{235}U. As a result, loss of confinement does not result in a potential for criticality and therefore its consequence is low.~~
			~~Fire~~	~~Components shall be protected from fire to ensure the critical design attribute of diameter is not adversely impacted.~~
			~~Maintenance~~	~~Configuration Management shall ensure that maintenance does not adversely impact the critical design attribute of diameter.~~
			~~Impact/Drop~~	~~Components shall be protected from Impact/Drop to ensure the critical design attribute of diameter is not adversely impacted.~~
			~~External Events (Construction on Site)~~	~~Components shall be protected from Construction on Site to ensure the critical design attribute of diameter is not adversely impacted.~~
			~~External Events (Failure of Above Ground Liquid Tanks)~~	~~Components shall be protected from Failure of Above-Ground Liquid Tanks to ensure the critical design attribute of diameter is not adversely impacted.~~
				~~Double Contingency Principle is satisfied as follows. The geometry is criticality safe and no single credible event or failure has been identified whereby the geometry could become unsafe. The enrichment is also controlled such that no single credible failure could result in loss of enrichment control.~~
~~Product Evacuation Pump/Chemical Trap Set~~	~~LOSS OF SAFE-BY-DESIGN ATTRIBUTE~~	~~PHYSICAL ARRANGEMENT~~		~~Based on qualitative assessment, there is margin between the normal operating conditions and the conservative design/analysis conditions assumed for criticality.~~
			~~More Heat~~	~~Based on qualitative assessment, it is highly unlikely for a process deviation to result in a more heat condition that would adversely affect the maintenance of margin to criticality associated with design and maximum operating parameter values for amount of ^{235}U and enrichment.~~
			~~More Pressure~~	~~Based on qualitative assessment, it is highly unlikely for a process deviation to result in a more pressure condition that would adversely affect the maintenance of margin to criticality associated with design and maximum operating parameter values for amount of ^{235}U and enrichment.~~

~~Table 3.7-7 Product System~~

~~Criticality Assessment of Passive Safe By Design Components~~				
~~Component Description (A)~~	~~Sequence ID (B)~~	~~Critical Design Attribute (C)~~	~~Review of Up-Set Conditions to Change Geometry (Applicable HAZOP Guidewords) (D)~~	~~Notes/Comments (E)~~
			~~Corrosion/ Erosion~~	~~Based on qualitative assessment, it is highly unlikely for a process deviation to result in a corrosion/erosion condition that would affect the maintenance of margin to criticality associated with design and maximum operating parameter values for physical arrangement.~~
			~~Loss of Confinement or Leakage~~	~~Based on qualitative assessment, postulated loss of Product Evacuation Pump/Chemical Trap Set confinement or leakage will not result in any appreciable accumulation of ^{235}U material because of physical limitations of the process (sub-atmospheric). As a result, loss of confinement does not result in a potential for criticality and therefore its consequence is low.~~
			~~Fire~~	~~Components shall be protected from fire to ensure the critical design attribute of physical arrangement is not adversely impacted.~~
			~~Maintenance~~	~~Configuration Management shall ensure that maintenance does not adversely impact the critical design attribute of physical arrangement.~~
			~~Impact/Drop~~	~~Components shall be protected from impact/drop to ensure the critical design attribute of physical arrangement is not adversely impacted.~~
			~~External Events (Construction on Site)~~	~~Components shall be protected from construction on Site to ensure the critical design attribute of physical arrangement is not adversely impacted.~~
			~~External Events (Failure of Above-Ground Liquid Storage Tanks)~~	~~Components shall be protected from external flooding (Failure of Above-Ground Liquid Storage Tanks) to ensure the critical design attribute of physical arrangement is not adversely impacted.~~
			~~External Events (External Fire)~~	~~Components shall be protected from external fire events to ensure the critical design attribute of physical arrangement is not adversely impacted.~~
				~~Double Contingency Principle is satisfied as follows. The geometry is criticality safe and no single credible event or failure has been identified whereby the geometry could become unsafe. The enrichment is also controlled such that no single credible failure could result in loss of enrichment control.~~
~~Pump Transport Device~~	~~LOSS OF SAFE-BY-DESIGN ATTRIBUTE~~	~~PHYSICAL ARRANGEMENT~~		~~Based on qualitative assessment, there is margin between the normal operating conditions and the conservative design/analysis conditions assumed for criticality.~~
			~~Corrosion/ Erosion~~	~~Based on qualitative assessment, it is highly unlikely for a process deviation to result in a corrosion/erosion condition that would affect the maintenance of margin to criticality associated with design and maximum operating parameter values for physical arrangement.~~
			~~Fire~~	~~Components shall be protected from fire to ensure the critical design attribute of physical arrangement is not adversely impacted.~~

~~Table 3.7-7 Product System~~

~~Criticality Assessment of Passive Safe-By-Design Components~~				
~~Component Description (A)~~	~~Sequence ID (B)~~	~~Critical Design Attribute (C)~~	~~Review of Up-Set Conditions to Change Geometry (Applicable HAZOP Guidewords) (D)~~	~~Notes/Comments (E)~~
			~~Maintenance~~	~~Configuration Management shall ensure that maintenance does not adversely impact the critical design attribute of physical arrangement.~~
			~~Impact/Drop~~	~~Components shall be protected from impact/drop to ensure the critical design attribute of physical arrangement is not adversely impacted.~~
			~~External Events (Construction on Site)~~	~~Components shall be protected from construction on-Site to ensure the critical design attribute of physical arrangement is not adversely impacted.~~
			~~External Events (Failure of Above-Ground Liquid Storage Tanks)~~	~~Components shall be protected from external flooding (Failure of Above-Ground Liquid Storage Tanks) to ensure the critical design attribute of physical arrangement is not adversely impacted.~~
			~~External Events (External Fire)~~	~~Components shall be protected from external fire events to ensure the critical design attribute of physical arrangement is not adversely impacted.~~
				~~Double Contingency Principle is satisfied as follows. The geometry is criticality safe and no single credible event or failure has been identified whereby the geometry could become unsafe. The enrichment is also controlled such that no single credible failure could result in loss of enrichment control.~~
~~Chemical Trap Transport Device~~	~~LOSS OF SAFE-BY-DESIGN ATTRIBUTE~~	~~PHYSICAL ARRANGEMENT~~		~~Based on qualitative assessment, there is margin between the normal operating conditions and the conservative design/analysis conditions assumed for criticality.~~
			~~Corrosion/ Erosion~~	~~Based on qualitative assessment, it is highly unlikely for a process deviation to result in a corrosion/erosion condition that would affect the maintenance of margin to criticality associated with design and maximum operating parameter values for physical arrangement.~~
			~~Fire~~	~~Components shall be protected from fire to ensure the critical design attribute of physical arrangement is not adversely impacted.~~
			~~Maintenance~~	~~Configuration Management shall ensure that maintenance does not adversely impact the critical design attribute of physical arrangement.~~
			~~Impact/Drop~~	~~Components shall be protected from impact/drop to ensure the critical design attribute of physical arrangement is not adversely impacted.~~
			~~External Events (Construction on Site)~~	~~Components shall be protected from construction on-Site to ensure the critical design attribute of physical arrangement is not adversely impacted.~~
			~~External Events (Failure of Above-Ground Liquid Storage Tanks)~~	~~Components shall be protected from external flooding (Failure of Above-Ground Liquid Storage Tanks) to ensure the critical design attribute of physical arrangement is not adversely impacted.~~

~~Table 3.7-7 Product System~~

~~Criticality Assessment of Passive Safe By Design Components~~				
~~Component Description (A)~~	~~Sequence ID (B)~~	~~Critical Design Attribute (C)~~	~~Review of Up-Set Conditions to Change Geometry (Applicable HAZOP Guidewords) (D)~~	~~Notes/Comments (E)~~
			~~External Events (External Fire)~~	~~Components shall be protected from external fire events to ensure the critical design attribute of physical arrangement is not adversely impacted.~~
				~~Double Contingency Principle is satisfied as follows. The geometry is criticality safe and no single credible event or failure has been identified whereby the geometry could become unsafe. The enrichment is also controlled such that no single credible failure could result in loss of enrichment control.~~
~~Assay Sampling Evacuation Pump~~	~~LOSS OF SAFE-BY-DESIGN ATTRIBUTE~~	~~VOLUME~~ ~~24 liters~~ ~~Keff = 1.0 @ 6 wt %~~		~~Based on qualitative assessment, there is margin between the parameter values at normal operating conditions of Assay Sampling Evacuation Pump volume, amount of ^{235}U and enrichment and the conservative design/analysis values for these parameters assumed for criticality.~~
			~~More Heat~~	~~Based on qualitative assessment, it is highly unlikely for a process deviation to result in a more heat condition that would cause an approach to the critical safe volume and to adversely affect the maintenance of margin to criticality associated with design and maximum operating parameter values for amount of ^{235}U and enrichment.~~
			~~More Pressure~~	~~Based on qualitative assessment, it is highly unlikely for a process deviation to result in a more pressure condition that would cause an approach to the critical safe volume and to adversely affect the maintenance of margin to criticality associated with design and maximum operating parameter values for amount of ^{235}U and enrichment.~~
			~~Corrosion/ Erosion~~	~~Based on qualitative assessment, it is highly unlikely for a process deviation to result in a corrosion/erosion condition that would cause an approach to the critical safe volume. Materials are corrosion/erosion resistant and postulated complete wall erosion would not exceed the critical safe volume.~~
			~~Loss of Confinement or Leakage~~	~~Based on qualitative assessment, postulated loss of Assay Sampling Evacuation Pump confinement or leakage will not result in any appreciable accumulation of ^{235}U material because of physical limitations of the process (sub-atmospheric). As a result, loss of confinement does not result in a potential for criticality and therefore its consequence is low.~~
			~~Fire~~	~~Components shall be protected from fire to ensure the critical design attribute of volume is not adversely impacted.~~
			~~Maintenance~~	~~Configuration Management shall ensure that maintenance does not adversely impact the critical design attribute of volume.~~
				~~Double Contingency Principle is satisfied as follows. The geometry is criticality safe and no single credible event or failure has been identified whereby the geometry could become unsafe. The enrichment is also controlled such that no single credible failure could result in loss of enrichment control.~~

~~Table 3.7-7 Product System~~

~~Criticality Assessment of Passive Safe-By-Design Components~~				
~~Component Description (A)~~	~~Sequence ID (B)~~	~~Critical Design Attribute (C)~~	~~Review of Up-Set Conditions to Change Geometry (Applicable HAZOP Guidewords) (D)~~	~~Notes/Comments (E)~~
~~Assay Sampling Rig~~	~~LOSS OF SAFE-BY-DESIGN ATTRIBUTE~~	~~PHYSICAL ARRANGEMENT~~		~~Based on qualitative assessment, there is margin between the normal operating conditions and the conservative design/analysis conditions assumed for criticality.~~
			~~More Heat~~	~~Based on qualitative assessment, it is highly unlikely for a process deviation to result in a more heat condition that would adversely affect the maintenance of margin to criticality associated with design and maximum operating parameter values for amount of ^{235}U and enrichment.~~
			~~More Pressure~~	~~Based on qualitative assessment, it is highly unlikely for a process deviation to result in a more pressure condition that would adversely affect the maintenance of margin to criticality associated with design and maximum operating parameter values for amount of ^{235}U and enrichment.~~
			~~Corrosion/ Erosion~~	~~Based on qualitative assessment, it is highly unlikely for a process deviation to result in a corrosion/erosion condition that would affect the maintenance of margin to criticality associated with design and maximum operating parameter values for physical arrangement.~~
			~~Loss of Confinement or Leakage~~	~~Based on qualitative assessment, postulated loss of Assay Sampling Rig confinement or leakage will not result in any appreciable accumulation of ^{235}U material because of physical limitations of the process (sub-atmospheric). As a result, loss of confinement does not result in a potential for criticality and therefore its consequence is low.~~
			~~Fire~~	~~Components shall be protected from fire to ensure the critical design attribute of physical arrangement is not adversely impacted.~~
			~~Maintenance~~	~~Configuration Management shall ensure that maintenance does not adversely impact the critical design attribute of physical arrangement.~~
			~~Impact/Drop~~	~~Components shall be protected from impact/drop to ensure the critical design attribute of physical arrangement is not adversely impacted.~~
			~~External Events (Construction on Site)~~	~~Components shall be protected from construction on Site to ensure the critical design attribute of physical arrangement is not adversely impacted.~~
			~~External Events (Failure of Above Ground Liquid Storage Tanks)~~	~~Components shall be protected from external flooding (Failure of Above-Ground Liquid Storage Tanks) to ensure the critical design attribute of physical arrangement is not adversely impacted.~~
			~~External Events (External Fire)~~	~~Components shall be protected from external fire events to ensure the critical design attribute of physical arrangement is not adversely impacted.~~
				~~Double Contingency Principle is satisfied as follows. The geometry is criticality safe and no single credible event or failure has been identified whereby the geometry could become unsafe. The enrichment is also controlled such that no single credible failure could result in loss of enrichment control.~~

~~Table 3.7-7 Product System~~

~~Criticality Assessment of Passive Safe-By-Design Components~~				
~~Component Description (A)~~	~~Sequence ID (B)~~	~~Critical Design Attribute (C)~~	~~Review of Up-Set Conditions to Change Geometry (Applicable HAZOP Guidewords) (D)~~	~~Notes/Comments (E)~~
~~Mixed-bed Trap (Assay Sampling Rig) (50% Al_2O_3 and 50% activated carbon)~~	~~LOSS OF SAFE-BY-DESIGN ATTRIBUTE~~	~~DIAMETER 24.4 cm (ID) Keff = 1.0 @ 6 wt %~~		~~Based on qualitative assessment, there is margin between the parameter values at normal operating conditions of Carbon Trap diameter, amount of ^{235}U and enrichment and the conservative design/analysis values for these parameters assumed for criticality.~~
			~~More Heat~~	~~Based on qualitative assessment, it is highly unlikely for a process deviation to result in a more heat condition that would cause an approach to the critical safe diameter and to adversely affect the maintenance of margin to criticality associated with design and maximum operating parameter values for amount of ^{235}U and enrichment.~~
			~~More Pressure~~	~~Based on qualitative assessment, it is highly unlikely for a process deviation to result in a more pressure condition that would cause an approach to the critical safe diameter and to adversely affect the maintenance of margin to criticality associated with design and maximum operating parameter values for amount of ^{235}U and enrichment.~~
			~~Corrosion/ Erosion~~	~~Based on qualitative assessment, it is highly unlikely for a process deviation to result in a corrosion/erosion condition that would cause an approach to the critical safe diameter. Materials are corrosion/erosion resistant and postulated complete wall erosion would not exceed the critical safe diameter.~~
			~~Loss of Confinement or Leakage~~	~~Based on qualitative assessment, postulated loss of Carbon Trap confinement or leakage will not result in any appreciable accumulation of ^{235}U material because of physical limitations of the process (sub-atmospheric). As a result, loss of confinement does not result in a potential for criticality and therefore its consequence is low.~~
			~~Fire~~	~~Components shall be protected from fire to ensure the critical design attribute of diameter is not adversely impacted.~~
			~~Maintenance~~	~~Configuration Management shall ensure that maintenance does not adversely impact the critical design attribute of diameter.~~
				~~Double Contingency Principle is satisfied as follows. The geometry is criticality safe and no single credible event or failure has been identified whereby the geometry could become unsafe. The enrichment is also controlled such that no single credible failure could result in loss of enrichment control.~~
~~Chemical Absorber Oil Trap (Assay Sampling Rig)~~	~~LOSS OF SAFE-BY-DESIGN ATTRIBUTE~~	~~VOLUME 24 liters Keff = 1.0 @ 6 wt %~~		~~Based on qualitative assessment, there is margin between the parameter values at normal operating conditions of Chemical Absorber Oil Trap volume, amount of ^{235}U and enrichment and the conservative design/analysis values for these parameters assumed for criticality.~~
			~~More Heat~~	~~Based on qualitative assessment, it is highly unlikely for a process deviation to result in a more heat condition that would cause an approach to the critical safe volume and to adversely affect the maintenance of margin to criticality associated with design and maximum operating parameter values for amount of ^{235}U and enrichment.~~

~~Table 3.7-7 Product System~~

~~Criticality Assessment of Passive Safe-By-Design Components~~				
~~Component Description (A)~~	~~Sequence ID (B)~~	~~Critical Design Attribute (C)~~	~~Review of Up-Set Conditions to Change Geometry (Applicable HAZOP Guidewords) (D)~~	~~Notes/Comments (E)~~
			~~More Pressure~~	~~Based on qualitative assessment, it is highly unlikely for a process deviation to result in a more pressure condition that would cause an approach to the critical safe volume and to adversely affect the maintenance of margin to criticality associated with design and maximum operating parameter values for amount of ^{235}U and enrichment.~~
			~~Corrosion/ Erosion~~	~~Based on qualitative assessment, it is highly unlikely for a process deviation to result in a corrosion/erosion condition that would cause an approach to the critical safe volume. Materials are corrosion/erosion resistant and postulated complete wall erosion would not exceed the critical safe volume.~~
			~~Loss of Confinement or Leakage~~	~~Based on qualitative assessment, postulated loss of Chemical Absorber Oil Trap confinement or leakage will not result in any appreciable accumulation of ^{235}U material because of physical limitations of the process (sub-atmospheric). As a result, loss of confinement does not result in a potential for criticality and therefore its consequence is low.~~
			~~Fire~~	~~Components shall be protected from fire to ensure the critical design attribute of volume is not adversely impacted.~~
			~~Maintenance~~	~~Configuration Management shall ensure that maintenance does not adversely impact the critical design attribute of volume.~~
				~~Double Contingency Principle is satisfied as follows. The geometry is criticality safe and no single credible event or failure has been identified whereby the geometry could become unsafe. The enrichment is also controlled such that no single credible failure could result in loss of enrichment control.~~
~~Oil Trap (Assay Sampling Rig)~~	~~LOSS OF SAFE-BY-DESIGN ATTRIBUTE~~	~~DIAMETER 24.4 cm (ID) Keff = 1.0 @ 6 wt %~~		~~Based on qualitative assessment, there is margin between the parameter values at normal operating conditions of Oil Trap diameter, amount of ^{235}U and enrichment and the conservative design/analysis values for these parameters assumed for criticality.~~
			~~More Heat~~	~~Based on qualitative assessment, it is highly unlikely for a process deviation to result in a more heat condition that would cause an approach to the critical safe diameter and to adversely affect the maintenance of margin to criticality associated with design and maximum operating parameter values for amount of ^{235}U and enrichment.~~
			~~More Pressure~~	~~Based on qualitative assessment, it is highly unlikely for a process deviation to result in a more pressure condition that would cause an approach to the critical safe diameter and to adversely affect the maintenance of margin to criticality associated with design and maximum operating parameter values for amount of ^{235}U and enrichment.~~
			~~Corrosion/ Erosion~~	~~Based on qualitative assessment, it is highly unlikely for a process deviation to result in a corrosion/erosion condition that would cause an approach to the critical safe diameter. Materials are corrosion/erosion resistant and postulated complete wall erosion would not exceed the critical safe diameter.~~

~~Table 3.7-7 Product System~~

~~Criticality Assessment of Passive Safe By Design Components~~				
~~Component Description (A)~~	~~Sequence ID (B)~~	~~Critical Design Attribute (C)~~	~~Review of Up-Set Conditions to Change Geometry (Applicable HAZOP Guidewords) (D)~~	~~Notes/Comments (E)~~
			~~Loss of Confinement or Leakage~~	~~Based on qualitative assessment, postulated loss of Oil Catch Pot confinement or leakage will not result in any appreciable accumulation of ^{235}U material because of physical limitations of the process (sub-atmospheric). As a result, loss of confinement does not result in a potential for criticality and therefore its consequence is low.~~
			~~Fire~~	~~Components shall be protected from fire to ensure the critical design attribute of diameter is not adversely impacted.~~
			~~Maintenance~~	~~Configuration Management shall ensure that maintenance does not adversely impact the critical design attribute of diameter.~~
				~~Double Contingency Principle is satisfied as follows: The geometry is criticality safe and no single credible event or failure has been identified whereby the geometry could become unsafe. The enrichment is also controlled such that no single credible failure could result in loss of enrichment control.~~
~~Assay Sampling Piping (largest pipe ID in system)~~	~~LOSS OF SAFE BY DESIGN ATTRIBUTE~~	~~DIAMETER~~ ~~24.4 cm (ID)~~ ~~Keff = 1.0 @ 6 wt %~~		~~Based on qualitative assessment, there is margin between the parameter values at normal operating conditions of pipe diameter, amount of ^{235}U and enrichment and the conservative design/analysis values for these parameters assumed for criticality.~~
			~~More Heat~~	~~Based on qualitative assessment, it is highly unlikely for a process deviation to result in a more heat condition that would cause an approach to the critical safe diameter and to adversely affect the maintenance of margin to criticality associated with design and maximum operating parameter values for amount of ^{235}U and enrichment.~~
			~~More Pressure~~	~~Based on qualitative assessment, it is highly unlikely for a process deviation to result in a more pressure condition that would cause an approach to the critical safe diameter and to adversely affect the maintenance of margin to criticality associated with design and maximum operating parameter values for amount of ^{235}U and enrichment.~~
			~~Corrosion/ Erosion~~	~~Based on qualitative assessment, it is highly unlikely for a process deviation to result in a corrosion/erosion condition that would cause an approach to the critical safe diameter. Materials are corrosion/erosion resistant and postulated complete wall erosion would not exceed the critical safe diameter.~~
			~~Loss of Confinement or Leakage~~	~~Based on qualitative assessment, postulated loss of piping system confinement or leakage will not result in any appreciable accumulation of ^{235}U material because of physical limitations of the process (sub-atmospheric). As a result, loss of confinement does not result in a potential for criticality and therefore its consequence is low.~~
			~~Fire~~	~~Components shall be protected from fire to ensure the critical design attribute of diameter is not adversely impacted.~~
			~~Maintenance~~	~~Configuration Management shall ensure that maintenance does not adversely impact the critical design attribute of diameter.~~

~~Table 3.7-7 Product System~~

~~Criticality Assessment of Passive Safe-By-Design Components~~				
~~Component Description (A)~~	~~Sequence ID (B)~~	~~Critical Design Attribute (C)~~	~~Review of Up-Set Conditions to Change Geometry (Applicable HAZOP Guidewords) (D)~~	~~Notes/Comments (E)~~
				~~Double Contingency Principle is satisfied as follows. The geometry is criticality safe and no single credible event or failure has been identified whereby the geometry could become unsafe. The enrichment is also controlled such that no single credible failure could result in loss of enrichment control.~~
~~Assay Sampling Piping Arrangement~~	~~LOSS OF SAFE-BY-DESIGN ATTRIBUTE~~	~~PHYSICAL ARRANGEMENT~~		~~Based on qualitative assessment, there is margin between the normal operating conditions and the conservative design/analysis conditions assumed for criticality.~~
			~~More Heat~~	~~Based on qualitative assessment, it is highly unlikely for a process deviation to result in a more heat condition that would adversely affect the maintenance of margin to criticality associated with design and maximum operating parameter values for amount of ^{235}U and enrichment.~~
			~~More Pressure~~	~~Based on qualitative assessment, it is highly unlikely for a process deviation to result in a more pressure condition that would adversely affect the maintenance of margin to criticality associated with design and maximum operating parameter values for amount of ^{235}U and enrichment.~~
			~~Corrosion/ Erosion~~	~~Based on qualitative assessment, it is highly unlikely for a process deviation to result in a corrosion/erosion condition that would affect the maintenance of margin to criticality associated with design and maximum operating parameter values for physical arrangement.~~
			~~Loss of Confinement or Leakage~~	~~Based on qualitative assessment, postulated loss of piping system confinement or leakage will not result in any appreciable accumulation of ^{235}U material because of physical limitations of the process (sub-atmospheric). As a result, loss of confinement does not result in a potential for criticality and therefore its consequence is low.~~
			~~Fire~~	~~Components shall be protected from fire to ensure the critical design attribute of physical arrangement is not adversely impacted.~~
			~~Maintenance~~	~~Configuration Management shall ensure that maintenance does not adversely impact the critical design attribute of physical arrangement.~~
			~~Impact/Drop~~	~~Components shall be protected from impact/drop to ensure the critical design attribute of physical arrangement is not adversely impacted.~~
			~~External Events (Construction on Site)~~	~~Components shall be protected from construction on Site to ensure the critical design attribute of physical arrangement is not adversely impacted.~~
			~~External Events (Failure of Above-Ground Liquid Storage Tanks)~~	~~Components shall be protected from external flooding (Failure of Above-Ground Liquid Storage Tanks) to ensure the critical design attribute of physical arrangement is not adversely impacted.~~
			~~External Events (Local Intense Precipitation)~~	~~Components shall be protected from local intense precipitation events to ensure the critical design attribute of physical arrangement is not adversely impacted.~~

~~Table 3.7-7 Product System~~

~~Criticality Assessment of Passive Safe-By-Design Components~~				
~~Component Description (A)~~	~~Sequence ID (B)~~	~~Critical Design Attribute (C)~~	~~Review of Up-Set Conditions to Change Geometry (Applicable HAZOP Guidewords) (D)~~	~~Notes/Comments (E)~~
			~~External Events (External Fire)~~	~~Components shall be protected from external fire events to ensure the critical design attribute of physical arrangement is not adversely impacted.~~
				~~Double Contingency Principle is satisfied as follows. The geometry is criticality safe and no single credible event or failure has been identified whereby the geometry could become unsafe. The enrichment is also controlled such that no single credible failure could result in loss of enrichment control.~~
~~GEVS for Assay Sampling~~	~~LOSS OF SAFE-BY-DESIGN ATTRIBUTE~~	~~TBD~~	~~TBD~~	~~The Assay Sampling Rig is required to exhaust to a safe by design gaseous effluent ventilation system. Design parameters will be completed during the final design of the gaseous effluent ventilation system.~~
~~Mobile UF_6 Rig~~	~~LOSS OF SAFE-BY-DESIGN ATTRIBUTE~~	~~PHYSICAL ARRANGEMENT~~		~~Based on qualitative assessment, there is margin between the normal operating conditions and the conservative design/analysis conditions assumed for criticality.~~
			~~More Heat~~	~~Based on qualitative assessment, it is highly unlikely for a process deviation to result in a more heat condition that would adversely affect the maintenance of margin to criticality associated with design and maximum operating parameter values for amount of ^{235}U and enrichment.~~
			~~More Pressure~~	~~Based on qualitative assessment, it is highly unlikely for a process deviation to result in a more pressure condition that would adversely affect the maintenance of margin to criticality associated with design and maximum operating parameter values for amount of ^{235}U and enrichment.~~
			~~Corrosion/ Erosion~~	~~Based on qualitative assessment, it is highly unlikely for a process deviation to result in a corrosion/erosion condition that would affect the maintenance of margin to criticality associated with design and maximum operating parameter values for physical arrangement.~~
			~~Loss of Confinement or Leakage~~	~~Based on qualitative assessment, postulated loss of Mobile UF_6 Rig confinement or leakage will not result in any appreciable accumulation of ^{235}U material because of physical limitations of the process (sub-atmospheric). As a result, loss of confinement does not result in a potential for criticality and therefore its consequence is low.~~
			~~Fire~~	~~Components shall be protected from fire to ensure the critical design attribute of physical arrangement is not adversely impacted.~~
			~~Maintenance~~	~~Configuration Management shall ensure that maintenance does not adversely impact the critical design attribute of physical arrangement.~~
			~~Impact/Drop~~	~~Components shall be protected from impact/drop to ensure the critical design attribute of physical arrangement is not adversely impacted.~~
			~~External Events (Construction on Site)~~	~~Components shall be protected from construction on Site to ensure the critical design attribute of physical arrangement is not adversely impacted.~~

~~Table 3.7-7 Product System~~

~~Criticality Assessment of Passive Safe-By-Design Components~~				
~~Component Description (A)~~	~~Sequence ID (B)~~	~~Critical Design Attribute (C)~~	~~Review of Up-Set Conditions to Change Geometry (Applicable HAZOP Guidewords) (D)~~	~~Notes/Comments (E)~~
			~~External Events (Failure of Above-Ground Liquid Storage Tanks)~~	~~Components shall be protected from external flooding (Failure of Above-Ground Liquid Storage Tanks) to ensure the critical design attribute of physical arrangement is not adversely impacted.~~
			~~External Events (External Fire)~~	~~Components shall be protected from external fire events to ensure the critical design attribute of physical arrangement is not adversely impacted.~~
				~~Double Contingency Principle is satisfied as follows. The geometry is criticality safe and no single credible event or failure has been identified whereby the geometry could become unsafe. The enrichment is also controlled such that no single credible failure could result in loss of enrichment control.~~
~~**Finger Sample Bottle**~~	~~LOSS OF SAFE-BY-DESIGN ATTRIBUTE~~	~~**DIAMETER** 24.4 cm (ID) Keff = 1.0 @ 6 wt %~~		~~Based on qualitative assessment, there is margin between the parameter values at normal operating conditions of Finger Sample Bottle diameter, amount of ^{235}U and enrichment and the conservative design/analysis values for these parameters assumed for criticality.~~
			~~More Heat~~	~~Based on qualitative assessment, it is highly unlikely for a process deviation to result in a more heat condition that would cause an approach to the critical safe diameter and to adversely affect the maintenance of margin to criticality associated with design and maximum operating parameter values for amount of ^{235}U and enrichment.~~
			~~More Pressure~~	~~Based on qualitative assessment, it is highly unlikely for a process deviation to result in a more pressure condition that would cause an approach to the critical safe diameter and to adversely affect the maintenance of margin to criticality associated with design and maximum operating parameter values for amount of ^{235}U and enrichment.~~
			~~Corrosion/ Erosion~~	~~Based on qualitative assessment, it is highly unlikely for a process deviation to result in a corrosion/erosion condition that would cause an approach to the critical safe diameter. Materials are corrosion/erosion resistant and postulated complete wall erosion would not exceed the critical safe diameter.~~
			~~Loss of Confinement or Leakage~~	~~Based on qualitative assessment, postulated loss of Finger Sample Bottle confinement or leakage will not result in any appreciable accumulation of ^{235}U material because of physical limitations of the process (sub-atmospheric). As a result, loss of confinement does not result in a potential for criticality and therefore its consequence is low.~~
			~~Fire~~	~~Components shall be protected from fire to ensure the critical design attribute of diameter is not adversely impacted.~~
			~~Maintenance~~	~~Configuration Management shall ensure that maintenance does not adversely impact the critical design attribute of diameter.~~

~~Table 3.7-7 Product System~~

~~Criticality Assessment of Passive Safe By Design Components~~				
~~Component Description (A)~~	~~Sequence ID (B)~~	~~Critical Design Attribute (C)~~	~~Review of Up-Set Conditions to Change Geometry (Applicable HAZOP Guidewords) (D)~~	~~Notes/Comments (E)~~
				~~Double Contingency Principle is satisfied as follows. The geometry is criticality safe and no single credible event or failure has been identified whereby the geometry could become unsafe. The enrichment is also controlled such that no single credible failure could result in loss of enrichment control.~~

~~**Column Descriptions:**~~

~~Column A: This column provides a brief description of each component.~~

~~Column B: This column identifies the accident sequence associated with the passive component.~~

~~Column C: This column identifies the critical design attribute under consideration along with the conservative values used in the criticality analysis.~~

~~Column D: This column identifies the applicable guidewords from the ISA HAZOP procedure that are used to assess the criticality design margin. Additional guidewords are addressed as applicable in the detailed assessment.~~

~~Column E: This column provides any notes, comments and concluding statements.~~

Table 3.7-7 Product System

Criticality Assessment of Passive Safe-By-Design Components - ETC4009614				
Component Description (A)	Sequence ID (B)	Safe Design Attribute $k_{eff} < 0.95$ @ 6 wt % (Design Value, See Note) (C)	Review of Upset Conditions to Change Geometry (Applicable HAZOP Guidewords) (D)	Notes/Comments (E)
Product Piping (largest piping diameter in the system)	LOSS OF SAFE BY DESIGN ATTRIBUTE	DIAMETER 22.4 cm		Based on qualitative assessment, there is margin between the parameter values at normal operating conditions of pipe diameter, amount of U^{235} and enrichment and the conservative design/analysis values for these parameters assumed for criticality.
Product Piping Arrangement	LOSS OF SAFE BY DESIGN ATTRIBUTE	PHYSICAL ARRNGMT		Based on qualitative assessment, there is margin between the normal operating conditions and the conservative design/analysis conditions assumed for criticality.
WS1001 & WS251 Product Roots Pumps	LOSS OF SAFE BY DESIGN ATTRIBUTE	VOLUME 19.3 liters		Based on qualitative assessment, there is margin between the parameter values at normal operating conditions of Roots Pump volume, amount of U^{235} and enrichment and the conservative design/analysis values for these parameters assumed for criticality.
WS1001 & WS251 Product Roots Pump Set	LOSS OF SAFE BY DESIGN ATTRIBUTE	PHYSICAL ARRNGMNT See Crit. Calc		Based on qualitative assessment, there is margin between the normal operating conditions and the conservative design/analysis conditions assumed for criticality.

LBDCR-10-0012

Table 3.7-7 Product System

Criticality Assessment of Passive Safe-By-Design Components - ETC4009614				
Component Description (A)	Sequence ID (B)	Safe Design Attribute $k_{eff} < 0.95$ @ 6 wt % (Design Value, See Note) (C)	Review of Upset Conditions to Change Geometry (Applicable HAZOP Guidewords) (D)	Notes/Comments (E)
Product Cold Trap	LOSS OF SAFE BY DESIGN ATTRIBUTE	DIAMETER 22.4 cm		Based on qualitative assessment, there is margin between the parameter values at normal operating conditions of Cold Trap diameter, amount of U^{235} and enrichment and the conservative design/analysis values for these parameters assumed for criticality.
Product Cold Traps	LOSS OF SAFE BY DESIGN ATTRIBUTE	PHYSICAL ARRNGMNT See Crit. Calc		Based on qualitative assessment, there is margin between the normal operating conditions and the conservative design/analysis conditions assumed for criticality.
Carbon Type-A Trap (Product Vent Pump & Trap Set)	LOSS OF SAFE BY DESIGN ATTRIBUTE	DIAMETER 22.4 cm		Based on qualitative assessment, there is margin between the parameter values at normal operating conditions of Carbon Trap diameter, amount of U^{235} and enrichment and the conservative design/analysis values for these parameters assumed for criticality.
Al_2O_3 Type-A Trap (Product Vent Pump & Trap Set)	LOSS OF SAFE BY DESIGN ATTRIBUTE	DIAMETER 22.4 cm		Based on qualitative assessment, there is margin between the parameter values at normal operating conditions of Aluminum Oxide Trap diameter, amount of U^{235} and enrichment and the conservative design/analysis values for these parameters assumed for criticality.
Al_2O_3 Adsorption Oil Filter (Product Vent Pump & Trap Set)	LOSS OF SAFE BY DESIGN ATTRIBUTE	VOLUME 19.3 liters		Based on qualitative assessment, there is margin between the parameter values at normal operating conditions of Al_2O_3 Oil Filter volume, amount of U^{235} and enrichment and the conservative design/analysis values for these parameters assumed for criticality.

LBDCR-10-0012

Table 3.7-7 Product System

Criticality Assessment of Passive Safe-By-Design Components - ETC4009614				
Component Description (A)	Sequence ID (B)	Safe Design Attribute $k_{eff} < 0.95$ @ 6 wt % (Design Value, See Note) (C)	Review of Upset Conditions to Change Geometry (Applicable HAZOP Guidewords) (D)	Notes/Comments (E)
ARS40-65 Exhaust Oil Filter (Product Vent Pump & Trap Set)	LOSS OF SAFE BY DESIGN ATTRIBUTE	VOLUME 19.3 liters		Based on qualitative assessment, there is margin between the parameter values at normal operating conditions of Exhaust Oil Filter volume, amount of U^{235} and enrichment and the conservative design/analysis values for these parameters assumed for criticality.
D40-BCS Rotary Vane Pump (Product Vent Pump and Trap Set)	LOSS OF SAFE BY DESIGN ATTRIBUTE	VOLUME 19.3 liters		Based on qualitative assessment, there is margin between the parameter values at normal operating conditions of Rotary Vane Pump volume, amount of U^{235} and enrichment and the conservative design/analysis values for these parameters assumed for criticality.
Product Vent Pump and Trap Set	LOSS OF SAFE BY DESIGN ATTRIBUTE	PHYSICAL ARRNGMNT See Crit. Calc		Based on qualitative assessment, there is margin between the normal operating conditions and the conservative design/analysis conditions assumed for criticality.
Assay Sampling Piping (largest pipe in system)	LOSS OF SAFE BY DESIGN ATTRIBUTE	DIAMETER 22.4 cm		Based on qualitative assessment, there is margin between the parameter values at normal operating conditions of pipe diameter, amount of U^{235} and enrichment and the conservative design/analysis values for these parameters assumed for criticality.

LBDCR-10-0012

Table 3.7-7 Product System

Criticality Assessment of Passive Safe-By-Design Components - ETC4009614				
Component Description (A)	Sequence ID (B)	Safe Design Attribute $k_{eff} < 0.95$ @ 6 wt % (Design Value, See Note) (C)	Review of Upset Conditions to Change Geometry (Applicable HAZOP Guidewords) (D)	Notes/Comments (E)
Assay Sampling Piping Arrangement	LOSS OF SAFE BY DESIGN ATTRIBUTE	PHYSICAL ARRNGMT Bounded by Product Piping Arrangement		Based on qualitative assessment, there is margin between the normal operating conditions and the conservative design/analysis conditions assumed for criticality.
Mixed Bed (Al_2O_3 & C) Type-A Trap (Assay Sampling Rig)	LOSS OF SAFE BY DESIGN ATTRIBUTE	DIAMETER 22.4 cm		Based on qualitative assessment, there is margin between the parameter values at normal operating conditions of Mixed Bed Trap diameter, amount of U^{235} and enrichment and the conservative design/analysis values for these parameters assumed for criticality.
Al_2O_3 Adsorption Oil Filter (Assay Sampling Rig)	LOSS OF SAFE BY DESIGN ATTRIBUTE	VOLUME 19.3 liters		Based on qualitative assessment, there is margin between the parameter values at normal operating conditions of Al_2O_3 Oil Filter volume, amount of U^{235} and enrichment and the conservative design/analysis values for these parameters assumed for criticality.
ARS40-65 Exhaust Oil Filter (Assay Sampling Rig)	LOSS OF SAFE BY DESIGN ATTRIBUTE	VOLUME 19.3 liters		Based on qualitative assessment, there is margin between the parameter values at normal operating conditions of Exhaust Oil Filter volume, amount of U^{235} and enrichment and the conservative design/analysis values for these parameters assumed for criticality.

LBDCR-10-0012

Table 3.7-7 Product System

Criticality Assessment of Passive Safe-By-Design Components - ETC4009614				
Component Description (A)	Sequence ID (B)	Safe Design Attribute $k_{eff} < 0.95$ @ 6 wt % (Design Value, See Note) (C)	Review of Upset Conditions to Change Geometry (Applicable HAZOP Guidewords) (D)	Notes/Comments (E)
D40-BCS Rotary Vane Pump (Assay Sampling Rig)	LOSS OF SAFE BY DESIGN ATTRIBUTE	VOLUME 19.3 liters		Based on qualitative assessment, there is margin between the parameter values at normal operating conditions of Rotary Vane Pump volume, amount of ^{235}U and enrichment and the conservative design/analysis values for these parameters assumed for criticality.
Assay Sampling Rig	LOSS OF SAFE BY DESIGN ATTRIBUTE	PHYSICAL ARRNGMNT Bounded by Product Pump & Trap Set		Based on qualitative assessment, there is margin between the normal operating conditions and the conservative design/analysis conditions assumed for criticality.
Cold Trap (K300) (Mobile Maint'nce Rig)	LOSS OF SAFE BY DESIGN ATTRIBUTE	DIAMETER 22.4 cm		Based on qualitative assessment, there is margin between the parameter values at normal operating conditions of component diameter, amount of U^{235} and enrichment and the conservative design/analysis values for these parameters assumed for criticality.
Mixed Bed (Al_2O_3 & C) Type-A Trap (Mobile Maint'nce Rig)	LOSS OF SAFE BY DESIGN ATTRIBUTE	DIAMETER 22.4 cm		Based on qualitative assessment, there is margin between the parameter values at normal operating conditions of Mixed Bed Trap diameter, amount of U^{235} and enrichment and the conservative design/analysis values for these parameters assumed for criticality.

LBDCR-10-0012

Table 3.7-7 Product System

Criticality Assessment of Passive Safe-By-Design Components - ETC4009614				
Component Description (A)	Sequence ID (B)	Safe Design Attribute $k_{eff} < 0.95$ @ 6 wt % (Design Value, See Note) (C)	Review of Upset Conditions to Change Geometry (Applicable HAZOP Guidewords) (D)	Notes/Comments (E)
Al_2O_3 Adsorption Oil Filter (Mobile Maint'nce Rig)	LOSS OF SAFE BY DESIGN ATTRIBUTE	VOLUME 19.3 liters		Based on qualitative assessment, there is margin between the parameter values at normal operating conditions of Al_2O_3 Oil Filter volume, amount of U^{235} and enrichment and the conservative design/analysis values for these parameters assumed for criticality.
ARS40-65 Exhaust Oil Filter (Mobile Maint'nce Rig)	LOSS OF SAFE BY DESIGN ATTRIBUTE	VOLUME 19.3 liters		Based on qualitative assessment, there is margin between the parameter values at normal operating conditions of Exhaust Oil Filter volume, amount of U^{235} and enrichment and the conservative design/analysis values for these parameters assumed for criticality.
D40-BCS Rotary Vane Pump (Mobile Maint'nce Rig)	LOSS OF SAFE BY DESIGN ATTRIBUTE	VOLUME 19.3 liters		Based on qualitative assessment, there is margin between the parameter values at normal operating conditions of Rotary Vane Pump volume, amount of U^{235} and enrichment and the conservative design/analysis values for these parameters assumed for criticality.
WSU251 Roots Pump (Mobile Maint'nce Rig)	LOSS OF SAFE BY DESIGN ATTRIBUTE	VOLUME 19.3 liters		Based on qualitative assessment, there is margin between the normal operating conditions and the conservative design/analysis conditions assumed for criticality.
Mobile Maint'nce Rig	LOSS OF SAFE BY DESIGN ATTRIBUTE	PHYSICAL ARRNGMNT See Crit. Calc		Based on qualitative assessment, there is margin between the normal operating conditions and the conservative design/analysis conditions assumed for criticality.

LBDCR-10-0012

Table 3.7-7 Product System

Criticality Assessment of Passive Safe-By-Design Components -ETC4009614				
Component Description (A)	Sequence ID (B)	Safe Design Attribute $k_{eff} < 0.95$ @ 6 wt % (Design Value, See Note) (C)	Review of Upset Conditions to Change Geometry (Applicable HAZOP Guidewords) (D)	Notes/Comments (E)
Pipette	LOSS OF SAFE BY DESIGN ATTRIBUTE	DIAMETER 22.4 cm		Based on qualitative assessment, there is margin between the parameter values at normal operating conditions of Pipette diameter, amount of U^{235} and enrichment and the conservative design/analysis values for these parameters assumed for criticality.
			Upset Conditions	
All			More Heat	Based on qualitative assessment, it is highly unlikely for a process deviation to result in a more heat condition that would adversely affect the maintenance of margin to criticality associated with design and maximum operating parameter values for amount of U^{235} and enrichment.
All			More Pressure	Based on qualitative assessment, it is highly unlikely for a process deviation to result in a more pressure condition that would adversely affect the maintenance of margin to criticality associated with design and maximum operating parameter values for amount of U^{235} and enrichment.
All			Corrosion/Erosion	Based on qualitative assessment, it is highly unlikely for a process deviation to result in a corrosion/erosion condition that would affect the maintenance of margin to criticality associated with design and maximum operating parameter values for physical arrangement.
All			Loss of Confinement or Leakage	Based on qualitative assessment, postulated loss of confinement or leakage will not result in any appreciable accumulation of U^{235} material because of physical limitations of the process (sub-atmospheric). As a result, loss of confinement does not result in a potential for criticality and therefore its consequence is low.
All			Fire	Components are protected from fire to ensure the safe design attribute of physical arrangement is not adversely impacted. The application of IROFS36a and its implementing procedure provides control of transient combustibles, limiting the fire magnitude and location in areas containing uranic material.

LBDCR-10-0012

Table 3.7-7 Product System

Criticality Assessment of Passive Safe-By-Design Components - ETC4009614				
Component Description (A)	Sequence ID (B)	Safe Design Attribute $k_{eff} < 0.95$ @ 6 wt % (Design Value, See Note) (C)	Review of Upset Conditions to Change Geometry (Applicable HAZOP Guidewords) (D)	Notes/Comments (E)
All			Maintenance	Approved maintenance procedures will be used to ensure that maintenance does not adversely impact the safe design attribute of physical arrangement. Maintenance is part of the generic management measures as described in Section 3.1.8.3 of the ISA Summary.
SBD Components by Physical Arrangement			Impact/Drop	Components are protected from impact/drop where necessary to ensure the safe design attribute of physical arrangement is not adversely impacted. Seismic II/I design criteria apply to support and anchorages of SBD components whose as-designed, safe configuration must be maintained during a design basis earthquake (DBE). Meeting these criteria provides protection from impact/drop due to a bounding event (i.e., DBE).
SBD Components by Physical Arrangement			External Events (Construction on Site)	Bounded by the seismic, tornado missile or impact/drop event in accordance with the ISA Meeting Minutes on Operate While Constructing.
SBD Components by Physical Arrangement			External Events (Failure of Above-Ground Liquid Storage Tanks)	Criticality due to this event is not credible, as it is bounded by local intense precipitation and protection from floods is no longer required as a result of LAR-08-07.
SBD Components by Physical Arrangement			External Events (Hurricane)	Not a design basis event for the NEF site due to its distance from the coast (ISA Summary, Section 3.2.3.4.3)
SBD Components by Physical Arrangement			External Events (Seismic)	Components are protected from seismic events where necessary to ensure the safe design attribute of physical arrangement is not adversely impacted. Unless specifically exempted by a nuclear criticality safety evaluation or analysis, SBD components and piping require seismic design to ensure that minimum spacing requirements are maintained in the event of a DBE or damage from a nearby II/I structure, system or component .

LBDCR-10-0012

Table 3.7-7 Product System

Criticality Assessment of Passive Safe-By-Design Components - ETC4009614				
Component Description (A)	Sequence ID (B)	Safe Design Attribute $k_{eff} < 0.95$ @ 6 wt % (Design Value, See Note) (C)	Review of Upset Conditions to Change Geometry (Applicable HAZOP Guidewords) (D)	Notes/Comments (E)
SBD Components by Physical Arrangement			External Events (Tornado)	Components are protected from tornado events with the application of IROFS27e to prevent building collapse to ensure the safe design attribute of physical arrangement is not adversely impacted.
SBD Components by Physical Arrangement			External Events (Tornado Missile)	Components are protected from tornado missile events where necessary to ensure the safe design attribute of physical arrangement is not adversely impacted. Unless specifically exempted by a nuclear criticality safety evaluation or analysis, SBD components and piping require tornado missile protection to ensure that minimum spacing requirements are maintained during a tornado event.
SBD Components by Physical Arrangement			External Events (Local Intense Precipitation)	Criticality due to this event is not credible as a result of LAR-08-07. Components are protected from local intense precipitation with the application of IROFS27e to prevent building collapse to ensure the safe design attribute of physical arrangement is not adversely impacted. IROFS27e does not prevent water intrusion. Flooding is included in nuclear criticality safety evaluations and analyses for SBD components and piping located on the first floor to demonstrate non-credibility. Items located on higher floors are not subject to flooding.
SBD Components by Physical Arrangement			External Events (External Fire)	Components are protected from external fire events with the application of IROFS35 (fire barriers) and IROFS36g (vegetation fire control) to ensure the safe design attribute of physical arrangement is not adversely impacted.
SBD Components by Physical Arrangement			External Events (Snow/Ice)	Components are protected from snow/ice events with the application of IROFS27e to prevent building collapse to ensure the safe design attribute of physical arrangement is not adversely impacted. Water intrusion due to the snow/ice events is bounded by local intense precipitation.

LBDCR-10-0012

Table 3.7-7 Product System

Criticality Assessment of Passive Safe-By-Design Components - ETC4009614				
Component Description (A)	Sequence ID (B)	Safe Design Attribute $k_{eff} < 0.95$ @ 6 wt % (Design Value, See Note) (C)	Review of Upset Conditions to Change Geometry (Applicable HAZOP Guidewords) (D)	Notes/Comments (E)
Adherence to Double Contingency Principle				
All				Double Contingency Principle is satisfied as follows: The geometry is controlled such that the components are individually SBD by physical size or jointly SBD by physical arrangement, and no single credible event or failure has been identified that has the potential to adversely impact the safety function of the passive design features. The enrichment is also controlled such that no single credible event or failure could result in loss of enrichment control leading to criticality.

Column Descriptions:

Column A: This column provides a brief description of each component.

Column B: This column identifies the accident sequence associated with the passive component.

Column C: This column identifies the safe design attribute. The design value can be found in ETC4009614. Modeled value in criticality calculation may be more conservative than the design value.

Column D: This column identifies the applicable guidewords from the ISA HAZOP procedure that are used to assess the criticality design margin. Additional guidewords are addressed as applicable in the detailed assessment.

Column E: This column provides any notes, comments and concluding statements.

LBDCR-10-0012

~~Table 3.7-8 Tails System~~

~~Criticality Assessment of Passive Safe-By-Design Components~~				
~~Component Description (A)~~	~~Sequence ID (B)~~	~~Critical Design Attribute C)~~	~~Review of Up-Set Conditions to Change Geometry (Applicable HAZOP Guidewords) (D)~~	~~Notes/Comments (E)~~
~~Tails Piping (largest piping diameter in the system)~~	~~LOSS OF SAFE-BY-DESIGN ATTRIBUTE~~	~~DIAMETER 24.4 cm (ID) Keff = 1.0 @ 6 wt %~~		~~Based on qualitative assessment, there is margin between the parameter values at normal operating conditions of pipe diameter, amount of ^{235}U and enrichment and the conservative design/analysis values for these parameters assumed for criticality.~~
			~~More Heat~~	~~Based on qualitative assessment, it is highly unlikely for a process deviation to result in a more heat condition that would cause an approach to the critical safe diameter and to adversely affect the maintenance of margin to criticality associated with design and maximum operating parameter values for amount of ^{235}U and enrichment.~~
			~~More Pressure~~	~~Based on qualitative assessment, it is highly unlikely for a process deviation to result in a more pressure condition that would cause an approach to the critical safe diameter and to adversely affect the maintenance of margin to criticality associated with design and maximum operating parameter values for amount of ^{235}U and enrichment.~~
			~~Corrosion/ Erosion~~	~~Based on qualitative assessment, it is highly unlikely for a process deviation to result in a corrosion/erosion condition that would cause an approach to the critical safe diameter. Materials are corrosion/erosion resistant and postulated complete wall erosion would not exceed the critical safe diameter.~~
			~~Loss of Confinement or Leakage~~	~~Based on qualitative assessment, postulated loss of piping system confinement or leakage will not result in any appreciable accumulation of ^{235}U material because of physical limitations of the process (sub-atmospheric). As a result, loss of confinement does not result in a potential for criticality and therefore its consequence is low.~~
			~~Fire~~	~~Components shall be protected from fire to ensure the critical design attribute of diameter is not adversely impacted.~~
			~~Maintenance~~	~~Configuration Management shall ensure that maintenance does not adversely impact the critical design attribute of diameter.~~
				~~Double Contingency Principle is satisfied as follows. The geometry is criticality safe and no single credible event or failure has been identified whereby the geometry could become unsafe. The enrichment is also controlled such that no single credible failure could result in loss of enrichment control.~~
~~Tails Piping Arrangement~~	~~LOSS OF SAFE-BY-DESIGN ATTRIBUTE~~	~~PHYSICAL ARRANGEMENT~~		~~Based on qualitative assessment, there is margin between the normal operating conditions and the conservative design/analysis conditions assumed for criticality.~~
			~~More Heat~~	~~Based on qualitative assessment, it is highly unlikely for a process deviation to result in a more heat condition that would adversely affect the maintenance of margin to criticality associated with design and maximum operating parameter values for amount of ^{235}U and enrichment.~~

~~Table 3.7-8 Tails System~~

~~Criticality Assessment of Passive Safe By Design Components~~				
~~Component Description (A)~~	~~Sequence ID (B)~~	~~Critical Design Attribute C)~~	~~Review of Up-Set Conditions to Change Geometry (Applicable HAZOP Guidewords) (D)~~	~~Notes/Comments (E)~~
			~~More Pressure~~	~~Based on qualitative assessment, it is highly unlikely for a process deviation to result in a more pressure condition that would adversely affect the maintenance of margin to criticality associated with design and maximum operating parameter values for amount of ^{235}U and enrichment.~~
			~~Corrosion/ Erosion~~	~~Based on qualitative assessment, it is highly unlikely for a process deviation to result in a corrosion/erosion condition that would affect the maintenance of margin to criticality associated with design and maximum operating parameter values for physical arrangement.~~
			~~Loss of Confinement or Leakage~~	~~Based on qualitative assessment, postulated loss of piping system confinement or leakage will not result in any appreciable accumulation of ^{235}U material because of physical limitations of the process (sub-atmospheric). As a result, loss of confinement does not result in a potential for criticality and therefore its consequence is low.~~
			~~Fire~~	~~Components shall be protected from fire to ensure the critical design attribute of physical arrangement is not adversely impacted.~~
			~~Maintenance~~	~~Configuration Management shall ensure that maintenance does not adversely impact the critical design attribute of physical arrangement.~~
			~~Impact/Drop~~	~~Components shall be protected from impact/drop to ensure the critical design attribute of physical arrangement is not adversely impacted.~~
			~~External Events (Construction on Site)~~	~~Components shall be protected from construction on Site to ensure the critical design attribute of physical arrangement is not adversely impacted.~~
			~~External Events (Failure of Above Ground Liquid Storage Tanks)~~	~~Components shall be protected from external flooding (Failure of Above Ground Liquid Storage Tanks) to ensure the critical design attribute of physical arrangement is not adversely impacted.~~
			~~External Events (External Fire)~~	~~Components shall be protected from external fire events to ensure the critical design attribute of physical arrangement is not adversely impacted.~~
				~~Double Contingency Principle is satisfied as follows. The geometry is criticality safe and no single credible event or failure has been identified whereby the geometry could become unsafe. The enrichment is also controlled such that no single credible failure could result in loss of enrichment control.~~
~~Tails Pump Set~~	~~LOSS OF SAFE-BY-DESIGN ATTRIBUTE~~	~~PHYSICAL ARRANGEMENT~~		~~Based on qualitative assessment, there is margin between the normal operating conditions and the conservative design/analysis conditions assumed for criticality.~~
			~~More Heat~~	~~Based on qualitative assessment, it is highly unlikely for a process deviation to result in a more heat condition that would adversely affect the maintenance of margin to criticality associated with design and maximum operating parameter values for amount of ^{235}U and enrichment.~~

~~Table 3.7-8 Tails System~~

~~Criticality Assessment of Passive Safe-By-Design Components~~				
~~Component Description (A)~~	~~Sequence ID (B)~~	~~Critical Design Attribute (C)~~	~~Review of Up-Set Conditions to Change Geometry (Applicable HAZOP Guidewords) (D)~~	~~Notes/Comments (E)~~
			~~More Pressure~~	~~Based on qualitative assessment, it is highly unlikely for a process deviation to result in a more pressure condition that would adversely affect the maintenance of margin to criticality associated with design and maximum operating parameter values for amount of ^{235}U and enrichment.~~
			~~Corrosion/ Erosion~~	~~Based on qualitative assessment, it is highly unlikely for a process deviation to result in a corrosion/erosion condition that would affect the maintenance of margin to criticality associated with design and maximum operating parameter values for physical arrangement.~~
			~~Loss of Confinement or Leakage~~	~~Based on qualitative assessment, postulated loss of Tails Pump Set confinement or leakage will not result in any appreciable accumulation of ^{235}U material because of physical limitations of the process (sub-atmospheric). As a result, loss of confinement does not result in a potential for criticality and therefore its consequence is low.~~
			~~Fire~~	~~Components shall be protected from fire to ensure the critical design attribute of physical arrangement is not adversely impacted.~~
			~~Maintenance~~	~~Configuration Management shall ensure that maintenance does not adversely impact the critical design attribute of physical arrangement.~~
			~~Impact/Drop~~	~~Components shall be protected from impact/drop to ensure the critical design attribute of physical arrangement is not adversely impacted.~~
			~~External Events (Construction on Site)~~	~~Components shall be protected from construction on Site to ensure the critical design attribute of physical arrangement is not adversely impacted.~~
			~~External Events (Failure of Above Ground Liquid Storage Tanks)~~	~~Components shall be protected from external flooding (Failure of Above Ground Liquid Storage Tanks) to ensure the critical design attribute of physical arrangement is not adversely impacted.~~
			~~External Events (External Fire)~~	~~Components shall be protected from external fire events to ensure the critical design attribute of physical arrangement is not adversely impacted.~~
				~~Double Contingency Principle is satisfied as follows. The geometry is criticality safe and no single credible event or failure has been identified whereby the geometry could become unsafe. The enrichment is also controlled such that no single credible failure could result in loss of enrichment control.~~

~~Table 3.7-8 — Tails System~~

~~Criticality Assessment of Passive Safe By Design Components~~				
~~Component Description (A)~~	~~Sequence ID (B)~~	~~Critical Design Attribute C)~~	~~Review of Up-Set Conditions to Change Geometry (Applicable HAZOP Guidewords) (D)~~	~~Notes/Comments (E)~~
~~Tails Evacuation Pump~~	~~LOSS OF SAFE-BY-DESIGN ATTRIBUTE~~	~~VOLUME 24 liters Keff = 1.0 @ 6 wt %~~		~~Based on qualitative assessment, there is margin between the parameter values at normal operating conditions of Tails Evacuation Pump volume, amount of ^{235}U and enrichment and the conservative design/analysis values for these parameters assumed for criticality.~~
			~~More Heat~~	~~Based on qualitative assessment, it is highly unlikely for a process deviation to result in a more heat condition that would cause an approach to the critical safe volume and to adversely affect the maintenance of margin to criticality associated with design and maximum operating parameter values for amount of ^{235}U and enrichment.~~
			~~More Pressure~~	~~Based on qualitative assessment, it is highly unlikely for a process deviation to result in a more pressure condition that would cause an approach to the critical safe volume and to adversely affect the maintenance of margin to criticality associated with design and maximum operating parameter values for amount of ^{235}U and enrichment.~~
			~~Corrosion/ Erosion~~	~~Based on qualitative assessment, it is highly unlikely for a process deviation to result in a corrosion/erosion condition that would cause an approach to the critical safe volume. Materials are corrosion/erosion resistant and postulated complete wall erosion would not exceed the critical safe volume.~~
			~~Loss of Confinement or Leakage~~	~~Based on qualitative assessment, postulated loss of Tails Evacuation Pump confinement or leakage will not result in any appreciable accumulation of ^{235}U material because of physical limitations of the process (sub-atmospheric). As a result, loss of confinement does not result in a potential for criticality and therefore its consequence is low.~~
			~~Fire~~	~~Components shall be protected from fire to ensure the critical design attribute of volume is not adversely impacted.~~
			~~Maintenance~~	~~Configuration Management shall ensure that maintenance does not adversely impact the critical design attribute of volume.~~
				~~Double Contingency Principle is satisfied as follows. The geometry is criticality safe and no single credible event or failure has been identified whereby the geometry could become unsafe. The enrichment is also controlled such that no single credible failure could result in loss of enrichment control.~~
~~Carbon Trap (Tails Evacuation)~~	~~LOSS OF SAFE-BY-DESIGN ATTRIBUTE~~	~~DIAMETER 24.4 cm (ID) Keff = 1.0 @ 6 wt %~~		~~Based on qualitative assessment, there is margin between the parameter values at normal operating conditions of Carbon Trap diameter, amount of ^{235}U and enrichment and the conservative design/analysis values for these parameters assumed for criticality.~~
			~~More Heat~~	~~Based on qualitative assessment, it is highly unlikely for a process deviation to result in a more heat condition that would cause an approach to the critical safe diameter and to adversely affect the maintenance of margin to criticality associated with design and maximum operating parameter values for amount of ^{235}U and enrichment.~~

~~Table 3.7-8 – Tails System~~

~~Criticality Assessment of Passive Safe-By-Design Components~~				
~~Component Description (A)~~	~~Sequence ID (B)~~	~~Critical Design Attribute C)~~	~~Review of Up-Set Conditions to Change Geometry (Applicable HAZOP Guidewords) (D)~~	~~Notes/Comments (E)~~
			~~More Pressure~~	~~Based on qualitative assessment, it is highly unlikely for a process deviation to result in a more pressure condition that would cause an approach to the critical safe diameter and to adversely affect the maintenance of margin to criticality associated with design and maximum operating parameter values for amount of ^{235}U and enrichment.~~
			~~Corrosion/ Erosion~~	~~Based on qualitative assessment, it is highly unlikely for a process deviation to result in a corrosion/erosion condition that would cause an approach to the critical safe diameter. Materials are corrosion/erosion resistant and postulated complete wall erosion would not exceed the critical safe diameter.~~
			~~Loss of Confinement or Leakage~~	~~Based on qualitative assessment, postulated loss of Carbon Trap confinement or leakage will not result in any appreciable accumulation of ^{235}U material because of physical limitations of the process (sub-atmospheric). As a result, loss of confinement does not result in a potential for criticality and therefore its consequence is low.~~
			~~Fire~~	~~Components shall be protected from fire to ensure the critical design attribute of diameter is not adversely impacted.~~
			~~Maintenance~~	~~Configuration Management shall ensure that maintenance does not adversely impact the critical design attribute of diameter.~~
				~~Double Contingency Principle is satisfied as follows. The geometry is criticality safe and no single credible event or failure has been identified whereby the geometry could become unsafe. The enrichment is also controlled such that no single credible failure could result in loss of enrichment control.~~
~~**Aluminum Oxide Trap (Tails Evacuation)**~~	~~LOSS OF SAFE-BY-DESIGN ATTRIBUTE~~	~~**DIAMETER** 24.4 cm (ID) Keff = 1.0 @ 6 wt %~~		~~Based on qualitative assessment, there is margin between the parameter values at normal operating conditions of Aluminum Oxide Trap diameter, amount of ^{235}U and enrichment and the conservative design/analysis values for these parameters assumed for criticality.~~
			~~More Heat~~	~~Based on qualitative assessment, it is highly unlikely for a process deviation to result in a more heat condition that would cause an approach to the critical safe diameter and to adversely affect the maintenance of margin to criticality associated with design and maximum operating parameter values for amount of ^{235}U and enrichment.~~
			~~More Pressure~~	~~Based on qualitative assessment, it is highly unlikely for a process deviation to result in a more pressure condition that would cause an approach to the critical safe diameter and to adversely affect the maintenance of margin to criticality associated with design and maximum operating parameter values for amount of ^{235}U and enrichment.~~
			~~Corrosion/ Erosion~~	~~Based on qualitative assessment, it is highly unlikely for a process deviation to result in a corrosion/erosion condition that would cause an approach to the critical safe diameter. Materials are corrosion/erosion resistant and postulated complete wall erosion would not exceed the critical safe diameter.~~

~~Table 3.7-8 Tails System~~

~~Criticality Assessment of Passive Safe By Design Components~~				
~~Component Description (A)~~	~~Sequence ID (B)~~	~~Critical Design Attribute C)~~	~~Review of Up-Set Conditions to Change Geometry (Applicable HAZOP Guidewords) (D)~~	~~Notes/Comments (E)~~
			~~Loss of Confinement or Leakage~~	~~Based on qualitative assessment, postulated loss of Aluminum Oxide Trap confinement or leakage will not result in any appreciable accumulation of ^{235}U material because of physical limitations of the process (sub-atmospheric). As a result, loss of confinement does not result in a potential for criticality and therefore its consequence is low.~~
			~~Fire~~	~~Components shall be protected from fire to ensure the critical design attribute of diameter is not adversely impacted.~~
			~~Maintenance~~	~~Configuration Management shall ensure that maintenance does not adversely impact the critical design attribute of diameter.~~
				~~Double Contingency Principle is satisfied as follows. The geometry is criticality safe and no single credible event or failure has been identified whereby the geometry could become unsafe. The enrichment is also controlled such that no single credible failure could result in loss of enrichment control.~~
~~Chemical Absorber Oil Trap (Tails Evacuation)~~	~~LOSS OF SAFE BY DESIGN ATTRIBUTE~~	~~VOLUME 24 liters Keff = 1.0 @ 6 wt.%~~		~~Based on qualitative assessment, there is margin between the parameter values at normal operating conditions of Chemical Absorber Oil Trap volume, amount of ^{235}U and enrichment and the conservative design/analysis values for these parameters assumed for criticality.~~
			~~More Heat~~	~~Based on qualitative assessment, it is highly unlikely for a process deviation to result in a more heat condition that would cause an approach to the critical safe volume and to adversely affect the maintenance of margin to criticality associated with design and maximum operating parameter values for amount of ^{235}U and enrichment.~~
			~~More Pressure~~	~~Based on qualitative assessment, it is highly unlikely for a process deviation to result in a more pressure condition that would cause an approach to the critical safe volume and to adversely affect the maintenance of margin to criticality associated with design and maximum operating parameter values for amount of ^{235}U and enrichment.~~
			~~Corrosion/ Erosion~~	~~Based on qualitative assessment, it is highly unlikely for a process deviation to result in a corrosion/erosion condition that would cause an approach to the critical safe volume. Materials are corrosion/erosion resistant and postulated complete wall erosion would not exceed the critical safe volume.~~
			~~Loss of Confinement or Leakage~~	~~Based on qualitative assessment, postulated loss of Chemical Absorber Oil Trap confinement or leakage will not result in any appreciable accumulation of ^{235}U material because of physical limitations of the process (sub-atmospheric). As a result, loss of confinement does not result in a potential for criticality and therefore its consequence is low.~~
			~~Fire~~	~~Components shall be protected from fire to ensure the critical design attribute of volume is not adversely impacted.~~

~~Table 3.7-8 Tails System~~

~~Criticality Assessment of Passive Safe By Design Components~~				
~~Component Description (A)~~	~~Sequence ID (B)~~	~~Critical Design Attribute C)~~	~~Review of Up-Set Conditions to Change Geometry (Applicable HAZOP Guidewords) (D)~~	~~Notes/Comments (E)~~
			~~Maintenance~~	~~Configuration Management shall ensure that maintenance does not adversely impact the critical design attribute of volume.~~
				~~Double Contingency Principle is satisfied as follows. The geometry is criticality safe and no single credible event or failure has been identified whereby the geometry could become unsafe. The enrichment is also controlled such that no single credible failure could result in loss of enrichment control.~~
~~Oil Trap (Tails Evacuation)~~	~~LOSS OF SAFE BY-DESIGN ATTRIBUTE~~	~~DIAMETER 24.4 cm (ID) Keff = 1.0 @ 6 wt %~~		~~Based on qualitative assessment, there is margin between the parameter values at normal operating conditions of Oil Trap diameter, amount of ^{235}U and enrichment and the conservative design/analysis values for these parameters assumed for criticality.~~
			~~More Heat~~	~~Based on qualitative assessment, it is highly unlikely for a process deviation to result in a more heat condition that would cause an approach to the critical safe diameter and to adversely affect the maintenance of margin to criticality associated with design and maximum operating parameter values for amount of ^{235}U and enrichment.~~
			~~More Pressure~~	~~Based on qualitative assessment, it is highly unlikely for a process deviation to result in a more pressure condition that would cause an approach to the critical safe diameter and to adversely affect the maintenance of margin to criticality associated with design and maximum operating parameter values for amount of ^{235}U and enrichment.~~
			~~Corrosion/ Erosion~~	~~Based on qualitative assessment, it is highly unlikely for a process deviation to result in a corrosion/erosion condition that would cause an approach to the critical safe diameter. Materials are corrosion/erosion resistant and postulated complete wall erosion would not exceed the critical safe diameter.~~
			~~Loss of Confinement or Leakage~~	~~Based on qualitative assessment, postulated loss of Oil Trap confinement or leakage will not result in any appreciable accumulation of ^{235}U material because of physical limitations of the process (sub-atmospheric). As a result, loss of confinement does not result in a potential for criticality and therefore its consequence is low.~~
			~~Fire~~	~~Components shall be protected from fire to ensure the critical design attribute of diameter is not adversely impacted.~~
			~~Maintenance~~	~~Configuration Management shall ensure that maintenance does not adversely impact the critical design attribute of diameter.~~
				~~Double Contingency Principle is satisfied as follows. The geometry is criticality safe and no single credible event or failure has been identified whereby the geometry could become unsafe. The enrichment is also controlled such that no single credible failure could result in loss of enrichment control.~~

~~Table 3.7-8 Tails System~~

~~Criticality Assessment of Passive Safe-By-Design Components~~				
~~Component Description (A)~~	~~Sequence ID (B)~~	~~Critical Design Attribute (C)~~	~~Review of Up-Set Conditions to Change Geometry (Applicable HAZOP Guidewords) (D)~~	~~Notes/Comments (E)~~
~~Vacuum Cleaner~~	~~LOSS OF SAFE-BY-DESIGN ATTRIBUTE~~	~~DIAMETER 24.4 cm (ID) Keff = 1.0 @ 6 wt.%~~		~~Based on qualitative assessment, there is margin between the parameter value at normal operating conditions of Vacuum Cleaner diameter and the conservative design/analysis value for this parameter assumed for criticality.~~
			~~More Heat~~	~~Based on qualitative assessment, it is highly unlikely for a process deviation to result in a more heat condition that would cause an approach to the critical safe diameter and to adversely affect the maintenance of margin to criticality associated with design and maximum operating parameter value.~~
			~~More Pressure~~	~~Based on qualitative assessment, it is highly unlikely for a process deviation to result in a more pressure condition that would cause an approach to the critical safe diameter and to adversely affect the maintenance of margin to criticality associated with design and maximum operating parameter value.~~
			~~Corrosion/ Erosion~~	~~Based on qualitative assessment, it is highly unlikely for a process deviation to result in a corrosion/erosion condition that would cause an approach to the critical safe diameter. Materials are corrosion/erosion resistant and postulated complete wall erosion would not exceed the critical safe diameter.~~
			~~Loss of Confinement or Leakage~~	~~Based on qualitative assessment, postulated loss of Vacuum Cleaner confinement or leakage will not result in any appreciable accumulation of ^{235}U. As a result, loss of confinement does not result in a potential for criticality and therefore its consequence is low.~~
			~~Fire~~	~~Components shall be protected from fire to ensure the critical design attribute of diameter is not adversely impacted.~~
			~~Maintenance~~	~~Configuration Management shall ensure that maintenance does not adversely impact the critical design attribute of diameter.~~
			~~Impact/Drop~~	~~Components shall be protected from Impact/Drop to ensure the critical design attribute of diameter is not adversely impacted.~~
			~~External Events (Construction on Site)~~	~~Components shall be protected from Construction on Site to ensure the critical design attribute of diameter is not adversely impacted.~~
			~~External Events (Failure of Above-Ground Liquid Tanks)~~	~~Components shall be protected from Failure of Above-Ground Liquid Tanks to ensure the critical design attribute of diameter is not adversely impacted.~~
			~~External Events (Seismic)~~	~~Components shall be protected from Seismic events to ensure the critical design attribute of diameter is not adversely impacted.~~
			~~External Events (Tornado)~~	~~Components shall be protected from Tornado events to ensure the critical design attribute of diameter is not adversely impacted.~~

~~Table 3.7-8 Tails System~~

~~Criticality Assessment of Passive Safe-By-Design Components~~				
~~Component Description (A)~~	~~Sequence ID (B)~~	~~Critical Design Attribute C)~~	~~Review of Up-Set Conditions to Change Geometry (Applicable HAZOP Guidewords) (D)~~	~~Notes/Comments (E)~~
				~~Double Contingency Principle is satisfied as follows. The geometry is criticality safe and no single credible event or failure has been identified whereby the geometry could become unsafe. The enrichment is also controlled such that no single credible failure could result in loss of enrichment control.~~
~~Tails Evacuation Pump/Chemical Trap Set~~	~~LOSS OF SAFE-BY-DESIGN ATTRIBUTE~~	~~PHYSICAL ARRANGEMENT~~		~~Based on qualitative assessment, there is margin between the normal operating conditions and the conservative design/analysis conditions assumed for criticality.~~
			~~More Heat~~	~~Based on qualitative assessment, it is highly unlikely for a process deviation to result in a more heat condition that would adversely affect the maintenance of margin to criticality associated with design and maximum operating parameter values for amount of ^{235}U and enrichment.~~
			~~More Pressure~~	~~Based on qualitative assessment, it is highly unlikely for a process deviation to result in a more pressure condition that would adversely affect the maintenance of margin to criticality associated with design and maximum operating parameter values for amount of ^{235}U and enrichment.~~
			~~Corrosion/ Erosion~~	~~Based on qualitative assessment, it is highly unlikely for a process deviation to result in a corrosion/erosion condition that would affect the maintenance of margin to criticality associated with design and maximum operating parameter values for physical arrangement.~~
			~~Loss of Confinement or Leakage~~	~~Based on qualitative assessment, postulated loss of Tails Evacuation Pump/Chemical Trap Set confinement or leakage will not result in any appreciable accumulation of ^{235}U material because of physical limitations of the process (sub-atmospheric). As a result, loss of confinement does not result in a potential for criticality and therefore its consequence is low.~~
			~~Fire~~	~~Components shall be protected from fire to ensure the critical design attribute of physical arrangement is not adversely impacted.~~
			~~Maintenance~~	~~Configuration Management shall ensure that maintenance does not adversely impact the critical design attribute of physical arrangement.~~
			~~Impact/Drop~~	~~Components shall be protected from impact/drop to ensure the critical design attribute of physical arrangement is not adversely impacted.~~
			~~External Events (Construction on Site)~~	~~Components shall be protected from construction on Site to ensure the critical design attribute of physical arrangement is not adversely impacted.~~
			~~External Events (Failure of Above-Ground Liquid Storage Tanks)~~	~~Components shall be protected from external flooding (Failure of Above-Ground Liquid Storage Tanks) to ensure the critical design attribute of physical arrangement is not adversely impacted.~~
			~~External Events (External Fire)~~	~~Components shall be protected from external fire events to ensure the critical design attribute of physical arrangement is not adversely impacted.~~

~~Table 3.7-8 Tails System~~

~~Criticality Assessment of Passive Safe-By-Design Components~~				
~~Component Description (A)~~	~~Sequence ID (B)~~	~~Critical Design Attribute C)~~	~~Review of Up-Set Conditions to Change Geometry (Applicable HAZOP Guidewords) (D)~~	~~Notes/Comments (E)~~
				~~Double Contingency Principle is satisfied as follows. The geometry is criticality safe and no single credible event or failure has been identified whereby the geometry could become unsafe. The enrichment is also controlled such that no single credible failure could result in loss of enrichment control.~~
~~Pump Transport Device~~	~~LOSS OF SAFE-BY-DESIGN ATTRIBUTE~~	~~PHYSICAL ARRANGEMENT~~		~~Based on qualitative assessment, there is margin between the normal operating conditions and the conservative design/analysis conditions assumed for criticality.~~
			~~Corrosion/ Erosion~~	~~Based on qualitative assessment, it is highly unlikely for a process deviation to result in a corrosion/erosion condition that would affect the maintenance of margin to criticality associated with design and maximum operating parameter values for physical arrangement.~~
			~~Fire~~	~~Components shall be protected from fire to ensure the critical design attribute of physical arrangement is not adversely impacted.~~
			~~Maintenance~~	~~Configuration Management shall ensure that maintenance does not adversely impact the critical design attribute of physical arrangement.~~
			~~Impact/Drop~~	~~Components shall be protected from impact/drop to ensure the critical design attribute of physical arrangement is not adversely impacted.~~
			~~External Events (Construction on Site)~~	~~Components shall be protected from construction on Site to ensure the critical design attribute of physical arrangement is not adversely impacted.~~
			~~External Events (Failure of Above Ground Liquid Storage Tanks)~~	~~Components shall be protected from external flooding (Failure of Above Ground Liquid Storage Tanks) to ensure the critical design attribute of physical arrangement is not adversely impacted.~~
			~~External Events (External Fire)~~	~~Components shall be protected from external fire events to ensure the critical design attribute of physical arrangement is not adversely impacted.~~
				~~Double Contingency Principle is satisfied as follows. The geometry is criticality safe and no single credible event or failure has been identified whereby the geometry could become unsafe. The enrichment is also controlled such that no single credible failure could result in loss of enrichment control.~~
~~Chemical Trap Transport Device~~	~~LOSS OF SAFE-BY-DESIGN ATTRIBUTE~~	~~PHYSICAL ARRANGEMENT~~		~~Based on qualitative assessment, there is margin between the normal operating conditions and the conservative design/analysis conditions assumed for criticality.~~
			~~Corrosion/ Erosion~~	~~Based on qualitative assessment, it is highly unlikely for a process deviation to result in a corrosion/erosion condition that would affect the maintenance of margin to criticality associated with design and maximum operating parameter values for physical arrangement.~~

~~Table 3.7-8 Tails System~~

~~Criticality Assessment of Passive Safe By Design Components~~				
~~Component Description (A)~~	~~Sequence ID (B)~~	~~Critical Design Attribute C)~~	~~Review of Up-Set Conditions to Change Geometry (Applicable HAZOP Guidewords) (D)~~	~~Notes/Comments (E)~~
			~~Fire~~	~~Components shall be protected from fire to ensure the critical design attribute of physical arrangement is not adversely impacted.~~
			~~Maintenance~~	~~Configuration Management shall ensure that maintenance does not adversely impact the critical design attribute of physical arrangement.~~
			~~Impact/Drop~~	~~Components shall be protected from impact/drop to ensure the critical design attribute of physical arrangement is not adversely impacted.~~
			~~External Events (Construction on Site)~~	~~Components shall be protected from construction on Site to ensure the critical design attribute of physical arrangement is not adversely impacted.~~
			~~External Events (Failure of Above-Ground Liquid Storage Tanks)~~	~~Components shall be protected from external flooding (Failure of Above-Ground Liquid Storage Tanks) to ensure the critical design attribute of physical arrangement is not adversely impacted.~~
			~~External Events (External Fire)~~	~~Components shall be protected from external fire events to ensure the critical design attribute of physical arrangement is not adversely impacted.~~
				~~Double Contingency Principle is satisfied as follows. The geometry is criticality safe and no single credible event or failure has been identified whereby the geometry could become unsafe. The enrichment is also controlled such that no single credible failure could result in loss of enrichment control.~~
~~Mobile UF_6 Rig~~	~~LOSS OF SAFE-BY-DESIGN ATTRIBUTE~~	~~PHYSICAL ARRANGEMENT~~		~~Based on qualitative assessment, there is margin between the normal operating conditions and the conservative design/analysis conditions assumed for criticality.~~
			~~More Heat~~	~~Based on qualitative assessment, it is highly unlikely for a process deviation to result in a more heat condition that would adversely affect the maintenance of margin to criticality associated with design and maximum operating parameter values for amount of ^{235}U and enrichment.~~
			~~More Pressure~~	~~Based on qualitative assessment, it is highly unlikely for a process deviation to result in a more pressure condition that would adversely affect the maintenance of margin to criticality associated with design and maximum operating parameter values for amount of ^{235}U and enrichment.~~
			~~Corrosion/ Erosion~~	~~Based on qualitative assessment, it is highly unlikely for a process deviation to result in a corrosion/erosion condition that would affect the maintenance of margin to criticality associated with design and maximum operating parameter values for physical arrangement.~~
			~~Loss of Confinement or Leakage~~	~~Based on qualitative assessment, postulated loss of Mobile UF_6 Rig confinement or leakage will not result in any appreciable accumulation of ^{235}U material because of physical limitations of the process (sub-atmospheric). As a result, loss of confinement does not result in a potential for criticality and therefore its consequence is low.~~

~~Table 3.7-8 Tails System~~

~~Criticality Assessment of Passive Safe-By-Design Components~~				
~~Component Description (A)~~	~~Sequence ID (B)~~	~~Critical Design Attribute C)~~	~~Review of Up-Set Conditions to Change Geometry (Applicable HAZOP Guidewords) (D)~~	~~Notes/Comments (E)~~
			~~Fire~~	~~Components shall be protected from fire to ensure the critical design attribute of physical arrangement is not adversely impacted.~~
			~~Maintenance~~	~~Configuration Management shall ensure that maintenance does not adversely impact the critical design attribute of physical arrangement.~~
			~~Impact/Drop~~	~~Components shall be protected from impact/drop to ensure the critical design attribute of physical arrangement is not adversely impacted.~~
			~~External Events (Construction on Site)~~	~~Components shall be protected from construction on Site to ensure the critical design attribute of physical arrangement is not adversely impacted.~~
			~~External Events (Failure of Above-Ground Liquid Storage Tanks)~~	~~Components shall be protected from external flooding (Failure of Above-Ground Liquid Storage Tanks) to ensure the critical design attribute of physical arrangement is not adversely impacted.~~
			~~External Events (External Fire)~~	~~Components shall be protected from external fire events to ensure the critical design attribute of physical arrangement is not adversely impacted.~~
				~~Double Contingency Principle is satisfied as follows.. The geometry is criticality safe and no single credible event or failure has been identified whereby the geometry could become unsafe. The enrichment is also controlled such that no single credible failure could result in loss of enrichment control.~~
~~Finger Sample Bottle~~	~~LOSS OF SAFE-BY-DESIGN ATTRIBUTE~~	~~DIAMETER 24.4 cm (ID) Keff = 1.0 @ 6 wt %~~		~~Based on qualitative assessment, there is margin between the parameter values at normal operating conditions of Finger Sample Bottle diameter, amount of ^{235}U and enrichment and the conservative design/analysis values for these parameters assumed for criticality.~~
			~~More Heat~~	~~Based on qualitative assessment, it is highly unlikely for a process deviation to result in a more heat condition that would cause an approach to the critical safe diameter and to adversely affect the maintenance of margin to criticality associated with design and maximum operating parameter values for amount of ^{235}U and enrichment.~~
			~~More Pressure~~	~~Based on qualitative assessment, it is highly unlikely for a process deviation to result in a more pressure condition that would cause an approach to the critical safe diameter and to adversely affect the maintenance of margin to criticality associated with design and maximum operating parameter values for amount of ^{235}U and enrichment.~~
			~~Corrosion/ Erosion~~	~~Based on qualitative assessment, it is highly unlikely for a process deviation to result in a corrosion/erosion condition that would cause an approach to the critical safe diameter. Materials are corrosion/erosion resistant and postulated complete wall erosion would not exceed the critical safe diameter.~~

~~Table 3.7-8 Tails System~~

~~Criticality Assessment of Passive Safe-By-Design Components~~				
~~Component Description (A)~~	~~Sequence ID (B)~~	~~Critical Design Attribute C)~~	~~Review of Up-Set Conditions to Change Geometry (Applicable HAZOP Guidewords) (D)~~	~~Notes/Comments (E)~~
			~~Loss of Confinement or Leakage~~	~~Based on qualitative assessment, postulated loss of Finger Sample Bottle confinement or leakage will not result in any appreciable accumulation of ^{235}U material because of physical limitations of the process (sub-atmospheric). As a result, loss of confinement does not result in a potential for criticality and therefore its consequence is low.~~
			~~Fire~~	~~Components shall be protected from fire to ensure the critical design attribute of diameter is not adversely impacted.~~
			~~Maintenance~~	~~Configuration Management shall ensure that maintenance does not adversely impact the critical design attribute of diameter.~~
				~~Double Contingency Principle is satisfied as follows: The geometry is criticality safe and no single credible event or failure has been identified whereby the geometry could become unsafe. The enrichment is also controlled such that no single credible failure could result in loss of enrichment control.~~

~~**Column Descriptions:**~~

~~Column A: This column provides a brief description of each component.~~

~~Column B: This column identifies the accident sequence associated with the passive component.~~

~~Column C: This column identifies the critical design attribute under consideration along with the conservative values used in the criticality analysis.~~

~~Column D: This column identifies the applicable guidewords from the ISA HAZOP procedure that are used to assess the criticality design margin. Additional guidewords are addressed as applicable in the detailed assessment.~~

~~Column E: This column provides any notes, comments and concluding statements.~~

Table 3.7-8 Tails System

Criticality Assessment of Passive Safe-By-Design Components - ETC4009609				
Component Description (A)	Sequence ID (B)	Safe Design Attribute $k_{eff} < 0.95$ @ 6 wt % (unless physical arrangement) (Design Value, See Note) (C)	Review of Up-Set Conditions to Change Geometry (Applicable HAZOP Guidewords) (D)	Notes/Comments (E)
Tails Piping (largest piping diameter in the system)	LOSS OF SAFE-BY-DESIGN ATTRIBUTE	DIAMETER 22.4 cm		Based on qualitative assessment, there is margin between the parameter values at normal operating conditions of pipe diameter, amount of U^{235} and enrichment and the conservative design/analysis values for these parameters assumed for criticality.
Tails Piping Arrangement	LOSS OF SAFE-BY-DESIGN ATTRIBUTE	PHYSICAL ARRNGMT		Based on qualitative assessment, there is margin between the normal operating conditions and the conservative design/analysis conditions assumed for criticality.
WS1001 & WS251 Tails Roots Pumps	LOSS OF SAFE BY DESIGN ATTRIBUTE	VOLUME 19.3 liters		Based on qualitative assessment, there is margin between the parameter values at normal operating conditions of Roots Pump volume, amount of U^{235} and enrichment and the conservative design/analysis values for these parameters assumed for criticality.
WS1001 & WS251 Tails Roots Pump Set	LOSS OF SAFE-BY-DESIGN ATTRIBUTE	PHYSICAL ARRNGMNT Bounded by Product Pumps		Based on qualitative assessment, there is margin between the normal operating conditions and the conservative design/analysis conditions assumed for criticality.

LBDCR-10-0037

LBDCR-10-0012

Table 3.7-8 Tails System

Criticality Assessment of Passive Safe-By-Design Components - ETC4009609				
Component Description (A)	**Sequence ID (B)**	**Safe Design Attribute $k_{eff} < 0.95$ @ 6 wt % (unless physical arrangement) (Design Value, See Note) (C)**	**Review of Up-Set Conditions to Change Geometry (Applicable HAZOP Guidewords) (D)**	**Notes/Comments (E)**
Mixed Bed (Al_2O_3 & C) Type-A Trap (Tails Evacuation Rig)	LOSS OF SAFE-BY-DESIGN ATTRIBUTE	DIAMETER 22.4 cm		Based on qualitative assessment, there is margin between the parameter values at normal operating conditions of Mixed Bed Trap diameter, amount of U^{235} and enrichment and the conservative design/analysis values for these parameters assumed for criticality.
Al_2O_3 Adsorption Oil Filter (Tails Evacuation Rig)	LOSS OF SAFE-BY-DESIGN ATTRIBUTE	VOLUME 19.3 liters		Based on qualitative assessment, there is margin between the parameter values at normal operating conditions of Al_2O_3 Oil Filter volume, amount of U^{235} and enrichment and the conservative design/analysis values for these parameters assumed for criticality.
ARS40-65 Exhaust Oil Filter (Tails Evacuation Rig)	LOSS OF SAFE-BY-DESIGN ATTRIBUTE	VOLUME 19.3 liters		Based on qualitative assessment, there is margin between the parameter values at normal operating conditions of Exhaust Oil Filter volume, amount of U^{235} and enrichment and the conservative design/analysis values for these parameters assumed for criticality.

LBDCR-10-0037

LBDCR-10-0012

Table 3.7-8 Tails System

Criticality Assessment of Passive Safe-By-Design Components - ETC4009609				
Component Description (A)	Sequence ID (B)	Safe Design Attribute $k_{eff} < 0.95$ @ 6 wt % (unless physical arrangement) (Design Value, See Note) (C)	Review of Up-Set Conditions to Change Geometry (Applicable HAZOP Guidewords) (D)	Notes/Comments (E)
D40-BCS Rotary Vane Pump (Tails Evacuation Rig)	LOSS OF SAFE-BY-DESIGN ATTRIBUTE	VOLUME 19.3 liters		Based on qualitative assessment, there is margin between the parameter values at normal operating conditions of Rotary Vane Pump volume, amount of U^{235} and enrichment and the conservative design/analysis values for these parameters assumed for criticality.
Tails Evacuation Rig	LOSS OF SAFE-BY-DESIGN ATTRIBUTE	PHYSICAL ARRNGMNT Bounded by Product Pump & Trap Set		Based on qualitative assessment, there is margin between the normal operating conditions and the conservative design/analysis conditions assumed for criticality.
Assay Sampling Piping (largest pipe ID in system)	LOSS OF SAFE BY DESIGN ATTRIBUTE	DIAMETER 22.4 cm		Based on qualitative assessment, there is margin between the parameter values at normal operating conditions of pipe diameter, amount of U^{235} and enrichment and the conservative design/analysis values for these parameters assumed for criticality.
Assay Sampling Piping Arrangement	LOSS OF SAFE BY DESIGN ATTRIBUTE	PHYSICAL ARRNGMT Bounded by Product Piping Arrangement		Based on qualitative assessment, there is margin between the normal operating conditions and the conservative design/analysis conditions assumed for criticality.

LBDCR-10-0037

LBDCR-10-0012

Table 3.7-8 Tails System

Criticality Assessment of Passive Safe-By-Design Components - ETC4009609				
Component Description (A)	Sequence ID (B)	Safe Design Attribute $k_{eff} < 0.95$ @ 6 wt % (unless physical arrangement) (Design Value, See Note) (C)	Review of Up-Set Conditions to Change Geometry (Applicable HAZOP Guidewords) (D)	Notes/Comments (E)
Mixed Bed (Al_2O_3 & C) Type-A Trap (Assay Sampling Rig)	LOSS OF SAFE BY DESIGN ATTRIBUTE	DIAMETER 22.4 cm		Based on qualitative assessment, there is margin between the parameter values at normal operating conditions of Mixed Bed Trap diameter, amount of U^{235} and enrichment and the conservative design/analysis values for these parameters assumed for criticality.
Al_2O_3 Adsorption Oil Filter (Assay Sampling Rig)	LOSS OF SAFE-BY-DESIGN ATTRIBUTE	VOLUME 19.3 liters		Based on qualitative assessment, there is margin between the parameter values at normal operating conditions of Al_2O_3 Oil Filter volume, amount of U^{235} and enrichment and the conservative design/analysis values for these parameters assumed for criticality.
ARS40-65 Exhaust Oil Filter (Assay Sampling Rig)	LOSS OF SAFE BY DESIGN ATTRIBUTE	VOLUME 19.3 liters		Based on qualitative assessment, there is margin between the parameter values at normal operating conditions of Exhaust Oil Filter volume, amount of U^{235} and enrichment and the conservative design/analysis values for these parameters assumed for criticality.

LBDCR-10-0037

LBDCR-10-0012

Table 3.7-8 Tails System

Criticality Assessment of Passive Safe-By-Design Components - ETC4009609				
Component Description (A)	Sequence ID (B)	Safe Design Attribute $k_{eff} < 0.95$ @ 6 wt % (unless physical arrangement) (Design Value, See Note) (C)	Review of Up-Set Conditions to Change Geometry (Applicable HAZOP Guidewords) (D)	Notes/Comments (E)
D40-BCS Rotary Vane Pump (Assay Sampling Rig)	LOSS OF SAFE BY DESIGN ATTRIBUTE	VOLUME 19.3 liters		Based on qualitative assessment, there is margin between the parameter values at normal operating conditions of Rotary Vane Pump volume, amount of U^{235} and enrichment and the conservative design/analysis values for these parameters assumed for criticality.
Assay Sampling Rig	LOSS OF SAFE BY DESIGN ATTRIBUTE	PHYSICAL ARRNGMNT Bounded by Product Pump & Trap Set		Based on qualitative assessment, there is margin between the normal operating conditions and the conservative design/analysis conditions assumed for criticality.
Cold Trap (K300) (Mobile Maint'nce Rig)	LOSS OF SAFE BY DESIGN ATTRIBUTE	DIAMETER 22.4 cm		Based on qualitative assessment, there is margin between the parameter values at normal operating conditions of component diameter, amount of U^{235} and enrichment and the conservative design/analysis values for these parameters assumed for criticality.
Mixed Bed (Al_2O_3 & C) Type-A Trap (Mobile Maint'nce Rig)	LOSS OF SAFE BY DESIGN ATTRIBUTE	DIAMETER 22.4 cm		Based on qualitative assessment, there is margin between the parameter values at normal operating conditions of Mixed Bed Trap diameter, amount of U^{235} and enrichment and the conservative design/analysis values for these parameters assumed for criticality.

LBDCR-10-0037

LBDCR-10-0012

Table 3.7-8 Tails System

Criticality Assessment of Passive Safe-By-Design Components - ETC4009609				
Component Description (A)	Sequence ID (B)	Safe Design Attribute $k_{eff} < 0.95$ @ 6 wt % (unless physical arrangement) (Design Value, See Note) (C)	Review of Up-Set Conditions to Change Geometry (Applicable HAZOP Guidewords) (D)	Notes/Comments (E)
Al_2O_3 Adsorption Oil Filter (Mobile Maint'nce Rig)	LOSS OF SAFE BY DESIGN ATTRIBUTE	VOLUME 19.3 liters		Based on qualitative assessment, there is margin between the parameter values at normal operating conditions of Al_2O_3 Oil Filter volume, amount of U^{235} and enrichment and the conservative design/analysis values for these parameters assumed for criticality.
ARS40-65 Exhaust Oil Filter (Mobile Maint'nce Rig)	LOSS OF SAFE BY DESIGN ATTRIBUTE	VOLUME 19.3 liters		Based on qualitative assessment, there is margin between the parameter values at normal operating conditions of Exhaust Oil Filter volume, amount of U^{235} and enrichment and the conservative design/analysis values for these parameters assumed for criticality.
D40-BCS Rotary Vane Pump (Mobile Maint'nce Rig)	LOSS OF SAFE BY DESIGN ATTRIBUTE	VOLUME 19.3 liters		Based on qualitative assessment, there is margin between the parameter values at normal operating conditions of Rotary Vane Pump volume, amount of U^{235} and enrichment and the conservative design/analysis values for these parameters assumed for criticality.
WSU251 Roots Pump (Mobile Maint'nce Rig)	LOSS OF SAFE BY DESIGN ATTRIBUTE	VOLUME 19.3 liters		Based on qualitative assessment, there is margin between the normal operating conditions and the conservative design/analysis conditions assumed for criticality.

LBDCR-10-0037

LBDCR-10-0012

Table 3.7-8 Tails System

Criticality Assessment of Passive Safe-By-Design Components - ETC4009609				
Component Description (A)	Sequence ID (B)	Safe Design Attribute $k_{eff} < 0.95$ @ 6 wt % (unless physical arrangement) (Design Value, See Note) (C)	Review of Up-Set Conditions to Change Geometry (Applicable HAZOP Guidewords) (D)	Notes/Comments (E)
Mobile Maint'nce Rig	LOSS OF SAFE BY DESIGN ATTRIBUTE	PHYSICAL ARRNGMNT See Crit. Calc		Based on qualitative assessment, there is margin between the normal operating conditions and the conservative design/analysis conditions assumed for criticality.
Pipette	LOSS OF SAFE-BY-DESIGN ATTRIBUTE	DIAMETER 22.4 cm		Based on qualitative assessment, there is margin between the parameter values at normal operating conditions of Pipette diameter, amount of U^{235} and enrichment and the conservative design/analysis values for these parameters assumed for criticality.
Upset Conditions				
All			More Heat	Based on qualitative assessment, it is highly unlikely for a process deviation to result in a more heat condition that would adversely affect the maintenance of margin to criticality associated with design and maximum operating parameter values for amount of U^{235} and enrichment.
All			More Pressure	Based on qualitative assessment, it is highly unlikely for a process deviation to result in a more pressure condition that would adversely affect the maintenance of margin to criticality associated with design and maximum operating parameter values for amount of U^{235} and enrichment.
All			Corrosion/Erosion	Based on qualitative assessment, it is highly unlikely for a process deviation to result in a corrosion/erosion condition that would affect the maintenance of margin to criticality associated with design and maximum operating parameter values for physical arrangement.

LBDCR-10-0037

LBDCR-10-0012

Table 3.7-8 Tails System

Criticality Assessment of Passive Safe-By-Design Components - ETC4009609				
Component Description (A)	Sequence ID (B)	Safe Design Attribute $k_{eff} < 0.95$ @ 6 wt % (unless physical arrangement) (Design Value, See Note) (C)	Review of Up-Set Conditions to Change Geometry (Applicable HAZOP Guidewords) (D)	Notes/Comments (E)
All			Loss of Confinement or Leakage	Based on qualitative assessment, postulated loss of confinement or leakage will not result in any appreciable accumulation of U^{235} material because of physical limitations of the process (sub-atmospheric). As a result, loss of confinement does not result in a potential for criticality and therefore its consequence is low.
All			Fire	Components are protected from fire to ensure the safe design attribute of physical arrangement is not adversely impacted. The application of IROFS36a and its implementing procedure provides control of transient combustibles, limiting the fire magnitude and location in areas containing uranic material.
All			Maintenance	Approved maintenance procedures will be used to ensure that maintenance does not adversely impact the safe design attribute of physical arrangement. Maintenance is part of the generic management measures as described in Section 3.1.8.3 of the ISA Summary.
SBD Components by Physical Arrangement			Impact/Drop	Components are protected from impact/drop where necessary to ensure the safe design attribute of physical arrangement is not adversely impacted. Seismic II/I design criteria apply to support and anchorages of SBD components whose as-designed, safe configuration must be maintained during a design basis earthquake (DBE). Meeting these criteria provides protection from impact/drop due to a bounding event (i.e., DBE).
SBD Components by Physical Arrangement			External Events (Construction on Site)	Bounded by the seismic, tornado missile or impact/drop event in accordance with the ISA Meeting Minutes on Operate While Constructing.

LBDCR-10-0037

LBDCR-10-0012

Table 3.7-8 Tails System

Criticality Assessment of Passive Safe-By-Design Components - ETC4009609				
Component Description (A)	Sequence ID (B)	Safe Design Attribute $k_{eff} < 0.95$ @ 6 wt % (unless physical arrangement) (Design Value, See Note) (C)	Review of Up-Set Conditions to Change Geometry (Applicable HAZOP Guidewords) (D)	Notes/Comments (E)
SBD Components by Physical Arrangement			External Events (Failure of Above-Ground Liquid Storage Tanks)	Criticality due to this event is not credible, as it is bounded by local intense precipitation and protection from floods is no longer required as a result of LAR-08-07.
SBD Components by Physical Arrangement			External Events (Hurricane)	Not a design basis event for the NEF site due to its distance from the coast (ISA Summary, Section 3.2.3.4.3)
SBD Components by Physical Arrangement			External Events (Seismic)	Components are protected from seismic events where necessary to ensure the safe design attribute of physical arrangement is not adversely impacted. Unless specifically exempted by a nuclear criticality safety evaluation or analysis, SBD components and piping require seismic design to ensure that minimum spacing requirements are maintained in the event of a DBE or damage from a nearby II/I structure, system or component.
SBD Components by Physical Arrangement			External Events (Tornado)	Components are protected from tornado events with the application of IROFS27e to prevent building collapse to ensure the safe design attribute of physical arrangement is not adversely impacted.
SBD Components by Physical Arrangement			External Events (Tornado Missile)	Components are protected from tornado missile events where necessary to ensure the safe design attribute of physical arrangement is not adversely impacted. Unless specifically exempted by a nuclear criticality safety evaluation or analysis, SBD components and piping require tornado missile protection to ensure that minimum spacing requirements are maintained during a tornado event.

LBDCR-10-0037

LBDCR-10-0012

Table 3.7-8 Tails System

Criticality Assessment of Passive Safe-By-Design Components - ETC4009609				
Component Description (A)	Sequence ID (B)	Safe Design Attribute $k_{eff} < 0.95$ @ 6 wt % (unless physical arrangement) (Design Value, See Note) (C)	Review of Up-Set Conditions to Change Geometry (Applicable HAZOP Guidewords) (D)	Notes/Comments (E)
SBD Components by Physical Arrangement			External Events (Local Intense Precipitation)	Criticality due to this event is not credible as a result of LAR-08-07. Components are protected from local intense precipitation with the application of IROFS27e to prevent building collapse to ensure the safe design attribute of physical arrangement is not adversely impacted. IROFS27e does not prevent water intrusion. Flooding is included in nuclear criticality safety evaluations and analyses for SBD components and piping located on the first floor to demonstrate non-credibility. Items located on higher floors are not subject to flooding.
SBD Components by Physical Arrangement			External Events (External Fire)	Components are protected from external fire events with the application of IROFS35 (fire barriers) and IROFS36g (vegetation fire control) to ensure the safe design attribute of physical arrangement is not adversely impacted.
SBD Components by Physical Arrangement			External Events (Snow/Ice)	Components are protected from snow/ice events with the application of IROFS27e to prevent building collapse to ensure the safe design attribute of physical arrangement is not adversely impacted. Water intrusion due to the snow/ice events is bounded by local intense precipitation.
Adherence to Double Contingency Principle				

LBDCR-10-0037

LBDCR-10-0012

Table 3.7-8 Tails System

LBDCR-10-0037

Criticality Assessment of Passive Safe-By-Design Components - ETC4009609				
Component Description (A)	Sequence ID (B)	Safe Design Attribute $k_{eff} < 0.95$ @ 6 wt % (unless physical arrangement) (Design Value, See Note) (C)	Review of Up-Set Conditions to Change Geometry (Applicable HAZOP Guidewords) (D)	Notes/Comments (E)
All				Double Contingency Principle is satisfied as follows: The geometry is controlled such that the components are individually SBD by physical size or jointly SBD by physical arrangement, and no single credible event or failure has been identified that has the potential to adversely impact the safety function of the passive design features. The enrichment is also controlled such that no single credible event or failure could result in loss of enrichment control leading to criticality.

Column Descriptions:

Column A: This column provides a brief description of each component.

Column B: This column identifies the accident sequence associated with the passive component.

Column C: This column identifies the safe design attribute. The design value can be found in ETC4009609. Modeled value in criticality calculation may be more conservative than the design value.

Column D: This column identifies the applicable guidewords from the ISA HAZOP procedure that are used to assess the criticality design margin. Additional guidewords are addressed as applicable in the detailed assessment.

Column E: This column provides any notes, comments and concluding statements.

~~Table 3.7-11 Contingency Dump System~~

~~(Note 1)~~

~~Criticality Assessment of Passive Safe-By-Design Components~~				
~~Component Description (A)~~	~~Sequence ID (B)~~	~~Critical Design Attribute (C)~~	~~Review of Up-Set Conditions to Change Geometry (Applicable HAZOP Guidewords) (D)~~	~~Notes/Comments (E)~~
~~Contingency Dump Trap~~				
~~Contingency Dump Piping~~				
~~Contingency Dump Piping Arrangement~~				
~~Contingency Dump Buffer Volume Arrangement~~				
~~Contingency Dump Roots Pump~~				
~~Carbon Trap (Contingency Dump)~~				
~~Aluminum Oxide Trap (Contingency Dump)~~				
~~Chemical Absorber Oil Trap (Contingency Dump)~~				
~~Rotary Vane Vacuum Pump (Contingency Dump)~~				
~~Oil Trap (Contingency Dump)~~				
~~Contingency Dump Pump/Chemical Trap Set~~				
~~Vacuum Cleaner~~				
~~Pump Transport Device~~				
~~Chemical Trap Transport Device~~				
~~Mobile UF_6 Rig~~				

~~**Table 3.7-11 Note:**~~

~~1. The system is considered classified. As such, specific information regarding design of components has been intentionally excluded to protect the classified nature of the information.~~

~~**Column Descriptions:**~~

~~Column A: This column provides a brief description of each component.~~

~~Column B: This column identifies the accident sequence associated with the passive component.~~

~~Column C: This column identifies the critical design attribute under consideration along with the conservative values used in the criticality analysis.~~

~~Column D: This column identifies the applicable guidewords from the ISA HAZOP procedure that are used to assess the criticality design margin. Additional guidewords are addressed as applicable in the detailed assessment.~~

~~Column E: This column provides any notes, comments and concluding statements.~~

Table 3.7-11 Contingency Dump System

Criticality Assessment of Passive Safe-By-Design Components – ETC4009567					
Component Description (A)	**Sequence ID (B)**	**Safe Design Attribute $k_{eff} < 0.95$ @ 6 wt % (unless physical arrangement) (Design Value, See Note) (C)**	**Review of Up-Set Conditions to Change Geometry (Applicable HAZOP Guidewords) (D)**	**Notes/Comments (E)**	LBDCR-10-0037
Contingency Dump Piping (largest pipe in the system)	LOSS OF SAFE-BY-DESIGN ATTRIBUTE	DIAMETER 22.4 cm		Based on qualitative assessment, there is margin between the parameter values at normal operating conditions of pipe diameter, amount of U^{235} and enrichment and the conservative design analysis values for these parameters assumed for criticality.	
Contingency Dump Piping Arrangement (System 440)	LOSS OF SAFE-BY-DESIGN ATTRIBUTE	PHYSICAL ARRNGMNT See CDS Drawings & Crit. Calc		Based on qualitative assessment, there is margin between the normal operating conditions and the conservative design analysis conditions assumed for criticality.	LBDCR-10-0012
Contingency Dump NaF Traps	LOSS OF SAFE-BY-DESIGN ATTRIBUTE	PHYSICAL ARRNGMNT See Crit. Calc		Based on qualitative assessment, there is margin between the parameter values at normal operating conditions of NaF Trap arrangement, amount of U^{235} and enrichment and the conservative design/analysis values for these parameters assumed for criticality.	

Table 3.7-11 Contingency Dump System

Criticality Assessment of Passive Safe-By-Design Components – ETC4009567					
Component Description (A)	Sequence ID (B)	Safe Design Attribute $k_{eff} < 0.95$ @ 6 wt % (unless physical arrangement) (Design Value, See Note) (C)	Review of Up-Set Conditions to Change Geometry (Applicable HAZOP Guidewords) (D)	Notes/Comments (E)	LBDCR-10-0037
Contingency Dump Buffer Volume Arrangement	LOSS OF SAFE-BY-DESIGN ATTRIBUTE	PHYSICAL ARRNGMNT See CDS Drawings & Crit. Calc		Based on qualitative assessment, there is margin between the normal operating conditions and the conservative design/analysis conditions assumed for criticality.	
Mixed Bed (Al_2O_3 & C) Type-A Trap (Contingency Dump Vacuum Pump & Trap Set)	LOSS OF SAFE BY DESIGN ATTRIBUTE	DIAMETER 22.4cm		Based on qualitative assessment, there is margin between the parameter values at normal operating conditions of Mixed Bed Trap diameter, amount of U^{235} and enrichment and the conservative design/analysis values for these parameters assumed for criticality.	LBDCR-10-0012
Al_2O_3 Adsorption Oil Filter (Contingency Dump Pump & Trap Set)	LOSS OF SAFE BY DESIGN ATTRIBUTE	VOLUME 19.3 liters		Based on qualitative assessment, there is margin between the parameter values at normal operating conditions of Al_2O_3 Oil Filter volume, amount of U^{235} and enrichment and the conservative design/analysis values for these parameters assumed for criticality.	

Table 3.7-11 Contingency Dump System

Criticality Assessment of Passive Safe-By-Design Components – ETC4009567				
Component Description (A)	Sequence ID (B)	Safe Design Attribute $k_{eff} < 0.95$ @ 6 wt % (unless physical arrangement) (Design Value, See Note) (C)	Review of Up-Set Conditions to Change Geometry (Applicable HAZOP Guidewords) (D)	Notes/Comments (E)
ARS40-65 Exhaust Oil Filter (Contingency Dump Pump & Trap Set)	LOSS OF SAFE BY DESIGN ATTRIBUTE	VOLUME 19.3 liters		Based on qualitative assessment, there is margin between the parameter values at normal operating conditions of Exhaust Oil Filter volume, amount of U^{235} and enrichment and the conservative design/analysis values for these parameters assumed for criticality.
D40-BCS Rotary Vane Pump (Contingency Dump Pump & Trap Set)	LOSS OF SAFE BY DESIGN ATTRIBUTE	VOLUME 19.3 liters		Based on qualitative assessment, there is margin between the parameter values at normal operating conditions of Rotary Vane Pump volume, amount of U^{235} and enrichment and the conservative design/analysis values for these parameters assumed for criticality.
WSU251 Roots Pump (Contingency Dump Pump & Trap Set)	LOSS OF SAFE BY DESIGN ATTRIBUTE	VOLUME 19.3 liters		Based on qualitative assessment, there is margin between the normal operating conditions and the conservative design/analysis conditions assumed for criticality.
Contingency Dump Pump & Trap Set	LOSS OF SAFE BY DESIGN ATTRIBUTE	PHYSICAL ARRNGMNT Bounded by Product Pump & Trap Set		Based on qualitative assessment, there is margin between the normal operating conditions and the conservative design/analysis conditions assumed for criticality.

LBDCR-10-0037

LBDCR-10-0012

Table 3.7-11 Contingency Dump System

Criticality Assessment of Passive Safe-By-Design Components – ETC4009567				
Component Description (A)	Sequence ID (B)	Safe Design Attribute $k_{eff} < 0.95$ @ 6 wt % (unless physical arrangement) (Design Value, See Note) (C)	Review of Up-Set Conditions to Change Geometry (Applicable HAZOP Guidewords) (D)	Notes/Comments (E)
Cold Trap (K300) (Mobile Maintenance Rig)	LOSS OF SAFE BY DESIGN ATTRIBUTE	DIAMETER 22.4 cm		Based on qualitative assessment, there is margin between the parameter values at normal operating conditions of component diameter, amount of ^{235}U and enrichment and the conservative design/analysis values for these parameters assumed for criticality.
Mixed Bed (Al_2O_3 & C) Type-A Trap (Mobile Maintenance Rig)	LOSS OF SAFE BY DESIGN ATTRIBUTE	DIAMETER 22.4 cm		Based on qualitative assessment, there is margin between the parameter values at normal operating conditions of Mixed Bed Trap diameter, amount of ^{235}U and enrichment and the conservative design/analysis values for these parameters assumed for criticality.
Al_2O_3 Adsorption Oil Filter (Mobile Maintenance Rig)	LOSS OF SAFE BY DESIGN ATTRIBUTE	VOLUME 19.3 liters		Based on qualitative assessment, there is margin between the parameter values at normal operating conditions of Al_2O_3 Oil Filter volume, amount of ^{235}U and enrichment and the conservative design/analysis values for these parameters assumed for criticality.

LBDCR-10-0037

LBDCR-10-0012

Table 3.7-11 Contingency Dump System

Criticality Assessment of Passive Safe-By-Design Components – ETC4009567					
Component Description (A)	Sequence ID (B)	Safe Design Attribute $k_{eff} < 0.95$ @ 6 wt % (unless physical arrangement) (Design Value, See Note) (C)	Review of Up-Set Conditions to Change Geometry (Applicable HAZOP Guidewords) (D)	Notes/Comments (E)	LBDCR-10-0037
ARS40-65 Exhaust Oil Filter (Mobile Maintenance Rig)	LOSS OF SAFE BY DESIGN ATTRIBUTE	VOLUME 19.3 liters		Based on qualitative assessment, there is margin between the parameter values at normal operating conditions of Exhaust Oil Filter volume, amount of ^{235}U and enrichment and the conservative design/analysis values for these parameters assumed for criticality.	
D40-BCS Rotary Vane Pump (Mobile Maintenance Rig)	LOSS OF SAFE BY DESIGN ATTRIBUTE	VOLUME 19.3 liters		Based on qualitative assessment, there is margin between the parameter values at normal operating conditions of Rotary Vane Pump volume, amount of U235 and enrichment and the conservative design/analysis values for these parameters assumed for criticality.	LBDCR-10-0012
WSU-251 Roots Pump (Mobile Maintenance Rig)	LOSS OF SAFE BY DESIGN ATTRIBUTE	VOLUME 19.3 liters		Based on qualitative assessment, there is margin between the parameter values at normal operating conditions of Rotary Vane Pump volume, amount of U235 and enrichment and the conservative design/analysis values for these parameters assumed for criticality.	
Mobile Maintenance Rig	LOSS OF SAFE BY DESIGN ATTRIBUTE	PHYSICAL ARRNGMNT See CDS Drawings & Crit. Calc		Based on qualitative assessment, there is margin between the normal operating conditions and the conservative design/analysis conditions assumed for criticality.	

Table 3.7-11 Contingency Dump System

Criticality Assessment of Passive Safe-By-Design Components – ETC4009567				
Component Description (A)	Sequence ID (B)	Safe Design Attribute $k_{eff} < 0.95$ @ 6 wt % (unless physical arrangement) (Design Value, See Note) (C)	Review of Up-Set Conditions to Change Geometry (Applicable HAZOP Guidewords) (D)	Notes/Comments (E)
Upset Conditions				
All			More Heat	Based on qualitative assessment, it is highly unlikely for a process deviation to result in a more heat condition that would adversely affect the maintenance of margin to criticality associated with design and maximum operating parameter values for amount of ^{235}U and enrichment.
All			More Pressure	Based on qualitative assessment, it is highly unlikely for a process deviation to result in a more pressure condition that would adversely affect the maintenance of margin to criticality associated with design and maximum operating parameter values for amount of ^{235}U and enrichment.
All			Corrosion/Erosion	Based on qualitative assessment, it is highly unlikely for a process deviation to result in a corrosion/erosion condition that would affect the maintenance of margin to criticality associated with design and maximum operating parameter values for physical arrangement.
All			Loss of Confinement or Leakage	Based on qualitative assessment, postulated loss of confinement or leakage will not result in any appreciable accumulation of ^{235}U material because of physical limitations of the process (sub-atmospheric). As a result, loss of confinement does not result in a potential for criticality and therefore its consequence is low.
All			Fire	Components are protected from fire to ensure the safe design attribute of physical arrangement is not adversely impacted. The application of IROFS36a and its implementing procedure provides control of transient combustibles, limiting the fire magnitude and location in areas containing uranic material.

LBDCR-10-0037

LBDCR-10-0012

Table 3.7-11 Contingency Dump System

Criticality Assessment of Passive Safe-By-Design Components – ETC4009567				
Component Description (A)	Sequence ID (B)	Safe Design Attribute $k_{eff} < 0.95$ @ 6 wt % (unless physical arrangement) (Design Value, See Note) (C)	Review of Up-Set Conditions to Change Geometry (Applicable HAZOP Guidewords) (D)	Notes/Comments (E)
All			Maintenance	Approved maintenance procedures will be used to ensure that maintenance does not adversely impact the safe design attribute of physical arrangement. Maintenance is part of the generic management measures as described in Section 3.1.8.3 of the ISA Summary.
SBD Components by Physical Arrangement			Impact/Drop	Components are protected from impact/drop where necessary to ensure the safe design attribute of physical arrangement is not adversely impacted. Seismic II/I design criteria apply to support and anchorages of SBD components whose as-designed, safe configuration must be maintained during a design basis earthquake (DBE). Meeting these criteria provides protection from impact/drop due to a bounding event (i.e., DBE).
SBD Components by Physical Arrangement			External Events (Construction on Site)	Bounded by the seismic, tornado missile or impact/drop event in accordance with the ISA Meeting Minutes on Operate While Constructing.
SBD Components by Physical Arrangement			External Events (Failure of Above-Ground Liquid Storage Tanks)	Criticality due to this event is not credible, as it is bounded by local intense precipitation and protection from floods is no longer required as a result of LAR-08-07.
SBD Components by Physical Arrangement			External Events (Hurricane)	Not a design basis event for the NEF site due to its distance from the coast (ISA Summary, Section 3.2.3.4.3)

LBDCR-10-0037

LBDCR-10-0012

Table 3.7-11 Contingency Dump System

Criticality Assessment of Passive Safe-By-Design Components – ETC4009567				
Component Description (A)	Sequence ID (B)	Safe Design Attribute $k_{eff} < 0.95$ @ 6 wt % (unless physical arrangement) (Design Value, See Note) (C)	Review of Up-Set Conditions to Change Geometry (Applicable HAZOP Guidewords) (D)	Notes/Comments (E)
SBD Components by Physical Arrangement			External Events (Seismic)	Components are protected from seismic events where necessary to ensure the safe design attribute of physical arrangement is not adversely impacted. Unless specifically exempted by a nuclear criticality safety evaluation or analysis, SBD components and piping require seismic design to ensure that minimum spacing requirements are maintained in the event of a DBE or damage from a nearby II/I structure, system or component.
SBD Components by Physical Arrangement			External Events (Tornado)	Components are protected from tornado events with the application of IROFS27e to prevent building collapse to ensure the safe design attribute of physical arrangement is not adversely impacted.
SBD Components by Physical Arrangement			External Events (Tornado Missile)	Components are protected from tornado missile events where necessary to ensure the safe design attribute of physical arrangement is not adversely impacted. Unless specifically exempted by a nuclear criticality safety evaluation or analysis, SBD components and piping require tornado missile protection to ensure that minimum spacing requirements are maintained during a tornado event.
SBD Components by Physical Arrangement			External Events (Local Intense Precipitation)	Criticality due to this event is not credible as a result of LAR-08-07. Components are protected from local intense precipitation with the application of IROFS27e to prevent building collapse to ensure the safe design attribute of physical arrangement is not adversely impacted. IROFS27e does not prevent water intrusion. Flooding is included in nuclear criticality safety evaluations and analyses for SBD components and piping located on the first floor to demonstrate non-credibility. Items located on higher floors are not subject to flooding.

LBDCR-10-0037

LBDCR-10-0012

Table 3.7-11 Contingency Dump System

LBDCR-10-0037

Criticality Assessment of Passive Safe-By-Design Components – ETC4009567				
Component Description (A)	Sequence ID (B)	Safe Design Attribute $k_{eff} < 0.95$ @ 6 wt % (unless physical arrangement) (Design Value, See Note) (C)	Review of Up-Set Conditions to Change Geometry (Applicable HAZOP Guidewords) (D)	Notes/Comments (E)
SBD Components by Physical Arrangement			External Events (External Fire)	Components are protected from external fire events with the application of IROFS35 (fire barriers) and IROFS36g (vegetation fire control) to ensure the safe design attribute of physical arrangement is not adversely impacted.
SBD Components by Physical Arrangement			External Events (Snow/Ice)	Components are protected from snow/ice events with the application of IROFS27e to prevent building collapse to ensure the safe design attribute of physical arrangement is not adversely impacted. Water intrusion due to the snow/ice events is bounded by local intense precipitation.
Adherence to Double Contingency Principle				
All				Double Contingency Principle is satisfied as follows: The geometry is controlled such that the components are individually SBD by physical size or jointly SBD by physical arrangement, and no single credible event or failure has been identified that has the potential to adversely impact the safety function of the passive design features. The enrichment is also controlled such that no single credible event or failure could result in loss of enrichment control leading to criticality.

Table 3.7-11 Contingency Dump System

Criticality Assessment of Passive Safe-By-Design Components – ETC4009567				
Component Description (A)	Sequence ID (B)	Safe Design Attribute $k_{eff} < 0.95$ @ 6 wt % (unless physical arrangement) (Design Value, See Note) (C)	Review of Up-Set Conditions to Change Geometry (Applicable HAZOP Guidewords) (D)	Notes/Comments (E)

LBDCR-10-0037

Column Descriptions:

Column A: This column provides a brief description of each component.

Column B: This column identifies the accident sequence associated with the passive component.

Column C: This column identifies the safe design attribute. The design value can be found in ETC4009567. Modeled value in criticality calculation may be more conservative than the design value.

LBDCR-10-0012

Column D: This column identifies the applicable guidewords from the ISA HAZOP procedure that are used to assess the criticality design margin. Additional guidewords are addressed as applicable in the detailed assessment.

Column E: This column provides any notes, comments and concluding statements.

Table 3.7-12a Mobile Feed Sampling Rig				
Criticality Assessment of Passive Safe-By-Design Components				
Component Description (A)	Sequence ID (B)	Safe Design Attribute (C)	Review of Up-Set Conditions to Change Geometry (Applicable HAZOP Guidewords) (D)	Notes/Comments (E)
Mobile Feed Sampling Rig overall configuration	LOSS OF SAFE-BY-DESIGN ATTRIBUTE	**Physical Arrangement** (See Table 3.7-13b) Keff < 0.95 @ 6.0 wt %		Based on qualitative assessment, there is margin between the normal operating conditions and the conservative design/analysis conditions assumed for criticality.
			More Heat	Based on qualitative assessment, it is highly unlikely for a process deviation to result in a more heat condition that would adversely affect the maintenance of margin to criticality associated with design and maximum operating parameter values for amount of ^{235}U and enrichment.
			More Pressure	Based on qualitative assessment, it is highly unlikely for a process deviation to result in a more pressure condition that would adversely affect the maintenance of margin to criticality associated with design and maximum operating parameter values for amount of ^{235}U and enrichment.
			Corrosion/Erosion	Based on qualitative assessment, it is highly unlikely for a process deviation to result in a corrosion/erosion condition that would affect the maintenance of margin to criticality associated with design and maximum operating parameter values for physical arrangement.
			Loss of Confinement or Leakage	Based on qualitative assessment, postulated loss of Mobile Feed Sampling Rig confinement or leakage will not result in any appreciable accumulation of ^{235}U material because of physical limitation of the process (sub-atmospheric) and the size of the sample containers. As a result, loss of confinement does not result in a potential criticality and therefore its consequence is low.
			Fire	Components shall be protected from fire to ensure the critical design attribute of physical arrangement is not adversely impacted.
			Maintenance	Configuration Management shall ensure that maintenance does not adversely impact the critical design attribute of physical arrangement.

LBDCR-09-0138

Table 3.7-12a Mobile Feed Sampling Rig

Criticality Assessment of Passive Safe-By-Design Components

Component Description (A)	Sequence ID (B)	Safe Design Attribute (C)	Review of Up-Set Conditions to Change Geometry (Applicable HAZOP Guidewords) (D)	Notes/Comments (E)
			Impact/Drop	Components shall be protected from impact/drop to ensure the critical design attribute of physical arrangement is not adversely impacted.
			External Events (Construction on Site)	Components shall be protected from construction on-site to ensure the critical design attribute of physical arrangement is not adversely impacted.
			External Events (Failure of Above-Ground Liquid Storage Tanks)	Components shall be protected from external flooding (Failure of Above-Ground Liquid Storage Tanks) to ensure the critical design attribute of physical arrangement is not adversely impacted.
			External Events (Seismic)	Components shall be protected from seismic events to ensure the critical design attribute of physical arrangement is not adversely impacted.
			External Events (External Fire)	Components shall be protected from external fire events to ensure the critical design attribute of physical arrangement is not adversely impacted.
				Double Contingency Principal is satisfied as follows. The geometry is criticality safe and no single credible event or failure has been identified whereby the geometry could become unsafe. The enrichment is also controlled such that no single credible failure could result in loss of enrichment control.

Column Descriptions:
Column A: This column provides a brief description of each component.
Column B: This column identifies the accident sequence associated with the passive component.
Column C: The column identifies the safe design attribute under consideration along with the conservative values used in the criticality analysis.
Column D: This column identifies the applicable guidewords from the ISA HAZOP procedure that are used to assess the criticality design margin. Additional guidewords are addressed as applicable in the detailed assessment.
Column E: This column provides any notes, comments and concluding statements.

LBDCR-09-0138

Table 3.7-12b Safe Design Attributes for Mobile Feed Sampling System	
Physical Dimension	**Dimension Required for SBD (CM)**
Vacuum pump volume	< 18 liters
Pump inlet filter volume	< 18 liters
Pump outlet filter volume	< 18 liters
Mixed-bed trap diameter	< 21.9 cm
Interconnecting piping diameter	< 21.9 cm

LBDCR-09-0138

IROFS will be designed, constructed, tested and maintained to QA Level 1. IROFS will comply with design requirements established by the ISA and the applicable codes and standards (listed in table 3.0-1). IROFS components and their designs will be of proven technology for their intended application. These IROFS components and systems will be qualified to perform their required safety functions under normal and accident conditions for which they are credited, e.g., pressure, temperature, humidity, seismic motion, electromagnetic interference, and radio-frequency interference, as required by the ISA. IROFS components and systems will be qualified using the applicable guidance in Institute of Electrical and Electronics Engineers (IEEE) standard IEEE-323, "IEEE Standard for Qualifying Class 1E Equipment for Nuclear Power Generating Stations". Furthermore, IROFS components and systems will be designed, procured, installed, tested, and maintained using the applicable guidance in Regulatory Guide 1.180, "Guidelines for Evaluating Electromagnetic and Radio-Frequency Interference in Safety-Related Instrumentation and Control Systems,". IROFS systems will be designed and maintained consistent with the reliability assumptions in the ISA. Redundant IROFS systems will be separate and independent from each other. IROFS systems will be designed to be fail-safe. In addition, IROFS systems will be designed such that process control system failures will not affect the ability of the IROFS systems to perform their required safety functions. Plant control systems ~~will not be~~ are not used to perform IROFS functions. Installation of IROFS systems will be in accordance with engineering specifications and manufacturer's recommendations. Required testing and calibration of IROFS will be consistent with the assumptions of the ISA and setpoint calculations, as applicable. For hardware IROFS involving instrumentation which provides automatic prevention or mitigation of events, setpoint calculations are performed in accordance with a setpoint methodology, which is consistent with the applicable guidance provided in Regulatory Guide 1.105, "Setpoints for Safety-Related Instrumentation,". LBDCR-10-0002

In addition, for those IROFS requiring operator actions, a human factors engineering review of the human-system interfaces shall be conducted using the applicable guidance in NUREG-0700, "Human-System Interface Design Review Guidelines," and NUREG-0711, "Human Factors Engineering Program Review Model,".

For IROFS and IROFS with Enhanced Failure Probability Index Numbers (i.e., enhanced IROFS) that require "independent verification" of a safety function, the independent verification shall be independent with respect to personnel and personnel interface. Specifically, a second qualified individual, operating independently (e.g., not at the same time or not at the same location) of the individual assigned the responsibility to perform the required task, shall, as applicable, verify that the required task (i.e., safety function) has been performed correctly (e.g., verify a condition), or re-perform the task (i.e., safety function), and confirm acceptable results before additional action(s) can be taken which potentially negatively impact the safety function of the IROFS. The required task and independent verification shall be implemented by procedure and documented by initials or signatures of the individuals responsible for each task. In addition, the individuals performing the tasks shall be qualified to perform, for the particular system or process (as applicable) involved, the tasks required and shall possess operating knowledge of the particular system or process (as applicable) involved and its relationship to facility safety. The requirements for independent verification are consistent with the applicable guidance provided in ANSI/ANS-3.2.

For an IROFS that is found to be degraded or impaired by planned operations, maintenance, or construction activities; a compensatory measure may be used to ensure that the function of the IROFS is compensated until it is returned to service. For example, a continuous fire watch may be used to compensate for a degraded IROFS barrier. LBDCR-10-0043

(4) Sufficient time is available for the site to detect the event and notify workers to evacuate the area(s) of concern.

3.8.3.45 IROFS45 Basis for Enhanced FPIN

The enhanced (i.e., Index of "-3") administrative control to ensure subcritical geometry, by verifying that the stored cylinders containing enriched uranium in the CRDB and Blending and Liquid Sampling Areas are in a horizontal, co-planar (i.e., non-stacked), condition and that no other cylinder containing enriched uranium is in movement in the associated area, is based on the following factors:

The failure to ensure that the required conditions are met for subcritical geometry will be precluded by independent verification prior to moving a cylinder containing enriched uranium in the CRDB or the Blending and Liquid Sampling Area. This enhancement shall meet the requirements for independent verification identified in Section 3.8.1.

3.8.3.C6 IROFSC6 Basis for Enhanced FPIN

The enhanced (i.e., Index of "-3") administrative control to calculate and set the cascade enrichment control device in accordance with the calculation to ensure ^{235}U enrichment < 5 $^{w}/_{o}$ to ensure subcriticality within the designed process and analyzed activities is based on the following factors:

Exceeding the ^{235}U enrichment license limit of 5 $^{w}/_{o}$ will be precluded by independent verification of the cascade enrichment control device setting calculation prior to changing the cascade enrichment control device setting and independent verification of implementation of the enrichment control device setting within 1 hour after changing the cascade enrichment control setting. This enhancement shall meet the requirements for independent verification identified in Section 3.8.1.

3.8.3.50a IROFS50a Basis for Enhanced FPIN

The enhanced (i.e., Index of "-3") administrative IROFS to control proximity of a site construction vehicle relative to the UBC Storage Pad is based on the use of a physical device (barrier of sufficient strength to alert the operator). However, the index is increased by an order of magnitude for conservitism.

3.8.3.50b IROFS50b Basis for Enhanced FPIN

The enhanced (i.e., Index of "-3") administrative IROFS to control proximity of a site construction vehicle relative to an operating area is based on the use of a physical device (barrier of sufficient strength to alert the operator). However, the index is increased by an order of magnitude for conservitism. LBDCR-10-0044

3.8.3.50c IROFS50c Basis for Enhanced FPIN

The enhanced (i.e., Index "-3") administrative IROFS to control proximity of a site construction vehicle relative to an operating area is based on the use of a physical device (barrier of sufficient strength to alert the operator). However, the index is increased by an order of magnitude for potential dependent failures between IROFS50b and IROFS50c.

3.8.3.50f IROFS50f Basis for Enhanced FPIN

The enhanced (i.e., Index of "-3") administrative IROFS to control proximity of a construction crane relative to an operating area of concern by establishing a construction overhead crane "No Swing Zone," is based on the following factors:

1. Independent verification of the physical demarcation placement for identifying the "No Swing Zone."
2. Designating lifts constrained by "No Swing Zone" as critical lifts and associated critical lift requirements.

LBDCR-10-0044

3.8.3.50h IROFS50h Basis for Enhanced FPIN

The enhanced (i.e., Index of "-3") administrative IROFS to control proximity of a site construction vehicle relative to the UBC Storage Pad is based on the use of a physical device (barrier of sufficient strength to alert the operator). However, the index is increased by an order of magnitude for potential dependent failures betweeb IROFS50a and IROFS50h.

Table 3.8-1 Items Relied On For Safety (IROFS)

IROFS	Accident Sequence	Type of Accident	Type (1)	Class (2)	Description of Safety Function	FPIN (3)	FPIN Basis (4)
IROFS1	TT2-1 UF2-1 PT2-1 *PB2-1 *(See Table 4-3)*	Chemical	AEC	B	Automatic trip of defrost heater and fan on high station internal air temperature to ensure cylinder integrity. This is implemented with a hardwired RTD temperature sensor for automatic, fail-safe, high station internal air temperature trip of defrost heaters and fans at Tails Low Temperature Take-off Stations, Feed Purification Low Temperature Take-off Stations, Product Low Temperature Take-off stations and Product Blending Receiver Stations. Setpoint conservative with respect to assuring cylinder integrity.	-2	N/A
IROFS2	TT2-1 UF2-1 PT2-1 *PB2-1 *(See Table 4-3)*	Chemical	AEC	B	Automatic trip of defrost heater and fan on high station internal air temperature to ensure cylinder integrity. This is implemented with a thermocouple temperature sensor for automatic, hardwired, fail-safe, high station internal air temperature trip (independent and diverse from IROFS1) of defrost heaters and fans at Tails Low Temperature Take-off Stations, Feed Purification Low Temperature Take-off Stations, Product Low Temperature Take-off Stations and Product Blending Receiver Stations. Setpoint conservative with respect to assuring cylinder integrity.	-2	N/A
IROFS3	~~UF3-1~~ ~~PT3-2~~ *PB3-3 *VR1-5 *(See Table 4-3)*	Chemical	AEC	B	Automatic trip of the vacuum pump on carbon trap high weight to ensure the carbon trap does not become saturated with UF_6. This is implemented with an automatic hardwired, fail-safe, trip of the vacuum pump on high weight for evacuation pump sets and the Contingency Dump System. Setpoint conservative with respect to saturated carbon trap weight.	-2	N/A

LBDCR-10-0045

Table 3.8-1 Items Relied On For Safety (IROFS)

IROFS	Accident Sequence	Type of Accident	Type (1)	Class (2)	Description of Safety Function	FPIN (3)	FPIN Basis (4)
IROFS3	*VR1-1 * *(See Table 4-3)*	Criticality	AEC	B	Automatic trip of the vacuum pump on carbon trap high weight to ensure the carbon trap does not become saturated with UF_6. This is implemented with an automatic hardwired, fail-safe, trip of the vacuum pump on high weight of the evacuation skid carbon trap in theVentilated Room Cylinder Pressure Test & Pump Out Rig. Setpoint conservative with respect to saturated carbon trap weight.	-2	N/A
IROFS4	UF1-1 *PB1-1 * *(See Table 4-3)*	Chemical	AEC	B	Automatic trip of station heaters on high station internal air temperature to ensure cylinder integrity. This is implemented with a hardwired RTD temperature sensor for automatic, fail-safe, trip on high station internal air temperature of Solid Feed Station and Blending Donor Station heaters. Setpoint conservative with respect to assuring cylinder integrity.	-2	N/A
IROFS5	UF1-1 *PB1-1 * *(See Table 4-3)*	Chemical	AEC	B	Automatic trip of station heaters on high station internal air temperature to ensure cylinder integrity. This is implemented with a thermocouple temperature sensor for automatic, fail-safe, trip (independent and diverse from IROFS4) on high internal air temperature of Solid Feed Station and Blending Donor Station heaters. Setpoint conservative with respect to assuring cylinder integrity.	-2	N/A
IROFS10	*PB4-1 *PB4-3 * *(See Table 4-3)*	Chemical	PEC	A	Design feature to maintain Product Liquid Sampling Autoclave leak tight integrity. Total autoclave leakage is limited to that assumed in the consequence analyses.	-3	N/A
IROFS10	*PB4-4 * *(See Table 4-3)*	Chemical	PEC	B	Design feature to maintain Product Liquid Sampling Autoclave leak tight integrity. Total autoclave leakage is limited to that assumed in the consequence analyses.	-3	N/A

LBDCR-10-0045

Table 3.8-1 Items Relied On For Safety (IROFS)

IROFS	Accident Sequence	Type of Accident	Type (1)	Class (2)	Description of Safety Function	FPIN (3)	FPIN Basis (4)
IROFS11	*PB4-2 * *(See Table 4-3)*	Chemical	AEC	B	Automatic trip of the autoclave heater and fan on autoclave high internal air temperature to ensure Product Liquid Sampling Autoclave integrity. This is implemented with an automatic fail-safe hardwired temperature sensor for trip (independent from IROFS12) of the heater and fan on high internal air temperature for the Product Liquid Sampling Autoclave integrity. Setpoint conservative with respect to assuring cylinder and autoclave integrity.	-2	N/A
IROFS12	*PB4-2 * *(See Table 4-3)*	Chemical	AEC	B	Automatic trip of the autoclave heater and fan on autoclave high internal air pressure to ensure Product Liquid Sampling Autoclave integrity. This is implemented with an automatic fail-safe hardwired pressure sensor for trip (independent of IROFS11) of the heater and fan on high air pressure for the Product Liquid Sampling Autoclave integrity. Setpoint conservative with respect to assuring autoclave integrity.	-2	N/A
IROFS14a	*FR1-1 *FR2-1 *DS1-1 *DS2-1 *DS3-1 *SW1-1 *LW1-2 † TVR1-2 * *(See Table 4-3)* ~~† TVR1-2~~ † *(See Table 4-4)*	Criticality	AC	A	Administratively restrict proximity of vessels in non-designed locations containing enriched uranic material to ensure subcritical configuration. This is implemented by verifying the use of a safe-by-design transfer frame prior to movement of the associated waste container containing enriched uranic material. The proximity limit, enforced by the safe-by-design transfer frame, is based on assumptions in the Nuclear Criticality Safety Analyses. If the acceptance criterion is not met, then the associated waste container shall not be moved.	-3	3.8.3.14a

LBDCR-10-0007

LBDCR-10-0045

Table 3.8-1 Items Relied On For Safety (IROFS)

IROFS	Accident Sequence	Type of Accident	Type (1)	Class (2)	Description of Safety Function	FPIN (3)	FPIN Basis (4)
IROFS14b	*FR1-2 *FR2-2 *DS1-2 *DS2-2 *DS3-2 *SW1-2 *LW1-3 †TVR1-3 * *(See Table 4-3)* ~~‡ TVR1-3~~ † *(See Table 4-4)*	Criticality	AC	A	Administratively restrict proximity of vessels in non-designed locations containing enriched uranic material to ensure subcritical configuration. This is implemented by verifying, prior to moving a waste container containing enriched uranic material within 180 cm of the associated storage array, the associated storage array condition is acceptable for storing the associated waste container (i.e., the storage array is the correct array for storage of the associated waste container, no component containing enriched uranic material is stored within 180 cm of the storage array (except in storage array locations), components are correctly stored in the array, and a vacant location is available for storage of the associated waste container) and no component containing enriched uranic material is in movement n the designated area. If the acceptance criteria are not met, then the associated waste container containing enrich uranic material shall not be moved.	-3	3.8.3.14b
IROFS15	*PT3-5 *(See Table 4-3)	Criticality	AC	A	Administratively restrict an independent parameter of the criticality sequence to ensure subcritical configuration by preventing additional transfer of enriched uranic material to another container if that container contains enriched uranic material and is a non-safe-by-design container. This will be implemented by establishing controls independent from other IROFS in applicable accident sequences. Specifically, IROFS15 will require verification that the associated container, into which enriched uranic material will be transferred, either contains no enriched uranic material or is a safe-by-design container prior to the transfer of the enriched uranic material into a container. If the acceptance criteria are not met, then the transfer of the enriched uranic material to the container shall not be initiated.	-3	3.8.3.15

LBDCR-10-0007

LBDCR-10-0045

Table 3.8-1 Items Relied On For Safety (IROFS)

IROFS	Accident Sequence	Type of Accident	Type (1)	Class (2)	Description of Safety Function	FPIN (3)	FPIN Basis (4)
IROFS16a	*PB2-2 CP1-2 * *(See Table 4-3)*	Criticality	AC	A	Administratively limit moderator mass (oil and water) in cylinders containing enriched uranic material to ensure subcriticality by allowing no visible oil and by limiting cylinder vapor pressure. This is implemented by allowing no visible oil and by limiting cylinder vapor pressure prior to introducing product, which is based on moderator limitations in the Nuclear Criticality Safety Analyses for product and receiver cylinders. If the acceptance criteria are not met, then product shall not be introduced into the associated cylinder.	-3	3.8.3.16a
IROFS19a	*DS1-3 *DS2-3 *LW1-1 *LW2-1 *LW3-1 *LW5-1 * *(See Table 4-3)*	Criticality	AC	B	Administratively limit the calculated tank uranic mass inventory to ensure a subcritical mass using bookkeeping procedures. This is implemented by bookkeeping procedures to limit calculated uranic mass to that assumed in the Nuclear Criticality Safety Analyses for the following Equipment Decontamination and Liquid Effluent Collection and Treatment Systems tanks: degreaser, citric acid, rinse water (2), spent citric acid, degreaser water collection, miscellaneous effluent collection, and the precipitation treatment. The calculated tank uranic mass inventory shall be determined using bookkeeping procedures prior to transfer of enriched uranic material to the associated tank. If the acceptance criterion is not met, then the enriched uranic material shall not be transferred to the associated tank.	-2	N/A

LBDCR-10-0045

Table 3.8-1 Items Relied On For Safety (IROFS)

IROFS	Accident Sequence	Type of Accident	Type (1)	Class (2)	Description of Safety Function	FPIN (3)	FPIN Basis (4)
IROFS19c	*DS1-3 *DS2-3 *LW1-1 *LW2-1 *LW3-1 *LW5-1 *(See Table 4-3)*	Criticality	AC	N/A	Administratively limit measured tank uranic mass inventory to ensure a subcritical mass by performing independent sampling and measurement. This is implemented by independent sampling and measurement, prior to transfer of enriched uranic material to the associated tank, to limit tank uranic mass to that assumed in the Nuclear Criticality Safety Analyses for the following Equipment Decontamination and Liquid Effluent Collection and Treatment Systems tanks: degreaser, citric acid, rinse water (2), spent citric acid, degreaser water collection, miscellaneous effluent collection, and the precipitation treatment. IROFS19c is independent of IROFS19d. If the acceptance criterion is not met, then enriched uranic material shall not be transferred to the associated tank.	N/A	N/A
IROFS19d	*DS1-3 *DS2-3 *LW1-1 *LW2-1 *LW3-1 *LW5-1 *(See Table 4-3)*	Criticality	AC	B	Administratively limit measured tank uranic mass inventory to ensure a subcritical mass by performing independent sampling and measurement. This is implemented by independent sampling and measurement, prior to transfer of enriched uranic material to the associated tank, to limit tank uranic mass to that assumed in the Nuclear Criticality Safety Analyses for the following Equipment Decontamination and Liquid Effluent Collection and Treatment Systems tanks: degreaser, citric acid, rinse water (2), spent citric acid, degreaser water collection, miscellaneous effluent collection, and the precipitation treatment. IROFS19d is independent of IROFS19c. If the acceptance criterion is not met, then enriched uranic material shall not be transferred to the associated tank.	-2	N/A

LBDCR-10-0045

Table 3.8-1 Items Relied On For Safety (IROFS)

IROFS	Accident Sequence	Type of Accident	Type (1)	Class (2)	Description of Safety Function	FPIN (3)	FPIN Basis (4)
IROFS20	*CL3-1 * *(See Table 4-3)*	Criticality	AEC	B	Automatic isolation of cold trap on cold trap high temperature to ensure no more than a subcritical mass deposited on the CRDB GEVS filter. This is implemented with an automatic hardwired, fail-safe, high temperature sensor that will close the Cold Trap No. 2 Valve, which is in line to the sub-sampling rig vacuum pump. This will prevent potential flow of UF_6 product to the CRDB GEVS in the event that the associated UF_6 cold trap is above a conservative desublimation temperature. Setpoint conservative with respect to assuring desublimation temperature.	-2	N/A
IROFS21	*VR1-1 *VR1-2 *CL3-1 * *(See Table 4-3)*	Criticality	AEC	B	Automatic trip of the CRDB GEVS on ^{235}U selective high-high gamma to ensure no more than a subcritical mass deposited on the filter. Upon detection of ^{235}U selective high-high gamma levels in the CRDB GEVS filter by hardwired, fail-safe, instrumentation, the CRDB GEVS trips. Setpoint conservative with respect to assuring critical mass as determined from Nuclear Criticality Safety Analyses.	-2	N/A
IROFS22	*VR1-2 * *(See Table 4-3)*	Criticality	AEC	B	Automatic trip of the vacuum pump on carbon trap high temperature to ensure the carbon trap does not pass excessive UF_6. This is implemented with an automatic hardwired, fail-safe, trip of the Ventilated Room evacuation skid vacuum pump on carbon trap high temperature. Setpoint conservative with respect to temperatures that reflect excessive UF_6 flowrate.	-2	N/A

LBDCR-10-0045

LBDCR-10-0045

Table 3.8-1 Items Relied On For Safety (IROFS)

IROFS	Accident Sequence	Type of Accident	Type (1)	Class (2)	Description of Safety Function	FPIN (3)	FPIN Basis (4)
IROFS23a	*VR1-3 * *(See Table 4-3)*	Chemical	AC	A	Administrative use of personal respiratory protection to ensure that inhalation of uranic material and HF consequences are low. This is implemented through the use of personal respiratory protection when performing positive pressure testing of UF_6 cylinder after repair/replacement of a leaking cylinder component such that assumptions of the consequence analysis are maintained. If personnel respiratory protection is not used, then the positive pressure test of the UF_6 cylinder shall not be performed.	-3	3.8.3.23a
IROFS23b	*VR2-1 * *(See Table 4-3)*	Chemical	AC	A	Administrative use of personal respiratory protection to ensure that inhalation of uranic material consequence is low. This is implemented through the use of personal respiratory protection when handling carbon trap material containing uranic material, such that assumptions in the consequence analyses are maintained. If personnel respiratory protection is not used, then carbon trap material containing uranic material shall not be handled.	-2	N/A
IROFS23b	*VR2-2 * *(See Table 4-3)*	Chemical	AC	B	Administrative use of personal respiratory protection to ensure that inhalation of uranic material consequence is low. This is implemented through the use of personal respiratory protection when handling sodium fluoride (NaF) trap material containing Uranic material such that assumptions in the consequence analyses are maintained. If personnel respiratory protection is not used, then NaF trap material containing uranic material shall not be handled.	-2	N/A

LBDCR-10-0045

Table 3.8-1 Items Relied On For Safety (IROFS)

IROFS	Accident Sequence	Type of Accident	Type (1)	Class (2)	Description of Safety Function	FPIN (3)	FPIN Basis (4)
IROFS24a	*VR2-2 * *(See Table 4-3)*	Chemical	AC	B	Administrative establishment of airflow away from the worker to ensure inhalation of uranic material consequences are low. This is implemented through the use of the CRDB GEVS connected to the assembly when handling sodium fluoride (NaF) trap material containing uranic material. The CRDB GEVS shall be operating during this operation, consistent with assumption of the consequence calculation. If airflow away from the worker is not established, then NaF trap material containing uranic material shall not be handled.	-2	N/A
IROFS24b	*CL3-2 *CL3-3 * *(See Table 4-3)*	Chemical	AC	B	Administrative establishment of airflow away from the worker to ensure inhalation of uranic material and HF consequences are low. This is implemented through CRDB GEVS connected to Chemical Lab Hood when UF_6 Sub-sampling Unit is operated during transfer of product samples for assay analysis or during heating of a sample bottle(s) within the UF_6 Sub-sampling Unit. The CRDB GEVS shall be operating during this operation, consistent with assumption of the consequence calculation. If airflow away from the worker is not established, then transfer of product samples shall not be initiated and sample bottle(s) in the UF_6 Sub-sampling Unit shall not be heated.	-2	N/A
IROFS27a IROFS27b	*EE-LP-CRDB Bunker (CR) * *(See Table 4-3)*	Criticality	PEC	B	Design feature of buildings (excluding the SBMs) containing enriched uranic material for roof ponding and site flooding due to local intense precipitation, to ensure associated building area subcriticality. This is implemented by designing the building structures (IROFS27a and IROFS27b are required to be independent passive design features) to withstand the effects of local intense precipitation, thus ensuring lack of moderation consistent with the assumptions in the Nuclear Criticality Analyses.	-3	N/A

LBDCR-10-0045

Table 3.8-1 Items Relied On For Safety (IROFS)

IROFS	Accident Sequence	Type of Accident	Type (1)	Class (2)	Description of Safety Function	FPIN (3)	FPIN Basis (4)
IROFS27c	*EE-TORNADO, TORNADO MISSILE, & HIGH WIND-CRDB BUNKER (T) *EE-SNOW-CRDB BUNKER (T) *EE-LP-CRDB BUNKER (T) *EE-SEISMIC-CRDB BUNKER (T) *(See Table 4-3)*	Chemical	PEC	A	Design feature of buildings (excluding the SBMs) containing UF_6 process systems for seismic, tornado, tornado missile, high wind, roof snow load, and for roof ponding and site flooding due to local intense precipitation, to ensure UF_6 process systems integrity. This is implemented by designing the building structures to withstand the effects of seismic, tornado, tornado missile, high wind, roof snow load, and local intense precipitation, consistent with the assumptions in the bases for the consequence calculations.	-3	N/A

LBDCR-10-0045

Table 3.8-1 Items Relied On For Safety (IROFS)

IROFS	Accident Sequence	Type of Accident	Type (1)	Class (2)	Description of Safety Function	FPIN (3)	FPIN Basis (4)
IROFS27e	*EE-SNOW-SBM-CRDB SHELL (T) *EE-LP-SBM-CRDB SHELL (T) *EE-TORNADO & HIGH WIND – SBM – CRDB SHELL (T) *EE-SEISMIC – CRDB SHELL (T) *(See Table 4-3)*	Chemical	PEC	A	Design feature of SBMs and the CRDB superstructure (not including the Bunkered Area) for seismic, tornado, high wind, roof snow load, roof ponding and site flooding due to local intense precipitation, to ensure a chemical release does not exceed the 10 CFR 70.61 performance requirements. This is implemented by designing the building structures to withstand the effects of seismic, tornado, high wind, roof snow load, and local intense precipitation, consistent with the assumptions in the bases for the consequence calculations.	-3	N/A
IROFS27e	EE-SEISMIC-SBM	Chemical	PEC	B	Design feature of SBMs and the CRDB superstructure (not including the Bunkered Area) for seismic, tornado, high wind, roof snow load, roof ponding and site flooding due to local intense precipitation, to ensure a chemical release does not exceed the 10 CFR 70.61 performance requirements. This is implemented by designing the building structures to withstand the effects of seismic, tornado, high wind, roof snow load, and local intense precipitation, consistent with the assumptions in the bases for the consequence calculations.	-3	N/A

LBDCR-10-0045

Table 3.8-1 Items Relied On For Safety (IROFS)

IROFS	Accident Sequence	Type of Accident	Type (1)	Class (2)	Description of Safety Function	FPIN (3)	FPIN Basis (4)
IROFS28	*EE-TORNADO-MISSILE-SBM-PUBLIC *(See Table 4-3)*	Chemical	PEC	A	Design feature to maintain Product Liquid Sampling Autoclave leak tight integrity. This is implemented by providing a seismic design and tornado missile design of the Product Liquid Sampling Autoclave such that post-event total autoclave leakage is limited to that assumed in the consequence analyses.	-3	N/A
IROFS28	*EE-SEISMIC-SBM	Chemical	PEC	B	Design feature to maintain Product Liquid Sampling Autoclave Leak tight integrity This is implemented by providing a seismic design and tornado missile design of the Product Liquid Sampling Autoclave such that post-event total autoclave leakage is limited to that assumed in the consequence analyses.	-3	N/A
IROFS30a	PT2-5 *PB2-6 *(See Table 4-3)*	Criticality	AC	N/A	Administratively limit hydrocarbon oil (moderator mass) in enriched uranium product to ensure moderation control assumptions are maintained by controlling the type of oil used in process vacuum pumps. This is implemented by controlling the type of oil used in all process vacuum pumps to only perfluorinated polyether (PFPE) oil, consistent with moderation assumptions in the Nuclear Criticality Safety Analyses. If the acceptance criterion are not met, then action shall be initiated to remove the associated vacuum pumps from process systems.	N/A	N/A

LBDCR-10-0045

Table 3.8-1 Items Relied On For Safety (IROFS)

IROFS	Accident Sequence	Type of Accident	Type (1)	Class (2)	Description of Safety Function	FPIN (3)	FPIN Basis (4)
IROFS30b	PT2-5 *PB2-6 * *(See Table 4-3)*	Criticality	AC	B	Administratively limit hydrocarbon oil (moderator mass) in enriched uranium product to ensure moderation control assumptions are maintained by verifying, through test prior to addition of oil, that process vacuum pump oil is not hydrocarbon oil. This is implemented by testing the oil prior to addition to any process vacuum pump to verify the oil is not hydrocarbon oil, consistent with moderation assumptions in the Nuclear Criticality Safety Analyses. If the acceptance criteria are not met, then the associated oil shall not be added to the process vacuum pump.	-2	N/A
IROFS30c	PT2-5 *PB2-6 * *(See Table 4-3)*	Criticality	AC	B	Administratively limit hydrocarbon oil (moderator mass) in enriched uranium product to ensure moderation control assumptions are maintained by verifying, through test (after oil addition) prior to placing vacuum pumps in process system, that process vacuum pump oil is not hydrocarbon oil. This is implemented by testing the oil in all process vacuum pumps for hydrocarbons after bench testing, but before placing vacuum pumps in process systems to verify lack of hydrocarbon oil. This assures operation consistent with moderation assumptions in the Nuclear Criticality Safety Analyses. If the acceptance criteria are not met, then the associated vacuum pump shall not be placed in the process system.	-2	N/A

LBDCR-10-0045

Table 3.8-1 Items Relied On For Safety (IROFS)

IROFS	Accident Sequence	Type of Accident	Type (1)	Class (2)	Description of Safety Function	FPIN (3)	FPIN Basis (4)	
IROFS31a	*VR2-7 †TVR1-1 * *(See Table 4-3)* ~~†TVR1-1~~ *†(See Table 4-4)*	Criticality	AC	N/A	Administratively limit ^{235}U mass in non-safe-by-design solid waste containers to ensure subcriticality by performing independent sampling and assay analysis. This is implemented by independent sampling and assay analysis of waste container contents for ^{235}U mass and limiting mass to that assumed in the Nuclear Criticality Safety Analyses before enriched uranic material is transferred and bulk stored in solid waste containers. IROFS31a is independent of IROFS31b. If the acceptance criterion is not met, then enriched uranic material shall not be transferred and bulk stored in solid waste containers.	N/A	N/A	LBDCR-10-0045 LBDCR-10-0007
IROFS31b	*VR2-7 †TVR1-1 * *(See Table 4-3)* ~~†TVR1-1~~ *† (See Table 4-4)*	Criticality	AC	B	Administratively limit ^{235}U mass in non-safe-by-design solid waste containers to ensure subcriticality by performing independent sampling and assay analysis. This is implemented by independent sampling and assay analysis of waste container contents for ^{235}U mass and limiting mass to that assumed in the Nuclear Criticality Safety Analyses before enriched uranic material is transferred and bulk stored in solid waste containers. IROFS31b is independent of IROFS31a. If the acceptance criterion is not met, then enriched uranic material shall not be transferred and bulk stored in solid waste containers.	-2	N/A	LBDCR-10-0045 LBDCR-10-0007

Table 3.8-1 Items Relied On For Safety (IROFS)

IROFS	Accident Sequence	Type of Accident	Type (1)	Class (2)	Description of Safety Function	FPIN (3)	FPIN Basis (4)
IROFS31c	*VR2-7 †TVR1-1 * *(See Table 4-3)* ~~†TVR1-1~~ †(See Table 4-4)	Criticality	AC	B	Administratively limit ^{235}U mass in non-safe-by-design solid waste containers to ensure subcriticality using bookkeeping procedures. This is implemented by bookkeeping procedures to limit calculated uranic mass in solid waste containers to that assumed in the Nuclear Criticality Safety Analyses for solid waste bulking operations. The calculated ^{235}U mass in solid waste containers shall be determined using bookkeeping procedures before enriched uranic material is transferred and bulk stored in solid waste containers. If the acceptance criterion is not met, then enriched uranic material shall not be transferred and bulk stored in solid waster containers.	-2	N/A
IROFS35	FF6-1 FF15-1 *FF24-1 **(See Table 4-3)*	Chemical	AEC	A	Automatic closure of fire-rated barrier opening protectives (e.g., doors, dampers, penetration seals) to ensure the integrity of area fire barriers prevents fires from propagating into areas containing uranic material. Barriers and protectives will be closed or self-closing (e.g., utilizing fusible links).	-3	3.8.3.35
IROFS36a	FF6-2 FF16-1 FF16-2 FF-WORKER EVAC	Chemical	AC	A	Administratively limit transient combustible loading in areas containing uranic material to ensure integrity of uranic material components/containers and limit the quantity of uranic material at risk to ensure consequences to the public are low. Transients will be controlled to limit aggregate combustible load (transient and in-situ) in the area of concern.	-3	3.8.3.36a
IROFS36c	FF7-1 FF42-1	Chemical	AC	A	Administratively limit onsite UF_6 cylinder transporters/movers to ensure only use of electric drive or diesel powered with a fuel capacity of less than 280 L (74 gal).	-3	3.8.3.36c

LBDCR-10-0045

Table 3.8-1 Items Relied On For Safety (IROFS)

IROFS	Accident Sequence	Type of Accident	Type (1)	Class (2)	Description of Safety Function	FPIN (3)	FPIN Basis (4)	
IROFS36d	*FF25-1 *FF25-2 FF-WORKER EVAC * *(See Table 4-3)*	Chemical	AC	A	Administratively limit transient combustible loading in areas containing uranic material to ensure integrity of uranic material components/containers and limit the quantity of uranic material at risk to ensure consequences to the public are low. Transients will be controlled to limit aggregate combustible load (transient and in-situ) in the area of concern. Liquid and solid waste transfer and packing containers (except as noted below) are limited to metal only. Transfer and packing container restriction does not apply to packaging within these containers (e.g., plastic liners), to bags for transporting contaminated protective clothing and similar non- or low-contamination solids, or to laboratory size sample containers (required for maintaining sample purity).	-3	3.8.3.36d	LBDCR-10-0045
IROFS36e	*FF43-1 *(See Table 4-3)	Chemical	AC	A	Administratively limit transient combustible loading on the UBC Storage Pad to ensure cylinder integrity. This is implemented by limiting vehicles allowed onto the pad to cylinder movers and essential vehicles with a fuel capacity limit of less than 280 L (74 gal) and maintaining storage pad drain-off to ensure no excessive fuel pooling.	-3	3.8.3.36e	
IROFS36f	FF43-2	Chemical	AC	A	Administratively limit designated routes for bulk fueling vehicles onsite to ensure UBC cylinder integrity. This is implemented by limiting diesel fuel deliveries to designated routes. Diesel fuel delivery vehicles will be prohibited from entering the UBC Storage Pad perimeter road.	-3	3.8.3.36f	
IROFS36g	FF44-1	Chemical	AC	A	Administratively limit onsite vegetation fire sources to ensure integrity of important targets. This is implemented by requiring clear cutting of vegetation onsite proximate to buildings and cylinders containing uranic material.	-3	3.8.3.36g	LBDCR-10-0045

Table 3.8-1 Items Relied On For Safety (IROFS)

IROFS	Accident Sequence	Type of Accident	Type (1)	Class (2)	Description of Safety Function	FPIN (3)	FPIN Basis (4)	
IROFS36i	FF-WORKER EVAC-CAB	Chemical	AC	B	Administratively limit transient combustible loading in areas containing uranic material to ensure integrity of uranic material components/containers and limit the quantity of uranic material at risk to ensure consequences to the worker are not high. Transients will be controlled to limit aggregate combustible load (transient and in-situ) in the area of concern.	-3	3.8.3.36i	LBDCR-09-0016 LBDCR-10-0045
IROFS37	*FF25-2 *(See Table 4-3)*	Chemical	AEC	A	Automatic hardwired, fail-safe, trip of the Ventilated Room HVAC and isolation from CRDBGEVS on smoke detection and Ventilated Room design leakage limited to ensure offsite exposure from building out flow maintains consequences to the public low.	-2	N/A	
IROFS38	TT2-2 UF2-2 PT2-4 *PB2-4 *(See Table 4-3)*	Chemical	AC	A	Administratively limit the cylinder fill mass to ensure cylinder integrity. This is implemented at Tails Low Temperature Take-off Stations, Feed Purification Low Temperature Take-off Stations, Product Low Temperature Take-off Stations, and Product Blending Receiver Stations by verifying that cylinder weight is within specified trending limits once per shift during filling of the cylinder. Weight limit conservative with respect to assuring cylinder integrity. If the acceptance criterion is not met, then fill of the associated cylinder shall be terminated.	-3	3.8.3.38	
IROFS39a	EE-SEISMIC-WORKER EVAC – CAB	Chemical	AC	A	Administratively limit exposure by requiring worker action to evacuate the area(s) of concern to ensure worker consequences of inhalation of uranic material and HF are low. This is implemented by worker evacuation from area(s) of concern in the event of a seismic event consistent with assumptions of the consequence analyses.	-2	N/A	LBDCR-10-0045

Table 3.8-1 Items Relied On For Safety (IROFS)

IROFS	Accident Sequence	Type of Accident	Type (1)	Class (2)	Description of Safety Function	FPIN (3)	FPIN Basis (4)
IROFS39a	EE-SEISMIC-WORKER EVAC	Chemical	AC	A	Administratively limit exposure by requiring worker action to evacuate the area(s) of concern to ensure worker consequences of inhalation of uranic material and HF are low. This is implemented by worker evacuation from area(s) of concern in the event of a seismic event consistent with assumptions of the consequence analyses.	-3	3.8.3.39a
IROFS39b	FF-WORKER EVAC-CAB	Chemical	AC	A	Administratively limit exposure by requiring worker action to evacuate the area(s) of concern to ensure worker consequences of inhalation of uranic material and HF are low. This is implemented by worker evacuation from area(s) of concern in the event of a fire consistent with assumptions of the consequence analyses	-2	N/A
IROFS39b	FF-WORKER EVAC	Chemical	AC	B	Administratively limit exposure by requiring worker action to evacuate the area(s) of concern to ensure worker consequences of inhalation of uranic material and HF are low. This is implemented by worker evacuation from area(s) of concern in the event of a fire consistent with assumptions of the consequence analyses.	-2	N/A
IROFS39c	CHEM RELEASE-WORKER EVAC	Chemical	AC	A	Administratively limit exposure by requiring worker action to evacuate the area(s) of concern to ensure worker consequences of inhalation of uranic material and HF are low. This is implemented by worker evacuation from area(s) of concern in the event of a release consistent with assumptions of the consequence analyses.	-3	3.8.3.39c
IROFS39c	CHEM RELEASE – WORKER EVAC – CAB	Chemical	AC	A	Administratively limit exposure by requiring worker action to evacuate the area(s) of concern to ensure worker consequences of inhalation of uranic material and HF are low. This is implemented by worker evacuation from area(s) of concern in the event of a release consistent with assumptions of the consequence analyses.	-2	N/A

LBDCR-10-0045

Table 3.8-1 Items Relied On For Safety (IROFS)

IROFS	Accident Sequence	Type of Accident	Type (1)	Class (2)	Description of Safety Function	FPIN (3)	FPIN Basis (4)
IROFS39d	EE-CHEM RELEASE-WORKER EVAC-CAB EE-TORNADO MISSILE-SBM-CRDB SHELL & BUNKER WORKER	Chemical	AC	A	Administratively limit exposure by requiring worker action to evacuate the area(s) of concern to ensure worker consequences of inhalation of uranic material and HF are low. This is implemented by worker evacuation from area(s) of concern in the event of severe weather consistent with assumptions of the consequence analyses.	-3	3.8.3.39d~~9~~. LBDCR-10-0011 LBDCR-10-0045
IROFS41	EE-SEISMIC-SBM	Chemical	PEC	B	Design features to ensure cascade system pipe leak integrity. This is implemented by design considerations applied to the Cascade Halls Area that require piping integrity during a seismic event and limiting piping leakage to outside areas to ensure offsite exposure during a seismic event maintains consequences to the public low.	-3	N/A
IROFS42	*PB4-4 * *(See Table 4-3)*	Chemical	AC	B LBDCR-10-0045	Administratively limit the cylinder fill mass to ensure cylinder integrity. This is implemented by determining the weight of product cylinders before placement and heating in the Product Liquid Sampling Autoclave. Weight limit conservative with respect to assuring cylinder integrity. If the acceptance criterion is not met, then the associated product cylinder shall not be heated.	-2	N/A
IROFS43	*CL3-3 * *(See Table 4-3)*	Chemical	AEC	B	Automatic trip of UF_6 sub-sampling unit hotbox heater on high hotbox internal temperature to ensure sample bottle integrity. This is implemented with a temperature switch for automatic, hardwired, fail-safe, high temperature trip of hotbox heater at UF_6 sub-sampling unit. Setpoint conservative with respect to assuring sample bottle integrity.	-2	N/A

Table 3.8-1 Items Relied On For Safety (IROFS)

IROFS	Accident Sequence	Type of Accident	Type (1)	Class (2)	Description of Safety Function	FPIN (3)	FPIN Basis (4)	
IROFS50a	*OC1-1 *(See Table 4-3)	Chemical	AC	B	Administratively control proximity of site preparations vehicles around the UBC Storage Pad to prevent a fire from an impact with UBCs resulting in a release of UF_6. This is implemented by establishing a temporary barrier of sufficient strength to alert the vehicle operator upon impact with the barrier. The barrier is placed at a minimum distance of 30 feet from the cylinders on the UBC Storage Pad to allow the vehicle operator sufficient distance to stop or alter course prior to reaching the cylinders on the UBC Storage Pad.	-2	3.8.3.50a	LBDCR-10-0045 LBDCR-10-0044
IROFS50b	OC2-1	Chemical	AC	B	Administratively control proximity of external site preparations vehicles around areas of concern to prevent an impact with areas of conern resulting in a release of UF_6. This is implemented by establishing a temporary barrier of sufficient strength to alert the vehicle operator upon impact with the barrier. The barrier is placed at a minimum distance of 30 feet from areas of concern to allow the vehicle operator sufficient distance to stop or alter course prior to reaching the areas of concern.	-2	3.8.3.50b	
IROFS50c	OC2-1	Chemical	AC	B	Administratively control proximity of external site preparations vehicles around areas of concern to prevent an impact with areas of concern resulting in a release of UF_6. This is implemented by establishing a second and independent temporary barrier of sufficient strength to alert the vehicle operator upon impact with the barrier. The barrier is placed at a minimum distance of 30 feet from the area of concern to allow the vehicle operator sufficient distance to stop or alter course prior to reaching areas of concern.	-2	3.8.3.50c	LBDCR-10-0044

Table 3.8-1 Items Relied On For Safety (IROFS)

IROFS	Accident Sequence	Type of Accident	Type (1)	Class (2)	Description of Safety Function	FPIN (3)	FPIN Basis (4)
IROFS50d	OC3-1	Chemical	AC	B	Administratively control proximity of internal construction vehicles relative to operating process equipment of concern to prevent a release of UF_6 associated with an impact. This is implemented by establishing an appropriate barrier to alter the operator of proximity to operating process equipment of concern.	-2	N/A
IROFS50e	OC3-1	Chemical	AC	B	Administratively control movement of internal construction vehicles to prevent impact with operating process equipment of concern resulting in a release of UF_6. This is implemented by requiring the use of a spotter to independently monitor and supervise internal construction vehicle movement relative to the operating process equipment of concern.	-1	N/A
IROFS50f	OC4-1	Chemical	AC	B	Administratively control proximity of external construction cranes around the areas of concern to prevent a release of UF_6. This is implemented by establishing a No Swing Zone when the crane is closer than a safe distance from an operating area of concern.	-3	3.8.3.50f
IROFS50g	OC4-1	Chemical	AC	B	Administratively control movement of external construction cranes around the areas of concern to prevent a release of UF_6. This is implemented by requiring the use of a spotter to independently monitor and supervise external construction crane movement relative to the operating area of concern.	-1	N/A

~~5.(Approved per CC-EG-2009-0291) A weigh station will be is located in the UF_6 Handling Area for Initial Plant Operations. Upon commencement of Production Phase 1 Operations, the weigh scale in the CRDB will be is functional and the one in the SBM will be is removed.~~ LBDCR-10-0002 LBDCR-10-0033

Table 3.8-1 Items Relied On For Safety (IROFS)

IROFS	Accident Sequence	Type of Accident	Type (1)	Class (2)	Description of Safety Function	FPIN (3)	FPIN Basis (4)	
IROFS50f h	OC1-1	Chemical	AC	B	Administratively control proximity of site preparations vehicles around the UBC Storage Pad to prevent a fire from an impact with UBCs resulting in a release of UF_6. This is implemented by establishing a second and independent temporary barrier of sufficient strength to alert the vehicle operator upon impact with the barrier. The barrier is placed at a minimum distance of 30 feet from the cylinders on the UBC Storage Pad to allow the vehicle operator sufficient distance to stop or alter course prior to reaching the cylinder on the UBC Storage Pad.	-2	3.8.3.50h	LBDCR-10-0045 LBDCR-10-0044

Notes:

1. Type of IROFS:
   - PEC - Passive Engineered Control: A device that uses only fixed physical design features to maintain safe process conditions without any required human action.
   - AEC - Active Engineered Control: A physical device that uses active sensors, electrical components, or moving parts to maintain safe process conditions without any required human action.
   - AC - Administrative Control: A procedural human action that is prohibited or required to maintain safe process conditions.
2. Class of IROFS
   - "A" – Sole IROFS. Refer to Section 3.8.2 and Table 3.8-2.
   - "B" – An IROFS which is one of two preventative or mitgative IROFS for the identified sequence(s). Refer to the applicable accident sequences in Table 3.7-2 or Table 3.7-4 for identification of other IROFS relied upon.
   - "N/A" –IROFS is not expressly associated with a preventive or mitigative control for the identified sequence(s).
3. FPIN – Failure Probability Index Numbers from ISA, based on Risk Indexing Methodology described in Section 3.1. When IROFS is not expressly associated with a preventive or mitigative control for the identified sequence(s). "N/A is specified. Refer to the applicable accident sequence description in Table 3.7-2 or Table 3.7-4 for initating event frequency index number.
4. Section referenced provides basis for IROFS Type AC that is considered "enhanced" and for IROFS Type AEC that is considered to have "high availability." "N/A" indicates that the FPIN reflects the lower absolute value norminally assigned to the Type of IROFS as indicated in Table 3.1-10 that is supported by the general Management Measures applicable to all IROFS (refer to Section 3.1.8.3).

LBDCR-10-0006

Table 3.8-2 Sole Items Relied On For Safety (IROFS)

IROFS Identifier	Accident Sequence	Type of Accident	Type of IROFS	Title	
IROFS10	PB4-1 PB4-3	Chemical	PEC	Design feature to maintain Product Liquid Sampling Autoclave leak tight integrity.	
IROFS14a	FR1-1 FR2-1 DS1-1 DS2-1 DS3-1 SW1-1 LW1-2 †TVR1-2 ‡~~(See Table 4-4)~~	Criticality	AC	Administratively restrict proximity of vessels in non-designed locations containing enriched uranic material to ensure subcritical configuration.	LBDCR-10-0045 LBDCR-10-0007
IROFS14b	FR1-2 DS1-2 DS2-2 DS3-2 SW1-2 LW1-3 †TVR1-3 ‡~~(See Table 4-4)~~	Criticality	AC	Administratively restrict proximity of vessels in non-designed locations containing enriched uranic material to ensure subcritical configuration.	LBDCR-10-0045
IROFS15	PT3-5	Criticality	AC	Administratively restrict an independent parameter of the criticality sequence to ensure subcriticality configuration by preventing additional transfer of enriched uranic material to another container if that container contains enriched uranic material and is a non-safe-by-design container.	
IROFS16a	PB2-2 CP1-2	Criticality	AC	Administratively limit moderator mass (oil and water) in cylinders containing enriched uranic material to ensure subcriticality by allowing no visible oil and limiting cylinder vapor pressure.	
IROFS23a	VR1-3	Chemical	AC	Administrative use of personal respiratory protection to ensure that inhalation of uranic material and HF consequences are low.	
IROFS23b	VR2-1	Chemical	AC	Administrative use of personal respiratory protection to ensure that inhalation of uranic material and HF consequences are low.	

4.0 PHASED OPERATION

Note: SAR Section 12.0 is the plan for proceeding with Phased Operation. The tables below show the differences between the Accident Sequences and IROFS and the Phased Operation Accident Sequences and IROFS including Transitional Accident Sequences that were identified. ~~Section 4.0 is a proposed plan for proceding with Phased Operation. Some of Tthe information delineated below may yet be approved for implementation. However, as specific design details becomes available and prior to operation, it they will be evaluated and approved in accordance with the Configuration Management process. Approval documentation will be clearly noted (e.g., "Approved per CC-EG-2009-9999").~~ LBDCR-10-0002 LBDCR-10-0033

~~The initial startup of the National Enrichment Facility does not include all facilities, systems, processes, and IROFS described in § 3.3 through § 3.8. The startup of the facility is performed in a phased approach to begin operation as soon as the required facilities, systems, processes, and IROFS are operational to support Initial Plant Operation. As delineated in SAR § 2.1.4, Transition from Design and Construction to Operations, LES is responsible for the design, quality assurance, construction, testing, initial startup, and operation of the facility. As the construction of systems is completed, the systems will undergo acceptance testing as required by procedure, followed by turnover from the construction organization to the operations organization by means of a Commissioning Acceptance Plan.~~

~~The facility will operate in a series of phases determined by operational requirements. Initial Plant Operation phase will include all safety systems necessary to safely conduct enrichment operations. The following phases (Production Phase 1 and Production Phase 2) will add support systems as necessary as the production capacity expands. These phases are described as follows:~~ LBDCR-10-0033

~~1. Initial Plant Operation - During the initial phase of operation at the NEF, all Structures, Systems, and Components (SSCs) that are required to support the start up and early operation of the enrichment facility will beare completed and brought online as necessary to support that function. UF_6 operations will be are conducted in SBM 1001. This building will contains all the required SSCs to support Initial Plant Operations. Additional support functions will be are brought into operation in the following phases. In addition to the permanent plant equipment, some temporary systems will be are installed in the UF_6 Handling Area of SBM 1001 to support operations in place of systems that will not beare not completed. These systems include a storage area for a small amount of radioactive material or solid and liquid waste, and any contaminated equipment that requires storage in preparation for decontamination and repairs, waste treatment, or disposal. In addition, the Local Extract GEVS function will be is combined with the Pumped Extract GEVS to support Initial Plant Operations.~~ LBDCR-10-0002

~~The cascades in SBM 1001 will be are brought online in modules that contain all the systems that are necessary to support the function of the individual cascades. For instance, when the first cascade is started up, enough feed, product and tails stations will be are online to support operation of that cascade. Subsequent cascade modules will be are incrementally brought online as they are needed.~~ LBDCR-10-0002

~~Other support systems not directly part of the UF_6 enrichment process will be are contracted. For example, Llaboratory analysis of UF_6 material will be is contracted to a certified analytical laboratory, and a temporary personnel decontamination trailer will be is provided on site.~~ LBDCR-10-0002

~~2. Production Phase 1 - When enough product has been is enriched and is ready to be shipped to a customer, several other support functions will be completed are available and ready to support plant operations. These support functions include cylinder storage and sampling:~~ LBDCR-10-0002

- ~~Cylinder Storage Facilities (South CRDB)~~
- ~~GEVS systems (Local Extract GEVS, Fume Hood GEVS)~~
- ~~Liquid Sampling Autoclave~~
- ~~Ventilated Room~~
- ~~Sub-Sampling System~~
- ~~UBC Basin~~
- ~~UBC Storage Pad~~
- ~~Product Donor and Receiver Blending Stations~~
- ~~Personnel Decontamination Shower~~
- ~~Chemistry Lab~~
- ~~Mass Spectrometry Lab~~
- ~~Centrifuge Cooling Water Towers~~

~~Addition of these SSCs will provide several additional functions that will support commercial production and shipment to customers. They include This provides additional cylinder storage, the ability to sample product prior to shipment, and other chemistry activities.~~ LBDCR-10-0002

~~3. Production Phase 2 - At the completion of this phase, functions supporting sample analysis, wet and dry waste collection and treatment, and radioactive decontamination and maintenance of plant equipment will be are available. SSCs include:~~ LBDCR-10-0033

- ~~Permanent Cylinder Receipt/Shipment~~
- ~~Expanded Cylinder Storage in CRDB~~
- ~~Liquid Effluent Collection and Treatment~~
- ~~Solid Waste Collection~~
- ~~Vacuum Pump Rebuild Workshop~~
- ~~Decontamination Workshop~~

~~With the addition of these final SSCs, the NEF plant will be fully functional. Additional cascades and support equipment will be can be added in the future to increase production, but the plant will be is fully capable of carrying out continuous commercial production at this point.~~ LBDCR-10-0002

~~4. Production Phase 3 - When construction activities support, cCascade modules in Cascade Hall 1002 will be are started up incrementally as needed to support continued plant expansion. This incremental start up will continues until Cascade Halls 1001 and 1002 are both fully operational.~~

~~5. Production Phase 4 - As SSCs are ready for operation, the extension of SBM 1001 will be brought online using the same modular approach used to start up all previous cascades.~~ LBDCR-10-0002

~~Operate While Constructing~~

~~An Operate While Constructing program is necessary to implement controls for continued construction during facility operation. The Operate While Constructing program is necessary until all cascades and expansion modifications are implemented and accepted by Operations.~~

~~Operate While Constructing is a process that implements controls to ensure that the Integrated Safety Analysis for the National Enrichment Facility remains valid during operations when part of the facility is still being constructed. The process of Phased Operation, placing cascades on-line and facility expansion is estimated to take several years; therefore, Operate While Constructing is an essential safety process for the operation of the National Enrichment Facility.~~

LBDCR-10-0033

~~4.1FACILITY DIFFERENCES FOR PHASED OPERATION~~

LBDCR-10-0033

~~The differences between the facility as described in §§ 3.3 through 3.5 and the facility at the start of Initial Plant Operations through Production Phase 2 are described below. Phased Operation does not impact ISA Summary §§ 1.0 through 3.3.1.~~

~~4.1.1 *(3.3.1.1)* Separations Building Modules~~

A. ~~*(3.3.1.1.2.1)* (Approved per CC-LS-2010-0001) At the beginning of Initial Plant Operations, only one of the two cascades within SBM-1001 will be is operational. Cascades Additional Cascades will be are brought into service as they are commissioned.~~ LBDCR-10-0002

B. ~~*(3.3.1.1.2.2)* (Approved per CC-LS-2010-0001) The Process Services Corridor for SBM-1001 will be operational, but will lack gas transport equipment for cascades that are not on line (NaF Traps, Pump and Trap Sets, process headers, etc). This equipment is installed and operated as additional cascades are completed through Initial Plant Operations, Production Phase 1, and Production Phase 2.~~ LBDCR-10-0002

C. ~~(3.3.1.1.2.3) The UF_6 Handling Area, including the Blending and Liquid Sampling Area, will havehas the following differences:~~ LBDCR-10-0002

1. ~~(Approved per CC-LS-2009-0002, Rev.1) The UF_6 Solid Feed Stations, Feed Purification Stations, Product Take-off Stations, and Tails Take-Off Stations associated with SBM-1001 will be are installed and brought online as needed to support starting up cascades in SBM-1001.~~ LBDCR-10-0002

2. ~~(Approved per CC-LS-2009-0002, Rev.1) The Blending Receiving and Donor Stations are not available for Initial Plant Operation. Blending operations are not conducted until Production Phase 1.(Approved per CC-LS-2009-0002, Rev.1) The Autoclaves, Product Blending Donor Stations, and Product Blending Receiver Stations will not be installed until Production Phase 1. Without these components, no product cylinders can be shipped off site.~~

3. ~~(Approved per CC-LS-2009-0002, Rev.1) The Autoclaves are installed at the time of Production Phase 1. Without these components, product cylinders cannot be shipped to customers but can be shipped off site for temporary storage. The Blending and Liquid Sampling Area has been moved into SBM-1001 UF_6 Handling Area. The Blending Receiving and Donor Stations and Liquid Sampling Autoclaves will not be available for Initial Plant Operation. Blending and liquid sampling will not be conducted until Production Phase 1.~~ LBDCR-10-0002

4. ~~(CC-OP-2009-0002 Pending) The Rail tTransporter will travels on rails embedded in the floor of the UF_6 Handling Area. These rails run the entire width of the module to the west through doors onto a concrete pad where cylinders will be are delivered during Initial Plant Operations and Production Phase 1 Operations. The rail runs east to the CRDB. Upon commencement of Production Phase 2, cylinders will be are delivered through the CRDB, and the west entrance of the UF_6 Handling Area will is no longer be used for cylinder deliveries.~~ LBDCR-10-0002 LBDCR-10-0002

~~4.1.2(3.3.1.2) Technical Services Building (TSB)~~ LBDCR-10-0033

~~A.*(3.3.1.2.2.1)* The Control Room will be is operational as described in § 3.3.1.2.2.1.~~

~~B.*(3.3.1.2.2.2)* The Training and Simulator Rooms will not be are operational as dscribed in §3.3.1.2.2.2. The PCS Training software will be temporarily installed in a classified trailer to facilitate Operator Training in preparation for Initial Plant Operations.~~ LBDCR-10-0002

~~C.*(3.3.1.2.2.3)* The Central Alarm Station (CAS) Area will be is operational as described in § 3.3.1.2.2.3.~~

~~D.*(3.3.1.2.2.4)* (Approved per CC-LS-2009-0002, Rev.2) The Medical Room will be is operational for general first aid cases. Injuries requiring more than general first aid will be are transported off site to local area medical facilities.~~ LBDCR-10-0002

~~E.*(3.3.1.2.2.5)* The Emergency Operations Center Room will be is operational as described in § 3.3.1.2.2.5.~~

~~F.*(3.3.1.2.2.6)* The Technical Support Center Assembly Room will be is operational as described in § 3.3.1.2.2.6.~~ LBDCR-10-0002

~~G.*(3.3.1.2.2.7)* (Approved per CC-LS-2009-0002, Rev.2) The Break Room will is not be operational.~~ LBDCR-10-0002

~~H.*(3.3.1.2.2.8)* (Approved per CC-LS-2009-0002, Rev.2) The I&C Electrical Shop Room will is not be operational. The I&C Electrical Shop serves as a work area for general electrical and I&C components and maintenance. Maintenance on non-contaminated equipment will be is delayed until the I&C Electrical Shop is available or is conducted in other locations on-site or off-site, as necessary, based on the equipment and maintenance required.~~ LBDCR-10-0002 LBDCR-10-0002

~~I.*(3.3.1.2.2.9)* (Approved per CC-LS-2009-0002, Rev.2) The Mechanical Shop Room will is not be operational. The Mechanical Shop serves as a work area for general mechanical maintenance and work such as painting or welding. Maintenance on non-contaminated equipment will be is delayed until the Mechanical Shop is available or conducted in other locations on-site or off-site, as necessary, based on the equipment and maintenance required.~~ LBDCR-10-0002 LBDCR-10-0002

~~J.*(3.3.1.2.2.10)* The Chemical Storage Room will be is operational as described in 3.3.1.2.2.10.~~ LBDCR-10-0002

~~K.*(3.3.1.2.2.11)* (Approved per CC-LS-2010-0001) The Waste Processing Room will be operational. The Waste Processing Room serves as a processing area of non-radioactive wastes. Non-radioactive wastes willare either be stored under appropriate safety controls until processing systems are available, or shipped off-site to a processing facility for treatment and/or disposal at a licensed facility.~~ LBDCR-10-0002

~~L.(3.3.1.2.2.12) (Approved per CC-LS-2009-0002, Rev.1) The Environmental Monitoring Laboratory will is not be operational. Instead, samples will be are collected and shipped to a certified testing facility for analysis. The sample containers will are not be returned to LES, but will be are disposed of by the receiving facility.~~ LBDCR-10-0033 LBDCR-10-0002

~~4.1.3Cylinder Receipt and Dispatch Building (CRDB)~~

~~A.(3.3.1.3.2.1) (Approved per CC-LS-2009-0002, Rev.1) The Solid Waste Collection Room will not be is not operational. The Solid Waste Collection Room is designed to process both wet and dry low-level radioactive solid waste. The small quantity of solid waste that is expected to be generated at NEF will be is stored in accordance with appropriate radiological and criticality safety controls until the Solid Waste Collection Room is completed.~~ LBDCR-10-0002 LBDCR-10-0002

~~B.(3.3.1.3.2.2) (Approved per CC-LS-2009-0002, Rev.1) The Vacuum Pump Rebuild Workshop will not beis not operational. The rebuilding of vacuum pumps is a planned evolution. In the unlikely event that a rebuild of a vacuum pump containing UF_6 is required, the pump will be is replaced with a clean vacuum pump and the contaminated pump stored in accordance with appropriate radiological controls until the Vacuum Pump Rebuild Workshop is completed.~~ LBDCR-10-0002 LBDCR-10-0002

~~C.(3.3.1.3.2.3) (Approved per CC-LS-2009-0002, Rev.1) The Decontamination Workshop will not beis not operational. The decontamination systems in this workshop are designed for radioactive decontamination of materials and equipment used in uranium hexafluoride systems, waste handling systems, and other areas of the plant. The small quantity of contaminated equipment that is expected will be is stored in accordance with appropriate radiological and criticality safety controls until the Decontamination Workshop is completed.~~ LBDCR-10-0002 LBDCR-10-0002

~~D.(3.3.1.3.2.4) (Approved per CC-EG-2009-0369 Pending) The Ventilated Room will not be is not operational. The main activities carried out in the Ventilated Room are servicing chemical traps by removing spent carbon, aluminum oxide, and sodium fluoride and replacing damaged and leaking valves on cylinders which contain UF_6. Servicing chemical traps is a planned evolution and will not be is not required or planned before Ventilated Room is completed. A temporary room will be is constructed has been constructed in the UF_6 Handling Area in SBM 1001 for the purpose of stororageing any contaminated equipment or waste generated during Initial Plant Operations. This room will be is connected to the Pumped Extract GEVS, which is also located in UF_6 Handling Area. The room will be is used for storage only; no processing of equipment or materials will be are conducted. Although a leaking valve on a cylinder containing UF_6 is not expected, if one is identified, the potential leakage will be is stopped using appropriate procedural guidance and the cylinder stored in an appropriate (feed or product) station until repairs can be conducted or the cylinder can be returned to the vendor.~~ LBDCR-10-0002 LBDCR-10-0007 LBDCR-10-0002 LBDCR-10-0007 LBDCR-10-0002

~~Transitional accident sequences associated with this room have been identified that require implementation of existing IROFS. See Tables 4-4 and 4-5.~~ LBDCR-10-0007

~~E.*(3.3.1.3.2.5)* (CC-EG-2010-0005 Pending)(Approved per CC-EG-2010-0005 Rev.1) The Liquid Effluent Collection and Treatment Room will not be is not operational. Instead, the various types of aqueous and non-aqueous liquid wastes generated by plant operations and processes in the facility will be are collected and either shipped off site to an appropriate treatment and disposal facility or stored on site in accordance with appropriate radiological and criticality safety controls until the Liquid Effluent Collection and Treatment Facility is completed.~~ LBDCR-10-0033 LBDCR-10-0002 LBDCR-10-0039

~~(Approved by CC-EG-2008-0519) The LECTS Room will also be used for trap filling. Until the LECTS Room is available, clean (non-UF_6 contaminated) trap fill operations (carbon, aluminum oxide, and NaF) will be are conducted in the Trap Filling and Vacuum Pump Building (2300). Building 2300 will also be used for chemical trap drying; vacuum pump receipt inspections; PFPE oil sampling; PFPE oil analysis; and helium leak testing. No licensed materials will be are contained in this building. Contaminated traps will not be reused.~~ LBDCR-10-0002

~~F. *(3.3.1.3.2.6)* (Approved by CC-RW-2009-0001) The Contaminated Material Handling Room will not be is not operational. Instead, contaminated disposable protective clothing will be is collected, monitored and either shipped off site to a licensed disposal facility or stored on site in accordance with appropriate controls until the Contaminated Material Handling Room and Solid Waste Collection Room are completed and implemented.~~ LBDCR-10-0002

~~*(3.3.1.3.2.7)* (Approved by CC-EG-2009-0293) The Gaseous Effluent Ventilation System (GEVS) Room will not be is not operational. The GEVS System is constructed as three separate systems, Pumped Extract GEVS, Local Extract GEVS, and Fume Hood GEVS (Fume Hood GEVS is not required for Initial Plant Operations).The GEVS System will be constructed as three separate systems, Pumped Extract GEVS, Local Extract GEVS, and Fume Hood GEVS (Fume Hood GEVS is not required for Initial Plant Operations). Pumped Extract GEVS will be is permanently installed in the UF_6 Handling Area of SBM 1001 and will be is operational for Initial Plant Operations. The Pumped Extract GEVS will be is temporarily connected to Local Extract ductwork in the SBM to support Initial Plant Operations.~~ LBDCR-10-0002

~~(CC-EG-2009-0101 Pending) When the GEVS Room is complete, the permanent Local Extract GEVS will bewill be installed along with the Fume Hood GEVS in that room. Once these GEVS systems are operational, the Pumped Extract GEVS' temporary connection to the Local Extract ductwork will be will be isolated.~~ LBDCR-10-0002

~~G.*(3.3.1.3.2.8)* (Approved per CC-LS-2009-0002, Rev. 1) The Mass Spectrometry Laboratory will not be is not operational. Instead, samples will be are collected and shipped to a certified testing facility for analysis. Contaminated sample containers will not be are not returned to LES, but will be are disposed of by the receiving facility.~~

~~H.*(3.3.1.3.2.9)* (Approved per CC-LS-2009-0002, Rev. 1) The Chemical Laboratory will not be is not operational. Instead, samples will be are collected and shipped to a certified testing facility for analysis. Contaminated sample containers will not be are not returned to LES, but will be are disposed of by the facility.~~ LBDCR-10-0002

~~I.*(3.3.1.3.2.10)* (Approved per CC-LS-2010-0001) The Radiation Monitoring Control Room will is not be operational. Normal ingress and egress from the enrichment processing areas will be is through the controlled SBM west entrance. A radiological control point is established within the SBM designed to be the point of demarcation between non-contaminated areas and potentially contaminated areas of the facility. Personnel contamination detection equiptment is staged at the control point. There is a personnel decontamination facility containing hand washing capabilities and safety showers adjacent to the SBM.The required radiological equipment will be available.~~ LBDCR-10-0033 LBDCR-10-0002

~~J. *(3.3.1.3.2.11)* (Approved per CC-LS-2009-0002, Rev.1)The Truck Bay/Shipping and Receiving Area will not be is not operational.~~ LBDCR-10-0002

- ~~(CC-OP-2009-0002 Pending) Commercial transport tractors will be are disconnected from the trailers carrying containers~~~~container carrying trailers~~ ~~and connected to~~~~replaced with~~ ~~LES yard tractors which comply with IROFS36c (diesel fuel capacity less than 280 L). The~~~~LES~~ ~~yard tractors~~ ~~will deliver UF_6 cylinders (i.e., full 48Y feed cylinders, new or cleaned 30B product cylinders) to a cement pad on the west side of SBM 1001 in the southwest corner. The unloading of Cyylinders will be are unloaded~~~~performed~~ ~~with a gantry crane of sufficient capacity to unload cyliners from transport trailers~~~~perform all required cylinder movements. The gantry crane will lift and transfer the cylinder to the rail transporter that sits on rails extened outside the SBM. On completion of receipt inspection, the rail transporter will move the cylinder inside the UF_6 Handling Area~~~~SBM for use~~~~. Cylinders are removed from the facility in the same fashion.~~ LBDCR-10-0005 LBDCR-10-0002 LBDCR-10-0005

~~K.*(3.3.1.3.2.132)* The Cylinder Storage Areas in the CRDB will not be is not operational.~~ LBDCR-10-0002

- ~~(Approved per CC-LS-2009-0002, Rev. 1) The buffer storage of feed cylinders will be is in the UF_6 Handling Area in available Solid Feed, Tails, and Feed Purification Stations until the UBC Storage Pad or the South end of the CRDB are is ready to accept cylinders for storage.~~

- ~~(Approved per CC-LS-2009-0002, Rev. 2) Full product cylinder storage will beis accomplished in the UF_6 Handling Area in Product Take-off Stations and Blending Donor and Take-Off Stations for approximately 3 months after initial plant operations commence. When, the autoclaves are operational, the product cylinders are liquid sampled and shipped to clients. until the UBC Storage Pad or the South end of the CRDB is ready to accept cylinders for storage.~~ LBDCR-10-0002 LBDCR-10-0002

- ~~(Approved per CC-LS-2009-0002, Rev. 1) Full tails cylinders will be are stored in the Tails Take-off Stations until the UBC Storage Pad or the South end of the CRDB is ready to accept cylinders for storage.~~

~~**4.1.4*(3.3.1.4)* Centrifuge Assembly Building (CAB)**~~

~~The CAB will be is operational as described in § 3.3.1.4.~~ LBDCR-10-0002

~~**4.1.5(3.3.1.5)Not Used**~~

~~**4.1.6*(3.3.1.6)* Uranium Byproduct Cylinder (UBC) Storage Pad**~~ LBDCR-10-0033

~~(Approved per CC-LS-2009-0019) The UBC Storage Pad and UBC Basin will not be are not operational at the beginning of the Initial Plant Operations phase; however, these systems are expected to will be operational prior to Production Phase.1.used during this phase. These systems are expected to be included in the initial NRC Operational Readiness Review (ORR). The UBC Storage Pad will be completed in sections. The first section will be completed prior to Production Phase 1. Because the UBC Storage Pad and UBC Basin are expected to be used during the Initial Plant Operation phase, the associated Accident Sequences and IROFS will be available for the initial NRC ORR.~~ LBDCR-10-0002

~~**4.1.7*(3.3.1.7)* Central Utilities Building (CUB)**~~

~~The CUB will not be is not operational as described in § 3.3.1.7. However, Ssystems required for Initial Plant Operation will be are ready in sufficient capacity to support plant operations. The following list describes sSystems within the CUB that will not be are ready for to support Initial Plant Operations are as follows:~~

- ~~(Approved per CC-EG-2008-0392, Rev.0) Centrifuge Cooling Water will be is operational with the exception of the cooling towers. A bypass line has been installed to isolate the cooling towers and only the Centrifuge Water Heat Exchanger (cooled by CCW Chillers) is currently utilized as heat removal source for the CCWS.~~ LBDCR-10-0002
- ~~(CC-EG-2010-0008 Pending) The DI Water System will be is brought online as needed to support make up water requirements after the initial system fill is made. A temporary skid-mounted polisher will be is installed until the permanent equipment is operational in the CUB.~~ LBDCR-10-0018 LBDCR-10-0002
- ~~(Approved per CC-LS-2010-0001) Normal power supplied to the CRDB will not be is not available. However, Depending on the scheduled completion date for storage area within the CRDB, alternate power is available and willmay need to be supplied as necessary.~~ LBDCR-10-0002
- ~~(Approval per CC-LS-2010-0001) Final commissioning and acceptance will be is in progress when Initial Plant Operations begin. These activities will be are complete in sufficient time to support continued plant operations.~~

~~**4.1.8*(3.3.1.8)* Administration Building**~~

~~(Approved per CC-LS-2009-0002, Rev. 2) The Administration Building will not be is not operational.~~ LBDCR-10-0002

~~A.The Administration Building provides over 50 work locations for plant office staff. Until building completion, the staff will continue to be housed in temporary buildings on the east end of the facility.~~

~~B.The Administration Building lobby is designed to act as an assembly area for emergency planning purposes. Alternate assembly areas are designated for assembly until completion for the Administration Building.~~ LBDCR-10-0033

~~**4.1.9(3.3.1.9) Not Used**~~

~~**4.1.10*(3.3.1.10)* Site Security Buildings**~~

~~A.(Approved by CC-LS-2010-001) The main Security Building at the entrance of the facility will not be is operational for access to the Controlled Access Area (CAA). Instead, the existing security trailer will continue to be used. Vehicular traffic passes through additional security checkpoints before being allowed to park. Parking is located outside of the Controlled Access Area (CAA) security fence. Visitor passes are issued at a temporary security trailer located at the south east entrance to the facility.~~ LBDCR-10-0002

~~4.2PROCESS DIFFERENCES~~

~~The differences between the processes as described in § 3.4 and Initial Plant Operation are as follows:~~ LBDCR-10-0033

~~4.2.1*(3.4.1)* Overview of Gas Centrifuge Enrichment Process~~

~~The overview of the gas centrifuge enrichment process is as described in § 3.4.1.~~

~~4.2.2*(3.4.2)* UF_6 Feed System~~

~~*(3.4.2.3)* (Approved per CC-LS-2009-0002, Rev. 1) The UF_6 Feed System will be is operational as described in § 3.4.2 except the UF_6 Feed System will initially contain a sufficient number of operational UF_6 Solid Feed Stations to maintain operational flexibility for the operational Cascade Hall. These Feed Stations will be are brought into service as needed to support incremental startup of cascade modules. All operational feed stations will contain a full feed cylinder. Additional feed cylinders will be are stored in the spare tails stations to provide enough feed stock (and eventually tails storage) for approximately 3 months of operation before requiring additional storage space.~~ LBDCR-10-0002 LBDCR-10-0002

~~4.2.3*(3.4.3)* Cascade System~~

~~(Approved per CC-LS-2009-0002, Rev. 1) The Cascade System will be is operational as described in § 3.4.3 with the exception that only one cascade will be is on line at the beginning of Initial Plant Operation. Cascades will be are brought online incrementally when the centrifuges within each cascade and all support equipment related to each cascade module are commissioned.~~ LBDCR-10-0002

~~4.2.4*(3.4.4)* Product Take-off System~~

~~(Approved per CC-LS-2009-0002, Rev. 1) The Product Take-off System will be is operational as described in § 3.4.4 with the following exception. The Product Low Temperature Takeoff Stations and supporting equipment may not all be in operation when the first cascade is started up. Each Product Low Temperature Takeoff Station will be isbrought online as needed to support the incremental start up of cascades.~~ LBDCR-10-0002

~~4.2.5*(3.4.5)* Tails Take-off System~~

~~(Approved per CC-LS-2009-0002, Rev. 1) The Tails Take-off System will be is operational as described in § 3.4.5 with the exception that all stations not in use will initially contain a full feed cylinder. Once an in-service feed cylinder is emptied, it will be is switched with a full feed cylinder from the tails station. The empty feed cylinder can then be used for normal tails take-off. This cylinder storage strategy will allow approximately 3 months of operation before additional cylinder storage space is required. In addition, the Tails Low Temperature Takeoff Stations and supporting equipment may not all be in operation when the first cascade is started up. Each Tails Low Temperature Takeoff Station will be is brought online as needed to support the incremental start up of cascades. Sufficient Tails Stations will be are available at all times to accommodate peak process flow from the cascades and cascade dump.~~ LBDCR-10-0002 LBDCR-10-0002 LBDCR-10-0037

~~4.2.6*(3.4.6)* Product Blending System~~ LBDCR-10-0033

~~(Approved per CC-LS-2009-0002, Rev. 1) The Product Blending System will not be is not operational as described in § 3.4.6. The Blending System is not needed for Initial Plant Operations. It will be is in operation when needed to support plant operations.~~ LBDCR-10-0002

~~4.2.7*(3.4.7)* Product Liquid Sampling System~~

~~(Approved per CC-LS-2009-0002, Rev. 1) The Product Liquid Sampling System will not be is not operational at Initial Plant Operation. The Product Liquid Sampling Autoclaves will beare unavailable. Autoclaves will be are operational for Production Phase 1 to provide sampling capability for product that is ready for shipment.~~ LBDCR-10-0002

~~4.2.8*(3.4.8)* Contingency Dump System~~

~~(Approved per CC-LS-2009-0002, Rev. 1) The Contingency Dump System will be is operational as described in § 3.4.8. Each operating cascade module has its own dedicated Contingency Dump System available for use~~ ~~that can be routed to a designated Tails LTTS or to the three NaF traps for that cascade~~~~. As additional cascades are completed, additional contingency dump components are installed and made operational in the process services corridor to support incremental plant start up and expansion.~~ LBDCR-10-0002 LBDCR-10-0037

~~4.2.9*(3.4.9)* Gaseous Effluent Vent Systems~~

~~(Approved by CC-EG-2009-0293) The Gaseous Effluent Ventilation System (GEVS) Room will is not be operational. The GEVS System will be is constructed as three separate systems, Pumped Extract GEVS, Local Extract GEVS, and Fume Hood GEVS (Fume Hood GEVS is not required for Initial Plant Operations). Pumped Extract GEVS will be is permanently installed in the UF_6 Handling Area of SBM 1001 and will be is operational for Initial Plant Operations. The Pumped Extract GEVS will be is temporarily connected to Local Extract ductwork in the SBM to support Initial Plant Operations.~~ LBDCR-10-0002 LBDCR-10-0002

~~(CC-EG-2009-0101 Pending) When the GEVS Room in the CRDB is complete, the permanent Local Extract GEVS will be installed along with the Fume Hood GEVS in that room. Once these GEVS systems are operational, in the CRDB, the Pumped Extract GEVS' temporary connection to the Local Extract ductwork will be isolated.~~ LBDCR-10-0002

~~4.2.10*(3.4.10)* Centrifuge Test and Centrifuge Post Mortem Processes~~

~~The Centrifuge Test and Centrifuge Post Mortem Facility will be is operational as described in § 3.4.10.~~ LBDCR-10-0002

~~4.2.11*(3.4.11)*~~ ~~(CC-OP-2009-00002 Pending)~~ **~~Material Handling Processes~~** LBDCR-10-0002

~~(3.4.11.1) Cylinder Receipt and Shipping~~

~~During initial plant operations, cylinders will be are shipped and received via a loading platform on the West side of the UF_6 Handling Area of SBM 1001 (West side SBM 1001). The West side SBM 1001 space for the following services:~~ LBDCR-10-0002

~~•Cylinder loading and unloading~~

~~•Inventory weighing~~

LBDCR-10-0033

~~•Secure internal storage~~

~~•Preparation and storage area for overpack/protective structural packaging.~~

~~The cylinders are received, shipped offsite, stored, and transferred to and from the UF_6 Handling Area until the CRDB and UBC Storage Pad become operational.~~

~~Full feed cylinders, empty feed cylinders, semi-finished product cylinders, and UBCs are stored in the UF_6 Handling Area until the CRDB and UBC Storage Pad become operational.~~

~~The West side SBM 1001 loading platform layout is shown on Figure 3.9-1, Separations Building Module 1001, West Side Material Receipt Platform. The UF_6 Feed cylinder delivery and storage requirements are presented in Table 3.9-1, Initial Plant Operations Phase, UF_6 Feed Cylinder Delivery and Storage Requirements.~~

LBDCR-10-0002

~~4.2.11.1.1.1(3.4.11.1.1) Description~~

~~Commercial transport tractors will be are disconnected from the trailers carry containers and connected to LES yard tractors which comply IROFS36c (diesel fuel capacity less than 280 L). The yard tractor will deliver UF_6 cylinders (i.e., full 48Y feed cylinders, and new or cleaned 30B product cylinders) to West side SBM 1001 receipt platform. Cylinders will be areunloaded with a gantry crane of sufficient capacity to perform all required cylinder movements. The gantry crane will lift and transfer the cylinder to the rail transporter that sits on rails that are extended outside the SBM. On completion of receipt inspection, the rail transporter will move the cylinder inside the UF_6 Handling Area. Cylinders are removed from the facility in the same fashion.~~

LBDCR-10-0002

~~4.2.11.1.1.1(3.4.11.1.2) Equipment~~

LBDCR-10-0002

~~The following equipment is used for cylinder handling on the West side SBM 1001 receipt platform.~~

~~A.Vehicle Loading Platform~~

~~The vehicle loading and unloading platform is located adjacent to the West side SBM 1001 equipment hatch. This platform provides a safe method of transfer from the vehicle trailer to rail transporter located on the platform.~~

~~B.Gantry Crane.~~ LBDCR-10-0033

~~A dedicated gantry crane is used to handle cylinders on the vehicle loading platform. The crane spans the width of the loading platform to access vehicle trailers and the rail transporter. The hoist has a maximum lift of approximately 6.1 m (20 ft). Crane specifications are as follows:~~

~~•Span 2011.3 m (3037 ft)~~ LBDCR-10-0002

~~•Capacity 20 MT (44,100 lb)~~

~~•Hoist lift height 3.1 m (20 ft)~~

~~•Hoist lift speed 3 m/min & 0.5 m/min (10 ft/min & 1.6 ft/min)~~

~~•Travel length 7.9 m (26 ft)~~

~~•Bridge travel speed (VFD) 19.8 m/min (65 ft/min)~~

~~•Brake type Direct Current Disk~~

~~C.Scale.~~

~~(Approved by CC-EG-2009-0291) Inventory Weighing will be is performed using a temporary scale in the UF_6 Handling Area of SBM 1001. The scale is identical to the scales described in § 3.4.11.1.2.C. Each cylinder that enters or exits the UF_6 Handling Area during the Initial Operations Phase is weighed. A weigh scale capable of weighing a load of 17 MT (37,500 lb) and capable of accepting a load of 20 MT (44,100 lb) is installed. The scale is capable of weighing to a tolerance of ±2.5 kg (±5.5 lb). The scale has reader and printout facilities.~~ LBDCR-10-0002

~~D.Powered Vehicles And Rail Transporters.~~

~~LES yard tractors that comply IROFS36c (diesel fuel capacity less than 280 L) will be are utilized to deliver the vehicle trailer containing cylinders to the West side SBM 1001 receipt platform. The gantry crane will lift and transfer the cylinder to the stillage just outside the SBM accessible to the rail transporter. On completion of receipt inspection, the rail transporter will retrieve the cylinder for use. Cylinders are removed from the facility in the same fashion.~~ LBDCR-10-0002

~~4.2.11.1.1.2(*3.4.11.1.3*) Cylinder Specifications.~~

~~As specified in § 3.4.11.1.3.~~ LBDCR-10-0002

~~4.2.11.1.1.3(3.4.11.1.4, 3.4.11.1.5 and 3.4.11.1.6) Storage~~

~~Storage will be is made available in phases. Initially, cylinders will be are stored in their respective stations in the UF_6 Handling Area. When available, the South end of the CRDB and the UBC Storage Pad will be is utilized for storage of cylinders.~~ LBDCR-10-0002

LBDCR-10-0005

- ~~During initial plant operations, cylinders will be are placed on and removed from delivery trucks using a mobile Temporary Cylinder Handling gGantry cCrane of sufficient capacity. They will be are moved inside the UF_6 area using the rail transporter and in the CRDB (when available in Production Phase 1) using the West Bridge Crane. The other bridge cranes in the CRDB will be are installed at a later date.~~ LBDCR-10-0002 LBDCR-10-0002

  ~~Temporary Cylinder Handling Ganrty Crane~~

  ~~Sapn 37 ft~~
  ~~Capacity 20 Ton~~
  ~~Hoist lift height 20 ft~~
  ~~Hoist lift speed 10 ft/min & 1.6 ft/min~~
  ~~Travel length 26 ft~~
  ~~Travel speed (VFD) 65 ft/min~~
  ~~Direct Current Self-Adjusting Disc Electric Hoist Brake~~

  LBDCR-10-0005 LBDCR-10-0033

- ~~The UBC Storage Pad will not be is not operational at Initial Plant Operations. It will be is completed in phases in time to provide storage of cylinders while the CRDB is being finished.~~ LBDCR-10-0002

  ~~4.2.11.1.1.4 (*3.4.11.1.7*) Cylinder Deliveries~~

~~As specified in § 3.4.11.1.7, with the exception that the numbers of deliveries and shipments will be are less during the Initial Plant Operations Phase due to limited initial production and storage capacity.~~ LBDCR-10-0002

~~4.3UTILITY AND SUPPORT SYSTEM DIFFERENCES~~

~~The differences between the utility and support systems as described in § 3.5 and Initial Plant Operation are as follows:~~ LBDCR-10-0033

~~(1).*(3.5.1)* The Building Ventilation will be is operational as described in § 3.5.1.~~

~~(2).*(3.5.2)* The Electrical System will be is operational as described in § 3.5.2.~~ LBDCR-10-0002

~~(3).*(3.5.3)* The Compressed Air System will be is operational as described in § 3.5.3.~~

~~(4).Not Used *(3.5.4.3)*((Approved per CC- LEGS-20092010-00028, Rev.1Pending) The Deionized Water System will not be operational. Initial system fill and makeup water, if required, will be performed by an external source, such as a tanker truck. A temporary skid-mounted polisher will be installed until the permanent equipment is operational in the CUB.~~ LBDCR-10-0018

~~(5).*(3.5.5.1)* (Approved per CC-EG-2008-0392, Rev. 0)The Centrifuge Cooling Water (CCW) System will be is operational with the exception of the cooling water towers. The cooling water towers will be are bypassed and heat removal will be is performed by the CCW heat exchanger cooled by the CCW chiller units. This arrangement can support several cascades on line [CC-EG-2008-0392]. When the cooling towers are completed and additional cooling is needed, the bypass valve will be is closed and normal operation will commence.~~ LBDCR-10-0002 LBDCR-10-0002

~~(6).*(3.5.6)* The Sewage System will be is operational as described in § 3.5.6.~~ LBDCR-10-0002

~~(7).*(3.5.7)* The Communication and Alarm Annunciation System will be is operational as described in § 3.5.7.~~

~~(8).*(3.5.8)* Not Used~~

~~(9). *(3.5.9)* The Control System will be is operational as described in § 3.5.9.~~ LBDCR-10-0002

~~(10). *(3.5.10)* The Standby Diesel Generator System will be is operational as described in § 3.5.10.~~

~~(11).*(3.5.11)* The Nitrogen System will be is operational as described in § 3.5.11.~~ LBDCR-10-0002

LBDCR-10-0033

~~(12).*(3.5.12)* The Liquid Effluent Collection and Treatment System (LECTS) will not beis not operational. Instead, the various types of aqueous and non-aqueous liquid wastes generated in the facility will be are collected and either shipped off site to an appropriate treatment and disposal facility or stored on site in accordance with appropriate radiological and criticality safety controls until the Liquid Effluent Collection and Treatment Facility is completed.~~ LBDCR-10-0002

~~(13).*(3.5.13)* The Solid Waste Collection System will not beis not operational. Solid wastes will either be stored on site using appropriate chemical, radiological, and criticality safety controls until the Solid Waste Collection Room is completed or shipped off site to a processing facility for treatment and/or disposal at a licensed facility.~~ LBDCR-10-0002

~~(14).*(3.5.14)* (Approved per CC-LS-2009-0002, Rev.1) The Decontamination Workshop will not be is not operational. Contaminated equipment will be is stored in accordance with appropriate radiological and criticality safety controls until the Decontamination Workshop is completed.~~ LBDCR-10-0002

~~(15).*(3.5.15)* (Approved per CC-LS-2009-0002, Rev.2) The PFPE Oil Recovery System will not be is not operational; however, the system has no impact on any safety aspect of facility operation. PFPE oil will either be appropriately stored on site until the system is operational or disposed of at a certified disposal facility.~~ LBDCR-10-0002

~~(16).Not Used~~

~~(17).*(3.5.17)* (Approved per CC-EG-2009-0369 Pending) The Ventilated Room will not be is not operational. A temporary room has beenwill be is constructed in the UF_6 Handling Area in SBM-1001 to for store any equipment or waste that would normally be stored in the Ventilated Roomstorage during initial Plant Operations as necessary. This room will be is connected to the Pumped Extract GEVS. The room will be is used for storage only; no processing of equipment or materials will be conducted. Although a leaking valve on a cylinder containing UF_6 is not expected, if one is identified, the potential leakage will be is stopped in one of three ways depending on the nature of the damage. The valve will be is capped, the valve stem will be is tightened or the packing gland will be is tightened and the cylinder stored in an appropriate (feed or product) station until repairs can be conducted or the cylinder can be returned to the vendor.~~ LBDCR-10-0007 LBDCR-10-0002 LBDCR-10-0002 LBDCR-10-0007

~~Transitional accident sequences associated with this room have been identified that require implementation of existing IROFS. See Tables 4-4 and 4-5.~~

~~*R.(3.5.18)* (Approved per CC-LS-2009-0002, Rev. 1) The Chemistry Laboratory will not be is not operational. Instead, samples will beis collected and shipped to a certified testing facility for analysis. The sample containers will not be are not returned to LES, but will be are disposed of by the facility.~~ LBDCR-10-0002

LBDCR-10-0033

~~4.4~~4.1 ACCIDENT SEQUENCE / IROFS DIFFERENCES

~~4.4.1~~4.1.1 Existing Accident Sequences

LBDCR-10-0007

Tables ~~3.9~~4-1 and ~~3.9~~4-2 identify accident sequences that are not applicable for each phase of the specific phases of the Phased Operation approach. The justification for the accident sequence not being applicable for a particular phase is included in columns 3, 4, and 5:

Table 4-1 *(Table 3.7-2)* Affected Accident Sequence Descriptions

Accident Sequence	Description and Applicable IROFS	Justification			
		Initial Plant Operations (IPO)	Production Phase 1	Production Phase 2	
PT3-5	Transfer of enriched uranic material during decontamination/waste disposal into a non-safe-by-design container from washing flex hose, emptying carbon trap, draining oil from product pump, scraping breakdown materials from product internals. • (IROFS15) Administratively restrict an independent parameter of the criticality sequence to ensure subcritical configuration by preventing additional transfer of enriched uranic material to another container if that container contains enriched uranic material and is non-safe-by-design container.	The activities associated with this accident sequence are not conducted during IPO as the CRDB and necessary equipment are not available.	The activities associated with this accident sequence are not conducted during Production Phase 1 as the CRDB and necessary equipment are not available	Applicable	LBDCR-10-0045
PB1-1	Blending donor station heater controller fails on resulting in a hydraulic rupture of the cylinder. • (IROFS4) Automatic trip of station heaters on high station internal air temperature to ensure cylinder integrity • (IROFS5) Automatic trip of station heaters on high station internal air temperature to ensure cylinder integrity	Cylinders ~~will be~~ are stored in the Stations. There ~~will be~~ are no blending operations conducted.	Applicable	Applicable	LBDCR-10-0045
PB1-3	Placing a product 30B cylinders into a non-safe criticality interaction arrangement resulting in a criticality event. • (IROFS45) Prior to moving a cylinder containing enriched uranium in the CRDB or the Blending and Liquid Sampling Area, verify that the stored cylinders containing enriched uranium in are in a horizontal, co-planar (i.e., non-stacked), condition and that no other cylinder containing enriched uranium is in movement in the associated area	Cylinders ~~will be~~ are stored in the Stations. There ~~will be~~ are no blending operations conducted.	Applicable	Applicable	LBDCR-10-0002

Table 4-1 *(Table 3.7-2)* Affected Accident Sequence Descriptions

Accident Sequence	Description and Applicable IROFS	Justification			
		Initial Plant Operations (IPO)	Production Phase 1	Production Phase 2	LBDCR-10-0045
PB2-1	Blending receiver station cold box defrost heater controller fails on resulting in a hydraulic rupture of the cylinder. • (IROFS1) Automatic trip of defrost heater and fan on high air return temperature to ensure cylinder integrity • (IROFS2) Automatic trip of defrost heater and fan on high station internal air temperature to ensure cylinder integrity	Cylinders ~~will be~~ are stored in the Stations. There ~~will be~~ are no blending operations conducted.	Applicable	Applicable	
PB2-2	Excessive moderator introduced into the receiver cylinder before being put in the blending receiver station resulting in a criticality event. • (IROFS16a) Administratively limit moderator mass (oil and water) in cylinders containing enriched uranic material by limiting cylinder vapor pressure prior to introducing product	Cylinders ~~will be~~ are stored in the Stations. There ~~will be~~ are no blending operations conducted.	Applicable	Applicable	
PB2-4	Failure of the blending receiver low temperature take-off station load cell causing the cylinder to be over filled. The over filled cylinder is then warmed to ambient and ruptures. • (IROFS38) Administratively limit the cylinder fill mass by verifying cylinder weight is within specified trending limits once per shift during filling of the cylinder	Cylinders ~~will be~~ are stored in the Stations. There ~~will be~~ are no blending operations conducted.	Applicable	Applicable	LBDCR-10-0002

Table 4-1 *(Table 3.7-2)* Affected Accident Sequence Descriptions

Accident Sequence	Description and Applicable IROFS	Justification			
		Initial Plant Operations (IPO)	Production Phase 1	Production Phase 2	LBDCR-10-0045
PB2-6	Hydrocarbon oil (a moderator) is used in place of per fluorinated polyether (PFPE) oil during maintenance of Ventilated Room, and Blending and Liquid Sampling System vacuum pumps resulting in a criticality event. • (IROFS30a) Administratively limit hydrocarbon oil (moderator mass) to ensure moderation control assumptions are maintained by controlling the type of oil used in process vacuum pumps • (IROFS30b) Administratively verify, through testing prior to addition of oil, that process vacuum pump oil is not hydrocarbon oil • (IROFS30c) Administratively verify, through testing after addition of oil, that process vacuum pump oil is not hydrocarbon oil	Ventilated Room, and Blending and Liquid Sampling System ~~will not be~~ are not available for initial plant operations.	Applicable	Applicable	
PB3-3	Blending and Sampling Vent carbon trap becomes saturated with UF_6 resulting in a release from the vacuum pump due to a plug in the discharge causing the seals to fail on high pressure. • (IROFS3) Automatic trip of the vacuum pump on carbon trap high weight • (IROFS47a) A flow restriction to ensure, in the event of a postulated release, worker consequences of inhalation of uranic material and HF are low	Cylinders ~~will be~~ are stored in the Stations. There ~~will be~~ are no blending operations conducted.	Applicable	Applicable	
PB4-1	Product liquid sampling autoclave heater failure (heat off) followed by reheat. Solidification of UF_6 in the sampling manifold isolates pressure trips. Upon reheat, the sampling manifold ruptures. • (IROFS10) Design feature to maintain Product Liquid Sampling Autoclave leak tight integrity	Cylinders ~~will be~~ are stored in the Stations. There ~~will be~~ are no liquid sampling operations conducted.	Applicable	Applicable	LBDCR-10-0002

Table 4-1 *(Table 3.7-2)* Affected Accident Sequence Descriptions

Accident Sequence	Description and Applicable IROFS	Justification			
		Initial Plant Operations (IPO)	Production Phase 1	Production Phase 2	
PB4-2	Product liquid sampling autoclave heater controller fails on resulting in a hydraulic rupture of the cylinder. • (IROFS11) Automatic trip of the autoclave heater and fan on autoclave high internal air temperature • (IROFS12) Automatic trip of the autoclave heater and fan on autoclave high internal air pressure	Cylinders ~~will be~~ are stored in the Stations. There ~~will be~~ are no liquid sampling operations conducted.	Applicable	Applicable	LBDCR-10-0045
PB4-3	Sampling manifold purge valve left open and blind flange not fitted. Upon liquid sample heat up and tipping of the liquid sampling autoclave, the sampling manifold releases liquid UF_6 into the autoclave. • (IROFS10) Design feature to maintain Product Liquid Sampling Autoclave leak tight integrity	Cylinders ~~will be~~ are stored in the Stations. There ~~will be~~ are no liquid sampling operations conducted.	Applicable	Applicable	LBDCR-10-0045
PB4-4	Over filled product cylinder heated in the sampling autoclave results in cylinder rupture. • (IROFS10) Design feature to maintain Product Liquid Sampling Autoclave leak tight integrity • (IROFS42) Administratively limit the cylinder fill mass prior to placement and heating	Cylinders ~~will be~~ are stored in the Stations. There ~~will be~~ are no liquid sampling operations conducted.	Applicable	Applicable	

Table 4-1 *(Table 3.7-2)* Affected Accident Sequence Descriptions

Accident Sequence	Description and Applicable IROFS	Justification			
		Initial Plant Operations (IPO)	Production Phase 1	Production Phase 2	LBDCR-10-0045
VR1-1	Vessel pressure test/valve change rig carbon trap becomes saturated with UF_6 by a small UF_6 leak through a process valve in the vessel pressure test/valve change rig releasing UF_6 into the SB GEVS resulting in a criticality event. • (IROFS3) Automatic trip of the vacuum pump on carbon trap high weight • (IROFS21) Automatic trip of the SB GEVS on ^{235}U selective high-high gamma	This operation ~~will not~~ is not ~~be~~ conducted because the rig and the Ventilated Room ~~will not be~~ are not available for use.	Applicable	Applicable	LBDCR-10-0045
VR1-2	Excessive opening the cold trap outlet throttle valve in the cylinder vent system resulting in high UF_6 flow and high temperature in the carbon trap and release of UF_6 into the SB GEVS resulting in a criticality event. • (IROFS21) an automatic trip of the SB GEVS on ^{235}U selective high-high gamma • (IROFS22) Automatic trip of the vacuum pump on carbon trap high temperature	This operation ~~will not be~~ is not conducted because the Ventilated Room and associated system ~~will not be~~ is not available for use.	Applicable	Applicable	
VR1-3	Failure of a cylinder superior valve or the flexible piping of a cylinder containing UF_6 undergoing a cylinder pressure test after repair/replacement of a leaking cylinder component. • (IROFS23a) Administrative use of personnel respiratory protection when performing positive pressure testing of a UF_6 cylinder after repair/replacement of a leaking cylinder component	Positive pressure testing of cylinders ~~will not be~~ is not conducted.	Applicable	Applicable	

Table 4-1 *(Table 3.7-2)* Affected Accident Sequence Descriptions

Accident Sequence	Description and Applicable IROFS	Justification			
		Initial Plant Operations (IPO)	Production Phase 1	Production Phase 2	
VR1-5	Vent subsystem carbon trap becomes saturated with UF_6 caused by a small UF_6 leak through a ventilated room mobile pump and trap rig cold trap valve resulting in a release from the vacuum pump due to a plug in the discharge causing the seals to fail on high pressure. • (IROFS3) Automatic trip of the vacuum pump on carbon trap high weight • (IROFS47b) A flow restriction to ensure worker consequences of inhalation of uranic material and HF are low	This operation ~~will not~~ is not be conducted because the ventilated room and rig ~~will not be~~ are not available for use.	Applicable	Applicable	LBDCR-10-0045 LBDCR-10-0002 LBDCR-10-0045
VR2-1	Loss of containment of a chemical trap and pouring of the contents of the trap into the Ventilated Room cause by operator error in unloading a carbon trap or impact to a carbon trap. • (IROFS23b) Administrative use of personnel respiratory protection	This operation ~~will not be~~ is not conducted because the ventilated room and rig ~~will not be~~ are not available for use.	Applicable	Applicable	
VR2-2	Loss of containment of a chemical dump trap and pouring of the contents of the trap into the Ventilated Room cause could be operator error in unloading a chemical dump trap or impact to a chemical dump trap. • (IROFS23b) Administrative use of personnel respiratory protection • (IROFS24a) Administrative establishment of airflow away from the worker	This operation ~~will not be~~ is not conducted as the required equipment ~~will not be~~ is not available.	Applicable	Applicable	

Table 4-1 *(Table 3.7-2)* Affected Accident Sequence Descriptions

Accident Sequence	Description and Applicable IROFS	Justification			
		Initial Plant Operations (IPO)	Production Phase 1	Production Phase 2	LBDCR-10-0045
VR2-7	Sufficient uranic mass accumulation from transfer of carbon containing enriched uranic material to cause criticality in a solid waste container. • (IROFS31a) Administratively limit ^{235}U mass in non-safe-by-design solid waste containers to ensure subcriticality by performing independent sampling and assay analysis (independent of IROFS31b). • (IROFS31b) Administratively limit ^{235}U mass in non-safe-by-design solid waste containers to ensure subcriticality by performing independent sampling and assay analysis (independent of IROFS31a). • (IROFS31c) Administratively limit ^{235}U mass in non-safe-by-design solid waste containers to ensure subcriticality using bookkeeping procedures.	A similar accident sequence (TVR1-1) is applicable to the new storage room in the SBM and IROFS31a, 31b, and 31c are applied to the room.~~This operation will not be is not conducted as the ventilated room will not be is not available.~~	Applicable	Applicable	LBDCR-10-0002 LBDCR-10-0007

Table 4-1 *(Table 3.7-2)* Affected Accident Sequence Descriptions

Accident Sequence	Description and Applicable IROFS	Justification			
		Initial Plant Operations (IPO)	Production Phase 1	Production Phase 2	
FR1-1	The accident sequence is the combination of numerous conditions assumed to lead to a criticality in a PFPE Oil waste container being transported: -a uranyl fluoride/water mixture at an H/U atomic ratio near optimum moderation, -nearly or completely filled with the above material at a high enough enrichment to achieve a configuration favorable for criticality -interaction (i.e., proximity limit not maintained) with more than one component containing fissile material, • (IROFS14a) Administratively restrict proximity of vessels in non-designed locations containing enriched uranic material by verifying the use of a safe-by-design transfer frame prior to movement of the associated waste container containing enriched uranic material	A similar accident sequence (TVR1-2) ~~will be~~ is applicable to the new storage room in the SBM and IROFS14a ~~will be~~ is applied to the room.	Applicable	Applicable	LBDCR-10-0045 LBDCR-10-0045 LBDCR-10-0007 LBDCR-10-0002

Table 4-1 *(Table 3.7-2)* Affected Accident Sequence Descriptions

Accident Sequence	Description and Applicable IROFS	Justification			
		Initial Plant Operations (IPO)	Production Phase 1	Production Phase 2	LBDCR-10-0045
FR1-2	The accident sequence is the combination of numerous conditions assumed to lead to a criticality in a PFPE Oil waste container being stored: -a uranyl fluoride/water mixture at an H/U atomic ratio near optimum moderation, -nearly or completely filled with the above material at a high enough enrichment to achieve a configuration favorable for criticality -interaction (i.e., proximity limit not maintained) with more than one component containing fissile material, • (IROFS14b) Administratively restrict proximity of vessels in non-designed locations containing enriched uranic material by verifying the associated storage array condition is acceptable, prior to moving a waste container within 180 cm of the associated storage array	A similar accident sequence (TVR1-3) ~~will be~~ is applicable to the new storage room in the SBM and IROFS14a ~~will be~~ is applied to the room.	Applicable	Applicable	LBDCR-10-0045 LBDCR-10-0007 LBDCR-10-0002
FR2-1	This accident sequence is identical to sequence FR1.1, except it is located in the hydrocarbon removal portion of PFPE Oil Recovery System. • (IROFS14a) Administratively restrict proximity of vessels in non-designed locations containing enriched uranic material by verifying the use of a safe-by-design transfer frame prior to movement of the associated waste container containing enriched uranic material	This accident sequence is not applicable because the PFPE Oil Recovery System ~~will not be~~ is not available.	This accident sequence is not applicable because the PFPE Oil Recovery System ~~will not be~~ is not available.	This accident sequence is not credible because thePFPE Oil Recovery System ~~will not be~~ is not available.	

Table 4-1 *(Table 3.7-2)* Affected Accident Sequence Descriptions

Accident Sequence	Description and Applicable IROFS	Justification			
		Initial Plant Operations (IPO)	Production Phase 1	Production Phase 2	
FR2-2	This accident sequence is identical to sequence FR1.2, except it is located in the hydrocarbon removal portion of PFPE Oil Recovery System. • (IROFS14b) Administratively restrict proximity of vessels in non.designed locations containing enriched uranic material by verifying the associated storage array condition is acceptable, prior to moving a waste container within 180 cm of the associated storage array	This accident sequence is not applicable because the PFPE Oil Recovery System ~~will not be~~ is not available.	This accident sequence is not applicable because the PFPE Oil Recovery System ~~will not be~~ is not available.	This accident sequence is not credible because the PFPE Oil Recovery System ~~will not be~~ is not available.	LBDCR-10-0045
DS1-1	This accident sequence is identical to sequence FR1.1, except it is located in the Equipment Decontamination System. • (IROFS14a) Administratively restrict proximity of vessels in non.designed locations containing enriched uranic material by verifying the use of a safe.by.design transfer frame prior to movement of the associated waste container containing enriched uranic material	This accident sequence is not applicable because the Decontamination Workshop ~~will not be~~ is not available.	This accident sequence is not applicable because the Decontamination Workshop ~~will not be~~ is not available.	Applicable	LBDCR-10-0002 LBDCR-10-0045
DS1-2	This accident sequence is identical to sequence FR1.2, except it is located in the Equipment Decontamination System. • (IROFS14b) Administratively restrict proximity of vessels in non.designed locations containing enriched uranic material by verifying the associated storage array condition is acceptable, prior to moving a waste container within 180 cm of the associated storage array	This accident sequence is not applicable because the Decontamination Workshop ~~will not be~~ is not available.	This accident sequence is not applicable because the Decontamination Workshop ~~will not be~~ is not available.	Applicable	

Table 4-1 *(Table 3.7-2)* Affected Accident Sequence Descriptions

Accident Sequence	Description and Applicable IROFS	Justification			
		Initial Plant Operations (IPO)	Production Phase 1	Production Phase 2	
DS1-3	Accumulation of sufficient uranium mass to cause criticality in the decontamination tank. • (IROFS19a) Administratively limit the calculated tank uranic mass inventory using bookkeeping procedures to determine calculated tank uranic mass inventory prior to transfer • (IROFS19c) Administratively limit measured tank uranic mass inventory to ensure a subcritical mass by performing independent sampling and measurement independent of IROFS19d • (IROFS19d) Administratively limit measured tank uranic mass inventory to ensure a subcritical mass by performing independent sampling and measurement independent of IROFS19c	This accident sequence is not applicable because the Decontamination Workshop ~~will not be~~ is not available.	This accident sequence is not applicable because the Decontamination Workshop ~~will not be~~ is not available.	Applicable	LBDCR-10-0045 LBDCR-10-0045
DS2-1	This accident sequence is identical to sequence FR1.1, except it is located in the Flexible Hose Decontamination System. • (IROFS14a) Administratively restrict proximity of vessels in non.designed locations containing enriched uranic material by verifying the use of a safe.by.design transfer frame prior to movement of the associated waste container containing enriched uranic material	This accident sequence is not applicable because the Decontamination Workshop ~~will not be~~ is not available.	This accident sequence is not applicable because the Decontamination Workshop ~~will not be~~ is not available.	Applicable	LBDCR-10-0002
DS2-2	This accident sequence is identical to sequence FR1.2, except it is located in the Flexible Hose Decontamination System. • (IROFS14b) Administratively restrict proximity of vessels in non.designed locations containing enriched uranic material by verifying the associated storage array condition is acceptable, prior to moving a waste container within 180 cm of the associated storage array	This accident sequence is not applicable because the Decontamination Workshop ~~will not be~~ is not available.	This accident sequence is not applicable because the Decontamination Workshop ~~will not be~~ is not available.	Applicable	

Table 4-1 *(Table 3.7-2)* Affected Accident Sequence Descriptions

Accident Sequence	Description and Applicable IROFS	Justification			
		Initial Plant Operations (IPO)	Production Phase 1	Production Phase 2	LBDCR-10-0045
DS2-3	Accumulation of sufficient uranium mass in the first rinse tank to cause criticality. • (IROFS19a) Administratively limit the calculated tank uranic mass inventory using bookkeeping procedures to determine calculated tank uranic mass inventory prior to transfer • (IROFS19c) Administratively limit measured tank uranic mass inventory to ensure a subcritical mass by performing independent sampling and measurement independent of IROFS19d • (IROFS19d) Administratively limit measured tank uranic mass inventory to ensure a subcritical mass by performing independent sampling and measurement independent of IROFS19c	This accident sequence is not applicable because the Decontamination Workshop ~~will not be~~ is not available.	This accident sequence is not applicable because the Decontamination Workshop ~~will not be~~ is not available.	Applicable	LBDCR-10-0045 LBDCR-10-0002
DS3-1	This accident sequence is identical to sequence FR1.1, except it is located in the Equipment Decontamination System. • (IROFS14a) Administratively restrict proximity of vessels in non.designed locations containing enriched uranic material by verifying the use of a safe.by.design transfer frame prior to movement of the associated waste container containing enriched uranic material.	This accident sequence is not applicable because the Decontamination Workshop ~~will not be~~ is not available.	This accident sequence is not applicable because the Decontamination Workshop ~~will not be~~ is not available.	Applicable	
DS3-2	This accident sequence is identical to sequence FR1.2, except it is located in the Equipment Decontamination System. • (IROFS14b) Administratively restrict proximity of vessels in non.designed locations containing enriched uranic material by verifying the associated storage array condition is acceptable, prior to moving a waste container within 180 cm of the associated storage array	This accident sequence is not applicable because the Decontamination Workshop ~~will not be~~ is not available.	This accident sequence is not applicable because the Decontamination Workshop ~~will not be~~ is not available.	Applicable	

Table 4-1 *(Table 3.7-2)* Affected Accident Sequence Descriptions

Accident Sequence	Description and Applicable IROFS	Justification			
		Initial Plant Operations (IPO)	Production Phase 1	Production Phase 2	LBDCR-10-0045
CL3-1	No liquid nitrogen in the Dewar cold trap of the Sub-Sampling System in the chemical laboratory which results in a cold trap temperature above the UF_6 sublimination temperature. The liquid UF_6 sublimes to a gas and is pumped by the vacuum pump and is transferred to the CRDB GEVS resulting in a criticality event. • (IROFS20) Automatic isolation of cold trap on cold trap high temperature • (IROFS21) Automatic trip of the CRDB GEVS on ^{235}U selective high-high gamma	This accident sequence is not applicable because the Sub-Sampling System ~~will not be~~ is not available.	Applicable	Applicable	
CL3-2	No liquid nitrogen in the UF_6 cold trap which results in a cold trap temperature above the UF_6 sublimination temperature. During the process of transferring product samples for assay analysis, liquid UF_6 flashes to gas resulting in a release of UF_6 to the atmosphere exposing the worker. • (IROFS24b) Administrative establishment of airflow away from worker • (IROFS46) Administrative verification that product samples are in a solid state, prior to transfer	Chemistry Lab ~~will not be~~ is not available.	Applicable	Applicable	LBDCR-10-0002 LBDCR-10-0045
CL3-3	UF_6 sub-sampling unit heater controller fails on resulting in a hydraulic rupture of the sample bottle. • (IROFS24b) Administrative establishment of air flow away from the worker • (IROFS43) Automatic trip of UF_6 sub-sampling unit hotbox heater or high hotbox internal temperature	This accident sequence is not credible because the Sub-Sampling System ~~will not be~~ is not available.	Applicable	Applicable	

Table 4-1 *(Table 3.7-2)* Affected Accident Sequence Descriptions

Accident Sequence	Description and Applicable IROFS	Justification			
		Initial Plant Operations (IPO)	Production Phase 1	Production Phase 2	
SW1-1	This accident sequence is identical to sequence FR1-1, except it is located in the solid waste collection system. • (IROFS14a) Administratively restrict proximity of vessels in non-designed locations containing enriched uranic material by verifying the use of a safe-by-design transfer frame prior to movement of the associated waste container containing enriched uranic material	The Solid Waste Collection Room ~~will not be~~ is not completed. A ~~temporary~~ Ventilated Storage ~~r~~Room ~~will be~~ is constructed in the UF_6 Handling Area for storage of contaminated material until the Solid Waste Collection Room is complete. Operations conducted in the Solid Waste Collection Room (other than storage) ~~will not be~~ is not conducted. Therefore, this accident sequence has no consequences exceeding 10 CFR 70.61.	The Solid Waste Collection Room ~~will not be~~ is not completed. A ~~temporary~~ Ventilated Storage ~~r~~Room ~~will be~~ is constructed in the UF_6 Handling Area for storage of contaminated material until the Solid Waste Collection Room is complete. Operations conducted in the Solid Waste Collection Room (other than storage) ~~will not be~~ is not conducted. Therefore, this accident sequence has no consequences exceeding 10 CFR 70.61.	Applicable	LBDCR-10-0045 LBDCR-10-0045 LBDCR-10-0033 LBDCR-10-0002

Table 4-1 *(Table 3.7-2)* Affected Accident Sequence Descriptions

Accident Sequence	Description and Applicable IROFS	Justification			
		Initial Plant Operations (IPO)	Production Phase 1	Production Phase 2	
SW1-2	This accident sequence is identical to sequence FR1.2, except it is located in the solid waste collection system. • (IROFS14b) Administratively restrict proximity of vessels in non-designed locations containing enriched uranic material by verifying the associated storage array condition is acceptable, prior to moving a waste container within 180 cm of the associated storage array	The Solid Waste Collection Room ~~will not be~~ is not completed. A ~~temporary room~~Ventilated Storage Room ~~will be~~ is constructed in the UF_6 Handling Area for storage of contaminated material until the Solid Waste Collection Room is complete. Operations conducted in the Solid Waste Collection Room (other than storage) ~~will not be~~ is not conducted. Therefore, this accident sequence has no consequences exceeding 10 CFR 70.61.	The Solid Waste Collection Room ~~will not be~~ is not completed. A ~~temporary room~~Ventilated Storage Room ~~will be~~ is constructed in the UF_6 Handling Area for storage of contaminated material until the Solid Waste Collection Room is complete. Operations conducted in the Solid Waste Collection Room (other than storage) ~~will not be~~ is not conducted. Therefore, this accident sequence has no consequences exceeding 10 CFR 70.61.	Applicable	LBDCR-10-0045 LBDCR-10-0045 LBDCR-10-0033 LBDCR-10-0002

Table 4-1 *(Table 3.7-2)* Affected Accident Sequence Descriptions

Accident Sequence	Description and Applicable IROFS	Justification			
		Initial Plant Operations (IPO)	Production Phase 1	Production Phase 2	
LW1-1	Accumulation of sufficient uranium mass in the degreaser water collection tank resulting in a criticality event. • (IROFS19a) Administratively limit the calculated tank uranic mass inventory using bookkeeping procedures to determine calculated tank uranic mass inventory prior to transfer • (IROFS19c) Administratively limit measured tank uranic mass inventory to ensure a subcritical mass by performing independent sampling and measurement independent of IROFS19d • (IROFS19d) Administratively limit measured tank uranic mass inventory to ensure a subcritical mass by performing independent sampling and measurement independent of IROFS19c	The Liquid Effluent Collection and Treatment System ~~will not be~~ is not available. Liquid waste ~~will be~~ is collected, but ~~will not be~~ is not processed. Therefore the U content cannot accumulate in the tank. This accident sequence is not applicable.	The Liquid Effluent Collection and Treatment System ~~will not be~~ is not available. Liquid waste ~~will be~~ is collected, but ~~will not be~~ is not processed. Therefore the U content cannot accumulate in the tank. This accident sequence is not applicable.	Applicable	LBDCR-10-0045 LBDCR-10-0045 LBDCR-10-0002
LW1-2	This accident sequence is identical to sequence FR1.1, except it is located in the liquid effluent collection and treatment system. • (IROFS14a) Administratively restrict proximity of vessels in non-designed locations containing enriched uranic material by verifying the use of a safe-by-design transfer frame prior to movement of the associated waste container containing enriched uranic material	The Liquid Effluent Collection and Treatment System ~~will not be~~ is not available. Liquid waste ~~will be~~ is collected, but ~~will not be~~ is not processed. Therefore the U content cannot accumulate in the tank. This accident sequence is not applicable.	The Liquid Effluent Collection and Treatment System ~~will not be~~ is not available. Liquid waste ~~will be~~ is collected, but ~~will not be~~ is not processed. Therefore the U content cannot accumulate in the tank. This accident sequence is not applicable.	Applicable	

Table 4-1 *(Table 3.7-2)* Affected Accident Sequence Descriptions

Accident Sequence	Description and Applicable IROFS	Justification			
		Initial Plant Operations (IPO)	Production Phase 1	Production Phase 2	
LW1-3	This accident sequence is identical to sequence FR1.2, except it is located in the liquid effluent collection and treatment system. • (IROFS14b) Administratively restrict proximity of vessels in non-designed locations containing enriched uranic material by verifying the associated storage array condition is acceptable, prior to moving a waste container within 180 cm of the associated storage array	The Liquid Effluent Collection and Treatment System ~~will not be~~ is not available. Liquid waste ~~will be~~ is collected, but ~~will not be~~ is not processed. Therefore the U content cannot accumulate in the tank. This accident sequence is not applicable.	The Liquid Effluent Collection and Treatment System ~~will not be~~ is not available. Liquid waste ~~will be~~ is collected, but ~~will not be~~ is not processed. Therefore the U content cannot accumulate in the tank. This accident sequence is not applicable.	Applicable	LBDCR-10-0045 LBDCR-10-0045 LBDCR-10-0002
LW2-1	Accumulation of sufficient uranium mass in the spent citric acid tank to cause criticality. • (IROFS19a) Administratively limit the calculated tank uranic mass inventory using bookkeeping procedures to determine calculated tank uranic mass inventory prior to transfer • (IROFS19c) Administratively limit measured tank uranic mass inventory to ensure a subcritical mass by performing independent sampling and measurement independent of IROFS19d • (IROFS19d) Administratively limit measured tank uranic mass inventory to ensure a subcritical mass by performing independent sampling and measurement independent of IROFS19c	The Liquid Effluent Collection and Treatment System ~~will not be~~ is not available. Liquid waste ~~will be~~ is collected, but ~~will not be~~ is not processed. Therefore the U content cannot accumulate in the tank. This accident sequence is not applicable.	The Liquid Effluent Collection and Treatment System ~~will not be~~ is not available. Liquid waste ~~will be~~is collected, but ~~will not be~~is not processed. Therefore the U content cannot accumulate in the tank. This accident sequence is not applicable.	Applicable	

Table 4-1 *(Table 3.7-2)* Affected Accident Sequence Descriptions

Accident Sequence	Description and Applicable IROFS	Justification			
		Initial Plant Operations (IPO)	Production Phase 1	Production Phase 2	
LW3-1	Accumulation of sufficient uranium mass in the miscellaneous effluent collection tank to cause criticality. • (IROFS19a) Administratively limit the calculated tank uranic mass inventory using bookkeeping procedures to determine calculated tank uranic mass inventory prior to transfer • (IROFS19c) Administratively limit measured tank uranic mass inventory to ensure a subcritical mass by performing independent sampling and measurement independent of IROFS19d • (IROFS19d) Administratively limit measured tank uranic mass inventory to ensure a subcritical mass by performing independent sampling and measurement independent of IROFS19c	The Liquid Effluent Collection and Treatment System ~~will not be~~ is not available. Liquid waste ~~will be~~ is collected, but ~~will not be~~ is not processed. Therefore the U content cannot accumulate in the tank. This accident sequence is not applicable.	The Liquid Effluent Collection and Treatment System ~~will not be~~ is not available. Liquid waste ~~will be~~ is collected, but ~~will not be~~ is not processed. Therefore the U content cannot accumulate in the tank. This accident sequence is not applicable.	Applicable	LBDCR-10-0045 LBDCR-10-0045
LW5-1	Accumulation of sufficient uranium mass in the precipitation treatment tank to cause criticality. • (IROFS19a) Administratively limit the calculated tank uranic mass inventory using bookkeeping procedures to determine calculated tank uranic mass inventory prior to transfer • (IROFS19c) Administratively limit measured tank uranic mass inventory to ensure a subcritical mass by performing independent sampling and measurement independent of IROFS19d • (IROFS19d) Administratively limit measured tank uranic mass inventory to ensure a subcritical mass by performing independent sampling and measurement independent of IROFS19c	The Liquid Effluent Collection and Treatment System ~~will not be~~ is not available. Liquid waste ~~will be~~ is collected, but ~~will not be~~ is not processed. Therefore the U content cannot accumulate in the tank. This accident sequence is not applicable.	The Liquid Effluent Collection and Treatment System ~~will not be~~ is not available. Liquid waste ~~will be~~ iscollected, but ~~will not be~~ is not processed. Therefore the U content cannot accumulate in the tank. This accident sequence is not applicable.	Applicable	LBDCR-10-0002

Table 4-1 *(Table 3.7-2)* Affected Accident Sequence Descriptions

Accident Sequence	Description and Applicable IROFS	Justification			
		Initial Plant Operations (IPO)	Production Phase 1	Production Phase 2	LBDCR-10-0045
RD1-1	The initiating event is the placement of product 30B cylinders into a non-safe criticality interaction arrangement (i.e., a non-analyzed condition) resulting in a criticality event. • (IROFS45) Prior to moving a cylinder containing enriched uranium in the CRDB or the Blending and Liquid Sampling Area, verify that the stored cylinders containing enriched uranium in are in a horizontal, co-planar (i.e., non-stacked), condition and that no other cylinder containing enriched uranium is in movement in the associated area	Cylinders ~~will be~~ are stored in the Stations. There ~~will be~~ is no product cylinder movement (in addition, 48X cylinders ~~will not be~~ are not used at LES).	Applicable	Applicable	LBDCR-10-0002

Table 4-2 *(Tables 3.7-4)* Affected External Events and Fire Accident Descriptions LBDCR-10-0033

Accident Sequence	Description and Applicable IROFS	Justification		
		Initial Plant Operations (IPO)	Production Phase 1	Production Phase 2
EE-LP-CRDB BUNKER (T)	Flooding due to local intense precipitation of areas containing UF_6 process systems results in a UF_6 release from process systems excluding the SBMs. • (IROFS27c) Design feature of buildings containing UF_6 process systems for seismic, tornado, tornado missile, high wind, roof snow load, and roof ponding and site flooding due to local intense precipitation, to ensure UF_6 process systems integrity	The CRDB ~~will not be~~ is not available, so there is no MAR in the building. Therefore, this accident sequence has no consequences exceeding 10 CFR 70.61.	Applicable	Applicable
EE-LP-CRDB BUNKER (CR)	Flooding due to local intense precipitation of areas containing enriched uranic material results in a criticality event excluding the SBMs. • (IROFS27a) Design feature of buildings containing enriched uranic material for roof ponding and site flooding due to local intense precipitation, to ensure associated building area sub criticality • (IROFS27b) Design feature of buildings containing enriched uranic material for roof ponding and site flooding due to local intense precipitation, to ensure associated building area sub criticality	The CRDB ~~will not be~~ is not available, so there is no MAR in the building. Therefore, this accident sequence has no consequences exceeding 10 CFR 70.61.	Applicable	Applicable

LBDCR-10-0045

LBDCR-10-0002

Table 4-2 *(Tables 3.7-4)* Affected External Events and Fire Accident Descriptions LBDCR-10-0033

Accident Sequence	Description and Applicable IROFS	Justification		
		Initial Plant Operations (IPO)	Production Phase 1	Production Phase 2
EE-LP-SBM-CRDB SHELL	Flooding due to local intense precipitation of areas containing UF_6 process systems and potential UF_6 release from process systems. • (IROFS27e) design feature of buildings containing UF_6 process systems for seismic, tornado, high wind, roof snow load, and roof ponding and site flooding due to local intense precipitation, to ensure that a chemical release does not exceed the 10 CFR 70.61 performance requirements	The CRDB ~~will not be~~ is not available, so there is no MAR in the building. Therefore, this accident sequence has no consequences exceeding 10 CFR 70.61. This Sequence is applicable to the SBM for all phases.	Applicable	Applicable
EE-SNOW-CRDB BUNKER	Excessive snow load on roofs containing UF_6 process system leading to roof failure and UF_6 release from process systems • (IROFS27c) Design feature of buildings for seismic, tornado, tornado missile, high wind, roof snow load, and for roof ponding and site flooding due to local intense precipitation, to ensure UF6 process systems integrity	The CRDB ~~will not be~~ is not available, so there is no MAR in the building. Therefore, this accident sequence has no consequences exceeding 10 CFR 70.61.	Applicable	Applicable

LBDCR-10-0045

LBDCR-10-0002

Table 4-2 *(Tables 3.7-4)* Affected External Events and Fire Accident Descriptions LBDCR-10-0033

Accident Sequence	Description and Applicable IROFS	Justification		
		Initial Plant Operations (IPO)	Production Phase 1	Production Phase 2
EE-SNOW-SBM-CRDB SHELL	Excessive snow load on roofs containing UF_6 process system leading to roof failure and UF_6 release from process systems • (IROFS27e) design feature of buildings containing UF_6 process systems for seismic, tornado, high wind, roof snow load, and roof ponding and site flooding due to local intense precipitation, to ensure that a chemical release does not exceed the 10 CFR 70.61 performance requirements	The CRDB ~~will not be~~ is not -available, so there is no MAR in the building. Therefore, this accident sequence has no consequences exceeding 10 CFR 70.61. This Sequence is applicable to the SBM for all phases.	Applicable	Applicable
EE-TORNADO, TORNADO MISSILE, & HIGH WIND-CRDB BUNKER	Excessive tornado, tornado missile and high wind loads leading to building failure at areas containing UF_6 process systems and potential UF_6 release from process systems. This excludes the SBMs. • (IROFS27c) Design feature of buildings for seismic, tornado, tornado missile, high wind, roof snow load, and for roof ponding and site flooding due to local intense precipitation, to ensure UF6 process systems integrity	The CRDB ~~will not be~~ is not available, so there is no MAR in the building. Therefore, this accident sequence has no consequences exceeding 10 CFR 70.61.	Applicable	Applicable

LBDCR-10-0045

LBDCR-10-0002

Table 4-2 *(Tables 3.7-4)* Affected External Events and Fire Accident Descriptions LBDCR-10-0033

Accident Sequence	Description and Applicable IROFS	Justification		
		Initial Plant Operations (IPO)	Production Phase 1	Production Phase 2
EE-TORNADO & HIGH WIND-SBM-CRDB SHELL	Excessive tornado and high wind loads leading to building failure at areas containing UF_6 process systems and potential UF_6 release from process systems. • (IROFS27e) design feature of buildings containing UF_6 process systems for seismic, tornado, high wind, roof snow load, and roof ponding and site flooding due to local intense precipitation, to ensure that a chemical release does not exceed the 10 CFR 70.61 performance requirements	The CRDB ~~will not be~~ is not available, so there is no MAR in the building. Therefore, this accident sequence has no consequences exceeding 10 CFR 70.61. This Sequence is applicable to the SBM for all phases.	Applicable	Applicable
EE-TORNADO MISSILE -SBM-CRDB SHELL & BUNKER WORKER	Excessive tornado and high wind loads leading to building failure at areas containing UF_6 process systems and potential UF_6 release from process systems. • (IROFS39d) preemptive worker evacuation for tornados.	The CRDB ~~will not be~~ is not available, so there is no MAR in the building. Therefore, this accident sequence has no consequences exceeding 10 CFR 70.61. This Sequence is applicable to the SBM for all phases.	Applicable	Applicable
EE-TORNADO MISSILE – SBM-PUBLIC	Excessive tornado missile loads leading to failure and impacts on UF_6 process systems leading to UF_6 release. • (IROFS28) provides protection of the autoclaves against the tornado missile loads and containment of uranic material within the autoclaves (i.e. no release from the cylinders in the autoclaves)	Product Liquid Sampling System (autoclave) ~~will not be~~ is not available.	Applicable	Applicable

LBDCR-10-0045

LBDCR-10-0002

Table 4-2 *(Tables 3.7-4)* Affected External Events and Fire Accident Descriptions LBDCR-10-0033

Accident Sequence	Description and Applicable IROFS	Justification		
		Initial Plant Operations (IPO)	Production Phase 1	Production Phase 2
EE-SEISMIC-CRDB SHELL	Excessive seismic motion imposed on CRDB supersturcture, beyond normal building code design could lead to building collapse, breaching of UF_6 cylinders, or damage to the Bunkered Area, and ultimately a UF_6 release. • (IROFS27e) design feature of buildings containing UF_6 process systems for seismic, tornado, high wind, roof snow load, and roof ponding and site flooding due to local intense precipitation, to ensure that a chemical release does not exceed the 10 CFR 70.61 performance requirements	The CRDB ~~will not be~~ is not available, so there is no MAR in the building. Therefore, this accident sequence has no consequences exceeding 10 CFR 70.61.	Applicable	Applicable
EE-SEISMIC-CRDB BUNKER	Excessive seismic motion imposed on CRDB Bunkered Area, beyond normal building code design could lead to building collapse, breaching of UF_6 cylinders, or other uranic material storate containers, damage to systems and interior IROFS, and ultimately a UF_6 release. • (IROFS27c) Design feature of buildings for seismic, tornado, tornado missile, high wind, roof snow load, and for roof ponding and site flooding due to local intense precipitation, to ensure UF6 process systems integrity	The CRDB ~~will not be~~ is not available, so there is no MAR in the building. Therefore, this accident sequence has no consequences exceeding 10 CFR 70.61.	Applicable	Applicable

LBDCR-10-0045

LBDCR-10-0002

Table 4-2 *(Tables 3.7-4)* Affected External Events and Fire Accident Descriptions LBDCR-10-0033

Accident Sequence	Description and Applicable IROFS	Justification		
		Initial Plant Operations (IPO)	Production Phase 1	Production Phase 2
EE-SEISMIC-SBM IROFS28 only	A seismic event leads to building failure and impacts on centrifuges, piping, and autoclaves leading to UF_6 release. ▪ (IROFS28) provides protection of the autoclaves against the tornado missile loads and containment of uranic material within the autoclaves (i.e. no release from the cylinders in the autoclaves)	This Accident Sequence is applicable to the SBM for all phases. *Regarding IROFS28:* The autoclave ~~will not be~~ is not available; therefore, there is no hazard due to the autoclave so IROFS28 is not required. IROFS27e and IROFS41 are required to ensure no consequences exceeding 10 CFR 70.61.	Applicable	Applicable
FF6-1	Fire in the general CRDB Area • (IROFS35) Automatic closure of fire-rated barrier opening protectives (e.g., doors, dampers, penetration seals) to ensure the integrity of area fire barriers prevents fires from propagating into areas containing uranic material.	The CRDB ~~will not be~~ is not available, so there is no MAR in the building. Therefore, this accident sequence has no consequences exceeding 10 CFR 70.61.	Applicable	Applicable

LBDCR-10-0045

LBDCR-10-0002

Table 4-2 *(Tables 3.7-4)* Affected External Events and Fire Accident Descriptions LBDCR-10-0033

Accident Sequence	Description and Applicable IROFS	Justification		
		Initial Plant Operations (IPO)	Production Phase 1	Production Phase 2
FF6-2	Fire involving excessive transient combustibles within the area resulting in a release of UF_6. • (IROFS36a) Administratively limit transient combustible loading to ensure integrity of uranic material components/containers and limit the quantity of uranic material at risk to ensure consequences to the public are low.	The CRDB ~~will not be~~ is not available, so there is no MAR in the building. Therefore, this accident sequence has no consequences exceeding 10 CFR 70.61.	Applicable	Applicable
FF24-1	Fire propogating into the area resulting in a release of UF_6. • (IROFS35) Automatic closure of fire-rated barrier opening protectives (e.g., doors, dampers, penetration seals) to ensure the integrity of area fire barriers prevents fires from propagating into areas containing uranic material.	The ventilated room ~~will not be~~ is not completed. A ~~temporary room~~Ventilated Storage Room ~~will be~~ is constructed in the UF_6 Handling Area for storage of contaminated material until the Ventilated Room is complete. Operations conducted in the ventilated room (other than storage) ~~will not be~~ is not conducted in the ~~temporary room~~Ventilated Storage Room. Therefore, this accident sequence has no consequences exceeding 10 CFR 70.61.	Applicable	Applicable

LBDCR-10-0045

LBDCR-10-0002

LBDCR-10-0033

Table 4-2 *(Tables 3.7-4)* Affected External Events and Fire Accident Descriptions LBDCR-10-0033

Accident Sequence	Description and Applicable IROFS	Justification		
		Initial Plant Operations (IPO)	Production Phase 1	Production Phase 2
FF25-1	Fire involving excessive transient combustibles within the area that could result in a release of the uranium inventory • (IROFS36d) Administratively limit transient combustible loading in areas containing uranic material to ensure integrity of uranic material components/containers and limit the quantity of uranic material at risk	The ventilated room ~~will not be~~ is not completed. A ~~temporary room~~Ventilated Storage Room ~~will be~~ is constructed in the UF_6 Handling Area for storage of contaminated material until the Ventilated Room is complete. Operations conducted in the ventilated room (other than storage) ~~will not be~~ is not conducted in the ~~temporary room~~Ventilated Storage Room. Therefore, this accident sequence has no consequences exceeding 10 CFR 70.61.	Applicable	Applicable

LBDCR-10-0045

LBDCR-10-0002

LBDCR-10-0033

Table 4-2 *(Tables 3.7-4)* Affected External Events and Fire Accident Descriptions LBDCR-10-0033

Accident Sequence	Description and Applicable IROFS	Justification			
		Initial Plant Operations (IPO)	Production Phase 1	Production Phase 2	LBDCR-10-0045
FF25-2	Fire involving excessive transient combustibles within the area resulting in a release of UF_6. • (IROFS36d) Administratively limit transient combustible loading in areas containing uranic material to ensure integrity of uranic material components/containers and limit the quantity of uranic material at risk • (IROFS37) Automatic trip of the Ventilated Room HVAC and isolation fromCRD GEVS on smoke detection and limited Ventilated Room design leakage	The ventilated room ~~will not be~~ is not completed. A ~~temporary room~~Ventilated Storage Room ~~will be~~ is constructed in the UF_6 Handling Area for storage of contaminated material until the Ventilated Room is complete. Operations conducted in the ventilated room (other than storage) ~~will not be~~ is not conducted in the ~~temporary room~~Ventilated Storage Room. Therefore, this accident sequence has no consequences exceeding 10 CFR 70.61.	Applicable	Applicable	LBDCR-10-0002 LBDCR-10-0033
FF-43-1	Fire involving excessive transient combustibles on the UBC Storage Pad (failure of IROFS36e: administratively limit transient combustible loading on the UBC Storage Pad to ensure cylinder integrity). • (IORFS36e) Administratively limit transient combustible loading on the UBC Storage Pad to ensure cylinder integrity – vehicles with a fuel capacity limit of less than 280 L (74 gal) and maintaining storage pad drain-off to ensure no excessive fuel pooling.	The UBC Storage Pad will not be operational for the duration of IPO.	Applicable	Applicable	LBDCR-10-0045

Table 4-2 *(Tables 3.7-4)* Affected External Events and Fire Accident Descriptions LBDCR-10-0033

Accident Sequence	Description and Applicable IROFS	Justification		
		Initial Plant Operations (IPO)	Production Phase 1	Production Phase 2
OC1-1	Fire in a construction site preparations vehicle located near the UBC Storage Pad resulting from an impact or failure of an item construction vehicle (e.g., ruptured fuel line, electrical short). • (IROFS50a) Administratively control proximity of site preparations vehicles around the UBC Storage Pad to prevent a fire from an impact with UBCs resulting in a release of UF_6. • (IROFS50h) Administratively control proximity of site preparations vehicles around the UBC Storage Pad to prevent a fire from an impact with UBC resulting in a release of UF_6.	The UBC Storage Pad Construction is not complete and no cylinders are stored there for the duration of IPO	Applicable	Applicable

LBDCR-10-0045

~~4.4.2~~4.1.2 IROFS

LBDCR-10-0033

Table ~~3.9~~4-3 identifies IROFS and the affected Accident Sequence that are not applicable for each Phased Operation sequence. A description of the IROFS and justification for it not being applicable is provided in the specific Phased Operation sequence column: LBDCR-10-0007

Table 4-3 *(Table 3.8-1)* Affected IROFS

IROFS	Affected Accident Sequence	Description	Justification			
			Initial Plant Operations (IPO)	Production Phase 1	Production Phase 2	LBDCR-10-0045
IROFS1	PB2-1	Automatic trip of defrost heater and fan on high air return temperature to ensure cylinder integrity (Product Blending)	Product Blending and Sampling System not available.	Applicable	Applicable	
IROFS2	PB2-1	Automatic trip of defrost heater and fan on high station internal air temperature to ensure cylinder integrity (Product Blending)	Product Blending and Sampling System not available.	Applicable	Applicable	
IROFS3	PB3-3 VR1-1 VR1-5	Automatic trip of the vacuum pump on carbon trap high weight (Blending and Sampling Vent Subsystem, Ventilated Room Cylinder Pressure Test & Pump Out Rig)~~,~~	Product Blending and Sampling System not available. Ventilated Room not available.	Applicable	Applicable	LBDCR-10-0045
IROFS4	PB1-1	Automatic trip of station heaters on high station internal air temperature to ensure cylinder integrity (independent and diverse from IROFS5)	Product Blending and Sampling System not available.	Applicable	Applicable	
IROFS5	PB1-1	Automatic trip of station heaters on high station internal air temperature to ensure cylinder integrity (independent and diverse from IROFS4)	Product Blending and Sampling System not available.	Applicable	Applicable	
IROFS10	PB4-1 PB4-3 PB4-4	Design feature to maintain Product Liquid Sampling Autoclave leak tight integrity	Product Liquid Sampling System ~~will not be~~ is not available.	Applicable	Applicable	LBDCR-10-0002

Table 4-3 *(Table 3.8-1)* Affected IROFS

IROFS	Affected Accident Sequence	Description	Justification			
			Initial Plant Operations (IPO)	Production Phase 1	Production Phase 2	LBDCR-10-0045
IROFS11	PB4-2	Automatic trip of the autoclave heater and fan on autoclave high internal air temperature	Product Liquid Sampling System ~~will not be~~ is not available.	Applicable	Applicable	
IROFS12	PB4-2	Automatic trip of the autoclave heater and fan on autoclave high internal air pressure	Product Liquid Sampling System ~~will not be~~ is not available.	Applicable	Applicable	
IROFS14a	FR1-1 FR2-1 DS1-1 DS2-1 DS3-1 SW1-1 LW1-2	Administratively restrict proximity of vessels in non.designed locations containing enriched uranic material by verifying the use of a safe.by.design transfer frame prior to movement of the associated waste container containing enriched uranic material. (IROFS14a is applicable to new accident sequence TVR1-2, See Tables 4-4 and 4-5 below.)	PFPE Oil Recovery System ~~will not be~~ is not available. Decontamination Workshop ~~will not be~~ is not available. Solid Waste Collection Room ~~will not be~~ is not available. Liquid Effluent Collection and Treatment System ~~will not be~~ is not available.	PFPE Oil Recovery System ~~will not be~~ is not available. Decontamination Workshop ~~will not be~~ is not available. Solid Waste Collection Room ~~will not be~~ is not available. Liquid Effluent Collection and Treatment System ~~will not be~~ is not available.	Applicable	LBDCR-10-0002 LBDCR-10-0045 LBDCR-10-0007

Table 4-3 *(Table 3.8-1)* Affected IROFS

IROFS	Affected Accident Sequence	Description	Justification			
			Initial Plant Operations (IPO)	Production Phase 1	Production Phase 2	
IROFS14b	FR1-2 FR2-2 DS1-2 DS2-2 DS3-2 SW1-2 LW1-3	Administratively restrict proximity of vessels in non-designed locations containing enriched uranic material by verifying, prior to moving a waste container enriched uranium materials within 180 cm of the associated storage array. (IROFS14b is applicable to new accident sequence TVR1-3, See Tables 4-4 and 4-5 below.)	PFPE Oil Recovery System ~~will not be~~ is not available. Decontamination Workshop ~~will not be~~ is not available. Solid Waste Collection Room ~~will not be~~ is not available. Liquid Effluent Collection and Treatment System ~~will not be~~ is not available.	PFPE Oil Recovery System ~~will not be~~ is not available. Decontamination Workshop ~~will not be~~ is not available. Solid Waste Collection Room ~~will not be~~ is not available. Liquid Effluent Collection and Treatment System ~~will not be~~ is not available.	Applicable	LBDCR-10-0045 LBDCR-10-0045 LBDCR-10-0002 LBDCR-10-0007
IRFOS15	PT3-5	Administratively restrict an independent parameter of the criticality sequence to ensure subcritical configuration by preventing additional transfer of enriched uranic material to another container if that container contains enriched uranic material and is a non-safe-by-design container.	PT3-5 is specific to washing flex hoses, emptying carbon traps, draining oil from product pumps, and scraping breakdown materials from product pump internals. None of these decontamination activities will be conducted during IPO.	PT3-5 is specific to washing flex hoses, emptying carbon traps, draining oil from product pumps, and scraping breakdown materials from product pump internals. None of these decontamination activities will be conducted during Production Phase 1.	Applicable	LBDCR-10-0045

Table 4-3 *(Table 3.8-1)* Affected IROFS

IROFS	Affected Accident Sequence	Description	Justification			
			Initial Plant Operations (IPO)	Production Phase 1	Production Phase 2	LBDCR-10-0045
IROFS16a	PB2-2	Administratively limit moderator mass (oil and water) in cylinders containing enriched uranic material by limiting cylinder vapor pressure prior to introducing product	Product Blending and Sampling System not available.	Applicable	Applicable	
IROFS19a	DS1-3 DS2.3 LW1-1 LW2-1 LW3-1 LW5-1	Administratively limit the calculated tank uranic mass inventory using bookkeeping procedures to determine calculated tank uranic mass inventory prior to transfer	Decontamination Workshop ~~will not be~~ is not available. Liquid Effluent Collection and Treatment System ~~will not be~~ is not available.	Decontamination Workshop ~~will not be~~ is not available. Liquid Effluent Collection and Treatment System ~~will not be~~ is not available.	Applicable	LBDCR-10-0002
IROFS19c	DS1-3 DS2.3 LW1-1 LW2-1 LW3-1 LW5-1	Administratively limit measured tank uranic mass inventory to ensure a subcritical mass by performing independent sampling and measurement independent of IROFS19d	Decontamination Workshop ~~will not be~~ is not available. Liquid Effluent Collection and Treatment System ~~will not be~~ is not available.	Decontamination Workshop ~~will not be~~ is not available. Liquid Effluent Collection and Treatment System ~~will not be~~ is not available.	Applicable	LBDCR-10-0045

Table 4-3 *(Table 3.8-1)* Affected IROFS

IROFS	Affected Accident Sequence	Description	Justification			
			Initial Plant Operations (IPO)	Production Phase 1	Production Phase 2	
IROFS19d	DS1-3 DS2.3 LW1-1 LW2-1 LW3-1 LW5-1	Administratively limit measured tank uranic mass inventory to ensure a subcritical mass by performing independent sampling and measurement independent of IROFS19c	Decontamination Workshop ~~will not be~~ is not available. Liquid Effluent Collection and Treatment System ~~will not be~~ is not available.	Decontamination Workshop ~~will not be~~ is not available. Liquid Effluent Collection and Treatment System ~~will not be~~ is not available.	Applicable	LBDCR-10-0045 LBDCR-10-0002
IROFS20	CL3-1	Automatic isolation of cold trap on cold trap high temperature	Sub-Sampling System ~~will not be~~ is not available.	Applicable	Applicable	
IROFS21	VR1-1 VR1-2 CL3-1	Automatic trip of the CRDB GEVS on ^{235}U selective high.high gamma	Ventilated Room not available. Sub-Sampling System ~~will not be~~ is not available.	Applicable	Applicable	
IROFS22	VR1-2	Automatic trip of the vacuum pump on carbon trap high temperature	Ventilated Room not available.	Applicable	Applicable	
IROFS23a	VR1-3	Administrative use of personnel respiratory protection when performing positive pressure testing of a UF_6 cylinder after repair/replacement of a leaking cylinder component	Ventilated Room not available.	Applicable	Applicable	
IROFS23b	VR2-1 VR2-2	Administrative use of personnel respiratory protection	Ventilated Room not available.	Applicable	Applicable	

Table 4-3 *(Table 3.8-1)* Affected IROFS

IROFS	Affected Accident Sequence	Description	Justification			
			Initial Plant Operations (IPO)	Production Phase 1	Production Phase 2	
IROFS24a	VR2-2	Administrative establishment of airflow away from the worker	Ventilated Room not available.	Applicable	Applicable	LBDCR-10-0045
IROFS24b	CL3-2 CL3-3	Administrative establishment of air flow away from the worker	Chemistry Lab (Sub-Sampling System) ~~will not be~~ is not available.	Applicable	Applicable	LBDCR-10-0045
IROFS27a	EE-LP-CRDB BUNKER	Design feature of buildings containing enriched uranic material for roof ponding and site flooding due to local intense precipitation, to ensure associated building area sub criticality	CRDB ~~will not be~~ is not available.	Applicable	Applicable	LBDCR-10-0002
IROFS27b	EE-LP-CRDB BUNKER	Design feature of buildings containing enriched uranic material for roof ponding and site flooding due to local intense precipitation, to ensure associated building area sub criticality	CRDB ~~will not be~~ is not available.	Applicable	Applicable	
IROFS27c	EE-LP-CRDB BUNKER EE-SNOW-CRDB BUNKER EE-TORNADO, TORNADO MISSILE, & HIGH WIND-CRDB BUNKER EE-SEISMIC-CRDB BUNKER	Design feature of buildings containing UF_6 process systems for seismic, tornado, tornado missile, high wind, roof snow load, and roof ponding and site flooding due to local intense precipitation, to ensure UF_6 process systems integrity	CRDB ~~will not be~~ is not available.	Applicable	Applicable	LBDCR-10-0002

Table 4-3 *(Table 3.8-1)* Affected IROFS

IROFS	Affected Accident Sequence	Description	Justification			
			Initial Plant Operations (IPO)	Production Phase 1	Production Phase 2	LBDCR-10-0045
IROFS27e	EE-SNOW-SBM-CRDB SHELL EE-LP-SBM-CRDB SHELL EE-TORNADO & HIGH WIND-SBM-CRDB SHELL EE-SEISMIC-CRDB SHELL	Design feature of SBMs and CRDB superstructure (not inculding the Bunkered Area) for seismic, tornado, high wind, roof snow load, roof ponding and site flooding due to local intense precipitation, to ensure a chemical release does not exceed the 10 CFR 70.61 performance requirements.	CRDB ~~will not be~~ is not available. This IROFS applies to the SBM for all phases.	Applicable	Applicable	
IROFS28	EE-SEISMIC-SBM EE-TORNADO-MISSILE-SBM-PUBLIC	Design feature to maintain Product Liquid Sampling Autoclave leak tight integrity. Note: IROFS28 is required to enable EE-SEISMIC-SBM to meet the performance requirements of 10 CFR 70.61. IROFS28 only protects the autoclaves. While the autoclaves are not installed and operable, then the hazard IROFS28 is preventing does not exist. The performance requirements of 10 CFR 70.61 continue to be met.	Product Liquid Sampling System ~~will not be~~ is not available. Autoclaves ~~will not be~~ is not available.	Applicable	Applicable	LBDCR-10-0002
IROFS30a	PB2-6	Administratively limit hydrocarbon oil (moderator mass) to ensure moderation control assumptions are maintained by controlling the type of oil used in process vacuum pumps	Ventilated Room not available. Product Blending and Sampling System not available.	Applicable	Applicable	

Table 4-3 *(Table 3.8-1)* Affected IROFS

IROFS	Affected Accident Sequence	Description	Justification			
			Initial Plant Operations (IPO)	Production Phase 1	Production Phase 2	LBDCR-10-0045
IROFS30b	PB2-6	Administratively verify, through testing prior to addition of oil, that process vacuum pump oil is not hydrocarbon oil	Ventilated Room not available. Product Blending and Sampling System not available.	Applicable	Applicable	
IROFS30c	PB2-6	Administratively verify, through testing after addition of oil, that process vacuum pump oil is not hydrocarbon oil	Ventilated Room not available. Product Blending and Sampling System not available.	Applicable	Applicable	
IROFS31a	VR2-7	Administratively limit ^{235}U mass in non-safe-by-design solid waste containers to ensure subcriticality by performing independent sampling and assay analysis (independent of IROFS31b). (IROFS31a is applicable to transitional accident sequence TVR1-1, See Tables 4-4 and 4-5 below.)	This operation ~~will not be~~ is not conducted as the ventilated room ~~will not be~~ is not available.	Applicable	Applicable	LBDCR-10-0007
IROFS31b	VR2-7	Administratively limit ^{235}U mass in non-safe-by-design solid waste containers to ensure subcriticality by performing independent sampling and assay analysis (independent of IROFS31a). (IROFS31b is applicable to transitional accident sequence TVR1-1, See Tables 4-4 and 4-5 below.)	This operation ~~will not be~~ is not conducted as the ventilated room ~~will not be~~ is not available.	Applicable	Applicable	LBDCR-10-0002 LBDCR-10-0007

Table 4-3 *(Table 3.8-1)* Affected IROFS

IROFS	Affected Accident Sequence	Description	Justification			
			Initial Plant Operations (IPO)	Production Phase 1	Production Phase 2	LBDCR-10-0045
IROFS31c	VR2-7	Administratively limit ^{235}U mass in non-safe-by-design solid waste containers to ensure subcriticality using bookkeeping procedures. (IROFS31c is applicable to transitional accident sequence TVR1-1, See Tables 4-4 and 4-5 below.)	This operation ~~will not be~~ is not conducted as the ventilated room ~~will not be~~ is not available.	Applicable	Applicable	LBDCR-10-0007
IROFS35	FF6-1 FF24-1	Fire barriers and automatic closure of fire-rated barriers opening protectives	CRDB not available Ventilated Room not available.	Applicable	Applicable	
IROFS36a	FF6-2	Administratively limit transient combustible loading in areas containing uranic material to ensure integrity of uranic material components/containers and limit the quantity of uranic material at risk to ensure consequences to the public are low.	CRDB not available	Applicable	Applicable	
IROFS36d	FF25-1 FF25-2	Administratively limit transient combustible loading in areas containing uranic material to ensure integrity of uranic material components/containers and limit the quantity of uranic material at risk to ensure consequences to the public are low.	Ventilated Room not available.	Applicable	Applicable	
IROFS36e	FF43-1	Administratively limit transient combustible loading on the UBC Storage Pad to ensure cylinder integrity.	UBS Storage Pad not available	Applicable	Applicable	LBDCR-10-0045
IROFS37	FF25-2	Automatic trip of the Ventilated Room HVAC and isolation from CRDB GEVS on smoke detection and limited Ventilated Room design leakage	Ventilated Room not available.	Applicable	Applicable	

Table 4-3 *(Table 3.8-1)* Affected IROFS

IROFS	Affected Accident Sequence	Description	Justification			
			Initial Plant Operations (IPO)	Production Phase 1	Production Phase 2	LBDCR-10-0045
IROFS38	PB2-4	Administratively limit the cylinder fill mass by verifying cylinder weight is within specified trending limits once per shift during filling of the cylinder	Product Liquid Sampling System ~~will not be~~ is not available.	Applicable	Applicable	LBDCR-10-0002
IROFS39d	EE-TORNADO MISSILE – SBM – CRDB SHELL & BUNKER WORKER (T)	Administratively limit exposure by requiring worker action to evacuate area(s) of concern to ensure worker consequences of inhalation of uranic material and HF are low.	This IROFS is applicable to the SBM for all phases. CRDB not available	Applicable	Applicable	
IROFS42	PB4-4	Administratively limit the cylinder fill mass prior to placement and heating	Product Liquid Sampling System ~~will not be~~ is not available.	Applicable	Applicable	LBDCR-10-0002
IROFS43	CL3.3	Automatic trip of UF_6 sub-sampling unit hotbox heater or high hotbox internal temperature	Chemistry Lab (Sub-Sampling System) ~~will not be~~ is not available.	Applicable	Applicable	
IROFS45	PB1.3 RD1-1	Prior to moving a cylinder containing enriched uranium in the CRDB or the Blending and Liquid Sampling Area, verify that the stored cylinders containing enriched uranium in are in a horizontal, co-planar (i.e., non-stacked), condition and that no other cylinder containing enriched uranium is in movement in the associated area	The CRDB and Product Liquid Sampling System ~~will not be~~ is not available.	Applicable	Applicable	LBDCR-10-0002
IROFS46	CL3.2	Administrative verification that product samples are in a solid state, prior to transfer	Chemistry Lab (Sub-Sampling System) ~~will not be~~ is not available.	Applicable	Applicable	

Table 4-3 *(Table 3.8-1)* Affected IROFS

IROFS	Affected Accident Sequence	Description	Justification			
			Initial Plant Operations (IPO)	Production Phase 1	Production Phase 2	LBDCR-10-0033 LBDCR-10-0045
IROFS47a	PB3-3	Flow restriction to ensure, in the event of a postulated release, worker consequences of inhalation of uranic material and HF are low	Cylinders ~~will be~~ are stored in the Stations. There ~~will be~~ are no blending operations conducted.	Applicable	Applicable	
IROFS47b	VR1-5	Flow restriction to ensure worker consequences of inhalation of uranic material and HF are low	Ventilated Room not available.	Applicable	Applicable	
IROFS50a	OC1-1	Administratively control proximity of site preparations vehicles around the UBC Storage Pad to prevent a fire from an impact with UBCs resulting in a release of UF_6.	UBC Storage Pad is not available	Applicable	Applicable	LBDCR-10-0045
IROFS50h	OC1-1	Administratively control proximity of site preparations vehicles around the UBC Storage Pad to prevent a fire from an impact with UBCs resulting in a release of UF_6.	UBC Storage Pad is not available	Applicable	Applicable	

4.1.3 Transitional Accident Sequence and Risk Index

Tables 4-4 and 4-5 identify accident sequences and the associated risk index for accident sequences identified as a result of temporary systems in place for Initial Plant Operations: LBDCR-10-0007

Table 4-4 Transitional Accident Sequence and Risk Index

Accident Identifier	Initiating Event Index	Preventive Safety Parameter 1 or IROFS 1 Failure Index	Preventive Safety Parameter 2 or IROFS 2 Failure Index	Mitigation IROFS Failure Index	Likelihood Index T Uncontrolled (U) / Controlled (C)	Likelihood Category	Conseq. Category (Type of Accident)	Risk Index (h=f x g) Uncontrolled (U) / Controlled (C)	Comments and Recommendations
	(a)	(b)	(c)	(d)	(e)	(f)	(g)	(h)	
TVR1-1	(IROFS31a) -1	N/A	N/A	N/A	-1 (U)	3	3 (CR)	9 (U)	IROFS Required
TVR1-1	(IROFS31a) -1	(IROFS31b) -2	(IROFS31c) -2	N/A	-5 (C)	1	3 (CR)	3 (C)	Acceptable Risk
TVR1-2	-2	N/A	N/A	N/A	-2 (U)	3	3 (CR)	9 (U)	IROFS Required
TVR1-2	-2	(IROFS14a) -3	N/A	N/A	-5 (C)	1	3 (CR)	3 (C)	Acceptable Risk
TVR1-3	-2	N/A	N/A	N/A	-2 (U)	3	3 (CR)	9 (U)	IROFS Required
TVR1-3	-2	(IROFS14b) -3	N/A	N/A	-5 (C)	1	3 (CR)	3 (C)	Acceptable Risk

LBDCR-10-0007

Table 4-5 Transitional Accident Sequence Descriptions

Accident Identifier: TVR1-1

The initiating event allows the accumulation of sufficient uranic mass to cause criticality in a contatiner. The initial condition isthe operator would transfer material containing enriched uranic material to a non-safe-by design containers and fails to control the uranic matter in the container, (i.e., failure of IROFS31a: administratively linit ^{235}U mass in non-safe-by-design containers to ensure sub criticality by performing independent sampling and analysis).

For the uncontrolled accident sequence, sufficient uranium mass accumulates in the container through transfer of material containg enriched uranic material from any source. A criticality event is assumed to result for this accident sequence. A criticality event is assumed to result in a high consequence to the worker and public.

For the controlled accident sequence, the preventive measures are: (1) administratively limit ^{235}U mass in non-safe-by-design containers to ensure a subcritical mass (IROFS31b, i.e., by independent sample and assay analysis to determine ^{235}U mass prior to tranferring and bulk storing enriched uranic material in containers) and (2) administratively limit the calculated ^{235}U mass waste storage to ensure a subcritical mass (IROFS31c, i.e., using bookkeeping procedures to determine the ^{235}U mass prior to transferring and bulk storing enriched uranic material in containers). For each preventive measure, if the acceptance criterion is not met, the transfer of enriched uranic material shall not be initiated. LBDCR-10-0007

The frequency index number for the initiating event (IROFS31a) was determined to be (-1). This frequency probability index corresponds to a failure of redundant IROFS per NUREG-1520.

A failure probability index of (-2) was selected for IROFS31b. This corresponds to an administrative IROFS for planned routine operation per NUREG-1520.

A failure probability index of (-2) was selected for IROFS31c. This corresponds to an administrative IROFS for planned routine operation per NUREG-1520.

Table 4-5 Transitional Accident Sequence Descriptions

Accident Identifier: TVR1-2

The accident sequence is the combination of numerous conditions assumed to lead to a criticality in a container being transported. This description of this sequence is the following:

(1) The fissile material in the container and interacting components would be auranyl fluoride/water mixture at an H/U atomic ration near optimum moderation,

(2) The container, as well as other interacting components, would be nearly or completely filled with the above material at a high enough enrichment to achieve a configuration favorable for criticality (Urenco European experience is that less than 10% of container enrichment is at product enrichment levels), and

(3) The container would have to interact (i.e., proximity limit not maintained) with greater than one component containing fissile material, as interaction of the container and one other component is subcritical.

LBDCR-10-0007

The movement of containers with uranic material is part of normal operations; the abnormal operating conition pertaining to the container concerns the assumption that the container and interacting component are filled with product UF6 breakdown material at optimum moderation conditions. This would be extremely unlikely for a single container and even more unlikely for more than one component.

For the uncontrolled accident sequence, conditions (1) through (3) above must be met to result in a potential criticality event. Fore this accident sequence,a criticality event was assumed. A criticality even is assumed to result in a high consequence to the worker and public.

For the controlled accident sequence, the preventive measure is to administratively restrict proximity of vessels in non-designed locations containing enriched uranic material to ensure subcritical configuration bv verifying the use of a safe-bv-design transfer frame prior to movement of the associated container containing enriched uranic material (IROFS14a). If the acceptance criteria is not met, then the associated container containing enriched uranic material shall not be moved.

The frequency index number for the initiating event was determined to be (-2). The NUREG-1 520 criteria - no failures of this type in this facility in 30 vrs – applies. This failure frequency index was selected based on evidence from history of similarly designed Urenco European plants, which have a combined plant history of greater than 30 vrs, and have not had a failure of this type.

A failure probability index of (-3) was selected for IROFS14a. This corresponds to an enhanced administrative IROFS per NUREG-1520. IROFS14a is enhanced bv requiring independent verification of the IROFS safety function. The IROFS justification for enhanced administrative control is discussed in Section 3.8.3.

Table 4-5 Transitional Accident Sequence Descriptions

Accident Identifier: TVR~~I~~1 -3

LBDCR-10-0033

The accident sequence is the combination of numerous conditions assumed to lead to a criticality in a container being stored. This description of this sequence is the following:

(1). The fissile material in the container and interacting components, would be a uranyl fluoride/water mixture at an HIU atomic ratio near optimum moderation,

LBDCR-10-0045

(2). ~~(2)~~ The container, as well as other interacting components, would be nearly or completely filled with the above material at a high enough enrichment to achieve a configuration favorable for criticality (Urenco European experience is that less than 10% of container enrichment is at product enrichment levels), and

(3). ~~(3)~~ The container would have to interact (i.e., proximity limit not maintained) with greater than one component containing fissile material, as ~~—~~interaction of the container and one other component is subcritical.

LBDCR-10-0007

For the uncontrolled accident sequence, conditions (1) through (3) above, above must be met to result in a potential criticality event. For this accident sequence, a criticality event was assumed. A criticality event is assumed to result in a high consequence to the worker and public.

For the controlled accident sequence, the preventive measure is administratively restrict proximity of vessels in non-designed locations containing enriched uranic material to ensure subcritical configuration by verifying, prior to moving a container containing enriched uranic material within 180 cm of the associated storage array, associated storage array condition is acceptable for storage of the container and no component containing enriched uranic material is in movement in the designated area (IROFS14b). If the acceptance criteria are not met, then the associated container shall not be moved.

The frequency index number for the initiating event was determined to be (-2). The NUREG-1 520 criteria - no failures of this type in this facility in 30 yrs - applies. This failure frequency index was selected based on evidence from history of similarly designed Urenco European plants, which have a combined plant history of greater than 30 yrs, and have not had a failure of this type.

A failure probability index of (-3) was selected for IROFS14b. This corresponds to an enhanced administrative IROFS per NUREG-1520. IROFS14b is enhanced by requiring independent verification of the IROFS safety function. The IROFS justification for enhanced administrative control is discussed in Section 3.8.3.

~~4.5SAFETY SIGNIFICANCE~~

~~Section 4.0 of the ISA Summary has been initially established as an administrative change to describe the Phased Operation concept. There is no safety significance because none of the identified changes will be finalized and implemented until reviewed and approved in accordance with the LES configuration management program as described in § 11.1 of the Safety Analysis Report Management Measures. Pursuant to 10 CFR 70.72, LES has established a system to evaluate, implement, and track each change to the site, structures, processes, systems, equipment, components, computer programs, and activities of personnel. Configuration management of IROFS, and any items that may affect the function of IROFS, is applied to all items identified within the scope of the IROFS boundary. All changes to structures, systems, equipment, components, and activities of personnel within the identified IROFS boundary are evaluated before the change is implemented. If the change requires an amendment to the License, Nuclear Regulatory Commission approval is received prior to implementation.~~ LBDCR-10-0033

~~All proposed changes described in Section 4.0 are tracked and evaluated per the LES configuration management program prior to implementation. As the changes are processed, Section 4.0 will be revised to incorporate changes to the facility, processes, and programs. Section 4.0 dcouments all site changes facilitated as a result of the Phased Operation approach.~~