PMSTPCOL PEmails

From: Wunder, George
Sent: Tuesday, January 19, 2010 4:19 PM
To: STPCOL
Subject: FW: Transmittal of Letter U7-C-STP-NRC-100009
Attachments: U7-C-STP-NRC-100009 (AIA).pdf

From: Elton, Loree [mailto:leelton@STPEGS.COM]
Sent: Wednesday, January 13, 2010 2:46 PM
To: Muniz, Adrian; Dyer, Linda; Wunder, George; Tonacci, Mark; Eudy, Michael; Plisco, Loren; Anand, Raj; Foster, Rocky; Joseph, Stacy; Govan, Tekia; Tai, Tom
Subject: Transmittal of Letter U7-C-STP-NRC-100009

Please find attached a courtesy copy of letter number U7-C-STP-NRC-100009, which provides a response to the Request for Additional Information (RAI) question 06.02.04-1 related to the application to amend the ABWR DCD Amendment Part 2, Tier 2, Section 6.7 "High Pressure Nitrogen Gas Supply System."

The official version of this correspondence will be placed in today's mail. Please call Fred Puleo at 979-241-1400 if you have any questions concerning this letter.

Thank you,

Loree Elton
Licensing, STP 3 & 4
leelton@stpegs.com
361-972-4644

Hearing Identifier: SouthTexas34Public_EX
Email Number: 2167

Mail Envelope Properties (DAC719623E968245BD52D0369611110023FD8540E9)

Subject: FW: Transmittal of Letter U7-C-STP-NRC-100009
Sent Date: 1/19/2010 4:19:11 PM
Received Date: 1/19/2010 4:19:13 PM
From: Wunder, George

Created By: George.Wunder@nrc.gov

Recipients:
"STPCOL" <STP.COL@nrc.gov>
Tracking Status: None

Post Office: HQCLSTR02.nrc.gov

Files	**Size**	**Date & Time**
MESSAGE	942	1/19/2010 4:19:13 PM
U7-C-STP-NRC-100009 (AIA).pdf	1487051	

Options
Priority: Standard
Return Notification: No
Reply Requested: No
Sensitivity: Normal
Expiration Date:
Recipients Received:

Nuclear Operating Company

South Texas Project Electric Generating Station P.O. Box 289 Wadsworth, Texas 77483

ABWR

January 13, 2010
U7-C-STP-NRC-100009

U. S. Nuclear Regulatory Commission
Attention: Document Control Desk
One White Flint North
11555 Rockville Pike
Rockville, MD 20852-2738

South Texas Project
Units 3 and 4
Docket Nos. 52-001
Response to Request for Additional Information

Reference: Letter, Mark McBurnett to Document Control Desk, "Application to Amend the Design Certification Rule for the U.S. Advanced Boiling Water Reactor (ABWR)," dated June 30, 2009, U7-C-STP-NRC-090070 (ML092040048).

This letter provides a response to Request for Additional Information (RAI) question 06.02.04-1 related to the application to amend the ABWR DCD Amendment Part 2, Tier 2, Section 6.7 "High Pressure Nitrogen Gas Supply System" provided in Attachment 1 to the referenced letter.

The attachment to this letter provides the following RAI question response:

06.02.04-1

Changes will be incorporated into the next update of the ABWR DCD Amendment request after review by the NRC Staff.

There are no commitments in this letter.

If you have any questions, please contact Scott Head at (361) 972-7136, or Bill Mookhoek at (361) 972-7274.

I declare under penalty of perjury that the foregoing is true and correct.

Executed on 1/13/2010

Mark McBurnett
Vice President, Oversight & Regulatory Affairs
South Texas Project Units 3 & 4

fjp

Attachment:

Question 06.02.04-1

cc: w/o attachments and enclosure except*

(paper copy)

Director, Office of New Reactors
U. S. Nuclear Regulatory Commission
One White Flint North
11555 Rockville Pike
Rockville, MD 20852-2738

Regional Administrator, Region IV
U. S. Nuclear Regulatory Commission
611 Ryan Plaza Drive, Suite 400
Arlington, Texas 76011-8064

Kathy C. Perkins, RN, MBA
Assistant Commissioner
Division for Regulatory Services
Texas Department of State Health Services
P. O. Box 149347
Austin, Texas 78714-9347

Alice Hamilton Rogers, P.E.
Inspection Unit Manager
Texas Department of State Health Services
P. O. Box 149347
Austin, Texas 78714-9347

C. M. Canady
City of Austin
Electric Utility Department
721 Barton Springs Road
Austin, TX 78704

*Steven P. Frantz, Esquire
A. H. Gutterman, Esquire
Morgan, Lewis & Bockius LLP
1111 Pennsylvania Ave. NW
Washington D.C. 20004

*George F. Wunder
* Tom Tai
Two White Flint North
11545 Rockville Pike
Rockville, MD 20852

(electronic copy)

*George F. Wunder
*Tom Tai
Loren R. Plisco
U. S. Nuclear Regulatory Commission

Steve Winn
Joseph Kiwak
Eli Smith
Nuclear Innovation North America

Jon C. Wood, Esquire
Cox Smith Matthews

J. J. Nesrsta
Kevin Pollo
L. D. Blaylock
CPS Energy

RAI 06.02.04-1

QUESTION

In attachment 1 of the application to amend the ABWR DCD, Figure 6.7-1, "High Pressure Nitrogen Gas Supply System P&ID" and Table 6.2-7,"Containment Isolation Valve Information for High Pressure Nitrogen Gas Supply System" are updated to reflect the addition of containment isolation valves P54-F301/F302 (spring check valve outside and check valve inside). Table 6.2-7 also shows that the normal position, the shutdown position, and the post-accident position of both valves are "Closed", and that the spring check valve P54-F301 operator is pneumatic and opens with nitrogen pressure. Please provide the additional details on the design and operation of these valves:

1. how are these valve controlled (manually with control switch or otherwise)?

2. is the position indicated in the control room?

3. clarify if the closure time for both valves is instantaneous as indicated in Table 6.2-7.

RESPONSE:

Because the additional nitrogen gas supply system as described in the initial DCD amendment submittal is not required to meet the AIA rule, that system is being removed from the DCD amendment, and consequently, all of the DCD amendment markups associated with that change are being deleted. As a result, there will no longer be a change to Figure 6.7-1 and Table 6.2-7 of the DCD for this amendment.

Summary of DCD Markups

As a result of this response, the following DCD markups that were provided in Version 0 of the AIA amendment submittal will be revised in Version 1:

- the two check valves F301 and F302 that were added to Table 3.9-8 are now removed,
- the last paragraph that was added to section 5.2.2.4.1 describing the additional nitrogen supply line is removed and that section no longer changes,
- the added Subsection 1.2.2.16.15 titled “Alternate Feedwater Injection (AFI) Pump House” is revised to remove the phrase “and additional SRV nitrogen supply”,
- the added sentence to the first paragraph of Subsection 6.7.2 describing the additional nitrogen storage bottle in the AFI Pump House is removed and that section no longer changes,
- Item 19.19l titled “Procedures to Depressurize the RPV from the AFI Pump House”, which was added to Table 1.9-1 is deleted,
- Items 19.19m and 19.19n for Table 1.9-1 are renamed as 19.19l and 19.19m, respectively,

- the added line item (e)(iv) to Subsection 14.2.12.1.28 for the High Pressure Nitrogen Gas System (HPIN) from the AFI Pump House is deleted, and that section no longer changes,
- the additional HPIN line is removed from Figure 6.2-38, and that figure no longer changes,
- the two added isolation valves F301 and F302 for the added HPIN line are now removed from Table 6.2-7 and that table no longer changes,
- the added penetration X-73 for the added HPIN is removed from Table 6.2-8, and that table no longer changes,
- the added penetration No. 60 for HPIN is removed from Table 6.2-9,
- the added penetration X-73 and the added footnote are removed from Table 6.2-10, and that table no longer changes,
- the added Subsection 19.9.32 "Procedures to Depressurize the RPV from the AFI Pump House" is deleted and subsequent sections are renumbered accordingly,
- the reference to spare nitrogen supply is deleted from Susbsection 19.9.33 "Housing of Equipment in the AFI Pump House, which will be renumbered to Subsection 19.9.32 "Housing of Equipment in the AFI Pump House" after deleting former Subsection 19.9.32 "Procedures for Depressurizing the RPV from the AFI Pump House",
- all changes to Figures 6.7-1 (sheet 1) and 7.3-2 (sheet 17) are removed, and those figures no longer change,
- all changes to Figure 5.1-3 sheets 1, 2, 9 and 11 are removed, and those sheets no longer change
- the added Pipe No. 274 to sheet 10 of Figure 5.1-3 is removed.

The following markups show the changes to the DCD Amendment application as a result of this RAI response. Changes to the DCD Amendment are indicated by gray shading.

Detailed DCD Markups

Table 3.9-8 Inservice Testing Safety-Related Pumps and Valves (Continued)

No.	Qty	Description (h) (i)	Safety Class (a)	Code Cat. (c)	Valve Func (d)	Test Para (e)	Test Freq (f)	Tier 2 Fig. (g)
~~F301~~	~~1~~	~~Non-safety N2 supply line isolation check valve~~	~~2~~	~~A,C~~	~~I,A~~	~~L,S~~	~~RO~~	~~6.7-1~~
~~F302~~	~~1~~	~~Non-safety N2 supply line isolation check valve~~	~~2~~	~~A,C~~	~~I,A~~	~~L,S~~	~~RO~~	~~6.7-1~~

5.2.2.4 Equipment and Component Description

5.2.2.4.1 Description

In addition to playing a major role in preventing core damage, depressurization of the RPV (either manually, automatically, or as a result of a LOCA) can help mitigate the consequences of severe accidents in which fuel melting and vessel failure occur. If the RPV were to fail at an elevated pressure (greater than approximately 1.37 MPaG) high pressure melt injection could occur resulting in fragmented core debris being transported into the upper drywell. The resulting heatup of the upper drywell could pressurize and fail the drywell. This failure mechanism is eliminated if the RPV is depressurized. The opening of a single SRV is capable of depressurizing the vessel sufficiently to prevent high pressure melt ejection.

~~One of the non-ADS safety/relief valves is provided with an additional solenoid valve and a nitrogen supply line which can supply nitrogen from the AFI Pump House. A nitrogen supply connection in the Pump House allows the use of a portable nitrogen bottle located in the Pump House. This provides a separate and diverse means of depressurizing the RPV that is independent from the nitrogen supply in the Reactor Building to the safety/relief valves. The additional solenoid is normally de-energized and may be energized with DC power supplied from the AFI Pump House.~~

1.2.2.16.15 Alternate Feedwater Injection (AFI) Pump House

The Alternate Feedwater Injection Pump House, which is located remotely from the Reactor Building, contains the additional equipment, such as the AFI pump, piping and valves ~~and additional SRV nitrogen supply~~, which support the AFI function.

6.7.2 System Description

Normally, nitrogen gas for both safety-related and non-safety-related makeup systems is supplied from the nitrogen gas evaporator via the makeup line to the Atmospheric Control System (ACS). The nitrogen supply system shall supply nitrogen which is oil-free with a moisture content of less than 2.5 ppm. This nitrogen is filtered in the HPIN System to remove particles larger than 5 µm. All equipment using this nitrogen shall be capable of operating with nitrogen of the quality listed above. If nitrogen is not available from the ACS, nitrogen is supplied from high pressure nitrogen gas storage bottles. ~~An additional non-safety related nitrogen gas storage bottle capable of supplying nitrogen to one of the non-ADS safety/relief valves from the AFI Pump House is added to allow system depressurization in the event of loss~~

~~of nitrogen supply in the Reactor Building.~~ *The safety-related system is separated into two divisions. There are tielines between the non-safety-related and each division of the safetyrelated system. Each tieline has a motor-operated shutoff valve (See Figure 6.7-1 and Table 6.7-1 for details).*

Table 1.9-1 Summary of ABWR Standard Plant COL License Information (Continued)

Item No.	Subject	Subsection
19.19k	Procedures for Use of Alternate Feedwater Injection	19.9.31
~~19.19l~~	~~Procedures to Depressurize the RPV from the AFI Pump House~~	~~19.9.32~~
19.19~~m~~l	Verification of Environmental Conditions in AFI Pump House	19.9.~~3~~332
19.19~~n~~m	Description of Electrical Power Supply for AFI Equipment	19.9.~~35~~34

14.2.12.1.28 High Pressure Nitrogen Gas Supply System Preoperational Test

(e) Proper system operation and performance capability at the following operating conditions:

(i) Nitrogen gas supplies to SRV accumulators with the pressure control valves maintaining specified value of supply pressure.

(ii) Supply pressure to the SRV accumulators meets the specified value described in the appropriate HPIN System design specification.

(iii) HPIN System is operated with the normal operation lineup in the following test cases:

- *Atmospheric Control System is used as nitrogen source.*
- *Nitrogen gas bottles are used as nitrogen source.*

~~(iv) HPIN is operated with hook-up of a nitrogen gas bottle from the remotely located AFI Pump House.~~

Table 6.2-7 Containment Isolation Valve Information High Pressure Nitrogen Gas Supply System

Valve No.	**P54-F007A/F008A**	**P54-F007B/F008B**	**P54-F200/F209**	~~**P54-F301/F302**~~
Tier 2 Figure	6.7-1	6.7-1	6.7-1	~~6.7-1~~
Applicable Basis	GDC 57	GDC 57	GDC 57	~~GDC 57~~
Fluid	N2	N2	N2	~~N2~~
Line Size	50A	50A	50A	~~50A~~
ESF	Yes	Yes	Yes	~~Yes~~
Leakage Class	(b)	(b)	(b)	~~(b)~~
Location	O/I	O/I	O/I	~~O/I~~
Type C Leak Test	No(r)	No(r)	Yes	~~Yes~~
Valve Type	Globe/Check	Globe/Check	Globe/Check	~~Spring Check/Check~~
Operator	Motor/Self	Motor/Self	Motor/Self	~~Pneumatic/Self~~
Primary Actuation	Electrical/N/A	Electrical/N/A	Electrical/N/A	~~N2 to open/N/A~~
Secondary Actuation	HW/N/A	HW/N/A	HW/N/A	~~N/A~~
Normal Position	Open	Open	Open	~~Close/Close~~
Shutdown Position	Open	Open	Open	~~Close/Close~~
Post-Accident Position	Close	Close	Close	~~Close/Close~~
Power Fail Position	As Is/N/A	As Is/N/A	As Is/N/A	~~N/A~~
Containment Isolation Signal(c)	GG (Y)	GG(Y)	GG(Y)	~~N/A~~
Closure Time (s)	30 / Instantaneous	30 / Instantaneous	30 / Instantaneous	~~Instantaneous~~
Power Source (Div)	I/N/A	II/N/A	I/N/A	~~N/A~~

See page 6.2-167 for notes

Table 6.2-8 Primary Containment Penetration List* (Continued)

Penetration Number	Name	Elevation (mm)	Azimuth (deg)	Offset (mm)	Diameter (mm)	Barrier Type	Testing†‡
X-72	Relief Valve Accumulator	19000	296.5	2000	200		A
~~X-73~~	~~HPIN~~	~~13500~~	~~0~~	~~-4550~~	~~200~~		~~A~~
X-80	Drywell Purge Suction	13700	68	0	550		A

Table 6.2-9 Secondary Containment Penetration List* (Continued)

Penetration Number	Name	Elevation (mm)	Diameter (mm)
~~60~~	~~HPIN~~	~~-1700~~	~~50~~
61	**AFI**	**-1700**	**150**
62	**AFI (Drain Line)****	**-8200**	**20**

Table 6.2-10 Potential Bypass Leakage paths* (Continued)

Penetration Number	Name	Diameter (mm)	Termination Region†	Leakage Barriers‡	Potential Bypass Path
X-72	**Relief Valve Accumulator**	**200**	**S**	**C/K**	**No**
~~**X-73**~~	~~**HPIN**~~	~~**200**~~	~~**A**~~	~~**E/D/H**~~	~~**No**~~
X-80	**Drywell Purge Suction**	**550**	**E**	**E/C/J**	**Yes**

* This table is provided in response to Qustion 430.52b.

† E – Environment
P- Primary Containment
S - Secondary Containment
~~A – AFI pump house~~

~~19.9.32 Procedures to Depressurize the RPV from the AFI Pump House~~

~~Specific, detailed procedures will be developed by the COL applicant for assembling and operating the additional nitrogen supply system from the AFI Pump House to allow depressurization of the RPV through one of the safety/relief valves.~~

19.9.~~33~~32 Housing of Equipment in the AFI Pump House

The equipment for the AFI system ~~as well as the spare nitrogen supply for operation of one safety/relief valve are~~ is housed in a separate Pump House located remotely from the Reactor Building and Turbine Building. Although the Pump House is not required to be seismic Category I and the equipment contained therein is non-safety-related, the COL applicant shall ensure that the environmental conditions within the building are within

the manufacturer's recommended conditions, particularly for electrical equipment supporting those systems.

19.9.~~3~~433 Test and Surveillance Intervals for Equipment in AFI Pump House

The COL applicant will develop test and surveillance intervals for the equipment in the AFI Pump House as described in Section 9.5.14.3.

19.9.~~3~~534 Electrical Power Supply Description for AFI Pump House Equipment

The COL applicant will provide drawings which describe the electrical power supply to the equipment in the AFI Pump House. Provisions shall be made for unavailability of off-site power and unprotected on-site emergency power in the Reactor Building and Turbine Building for beyond design basis events.

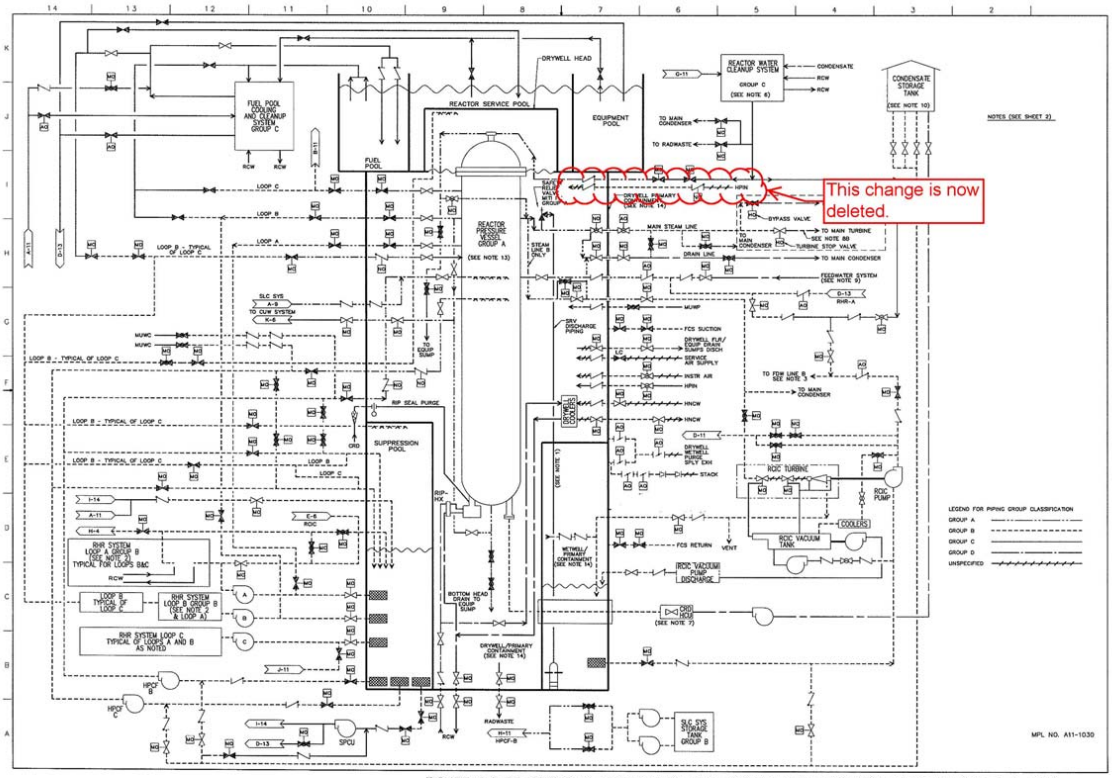

FIGURE 6.2-38 GROUP CLASSIFICATION AND CONTAINMENT ISOLATION DIAGRAM (Sheet 1 of 2)
ABWR DCD/Tier 2 Rev.5

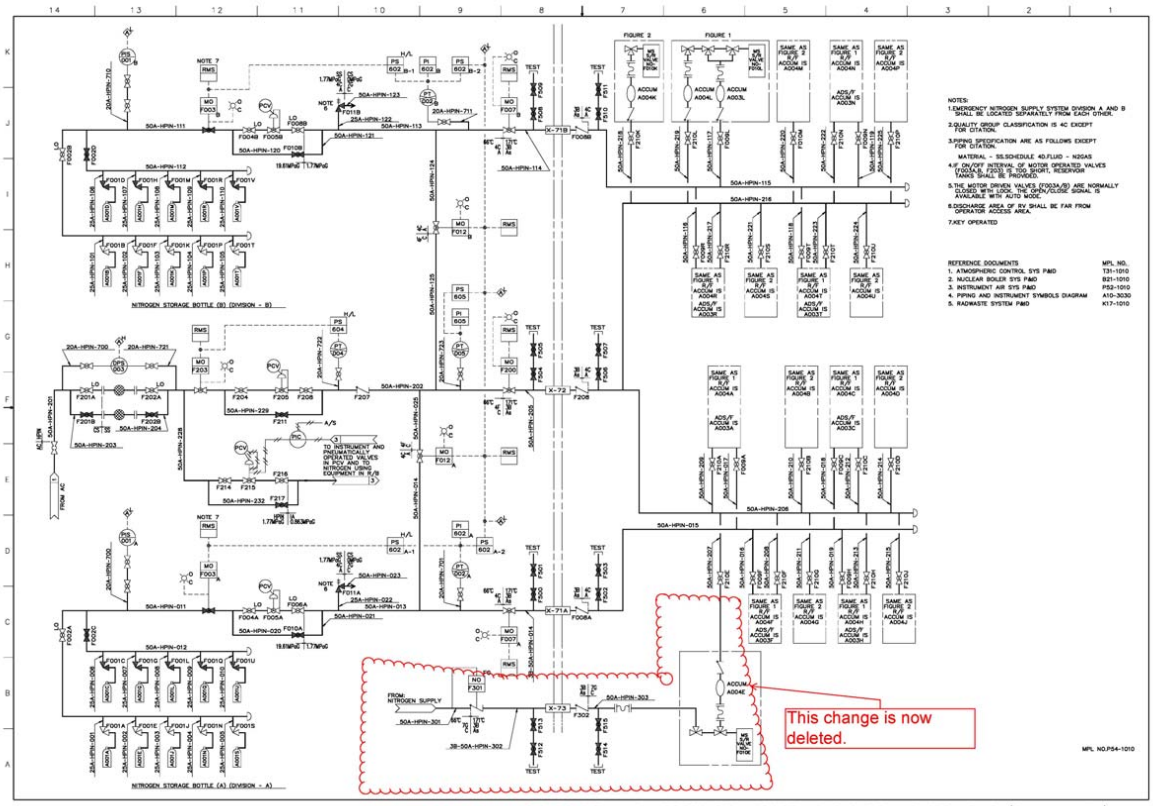

FIGURE 6.7-1 HIGH PRESSURE NITROGEN GAS SUPPLY SYSTEM P&ID (Sheet 1 of 1)
ABWR DCD/Tier 2 Rev.5

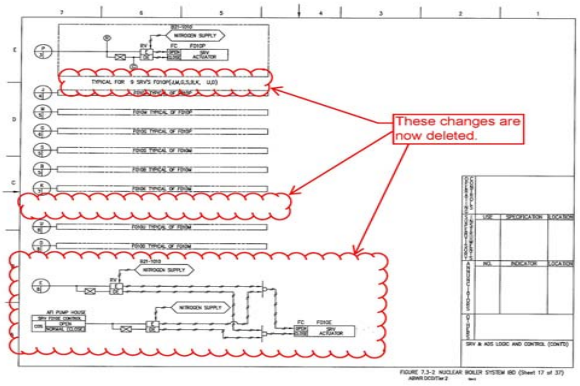
These changes are now deleted.

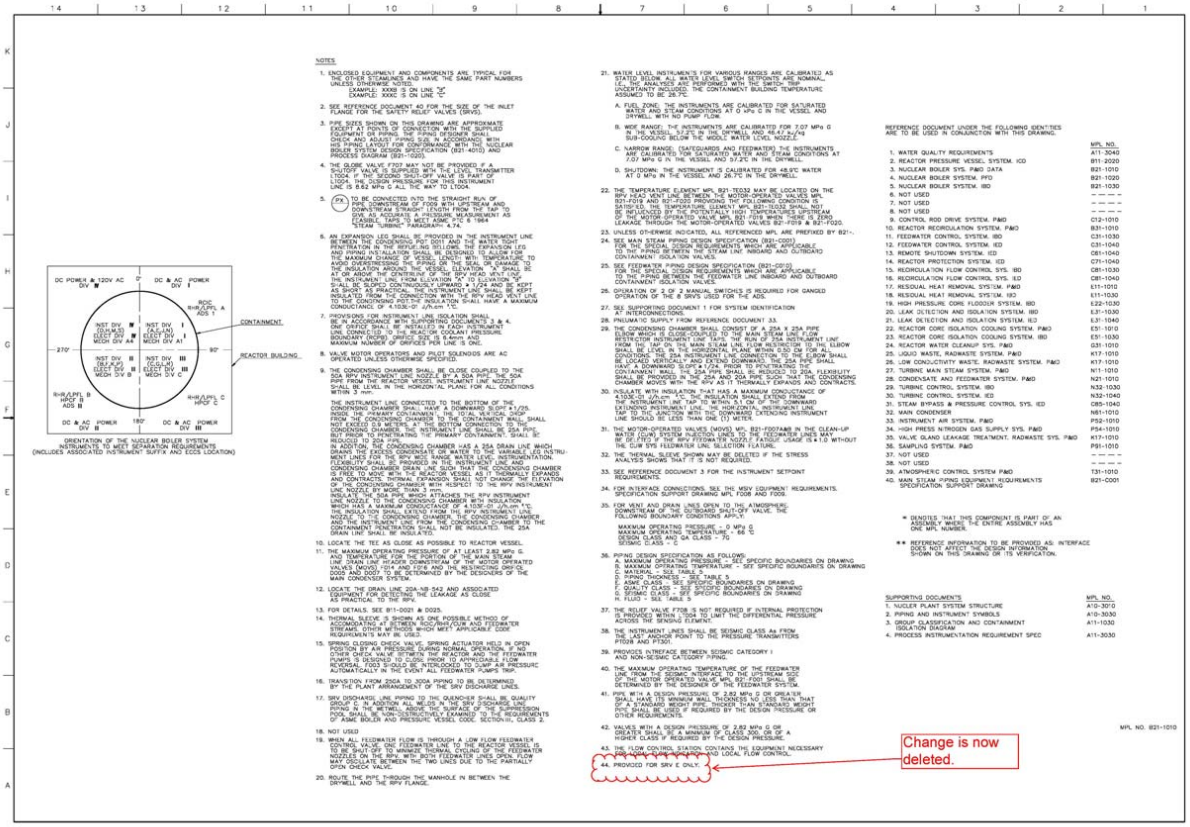

FIGURE 5.1-3 NUCLEAR BOILER SYSTEM P&ID (Sheet 1 of 11)

ABWR DCD/Tier 2 Rev.5

21-14

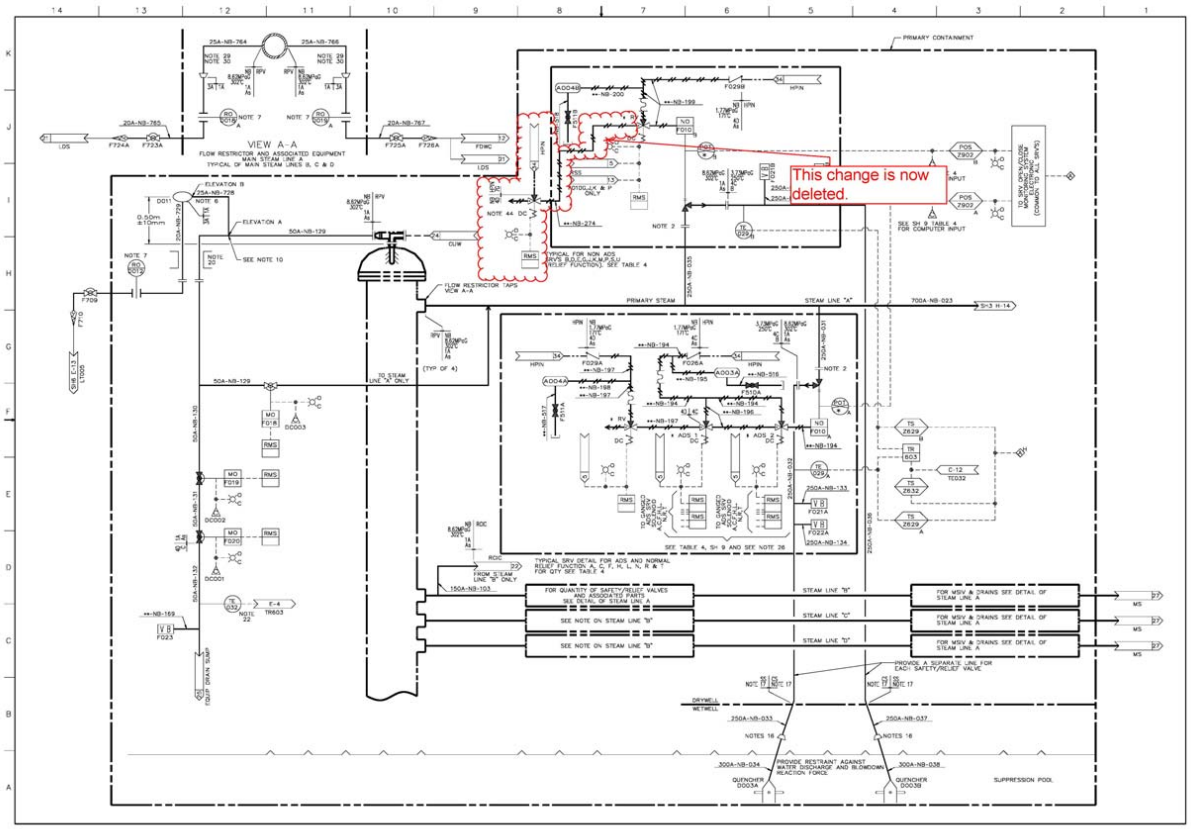

FIGURE 5.1-3 NUCLEAR BOILER SYSTEM P&ID (Sheet 2 of 11)

This change is now deleted.

TABLE 4: SUFFIX LETTER ASSIGNMENTS FOR SAFETY/RELIEF VALVES AND ASSOCIATED EQUIPMENT

SAFETY/RELIEF VALVE F010		P	J	M	G	S	B	K	E	U	D	N	H	T	C	L	F	R	A
TEMPERATURE ELEMENT T029		P	J	M	G	S	B	K	E	U	D	N	H	T	C	L	F	R	A
SOLENOID VALVE	ADS 1											N	H	T	C	L	F	R	A
	ADS 2											N	H	T	C	L	F	R	A
	MSV											N	H	T	C	L	F	R	A
	ALTERNATE								E										
ACCUMULATOR	ADS																		
	A004	P	J	M	G	S	B	K	E	U	D	N	H	T	C	L	F	R	A
CHECK VALVE	F028											N	H	T	C	L	F	R	A
	T029	P	J	M	G	S	B	K	E	U	D	N	H	T	C	L	F	R	A
SRV OPEN CLOSE MONITORING SYSTEM		P	J	M	G	S	B	K	E	U	D	N	H	T	C	L	F	R	A
	COMPUTER INPUT ⚠	NC041	NC042	NC043	NC044	NC045	NC046	NC047	NC048	NC049	NC050	NC051	NC052	NC053	NC054	NC055	NC056	NC057	NC058
* COMPUTER INPUT ⚠		B21 NC023	B21 NC024	B21 NC025	B21 NC026	B21 NC027	B21 NC028	B21 NC029	B21 NC030	B21 NC031	B21 NC032	B21 NC033	B21 NC034	B21 NC035	B21 NC036	B21 NC037	B21 NC038	B21 NC039	B21 NC040
SPRING SET PRESSURE (MPa G)		7.92	7.92	7.99	7.99	7.99	7.99	8.06	8.06	8.06	8.06	8.13	8.13	8.13	8.13	8.20	8.20	8.20	8.20
SPRING RESEAT PRESSURE (MPa G)		7.37	7.37	7.44	7.44	7.44	7.44	7.50	7.50	7.50	7.50	7.56	7.56	7.56	7.56	7.63	7.63	7.63	7.63
RELIEF SET PRESSURE (MPa G)		7.51	7.58	7.65	7.65	7.65	7.65	7.72	7.72	7.72	7.72	7.79	7.79	7.79	7.79	7.86	7.86	7.86	7.86
RELIEF RESEAT PRESSURE (MPa G)		7.00	7.07	7.14	7.14	7.14	7.14	7.21	7.21	7.21	7.21	7.28	7.28	7.28	7.28	7.35	7.35	7.35	7.35
	P1007A THRU J/ PS-2607A-6 THRU D-6	AT OF A,B,C,D																	
	P1007A THRU J/ PS-2607A-5 THRU D-5		AT OF A,B,C,D																
	P1007A THRU J/ PS-2607A-4 THRU D-4			AT OF A,B,C,D															
	P1007A THRU J/ PS-2607A-3 THRU D-3							AT OF A,B,C,D											
	P1007A THRU J/ PS-2607A-2 THRU D-2											AT OF A,B,C,D							
	P1007A THRU J/ PS-2607A-1 THRU D-1															AT OF A,B,C,D			

* COMPUTER INPUTS FOR SRV POSITION SEE PERFORMANCE MONITORING AND CONTROL SYSTEM C91-4010

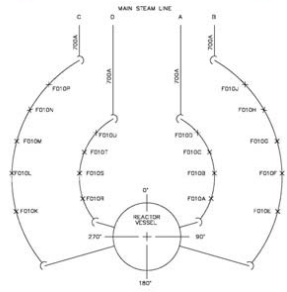

FIG. 3
SAFETY/RELIEF VALVE ORIENTATION AND STEAM PIPING LINE SIZES

TABLE 2 ELEVATION CORRELATION CHART

REFERENCE	(COLD VESSEL) cm ABOVE VESSEL ZERO	REFERENCE	REACTOR VESSEL WATER LEVEL IDENTIFIER (SEE TABLE 3)	CONTROL ROOM WATER LEVEL INDICATION AND TRIP LEVELS SEE NOTE 21: PGDS ACCIDENT MONITOR FUEL ZONE RANGE LI 606A&B	SAFEGUARDS WIDE RANGE LIS 2603A,B, C,D,E,F,G&H	SAFEGUARDS NARROW RANGE LIS 2601A, B,C&D	FEEDWATER NARROW RANGE	SHUTDOWN LI605	REACTOR WELL LI604
INSTRUMENT LINE NOZZLE	2105.6cm	TOP INSIDE OF HEAD						1282.5cm	1800.0cm
	1633.6cm								
	1554.4cm	MAIN STEAM LINE NOZZLES			660.4cm				
						508.0cm	508.0cm		
			8			484.4cm	484.4cm		
			1389.3cm						
			7				448.6cm		
	1342.1cm	HI-ALARM NORMAL WATER LEVEL LOW ALARM	1353.5cm						
			4				425.6cm		
			1330.5cm						
						380.6cm	380.6cm		
			3						
			1285.7cm			355.5cm	355.5cm	355.5cm	
	1267.3cm								
	1224.3cm	SEPARATOR RLY. ⊙							
INSTRUMENT LINE NOZZLE (NARROW RANGE)	1222.0cm	BOTTOM OF DRYER SKIRT							
			2		263.2cm				
			1168.1cm						
				127.0cm					
			1.5		118.1cm				
			1023.0cm						
			1		34.7cm				
INSTRUMENT LINE NOZZLE (WIDE RANGE)	904.95cm	TOP OF THE ACTIVE FUEL (TAF)	939.8cm	0cm	0cm	0cm	0cm	0cm	0cm
	897.8cm								
				-381.0cm					
	190.5 cm	UPPER							
UPPER PUMP DECK	184.2cm	INSTRUMENT LINE NOZZLES							
LOWER PUMP DECK	176.5cm 170.2 cm	LOWER							
	0cm	BOTTOM HEAD							

TABLE 3 WATER LEVEL TRIP FUNCTION

REACTOR VESSEL WATER LEVEL	DESCRIPTION OF TRIPS	INSTRUMENT PROVIDING TRIP SIGNAL	NOTES
8	TRIPS RCIC TURBINE	LS-2601A-1 THRU D-1	NARROW RANGE
	TRIP HPCF INJECTION VALVES	LS-2601A-1 THRU D-1	NARROW RANGE
	CLOSE MAIN TURBINE STOP VALVES TRIPS FEEDWATER PUMPS	SEE REFERENCE DOCUMENT 12	NARROW RANGE
7	HIGH LEVEL ALARM	SEE REFERENCE DOCUMENT 12	NARROW RANGE
4	LOW LEVEL ALARM (RRS FLOW RUN BACK ON "TRIP OF FEED PUMP)		NARROW RANGE
3	SCRAMS REACTOR	LIS-2601A THRU D	NARROW RANGE
	CLOSE HI-HI SHUTDOWN COOLING ISOLATION VALVES	LIS-2601A THRU D	NARROW RANGE
	CLOSE CONTAINMENT ISOL VALVES, LDS EXCEPT SW COOLING AND CUW ISOL VALVES AND MSIVS	LIS-2601A THRU D	NARROW RANGE
	TRIP 4 OF RRS PUMPS	SEE REFERENCE DOCUMENT 12	NARROW RANGE
2	INITIATES RCIC	LS-2603A-1 THRU D-1	WIDE RANGE
	TRIP REMAINING 6 RRS PUMPS	LS-2603A-1 THRU D-1	WIDE RANGE
	CLOSE CUW ISOL VALVES	LS-2603A-2 THRU D-2	WIDE RANGE
1.5	INITIATES HPCF B & C	LS-2603C-3 THRU H-3	WIDE RANGE
	CLOSE MSIVS & SW COOLING SYSTEM ISOL VALVES	LS-2603C-4 THRU H-4	WIDE RANGE
1	INITIATES ADS	LIS-2603A THRU H	WIDE RANGE
	INITIATES RHR/LPFL MODE	LIS-2603A THRU H	WIDE RANGE

FIGURE 5.1-3 NUCLEAR BOILER SYSTEM P&ID (Sheet 9 of 11)
ABWR DCD/Tier 2 Rev.5

21-B2

TABLE 5: PIPING SPECIFICATIONS

PIPE NO.	SCHEDULE	MATERIAL	FLUID
001	**	CS	W
002	**	CS	W
003	100	CS	W
004	100	CS	W
005	100	SS	W
006	100	SS	W
007	**	CS	W
008	**	CS	W
009	100	CS	W
010	100	SS	W
011	100	CS	W
012	100	CS	W
013	**	CS	W
014	**	CS	W
015	**	CS	W
016	**	CS	W
017	**	CS	W
018	**	CS	W
019	**	CS	W
020	**	CS	W
021	**	CS	W
022	**	CS	W
023	80	CS	S
024	**	CS	S
025	80	CS	S
026	**	CS	S
027	80	CS	S
028	**	CS	S
029	80	CS	S
030	**	CS	S
031	N/A	CS	S
032	80	CS	S
033	60	SS	S
034	60	SS	S
035	N/A	CS	S
036	80	CS	S
037	60	SS	S
038	60	SS	S
039	N/A	CS	S
040	80	CS	S
041	60	SS	S
042	60	SS	S
043	N/A	CS	S
044	80	CS	S
045	60	SS	S
046	60	SS	S
047	N/A	CS	S
048	80	CS	S
049	60	SS	S
050	60	SS	S
051	N/A	CS	S
052	80	CS	S
053	60	SS	S
054	60	SS	S
055	N/A	CS	S
056	80	CS	S
057	60	SS	S
058	60	SS	S
059	N/A	CS	S
060	80	CS	S
061	60	SS	S
062	60	SS	S
063	N/A	CS	S
064	80	CS	S
065	60	SS	S
066	60	SS	S
067	N/A	CS	S
068	80	CS	S
069	60	SS	S
070	60	SS	S
071	N/A	CS	S
072	80	CS	S
073	60	SS	S
074	60	SS	S
075	N/A	CS	S
076	80	CS	S
077	60	SS	S
078	60	SS	S
079	N/A	CS	S
080	80	CS	S

TABLE 5: PIPING SPECIFICATIONS (CONT'D)

PIPE NO.	SCHEDULE	MATERIAL	FLUID
081	60	SS	S
082	60	SS	S
083	N/A	CS	S
084	80	CS	S
085	60	SS	S
086	60	SS	S
087	N/A	CS	S
088	80	CS	S
089	60	SS	S
090	60	SS	S
091	N/A	CS	S
092	80	CS	S
093	60	SS	S
094	60	SS	S
095	N/A	CS	S
096	80	CS	S
097	60	SS	S
098	60	SS	S
099	N/A	CS	S
100	80	CS	S
101	60	SS	S
102	60	SS	S
103	120	CS	S
104	160	CS	S
105	160	CS	S
106	160	CS	S
107	160	CS	S
108	160	CS	S
109	**	CS	S
110	**	CS	S
111	**	CS	S
112	**	CS	S
113	**	CS	S
114	**	CS	S
115	**	CS	S
116	**	CS	S
117	**	CS	S
118	**	CS	S
119	**	CS	S
120	**	CS	S
121	**	CS	S
122	**	CS	S
123	**	CS	S
124	**	CS	S
125	**	CS	S
126	**	CS	S
127	**	CS	S
128	**	CS	S
129	80	CS	S
130	80	CS	S
131	80	CS	S
132	**	CS	S
133	80	CS	S
134	80	CS	S
135	80	CS	S
136	80	CS	S
137	80	CS	S
138	80	CS	S
139	80	CS	S
140	80	CS	S
141	80	CS	S
142	80	CS	S
143	80	CS	S
144	80	CS	S
145	80	CS	S
146	80	CS	S
147	80	CS	S
148	80	CS	S
149	80	CS	S
150	80	CS	S
151	80	CS	S
152	80	CS	S
153	80	CS	S
154	80	CS	S
155	80	CS	S
156	80	CS	S
157	80	CS	S
158	80	CS	S
159	80	CS	S
160	80	CS	S

TABLE 5: PIPING SPECIFICATIONS (CONT'D)

PIPE NO.	SCHEDULE	MATERIAL	FLUID
161	80	CS	S
162	80	CS	S
163	80	CS	S
164	80	CS	S
165	80	CS	S
166	80	CS	S
167	80	CS	S
168	80	CS	S
169	**	CS	S
170	**	SS	N
171	**	SS	N
172	**	SS	N
173	**	SS	N
174	**	SS	N
175	**	SS	N
176	**	SS	N
177	**	SS	N
178	**	SS	N
179	**	SS	N
180	**	SS	N
181	**	SS	N
182	**	SS	A
183	**	SS	A
184	**	SS	A
185	**	SS	A
186	**	SS	A
187	**	SS	A
188	**	SS	A
189	**	SS	A
190	**	SS	A
191	**	SS	A
192	**	SS	A
193	**	SS	A
194	**	SS	N
195	**	SS	N
196	**	SS	N
197	**	SS	N
198	**	SS	N
199	**	SS	N
200	**	SS	N
201	**	SS	N
202	**	SS	N
203	**	SS	N
204	**	SS	N
205	**	SS	N
206	**	SS	N
207	**	SS	N
208	**	SS	N
209	**	SS	N
210	**	SS	N
211	**	SS	N
212	**	SS	N
213	**	SS	N
214	**	SS	N
215	**	SS	N
216	**	SS	N
217	**	SS	N
218	**	SS	N
219	**	SS	N
220	**	SS	N
221	**	SS	N
222	**	SS	N
223	**	SS	N
224	**	SS	N
225	**	SS	N
226	**	SS	N
227	**	SS	N
228	**	SS	N
229	**	SS	N
230	**	SS	N
231	**	SS	N
232	**	SS	N
233	**	SS	N
234	**	SS	N
235	**	SS	N
236	**	SS	N
237	**	SS	N
238	**	SS	N
239	**	SS	N
240	**	SS	N

TABLE 5: PIPING SPECIFICATIONS (CONT'D)

PIPE NO.	SCHEDULE	MATERIAL	FLUID
241	**	SS	N
242	**	SS	N
243	**	SS	N
244	**	SS	N
245	**	SS	N
246	**	SS	N
247	**	SS	N
248	**	SS	N
249	**	SS	N
250	**	SS	N
251	**	SS	N
252	**	SS	N
253	**	SS	N
254	160	CS	W
255	160	CS	W
256	160	CS	W
257	160	CS	W
258	160	CS	S
259	160	CS	S
260	160	CS	S
261	160	CS	S
262	160	CS	S
263	160	CS	S
264	160	CS	S
265	160	CS	S
266	**	CS	S
267	**	CS	W
268	**	CS	W
269	**	CS	S
270	**	CS	S
271	**	CS	S
272	**	CS	S
273	**	CS	W
274	**	SS	N
500	**	CS	W
501	160	CS	W
502	160	CS	W
503	**	CS	W
504	160	CS	W
505	160	CS	W
506	**	CS	S
507	**	CS	S
508	**	SS	N
509	**	SS	A
510	**	SS	N
511	**	SS	A
512	**	SS	N
513	**	SS	A
514	**	SS	N
515	**	SS	A
516	**	SS	N
517	**	SS	N
518	**	SS	N
519	**	SS	N
520	**	SS	N
521	**	SS	N
522	**	SS	N
523	**	SS	N
524	**	SS	N
525	**	SS	N
526	**	SS	N
527	**	SS	N
528	**	SS	N
529	**	SS	N
530	**	SS	N
531	**	SS	N
532	**	SS	N
533	**	SS	N
534	**	SS	N
535	**	SS	N
536	**	SS	N
537	**	SS	N
538	**	SS	N
539	**	SS	N
540	**	SS	N
541	**	SS	N
542	**	CS	S
543	160	CS	W
544	160	CS	W

TABLE 5: PIPING SPECIFICATIONS (CONT'D)

PIPE NO.	SCHEDULE	MATERIAL	FLUID
700	80	SS	S
701	**	SS	W
702	**	SS	W
703	80	SS	S
704	**	SS	W
705	**	SS	W
706	80	SS	S
707	**	SS	W
708	**	SS	W
709	80	SS	S
710	**	SS	W
711	**	SS	W
712	80	SS	W
713	**	SS	W
714	80	SS	W
715	**	SS	W
716	80	SS	W
717	**	SS	W
718	80	SS	W
719	**	SS	W
720	80	SS	W
721	**	SS	W
722	80	SS	W
723	**	SS	W
724	80	SS	W
725	**	SS	W
726	80	SS	W
727	**	SS	W
728	**	CS	S
729	**	SS	W
730	**	SS	S
731	**	SS	S
732	80	SS	W
733	**	SS	W
734	80	SS	W
735	**	SS	W
736	80	SS	W
737	**	SS	W
738	80	SS	W
739	**	SS	W
740	80	SS	W
741	**	SS	W
742	80	SS	W
743	**	SS	W
744	80	SS	W
745	**	SS	W
746	80	SS	W
747	**	SS	W
748	80	SS	W
749	**	SS	W
750	80	SS	W
751	**	SS	W
752	80	SS	W
753	**	SS	W
754	80	SS	W
755	**	SS	W
756	80	SS	W
757	**	SS	W
758	80	SS	W
759	**	SS	W
760	80	SS	W
761	**	SS	W
762	80	SS	W
763	**	SS	W
764	**	SS	S
765	**	SS	W
766	**	SS	S
767	**	SS	W
768	**	SS	S
769	**	SS	W
770	**	SS	S
771	**	SS	W
772	**	SS	S
773	**	SS	W
774	**	SS	S
775	**	SS	W
776	**	SS	S
777	**	SS	W
778	**	SS	S
779	**	SS	W

TABLE 5: PIPING SPECIFICATIONS (CONT'D)

PIPE NO.	SCHEDULE	MATERIAL	FLUID
780	**	CS	S
781	**	CS	S
782	**	SS	S
783	**	SS	S
784	**	SS	S
785	**	SS	S

Line No. 274 is now deleted.

FIGURE 5.1-3 NUCLEAR BOILER SYSTEM P&ID (Sheet 10 of 11)

ABWR DCD/Tier 2 Rev.5

21-83

TABLE 6 : PIPE NUMBERS FOR THE MAIN STEAM LINES

MAIN STEAM LINE	RPV TO THE OUTBOARD MSIV	OUTBOARD MSIV TO SEISMIC INTERFACE	SEISMIC INTERFACE TO MAIN STEAM SYSTEM	OUTBOARD MSIV TEST LINE	
				OUTBOARD MSIV TO REDUCER	DOWNSTREAM OF REDUCER
A	700A-N3-023	700A-N3-024	700A-N3-269	50A-N3-258	20A-N3-259
B	700A-N3-025	700A-N3-026	700A-N3-270	50A-N3-260	20A-N3-261
C	700A-N3-027	700A-N3-028	700A-N3-271	50A-N3-262	20A-N3-263
D	700A-N3-029	700A-N3-030	700A-N3-272	50A-N3-264	20A-N3-265

TABLE 7 : PIPE NUMBERS FOR THE SAFETY/RELIEF VALVE (SRV) DISCHARGE LINES

SRV	SRV DISCHARGE LINE				VACUUM BREAKER LINES	
	MSL TO SRV NOTE 2	SRV TO DIAPHRAGM FLOOR	DIAPHRAGM FLOOR TO REDUCER	REDUCER TO QUENCHER	UPSTREAM	DOWNSTREAM
F010A	250A-N3-031	250A-N3-032	250A-N3-033	300A-N3-034	250A-N3-133	250A-N3-134
F010B	250A-N3-035	250A-N3-036	250A-N3-037	300A-N3-038	250A-N3-135	250A-N3-136
F010C	250A-N3-039	250A-N3-040	250A-N3-041	300A-N3-042	250A-N3-137	250A-N3-138
F010D	250A-N3-043	250A-N3-044	250A-N3-045	300A-N3-046	250A-N3-139	250A-N3-140
F010E	250A-N3-047	250A-N3-048	250A-N3-049	300A-N3-050	250A-N3-141	250A-N3-142
F010F	250A-N3-051	250A-N3-052	250A-N3-053	300A-N3-054	250A-N3-143	250A-N3-144
F010G	250A-N3-055	250A-N3-056	250A-N3-057	300A-N3-058	250A-N3-145	250A-N3-146
F010H	250A-N3-059	250A-N3-060	250A-N3-061	300A-N3-062	250A-N3-147	250A-N3-148
F010J	250A-N3-063	250A-N3-064	250A-N3-065	300A-N3-066	250A-N3-149	250A-N3-150
F010K	250A-N3-067	250A-N3-068	250A-N3-069	300A-N3-070	250A-N3-151	250A-N3-152
F010L	250A-N3-071	250A-N3-072	250A-N3-073	300A-N3-074	250A-N3-153	250A-N3-154
F010M	250A-N3-075	250A-N3-076	250A-N3-077	300A-N3-078	250A-N3-155	250A-N3-156
F010N	250A-N3-079	250A-N3-080	250A-N3-081	300A-N3-082	250A-N3-157	250A-N3-158
F010P	250A-N3-083	250A-N3-084	250A-N3-085	300A-N3-086	250A-N3-159	250A-N3-160
F010R	250A-N3-087	250A-N3-088	250A-N3-089	300A-N3-090	250A-N3-161	250A-N3-162
F010S	250A-N3-091	250A-N3-092	250A-N3-093	300A-N3-094	250A-N3-163	250A-N3-164
F010T	250A-N3-095	250A-N3-096	250A-N3-097	300A-N3-098	250A-N3-165	250A-N3-166
F010U	250A-N3-099	250A-N3-100	250A-N3-101	300A-N3-102	250A-N3-167	250A-N3-168

TABLE 8 : PIPE NUMBERS FOR THE MAIN STEAM ISOLATION VALVE (MSIV) PNEUMATIC LINES

MSIV	OPENING-CHECK VALVE TO MSIV	OPENING-FROM ACCUMULATOR	CLOSING-VALVE CONTROL PANEL TO MSIV	DRAIN LINE
F008A	••-N3-170	••-N3-171	••-N3-172	••-N3-508
F008B	••-N3-173	••-N3-174	••-N3-175	••-N3-509
F008C	••-N3-176	••-N3-177	••-N3-178	••-N3-510
F008D	••-N3-179	••-N3-180	••-N3-181	••-N3-511
F009A	••-N3-182	••-N3-183	••-N3-184	••-N3-512
F009B	••-N3-185	••-N3-186	••-N3-187	••-N3-513
F009C	••-N3-188	••-N3-189	••-N3-190	••-N3-514
F009D	••-N3-191	••-N3-192	••-N3-193	••-N3-515

TABLE 10 : PIPE NUMBERS FOR THE MAIN STEAM LINE (MSL) INSTRUMENT LINES

MAIN STEAM LINE	MSL FLOW RESTRICTOR INSTRUMENT LINES				MSL PRESSURE TEST POINT
	INSTRUMENT LINE TO LDS		INSTRUMENT LINE TO LDS & FDWC		
	MSL TO REDUCER	REDUCER TO EXCESS FLOW CHECK VALVE	MSL TO REDUCER	REDUCER TO EXCESS FLOW CHECK VALVE	
A	25A-N3-764	20A-N3-765	25A-N3-766	20A-N3-767	20A-N3-780
B	25A-N3-768	20A-N3-769	25A-N3-770	20A-N3-771	20A-N3-781
C	25A-N3-772	20A-N3-773	25A-N3-774	20A-N3-775	-
D	25A-N3-776	20A-N3-777	25A-N3-778	20A-N3-779	-

TABLE 9 : PIPE NUMBERS FOR THE SAFETY/RELIEF VALVE (SRV) PNEUMATIC LINES

SRV	ADS PNEUMATIC LINES				PNEUMATIC LINES FOR POWER-ACTUATED RELIEF			PNEUMATIC LINE FROM AFI PUMP HOUSE
	CHECK VALVE TO SOV "ADS 2" TO SRV	BRANCH LINE FROM ACCUMULATOR	BRANCH LINE THRU SOV "ADS 2" TO SOV "ADS 2"	ACCUMULATOR DRAIN LINE	CHECK VALVE TO SOV "ADS 2" (ADS SRV) OR SRV (NON-ADS SRV)	BRANCH LINE FROM ACCUMULATOR	ACCUMULATOR DRAIN LINE	MANUAL SOV TO RV SOV
F010A	••-N3-194	••-N3-195	••-N3-196	••-N3-516	••-N3-197	••-N3-198	••-N3-517	
F010B					••-N3-199	••-N3-200	••-N3-518	
F010C	••-N3-201	••-N3-202	••-N3-203	••-N3-519	••-N3-204	••-N3-205	••-N3-520	
F010D					••-N3-206	••-N3-207	••-N3-521	
F010E					••-N3-208	••-N3-209	••-N3-522	••-N3-274
F010F	••-N3-210	••-N3-211	••-N3-212	••-N3-523	••-N3-213	••-N3-214	••-N3-524	
F010G					••-N3-215	••-N3-216	••-N3-525	
F010H	••-N3-217	••-N3-218	••-N3-219	••-N3-526	••-N3-220	••-N3-221	••-N3-527	
F010J					••-N3-222	••-N3-223	••-N3-528	
F010K					••-N3-224	••-N3-225	••-N3-529	
F010L	••-N3-226	••-N3-227	••-N3-228	••-N3-530	••-N3-229	••-N3-230	••-N3-531	
F010M					••-N3-231	••-N3-232	••-N3-532	
F010N	••-N3-233	••-N3-234	••-N3-235	••-N3-533	••-N3-236	••-N3-237	••-N3-534	
F010P					••-N3-238	••-N3-239	••-N3-535	
F010R	••-N3-240	••-N3-241	••-N3-242	••-N3-536	••-N3-243	••-N3-244	••-N3-537	
F010S					••-N3-245	••-N3-246	••-N3-538	
F010T	••-N3-247	••-N3-248	••-N3-249	••-N3-539	••-N3-250	••-N3-251	••-N3-540	
F010U					••-N3-252	••-N3-253	••-N3-541	

This change is now deleted.

FIGURE 5.1-3 NUCLEAR BOILER SYSTEM P&ID (Sheet 11 of 11)