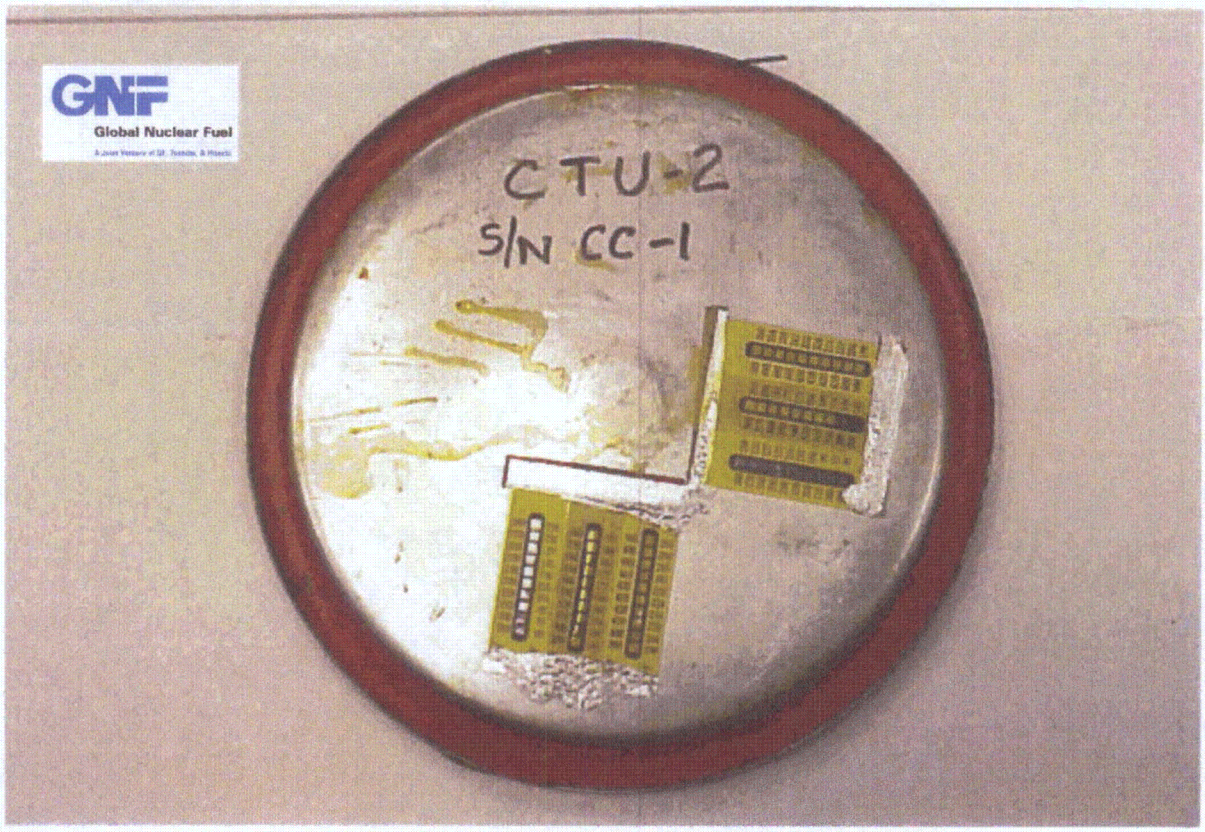

Figure 2.10.1-52 – CTU-2 Post-Test Disassembly; View of ICCA Closure Lid

Figure 2.10.1-53 – CTU-2 Post-Test Disassembly; View of ICCA Gasket

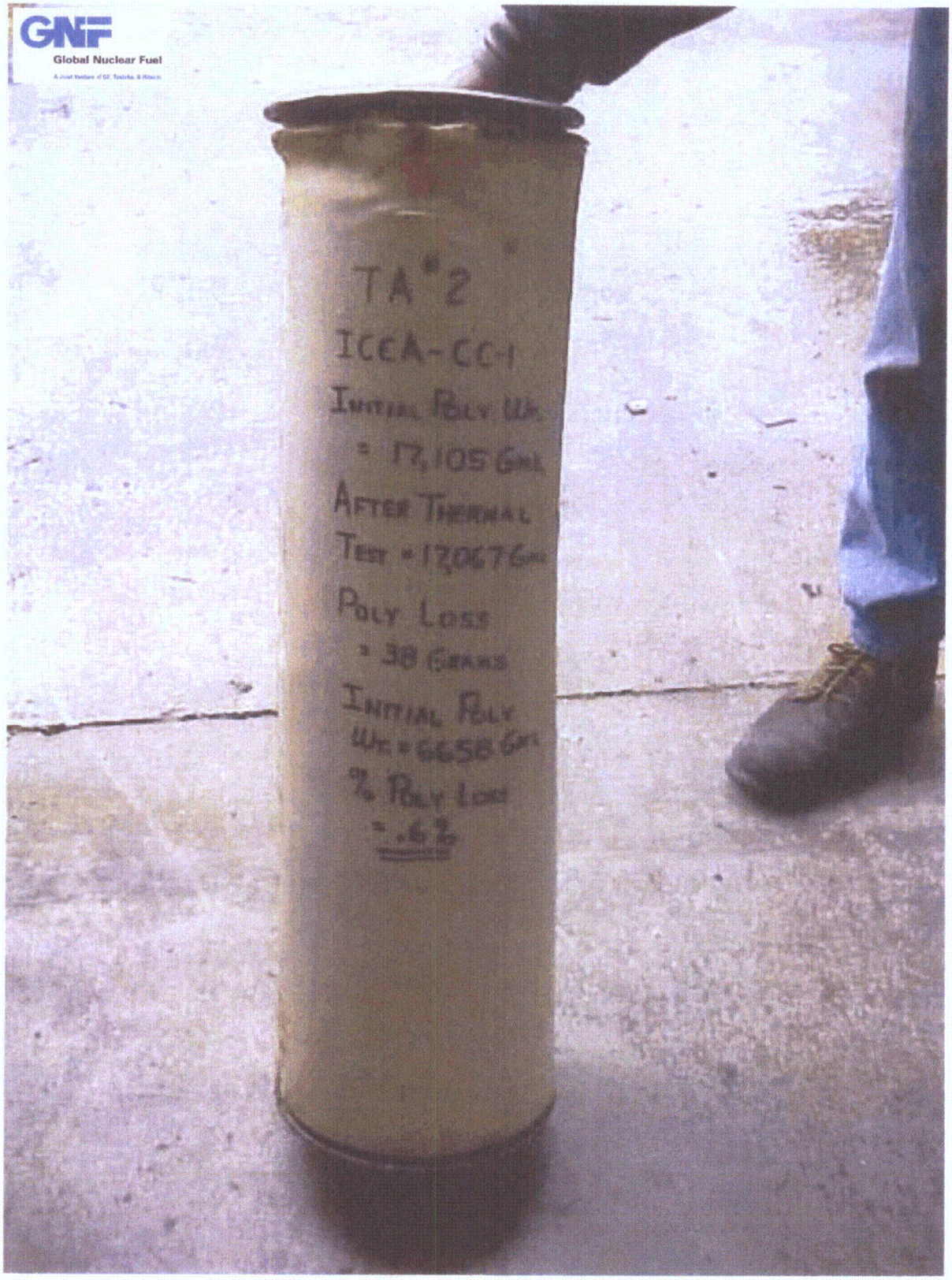

Figure 2.10.1-54 – CTU-2 Post-Test Disassembly; View of ICCA #1 Polyethylene Sheeting

Figure 2.10.1-55 – CTU-2 Post-Test Disassembly; View of OCA Residual Foam Block

Figure 2.10.1-56 – CTU-2 Post-Test Disassembly; View of Damage to OCA Foam Block

Figure 2.10.1-57 – CTU-3 Free Drop Test No. 1; NCT Drop onto OCA Lid Corner

Figure 2.10.1-58 – CTU-3 Free Drop Test No. 1; OCA Lid Corner Damage; ~5" Wide

Figure 2.10.1-59 – CTU-3 Free Drop Test No. 2; View Immediately after Impact

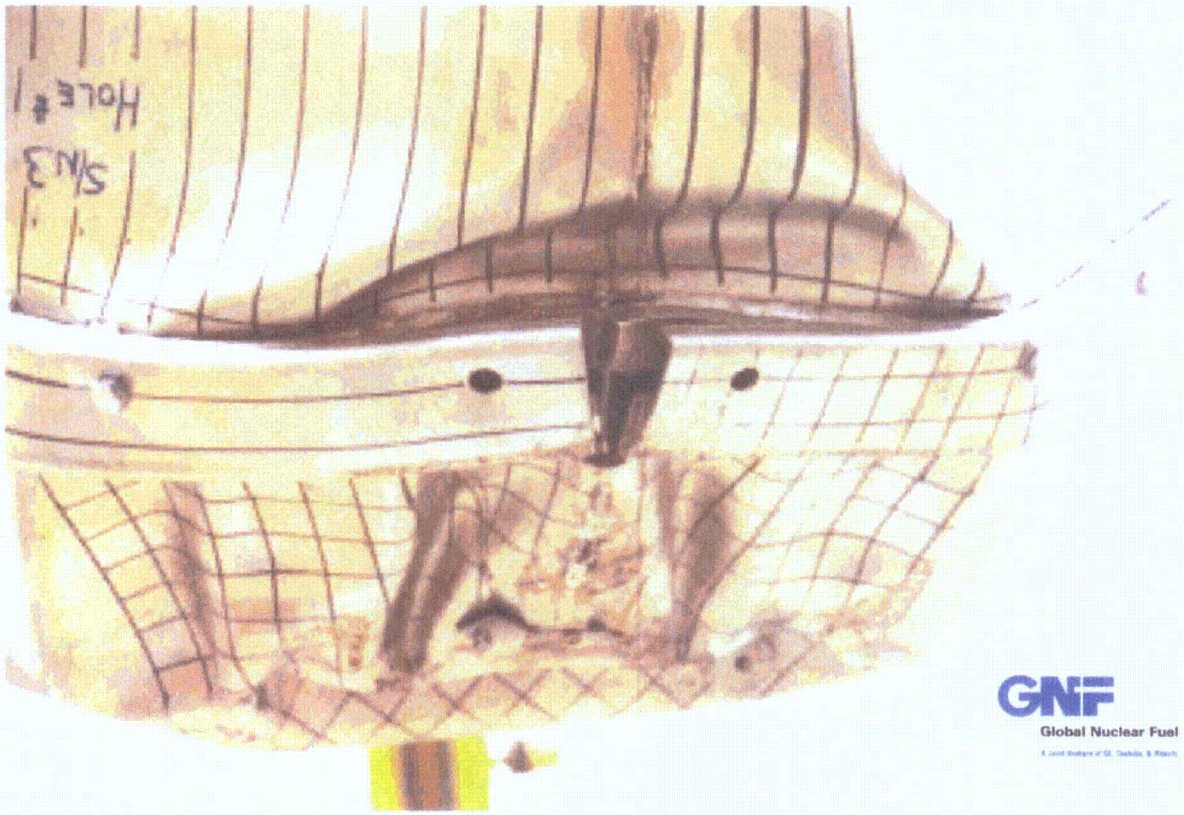

Figure 2.10.1-60 – CTU-3 Free Drop Test No. 2; Close-up View of Damage

Figure 2.10.1-61 - CTU-3 Puncture Drop Test No. 11; Orientation of CTU Prior to Test

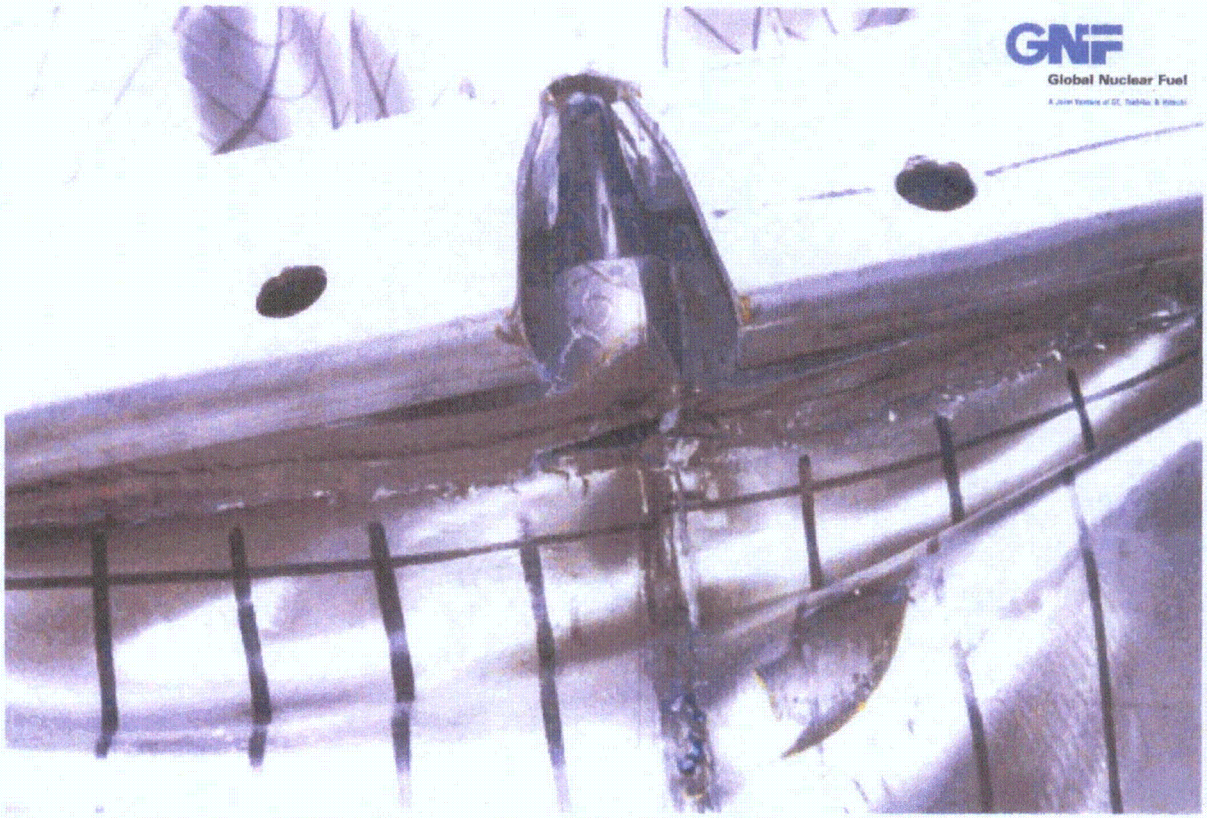

Figure 2.10.1-62 – CTU-3 Puncture Drop Test No. 11; Close-up View of Damage

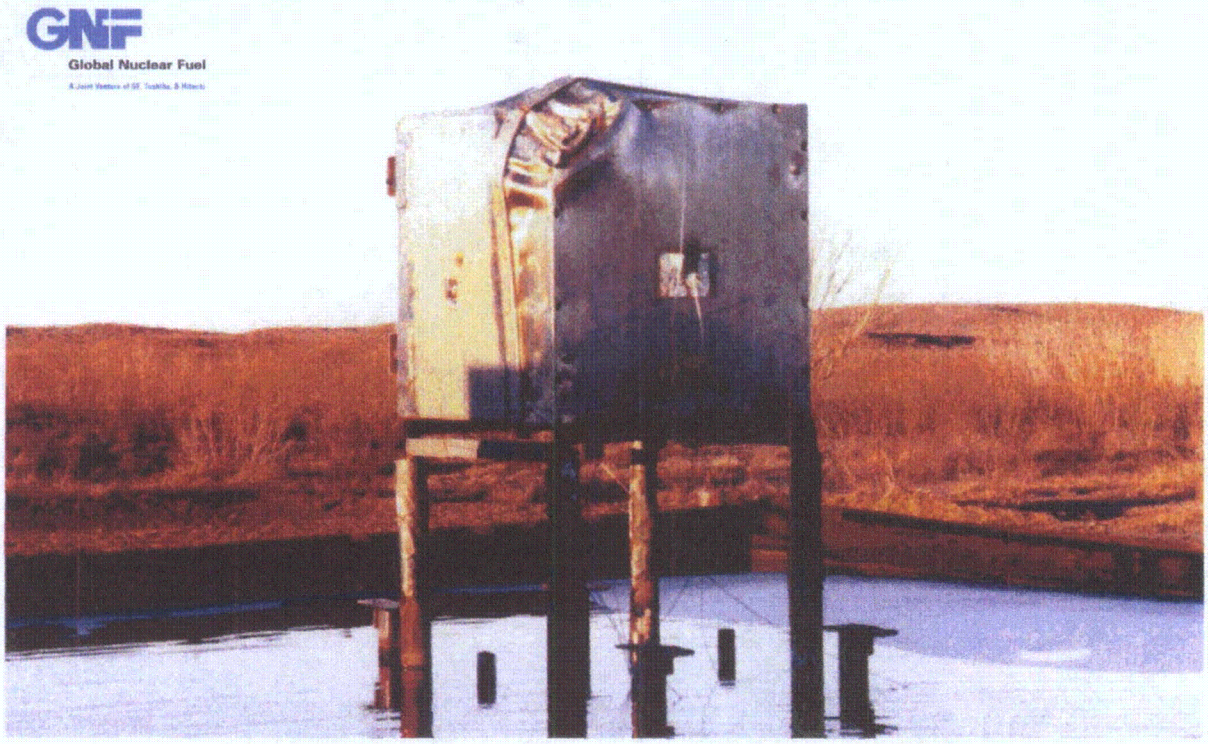

Figure 2.10.1-63 – CTU-3 Fire Test 15; View Before Fire Showing Tests 1, 2, & 11 Damage

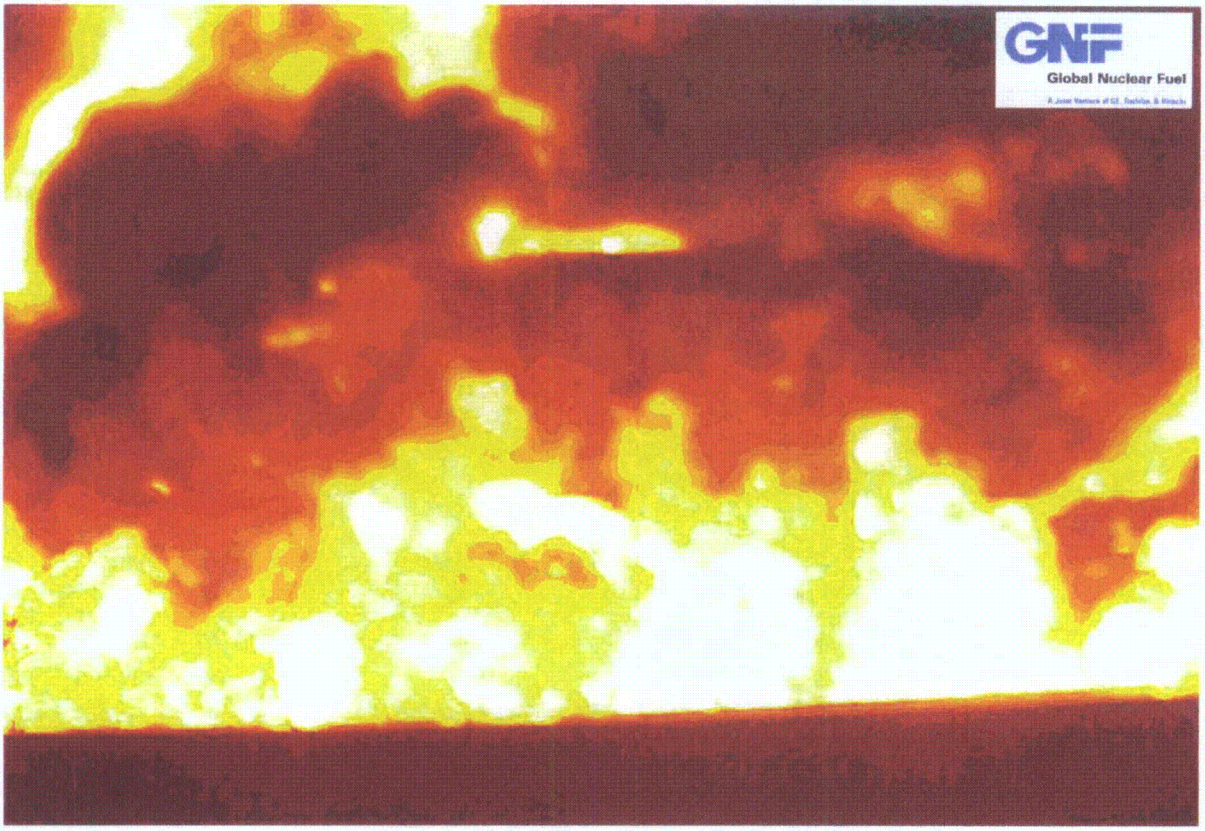

Figure 2.10.1-64 – CTU-3 Fire Test 15; View ~ 6 Minutes after Start

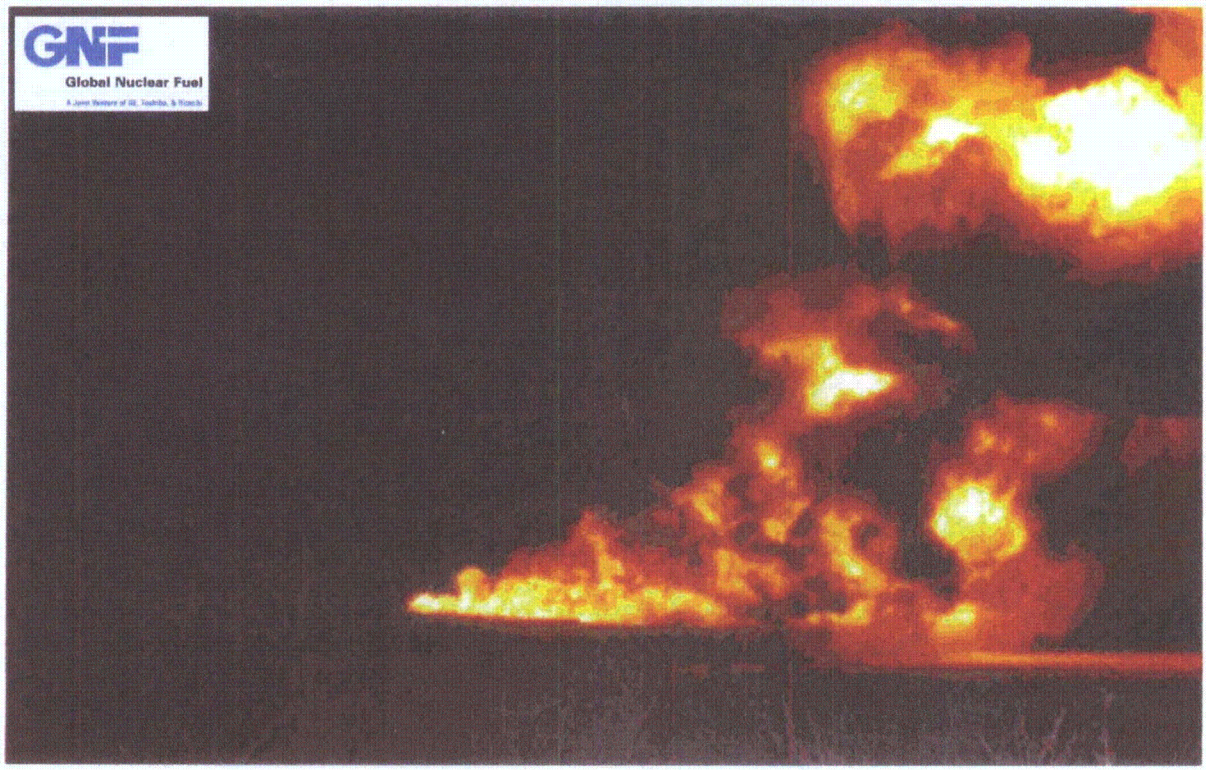

Figure 2.10.1-65 – CTU-3 Fire Test 15; View ~15 Minutes after Start

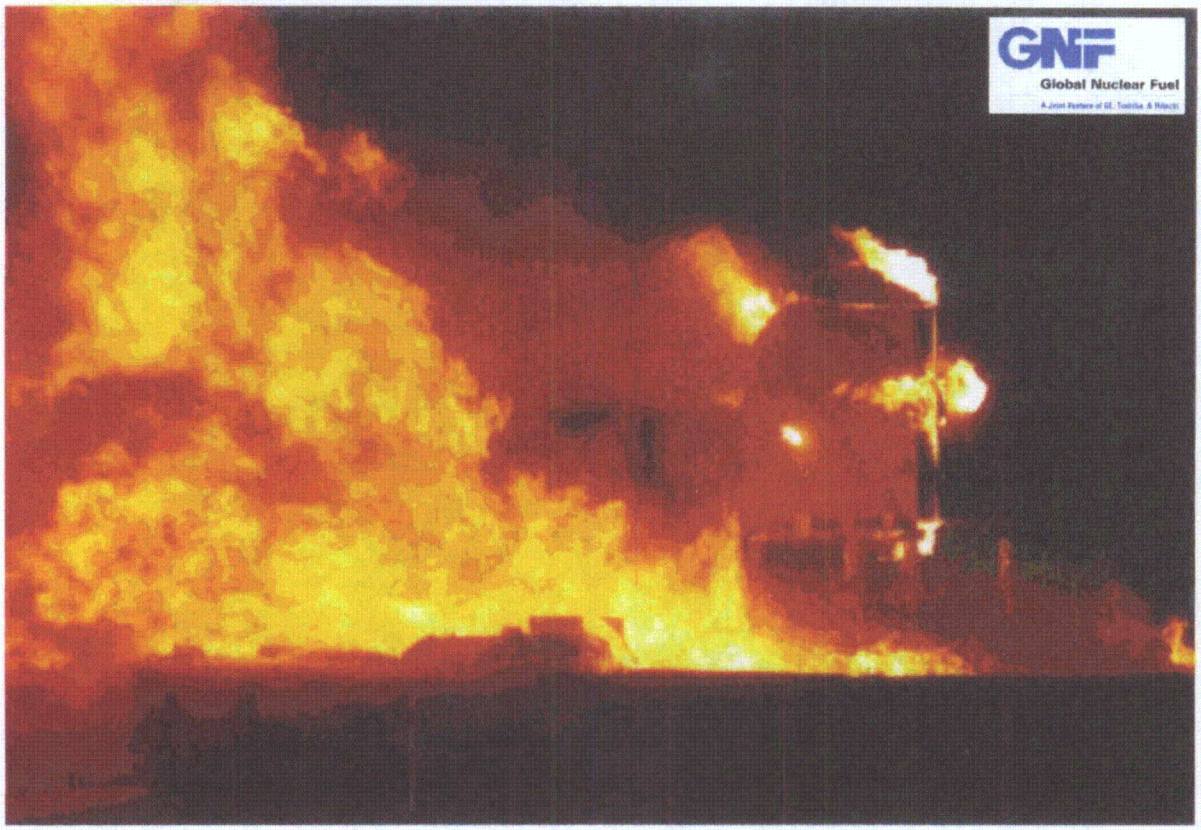

Figure 2.10.1-66 – CTU-3 Fire Test 15; View ~30 Minutes after Start

Figure 2.10.1-67 – CTU-3 Fire Test 15; View **~15** Minutes after End of Fire (Note Flares)

Figure 2.10.1-68 – CTU-3 Post-Test Disassembly; Overall View of Test Unit

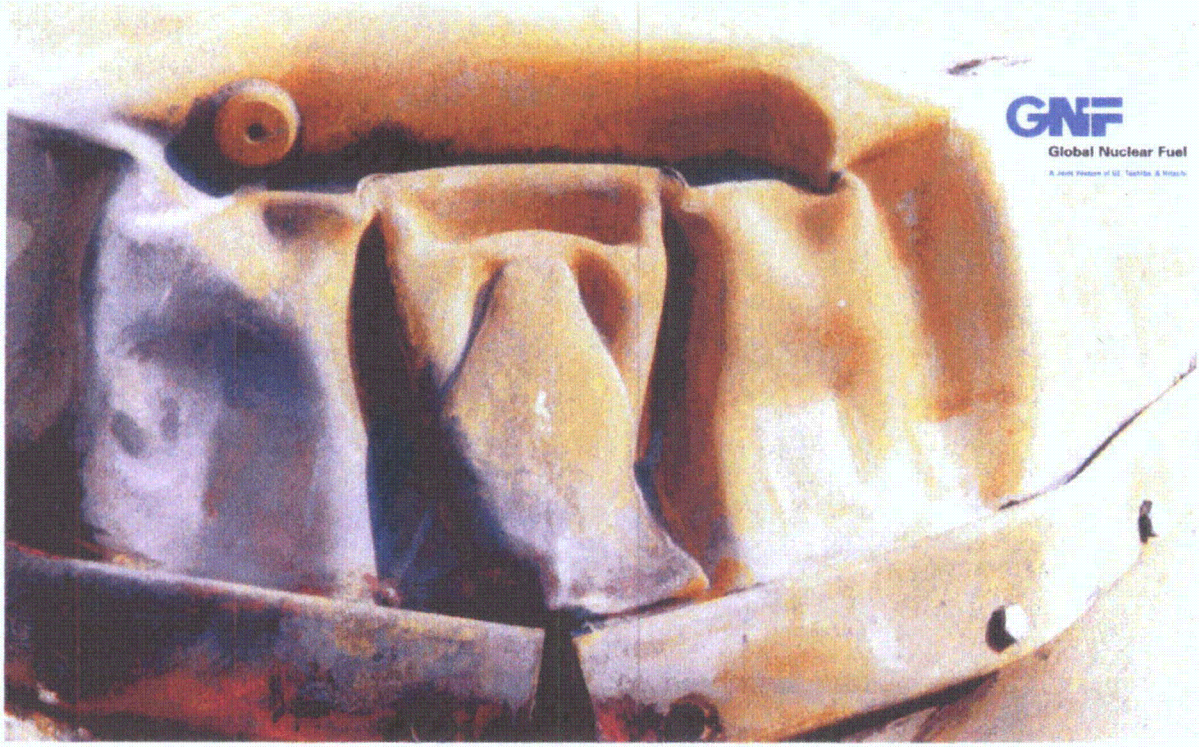

Figure 2.10.1-69 – CTU-3 Post-Test Disassembly; Close-up View of Damage

Figure 2.10.1-70 – CTU-3 Post-Test Disassembly; View of Burn-Through Hole

Figure 2.10.1-71 – CTU-3 Post-Test Disassembly; View with OCA Lid Removed

Figure 2.10.1-72 – CTU-3 Post-Test Disassembly; View with OCA Lid Removed

Figure 2.10.1-73 – CTU-3 Post-Test Disassembly; View of ICCAs/Foam Block Structure

Figure 2.10.1-74 – CTU-3 Post-Test Disassembly; Close-up View of Damaged ICCA Closure Lid

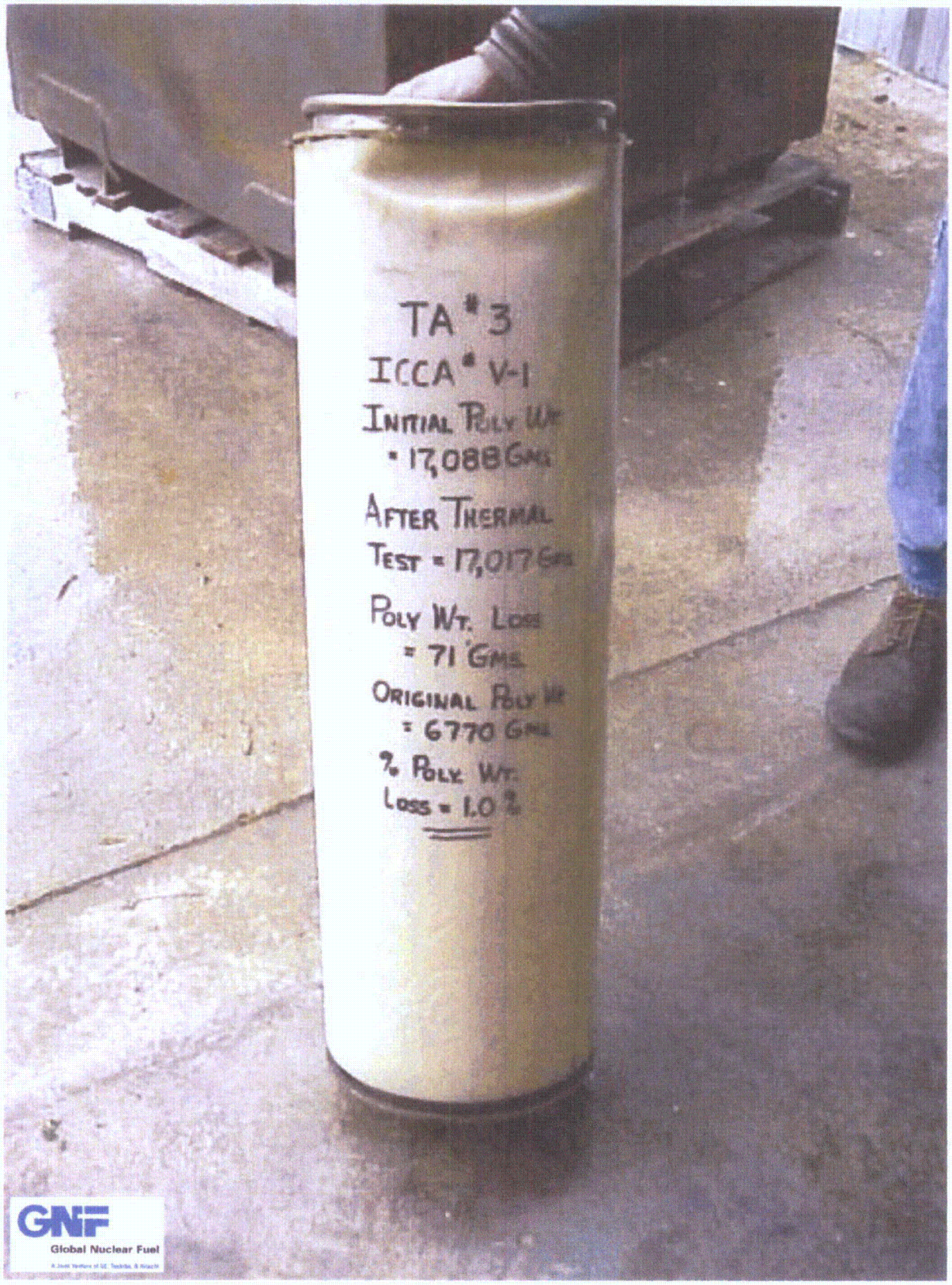

Figure 2.10.1-75 – CTU-3 Post-Test Disassembly; View of ICCA #1 Polyethylene Sheeting

Figure 2.10.1-76 – CTU-3 Post-Test Disassembly; View of Residual OCA Foam Block

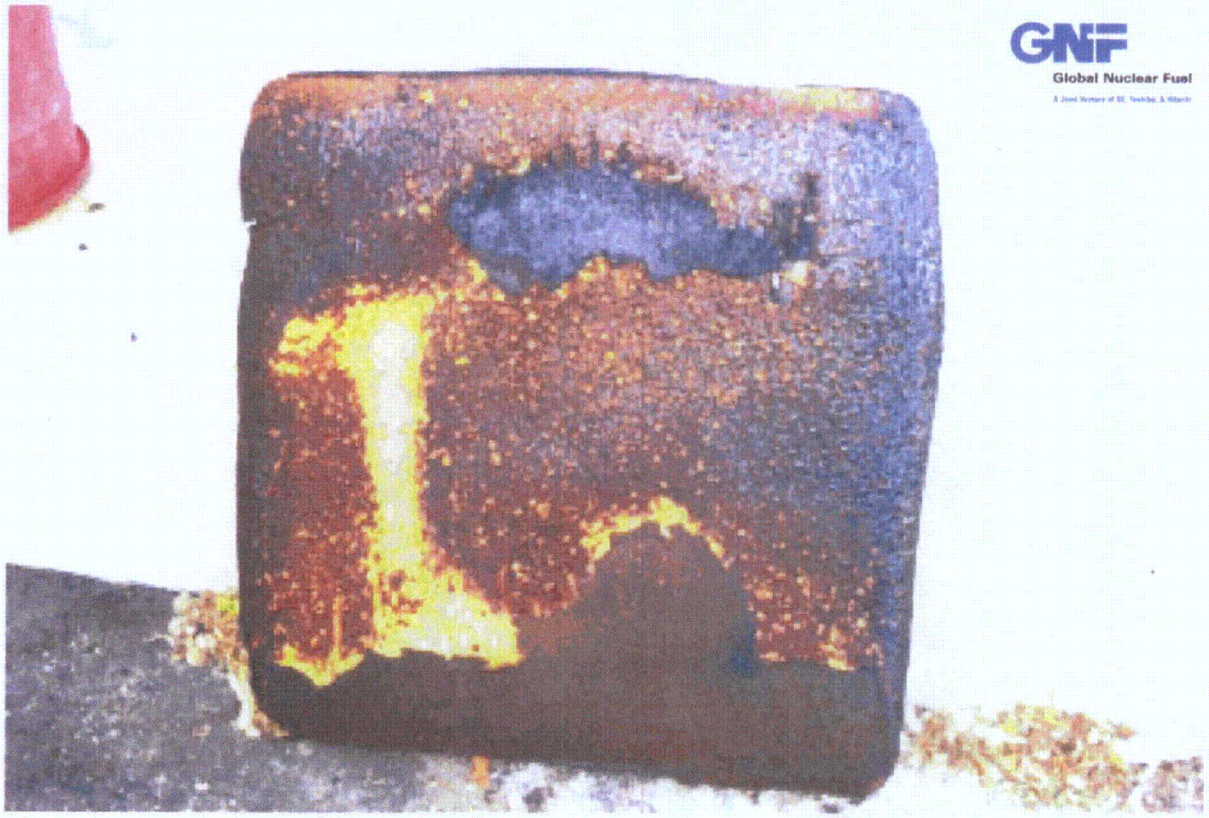

Figure 2.10.1-77 – CTU-3 Post-Test Disassembly; View of Residual OCA Bottom Foam

Figure 2.10.1-70 78 – CTU-4 Free Drop Test No. 5; NCT Shallow Angle Drop onto OCA Lid

Figure 2.10.1-71 79 – CTU-4 Free Drop Test No. 6; View of Damage

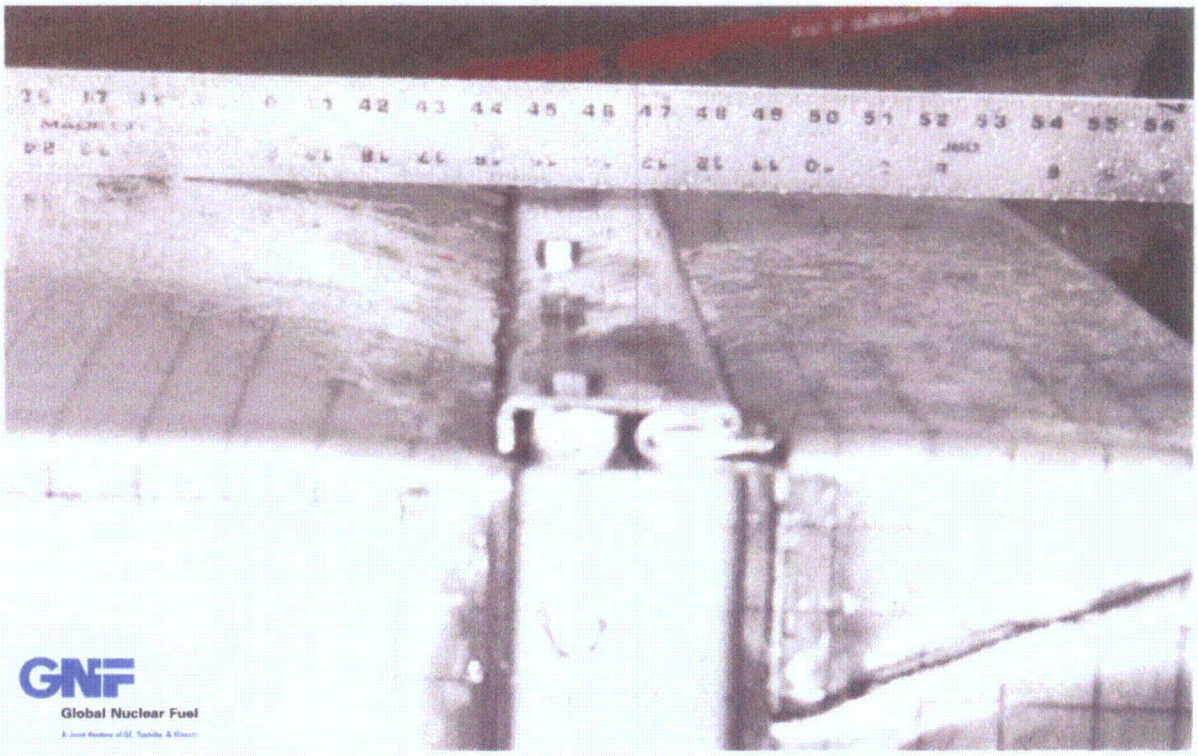

Figure 2.10.1-72 80 – CTU-4 Free Drop Test No. 6; Close-up View of Damage

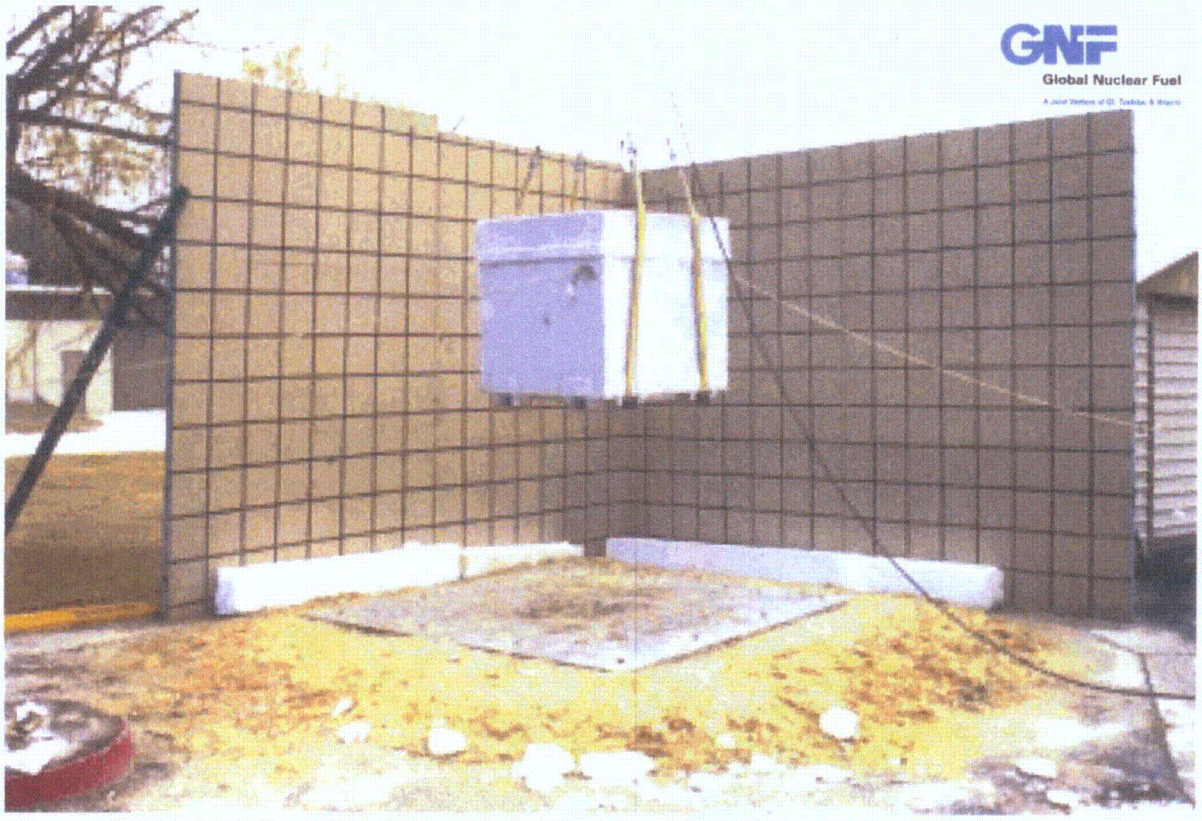

Figure 2.10.1-73 81 – CTU-4 Free Drop Test No. 7; NCT Drop onto OCA Bottom

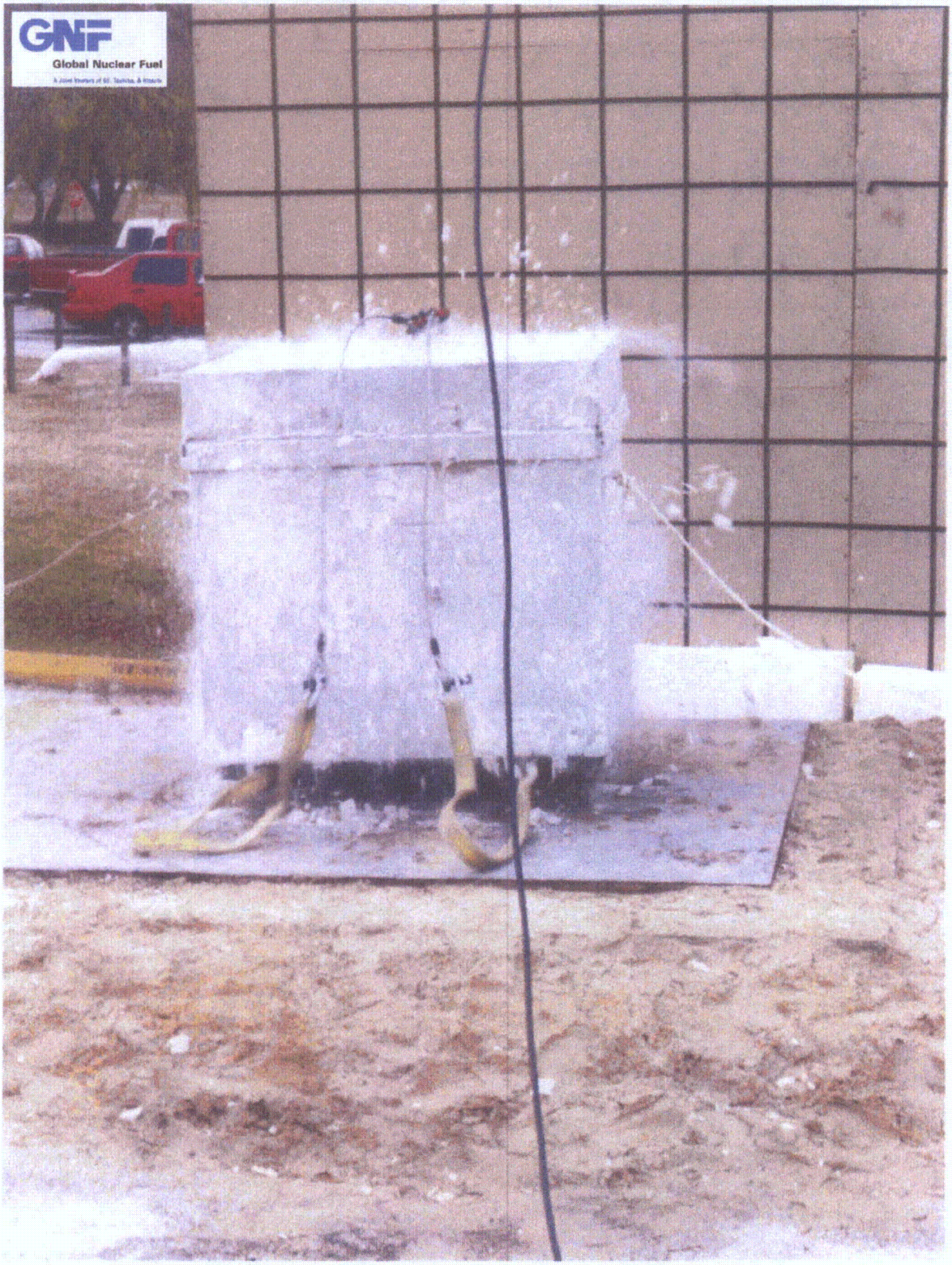

Figure 2.10.1-74 82 – CTU-4 Free Drop Test No. 7; NCT Drop at Impact

Figure 2.10.1-75 83 – CTU-4 Free Drop Test No. 8; HAC Drop onto OCA Bottom

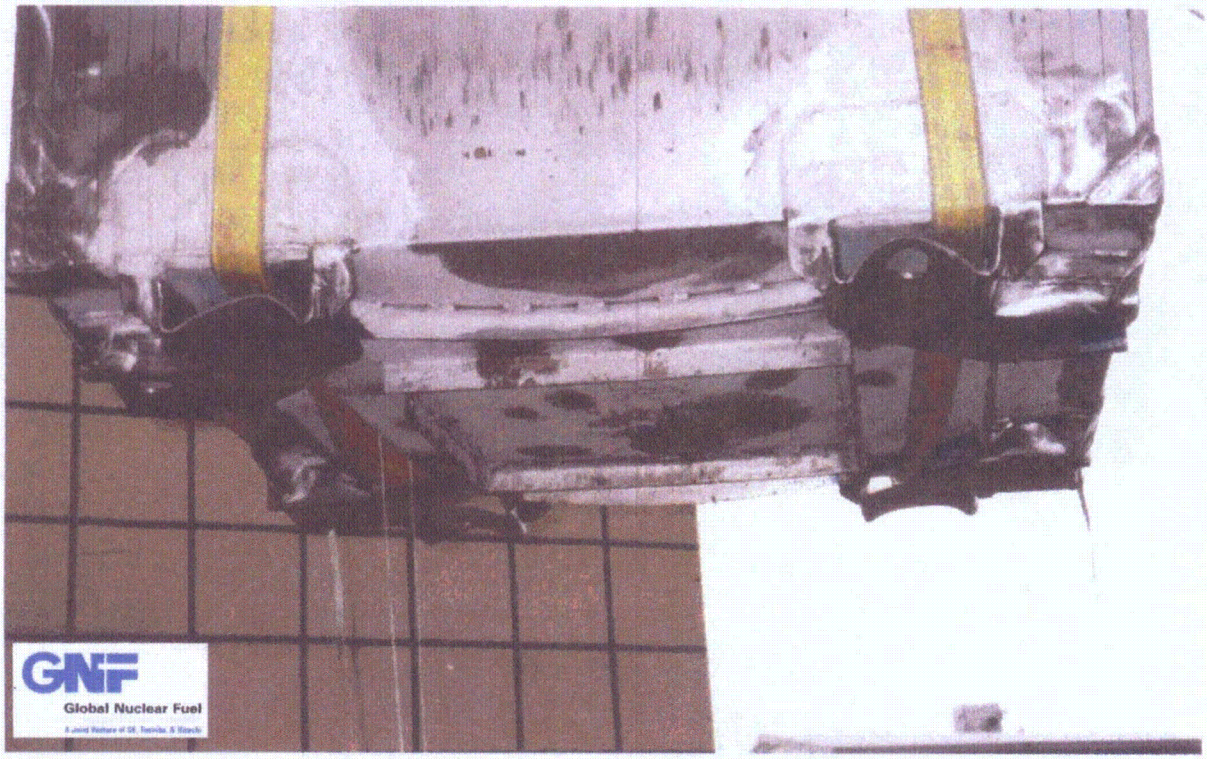

Figure 2.10.1-76 84 – CTU-4 Free Drop Test No. 8; View of Damage

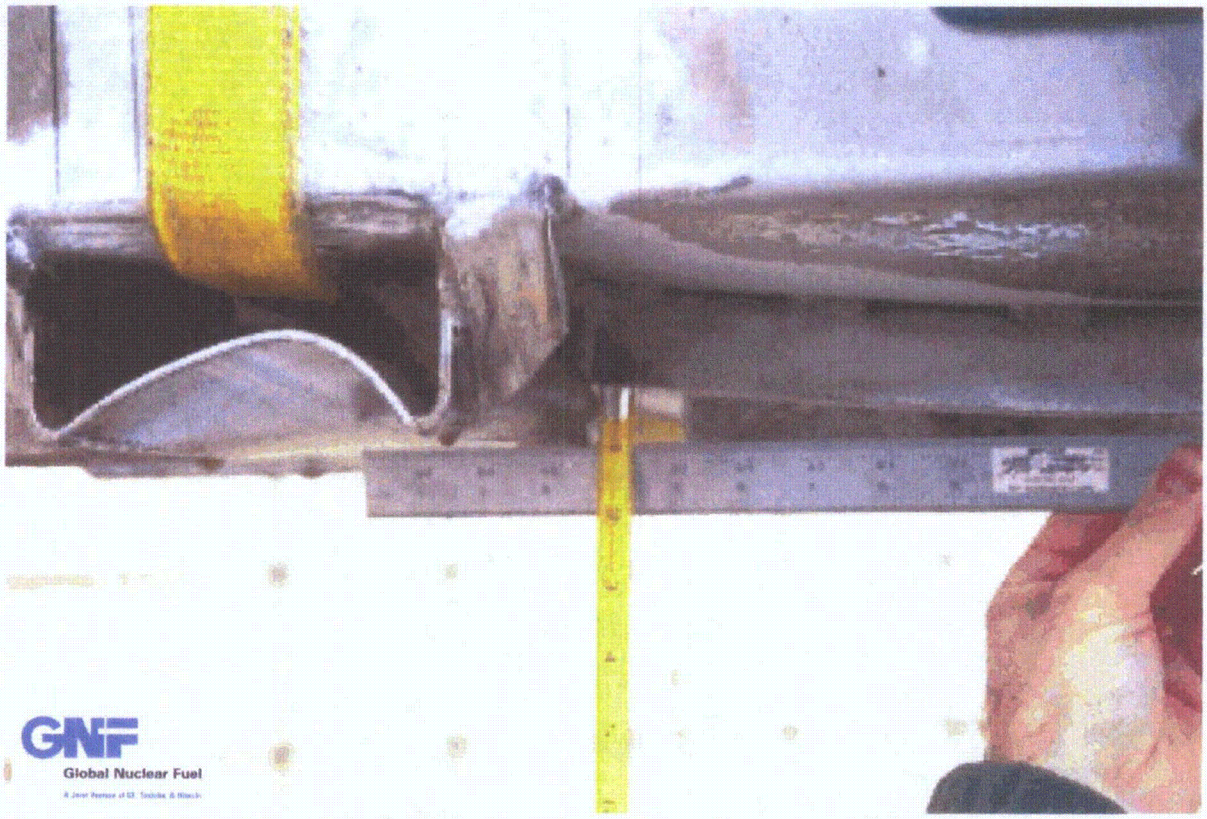

Figure 2.10.1-77 85 – CTU-4 Free Drop Test No. 8; Close-up View of Damage; ~1" Deep

Figure 2.10.1-78 86 – CTU-4 Free Drop Test No. 8; Close-up View of Damage; ~1½" Deep

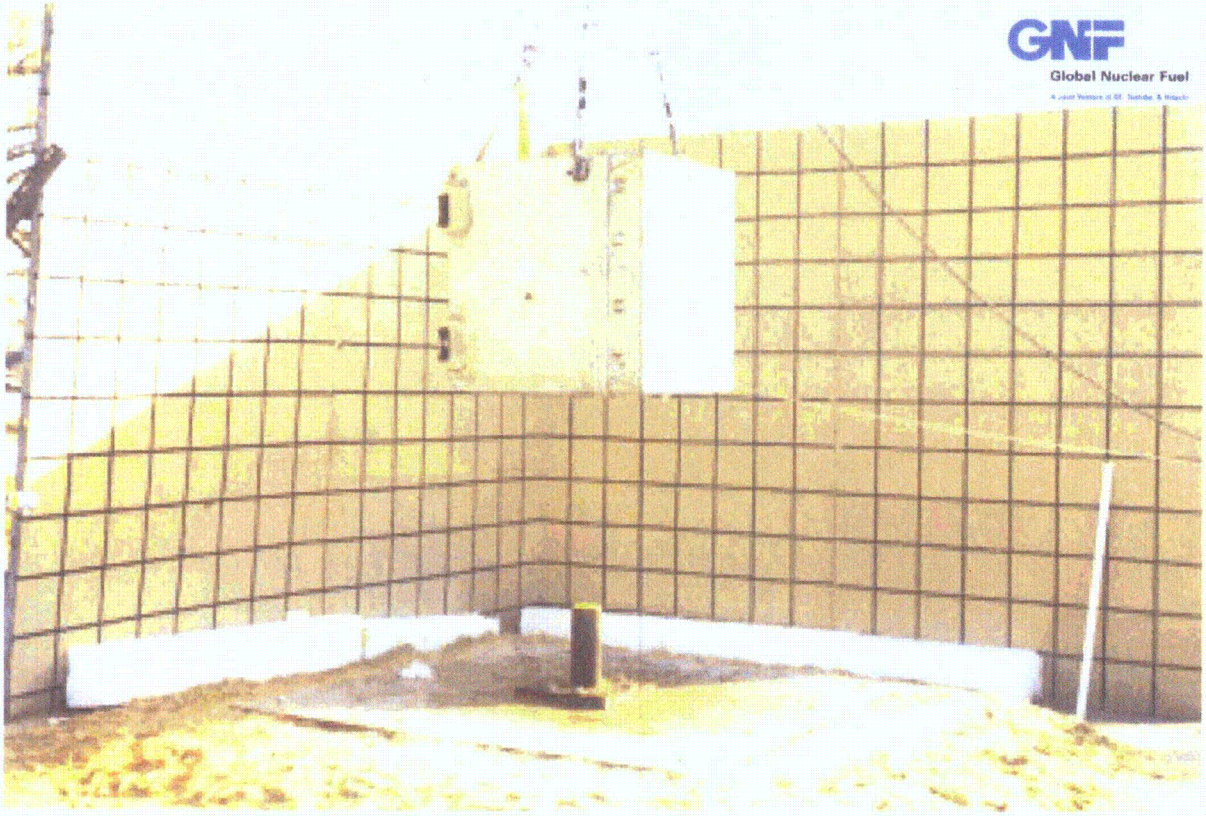

Figure 2.10.1-79 87 – CTU-4 Puncture Drop Test No. 12; HAC Puncture on Side

Figure 2.10.1-80 88 – CTU-4 Puncture Drop Test No. 12; Close-up View of Damage; ~1½" Deep

Figure 2.10.1-81 89 – CTU-4 Puncture Drop Test No. 13; HAC Oblique Drop on Side

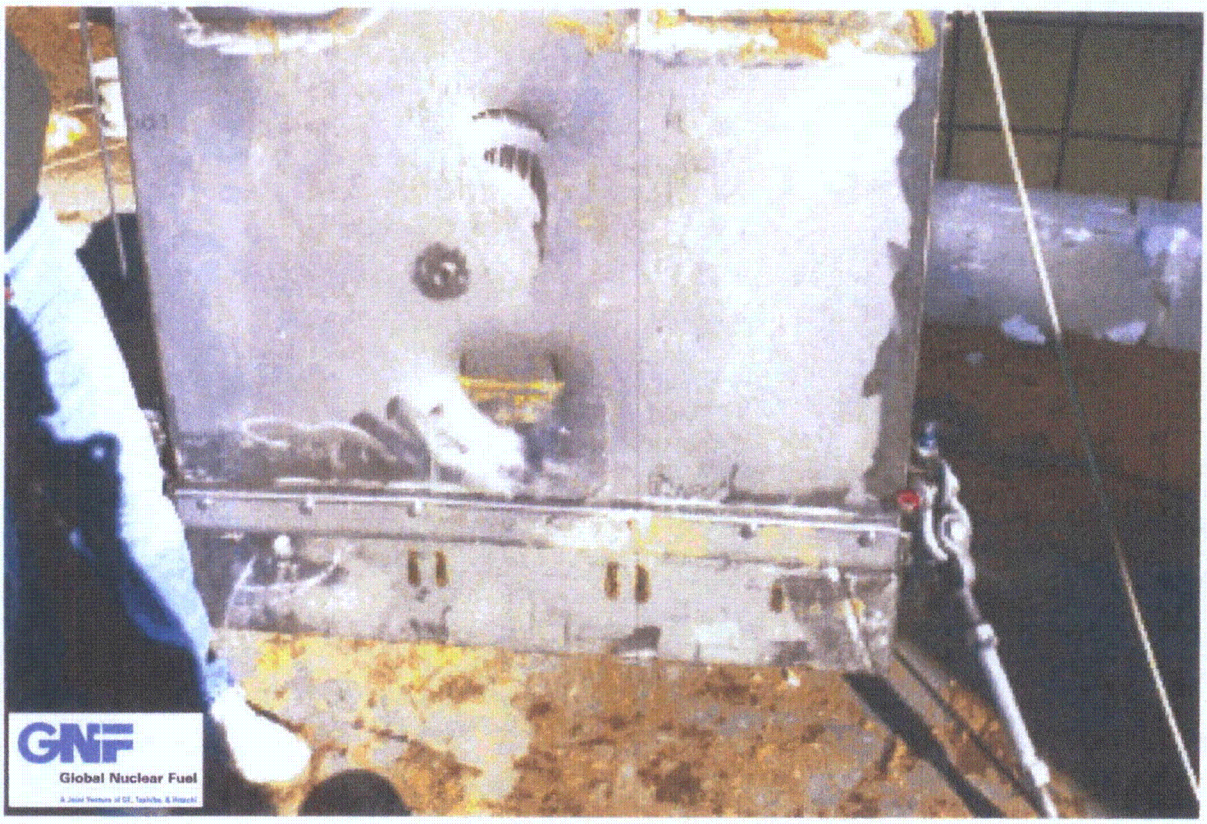

Figure 2.10.1-82 90 – CTU-4 Puncture Drop Test No. 13; View of Damage

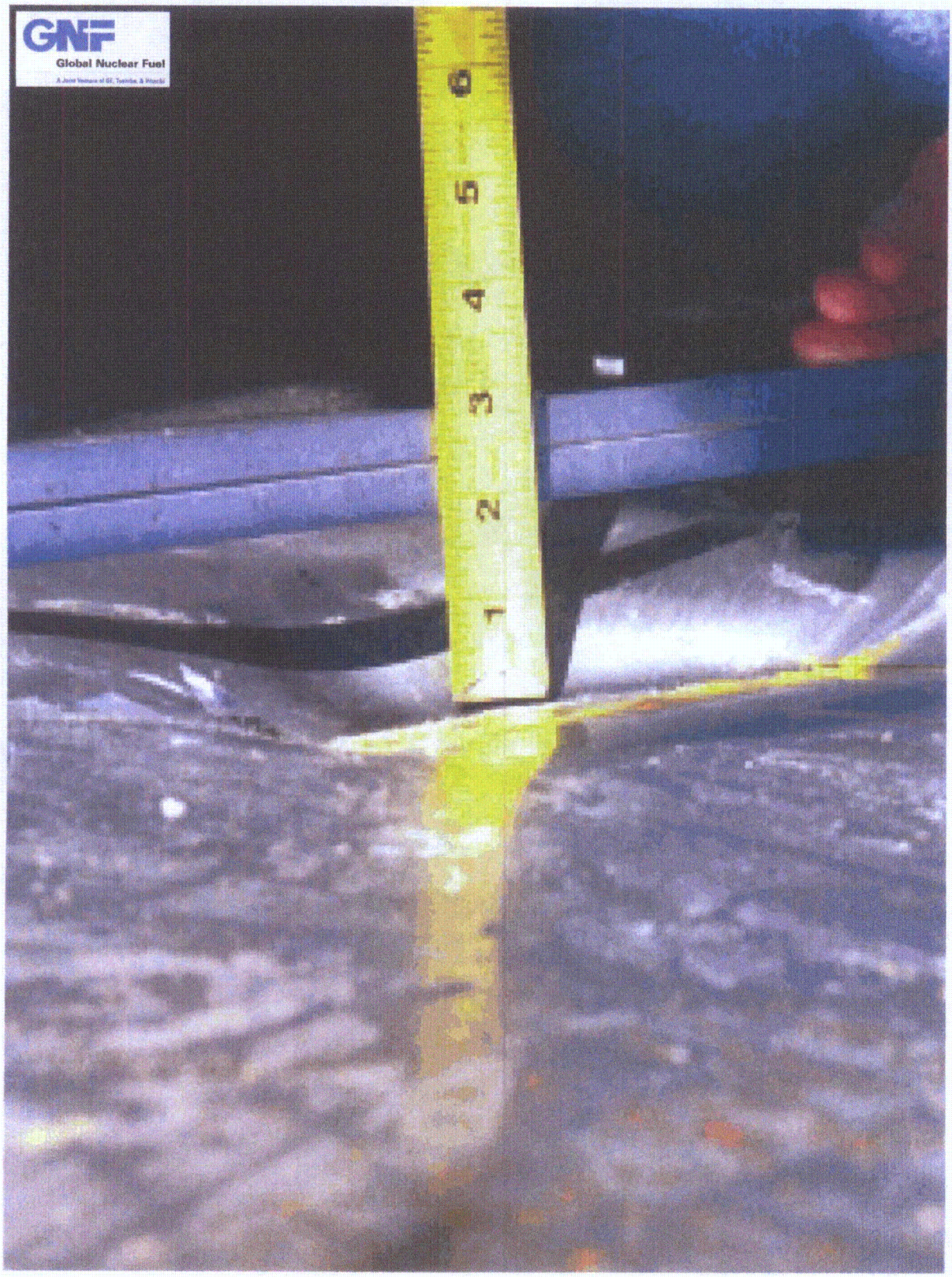
GNF
Global Nuclear Fuel
6
5
4
3
2
1

Figure 2.10.1-83 91 – CTU-4 Puncture Drop Test No. 13; Close-up View of Damage; ~1¾ Deep

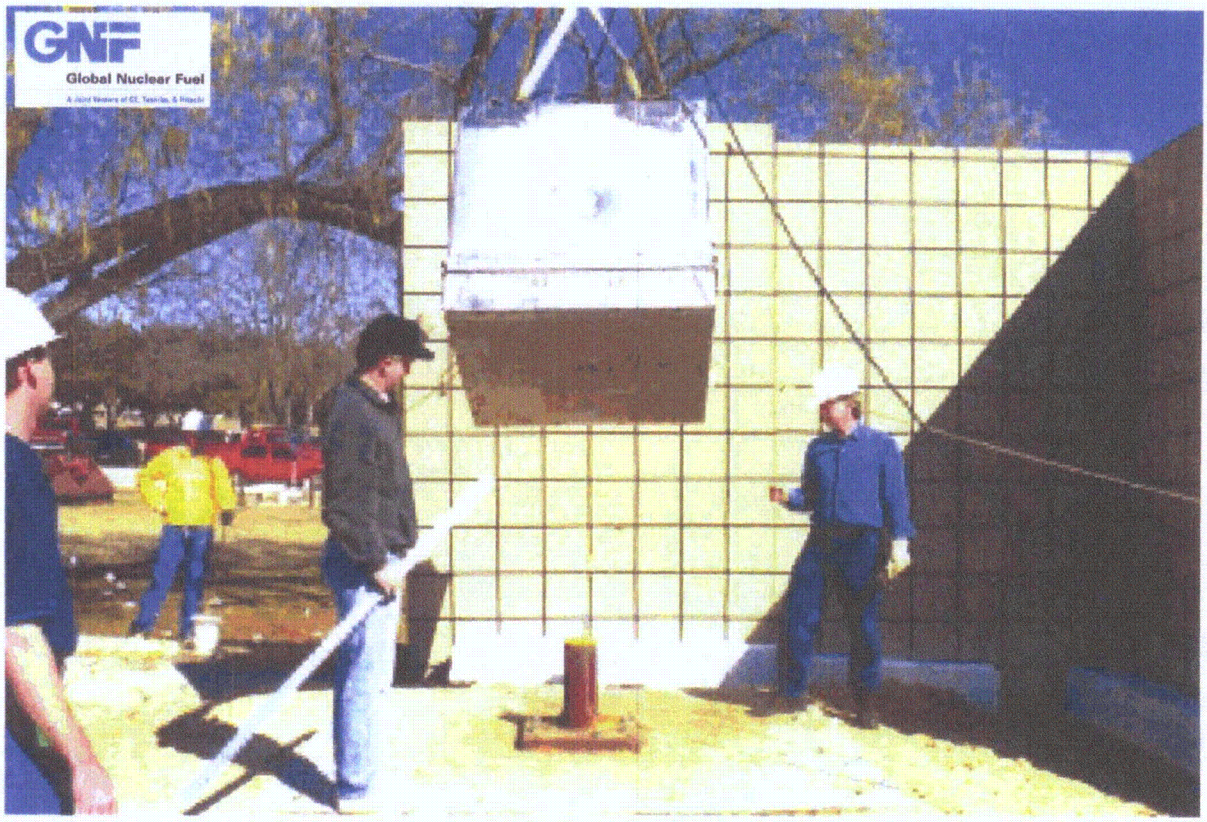

Figure 2.10.1-84 92 – CTU-4 Puncture Drop Test No. 14; HAC Oblique Puncture on OCA Lid

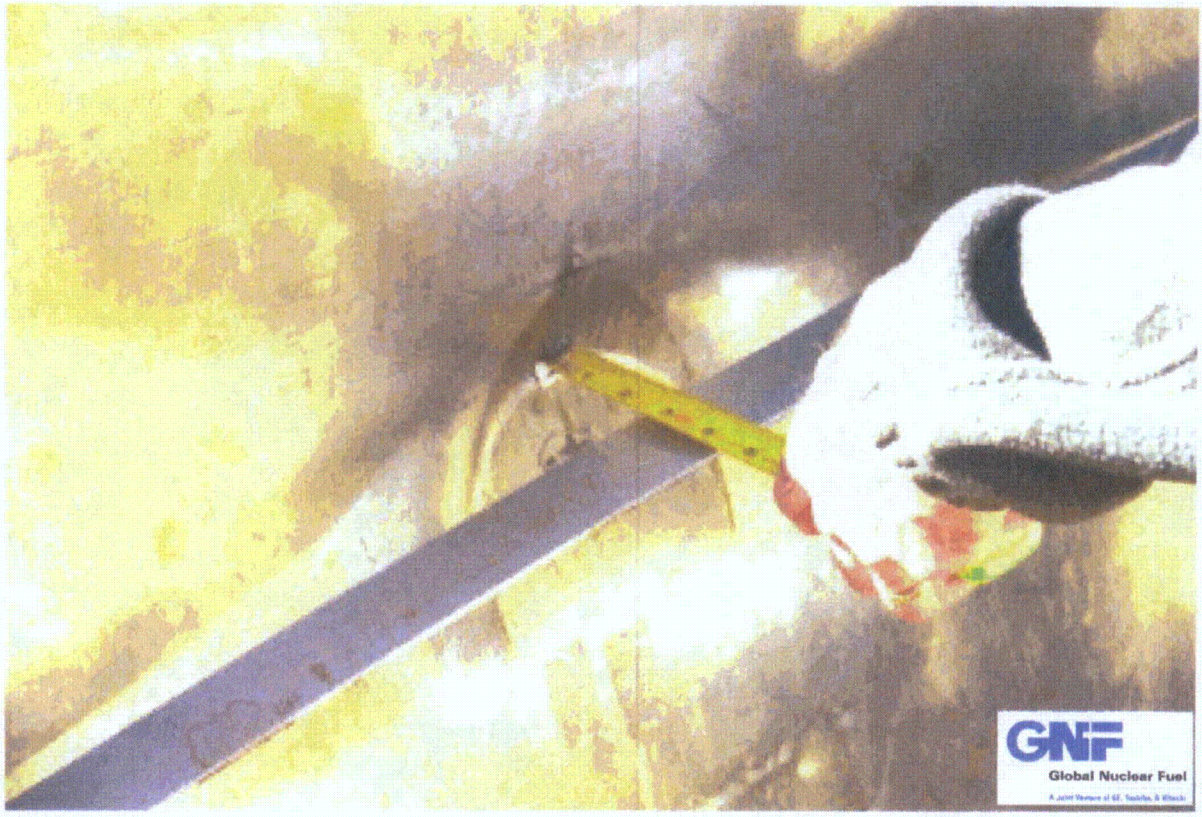

Figure 2.10.1-85 93 – CTU-4 Puncture Drop Test No. 14; Close-up of Damage; ~2½" Deep

Figure 2.10.1-86 94 – CTU-4 Post-Test Disassembly; View of Underside of OCA Lid

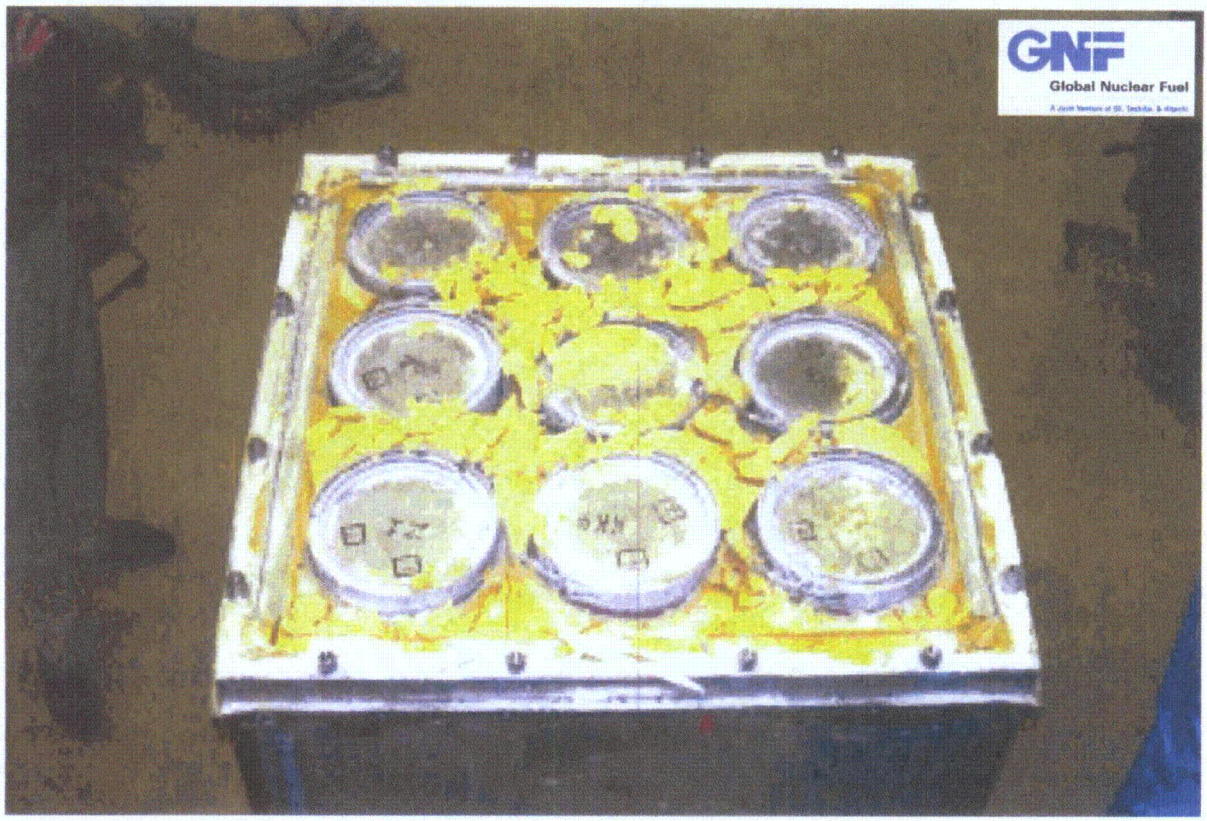

Figure 2.10.1-87 95 – CTU-4 Post-Test Disassembly; View of OCA Lid Foam Debris

Figure 2.10.1-88 96 – CTU-4 Post-Test Disassembly; View of Vertical Position of ICCAs

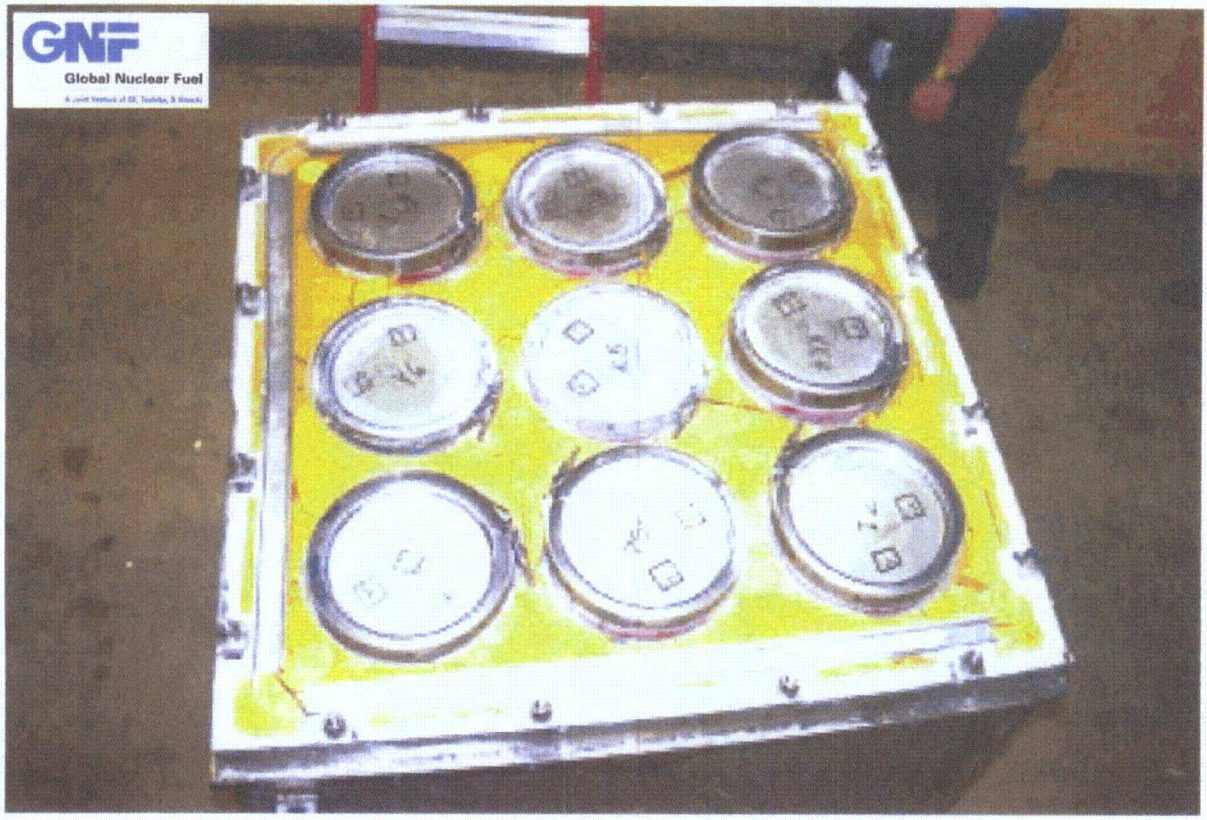

Figure 2.10.1-89 97 – CTU-4 Post-Test Disassembly; View of OCA Body and ICCAs

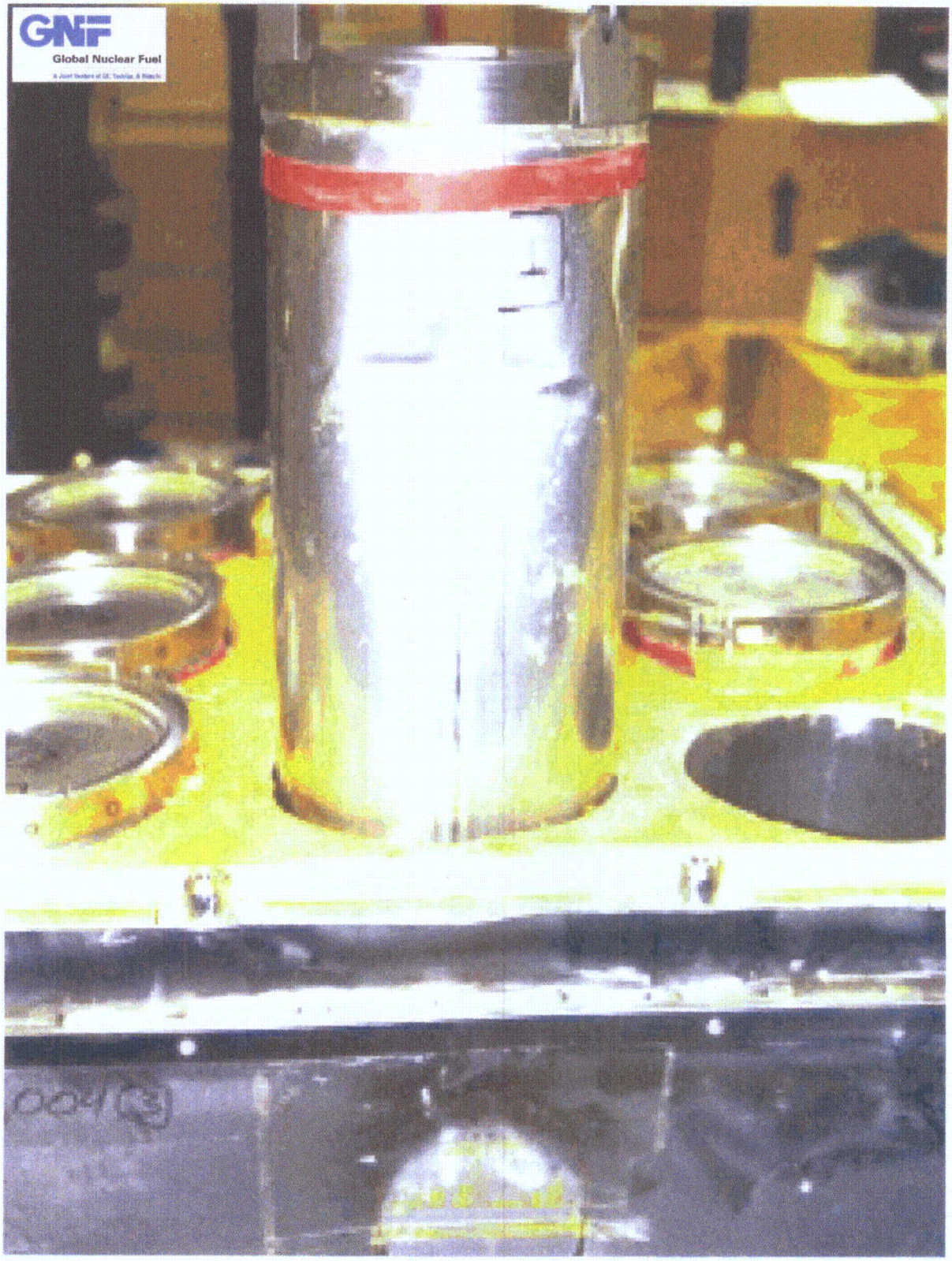

Figure 2.10.1-90 98 – CTU-4 Post-Test Disassembly; Close-up View of Damaged ICCA

2.10.2 Structural Dynamic Sensitivity Analysis

Presented herein are the results of a structural dynamic sensitivity analysis of the NPC package to demonstrate that the structural response of the NPC remains nearly the same across the tolerance range for the foam components of the package. The two most damaging orientations are presented.

The allowable material structural property variations for the polyurethane foam are stated in Section 8.1.4.1, Polyurethane Foam. In particular, the compressive strength variation of the polyurethane foam has the potential to affect the structural response of the NPC package to the HAC drop tests. In order to assess the effect of these deviations, a finite element analysis (FEA) was performed of the NPC package for the two most critical orientations: CG-over-OCA Lid, and OCA Side Edge.

The analysis utilized LS-DYNA[1] program to analyze the NPC package. The basic model was a full, 360-degree complete model of the NPC package. The model included elements for the OCA body (7,440 elements), the OCA lid (7,004 elements), the polyurethane foam (35,368 elements), the ceramic fiber board (13,324 elements), the ICCAs (63,072 elements), and the OCA socket head cap screws (3,456 elements). The total number of elements for the NPC package model was 129,664.

The sensitivity of the NPC package to the polyurethane foam compressive strength was evaluated by running the model with nominal, nominal - minus 15%, and nominal - plus 15% foam strengths. The amount of impact energy absorbed by each component of the package for a 30-foot HAC drop tests was then compared for the three data points. Each orientation will be discussed separately in the following sections.

2.10.2.1 CG-Over-OCA Lid Corner

This drop orientation was addressed by the testing of CTU-1. As discussed in Section 2.10.1.7.1.2, CTU-1 Free Drop Test No. 2, the impact resulted in severe buckling and folding of the OCA lid corner. The area of deformation was primarily limited to the lid reinforcement area. The resultant LS-DYNA analysis results of the NPC package for this orientation are illustrated in Figure 2.10.2-1 and Figure 2.10.2-2. As shown by these figures, the response of the model agrees well with the test results for this test orientation.

The model was run for the three polyurethane foam compressive strengths ranges. The percentages of the total impact energy absorbed by each major component are summarized for each compressive foam strength in Table 2.10.2-1. A summary of the percentage of the total energy absorbed by the individual foam densities is shown in Table 2.10.2-2.

Table 2.10.2-1 - Percentage of Total Kinetic Impact Energy Absorbed; CG-Over-OCA Lid

Compressive Foam Strength	Polyurethane Foam	OCA Lid	OCA Body	ICCAs	Ceramic Fiber Board
Nominal – 15%	11.7	63.0	6.0	0.3	6.0
Nominal	11.0	63.0	6.0	0.3	4.0
Nominal + 15%	10.2	62.0	6.0	0.3	3.0

[1] Livermore Software Technology Corporation, *LS-DYNA User's Manual*, Report 1082, June 1, 1997

Table 2.10.2-2 - Percentage of Kinetic Impact Energy Absorbed for Each Foam Density

Compressive Foam Strength	7 lbs/ft^3	11 lbs/ft^3	15 lbs/ft^3	40 lbs/ft^3
Nominal – 15%	2.0	2.9	3.8	3.0
Nominal	1.9	3.0	3.4	2.7
Nominal + 15%	1.6	2.8	3.4	2.4

As demonstrated by these values, the allowable compressive strength variations for the polyurethane foam have insignificant affect on the overall package response. Therefore, it can be concluded that the impact performance NPC package is not sensitive to the allowable compressive foam variations for the CG-over OCA lid corner orientation.

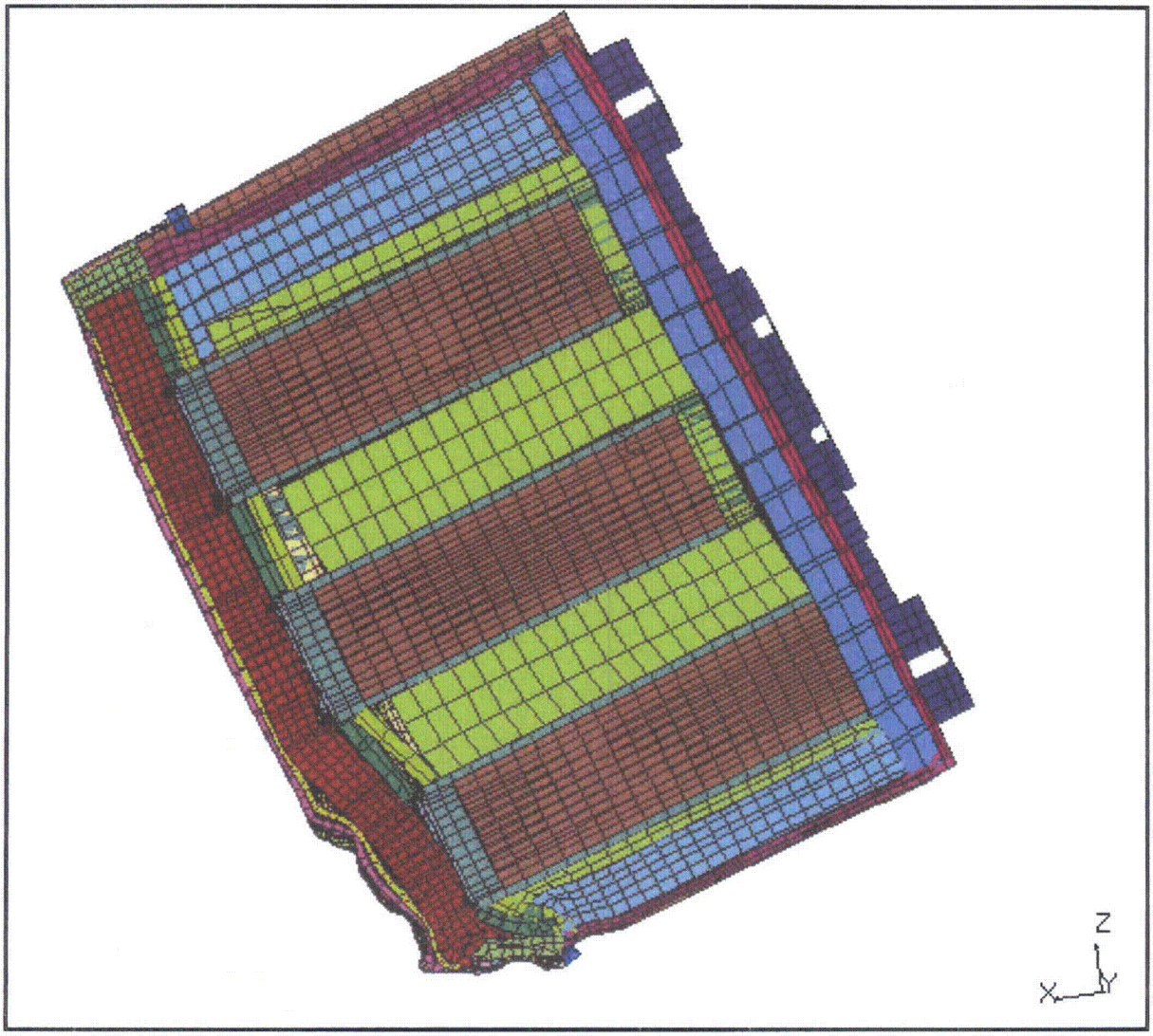

Figure 2.10.2-1 - LS-DYNA Model Results for CG-over-OCA Lid; Cross-section Side View

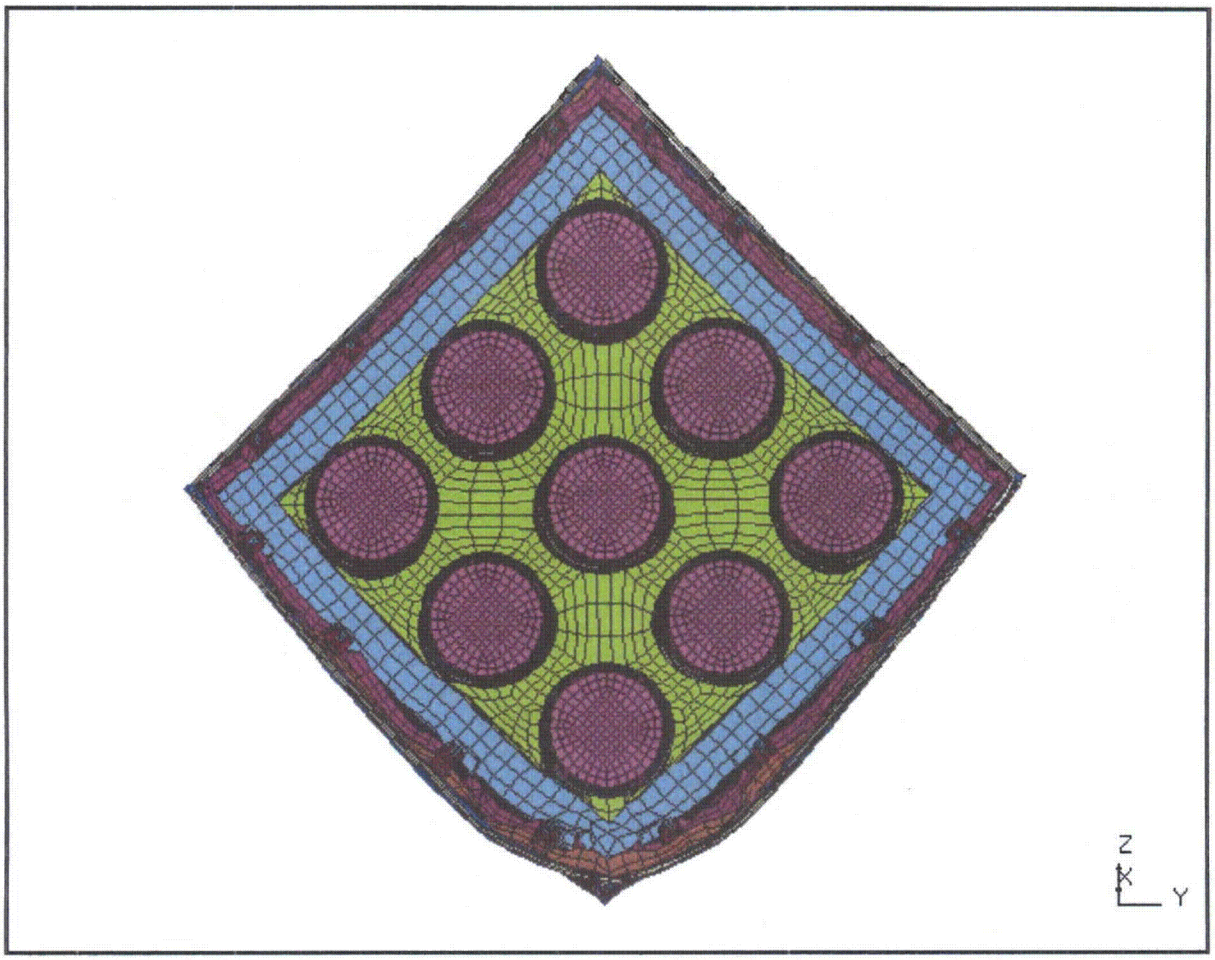

Figure 2.10.2-2 - LS-DYNA Model Results for CG-over-OCA Lid; Cross-section End View

2.10.2.2 OCA Side Edge

This drop orientation was addressed by the testing of CTU-2. As discussed in Section 2.10.1.7.2.2, CTU-2 Free Drop Test No. 4, the impact resulted in a flat measuring approximately 9 inches in width. The area of deformation was limited to the impacted side edge. The resultant LS-DYNA analysis results of the NPC package for this orientation are illustrated in Figure 2.10.2-3 and Figure 2.10.2-4. As shown by these figures, the response of the model agrees well with the test results for this test orientation.

The model was run for the three polyurethane foam compressive strengths ranges. The percentages of the total impact energy absorbed by each major component are summarized for each compressive foam strength in Table 2.10.2-3. A summary of the percentage of the total energy absorbed by the individual foam densities is shown in Table 2.10.2-4.

As demonstrated by these values, the allowable compressive strength variations for the polyurethane foam have insignificant affect on the overall package response. Therefore, it can be concluded that the impact performance NPC package is not sensitive to the allowable compressive foam variations for the OCA side edge orientation.

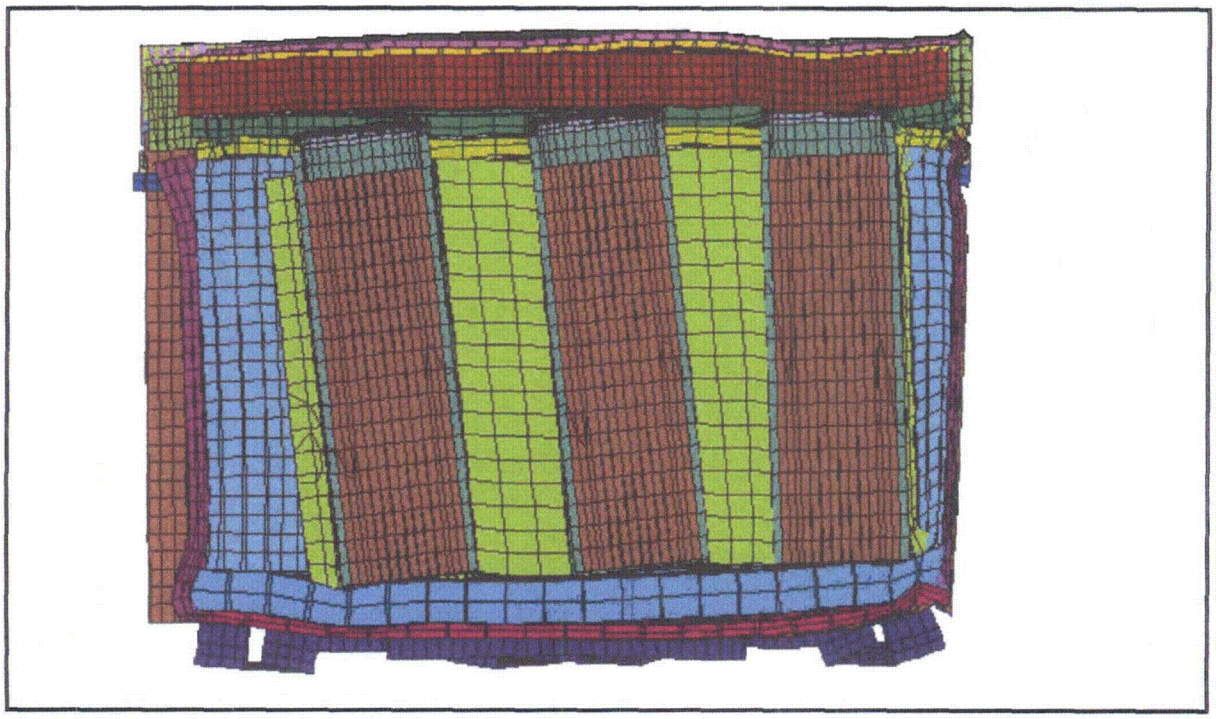

Figure 2.10.2-3 - LS-DYNA Model Results for OCA Side Edge; Cross-section Side View

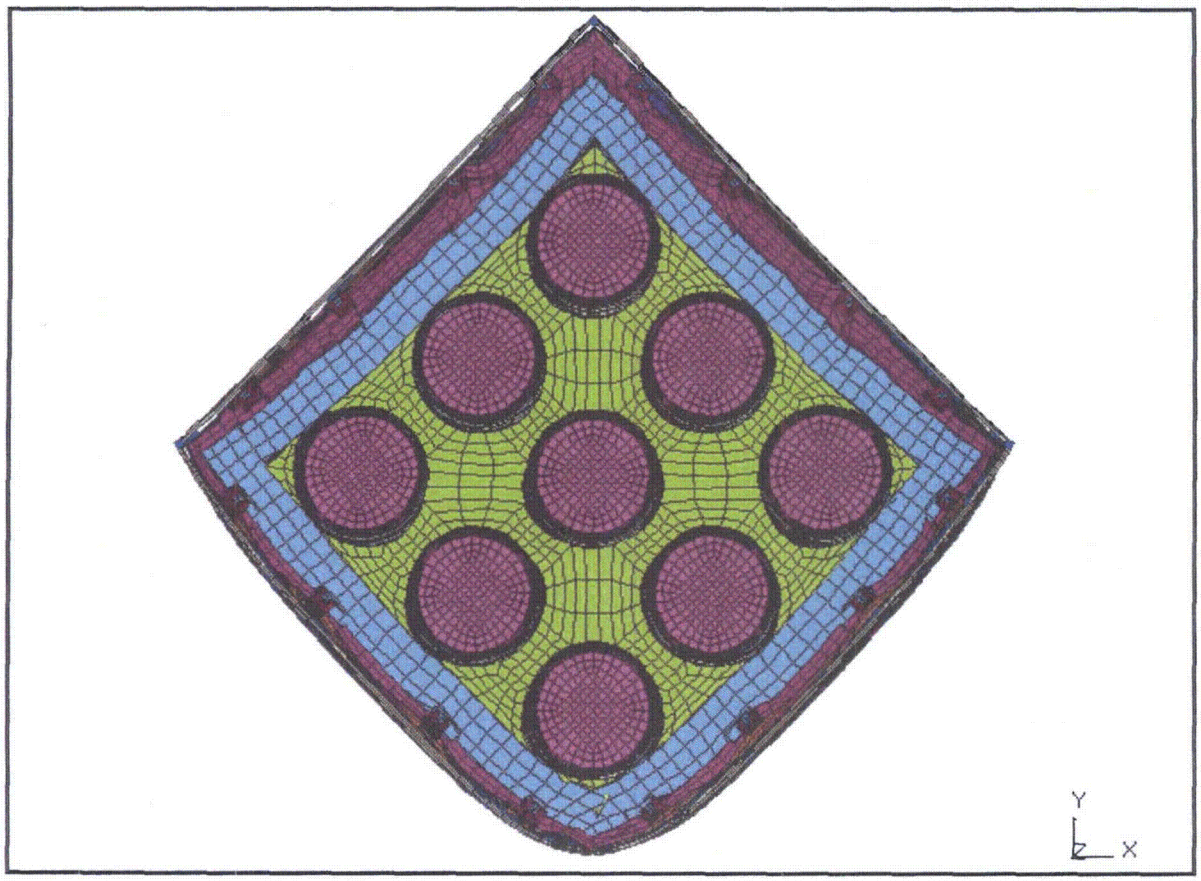

Figure 2.10.2-4 - LS-DYNA Model Results for OCA Side Edge; Cross-section End View

Table 2.10.2-3 - Percentage of Total Kinetic Impact Energy Absorbed; OCA Side Edge

Compressive Foam Strength	Polyurethane Foam	OCA Lid	OCA Body	ICCAs	Ceramic Fiber Board
Nominal – 15%	32.6	24.0	28.0	0.5	11.0
Nominal	31.2	25	29.0	0.4	10.0
Nominal + 15%	29.6	25.0	28.0	0.4	9.0

Table 2.10.2-4 - Percentage of Kinetic Impact Energy Absorbed for Each Foam Density

Compressive Foam Strength	7 lbs/ft^3	11 lbs/ft^3	15 lbs/ft^3	40 lbs/ft^3
Nominal – 15%	9.7	14.2	2.0	6.7
Nominal	9.7	13.7	2.1	5.7
Nominal + 15%	9.0	13.4	2.0	5.2

3.0 THERMAL

3.1 Discussion

This chapter establishes the compliance of the GNF NPC packaging to transport a payload of up to 1,190 pounds (540 kg) of 5 weight percent (w/o) maximum enrichment uranium oxide powder to the thermal requirements of 10 CFR 71[1].

3.2 Summary of Thermal Properties of Materials

Analysis of the heat transfer within the NPC requires that thermal properties be defined for the materials used in their fabrication. Only properties for materials that constitute a significant heat transfer path are defined.

The NPC consists of an outer stainless steel sheet metal body and closure lid (OCA) that encases ceramic fiber insulation and polyurethane foam, and nine equally spaced individually sealed stainless steel canisters (ICCAs). The closure of each canister is provided by a closure lid with a silicone rubber gasket and a stainless steel bolted band clamp assembly. The cylindrical outer surface of each canister is wrapped with a minimum 20-mil0.020" cadmium sheet, a 15-mil0.015" High Density Polyethylene (HDPE) sheet (total wrapped to achieve a minimum hydrogen areal density of 0.199 grams/cm^{2}thickness of 1/2-inch minimum), and a 24-gauge stainless steel wrapper.

The thermal properties of the principal materials used in the thermal evaluations are presented in Tables 3.2-1 and 3.2-2. The uranium oxide powder is not represented in this analysis as the worst case temperatures are achieved when the canisters are filled with lower conductivity air. Additionally, since the ceramic fiber board insulation has a conductivity commensurate with that of 11-15 lb/ft^2 foam, all portions of the package that contained ceramic fiber board were modeled with the same material properties as the adjacent foam. Since the material properties of the NPC package construction material do not vary significantly within the anticipated operational temperature range (-40 °F through 100 °F), the material properties are assumed to be constant for the purposes of this analysis.

The polyethylene and stainless steel in the canister walls was combined into a homogeneous material that would provide equivalent thermal mass and axial thermal conduction. The thermal effects of the cadmium sheeting were ignored, which conservatively increases the axial canister temperature gradients, as well as overpredicting the maximum canister and payload temperatures. The effective material properties are calculated as follows:

[1] Title 10, Code of Federal Regulations, Part 71 (10 CFR 71), *Packaging and Transportation of Radioactive Material*, 1-1-98 Edition.

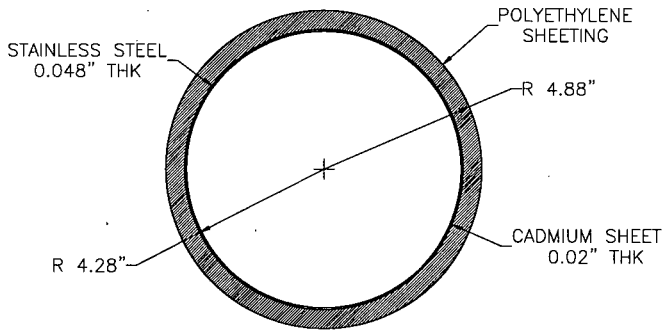

$$k_{eff} = \frac{A_1k_1 + A_2k_2}{A_1 + A_2} = \frac{1.29(0.725) + 16.73(0.018)}{18.02} = 0.069\frac{Btu}{hr - in - °F}$$

$$\rho_{eff} = \frac{A_1\rho_1 + A_2\rho_2}{A_1 + A_2} = \frac{1.29(0.281) + 16.73(0.035)}{18.02} = 0.053\frac{lb}{in^3}$$

$$c_{p_{eff}} = \frac{A_1\rho_1c_{p_1} + A_2\rho_2c_{p_2}}{(A_1 + A_2)\rho_{eff}} = \frac{1.29(0.281)0.111 + 16.73(0.035)0.53}{18.02(0.053)} = 0.37\frac{Btu}{lb - °F}$$

Since the heat generation of the payload is negligible (Section 3.3), the radial conductivity of the canister will have a negligible effect on package temperatures. Therefore, it was not calculated.

Table 3.2-1 - Material Properties

Material	Temperature, °F	Thermal Conductivity, Btu/hr-in-°F	Specific Heat, Btu/lb$_m$-°F	Density, lb$_m$/in^3	Notes
Type 304L Stainless Steel	100.0	0.725	0.111	0.281	①
Polyurethane Foam					
7 lb/ft^3		0.0018		0.0041	
11 lb/ft^3	100.0	0.0020	0.347	0.0064	②
15 lb/ft^3		0.0023		0.0087	
40 lb/ft^3		0.0040		0.0231	
Ceramic Fiber Board	100.0	0.0022	0.28	0.0087	③
Polyethylene Sheeting	100.0	0.018	0.53	0.035	④
Air	100.0	0.0013	0.24		⑤
Canister Walls (SS/Polyethylene)	100.0	0.069	0.37	0.053	

Notes:

① ASME Code [6], Section II, Part D, Table TCD for Thermal Conductivity and Specific Heat. Density from Table NF-2.

② General Plastics, *Last-A-Foam FR-3700 for Crash and Fire Protection of Nuclear Material Shipping Containers,* Tacoma, WA, February 1999.

③ Rohsenow, W. M. and J. P. Hartnett, *Handbook of Heat Transfer*, Table 28, McGraw Hill Publishing, New York, 1973 provides a conductivity for ceramic fiber insulation of 0.0022 Btu/hr-in-°F at 100 °F, which is commensurate in value with polyurethane foam of 11-15 pcf. *Unifrax Duraboard LD*

Product Specifications, Standard Oil Engineered Materials, reports a conductivity for Duraboard LD of 0.0037 Btu/hr-in-°F at 400 °F. Data at lower temperatures is not available.

④ MatWeb, Inc., *Material Properties of High Density Polyethylene (HDPE), Injection Molded*, 1999. Conductivity based on an average of three HDPE products varying in conductivity from 0.014 to 0.024 Btu/hr-in-°F.

⑤ Y.S. Touloukian, *Specific Heat – Nonmetallic Liquids and Gases*, Thermophysical Properties Research Center Data Series, Volume 6, Purdue University, 1970. Density of air increased to 0.0064 lb/in^3 to increase model stability for transient evaluation, which is beyond the scope of this report. Effect on model temperatures due to this assumption is negligible.

Table 3.2-2 - Material Properties, Surface Emittance, Absorptivity

Component	Material	Surface Emittance	Solar Absorptivity	Notes
Package Exterior	Type 304L SS	0.50	0.5	①
Package Interior Surfaces	Type 304L SS	0.50	NA	①

Note:

① Value from Gubareff, F. F., Janssen, J. E., and Torborg, R. H., *Thermal Radiation Properties Survey*, Honeywell Research Center, Minneapolis, Minnesota, 1960

3.3 Technical Specification for Components

The NPC may contain up to 0.05 Ci of U-235 and 0.15 Ci of U-238 based on a 1,190 pounds (540 kg) total payload of UO_2 uranium bearing material with 5 w/o enrichment. Since U-235 generates 0.027 watts/Ci, and U-238 generates 0.025 watts/Ci the total radiolytic decay heat for the NPC will be 0.005 watts (0.017 Btu/hr), which is negligible.

The containment for the NPC package is provided by the ICCAs. The minimum and maximum allowable temperatures for the silicone rubber ICCA seals are -60 °F to 450 °F, respectively[2]. Since the structural integrity of the package is established by testing, the only pertinent temperature limits on the components are established by their melting temperatures for the fire-based Hypothetical Accident Condition (HAC). The melting temperatures for stainless steel, polyethylene and cadmium are 2,850 °F, 350 °F and 610 °F, respectively.

3.4 Thermal Evaluation for Normal Conditions of Transport

Although the total decay heat load of the NPC package is less than 0.1 Btu/hr, a detailed analysis of the package is required to determine the effects of insolation on the stainless steel outer shell and the impact absorbing foam. To accomplish this an analytical model of the package was constructed using the Heating 7.3 computer program[3]. Heating 7.3 is a finite difference thermal analysis code capable of solving steady-state and transient thermal analysis problems in one, two or three dimensions in a rectangular, cylindrical or spherical coordinate system. It is capable of modeling heat transfer via a combination of conduction, radiation and both natural and forced convection. Heating 7.3 was developed by Oak Ridge National Laboratories as part of the SCALE4.3 package and has been used extensively in the packaging industry for thermal evaluations of packages for both onsite transfer and storage.

The Heating 7.3 thermal model, Figure 3.4-1, utilizes quarter section symmetry in a X-Y-Z coordinate system. Accordingly, the canister walls were modeled with a rectangular cross section of equivalent area to provide equivalent axial conduction. In addition, as presented in Section 3.2, *Summary of Thermal Properties of Materials*, the material properties of the stainless steel and polyethylene of the ICCAs were homogenized. Certain package details, such as the bolting flange and the fork lift attachments, do not significantly affect the heat transfer characteristics of the

[2] Parker Seals, *O-Ring Handbook*, OR5700, Parker Seal Company, Lexington, KY.

[3] Oak Ridge National Laboratory, *Heating 7 Multidimensional, Finite Difference Heat Conduction Analysis System*, Version 7.3, PSR-199, Radiation Information Computational Center, Oak Ridge, TN.

package, and therefore were not modeled. The input and output files for the Heating 7.3 model are listed in Sections 3.6.1.1, *Heating 7.3 NCT Thermal Model Input for Maximum Surface Temperature*, and 3.6.1.2, *Payload Temperature During HAC Fire Event*, respectively.

Heat from insolation is transferred through the package via conduction and is dissipated from package surfaces via natural convection and radiation to the ambient environment. Natural convection heat transfer coefficients vary as a function of the surface temperature and orientation. Convective heat transfer from the base of the package will be considerably less than from the top and sides, and was conservatively neglected. Turbulent natural convective heat transfer coefficients for the top and vertical sides were conservatively assumed and are summarized in Table 3.4-1.

Per 10 CFR §71.71(c)(1), the worst-case high temperature conditions for the package consist of an ambient temperature of 100 °F and maximum insolation per Table 3.4-2, and the application of the stainless steel solar absorptivity value from Table 3.2-2. Under those conditions, the worst case surface temperature for the NPC package would be 174 °F, as presented in Table 3.4-3 and Figure 3.4-2. Bulk polyurethane foam temperatures for the OCA lid and OCA body are 149 °F and 131 °F, respectively. All NCT package temperatures are well within the material limits presented in Section 3.3, *Technical Specification for Components*.

Given the negligible decay heat, the maximum temperature for all surfaces of the NPC package in shade with an ambient temperature of 100 °F (38 °C) is 100 °F (38 °C). This temperature is below the maximum acceptable surface temperature of 122 °F for non-exclusive use shipments as stipulated in 10 CFR §71.43(g). Similarly, the package temperature will be equal to ambient under the low temperature conditions of -20 °F and -40 °F.

Table 3.4-1 - Natural Convective Heat Transfer Coefficients for NPC Package

Surface Orientation	Heat Transfer Coefficient (Btu/hr-in^2-°F)①
Horizontal – Heated Surface Facing Up	$0.0015\Delta T^{1/3}$
Vertical	$0.0013\Delta T^{1/3}$

Note:

① ① Lindeburg, M. R., *Mechanical Engineering Reference Manual*, Table 10.7, Professional Publications, Belmont, CA, 1994

Table 3.4-2 - NPC Package NCT Maximum Insolation Values

Form and Location of Surface	Total Insolation for a 12-Hour Period	
	(gcal/cm^2)	(Btu/in^2)
Flat surfaces transported horizontally:		
• Base	None	None
• Other surfaces	800	20.49
Flat surfaces not transported horizontally	200	5.12
Curved surfaces	400	10.24

Table 3.4-3 - NPC Package NCT Maximum Temperatures

Component	Maximum Temperature (ºF)
OCA Lid Outer Skin	174
Bulk OCA Lid Foam	149
OCA Lid Braided Rope	135
ICCA Maximum Temperature	147
OCA Body Foam Maximum	143
Bulk OCA Body Foam	131
OCA Body Outer Skin	130
Bulk Payload	133

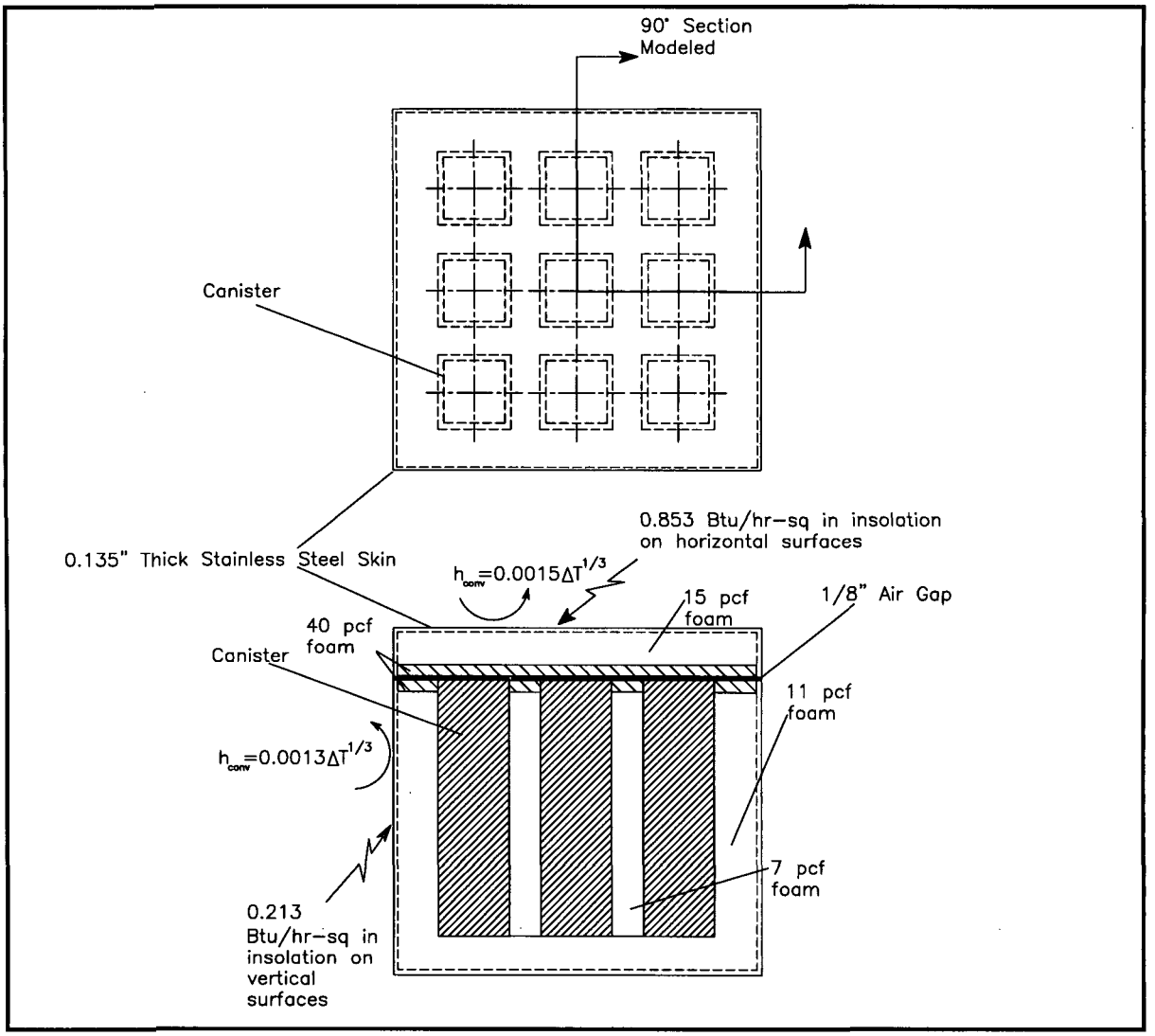

Figure 3.4-1 - Geometrical Assumptions for Heating 7.3 Thermal Model of NPC

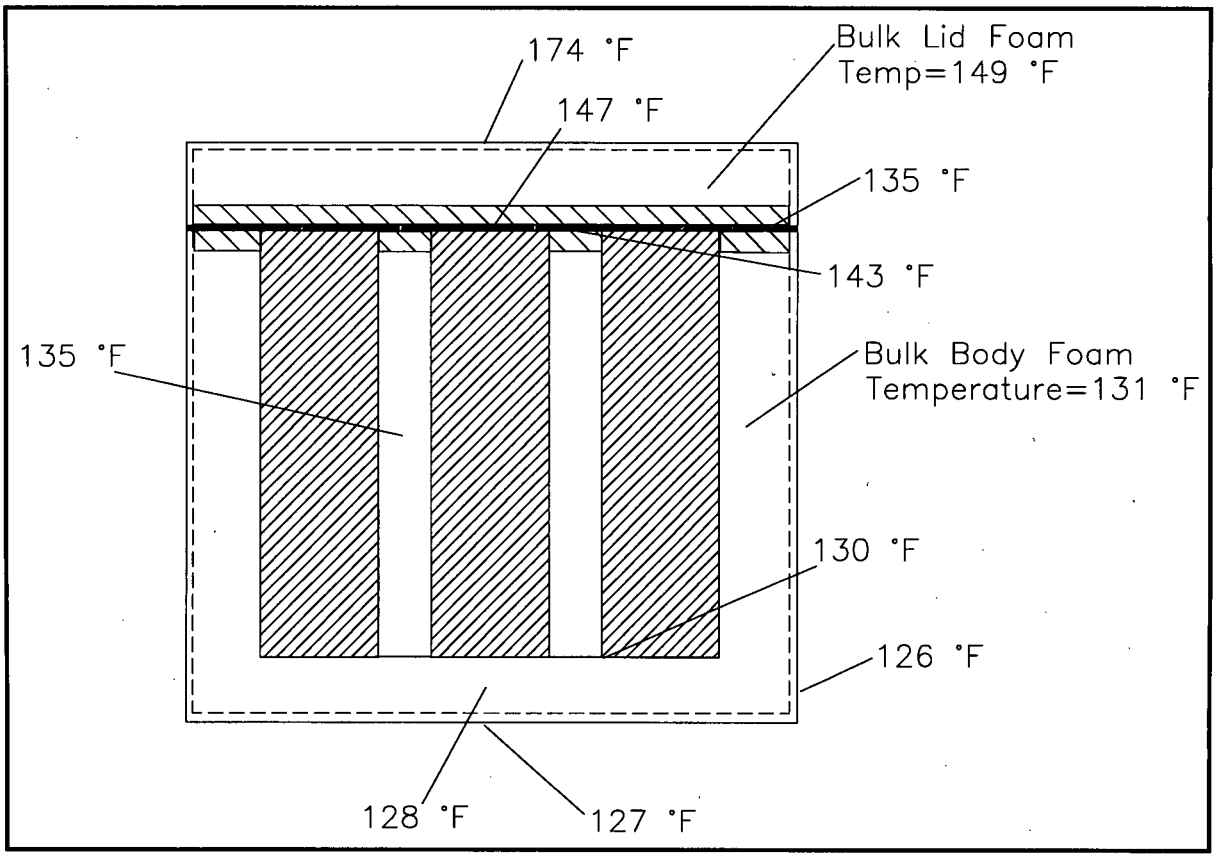

Figure 3.4-2 - NPC Package NCT Temperatures

3.4.1 Maximum Internal Pressures

The containment of the NPC package is provided by the nine ICCAs. The determination of the maximum internal pressure within the ICCAs is based on the ideal gas law. If an ICCA is filled at the minimum normal operating temperature, -40 °F and is allowed to reach the NCT maximum bulk temperature for the payload, 133 °F, the maximum pressure would be the product of the ratio of the absolute gas temperature to -40 °F and atmospheric pressure, 14.7 psia. Specifically,

$$\frac{P_{133\,°F}}{P_{-40\,°F}} = \frac{T_{airmax}}{T_{init}}$$

$$\frac{P_{133\,°F}}{14.7\text{ psia}} = \left[\frac{133+460}{-40+460}\right]$$

$$P_{133\,°F} = 20.8\text{ psia or } 6.1\text{ psig (MNOP)}$$

The maximum pressure is less than the ICCA maximum design pressure.0 of 10 psig.

3.4.2 Maximum Thermal Stresses

Due to the design of the package and the negligible decay heat load, the thermal stresses within the package are negligible.

3.4.3 Evaluation of Package Performance for Normal Conditions of Transport

As discussed in the previous sections, all of the temperatures that may be experienced by the NPC package during normal conditions of transport are within acceptable limits.

3.5 Thermal Evaluation for Hypothetical Accident Conditions

The performance of the NPC package under Hypothetical Accident Conditions (HAC) was determined via testing in accordance with 10 CFR §71.7173. Specifically, an NPC package was placed into an open pool fire environment that resulted in the average surface temperature of the package to at least 1,475 °F. During the 30-minute fire test, the maximum surface temperatures of the test articles reached 2,029 °F (CTU-1), 2,184 °F (CTU-2), and 2,151 °F (CTU-3). Following the fire test, the packages were allowed to cool in air without any forced cooling.

A post-test examination of the CTUs indicated that the packages were intact, with no structural failures of the OCA or any ICCA. A significant amount of the polyurethane foam was consumed by the fire, adding its combustion energy to that of the forced convection from the flames. Additionally, the peak temperatures recorded in the test were well below the melting temperature of the stainless steel (2,850 °F).

As noted in Appendix 3.6.3, *Material Property Sensitivity Study*, the worst-case ICCA gasket temperature would increase by approximately 16% above the maximum recorded temperature for an ICCA. The maximum recorded gasket temperature for any ICCA was 340 °F, as discussed in Appendix 2.10.1, *Certification Tests*. Therefore, the worst-case peak ICCA gasket temperature would be 394 °F, which is below the maximum continuous-use temperature rating for silicone rubber of 450 °F.

3.5.1 Maximum Internal Pressure

The maximum ICCA external surface temperature during the fire test is 340 °F (Section 2.10.1). Internal cavity temperatures were not monitored. The worst case internal payload temperature was calculated in Appendix 3.6.2 by creating an axisymmetric model of the canister and payload in an inverted position that was exposed to the worst case ICCA surface temperatures per Section 2.10.1 for 30 minutes. This is conservative as it applies the maximum fire temperatures for the entire duration of the fire event.

The maximum calculated average payload temperature is 250°F. The partial pressure due to air is

$$\frac{P_{Air}}{P_{-40\,°F}} = \frac{T_{airmax}}{T_{init}}$$

$$\frac{P_{Air}}{14.7\text{ psia}} = \left[\frac{250+460}{-40+460}\right]$$

$$P_{Air} = 24.9\text{ psia}$$

The partial pressure due to water is taken at the minimum payload cavity temperature, which is 202.7 °F, is 12.2 psia. The maximum HAC pressure in the canister is therefore:

$$P_{HAC} = P_{Air} + P_{water} = 24.9 + 12.2 = 37.1\,\text{psia} = 22.4\,\text{psig}$$

This maximum pressure is below the ICCA design pressure of 24.0 psigThe maximum temperature reached in the ICCA during the fire test is 340 °F. This results in a maximum canister pressure of 7.6 psig, which is below the maximum ICCA design pressure of 10 psig.

3.5.2 Maximum Thermal Stresses

The effects of HAC thermal stresses were addressed by the fire test. No damage due to thermal stresses was found during post-test examination of the test article.

3.5.3 Evaluation of the Package Performance for the Hypothetical Accident Thermal Conditions

Based the thermal tests performed on the NPC package, none of the components exceeds its temperature limit as described in Section 3.3. Specifically, the seals and polyethylene sheeting for all the nine ICCAs were observed to be intact, and operational after the fire and cool down period. This condition verifies that the NPC package satisfies the HAC thermal requirements set forth by 10 CFR §71.73(c)(4).

3.6 Appendix

3.6.1 Heating 7.3 NCT Thermal Model Input for Maximum Surface Temperature

Figures 3.6-1a and b provide a schematic drawing of the Heating 7.3 model of the NPC package. Appendix 3.6.1.1 provides the input file for the high temperature NCT case. Appendix 3.6.1.2 provides the temperature maps from the same case. Note that, per Section 3.2, the ceramic fiber board was modeled as having the same properties as the adjacent foam.

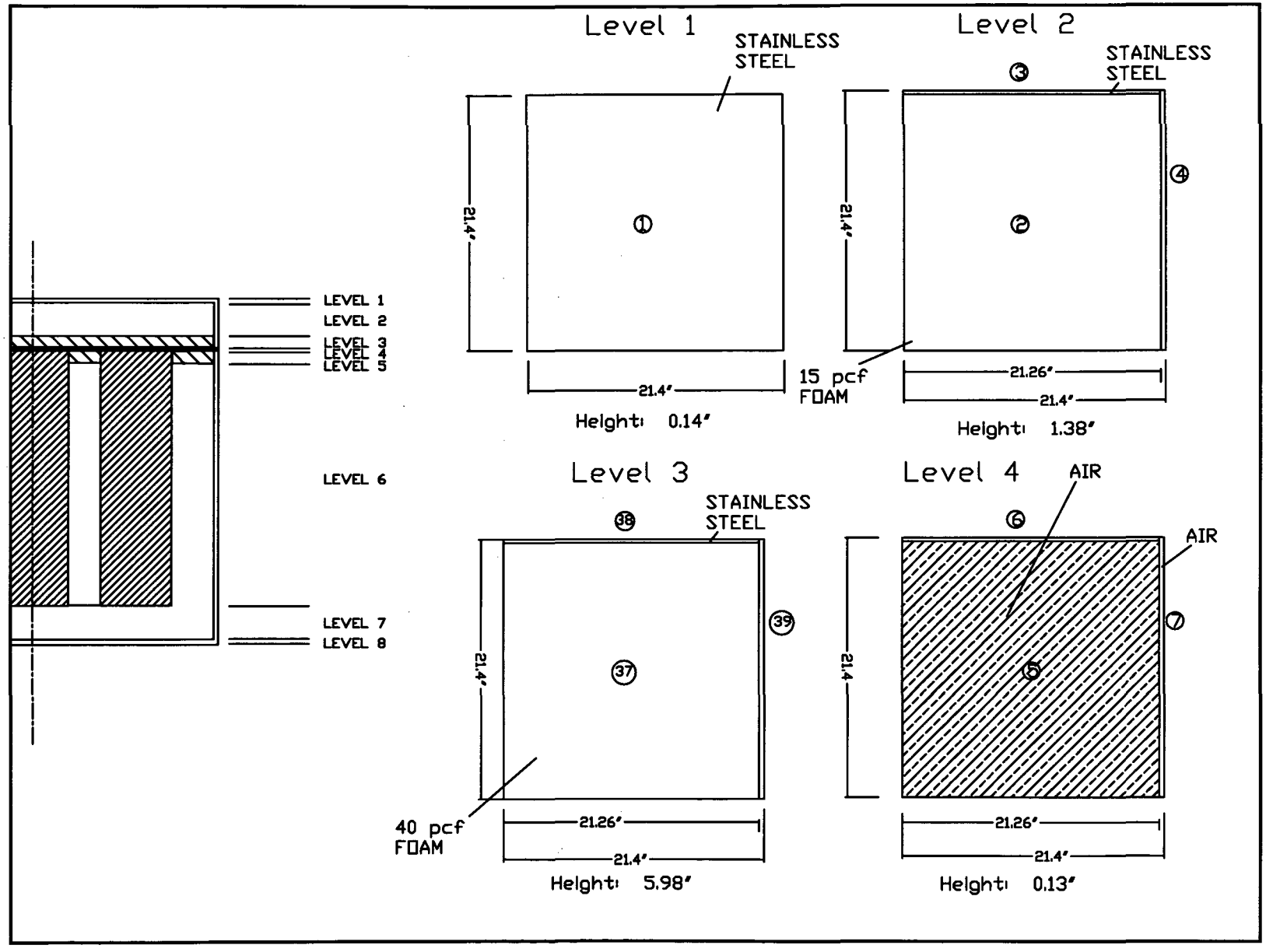

Figure 3.6-1a - Heating 7.3 Thermal Model Schematic, Level 1 through Level 4

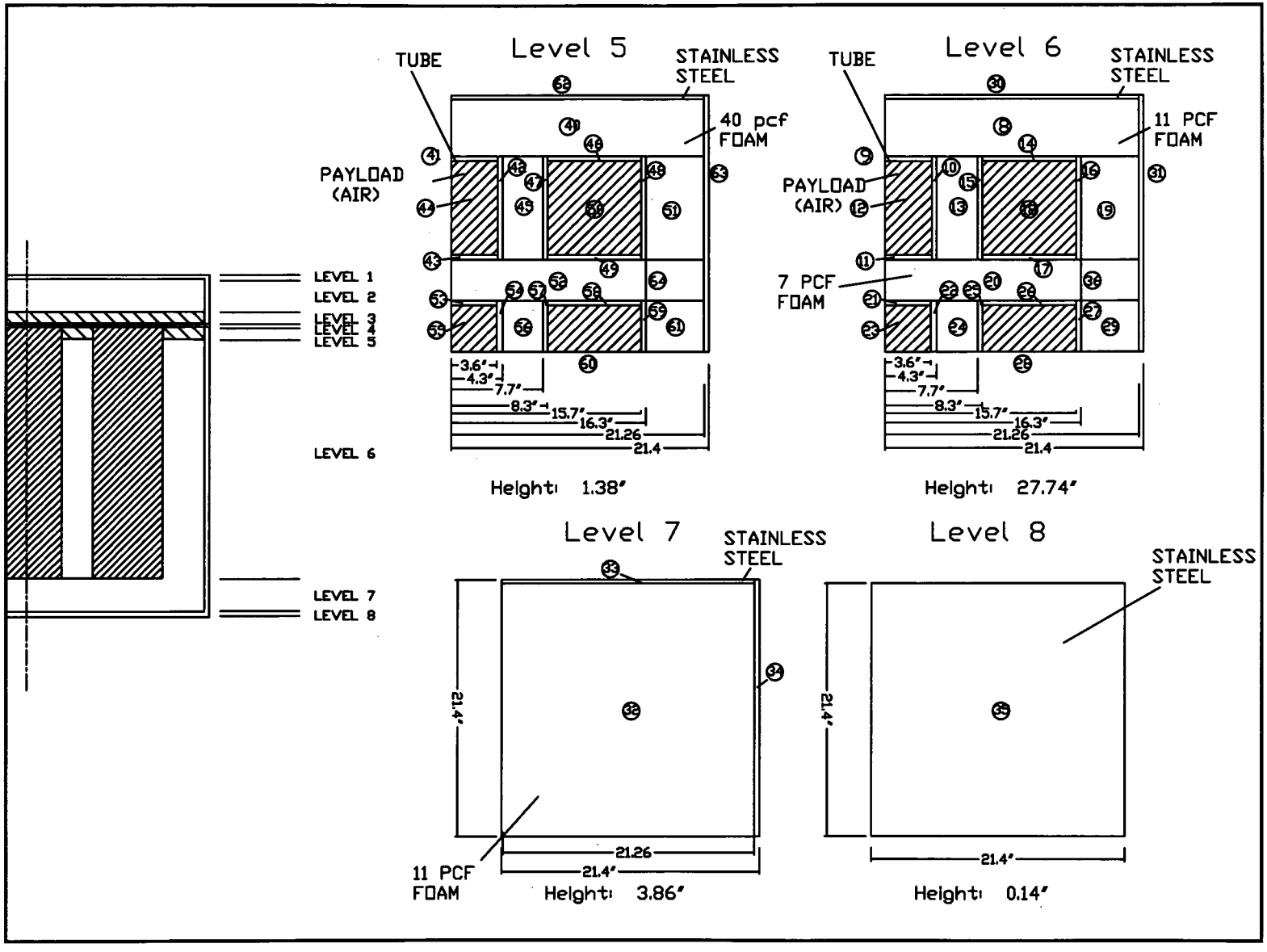

Figure 3.6-1b - Heating 7.3 Thermal Model Schematic Levels 5-8

3.6.1.1 NPC Package Heating 7.3 Input File

```
GNF NPC  No Heat Load, Foam Block With Tubes and skin
* Unfinished SS skin (a=0.5, e=0.5), maximum insolation, 100 F
* Units:  lb, in, hr
100  6 0 0 0
h in lb Btu F
REGIONS
1  4  0.0  21.4 0.0 21.4 0.0 0.14
1  0   0    1    0    1   2   0
2  7  0.0  21.26 0.0 21.26 0.14 6.12
1  0   0    0    0    0   0   0
3  4  21.26 21.4 0.0 21.26 0.14 6.12
1  0   0      1    0    0    0    0
4  4   0.0  21.4 21.26 21.4 0.14 6.12
1  0   0      1    0    1    0    0
5  2  0.0  21.26 0.0 21.26 7.50 7.63
1  0   0    0    0    0   4   4
6  2  21.26 21.4 0.0 21.26 7.50 7.63
1  0   0      1    0    0    4    4
7  2   0.0  21.4 21.26 21.4 7.50 7.63
1  0   0      1    0    1    4    4
8  1   0.0  21.26  16.3 21.26 9.01 36.75
1  0   0      0     0   0      0     0
9  3   0.0  3.6    15.7 16.30 9.01 36.75
1  0   0      0    0    0      0    0
10 3   3.6  4.3    7.7  16.30 9.01 36.75
1  0   0       0    0    0      0    0
11 3   0.0  3.6     7.7  8.30 9.01 36.75
1  0   0     0      0    0      0    0
12 2   0.0  3.6     8.3  15.7 9.01 36.75
1  0    0    0       0    0    0    0
13 5   4.3  7.7     7.7  16.3 9.01  36.75
1  0    0    0       0    0     0    0
14 3   8.3  15.7    15.7  16.3 9.01 36.75
1  0    0    0       0    0     0    0
15 3   7.7   8.3    7.7   16.3 9.01 36.75
1  0    0    0       0    0     0    0
16 3   15.7  16.3   7.7   16.3 9.01 36.75
1  0    0    0       0     0    0    0
17 3    8.3  15.7   7.7    8.3  9.01 36.75
1  0    0    0       0     0    0    0
18 2   8.3   15.7   8.3   15.7  9.01 36.75
1  0    0    0       0     0    0    0
19 1   16.3  21.26  7.7   16.3  9.01 36.75
1  0    0    0       0     0    0    0
20 5    0.0  16.3   4.3    7.7  9.01 36.75
1  0    0    0       0     0    0    0
21 3    0.0  3.6    3.6    4.3  9.01 36.75
1  0    0    0       0     0    0    0
22 3    3.6  4.3    0.0    4.3  9.01 36.75
1  0    0    0       0     0    0    0
23 2    0.0  3.6    0.0    3.6  9.01 36.75
1  0    0    0       0     0    0    0
24 5    4.3  7.7    0.0    4.3  9.01 36.75
1  0    0    0       0     0    0    0
25 3    7.7  8.3    0.0  4.3    9.01 36.75
1  0    0    0       0     0    0    0
26 3    8.3  15.7   3.6  4.3    9.01 36.75
1  0    0    0       0     0    0    0
27 3    15.7 16.3   0.0  4.3    9.01 36.75
1  0    0    0       0     0    0    0
28 2    8.3  15.7   0.0  3.6    9.01 36.75
1  0    0    0       0     0    0    0
29 1    16.3 21.26  0.0  4.3    9.01 36.75
1  0    0    0       0     0    0    0
30 4    0.0  21.26  21.26 21.40 9.01 36.75
1  0    0    0       0     1    0    0
31 4    21.26 21.40  0.0  21.40 9.01 36.75
1  0    0    1       0     1    0    0
32 1    0.0   21.26  0.0  21.26 36.75 40.61
1  0    0    0       0     0    0    0
```

```
33 4    0.0   21.26 21.26 21.40 36.75 40.61
1  0    0    0       0     1    0    0
34 4    21.26 21.40 0.0   21.40 36.75 40.61
1  0    0    1        0     1    0    0
35 4    0.0   21.4   0.0   21.40  40.61 40.75
1  0    0    1       0     1       0    3
36 1    16.3  21.26  4.3    7.7  9.01 36.75
1  0    0    0       0     0    0    0
37  6  0.0  21.26 0.0 21.26 6.12 7.50
1  0   0    0    0    0   0   0
38  4  21.26 21.4 0.0 21.26 6.12 7.50
1  0   0      1    0    0    0    0
39  4   0.0  21.4 21.26 21.4 6.12 7.50
1  0   0      1    0    1    0    0
40  6   0.0  21.26  16.3 21.26 7.63 9.01
1  0   0      0     0   0      0     0
41  3   0.0  3.6    15.7 16.30 7.63 9.01
1  0   0       0    0    0      0    0
42 3   3.6  4.3    7.7  16.30 7.63 9.01
1  0   0       0    0    0      0    0
43 3   0.0  3.6     7.7  8.30 7.63 9.01
1  0   0     0      0    0      0    0
44 2   0.0  3.6     8.3  15.7 7.63 9.01
1  0    0    0       0    0    0    0
45 6   4.3  7.7     7.7  16.3 7.63 9.01
1  0    0    0       0    0     0    0
46 3   8.3  15.7    15.7  16.3 7.63 9.01
1  0    0    0       0    0     0    0
47 3   7.7   8.3    7.7   16.3 7.63 9.01
1  0    0    0       0    0     0    0
48 3   15.7  16.3   7.7   16.3 7.63 9.01
1  0    0    0       0     0    0    0
49 3    8.3  15.7   7.7    8.3  7.63 9.01
1  0    0    0       0     0    0    0
50 2   8.3   15.7   8.3   15.7  7.63 9.01
1  0    0    0       0     0    0    0
51 6   16.3  21.26  7.7   16.3  7.63 9.01
1  0    0    0       0     0    0    0
52 6    0.0  16.3   4.3    7.7  7.63 9.01
1  0    0    0       0     0    0    0
53 3    0.0  3.6    3.6    4.3  7.63 9.01
1  0    0    0       0     0    0    0
54 3    3.6  4.3    0.0    4.3  7.63 9.01
1  0    0    0       0     0    0    0
55 2    0.0  3.6    0.0    3.6  7.63 9.01
1  0    0    0       0     0    0    0
56 6    4.3  7.7    0.0    4.3  7.63 9.01
1  0    0    0       0     0    0    0
57 3    7.7  8.3    0.0  4.3    7.63 9.01
1  0    0    0       0     0    0    0
58 3    8.3  15.7   3.6  4.3    7.63 9.01
1  0    0    0       0     0    0    0
59 3    15.7 16.3   0.0  4.3    7.63 9.01
1  0    0    0       0     0    0    0
60 2    8.3  15.7   0.0  3.6    7.63 9.01
1  0    0    0       0     0    0    0
61 6    16.3 21.26  0.0  4.3    7.63 9.01
1  0    0    0       0     0    0    0
62 4    0.0  21.26  21.26 21.40 7.63 9.01
1  0    0    0       0     1    0    0
63 4    21.26 21.40  0.0  21.40 7.63 9.01
1  0    0    1       0     1    0    0
64 6    16.3  21.26  4.3    7.7  7.63 9.01
1  0    0    0       0     0    0    0
MATERIALS
1  Foam11  0.002  0.0064   0.473
2  Air     0.0013 0.0064   0.24
3  Tubes   0.069  0.053    0.37
4  Steel   0.725   0.281   0.111
5  Foam07  0.0018 0.0041   0.473
6  Foam40  0.0040 0.0231   0.473
7  Foam15  0.0023 0.0087   0.347
INITIAL TEMPERATURE
1  100.0
```

```
HEAT GENERATIONS
1  0.00
BOUNDARY CONDITIONS
1  1  100.0
0.0   5.95e-12 0.0013  0.333   0.213
2  1  100.0
0.0   5.95e-12 0.0015  0.333   0.853
3  1  100.0
0.0   5.95e-14
4  3
0.0   3.97e-12
XGRID
0.0  3.6  4.3  7.7  8.3  15.7  16.3  21.26  21.4
    2    1    2    1    2     1     2     1
YGRID
0.0  3.6  4.3  7.7  8.3  15.7  16.3  21.26  21.4
    2    1    2    1    2     1     2     1
ZGRID
0.0  0.14  6.12 7.5  7.63 9.01 36.75 40.61 40.75
    1    4     2    1     1   7     3     1
STEADY-STATE
1
%
```

3.6.1.2 GNF NPC Heating 7.3 Temperature Maps

GNF NPC No Heat Load, Foam Block With Tubes and skin 18 Jan 2000 11:08:42

Steady-State Temperature Distribution at Time 0.0000E+00

Z = 0.0000E+00

13	21.40	152.69	152.68	152.68	152.67	152.64	152.60	152.57	152.29	151.37	151.03	148.94	144.55	144.50
12	21.26	152.79	152.79	152.78	152.78	152.75	152.70	152.68	152.39	151.47	151.13	149.04	144.61	144.55
11	18.78	165.17	165.17	165.16	165.15	165.12	165.05	165.02	164.63	163.26	162.68	158.91	149.04	148.94
10	16.30	170.39	170.38	170.36	170.35	170.31	170.23	170.19	169.72	168.02	167.31	162.68	151.13	151.03
9	15.70	171.20	171.20	171.18	171.17	171.12	171.04	170.99	170.51	168.75	168.02	163.26	151.47	151.37
8	12.00	173.25	173.25	173.22	173.21	173.15	173.06	173.01	172.45	170.51	169.72	164.63	152.39	152.29
7	8.30	173.86	173.85	173.83	173.81	173.75	173.65	173.59	173.01	170.99	170.19	165.02	152.68	152.57
6	7.70	173.92	173.91	173.88	173.87	173.81	173.70	173.65	173.06	171.04	170.23	165.05	152.70	152.60
5	6.00	174.03	174.02	173.99	173.97	173.91	173.81	173.75	173.15	171.12	170.31	165.12	152.75	152.64
4	4.30	174.09	174.08	174.05	174.03	173.97	173.87	173.81	173.21	171.17	170.35	165.15	152.78	152.67
3	3.60	174.11	174.10	174.07	174.05	173.99	173.88	173.83	173.22	171.18	170.36	165.16	152.78	152.68
2	1.80	174.14	174.13	174.10	174.08	174.02	173.91	173.85	173.25	171.20	170.38	165.17	152.79	152.68
1	.00	174.14	174.14	174.11	174.09	174.03	173.92	173.86	173.25	171.20	170.39	165.17	152.79	152.69
		.00	1.80	3.60	4.30	6.00	7.70	8.30	12.00	15.70	16.30	18.78	21.26	21.40
		1	2	3	4	5	6	7	8	9	10	11	12	13

GNF Powdered Fuel ContainerNPC No Heat Load, Foam Block With Tubes and skin 18 Jan 2000 11:08:42

Steady-State Temperature Distribution at Time 0.0000E+00

Z = 1.4000E-01

13	21.40	152.58	152.58	152.57	152.56	152.54	152.49	152.46	152.18	151.26	150.92	148.84	144.44	144.39
12	21.26	152.70	152.70	152.69	152.69	152.66	152.61	152.59	152.30	151.38	151.04	148.95	144.51	144.44
11	18.78	165.16	165.16	165.14	165.13	165.10	165.04	165.00	164.62	163.24	162.66	158.88	148.95	148.84
10	16.30	170.38	170.37	170.36	170.34	170.30	170.22	170.18	169.71	168.01	167.30	162.66	151.04	150.92
9	15.70	171.20	171.19	171.17	171.16	171.11	171.03	170.99	170.50	168.74	168.01	163.24	151.38	151.26
8	12.00	173.25	173.24	173.22	173.20	173.15	173.05	173.00	172.45	170.50	169.71	164.62	152.30	152.18
7	8.30	173.86	173.85	173.82	173.81	173.75	173.65	173.59	173.00	170.99	170.18	165.00	152.59	152.46
6	7.70	173.91	173.91	173.88	173.86	173.80	173.70	173.65	173.05	171.03	170.22	165.04	152.61	152.49
5	6.00	174.02	174.01	173.99	173.97	173.91	173.80	173.75	173.15	171.11	170.30	165.10	152.66	152.54
4	4.30	174.09	174.08	174.05	174.03	173.97	173.86	173.81	173.20	171.16	170.34	165.13	152.69	152.56
3	3.60	174.10	174.10	174.07	174.05	173.99	173.88	173.82	173.22	171.17	170.36	165.14	152.69	152.57
2	1.80	174.13	174.12	174.10	174.08	174.01	173.91	173.85	173.24	171.19	170.37	165.16	152.70	152.58
1	.00	174.14	174.13	174.10	174.09	174.02	173.91	173.86	173.25	171.20	170.38	165.16	152.70	152.58
		.00	1.80	3.60	4.30	6.00	7.70	8.30	12.00	15.70	16.30	18.78	21.26	21.40
		1	2	3	4	5	6	7	8	9	10	11	12	13

GNF Powdered Fuel ContainerNPC No Heat Load, Foam Block With Tubes and skin 18 Jan 2000 11:08:42

Steady-State Temperature Distribution at Time 0.0000E+00

Z = 1.6350E+00

13	21.40	142.99	142.99	142.98	142.98	142.95	142.91	142.89	142.65	141.94	141.72	140.41	138.56	138.54
12	21.26	143.01	143.01	143.00	143.00	142.97	142.93	142.91	142.67	141.96	141.73	140.43	138.58	138.56
11	18.78	155.34	155.33	155.30	155.28	155.22	155.11	155.06	154.52	152.87	152.27	148.55	140.43	140.41
10	16.30	161.55	161.54	161.48	161.45	161.35	161.20	161.12	160.38	158.09	157.28	152.27	141.73	141.72
9	15.70	162.60	162.58	162.52	162.48	162.38	162.21	162.13	161.35	158.95	158.09	152.87	141.96	141.94
8	12.00	165.75	165.70	165.59	165.54	165.39	165.19	165.10	164.22	161.35	160.38	154.52	142.67	142.65
7	8.30	166.76	166.73	166.64	166.60	166.45	166.21	166.11	165.10	162.13	161.12	155.06	142.91	142.89
6	7.70	166.87	166.84	166.76	166.71	166.56	166.32	166.21	165.19	162.21	161.20	155.11	142.93	142.91
5	6.00	167.12	167.09	167.00	166.96	166.80	166.56	166.45	165.39	162.38	161.35	155.22	142.97	142.95
4	4.30	167.30	167.26	167.17	167.12	166.96	166.71	166.60	165.54	162.48	161.45	155.28	143.00	142.98
3	3.60	167.36	167.32	167.23	167.17	167.00	166.76	166.64	165.59	162.52	161.48	155.30	143.00	142.98
2	1.80	167.49	167.45	167.32	167.26	167.09	166.84	166.73	165.70	162.58	161.54	155.33	143.01	142.99
1	.00	167.54	167.49	167.36	167.30	167.12	166.87	166.76	165.75	162.60	161.55	155.34	143.01	142.99
		.00	1.80	3.60	4.30	6.00	7.70	8.30	12.00	15.70	16.30	18.78	21.26	21.40
		1	2	3	4	5	6	7	8	9	10	11	12	13

GNF Powdered Fuel ContainerNPC No Heat Load, Foam Block With Tubes and skin 18 Jan 2000 11:08:42

Steady-State Temperature Distribution at Time 0.0000E+00

Z = 3.1300E+00

13	21.40	137.04	137.04	137.03	137.03	137.01	136.97	136.95	136.76	136.23	136.08	135.29	134.43	134.42
12	21.26	137.05	137.05	137.04	137.04	137.02	136.98	136.97	136.77	136.24	136.09	135.30	134.44	134.43
11	18.78	147.76	147.74	147.70	147.68	147.59	147.45	147.39	146.78	145.13	144.60	141.42	135.30	135.29
10	16.30	153.87	153.84	153.76	153.71	153.57	153.34	153.25	152.37	149.94	149.17	144.60	136.09	136.08
9	15.70	154.94	154.91	154.81	154.76	154.61	154.37	154.26	153.35	150.77	149.94	145.13	136.24	136.23
8	12.00	158.65	158.56	158.32	158.23	158.01	157.72	157.60	156.65	153.35	152.37	146.78	136.77	136.76
7	8.30	159.80	159.74	159.60	159.53	159.31	158.97	158.82	157.60	154.26	153.25	147.39	136.97	136.95
6	7.70	159.94	159.89	159.75	159.68	159.46	159.12	158.97	157.72	154.37	153.34	147.45	136.98	136.97
5	6.00	160.30	160.26	160.12	160.05	159.82	159.46	159.31	158.01	154.61	153.57	147.59	137.02	137.01
4	4.30	160.58	160.53	160.37	160.29	160.05	159.68	159.53	158.23	154.76	153.71	147.68	137.04	137.03
3	3.60	160.70	160.63	160.46	160.37	160.12	159.75	159.60	158.32	154.81	153.76	147.70	137.04	137.03
2	1.80	160.97	160.87	160.63	160.53	160.26	159.89	159.74	158.56	154.91	153.84	147.74	137.05	137.04
1	.00	161.08	160.97	160.70	160.58	160.30	159.94	159.80	158.65	154.94	153.87	147.76	137.05	137.04
		.00	1.80	3.60	4.30	6.00	7.70	8.30	12.00	15.70	16.30	18.78	21.26	21.40
		1	2	3	4	5	6	7	8	9	10	11	12	13

GNF Powdered Fuel ContainerNPC No Heat Load, Foam Block With Tubes and skin 18 Jan 2000 11:08:42

Steady-State Temperature Distribution at Time 0.0000E+00

Z = 4.6250E+00

13	21.40	133.40	133.40	133.39	133.39	133.37	133.34	133.32	133.16	132.76	132.67	132.17	131.74	131.73
12	21.26	133.41	133.41	133.40	133.40	133.38	133.35	133.33	133.17	132.77	132.67	132.18	131.75	131.74
11	18.78	141.86	141.85	141.80	141.77	141.67	141.50	141.43	140.81	139.35	138.92	136.43	132.18	132.17
10	16.30	147.18	147.15	147.05	147.00	146.83	146.53	146.41	145.51	143.29	142.64	138.92	132.67	132.67
9	15.70	148.17	148.12	147.99	147.93	147.76	147.43	147.30	146.38	143.98	143.29	139.35	132.77	132.76
8	12.00	152.11	151.91	151.42	151.27	151.01	150.63	150.51	149.84	146.38	145.51	140.81	133.17	133.16
7	8.30	152.98	152.90	152.68	152.60	152.37	151.89	151.72	150.51	147.30	146.41	141.43	133.33	133.32
6	7.70	153.14	153.06	152.87	152.79	152.56	152.08	151.89	150.63	147.43	146.53	141.50	133.35	133.34
5	6.00	153.62	153.55	153.39	153.30	153.04	152.56	152.37	151.01	147.76	146.83	141.67	133.38	133.37
4	4.30	153.96	153.88	153.68	153.58	153.30	152.79	152.60	151.27	147.93	147.00	141.77	133.40	133.39
3	3.60	154.14	154.04	153.78	153.68	153.39	152.87	152.68	151.42	147.99	147.05	141.80	133.40	133.39
2	1.80	154.69	154.50	154.04	153.88	153.55	153.06	152.90	151.91	148.12	147.15	141.85	133.41	133.40
1	.00	154.90	154.69	154.14	153.96	153.62	153.14	152.98	152.11	148.17	147.18	141.86	133.41	133.40
		.00	1.80	3.60	4.30	6.00	7.70	8.30	12.00	15.70	16.30	18.78	21.26	21.40
		1	2	3	4	5	6	7	8	9	10	11	12	13

GNF Powdered Fuel ContainerNPC No Heat Load, Foam Block With Tubes and skin 18 Jan 2000 11:08:42

Steady-State Temperature Distribution at Time 0.0000E+00

Z = 6.1200E+00

13	21.40	131.28	131.28	131.28	131.27	131.26	131.23	131.21	131.07	130.76	130.69	130.36	130.15	130.14
12	21.26	131.29	131.29	131.28	131.28	131.26	131.23	131.22	131.08	130.77	130.70	130.37	130.15	130.15
11	18.78	137.13	137.12	137.07	137.04	136.93	136.73	136.65	136.06	134.88	134.55	132.73	130.37	130.36
10	16.30	141.28	141.25	141.16	141.12	140.99	140.53	140.38	139.52	137.77	137.31	134.55	130.70	130.69
9	15.70	142.06	142.01	141.86	141.82	141.71	141.18	141.02	140.19	138.26	137.77	134.88	130.77	130.76
8	12.00	146.33	145.92	144.75	144.53	144.41	143.83	143.72	143.95	140.19	139.52	136.06	131.08	131.07
7	8.30	146.26	146.12	145.79	145.73	145.67	144.90	144.67	143.72	141.02	140.38	136.65	131.22	131.21
6	7.70	146.41	146.30	146.03	145.98	145.91	145.13	144.90	143.83	141.18	140.53	136.73	131.23	131.23
5	6.00	147.12	147.05	146.87	146.81	146.59	145.91	145.67	144.41	141.71	140.99	136.93	131.26	131.26
4	4.30	147.36	147.27	147.05	146.98	146.81	145.98	145.73	144.53	141.82	141.12	137.04	131.28	131.27
3	3.60	147.62	147.48	147.13	147.05	146.87	146.03	145.79	144.75	141.86	141.16	137.07	131.28	131.28
2	1.80	148.89	148.53	147.48	147.27	147.05	146.30	146.12	145.92	142.01	141.25	137.12	131.29	131.28
1	.00	149.33	148.89	147.62	147.36	147.12	146.41	146.26	146.33	142.06	141.28	137.13	131.29	131.28
		.00	1.80	3.60	4.30	6.00	7.70	8.30	12.00	15.70	16.30	18.78	21.26	21.40
		1	2	3	4	5	6	7	8	9	10	11	12	13

GNF Powdered Fuel ContainerNPC No Heat Load, Foam Block With Tubes and skin 18 Jan 2000 11:08:42

Steady-State Temperature Distribution at Time 0.0000E+00

Z = 6.8100E+00

13	21.40	130.68	130.68	130.67	130.67	130.65	130.62	130.61	130.48	130.19	130.13	129.84	129.71	129.70
12	21.26	130.68	130.68	130.68	130.67	130.66	130.63	130.62	130.48	130.20	130.13	129.85	129.71	129.71
11	18.78	136.03	136.02	135.97	135.94	135.83	135.62	135.54	134.95	133.85	133.55	131.84	129.85	129.84
10	16.30	139.85	139.83	139.76	139.75	139.65	139.08	138.92	138.06	136.50	136.12	133.55	130.13	130.13
9	15.70	140.50	140.45	140.32	140.30	140.31	139.60	139.43	138.61	136.89	136.50	133.85	130.20	130.19
8	12.00	145.10	144.60	142.91	142.70	142.79	142.02	141.93	142.70	138.61	138.06	134.95	130.48	130.48
7	8.30	144.45	144.30	143.89	143.86	144.01	142.97	142.75	141.93	139.43	138.92	135.54	130.62	130.61
6	7.70	144.58	144.45	144.15	144.14	144.27	143.23	142.97	142.02	139.60	139.08	135.62	130.63	130.62
5	6.00	145.51	145.44	145.27	145.22	145.06	144.27	144.01	142.79	140.31	139.65	135.83	130.66	130.65
4	4.30	145.54	145.45	145.26	145.24	145.22	144.14	143.86	142.70	140.30	139.75	135.94	130.67	130.67
3	3.60	145.79	145.66	145.31	145.26	145.27	144.15	143.89	142.91	140.32	139.76	135.97	130.68	130.67
2	1.80	147.61	147.17	145.66	145.45	145.44	144.45	144.30	144.60	140.45	139.83	136.02	130.68	130.68
1	.00	148.14	147.61	145.79	145.54	145.51	144.58	144.45	145.10	140.50	139.85	136.03	130.68	130.68
		.00	1.80	3.60	4.30	6.00	7.70	8.30	12.00	15.70	16.30	18.78	21.26	21.40
		1	2	3	4	5	6	7	8	9	10	11	12	13

GNF Powdered Fuel ContainerNPC No Heat Load, Foam Block With Tubes and skin 18 Jan 2000 11:08:42

Steady-State Temperature Distribution at Time 0.0000E+00

Z = 7.5000E+00

13	21.40	130.27	130.27	130.26	130.26	130.24	130.21	130.20	130.08	129.81	129.75	129.48	129.44	129.44
12	21.26	130.26	130.26	130.26	130.25	130.24	130.21	130.20	130.07	129.80	129.74	129.48	129.44	129.44
11	18.78	135.04	135.04	135.00	134.97	134.85	134.63	134.55	133.97	132.95	132.67	130.99	129.48	129.48
10	16.30	138.57	138.57	138.55	138.57	138.53	137.76	137.62	136.73	135.41	135.20	132.67	129.74	129.75
9	15.70	138.91	138.90	138.82	138.84	139.11	138.00	137.87	137.02	135.59	135.41	132.95	129.80	129.81
8	12.00	144.21	143.62	140.89	140.76	141.37	140.13	140.11	141.79	137.02	136.73	133.97	130.07	130.08
7	8.30	142.60	142.45	141.89	141.89	142.53	140.91	140.76	140.11	137.87	137.62	134.55	130.20	130.20
6	7.70	142.65	142.51	142.10	142.19	142.80	141.19	140.91	140.13	138.00	137.76	134.63	130.21	130.21
5	6.00	144.07	144.00	143.84	143.81	143.73	142.80	142.53	141.37	139.11	138.53	134.85	130.24	130.24
4	4.30	143.60	143.54	143.42	143.50	143.81	142.19	141.89	140.76	138.84	138.57	134.97	130.25	130.26
3	3.60	143.75	143.66	143.40	143.42	143.84	142.10	141.89	140.89	138.82	138.55	135.00	130.26	130.26
2	1.80	146.64	146.13	143.66	143.54	144.00	142.51	142.45	143.62	138.90	138.57	135.04	130.26	130.27
1	.00	147.27	146.64	143.75	143.60	144.07	142.65	142.60	144.21	138.91	138.57	135.04	130.26	130.27
		.00	1.80	3.60	4.30	6.00	7.70	8.30	12.00	15.70	16.30	18.78	21.26	21.40
		1	2	3	4	5	6	7	8	9	10	11	12	13

GNF Powdered Fuel ContainerNPC No Heat Load, Foam Block With Tubes and skin 18 Jan 2000 11:08:42

Steady-State Temperature Distribution at Time 0.0000E+00

Z = 7.6300E+00

13	21.40	127.62	127.62	127.62	127.61	127.60	127.58	127.58	127.50	127.34	127.31	127.13	126.83	126.83
12	21.26	127.63	127.63	127.63	127.62	127.61	127.59	127.58	127.51	127.35	127.32	127.14	126.84	126.83
11	18.78	134.64	134.63	134.60	134.57	134.44	134.22	134.14	133.57	132.58	132.30	130.62	127.14	127.13
10	16.30	138.08	138.09	138.09	138.13	138.12	137.24	137.11	136.20	134.99	134.89	132.30	127.32	127.31
9	15.70	138.18	138.19	138.15	138.19	138.66	137.25	137.19	136.29	135.02	134.99	132.58	127.35	127.34
8	12.00	143.91	143.31	139.91	139.89	140.83	139.27	139.31	141.49	136.29	136.20	133.57	127.51	127.50
7	8.30	141.79	141.64	141.00	141.00	141.97	139.94	139.90	139.31	137.19	137.11	134.14	127.58	127.58
6	7.70	141.75	141.60	141.12	141.29	142.24	140.21	139.94	139.27	137.25	137.24	134.22	127.59	127.58
5	6.00	143.53	143.46	143.30	143.28	143.22	142.24	141.97	140.83	138.66	138.12	134.44	127.61	127.60
4	4.30	142.73	142.68	142.59	142.73	143.28	141.29	141.00	139.89	138.19	138.13	134.57	127.62	127.61
3	3.60	142.76	142.71	142.54	142.59	143.30	141.12	141.00	139.91	138.15	138.09	134.60	127.63	127.62
2	1.80	146.34	145.81	142.71	142.68	143.46	141.60	141.64	143.31	138.19	138.09	134.63	127.63	127.62
1	.00	146.98	146.34	142.76	142.73	143.53	141.75	141.79	143.91	138.18	138.08	134.64	127.63	127.62
		.00	1.80	3.60	4.30	6.00	7.70	8.30	12.00	15.70	16.30	18.78	21.26	21.40
		1	2	3	4	5	6	7	8	9	10	11	12	13

GNF Powdered Fuel ContainerNPC No Heat Load, Foam Block With Tubes and skin 18 Jan 2000 11:08:42

Steady-State Temperature Distribution at Time 0.0000E+00

Z = 9.0100E+00

13	21.40	127.09	127.09	127.09	127.08	127.07	127.06	127.05	126.98	126.86	126.83	126.68	126.53	126.53
12	21.26	127.09	127.09	127.09	127.09	127.08	127.06	127.05	126.99	126.86	126.83	126.69	126.53	126.53
11	18.78	133.35	133.35	133.33	133.29	133.12	132.92	132.85	132.29	131.42	131.16	129.48	126.69	126.68
10	16.30	137.30	137.34	137.50	137.47	136.84	136.44	136.42	135.41	134.45	134.33	131.16	126.83	126.83
9	15.70	137.32	137.37	137.56	137.58	137.37	136.52	136.47	135.43	134.47	134.45	131.42	126.86	126.86
8	12.00	140.73	140.33	139.05	139.05	139.26	138.23	138.23	138.46	135.43	135.41	132.29	126.99	126.98
7	8.30	140.66	140.54	140.15	140.14	140.33	138.93	138.92	138.23	136.47	136.42	132.85	127.05	127.05
6	7.70	140.67	140.55	140.20	140.22	140.57	139.02	138.93	138.23	136.52	136.44	132.92	127.06	127.06
5	6.00	141.93	141.87	141.72	141.68	141.50	140.57	140.33	139.26	137.37	136.84	133.12	127.08	127.07
4	4.30	141.88	141.86	141.81	141.81	141.68	140.22	140.14	139.05	137.58	137.47	133.29	127.09	127.08
3	3.60	141.89	141.86	141.80	141.81	141.72	140.20	140.15	139.05	137.56	137.50	133.33	127.09	127.09
2	1.80	143.24	142.92	141.86	141.86	141.87	140.55	140.54	140.33	137.37	137.34	133.35	127.09	127.09
1	.00	143.66	143.24	141.89	141.88	141.93	140.67	140.66	140.73	137.32	137.30	133.35	127.09	127.09
		.00	1.80	3.60	4.30	6.00	7.70	8.30	12.00	15.70	16.30	18.78	21.26	21.40
		1	2	3	4	5	6	7	8	9	10	11	12	13

GNF Powdered Fuel ContainerNPC No Heat Load, Foam Block With Tubes and skin 18 Jan 2000 11:08:42

Steady-State Temperature Distribution at Time 0.0000E+00

Z = 1.2973E+01

13	21.40	126.34	126.34	126.34	126.34	126.33	126.31	126.31	126.27	126.19	126.18	126.10	126.04	126.04
12	21.26	126.34	126.34	126.34	126.34	126.33	126.31	126.31	126.27	126.19	126.18	126.10	126.04	126.04
11	18.78	131.00	131.00	130.96	130.91	130.65	130.51	130.46	130.00	129.38	129.16	127.74	126.10	126.10
10	16.30	135.19	135.25	135.43	135.39	134.21	134.22	134.23	133.34	132.68	132.58	129.16	126.18	126.18
9	15.70	135.20	135.27	135.49	135.50	134.69	134.30	134.27	133.35	132.70	132.68	129.38	126.19	126.19
8	12.00	136.88	136.80	136.60	136.60	136.10	135.53	135.53	134.79	133.35	133.34	130.00	126.27	126.27
7	8.30	137.79	137.71	137.46	137.44	136.91	136.11	136.10	135.53	134.27	134.23	130.46	126.31	126.31
6	7.70	137.79	137.71	137.49	137.47	137.07	136.14	136.11	135.53	134.30	134.22	130.51	126.31	126.31
5	6.00	138.59	138.54	138.38	138.26	137.74	137.07	136.91	136.10	134.69	134.21	130.65	126.33	126.33
4	4.30	139.30	139.28	139.24	139.21	138.26	137.47	137.44	136.60	135.50	135.39	130.91	126.34	126.34
3	3.60	139.30	139.28	139.25	139.24	138.38	137.49	137.46	136.60	135.49	135.43	130.96	126.34	126.34
2	1.80	139.53	139.46	139.28	139.28	138.54	137.71	137.71	136.80	135.27	135.25	131.00	126.34	126.34
1	.00	139.61	139.53	139.30	139.30	138.59	137.79	137.79	136.88	135.20	135.19	131.00	126.34	126.34
		.00	1.80	3.60	4.30	6.00	7.70	8.30	12.00	15.70	16.30	18.78	21.26	21.40
		1	2	3	4	5	6	7	8	9	10	11	12	13

GNF Powdered Fuel ContainerNPC No Heat Load, Foam Block With Tubes and skin 18 Jan 2000 11:08:42

Steady-State Temperature Distribution at Time 0.0000E+00

Z = 1.6936E+01

13	21.40	126.08	126.08	126.07	126.07	126.06	126.05	126.04	126.01	125.96	125.95	125.89	125.86	125.86
12	21.26	126.08	126.08	126.07	126.07	126.06	126.05	126.04	126.01	125.96	125.95	125.89	125.86	125.86
11	18.78	129.82	129.81	129.78	129.72	129.47	129.34	129.29	128.91	128.42	128.25	127.10	125.89	125.89
10	16.30	133.42	133.47	133.63	133.58	132.48	132.45	132.46	131.72	131.21	131.12	128.25	125.95	125.95
9	15.70	133.43	133.49	133.67	133.68	132.88	132.52	132.49	131.73	131.23	131.21	128.42	125.96	125.96
8	12.00	134.64	134.62	134.56	134.56	134.02	133.48	133.48	132.74	131.73	131.72	128.91	126.01	126.01
7	8.30	135.52	135.46	135.26	135.24	134.68	133.95	133.95	133.48	132.49	132.46	129.29	126.04	126.04
6	7.70	135.53	135.47	135.28	135.27	134.82	133.98	133.95	133.48	132.52	132.45	129.34	126.05	126.05
5	6.00	136.28	136.24	136.08	135.97	135.42	134.82	134.68	134.02	132.88	132.48	129.47	126.06	126.06
4	4.30	137.04	137.02	136.99	136.96	135.97	135.27	135.24	134.56	133.68	133.58	129.72	126.07	126.07
3	3.60	137.04	137.03	137.00	136.99	136.08	135.28	135.26	134.56	133.67	133.63	129.78	126.07	126.07
2	1.80	137.12	137.10	137.03	137.02	136.24	135.47	135.46	134.62	133.49	133.47	129.81	126.08	126.08
1	.00	137.15	137.12	137.04	137.04	136.28	135.53	135.52	134.64	133.43	133.42	129.82	126.08	126.08
		.00	1.80	3.60	4.30	6.00	7.70	8.30	12.00	15.70	16.30	18.78	21.26	21.40
		1	2	3	4	5	6	7	8	9	10	11	12	13

GNF Powdered Fuel ContainerNPC No Heat Load, Foam Block With Tubes and skin 18 Jan 2000 11:08:42

Steady-State Temperature Distribution at Time 0.0000E+00

Z = 2.0899E+01

13	21.40	125.96	125.95	125.95	125.95	125.94	125.92	125.92	125.89	125.85	125.85	125.81	125.78	125.78
12	21.26	125.96	125.95	125.95	125.95	125.94	125.93	125.92	125.89	125.85	125.85	125.81	125.78	125.78
11	18.78	129.00	129.00	128.96	128.91	128.69	128.56	128.52	128.20	127.81	127.67	126.75	125.81	125.81
10	16.30	131.98	132.03	132.15	132.11	131.15	131.08	131.08	130.47	130.06	129.99	127.67	125.85	125.85
9	15.70	131.99	132.04	132.19	132.19	131.48	131.13	131.11	130.48	130.08	130.06	127.81	125.85	125.85
8	12.00	132.96	132.95	132.92	132.91	132.41	131.91	131.91	131.27	130.48	130.47	128.20	125.89	125.89
7	8.30	133.72	133.67	133.50	133.48	132.97	132.30	132.29	131.91	131.11	131.08	128.52	125.92	125.92
6	7.70	133.73	133.67	133.52	133.50	133.09	132.33	132.30	131.91	131.13	131.08	128.56	125.93	125.92
5	6.00	134.43	134.39	134.25	134.14	133.63	133.09	132.97	132.41	131.48	131.15	128.69	125.94	125.94
4	4.30	135.14	135.12	135.09	135.06	134.14	133.50	133.48	132.91	132.19	132.11	128.91	125.95	125.95
3	3.60	135.14	135.13	135.10	135.09	134.25	133.52	133.50	132.92	132.19	132.15	128.96	125.95	125.95
2	1.80	135.20	135.18	135.13	135.12	134.39	133.67	133.67	132.95	132.04	132.03	129.00	125.95	125.95
1	.00	135.21	135.20	135.14	135.14	134.43	133.73	133.72	132.96	131.99	131.98	129.00	125.96	125.96
		.00	1.80	3.60	4.30	6.00	7.70	8.30	12.00	15.70	16.30	18.78	21.26	21.40
		1	2	3	4	5	6	7	8	9	10	11	12	13

GNF Powdered Fuel ContainerNPC No Heat Load, Foam Block With Tubes and skin 18 Jan 2000 11:08:42

Steady-State Temperature Distribution at Time 0.0000E+00

Z = 2.4861E+01

13	21.40	125.87	125.87	125.87	125.86	125.85	125.84	125.84	125.82	125.79	125.78	125.75	125.74	125.74
12	21.26	125.87	125.87	125.87	125.86	125.85	125.85	125.84	125.82	125.79	125.78	125.75	125.74	125.74
11	18.78	128.37	128.37	128.34	128.29	128.10	127.98	127.94	127.68	127.36	127.25	126.51	125.75	125.75
10	16.30	130.83	130.87	130.97	130.94	130.11	130.02	130.02	129.52	129.18	129.12	127.25	125.78	125.78
9	15.70	130.84	130.88	131.00	131.00	130.39	130.06	130.05	129.52	129.19	129.18	127.36	125.79	125.79
8	12.00	131.64	131.64	131.61	131.60	131.15	130.71	130.70	130.17	129.52	129.52	127.68	125.82	125.82
7	8.30	132.29	132.25	132.10	132.09	131.62	131.03	131.03	130.70	130.05	130.02	127.94	125.84	125.84
6	7.70	132.29	132.25	132.12	132.10	131.73	131.05	131.03	130.71	130.06	130.02	127.98	125.85	125.84
5	6.00	132.93	132.89	132.77	132.67	132.22	131.73	131.62	131.15	130.39	130.11	128.10	125.85	125.85
4	4.30	133.57	133.56	133.53	133.50	132.67	132.10	132.09	131.60	131.00	130.94	128.29	125.86	125.86
3	3.60	133.57	133.56	133.54	133.53	132.77	132.12	132.10	131.61	131.00	130.97	128.34	125.87	125.87
2	1.80	133.62	133.61	133.56	133.56	132.89	132.25	132.25	131.64	130.88	130.87	128.37	125.87	125.87
1	.00	133.64	133.62	133.57	133.57	132.93	132.29	132.29	131.64	130.84	130.83	128.37	125.87	125.87
		.00	1.80	3.60	4.30	6.00	7.70	8.30	12.00	15.70	16.30	18.78	21.26	21.40
		1	2	3	4	5	6	7	8	9	10	11	12	13

GNF Powdered Fuel ContainerNPC No Heat Load, Foam Block With Tubes and skin 18 Jan 2000 11:08:42

Steady-State Temperature Distribution at Time 0.0000E+00

Z = 2.8824E+01

13	21.40	125.81	125.81	125.81	125.81	125.80	125.79	125.79	125.77	125.75	125.75	125.72	125.71	125.71
12	21.26	125.81	125.81	125.81	125.81	125.80	125.79	125.79	125.77	125.75	125.75	125.72	125.71	125.71
11	18.78	127.88	127.88	127.85	127.81	127.64	127.54	127.51	127.28	127.02	126.93	126.33	125.72	125.72
10	16.30	129.92	129.95	130.04	130.01	129.31	129.21	129.21	128.78	128.50	128.45	126.93	125.75	125.75
9	15.70	129.93	129.96	130.06	130.07	129.53	129.24	129.23	128.78	128.51	128.50	127.02	125.75	125.75
8	12.00	130.60	130.60	130.58	130.58	130.17	129.78	129.78	129.32	128.78	128.78	127.28	125.77	125.77
7	8.30	131.17	131.13	131.00	130.99	130.58	130.06	130.06	129.78	129.23	129.21	127.51	125.79	125.79
6	7.70	131.17	131.13	131.02	131.01	130.68	130.08	130.06	129.78	129.24	129.21	127.54	125.79	125.79
5	6.00	131.73	131.70	131.59	131.51	131.10	130.68	130.58	130.17	129.53	129.31	127.64	125.80	125.80
4	4.30	132.31	132.30	132.27	132.25	131.51	131.01	130.99	130.58	130.07	130.01	127.81	125.81	125.81
3	3.60	132.31	132.30	132.28	132.27	131.59	131.02	131.00	130.58	130.06	130.04	127.85	125.81	125.81
2	1.80	132.34	132.33	132.30	132.30	131.70	131.13	131.13	130.60	129.96	129.95	127.88	125.81	125.81
1	.00	132.35	132.34	132.31	132.31	131.73	131.17	131.17	130.60	129.93	129.92	127.88	125.81	125.81
		.00	1.80	3.60	4.30	6.00	7.70	8.30	12.00	15.70	16.30	18.78	21.26	21.40
		1	2	3	4	5	6	7	8	9	10	11	12	13

GNF Powdered Fuel ContainerNPC No Heat Load, Foam Block With Tubes and skin 18 Jan 2000 11:08:42

Steady-State Temperature Distribution at Time 0.0000E+00

Z = 3.2787E+01

13	21.40	125.79	125.79	125.78	125.78	125.78	125.77	125.77	125.75	125.73	125.73	125.71	125.70	125.70
12	21.26	125.79	125.79	125.78	125.78	125.78	125.77	125.77	125.75	125.73	125.73	125.71	125.70	125.70
11	18.78	127.48	127.48	127.45	127.42	127.28	127.19	127.16	126.97	126.75	126.68	126.19	125.71	125.71
10	16.30	129.20	129.23	129.31	129.29	128.67	128.58	128.58	128.21	127.97	127.93	126.68	125.73	125.73
9	15.70	129.21	129.24	129.33	129.33	128.86	128.61	128.60	128.21	127.98	127.97	126.75	125.73	125.73
8	12.00	129.72	129.74	129.79	129.78	129.41	129.08	129.08	128.62	128.21	128.21	126.97	125.75	125.75
7	8.30	130.31	130.27	130.16	130.15	129.77	129.33	129.33	129.08	128.60	128.58	127.16	125.77	125.77
6	7.70	130.31	130.28	130.18	130.17	129.85	129.35	129.33	129.08	128.61	128.58	127.19	125.77	125.77
5	6.00	130.79	130.76	130.66	130.58	130.21	129.85	129.77	129.41	128.86	128.67	127.28	125.78	125.78
4	4.30	131.32	131.31	131.29	131.27	130.58	130.17	130.15	129.78	129.33	129.29	127.42	125.78	125.78
3	3.60	131.32	131.31	131.29	131.29	130.66	130.18	130.16	129.79	129.33	129.31	127.45	125.78	125.78
2	1.80	131.27	131.28	131.31	131.31	130.76	130.28	130.27	129.74	129.24	129.23	127.48	125.79	125.79
1	.00	131.24	131.27	131.32	131.32	130.79	130.31	130.31	129.72	129.21	129.20	127.48	125.79	125.79
		.00	1.80	3.60	4.30	6.00	7.70	8.30	12.00	15.70	16.30	18.78	21.26	21.40
		1	2	3	4	5	6	7	8	9	10	11	12	13

GNF Powdered Fuel ContainerNPC No Heat Load, Foam Block With Tubes and skin 18 Jan 2000 11:08:42

Steady-State Temperature Distribution at Time 0.0000E+00

Z = 3.6750E+01

13	21.40	125.79	125.79	125.79	125.78	125.78	125.77	125.77	125.75	125.72	125.72	125.70	125.69	125.69
12	21.26	125.79	125.79	125.79	125.78	125.78	125.77	125.77	125.75	125.72	125.72	125.70	125.70	125.69
11	18.78	127.04	127.04	127.02	126.99	126.86	126.81	126.79	126.63	126.45	126.40	126.03	125.70	125.70
10	16.30	128.63	128.66	128.75	128.71	128.01	128.11	128.12	127.77	127.55	127.50	126.40	125.72	125.72
9	15.70	128.63	128.67	128.78	128.78	128.17	128.15	128.14	127.77	127.56	127.55	126.45	125.72	125.72
8	12.00	128.61	128.72	129.22	129.22	128.66	128.58	128.58	127.78	127.77	127.77	126.63	125.75	125.75
7	8.30	129.67	129.65	129.58	129.57	128.98	128.85	128.85	128.58	128.14	128.12	126.79	125.77	125.77
6	7.70	129.68	129.66	129.59	129.56	129.03	128.85	128.85	128.58	128.15	128.11	126.81	125.77	125.77
5	6.00	129.81	129.79	129.70	129.61	129.21	129.03	128.98	128.66	128.17	128.01	126.86	125.78	125.78
4	4.30	130.59	130.59	130.56	130.51	129.61	129.56	129.57	129.22	128.78	128.71	126.99	125.78	125.78
3	3.60	130.59	130.59	130.58	130.56	129.70	129.59	129.58	129.22	128.78	128.75	127.02	125.79	125.79
2	1.80	129.89	130.02	130.59	130.59	129.79	129.66	129.65	128.72	128.67	128.66	127.04	125.79	125.79
1	.00	129.73	129.89	130.59	130.59	129.81	129.68	129.67	128.61	128.63	128.63	127.04	125.79	125.79
		.00	1.80	3.60	4.30	6.00	7.70	8.30	12.00	15.70	16.30	18.78	21.26	21.40
		1	2	3	4	5	6	7	8	9	10	11	12	13

GNF Powdered Fuel ContainerNPC No Heat Load, Foam Block With Tubes and skin 18 Jan 2000 11:08:42

Steady-State Temperature Distribution at Time 0.0000E+00

Z = 3.8037E+01

13	21.40	125.80	125.80	125.80	125.80	125.79	125.78	125.78	125.75	125.72	125.72	125.70	125.69	125.69
12	21.26	125.80	125.80	125.80	125.80	125.79	125.78	125.78	125.75	125.72	125.72	125.70	125.69	125.69
11	18.78	126.71	126.70	126.68	126.66	126.58	126.53	126.51	126.38	126.23	126.18	125.93	125.70	125.70
10	16.30	127.66	127.67	127.68	127.63	127.39	127.33	127.31	127.06	126.84	126.76	126.18	125.72	125.72
9	15.70	127.77	127.79	127.80	127.76	127.52	127.44	127.41	127.13	126.91	126.84	126.23	125.72	125.72
8	12.00	128.00	128.05	128.20	128.18	127.95	127.84	127.80	127.31	127.13	127.06	126.38	125.75	125.75
7	8.30	128.64	128.63	128.57	128.52	128.26	128.11	128.07	127.80	127.41	127.31	126.51	125.78	125.78
6	7.70	128.70	128.68	128.62	128.56	128.30	128.15	128.11	127.84	127.44	127.33	126.53	125.78	125.78
5	6.00	128.87	128.85	128.77	128.71	128.46	128.30	128.26	127.95	127.52	127.39	126.58	125.79	125.79
4	4.30	129.19	129.18	129.13	129.06	128.71	128.56	128.52	128.18	127.76	127.63	126.66	125.80	125.80
3	3.60	129.21	129.21	129.19	129.13	128.77	128.62	128.57	128.20	127.80	127.68	126.68	125.80	125.80
2	1.80	129.00	129.06	129.21	129.18	128.85	128.68	128.63	128.05	127.79	127.67	126.70	125.80	125.80
1	.00	128.93	129.00	129.21	129.19	128.87	128.70	128.64	128.00	127.77	127.66	126.71	125.80	125.80
		.00	1.80	3.60	4.30	6.00	7.70	8.30	12.00	15.70	16.30	18.78	21.26	21.40
		1	2	3	4	5	6	7	8	9	10	11	12	13

GNF Powdered Fuel ContainerNPC No Heat Load, Foam Block With Tubes and skin 18 Jan 2000 11:08:42

Steady-State Temperature Distribution at Time 0.0000E+00

Z = 3.9323E+01

13	21.40	125.83	125.82	125.82	125.82	125.81	125.80	125.79	125.76	125.72	125.72	125.70	125.69	125.69
12	21.26	125.83	125.82	125.82	125.82	125.81	125.80	125.79	125.76	125.72	125.72	125.70	125.69	125.69
11	18.78	126.37	126.36	126.35	126.33	126.29	126.24	126.23	126.12	126.00	125.97	125.83	125.70	125.70
10	16.30	126.90	126.90	126.89	126.86	126.76	126.70	126.67	126.49	126.31	126.26	125.97	125.72	125.72
9	15.70	126.99	126.99	126.98	126.96	126.85	126.78	126.75	126.55	126.37	126.31	126.00	125.72	125.72
8	12.00	127.28	127.30	127.32	127.31	127.20	127.11	127.07	126.76	126.55	126.49	126.12	125.76	125.76
7	8.30	127.68	127.67	127.63	127.59	127.46	127.36	127.32	127.07	126.75	126.67	126.23	125.79	125.79
6	7.70	127.73	127.72	127.67	127.63	127.50	127.39	127.36	127.11	126.78	126.70	126.24	125.80	125.80
5	6.00	127.86	127.85	127.79	127.75	127.62	127.50	127.46	127.20	126.85	126.76	126.29	125.81	125.81
4	4.30	128.00	128.00	127.95	127.91	127.75	127.63	127.59	127.31	126.96	126.86	126.33	125.82	125.82
3	3.60	128.03	128.02	127.99	127.95	127.79	127.67	127.63	127.32	126.98	126.89	126.35	125.82	125.82
2	1.80	127.98	128.00	128.02	128.00	127.85	127.72	127.67	127.30	126.99	126.90	126.36	125.82	125.82
1	.00	127.96	127.98	128.03	128.00	127.86	127.73	127.68	127.28	126.99	126.90	126.37	125.83	125.83
		.00	1.80	3.60	4.30	6.00	7.70	8.30	12.00	15.70	16.30	18.78	21.26	21.40
		1	2	3	4	5	6	7	8	9	10	11	12	13

GNF Powdered Fuel ContainerNPC No Heat Load, Foam Block With Tubes and skin 18 Jan 2000 11:08:42

Steady-State Temperature Distribution at Time 0.0000E+00

Z = 4.0610E+01

13	21.40	125.87	125.87	125.86	125.86	125.84	125.83	125.82	125.77	125.72	125.72	125.69	125.68	125.68
12	21.26	125.87	125.87	125.86	125.86	125.84	125.83	125.82	125.77	125.72	125.72	125.69	125.68	125.68
11	18.78	126.03	126.03	126.02	126.01	125.99	125.96	125.95	125.86	125.78	125.76	125.72	125.69	125.69
10	16.30	126.22	126.21	126.20	126.19	126.16	126.12	126.10	125.98	125.85	125.83	125.76	125.72	125.72
9	15.70	126.26	126.26	126.24	126.23	126.20	126.16	126.14	126.01	125.87	125.85	125.78	125.72	125.72
8	12.00	126.53	126.52	126.51	126.49	126.45	126.39	126.37	126.20	126.01	125.98	125.86	125.77	125.77
7	8.30	126.76	126.75	126.73	126.71	126.66	126.60	126.57	126.37	126.14	126.10	125.95	125.82	125.82
6	7.70	126.79	126.78	126.75	126.74	126.69	126.63	126.60	126.39	126.16	126.12	125.96	125.83	125.83
5	6.00	126.86	126.85	126.82	126.81	126.76	126.69	126.66	126.45	126.20	126.16	125.99	125.84	125.84
4	4.30	126.90	126.90	126.87	126.86	126.81	126.74	126.71	126.49	126.23	126.19	126.01	125.86	125.86
3	3.60	126.92	126.91	126.89	126.87	126.82	126.75	126.73	126.51	126.24	126.20	126.02	125.86	125.86
2	1.80	126.94	126.93	126.91	126.90	126.85	126.78	126.75	126.52	126.26	126.21	126.03	125.87	125.87
1	.00	126.95	126.94	126.92	126.90	126.86	126.79	126.76	126.53	126.26	126.22	126.03	125.87	125.87
		.00	1.80	3.60	4.30	6.00	7.70	8.30	12.00	15.70	16.30	18.78	21.26	21.40
		1	2	3	4	5	6	7	8	9	10	11	12	13

GNF Powdered Fuel ContainerNPC No Heat Load, Foam Block With Tubes and skin 18 Jan 2000 11:08:42

Steady-State Temperature Distribution at Time 0.0000E+00

Z = 4.0750E+01

13	21.40	125.87	125.87	125.86	125.86	125.84	125.83	125.82	125.77	125.72	125.72	125.69	125.68	125.68
12	21.26	125.87	125.87	125.86	125.86	125.84	125.83	125.82	125.77	125.72	125.72	125.69	125.68	125.68
11	18.78	126.03	126.03	126.02	126.01	125.99	125.96	125.95	125.86	125.78	125.76	125.72	125.69	125.69
10	16.30	126.22	126.21	126.20	126.19	126.16	126.12	126.10	125.98	125.85	125.83	125.76	125.72	125.72
9	15.70	126.26	126.26	126.24	126.23	126.20	126.16	126.14	126.01	125.87	125.85	125.78	125.72	125.72
8	12.00	126.53	126.52	126.50	126.49	126.45	126.39	126.37	126.20	126.01	125.98	125.86	125.77	125.77
7	8.30	126.76	126.75	126.73	126.71	126.66	126.60	126.57	126.37	126.14	126.10	125.95	125.82	125.82
6	7.70	126.79	126.78	126.75	126.74	126.69	126.63	126.60	126.39	126.16	126.12	125.96	125.83	125.83
5	6.00	126.85	126.85	126.82	126.81	126.76	126.69	126.66	126.45	126.20	126.16	125.99	125.84	125.84
4	4.30	126.90	126.90	126.87	126.86	126.81	126.74	126.71	126.49	126.23	126.19	126.01	125.86	125.86
3	3.60	126.92	126.91	126.89	126.87	126.82	126.75	126.73	126.50	126.24	126.20	126.02	125.86	125.86
2	1.80	126.94	126.93	126.91	126.90	126.85	126.78	126.75	126.52	126.26	126.21	126.03	125.87	125.87
1	.00	126.95	126.94	126.92	126.90	126.85	126.79	126.76	126.53	126.26	126.22	126.03	125.87	125.87
		.00	1.80	3.60	4.30	6.00	7.70	8.30	12.00	15.70	16.30	18.78	21.26	21.40
		1	2	3	4	5	6	7	8	9	10	11	12	13

3.6.2 Payload Temperature During HAC Fire Event

Since no payload temperatures were available from the certification fire test, the maximum HAC payload temperatures were estimated analytically using an axisymmetrical model of the ICCA. The model used the following assumptions:

- Initial temperature of canister was set at the pretest temperature of 132 °F used for the tests (Appendix 2.10.1, *Certification Tests*).
- Payload consisted of 132.3 lbs. (60 kg) of UO_2 powder per canister.
- The volume of the powder is assumed to fill the entire interior of the canister (1,770 in^3), which is conservative as it maximizes payload contact with the heated canister walls. It also more closely approximates the simulated payload used in the certification tests.
- Powder density = 132.3/1,770=0.075 lb/in^3 (solid UO_2 is 0.395 lb_m/in^3 per NRC Matpro Database[4])
- Powder specific heat = 0.062 Btu/lb_m-°F per NRC Matpro Database
- Powder conductivity = 0.065 Btu/hr-in-°F (NRC Matpro Database predicts a conductivity of 0.337 Btu/hr-in-°F for solid UO_2 at moderate temperatures. Calculating using volumetric fraction k=0.337 x 0.075/0.395=0.064 Btu/hr-in-°F, use 0.065 Btu/hr-in-°F for conservatism)
- Temperatures at surface of ICCA are at the maximum temperatures derived from ICCA II-3 (Appendix 2.10.1, *Certification Tests*) for 30 minutes as shown in Figure 3.6-1. Note that the canister is positioned upside-down to more closely match the test configuration.
- All other material properties are per Section 3.2.
- Heating 7.3 input and output files are provided in Sections 3.6.2.1 and 3.6.2.2, respectively.

After 30 minutes exposed to these high temperatures, the bulk temperature of the payload is 250 °F, with a minimum payload temperature of 202.7 °F. Since water vapor condenses on the coolest surface available, the minimum payload temperature is used to determine the partial pressure due to moisture, which is 12.2 psia at 202.7 °F.

[4] NUREG-0497, *MATPRO – Version 11: A Handbook of Materials Properties for Use in the Analysis of Light Water Reactor Fuel Rod Behavior,* EG&G Idaho, Idaho Falls, February 1979, NUREG-CR/0497.

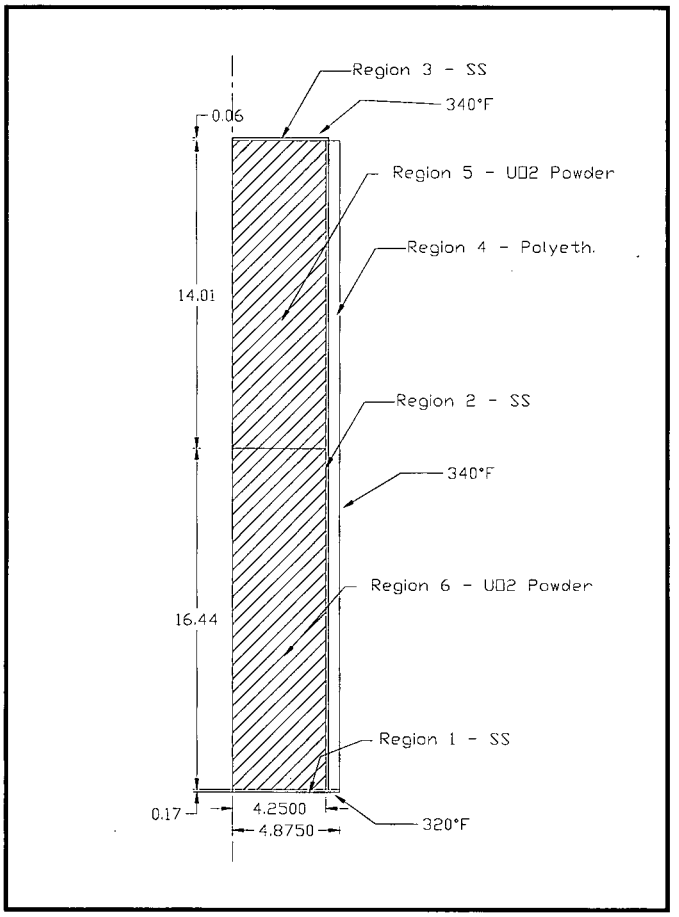

Figure 3.6.-1 - ICCA Payload Thermal Model for HAC Thermal Event

3.6.2.1 Heating 7.3 Input File for Canister Payload Temperature Calculation

```
GNF Powdered FuelNPC Canister, HAC temperature Calculation
* Unfinished SS skin (a=0.5, e=0.5), maximum insolation, 100 F
* Units:  lb, in, hr
100  3 0 0 0
h in lb Btu F
REGIONS
1  1    0.0  4.88   0.0  0.0  0.0  0.17
1  0    0    12      0    0    13   0
2  1    4.25 4.30   0.0  0.0  0.17 30.62
1  0    0    0      0    0    0    0
3  1    0.0  4.30   0.0  0.0  30.62 30.68
1  0    0    12      0    0    0    12
4  3    4.30 4.88   0.0  0.0  0.17 30.62
1  0    0    12      0    0    0    0
5  2    0.0  4.25   0.0  0.0 16.61 30.62
1  0    0     0      0    0    0    0
6  2    0.0  4.25   0.0  0.0  0.17 16.61
1  0    0     0      0    0    0    0
MATERIALS
1  Steel   0.725   0.281   0.111
2  UO2     0.065   0.076   0.062 (Conservative values used vs. 0.064, 0.075, 0.062)
3  polys   0.018  0.035     0.53
INITIAL TEMPERATURE
1  132.0
HEAT GENERATIONS
1  0.00
BOUNDARY CONDITIONS
1  1  1.0 -15
```

```
0.0   9.52e-12 1.0  0.333   0.213 1
-16 0 -17
2  1  1.0 -15
0.0   9.52e-12 1.0  0.333   0.853 1
-16 0 -17
3  1  100.0
0.0   5.95e-14
4  3
0.0   5.23e-12
11 2 340.0

12 2 340.0

13 2 320.0

XGRID
0.0  4.25 4.30 4.88
    4    1    2
YGRID
ZGRID
0.0 0.17 16.61 30.62 30.68
    2    2    6    1
TABULAR FUNCTIONS
15
0.0 100.0 0.01 100.0 0.02 1425.0 0.52 1425.0 0.54 100.0 100.0 100.0
16
0.0 0.0 0.01 0.0 0.02 0.035 0.052 0.035 0.054 0.00 100.0 0.00
17
0.0 0.0013 0.01 0.0013 0.02 0.0 0.52 0.0 0.54 0.0013 100. 0.0013
printout times
0.05 0.1 0.15 0.2 0.25 0.3 0.35 0.4 0.45
TRANSIENT
2 0.5
1.0
0.0002 1.0 0.1 1e5 20.0
%
```

3.6.2.2 Heating 7.3 Output File for Canister Payload Temperature Calculation

```
GNF Powdered FuelNPC Canister, HAC temperature Calculation                24 Oct 2000 16:19:27
                                    Transient Temperature Distribution at Time 5.0000E-01

    12   30.68 |  340.00  340.00  340.00  340.00  340.00  340.00
    11   30.62 |  339.84  339.84  339.86  339.88  339.96  340.00  339.56  340.00
    10   28.29 |  269.54  271.44  277.13  286.43  298.87  298.93  317.28  340.00
     9   25.95 |  227.56  230.75  240.27  255.79  276.46  276.56  305.83  340.00
     8   23.62 |  209.93  213.74  225.06  243.47  267.88  268.00  301.75  340.00
     7   21.28 |  204.17  208.20  220.17  239.60  265.30  265.42  300.59  340.00
     6   18.95 |  202.71  206.80  218.94  238.64  264.69  264.81  300.33  340.00
     5   16.61 |  202.75  206.84  218.99  238.69  264.73  264.85  300.36  340.00
     4    8.39 |  211.80  215.56  226.73  244.90  269.01  269.12  302.41  340.00
     3     .17 |  319.80  319.81  319.83  319.90  320.43  320.45  324.69  340.00
     2     .09 |  319.90  319.90  319.92  319.95  320.23  320.37  322.99  340.00
     1     .00 |  320.00  320.00  320.00  320.00  320.00  320.00  320.00  324.59
                +-------------------------------------------------------------------
                      .00    1.06    2.13    3.19    4.25    4.30    4.59    4.88
                        1       2       3       4       5       6       7       8
```

3.6.3 Material Property Sensitivity Study

Due to manufacturing tolerances, the thermal conductivity and density of the ceramic fiber board and polyurethane foam can vary by as much as -10%/+15%. Similarly, the specific heat of polyurethane foam could vary by as much as ±20%. To assess the impact of this uncertainty, the thermal model used to evaluate the GNF NPC in Section 3.4 was re-evaluated with minimum and maximum material properties for the maximum temperature NCT case. Additionally, a simplified HAC case was run with nominal material properties and maximum conductivity/minimum density to maximize predicted fire temperatures. The results of this study indicated that the uncertainties in material properties have a negligible effect on NCT temperatures, with a maximum increase of 25 °F in the ICCA gasket region for the HAC case. This temperature differential represents an approximate increase of 16% for the maximum-recorded temperature for any ICCA.

3.6.3.1 Material Properties

The polyurethane foam and ceramic fiber board are the only materials utilized in the design of the NPC package that have a significant variation in material properties. Table 3.6-1 provides the maximum and minimum values used in this study for the thermal conductivity, specific heat and density. Note that Table 3.2-1 demonstrates that the ceramic fiber board has similar material properties to the 11 pcf foam, and therefore is not specifically modeled. Specific heat for the ceramic fiber board will not vary significantly based on manufacturing tolerances.

Table 3.6-1 - Material Property Ranges for Sensitivity Study

Material	Thermal Conductivity, Btu/hr-in-°F	Specific Heat, Btu/lb_m-°F	Density, Lb_m/in^3
Polyurethane Foam			
7 lb/ft^3	0.0014 - 0.0021		0.00349 - 0.0041
11 lb/ft^3	0.0016 - 0.0024	0.38 – 0.47	0.00544 - 0.0064
15 lb/ft^3	0.0018 - 0.0027		0.0074 - 0.0087
40 lb/ft^3	0.0031 - 0.0047		0.01964 - 0.0231

3.6.3.2 Normal Conditions of Transport

The thermal model from Section 3.4 was evaluated with the maximum and minimum conductivities documented in Section 3.6.3.1. The resulting temperatures, shown in Figure 3.6-2, indicate that there is little difference in the NCT temperatures due to material property variation.

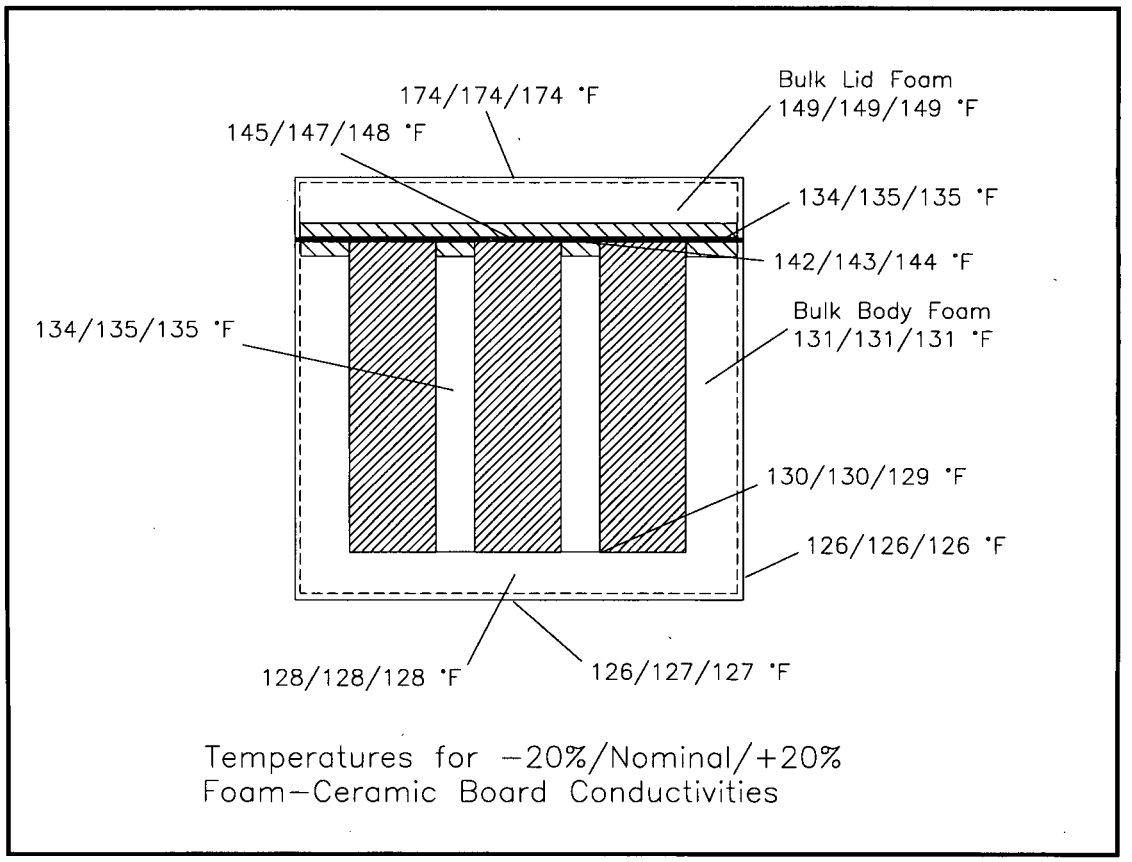

Figure 3.6-2 - NCT Temperature Variation Due to Material Property Uncertainty

3.6.3.3 Hypothetical Accident Conditions

To assess the impact of varying material properties on the peak HAC fire event temperatures, the thermal model from Section 3.4 was evaluated for conditions similar to those prescribed by 10 CFR §71.73(c)(3). Specifically, an undamaged package was exposed to a 30 minute, 1,475 °F (800 °C) fire event. The fire emittance of 0.9, which is recommended by the regulations, was simulated by lowering the boundary condition to 1,425 °F ($Q_{rad} \propto 0.9(1{,}475)^4 = 1.0(1{,}425)^4$). The package emissivity was 0.8. Natural convection was assumed for the pre-fire and post-fire portions of the study, while a forced convection heat transfer coefficient of 5.0 Btu/hr-ft^2-°F was used, which is commensurate with forced convection coefficients calculated from fire tests[5]. Since radiation dominates heat transfer from the fire to the package, the effect of using a 1,425 °F boundary temperature is minimal. The input file for the high conductivity, low density maximum temperature thermal model is provided in Section 3.6.3.3.1.

The resulting temperatures from the two fire cases evaluated, presented in Figure 3.6-3, demonstrate that the impact of material property variation on the package temperatures are minimal. The greatest temperature difference near the ICCA gaskets occurs for the OCA lid

[5] Burgess, M. H., *Heat Transfer Boundary Conditions in Pool Fires*, IAEA-SM-286/75P, Packaging and Transportation of Radioactive Materials, PATRAM '86 Symposium Proceedings, Volume 2, International Atomic Energy Agency, Vienna, Austria.

braided rope, which increases 25 °F with higher conductivity, lower density materials. The bulk polyurethane foam experiences a temperature increase of 29 °F.

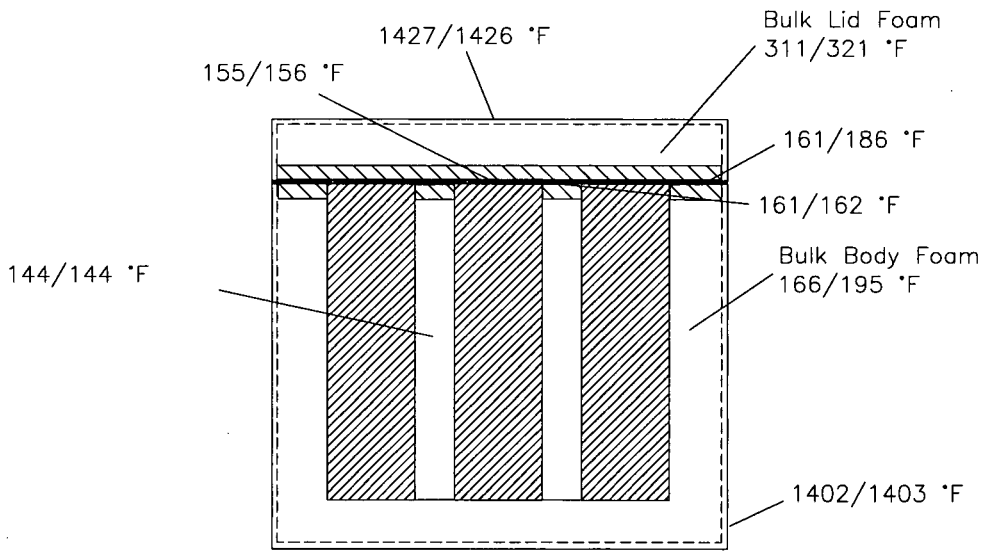

Temperatures for Nominal Foam–Ceramic Board Properties/Minimum Density and Maximum Conductivity for Foam–Ceramic Board at End of 1/2 hr, 1475 °F Fire. No Package Damage Modeled.

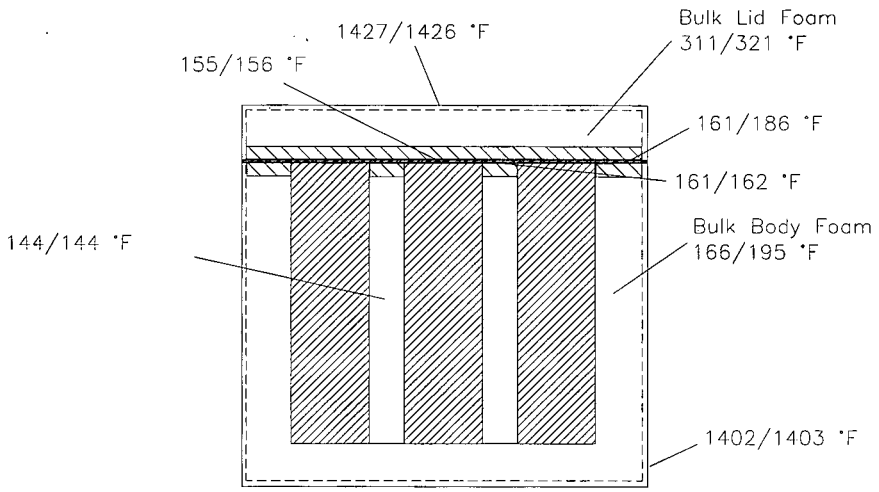

Temperatures for Nominal Foam–Ceramic Board Properties/Minimum Density and Maximum Conductivity for Foam–Ceramic Board at End of 1/2 hr, 1475 °F Fire. No Package Damage Modeled.

Figure 3.6-3 - Temperature Differences for Fire Event for Varying Material Properties

3.6.3.3.1 Heating 7.3 Input File for High Temperature Fire Case

```
GNF Powdered Fuel ContainerNPC No Heat Load, Max Fire
* Unfinished SS skin (a=0.5, e=0.5), maximum insolation, 100 F
* Units:  lb, in, hr
100  6 0 0 0
h in lb Btu F
REGIONS
1  4  0.0  21.4 0.0 21.4 0.0 0.14
1  0   0    1    0    1   2   0
2  7  0.0  21.26 0.0 21.26 0.14 6.12
1  0   0    0    0    0   0   0
3  4  21.26 21.4 0.0 21.26 0.14 6.12
1  0   0      1    0    0    0    0
4  4   0.0  21.4 21.26 21.4 0.14 6.12
1  0   0      1    0    1    0    0
5  2  0.0  21.26 0.0 21.26 7.50 7.63
1  0   0    0    0    0   4   4
6  2  21.26 21.4 0.0 21.26 7.50 7.63
1  0   0      1    0    0    4    4
7  2   0.0  21.4 21.26 21.4 7.50 7.63
1  0   0      1    0    1    4    4
8  1   0.0  21.26  16.3 21.26 9.01 36.75
1  0   0      0     0   0      0     0
9  3   0.0  3.6    15.7 16.30 9.01 36.75
1  0   0       0    0    0      0    0
10 3   3.6  4.3    7.7  16.30 9.01 36.75
1  0   0       0    0    0      0    0
11 3   0.0  3.6     7.7  8.30 9.01 36.75
1  0   0     0      0    0      0    0
12 2   0.0  3.6     8.3  15.7 9.01 36.75
1  0    0    0       0    0    0    0
13 5   4.3  7.7     7.7  16.3 9.01  36.75
1  0    0    0       0    0     0    0
14 3   8.3  15.7    15.7  16.3 9.01 36.75
1  0    0    0       0    0     0    0
15 3   7.7   8.3    7.7   16.3 9.01 36.75
1  0    0    0       0    0     0    0
16 3   15.7  16.3   7.7   16.3 9.01 36.75
1  0    0    0       0     0    0    0
17 3    8.3  15.7   7.7    8.3  9.01 36.75
1  0    0    0       0     0    0    0
18 2   8.3   15.7   8.3   15.7  9.01 36.75
1  0    0    0       0     0    0    0
19 1   16.3  21.26  7.7   16.3  9.01 36.75
1  0    0    0       0     0    0    0
20 5    0.0  16.3   4.3    7.7  9.01 36.75
1  0    0    0       0     0    0    0
21 3    0.0  3.6    3.6    4.3  9.01 36.75
1  0    0    0       0     0    0    0
22 3    3.6  4.3    0.0    4.3  9.01 36.75
1  0    0    0       0     0    0    0
23 2    0.0  3.6    0.0    3.6  9.01 36.75
1  0    0    0       0     0    0    0
24 5    4.3  7.7    0.0    4.3  9.01 36.75
1  0    0    0       0     0    0    0
25 3    7.7  8.3    0.0  4.3    9.01 36.75
1  0    0    0       0     0    0    0
26 3    8.3  15.7   3.6  4.3    9.01 36.75
1  0    0    0       0     0    0    0
27 3    15.7 16.3   0.0  4.3    9.01 36.75
1  0    0    0       0     0    0    0
28 2    8.3  15.7   0.0  3.6    9.01 36.75
1  0    0    0       0     0    0    0
29 1    16.3 21.26  0.0  4.3    9.01 36.75
1  0    0    0       0     0    0    0
30 4    0.0  21.26  21.26 21.40 9.01 36.75
1  0    0    0       0     1    0    0
31 4    21.26 21.40  0.0  21.40 9.01 36.75
1  0    0    1       0     1    0    0
32 1    0.0   21.26  0.0  21.26 36.75 40.61
1  0    0    0       0     0    0    0
```

```
33 4    0.0   21.26 21.26 21.40 36.75 40.61
1  0    0    0       0     1    0    0
34 4    21.26 21.40 0.0   21.40 36.75 40.61
1  0    0    1        0     1    0    0
35 4    0.0   21.4   0.0   21.40  40.61 40.75
1  0    0    1       0     1       0    3
36 1    16.3  21.26  4.3    7.7  9.01 36.75
1  0    0    0       0     0    0    0
37  6  0.0  21.26 0.0 21.26 6.12 7.50
1  0   0    0    0    0   0   0
38  4  21.26 21.4 0.0 21.26 6.12 7.50
1  0   0      1    0    0    0    0
39  4   0.0  21.4 21.26 21.4 6.12 7.50
1  0   0      1    0    1    0    0
40  6   0.0  21.26  16.3 21.26 7.63 9.01
1  0   0      0     0   0      0     0
41  3   0.0  3.6    15.7 16.30 7.63 9.01
1  0   0       0    0    0      0    0
42 3   3.6  4.3    7.7  16.30 7.63 9.01
1  0   0       0    0    0      0    0
43 3   0.0  3.6    7.7  8.30 7.63 9.01
1  0   0     0      0    0      0    0
44 2   0.0  3.6    8.3  15.7 7.63 9.01
1  0    0    0       0    0    0    0
45 6   4.3  7.7    7.7  16.3 7.63 9.01
1  0    0    0       0    0    0    0
46 3   8.3  15.7   15.7  16.3 7.63 9.01
1  0    0    0       0    0    0    0
47 3   7.7   8.3   7.7   16.3 7.63 9.01
1  0    0    0       0    0    0    0
48 3   15.7  16.3  7.7   16.3 7.63 9.01
1  0    0    0       0    0    0    0
49 3    8.3  15.7  7.7    8.3  7.63 9.01
1  0    0    0       0    0    0    0
50 2   8.3   15.7  8.3   15.7  7.63 9.01
1  0    0    0       0    0    0    0
51 6   16.3  21.26  7.7   16.3  7.63 9.01
1  0    0    0       0    0    0    0
52 6    0.0  16.3   4.3    7.7  7.63 9.01
1  0    0    0       0    0    0    0
53 3    0.0  3.6    3.6    4.3  7.63 9.01
1  0    0    0       0    0    0    0
54 3    3.6  4.3    0.0    4.3  7.63 9.01
1  0    0    0       0    0    0    0
55 2    0.0  3.6    0.0    3.6  7.63 9.01
1  0    0    0       0    0    0    0
56 6    4.3  7.7    0.0    4.3  7.63 9.01
1  0    0    0       0    0    0    0
57 3    7.7  8.3    0.0  4.3    7.63 9.01
1  0    0    0       0    0    0    0
58 3    8.3  15.7   3.6  4.3    7.63 9.01
1  0    0    0       0    0    0    0
59 3    15.7 16.3   0.0  4.3    7.63 9.01
1  0    0    0       0    0    0    0
60 2    8.3  15.7   0.0  3.6    7.63 9.01
1  0    0    0       0    0    0    0
61 6    16.3 21.26  0.0  4.3    7.63 9.01
1  0    0    0       0    0    0    0
62 4    0.0  21.26  21.26 21.40 7.63 9.01
1  0    0    0       0    1    0    0
63 4    21.26 21.40  0.0  21.40 7.63 9.01
1  0    0    1       0    1    0    0
64 6    16.3  21.26  4.3    7.7  7.63 9.01
1  0    0    0       0    0    0    0
MATERIALS
1  Foam11  0.0024  0.00544   0.38
2  Air     0.0013 0.0064   0.24
3  Tubes   0.069  0.053    0.37
4  Steel   0.725   0.281   0.111
5  Foam07  0.0021 0.00349   0.38
6  Foam40  0.0047 0.01964   0.38
7  Foam15  0.0027 0.00740   0.38
INITIAL TEMPERATURE
1  132.0
```

```
HEAT GENERATIONS
1  0.00
BOUNDARY CONDITIONS
1  1  1.0 -15
0.0   9.52e-12 1.0  0.333   0.213 1
-16 0 -17
2  1  1.0 -15
0.0   9.52e-12 1.0  0.333   0.853 1
-16 0 -17
3  1  100.0
0.0   5.95e-14
4  3
0.0   3.97e-12
XGRID
0.0  3.6  4.3  7.7  8.3  15.7  16.3  21.26  21.4
    2    1    2    1    2     1     2     1
YGRID
0.0  3.6  4.3  7.7  8.3  15.7  16.3  21.26  21.4
    2    1    2    1    2     1     2     1
ZGRID
0.0  0.14  6.12 7.5  7.63 9.01 36.75 40.61 40.75
    1    4     2    1     1   7     3     1
TABULAR FUNCTIONS
15
0.0 100.0 0.01 100.0 0.02 1425.0 0.52 1425.0 0.54 100.0 100.0 100.0
16
0.0 0.0 0.01 0.0 0.02 0.035 0.052 0.035 0.054 0.00 100.0 0.00
17
0.0 0.0013 0.01 0.0013 0.02 0.0 0.52 0.0 0.54 0.0013 100. 0.0013
printout times
0.02 0.52 1.02
STEADY-STATE
1
TRANSIENT
2 2.0
1.0
0.0002 1.0 0.1 1e5 20.0
%
```