Westinghouse

Westinghouse Electric Company
Nuclear Power Plants
P.O. Box 355
Pittsburgh, Pennsylvania 15230-0355
USA

U.S. Nuclear Regulatory Commission
ATTENTION: Document Control Desk
Washington, D.C. 20555

Direct tel: 412-374-6206
Direct fax: 724-940-8505
e-mail: sisk1rb@westinghouse.com

Your ref: Docket Number 52-006
Our ref: DCP_NRC_002850

April 26, 2010

References:
1. DCP_NRC_002744, Re-submittal of Proposed Changes for AP1000 Design Control Document Rev.18, January 20, 2010
2. DCP_NRC_002818, Supplementary Information to DCP_NRC_002744 – Re-Submittal of Proposed Changes for AP1000 Design Control Document Rev.18, March 12, 2010

Subject: Final Information on Proposed Changes for the AP1000 Design Control Document Rev. 18

This letter is submitted in support of the AP1000 Design Certification Amendment Application (Docket No. 52-006). The information provided is generic and is expected to apply to all Combined License (COL) applicants referencing the AP1000 Design Certification and the AP1000 Design Certification Amendment Application.

This submittal contains proprietary information of Westinghouse Electric Company, LLC. In conformance with the requirements of 10 CFR Section 2.390, as amended, of the Commission's regulations, we are enclosing with this submittal one copy of the Application for Withholding, AW-10-2790 (non-proprietary, Enclosure 1), and one copy of the associated Affidavit (non-proprietary, Enclosure 2) with Proprietary Information and Copyright Notices. The affidavit sets forth the basis on which the information identified as proprietary may be withheld from public disclosure by the Commission. Pursuant to 10 CFR 50.30(b), "Description of Proposed Changes for AP1000 DCD Rev. 18 – Proprietary" and "Description of Proposed Changes for AP1000 DCD Rev. 18 – Non-Proprietary" are submitted as Enclosures 3 and 4. Correspondence with respect to the affidavit or Application for Withholding should include our reference number AW-10-2790 and should be addressed to James A. Gresham, Manager, Regulatory Compliance and Plant Licensing, Westinghouse Electric Company, LLC, P. 0. Box 355, Pittsburgh, Pennsylvania 15230-0355.

Westinghouse provided preliminary information on changes which it proposed to include in Revision 18 of the AP1000 Design Control Document (DCD-18) in a January 20, 2010 letter (Reference 1). Supplementary information on some of those changes requested by the NRC was provided in a March 12, 2010 letter (Reference 2). The purpose of this letter is to provide final information for seven of those changes that have been determined to meet one or more of the Interim Staff Guidance-11 (ISG-11) criteria for reporting to the NRC staff. It is expected that none of the remaining changes in the January 20, 2010 letter meet the ISG-11 criteria; however, we will complete formal evaluations for these remaining changes by about April 30, 2010. If it is determined that any of them meet the ISG-11 criteria, the NRC will be notified promptly.

D063
NRO

The seven changes from the January 20 letter (Reference 1) that meet the ISG-11 criteria are Change Numbers (CNs) 1, 5, 6, 8, and 9 (numbered consistently with changes in the January 20 letter). The January 20 letter also stated that CNs 14 and 55 did not meet any of the ISG-11 criteria; however, our final evaluation has concluded that, in fact, they do meet one or more of the ISG-11 criteria. These changes are described in Enclosure 3, including the reasons for the changes and the sections of the DCD which are impacted. Enclosure 4 provides a non-proprietary version of the information in Enclosure 3 and Enclosure 5 provides a copy of the revised DCD pages.

In addition, the January 20 letter indicated that CN 4 did meet one or more of the ISG-11 criteria; however, our final evaluation has concluded that it does not.

As noted previously, the changes described in this and the referenced letters do not constitute all of the changes which Westinghouse proposes to include in DCD-18. Rather, the changes in this letter are in addition to those which Westinghouse either has submitted or will submit to the NRC as responses to Requests for Additional Information or Safety Evaluation Report Open Items.

Westinghouse will work with the NRC staff to disposition the changes described in this letter as expeditiously as possible. Questions related to the content of this letter should be directed to Westinghouse. Please send copies of such questions to the prospective COL applicants referencing the AP1000 Design Certification. A representative for each applicant is included on the cc: list of this letter.

Very truly yours,

Robert Sisk, Manager
Licensing and Customer Interface
Regulatory Affairs and Strategy

/Enclosures

1. AW-10-2790, Application for Withholding Proprietary Information from Disclosure, dated April 26, 2010
2. AW-10-2790, Affidavit, Proprietary Information Notice, Copyright Notice dated April 26, 2010
3. Description of Proposed Changes for AP1000 DCD Rev. 18, Proprietary
4. Description of Proposed Changes for AP1000 DCD Rev. 18, Non-Proprietary
5. DCD Pages

cc:	D. Jaffe	-	U.S. NRC	5E
	E. McKenna	-	U.S. NRC	5E
	P. Kallen	-	U.S. NRC	5E
	T. Spink	-	TVA	5E
	P. Hastings	-	Duke Power	5E
	R. Kitchen	-	Progress Energy	5E
	A. Monroe	-	SCANA	5E
	P. Jacobs	-	Florida Power & Light	5E
	C. Pierce	-	Southern Company	5E
	E. Schmiech	-	Westinghouse	5E
	G. Zinke	-	NuStart/Entergy	5E
	R. Grumbir	-	NuStart	5E
	M. Melton	-	Westinghouse	5E

ENCLOSURE 1

AW-10-2790

APPLICATION FOR WITHHOLDING
PROPRIETARY INFORMATION FROM DISCLOSURE

Westinghouse

Westinghouse Electric Company
Nuclear Services
P.O. Box 355
Pittsburgh, Pennsylvania 15230-0355
USA

U.S. Nuclear Regulatory Commission
ATTENTION: Document Control Desk
Washington, D.C. 20555

Direct tel: 412-374-6206
Direct fax: 412-374-5005
e-mail: sisk1rb@westinghouse.com

Your ref: Docket Number 52-006
Our ref: AW-10-2790

April 26, 2010

APPLICATION FOR WITHHOLDING PROPRIETARY
INFORMATION FROM PUBLIC DISCLOSURE

Subject: Final Information on Proposed Changes for the AP1000 Design Control Document Rev. 18

The Application for Withholding is submitted by Westinghouse Electric Company, LLC (Westinghouse), pursuant to the provisions of Paragraph (b) (1) of Section 2.390 of the Commission's regulations. It contains commercial strategic information proprietary to Westinghouse and customarily held in confidence.

The proprietary material for which withholding is being requested is identified in the proprietary version of the subject report. In conformance with 10 CFR Section 2.390, Affidavit AW-10-2790 accompanies this Application for Withholding, setting forth the basis on which the identified proprietary information may be withheld from public disclosure.

Accordingly, it is respectively requested that the subject information which is proprietary to Westinghouse be withheld from public disclosure in accordance with 10 CFR Section 2.390 of the Commission's regulations.

Correspondence with respect to this Application for Withholding or the accompanying affidavit should reference AW-10-2790 and should be addressed to James A. Gresham, Manager, Regulatory Compliance and Plant Licensing, Westinghouse Electric Company, LLC, P.O. Box 355, Pittsburgh, Pennsylvania, 15230-0355.

Very truly yours,

Robert B. Sisk
Manager
Licensing and Customer Interface

cc: G. Bacuta - U.S. NRC

0503ljb.doc

ENCLOSURE 2

Affidavit

AW-10-2790
April 26, 2010

AFFIDAVIT

COMMONWEALTH OF PENNSYLVANIA:

ss

COUNTY OF ALLEGHENY:

Before me, the undersigned authority, personally appeared Robert B. Sisk, who, being by me duly sworn according to law, deposes and says that he is authorized to execute this Affidavit on behalf of Westinghouse Electric Company LLC (Westinghouse), and that the averments of fact set forth in this Affidavit are true and correct to the best of his knowledge, information, and belief:

Robert B. Sisk
Manager
Licensing and Customer Interface

Sworn to and subscribed
before me this 26th day
of April 2010.

COMMONWEALTH OF PENNSYLVANIA
Notarial Seal
Linda J. Bugle, Notary Public
City of Pittsburgh, Allegheny County
My Commission Expires June 18, 2013
Member, Pennsylvania Association of Notaries

Notary Public

0503ljb.doc

(1) I am Manager, Licensing and Customer Interface, Westinghouse Electric Company, LLC (Westinghouse), and as such, I have been specifically delegated the function of reviewing the proprietary information sought to be withheld from public disclosure in connection with nuclear power plant licensing and rule making proceedings, and am authorized to apply for its withholding on behalf of Westinghouse.

(2) I am making this Affidavit in conformance with the provisions of 10 CFR Section 2.390 of the Commission's regulations and in conjunction with the Westinghouse "Application for Withholding" accompanying this Affidavit.

(3) I have personal knowledge of the criteria and procedures utilized by Westinghouse in designating information as a trade secret, privileged or as confidential commercial or financial information.

(4) Pursuant to the provisions of paragraph (b)(4) of Section 2.390 of the Commission's regulations, the following is furnished for consideration by the Commission in determining whether the information sought to be withheld from public disclosure should be withheld.

(i) The information sought to be withheld from public disclosure is owned and has been held in confidence by Westinghouse.

(ii) The information is of a type customarily held in confidence by Westinghouse and not customarily disclosed to the public. Westinghouse has a rational basis for determining the types of information customarily held in confidence by it and, in that connection, utilizes a system to determine when and whether to hold certain types of information in confidence. The application of that system and the substance of that system constitutes Westinghouse policy and provides the rational basis required.

Under that system, information is held in confidence if it falls in one or more of several types, the release of which might result in the loss of an existing or potential competitive advantage, as follows:

(a) The information reveals the distinguishing aspects of a process (or component, structure, tool, method, etc.) where prevention of its use by any of Westinghouse's competitors without license from Westinghouse constitutes a competitive economic advantage over other companies.

(b) It consists of supporting data, including test data, relative to a process (or component, structure, tool, method, etc.), the application of which data secures a competitive economic advantage, e.g., by optimization or improved marketability.

(c) Its use by a competitor would reduce his expenditure of resources or improve his competitive position in the design, manufacture, shipment, installation, assurance of quality, or licensing a similar product.

(d) It reveals cost or price information, production capacities, budget levels, or commercial strategies of Westinghouse, its customers or suppliers.

(e) It reveals aspects of past, present, or future Westinghouse or customer funded development plans and programs of potential commercial value to Westinghouse.

(f) It contains patentable ideas, for which patent protection may be desirable.

There are sound policy reasons behind the Westinghouse system which include the following:

(a) The use of such information by Westinghouse gives Westinghouse a competitive advantage over its competitors. It is, therefore, withheld from disclosure to protect the Westinghouse competitive position.

(b) It is information that is marketable in many ways. The extent to which such information is available to competitors diminishes the Westinghouse ability to sell products and services involving the use of the information.

(c) Use by our competitor would put Westinghouse at a competitive disadvantage by reducing his expenditure of resources at our expense.

(d) Each component of proprietary information pertinent to a particular competitive advantage is potentially as valuable as the total competitive advantage. If competitors acquire components of proprietary information, any one component

may be the key to the entire puzzle, thereby depriving Westinghouse of a competitive advantage.

(e) Unrestricted disclosure would jeopardize the position of prominence of Westinghouse in the world market, and thereby give a market advantage to the competition of those countries.

(f) The Westinghouse capacity to invest corporate assets in research and development depends upon the success in obtaining and maintaining a competitive advantage.

(iii) The information is being transmitted to the Commission in confidence and, under the provisions of 10 CFR Section 2.390, it is to be received in confidence by the Commission.

(iv) The information sought to be protected is not available in public sources or available information has not been previously employed in the same original manner or method to the best of our knowledge and belief.

(v) The proprietary information sought to be withheld in this submittal is that which is appropriately marked in "Final Information on Proposed Changes for the AP1000 Design Control Document Rev. 18" in support of the AP1000 Design Certification Amendment Application, being transmitted by Westinghouse letter (DCP_NRC_002850) and Application for Withholding Proprietary Information from Public Disclosure, to the Document Control Desk. The proprietary information as submitted by Westinghouse for the AP1000 Design Certification Amendment application is expected to be applicable in all licensee submittals referencing the AP1000 Design Certification and the AP1000 Design Certification Amendment Application in response to certain NRC requirements for justification of compliance of the safety system to regulations.

This information is part of that which will enable Westinghouse to:

(a) Manufacture and deliver products to utilities based on proprietary designs.

(b) Advance the AP1000 Design and reduce the licensing risk for the application of the AP1000 Design Certification

(c) Determine compliance with regulations and standards

(d) Establish design requirements and specifications for the system.

Further this information has substantial commercial value as follows:

(a) Westinghouse plans to sell the use of similar information to its customers for purposes of plant construction and operation.

(b) Westinghouse can sell support and defense of safety systems based on the technology in the reports.

(c) The information requested to be withheld reveals the distinguishing aspects of an approach and schedule which was developed by Westinghouse.

Public disclosure of this proprietary information is likely to cause substantial harm to the competitive position of Westinghouse because it would enhance the ability of competitors to provide similar digital technology safety systems and licensing defense services for commercial power reactors without commensurate expenses. Also, public disclosure of the information would enable others to use the information to meet NRC requirements for licensing documentation without purchasing the right to use the information.

The development of the technology described in part by the information is the result of applying the results of many years of experience in an intensive Westinghouse effort and the expenditure of a considerable sum of money.

In order for competitors of Westinghouse to duplicate this information, similar technical programs would have to be performed and a significant manpower effort, having the requisite talent and experience, would have to be expended.

Further the deponent sayeth not.

PROPRIETARY INFORMATION NOTICE

Transmitted herewith are proprietary and/or non-proprietary versions of documents furnished to the NRC in connection with requests for generic and/or plant-specific review and approval.

In order to conform to the requirements of 10 CFR 2.390 of the Commission's regulations concerning the protection of proprietary information so submitted to the NRC, the information which is proprietary in the proprietary versions is contained within brackets, and where the proprietary information has been deleted in the non-proprietary versions, only the brackets remain (the information that was contained within the brackets in the proprietary versions having been deleted). The justification for claiming the information so designated as proprietary is indicated in both versions by means of lower case letters (a) through (f) located as a superscript immediately following the brackets enclosing each item of information being identified as proprietary or in the margin opposite such information. These lower case letters refer to the types of information Westinghouse customarily holds in confidence identified in Sections (4)(ii)(a) through (4)(ii)(f) of the affidavit accompanying this transmittal pursuant to 10 CFR 2.390(b)(1).

COPYRIGHT NOTICE

The reports transmitted herewith each bear a Westinghouse copyright notice. The NRC is permitted to make the number of copies of the information contained in these reports which are necessary for its internal use in connection with generic and plant-specific reviews and approvals as well as the issuance, denial, amendment, transfer, renewal, modification, suspension, revocation, or violation of a license, permit, order, or regulation subject to the requirements of 10 CFR 2.390 regarding restrictions on public disclosure to the extent such information has been identified as proprietary by Westinghouse, copyright protection notwithstanding. With respect to the non-proprietary versions of these reports, the NRC is permitted to make the number of copies beyond those necessary for its internal use which are necessary in order to have one copy available for public viewing in the appropriate docket files in the public document room in Washington, DC and in local public document rooms as may be required by NRC regulations if the number of copies submitted is insufficient for this purpose. Copies made by the NRC must include the copyright notice in all instances and the proprietary notice if the original was identified as proprietary.

ENCLOSURE 4

Description of Proposed Changes for AP1000 DCD Rev. 18, Non-Proprietary

Change No. 1

Subject

PWS Valve and Piping Material Changes

DCD Sections Impacted

Tier 2: Table 3.2-3 (Sheet 14/68), Table 3.9-12 (Sheet 2/7), Table 3.9-16 (Sheet 8, 24/24), Table 3.11-1 (Sheet 21,33/50), Table 3I.6-3 (Sheet 5, 14/31), Section 9.2.5.1.1

Description of change to DCD/Reason for change to DCD

Description of DCD Change

1) Change Table 3.2-3, PWS MCR Isolation from AP1000 Class B to C
2) No DCD figure change. P&ID not in DCD
3) No DCD change for the pipe class modification
4) Change check valve V418 to a ball valve in Table 3.2-3. Add V418 to Table 3.9-16. Add V418 to Table 3.9-12. Add ball valve V418 to Table 3.11-1. Delete Check valve V418 from 3.11-1. Add V418 to Table 3I.6-3.
5) The addition of the loop seal is reflected in the P&ID which is not in the DCD.
6) The L418 size increase is reflected in the P&ID which is not in the DCD.
7) Change V420 in Table 3.9-16 to reflect the mission of Transfer CLOSED.
8) No change to the DCD for the addition of V497
9) Add V498 to Table 3.2-3, 3.9-16, 3.9-12, 3.11-1, 3I.6-3.
10) Add PWS acronym to Table 3.9-16
11) State that the PWS serves no safety-related function other than to provide for MCR isolation.

Description of Design Change

1) Change the PWS line L319 to be Safety Class C
2) Revise PWS P&ID to reflect stainless steel pipe
3) Change pipe class at V418 to JBC
4) Delete Check valve V418, add ball valve V418.
5) Add a loop seal constructed of seismic piping material that remains filled after a seismic event.
6) L418 & L319 are increased from 1" to 2".
7) Change V420 in Table 3.9-16 to reflect the mission of Transfer CLOSED.
8) Added V497 at the outlet of the PWS tank to isolate during maintenance.
9) Added a vacuum breaker downstream of the loop seal.
10) Add PWS acronym to Table 3.9-16
11) Above changes made to portion of PWS that penetrates the MCR pressure boundary.

Reason for Design Change

[ ]a,c

F-APP-GW-GAP-129-1 Rev. 0

a,c

ISG-11 Review Results	
Must the change be included in the next DCD Revision?	☒ Yes ☐ No

Change No. 5

Subject

Steel Containment Vessel Girder and Polar Crane Rail Clip Design

DCD Sections Impacted

Tier 2: Figure 3.8.2-1 (Sheets 1,3/3)

Description of change to DCD/Reason for change to DCD

Description of DCD Change:
Dimension changes to the Containment Vessel General Outline.

Description of Design Change:

1) The thickness of the girder top plates increased from 1.5" to 1.75".
2) Remove the Gantrex Pad. Replace with bolted clip design.
3) The SCV girder is extended inward by 2.75".

Reason for Design Change:

a,c

ISG-11 Review Results

Must the change be included in the next DCD Revision?	☒ Yes ☐ No

Change No. 6

Subject
CCS Relief Valves V302A/B Size Change
DCD Sections Impacted
Tier 2: Section 3.4.1.2.2.2, Section 9.2.2.3.4, Section 9.2.2.4.5.2, Figure 9.2.2-2 (Shs 1,3/5), Section 19E.2.5
Description of change to DCD/Reason for change to DCD
Description of DCD Change: Increase size of RNS heat exchanger CCS side relief valves. Increase size of vent on CCS surge tank. Description of means of protecting CCS from overpressure if RNS HX tube leakage occurs during plant cooldown or shutdown operations. Description of Design Change: RNS heat exchanger CCS relief valves increased in size from 1" x 1" to 3" x 4" to meet required flow capacity requirement. CCS surge tank vent line increased in size from 2" to 3" NPS. Reason for Design Change:
ISG-11 Review Results
Must the change be included in the next DCD Revision? ☒ Yes ☐ No

a,c

Change No. 8

Subject

Squib Valve Actuation Time Adjustments

DCD Sections Impacted

Tier 2: Figure 7.2-1 (Sh 16,20/20)

Description of change to DCD/Reason for change to DCD

Description of DCD Change

A note is added to Figure 7.2-1 of the DCD to indicate that redundant components in parallel configuration will be actuated on a time delay in order to prevent simultaneous actuation of the components.

Description of Design Change

Changes will be made to PMS and DAS Controls for PXS IRWST Injection Squib Valves actuation to account for the unacceptable design stress on DVI line piping during simultaneous actuation of squib valve in parallel configuration. This will be accomplished by incorporating a time delay in PXS actuation control for the automatic (and manual) actuation circuitry between the firing of the first and second valve for each pair of squib valves in the same process line. The same changes will be made on PXS containment sump recirculation squib valves PMS controls only, since DAS controls already provide a separate manual actuation of squib valves in parallel path of the same process line.

Reason for Design Change

[ ]a,c

ISG-11 Review Results

Must the change be included in the next DCD Revision?	☒ Yes ☐ No

Change No. 9

Subject

Revisions to CCS Relief Valve Discharge Headers

DCD Sections Impacted

Tier 2: Figure 9.2.2-2 (Sheet 3/5)

Description of change to DCD/Reason for change to DCD

Description of DCD Change:
Show modifications to relief valve discharge collection headers for auxiliary building CCS relief valves

Description of Design Change:

1) Eliminate RNS heat exchanger relief valve discharge lines from thermal relief valve header
2) Provide separate collection headers for RNS relief valve discharges
3) Provide funnel collector for RNS heat exchanger relief valve discharge tailpieces that connects to main drain header in auxiliary building

Reason for Design Change:

a,c

ISG-11 Review Results

Must the change be included in the next DCD Revision?	☒ Yes ☐ No

Change No. 14

Subject

Fuel Transfer Tube Code Change

DCD Sections Impacted

Tier 2: Table 3.2-3 (Sheet 6 of 68), Figure 3.8.2-4 (Sheet 5 of 6)

Description of change to DCD/Reason for change to DCD

Description of DCD Change:

1) Added statement to the comments column for Tag Number FHS-FT-01 stating Jurisdictional boundary CV only, remaining portion optional.

2) Changed principal construction code column from ASME III 2 to ASME III Class MC.

3) Updated Figure 3.8.2-4 (Sheet 5 of 6) to show revised fuel transfer tube configuration.

Description of Design Change:

1) Correctly assign the jurisdictional boundary classification for the FTT. The entire FTT will be fabricated as ASME Class MC, but only the actual primary containment pressure boundary will be identified jurisdictional Class MC. The remaining non-containment pressure boundary will be identified as MC optional.

2) Designate the FTT blind flange as ASME Section III Class MC

3) The design model of the FTT gate valve was changed from non-safety class valve to Safety Class C, Seismic 1, ASME Sect III, Subsection ND, Class 3 Gate Valve. Modifications were made to provide clearance between the gate valve and the CA20 module.

Reason for Design Change:

a,c

ISG-11 Review Results

Must the change be included in the next DCD Revision?	☒ Yes ☐ No

Change No. 55

Subject

SFS Valve Design Changes Position Indication

DCD Sections Impacted

Tier 1: Table 2.3.7-1, Table 2.3.7-2
Tier 2: Table 3.2-3(sh 46/68), Table 3.9-16 (sh 16, 17/24), Table 3.11-1 (sh 42, 43/50), Table 3I.6-3 (sh 23/31), Table 7.5-1 (sh 7/12), Table 7.5-7 (sh 3/4)

Description of change to DCD/Reason for change to DCD

Description of DCD Change:
Add V075 to ITAAC Table 2.3.7-1
Add SFS containment floodup line to ITAAC Table 2.3.7-2
Add V075 to AP1000 Classification of Mechanical and Fluid Systems, Components, and Equipment.
Add V031, V033, and V075 to Valve Inservice Test Requirements
Add V031 and V033 limit switches to Environmentally Qualified Electrical and Mechanical Equipment.
Add V075 limit switch to Environmentally Qualified Electrical and Mechanical Equipment.
Add V075 to AP1000 Safety-Related Electrical and Mechanical Equipment not High Frequency Sensitive component list.
Add valve status to list of Post Accident Monitoring System component requirements.
Add valve status to Summary of Type D Variables and Type/Category requirements.

Description of Design Change:
Add two external 1E limit switches (open/closed) to valves:
SFS-PL-V031 (SFS Refueling Cavity Drain to SGS Compartment Isolation)
SFS-PL-V033 (SFS Refueling Cavity Drain to Compartment Sump Isolation)
SFS-PL-V075 (SFS Containment Floodup Isolation Valve)

Reason for Design Change:

a,c

ISG-11 Review Results

Must the change be included in the next DCD Revision?	☒ Yes ☐ No

ENCLOSURE 5

DCD Pages

Change Number 1

Table 3.2-3 (Sheet 14 of ~~65~~68)

AP1000 CLASSIFICATION OF MECHANICAL AND FLUID SYSTEMS, COMPONENTS, AND EQUIPMENT

Tag Number	Description	AP1000 Class	Seismic Category	Principal Construction Code	Comments
Primary Sampling System (Continued)					
PSS-PL-V046	Air Sample Line Containment Isolation ORC	B	I	ASME III-2	
PSS-PL-V076A	Containment Testing Boundary Isolation Valve	C	I	ASME III-3	
PSS-PL-V076B	Containment Testing Boundary Isolation Valve	C	I	ASME III-3	
PSS-PL-V082	Containment Isolation Test Connection Isolation Valve	C	I	ASME III-3	
PSS-PL-V083	Containment Isolation Test Connection Isolation Valve	C	I	ASME III-3	
PSS-PL-V085	Containment Isolation Test Connection Isolation Valve	B	I	ASME III-2	
PSS-PL-V086	Containment Isolation Test Connection Isolation Valve	C	I	ASME III-3	
PSS-PY-C01	Common Primary Sample Line Penetration	B	I	ASME III, MC	
PSS-PY-C02	Containment Atmosphere Sample Line Penetration	B	I	ASME III, MC	
PSS-PY-C03	Containment Atmosphere Sample Line Penetration	B	I	ASME III, 2	
Balance of system components are Class E					
Potable Water System (PWS)					Location: Various
PWS-PL-V418	PWS MCR Isolation Valve	C	I	ASME III-3	
PWS-PL-V498	PWS MCR Vacuum Breaker	C	I	ASME III-3	
~~PWS-PL-V018~~	~~MCR Potable Water Inlet Check Valve~~	~~B~~	~~I~~	~~ASME III-2~~	
PWS-PL-V420	PWS MCR Isolation Valve	C~~B~~	I	ASME III-3~~2~~	
Balance of system components are Class E					
Passive Core Cooling System (PXS)					Location: Containment
PXS-ME-01	Passive Residual Heat Removal Heat Exchanger	A	I	ASME III-1	
PXS-MT-01A	Accumulator Tank A	C	I	ASME III-3	
PXS-MT-01B	Accumulator Tank B	C	I	ASME III-3	
PXS-MT-02A	Core Makeup Tank A	A	I	ASME III-1	
PXS-MT-02B	Core Makeup Tank B	A	I	ASME III-1	
PXS-MT-03	In-Containment Refueling Water Storage Tank	C	I	ACI 349/AISC N690	ACI 349 is used for Evaluation

Table 3.9-12 (Sheet 2 of 7)

LIST OF ASME CLASS 1, 2, AND 3 ACTIVE VALVES

Valve No.	Description	Function[a]
Passive Containment Cooling System		
PCS-PL-V001A	Passive Containment Cooling Water Storage Tank Isolation	3,4
PCS-PL-V001B	Passive Containment Cooling Water Storage Tank Isolation	3,4
PCS-PL-V001C	Passive Containment Cooling Water Storage Tank Isolation	3,4
PCS-PL-V002A	Passive Containment Cooling Water Storage Tank Series Isolation	3,4
PCS-PL-V002B	Passive Containment Cooling Water Storage Tank Series Isolation	3,4
PCS-PL-V002C	Passive Containment Cooling Water Storage Tank Series Isolation	3,4
PCS-PL-V005	Passive Containment Cooling Water Storage Tank Supply to Fire Protection System Isolation Manual Stop-Check Valve	3,4
PCS-PL-V009	Spent Fuel Pool Emergency Makeup Isolation	3
PCS-PL-V015	Water Bucket Makeup Line Drain Valve	3,4
PCS-PL-V020	Water Bucket Makeup Line Isolation Valve	3,4
PCS-PL-V023	PCS Recirculation Return Isolation Manual Stop Check Valve	3,4
PCS-PL-V039	PCCWST Long-Term Makeup Check Valve	3,4
PCS-PL-V042	PCCWST Long Term Makeup Isolation Drain Valve	3,4
PCS-PL-V044	PCCWST Long Term Makeup Isolation Valve	3,4
PCS-PL-V045	Emergency Makeup to the Spent Fuel Pool Isolation Valve	3
PCS-PL-V046	PCCWST Recirculation Return Isolation Valve	3,4
PCS-PL-V049	Emergency Makeup to the Spent Fuel Pool Drain Isolation Valve	3
PCS-PL-V050	Spent Fuel Pool Long Term Makeup Isolation Valve	3
PCS-PL-V051	Spent Fuel Pool Emergency Makeup Lower Isolation Valve	3
Primary Sampling System		
PSS-PL-V008	Containment Isolation – Containment Air Sample Isolation	2
PSS-PL-V010A	Containment Isolation – Liquid Sample Line	2
PSS-PL-V010B	Containment Isolation – Liquid Sample Line	2
PSS-PL-V011	Containment Isolation – Liquid Sample Line	2
PSS-PL-V023	Containment Isolation – Sample Return Line	2
PSS-PL-V024	Containment Isolation – Sample Return Check	2
PSS-PL-V046	Containment Isolation – Air Sample Line	2
Potable Water System		
PWS-PL-V418	PWS MCR Isolation Valve	3
PWS-PL-V420	PWS MCR Isolation Valve	3
PWS-PL-V498	PWS MCR Vacuum Breaker Valve	3
Passive Core Cooling System		
PXS-PL-V014A	Core Makeup Tank A Discharge Isolation	3,4
PXS-PL-V014B	Core Makeup Tank B Discharge Isolation	3,4
PXS-PL-V015A	Core Makeup Tank A Discharge Isolation	3,4
PXS-PL-V015B	Core Makeup Tank B Discharge Isolation	3,4

Table 3.9-16 (Sheet 8 of 2~~3~~4)

VALVE INSERVICE TEST REQUIREMENTS

Valve Tag Number	Description[1]	Valve/Actuator Type	Safety-Related Missions	Safety Functions[2]	ASME Class/ IST Category	Inservice Testing Type and Frequency	IST Notes
PSS-PL-V046	Air Sample Line Containment Isolation ORC	Remote AO GLOBE	Maintain Close Transfer Close	Active-to-Failed Containment Isolation Safety Seat Leakage Remote Position	Class 2 Category A	Remote Position Indication, Exercise/2 Years Containment Isolation Leak Test Exercise Full Stroke/Quarterly Operability Test	27, 31
PWS-PL-V418	PWS MCR Isolation Valve	Manual	Transfer Close Maintain Close	Active	Class 3 Category B	Exercise Full Stroke/2 Years	
PWS-PL-V420	PWS MCR Isolation Valve	Manual	Transfer Close Maintain Close	Active	Class 3 Category B	Exercise Full Stroke/2 Years	
PWS-PL-V498	PWS MCR Vacuum Breaker	Check	Transfer Open Transfer Close Maintain Close	Active	Class 3 Category C	Check Exercise/Quarterly	
~~PWS-PL-V420~~	~~PWS MCR Isolation Valve~~	~~Manual~~	~~Transfer Open~~ ~~Maintain Close~~	~~Active~~	~~Category B~~	~~Exercise Full Stroke/2 Years~~	
PXS-PL-V002A	Core Makeup Tank A Cold Leg Inlet Isolation	Remote MO GATE	Maintain Open	Remote Position	Class 1 Category B	Remote Position Indication, Exercise/2 Years	
PXS-PL-V002B	Core Makeup Tank B Cold Leg Inlet Isolation	Remote MO GATE	Maintain Open	Remote Position	Class 1 Category B	Remote Position Indication, Exercise/2 Years	
PXS-PL-V014A	Core Makeup Tank A Discharge Isolation	Remote AO GLOBE	Maintain Open Transfer Open	Active-to-Failed Remote Position	Class 1 Category B	Remote Position Indication, Exercise/2 Years Exercise Full Stroke/Quarterly Operability Test	31
PXS-PL-V014B	Core Makeup Tank B Discharge Isolation	Remote AO GLOBE	Maintain Open Transfer Open	Active-to-Failed Remote Position	Class 1 Category B	Remote Position Indication, Exercise/2 Years Exercise Full Stroke/Quarterly Operability Test	31
PXS-PL-V015A	Core Makeup Tank A Discharge Isolation	Remote AO GLOBE	Maintain Open Transfer Open	Active-to-Failed Remote Position	Class 1 Category B	Remote Position Indication, Exercise/2 Years Exercise Full Stroke/Quarterly Operability Test	31
PXS-PL-V015B	Core Makeup Tank B Discharge Isolation	Remote AO GLOBE	Maintain Open Transfer Open	Active-to-Failed Remote Position	Class 1 Category B	Remote Position Indication, Exercise/2 Years Exercise Full Stroke/Quarterly Operability Test	31
PXS-PL-V016A	Core Makeup Tank A Discharge Check	Check	Maintain Open Transfer Open Transfer Close	Active ~~Remote Position~~	Class 1 Category BC	~~Remote Position Indication, Exercise/2 Years~~ Check Exercise/Refueling Shutdown	10
PXS-PL-V016B	Core Makeup Tank B Discharge Check	Check	Maintain Open Transfer Open Transfer Close	Active ~~Remote Position~~	Class 1 Category BC	~~Remote Position Indication, Exercise/2 Years~~ Check Exercise/Refueling Shutdown	10

PXS-PL-V017A	Core Makeup Tank A Discharge Check	Check	Maintain Open Transfer Open Transfer Close	Active ~~Remote Position~~	Class 1 Category BC	~~Remote Position Indication, Exercise/2 Years~~ Check Exercise/Refueling Shutdown	10

Table 3.9-16 (Sheet 24 of 234)

VALVE INSERVICE TEST REQUIREMENTS

Valve Tag Number	Description[1]	Valve/Actuator Type	Safety-Related Missions	Safety Functions[2]	ASME Class/ IST Category	Inservice Testing Type and Frequency	IST Notes
WLS-PL-V072C	PXS B Compartment to Sump	Check	Maintain Close Transfer Close	Active	Class 3 Category BC	Check Exercise/Refueling Shutdown	26

Notes:

1. Acronyms:

ADS	automatic depressurization system
CAS	compressed and instrument air system
CCS	component cooling water system
CVS	chemical and volume control system
DWS	demineralized water transfer and storage system
FPS	fire protection system
IRC	inside reactor containment
IRWST	in-containment refueling water storage tank
MSS	main steam system
MTS	main turbine system
ORC	outside reactor containment
PCCWST	passive containment cooling water storage tank
PCS	passive containment cooling system
PSS	primary sampling system
PWS	potable water system
PXS	passive core cooling system
RCS	reactor coolant system
RNS	normal residual heat removal system
SDS	sanitary drain system
SFS	spent fuel pool cooling system
SGS	steam generator system
VBS	nuclear island nonradioactive ventilation system
VES	main control room emergency habitability system
VFS	containment air filtration system
VWS	central chilled water system
WLS	liquid radwaste system
AO	air operated
MO	motor operated
SO	solenoid operated

2. Valves listed as having an active or an active-to-failed safety-related function provide the safety-related valve transfer capabilities identified in the safety-related mission column. Valves having an active-to-failed function will transfer to the position identified in the safety-related mission column on loss of motive power. Valves with an active-to-failed function shall be tested by observing the operation of the actuator upon loss of valve actuating power. This "fail-safe" requirement is not otherwise shown and is performed during exercise testing.

3. This note applies to the ADS stage 1/2/3 valves (RCS-V001A/B, V002A/B, V003A/B, V011A/B, V012A/B, V013A/B). These valves are normally closed to maintain the RCS pressure boundary. These valves have a safety-related function to open following LOCAs to allow safety injection from lower pressure water supplies (accumulators and IRWST). These valves also have beyond design basis functions to depressurize the RCS. These valves have the same design pressure as the RCS and are AP1000 equipment class A. Downstream of the second valve is a lower design pressure and is equipment class C. The discharge of these valves is open to the containment through the IRWST.

   Both ADS valves in each line are normally closed during normal reactor operation in accordance with 10 CFR 50.2 and ANS/ANSI 51.1. If one of these valves is opened, for example for testing, the RCS pressure boundary is not maintained in accordance with the criteria contained in these two documents. In addition, the ADS valve configuration is similar to the normal residual heat removal system suction valve configuration. Even though the RNS suction valve configuration includes a third valve in the high pressure portion of the line, and the first two RNS valves have safety-related functions to transfer closed, they are not stroke tested during normal reactor operation to avoid a plant configuration where the mispositioning of one valve would cause a LOCA. Note 15 describes the justification for testing the RNS valves during cold shutdown.

   These ADS valves are tested during cold shutdowns when the RCS pressure is reduced to atmospheric pressure so that mispositioning of a single valve during this IST will not cause a LOCA. ~~Testing these valves every cold shutdown is consistent with the AP1000 PRA which assumes more than 2 cold or refueling shutdowns per year.~~

4. This note applies to the reactor vessel head vent solenoid valves (RCS-V150A/B/C/D). Exercise testing of these valves at power represents a risk of loss of reactor coolant and depressurization of the RCS if the proper test sequence is not followed. Such testing may also result in the valves developing through seal leaks. Exercise testing of these valves will be performed at cold shutdown.

5. This note applies to squib valves in the RCS and the PXS. The squib valve charge is removed and test fired outside of valve. Squib valves are not exercised for inservice testing. Their position indication sensors will be tested by local inspection.

6. This note applies to the CVS isolation valves (CVS-V001, V002, V003, V080, V081, V082). Closing these valves at power will result in an undesirable temperature transient on the RCS due to the interruption of purification flow. Therefore, quarterly exercise testing will not be performed. Exercise testing will be performed at cold shutdown.

7. This note applies to the pressurizer safety valves (RCS-V005A/B) and to the main steam safety valves (SGS-V030A/B, V031A/B, V032A/B, V033A/B, V034A/B and V035A/B). Since these valves are not exercised for inservice testing, their position indication sensors are tested by local inspection without valve exercise.

8. This note applies to CVS valve (CVS-V081). The safety functions are satisfied by the check valve function of the valve.

9. This note applies to the PXS accumulator check valves (PXS-V028A/B, V029A/B). To exercise these valves, flow must be provided through these valves to the RCS. These valves are not exercised during power operations because the accumulators cannot provide flow to the RCS since they are at a lower pressure. In addition, providing flow to the RCS during power operation would cause undesirable thermal transients on the RCS. During cold shutdowns, a full flow stroke test is impractical because of the potential of adding significant water to the RCS, and lifting the RNS relief valve. There is also a risk of injecting nitrogen into the RCS. A partial stroke test is practical during longer cold shutdowns (≥48 hours in Mode 5). In this test, flow is provided from

Table 3.11-1 (Sheet 21 of 50)

ENVIRONMENTALLY QUALIFIED ELECTRICAL AND MECHANICAL EQUIPMENT

Description	AP1000 Tag No.	Envir. Zone (Note 2)	Function (Note 1)	Operating Time Required (Note 5)	Qualification Program (Note 6)
Containment Isolation – Liquid Sample Line	PSS-PL-V011	6	ESF	2 wks	M S **
Limit Switch	PSS-PL-V011-L	6	PAMS	2 wks	E **
Solenoid Valve	PSS-PL-V011-S	6	ESF	5 min	E **
Containment Isolation - Sample Return Line	PSS-PL-V023	6	ESF	2 wks	M S **
Limit Switch	PSS-PL-V023-L	6	PAMS	2 wks	E **
Solenoid Valve	PSS-PL-V023-S	6	ESF	5 min	E **
Containment Isolation Sample Return	PSS-PL-V024	1	ESF	4 mos	M *
Containment Isolation - Air Sample Line	PSS-PL-V046	6	ESF	2 wks	M S **
Limit Switch	PSS-PL-V046-L	6	PAMS	2 wks	E **
Solenoid Valve	PSS-PL-V046-S	6	ESF	2 wks	E **
PWS MCR Isolation	PWS-PL-V418	3	ISOL	5 min	M
PWS MCR Isolation	PWS-PL-V420	3	ISOL	5 min	M
PWS MCR Vacuum Breaker	PWS-PL-V498	3	ISOL	5 min	M
Core Makeup Tank A Discharge Isolation	PXS-PL-V014A	1	ESF	5 min	M *
Limit Switch	PXS-PL-V014A-L	1	PAMS	1 yr	E *
Solenoid Valve	PXS-PL-V014A-S1	1	ESF	5 min	E *
Core Makeup Tank B Discharge Isolation	PXS-PL-V014B	1	ESF	5 min	M *
Limit Switch	PXS-PL-V014B-L	1	PAMS	1 yr	E *
Solenoid Valve	PXS-PL-V014B-S1	1	ESF	5 min	E *
Core Makeup Tank A Discharge Isolation	PXS-PL-V015A	1	ESF	5 min	M *
Limit Switch	PXS-PL-V015A-L	1	PAMS	1 yr	E *
Solenoid Valve	PXS-PL-V015A-S1	1	ESF	5 min	E *
Core Makeup Tank B Discharge Isolation	PXS-PL-V015B	1	ESF	5 min	M *
Limit Switch	PXS-PL-V015B-L	1	PAMS	1 yr	E *
Solenoid Valve	PXS-PL-V015B-S1	1	ESF	5 min	E *
Core Makeup Tank A Discharge	PXS-PL-V016A	1	ESF	5 min	M *
Core Makeup Tank B Discharge	PXS-PL-V016B	1	ESF	5 min	M *
Core Makeup Tank A Discharge	PXS-PL-V017A	1	ESF	5 min	M *
Core Makeup Tank B Discharge	PXS-PL-V017B	1	ESF	5 min	M *
Accumulator A Pressure Relief	PXS-PL-V022A	1	ESF	5 min	M *
Accumulator B Pressure Relief	PXS-PL-V022B	1	ESF	5 min	M *

Table 3.11-1 (Sheet 33 of 50)

ENVIRONMENTALLY QUALIFIED ELECTRICAL AND MECHANICAL EQUIPMENT

Description	AP1000 Tag No.	Envir. Zone (Note 2)	Function (Note 1)	Operating Time Required (Note 5)	Qualification Program (Note 6)
PCCWST Isolation Valve Leakage Detection Crossconn	PCS-PL-V030	9	PB	1 yr	M
PCCWST Level Instrument Root Valve	PCS-PL-V031A	9	PB	1 yr	M
PCCWST Level Instrument Root Valve	PCS-PL-V031B	9	PB	1 yr	M
Recirculation Pump Suction from Long Term Makeup Isolation Valve	PCS-PL-V033	10	ESF	2 wks	M *
Spent Fuel Pool Emergency Makeup Isolation	PCS-PL-V052	7	PB	1 yr	M
Hot Leg 1 Sample Isolation Limit Switch	PSS-PL-V001A PSS-PL-V001A-L	1 1	PB PAMS	1 yr 1 yr	M * E *
Hot Leg 2 Sample Isolation Limit Switch	PSS-PL-V001B PSS-PL-V001B-L	1 1	PB PAMS	1 yr 1 yr	M * E *
Pressurizer Sample Isolation	PSS-PL-V003	1	PB	1 yr	M *
PXS Accumulator Sample Isolation	PSS-PL-V004A	1	PB	1 yr	M *
PXS Accumulator Sample Isolation	PSS-PL-V004B	1	PB	1 yr	M *
PXS CMT A Sample Isolation	PSS-PL-V005A	1	PB	1 yr	M *
PXS CMT B Sample Isolation	PSS-PL-V005B	1	PB	1 yr	M *
PXS CMT A Sample Isolation	PSS-PL-V005C	1	PB	1 yr	M *
PXS CMT B Sample Isolation	PSS-PL-V005D	1	PB	1 yr	M *
Liquid Sample Check Valve	PSS-PL-V012A	1	PB	1 yr	M *
Liquid Sample Check Valve	PSS-PL-V012B	1	PB	1 yr	M *
Containment Testing Boundary Isolation Valve	PSS-PL-V076A	1	PB	1 yr	M *
Containment Testing Boundary Isolation Valve	PSS-PL-V076B	1	PB	1 yr	M *
Containment Isolation Test	PSS-PL-V082	1	PB	1 yr	M *
Connection Isolation Valve					
Containment Isolation Test	PSS-PL-V083	1	PB	1 yr	M *
Connection Isolation Valve					
Containment Isolation Test	PSS-PL-V085	1	PB	1 yr	M *
Connection Isolation Valve					
Containment Isolation Test	PSS-PL-V086	1	PB	1 yr	M *
Connection Isolation Valve					
~~MCR Potable Water Inlet Check Valve~~	~~PWS-PL-V418~~	~~3~~	~~PB~~	~~1 y~~	~~M~~

Table 3I.6-3 (Sheet 5 of 3~~2~~1)

LIST OF AP1000 SAFETY-RELATED ELECTRICAL AND MECHANICAL EQUIPMENT NOT HIGH FREQUENCY SENSITIVE

Description	AP1000 Tag Number	Comment
PCCWST Recirculation Return Isolation Valve	PCS-PL-V046	2
Emergency Makeup to the Spent Fuel Pool Drain Isolation Valve	PCS-PL-V049	2
Spent Fuel Pool Long Term Makeup Isolation Valve	PCS-PL-V050	2
Spent Fuel Pool Emergency Makeup Lower Isolation Valve	PCS-PL-V051	2
Containment Isolation – Air Sample Line	PSS-PL-V008	2
Containment Isolation – Liquid Sample Line	PSS-PL-V010A	2
Containment Isolation – Liquid Sample Line	PSS-PL-V010B	2
Containment Isolation – Liquid Sample Line	PSS-PL-V011	2
Containment Isolation – Sample Return Line	PSS-PL-V023	2
Containment Isolation Sample Return	PSS-PL-V024	2
Containment Isolation – Air Sample Line	PSS-PL-V046	2
PWS MCR Isolation	PWS-PL-V4~~20~~18	2
PWS MCR Isolation	PWS-PL-V420	2
PWS MCR Vacuum Breaker	PWS-PL-V498	2
Core Makeup Tank A Discharge Isolation	PXS-PL-V014A	2
Core Makeup Tank B Discharge Isolation	PXS-PL-V014B	2
Core Makeup Tank A Discharge Isolation	PXS-PL-V015A	2
Core Makeup Tank B Discharge Isolation	PXS-PL-V015B	2
Core Makeup Tank A Discharge	PXS-PL-V016A	2
Core Makeup Tank B Discharge	PXS-PL-V016B	2
Core Makeup Tank A Discharge	PXS-PL-V017A	2
Core Makeup Tank B Discharge	PXS-PL-V017B	2
Accumulator A Pressure Relief	PXS-PL-V022A	2
Accumulator B Pressure Relief	PXS-PL-V022B	2
Accumulator A Discharge	PXS-PL-V028A	2

Table 3I.6-3 (Sheet 14 of 3~~2~~1)

LIST OF AP1000 SAFETY-RELATED ELECTRICAL AND MECHANICAL EQUIPMENT NOT HIGH FREQUENCY SENSITIVE

Description	AP1000 Tag Number	Comment
Containment Isolation Test Connection Isolation Valve	PSS-PL-V086	2
~~MCR Potable Water Inlet Check Valve~~	~~PWS-PL-V418~~	~~2~~
Core Makeup Tank A CL Inlet Isolation	PXS-PL-V002A	2
Core Makeup Tank B CL Inlet Isolation	PXS-PL-V002B	2
Core Makeup Tank A Upper Sample	PXS-PL-V010A	2
Core Makeup Tank B Upper Sample	PXS-PL-V010B	2
Core Makeup Tank A Lower Sample	PXS-PL-V011A	2
Core Makeup Tank B Lower Sample	PXS-PL-V011B	2
Core Makeup Tank A Drain	PXS-PL-V012A	2
Core Makeup Tank B Drain	PXS-PL-V012B	2
Core Makeup Tank Discharge Manual Isolation	PXS-PL-V013A	2
Core Makeup Tank B Discharge Manual Isolation	PXS-PL-V013B	2
Accumulator A N_2 Vent	PXS-PL-V021A	2
Accumulator B N_2 Vent	PXS-PL-V021B	2
Accumulator A PZR Transmitter Isolation	PXS-PL-V023A	2
Accumulator B PZR Transmitter Isolation	PXS-PL-V023B	2
Accumulator A PZR Transmitter Isolation	PXS-PL-V024A	2
Accumulator B PZR Transmitter Isolation	PXS-PL-V024B	2
Accumulator A Sample	PXS-PL-V025A	2
Accumulator B Sample	PXS-PL-V025B	2
Accumulator A Drain	PXS-PL-V026A	2
Accumulator B Drain	PXS-PL-V026B	2
Accumulator A Discharge Isolation	PXS-PL-V027A	2
Accumulator B Discharge Isolation	PXS-PL-V027B	2

9.2.4.5 Tests and Inspections

Proper system performance and integrity during normal plant operation are confirmed by system operation and visual inspections.

Grab samples may be taken from the demineralized water storage tank or the condensate storage tank to verify water chemistry is maintained within acceptable limits. Grab samples are taken to the secondary sampling laboratory for analysis. Water chemistry specifications for demineralized water supplied to the demineralized water transfer and storage system are described in subsection 9.2.3.

9.2.4.6 Instrumentation Applications

Water level is measured and automatically controlled and alarmed in the demineralized water and condensate storage tanks.

Instrumentation is provided to control the recirculation and distribution of demineralized water from the storage tank through the pumps and to the supply header and condensate storage tank. Controls are provided for automatic starting of the demineralized water transfer and storage system pumps.

An oxygen analyzer signal starts and stops the condensate storage tank catalytic oxygen reduction unit pump on low and high oxygen levels.

Monitoring of instrumentation is performed through the data display and processing system. Control functions are performed by the plant control system. Appropriate alarms and displays are available in the control room. Local indication, display and manual control are available in portable displays which may be connected to the data display and processing system. See Chapter 7.

9.2.5 Potable Water System

9.2.5.1 Design Basis

The potable water system (PWS) is designed to furnish water for domestic use and human consumption. It complies with the following standards:

- Bacteriological and chemical quality requirements as referenced in EPA "National Primary Drinking Water Standards," 40 CFR Part 141.
- The distribution of water by the system is in compliance with 29 CFR 1910, Occupational Safety and Health Standards, Part 141.

9.2.5.1.1 Safety Design Basis

The potable water system serves no safety-related function other than main control room (MCR) isolation and, therefore, has no nuclear safety design basis, except for MCR isolation.

Change Number 5

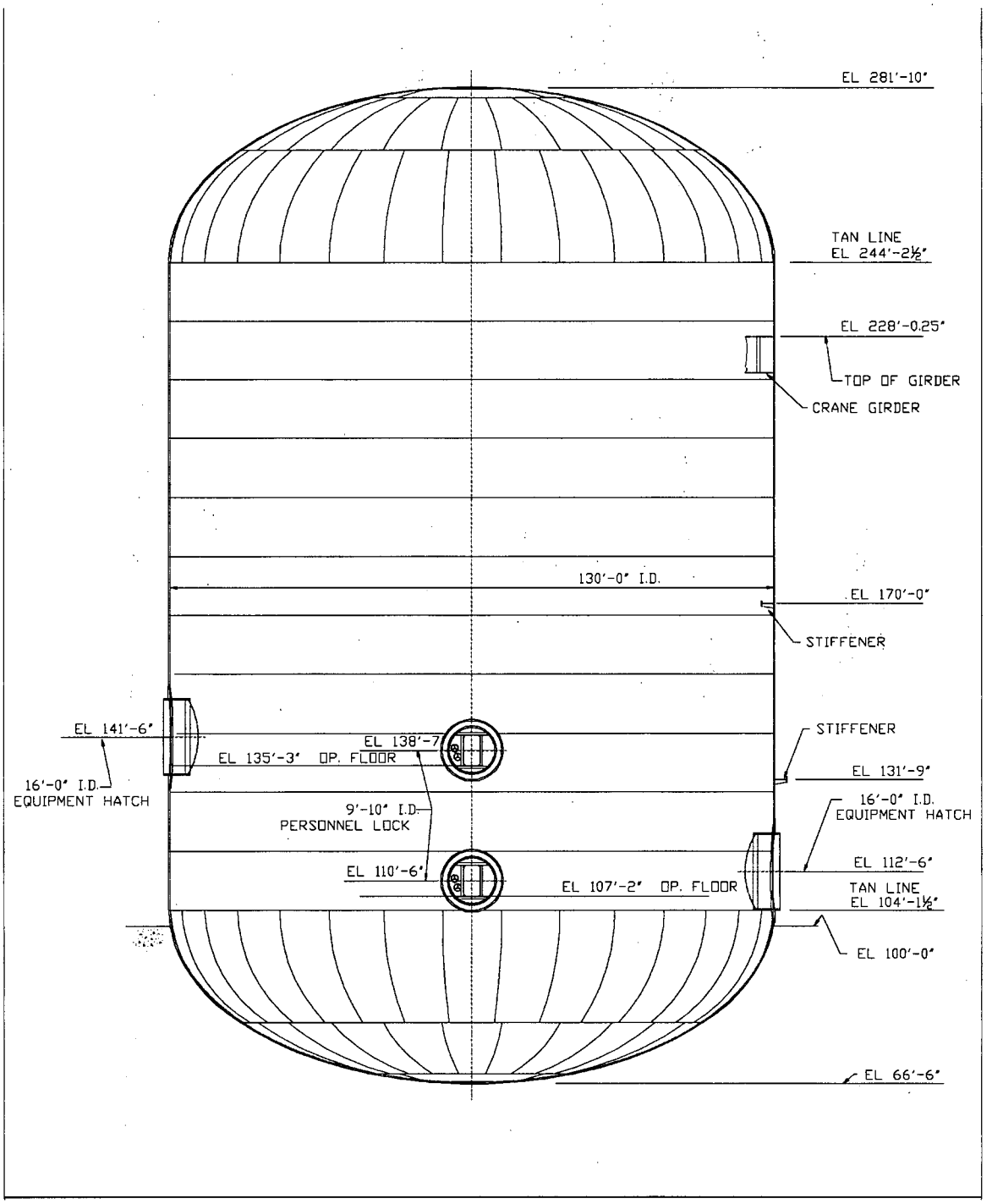

Figure 3.8.2-1 (Sheet 1 of 3)

Containment Vessel General Outline

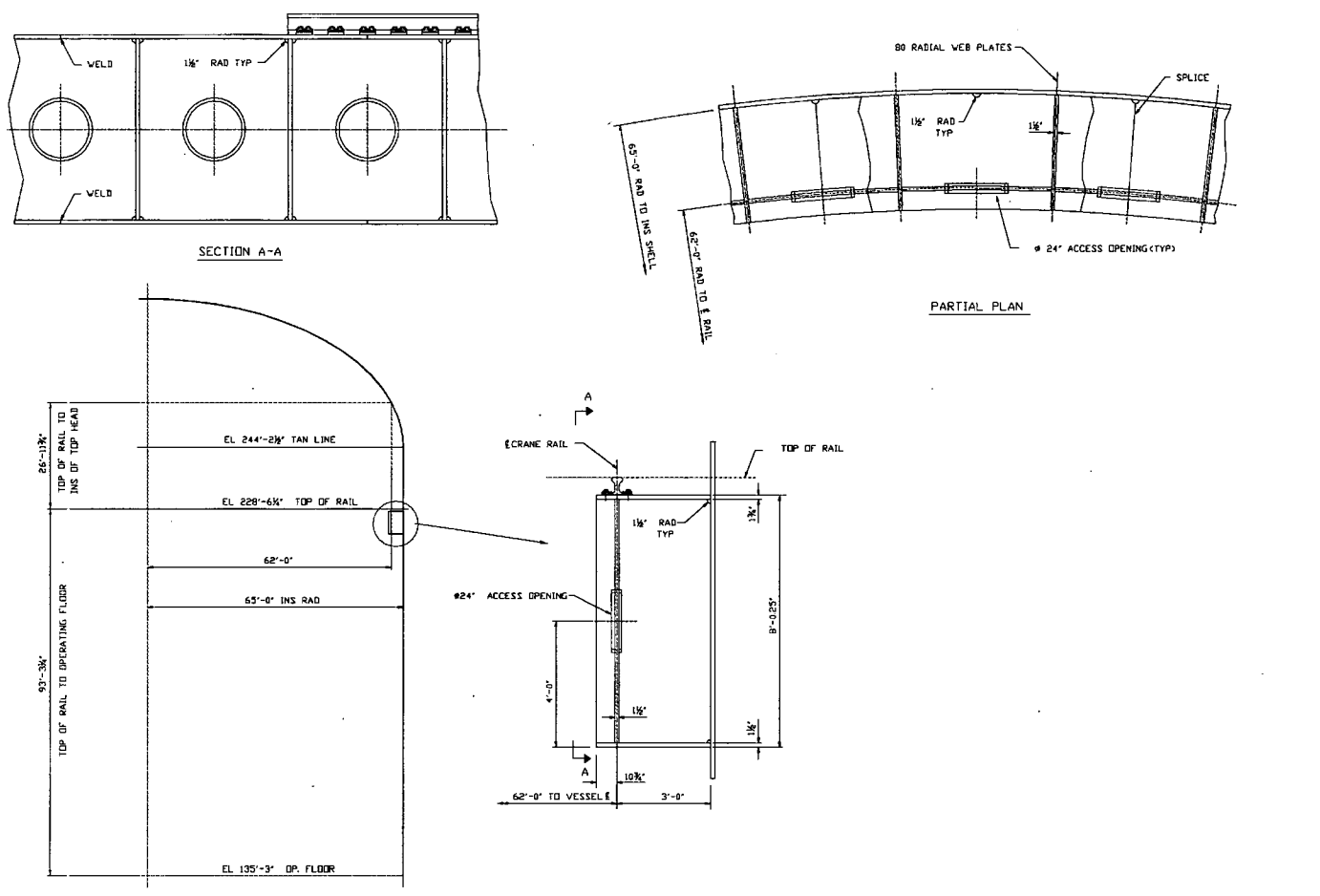

Figure 3.8.2-1 (Sheet 3 of 3)

Containment Vessel General Outline

Change Number 6

Since a limited supply of fire water is provided, inadvertent initiation of the fire protection system can not exceed the flooding levels described above. Operator action to stop inadvertent water flow from the fire protection system is expected to limit flooding to only a small fraction of this water supply.

Structural walls, drain line routing, and raised platforms prevent leakage that may occur in piping or mechanical areas on levels 4 and 5 from propagating to the electrical areas on levels 1, 2, 3, or 4.

Dual sump pumps and water level sensors are also provided in the sump on level 1. The level sensors transmit water level indication to the main control room and the plant control system. Level alarms alert the operator to take corrective action.

The sump pumps are sized to remove approximately 250 gpm (with two pumps operating) based on a maximum flow from two fire hose stations of 250 gpm. The discharge of these pumps is directed to the turbine building drain tank of the waste water system (WWS) located on elevation 89′-0″ of the turbine building as described in subsection 9.2.9. The discharge line into the tank is provided with a standpipe to prevent siphoning back to the auxiliary building nonradiologically controlled area sump. These sump pumps and level sensors are not required to maintain safe shutdown capability.

- **Radiologically Controlled Area**

There are no safe shutdown components located on level 1 of the radiologically controlled area. The radiologically controlled area of the auxiliary building is subject to flooding from a variety of potential sources including the component cooling water, central chilled water, hot water, spent fuel pool cooling, normal residual heat removal system, and chemical and volume control system, as well as various tanks. Most of the piping associated with these systems is above level 1; however, the flow from any postulated rupture in the radiologically controlled area will eventually flood level 1. The principal flow paths to level 1 are the vertical pipe chase and the floor gratings provided in the elevator lobbies on levels 2 and 3. Other flow paths include the floor drain system, the stairwell, and the elevator shaft.

The auxiliary building radiologically controlled area sump is located on level 1 with dual sump pumps and water level sensor provided in the sump. The level sensor transmits water level indication to the main control room and the plant control system. High level alarms alert the operator to take corrective action.

The sump pumps are sized to remove approximately 250 gpm (with two pumps operating) based on a maximum flow from two fire hose stations of 250 gpm. The discharge of these pumps is directed to the waste holdup tanks of the liquid radioactive waste system as described in subsection 11.2. These sump pumps and level sensor are not required to maintain safe shutdown capability.

For the component cooling water and central chilled water systems, the maximum flooding volume is bounded by the system volume plus a reasonable period of makeup. This includes any discharges from the pressure relief valves on the cooling water lines to the RNS heat exchangers. Flow from these two valves is also directed to the auxiliary building sump

through the WWS. For the spent fuel pool cooling system, the maximum flooding volume is limited to the volume of water above the spent fuel pool strainer plus a reasonable period of makeup. This flooding volume is approximately equal to that of the component cooling water and chilled water systems above.

The normal residual heat removal system is operated only when the plant is shutdown. Since it is not normally operating, it is evaluated as a moderate-energy system. Flooding is determined based on the maximum flow rate from a through-wall crack in an 8 inch normal residual heat removal system discharge line. Assuming that the leakage is detected and isolated within 30 minutes after initiation, the maximum flooding volume is approximately equal to those above.

Flooding due to a break in the high-energy chemical and volume control system makeup pump discharge line is bounded by the normal residual heat removal system through-wall crack.

Flow from the postulated break spreads throughout the level 1 rooms and corridor via flow under doors and interconnecting floor drains if the auxiliary building radiologically controlled area sump pumps are inoperable. The maximum flood level in the area, for any of the cases above, is less than 12 inches. This flooding has no impact on safe shutdown since there are no components on level 1 required for safe shutdown.

Normal residual heat removal systems components with systems important missions are expected to remain functional following the flooding event since the pump motors and valve operators are above the maximum flood level if the flood source is not a break in the normal residual heat removal system piping itself.

Flow from a tank rupture in one of the tank rooms will initially flood the tank room, and begin to flow to the auxiliary building radiologically controlled area sump via floor drains. If the sump pumps are inoperable, the tank volume floods the balance of level 1 via the interconnecting floor drains. The maximum flood level for this event is less than for the piping failures discussed above.

Auxiliary Building Level 2 (Elevation 82′-6″)

- **Nonradiologically Controlled Area**

  Level 2 of the nonradiologically controlled area has two Class 1E battery rooms, four divisional Class 1E dc electrical equipment rooms, and one Class 1E reactor coolant pump trip switchgear room. The doors to these rooms are not water tight.

  Level 2 contains an arrangement of fire protection and potable water piping similar to level 1.

  The potential for flooding on this level is limited to fire fighting activities. Fire fighting in these rooms is accomplished by manual means from two fire hose stations located adjacent to the two stairwells. The maximum flowrate to this area from the two hose stations is assumed to be 250 gpm.

can be aligned with either component cooling water pump allowing one heat exchanger to be out of service during normal plant operation.

The component cooling water heat exchangers are plate type heat exchangers. Component cooling water circulates through one side of the heat exchanger while service water circulates through the other side. Component cooling water in the heat exchanger is maintained at a higher pressure than the service water to prevent leakage of service water into the system.

9.2.2.3.3 Component Cooling Water Surge Tank

The component cooling water system has a single surge tank. The surge tank accommodates changes in component cooling water volume due to changes in operating temperature. The tank is designed to accommodate a 50 gallons per minute leakage into or out of the system for 30 minutes before any operator action is required.

The tank is a cylindrical, vertical unit constructed of carbon steel.

9.2.2.3.4 Component Cooling Water System Valves

Most of the valves in the component cooling water system are manual valves used to isolate cooling flow from components for which cooling is not required in a given plant operating mode.

Three motor operated isolations valves and a check valve provide containment isolation for the supply and return component cooling water system lines that penetrate the containment barrier. The motor-operated valves are normally open and are closed upon receipt of a safety injection signal. They are controlled from the main control room and fail as-is.

An air-operated isolation valve is located in the component cooling water discharge line from each reactor coolant pump. These valves, which are normally open, are closed on generation of a close signal by the plant control system. The close signal is produced when there are flow deviations detected simultaneously in the reactor coolant pump CCS cooling supply and return lines that are indicative of a leak from the pump external heat exchanger to the CCS. Closing these valves prevents radioactive reactor coolant flow through the component cooling water system.

Relief valves are provided in the cooling water outlet line from each reactor coolant pump. These valves are sized to protect the pump motor cooling jacket (design pressure 200 psig) and the component cooling water piping in the event of a tube rupture in the reactor coolant pump external heat exchanger. Relief valves in the cooling water outlet lines from each normal residual heat exchanger also protect the RNS heat exchanger shell and component cooling water piping in the event of a tube rupture that occurs while the heat exchanger is isolated from the CCS. These relief valves also provide thermal relief for an isolated RNS heat exchanger. A relief valve in the cooling water outlet line from the letdown heat exchanger also protects the component cooling water piping in the event of a tube rupture in the heat exchanger. Small relief valves are included in the cooling water outlet line from the other components to relieve the volumetric expansion which occurs if the cooling water lines to the component are isolated and the water temperature rises.

water system. Simultaneous flow deviations in both the inlet and outlet lines will generate a signal to close the valve on the cooling water outlet line on each reactor coolant pump to prevent reactor coolant flow throughout the component cooling water system. Both the flow signals and the isolation valves are non-safety-related. If the valve on the reactor coolant pump cooling water outlet line does not close, reactor coolant leakage from the pump can be retained inside containment by closing the safety-related component cooling water containment isolation valves. These valves can be closed manually by the operator after being alerted to a reactor coolant pump leak by alarms from component cooling water system instrumentation (surge tank level and/or radiation level in the CCS pump suction header) or from the flow instruments located on the inlet and outlet lines from the leaking reactor coolant pump external heat exchanger. Closure of one CCS outlet isolation valve will result in a high bearing water temperature trip of the plant if the affected reactor coolant pump continues to operate.

A safety injection signal results if sufficient reactor coolant system inventory is lost through the leak. This signal will trip the reactor coolant pumps and automatically close the component cooling water containment isolation valves to prevent reactor coolant leakage outside containment. Overpressure protection of the reactor coolant pump motor cooling jacket and the component cooling water piping subjected to the reactor coolant system pressure is provided by means of a relief valve on the cooling water outlet piping downstream of the reactor coolant pump external heat exchanger.

The operator is alerted to a large leak from the letdown heat exchanger by a high surge tank level or a high radiation alarm in the absence of a signal from one or both of the reactor coolant pump inlet or outlet flow sensors indicating reactor coolant leakage from a reactor coolant pump external heat exchanger to the component cooling water system. The operator can isolate the reactor coolant flow to the letdown heat exchanger from the main control room by closing the letdown flow isolation valve in the chemical and volume control system. Overpressure protection for the component cooling water system in the case of a letdown heat exchanger tube rupture is provided by a relief valve in the component cooling water system piping near the heat exchanger outlet.

During a normal plant cooldown a normal residual heat removal heat exchanger tube leak or rupture could result in reactor coolant leakage into the component cooling water system. A check of the local flow measurements in the normal residual heat removal heat exchanger cooling water outlet lines will indicate the leaking heat exchanger. High surge tank level and/or high radiation level in the CCS pump suction header would also confirm this condition. Reactor coolant flow to the faulty heat exchanger can be isolated by closing valves in the normal residual heat removal system. If the RNS heat exchanger is isolated from the remainder of the CCS, overpressure protection for the component cooling water system and RNS heat exchanger shell in the case of a normal residual heat exchanger tube rupture is provided by a relief valve in the component cooling water system piping near each heat exchanger outlet.

9.2.2.4.5.3 Leakage from the Component Cooling Water System

Excessive leakage from the component cooling water system causes the water level in the component cooling water surge tank to drop and a low level alarm to be actuated. Makeup water is added automatically to the component cooling water system as required. After the leak is identified by visual inspection or by a change in individual component cooling water flow rate, the

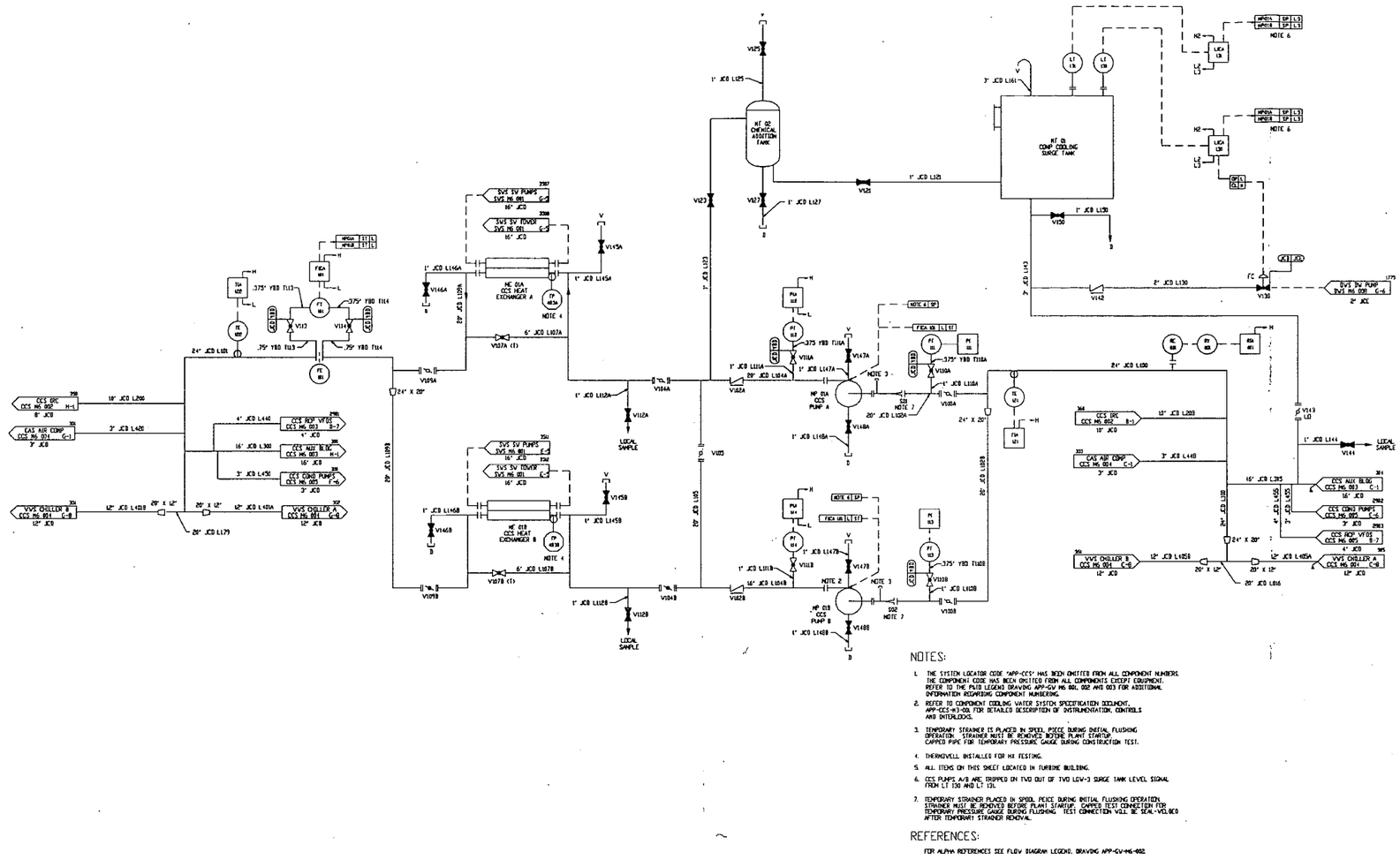

Inside Turbine Building

Figure 9.2.2-2 (Sheet 1 of 5)

Component Cooling Water System Piping and Instrumentation Diagram (REF CCS 001)

Figure represents system functional arrangement. Details internal to the system may differ as a result of implementation factors such as vendor-specific component requirements.

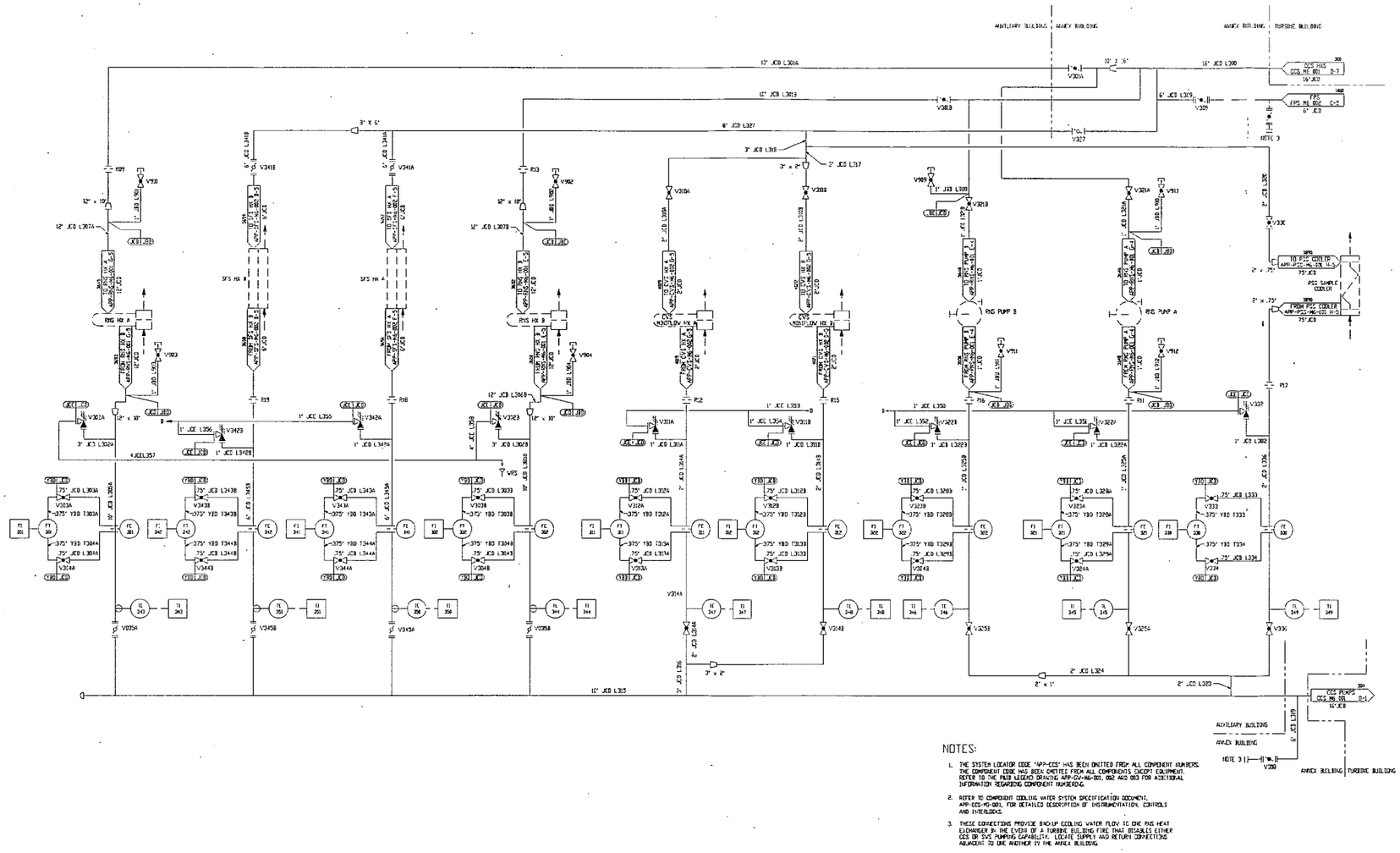

Figure 9.2.2-2 (Sheet 3 of 5)

Component Cooling Water System Piping and Instrumentation Diagram (REF) CCS 003

Figure represents system functional arrangement. Details internal to the system may differ as a result of implementation factors such as vendor-specific component requirements.

19E.2.4.2.6 Reactor Coolant System Isolation Valve

The RNS contains an isolation valve in the pump suction line from the RCS. This motor-operated containment isolation valve is designed to the RCS pressure. It provides an additional barrier between the RCS and lower pressure portions of the RNS.

19E.2.4.2.7 Normal Residual Heat Removal System Relief Valve

The inside containment RNS relief valve is connected to the residual heat removal pump suction line. This valve is designed to provide low-temperature, overpressure protection of the RCS as described in subsection 5.2.2. The valve, connected to the high-pressure portion of the pump suction line, reduces the risk of overpressurizing the low-pressure portions of the system.

19E.2.4.2.8 Features Preventing Inadvertent Opening of Isolation Valves

The RCS isolation valves are interlocked to prevent their opening at RCS pressures above 450 psig. Section 7.6 discusses this interlock. The power to these valves is administratively blocked during normal power operation.

In addition, these valves are interlocked with the RNS/IRWST isolation valves to prevent their opening with the RNS open to the IRWST. This precludes the blowdown of the RCS to the IRWST through the RNS upon system initiation.

19E.2.4.2.9 RCS Pressure Indication and High Alarm

The AP1000 RNS contains an instrumentation channel that indicates pressure in each normal residual heat removal pump suction line. A high-pressure alarm is provided in the main control room to alert the operator to a condition of rising RCS pressure that could eventually exceed the design pressure of the RNS.

19E.2.5 Component Cooling and Service Water Systems

~~The AP1000 service water system and component cooling water system are described in subsections 9.2.1 and 9.2.2 respectively.~~

Two different means are provided to protect the lower-pressure CCS from overpressure if RNS heat exchanger tube leakage occurs during plant cooldown or shutdown operations.

A relief valve is located on the CCS cooling water line, inside the upstream and downstream manual isolation valves for each RNS heat exchanger. The valve satisfies requirements in Section VIII of the ASME code for overpressure protection of heat transfer equipment. This relief valve provides both thermal overpressure and tube leakage protection in the event that the section of piping containing the RNS heat exchanger is isolated from the remainder of the CCS. The valve discharges directly into the auxiliary building sump.

If RNS heat exchanger tube leakage occurs with the affected heat exchanger not isolated from the CCS, the excess volume added to the CCS by the leak will begin to fill the CCS surge tank. If the CCS surge tank fills before the leak is isolated, fluid is discharged through the tank vent into the

turbine building sump to prevent over-pressurization of any portion of the CCS. Leakage into the system will produce a CCS liquid radiation monitor alarm, and an increase in CCS surge tank level that results in a tank high level alarm.

Doses from the RNS heat exchanger tube rupture event would be below those produced by the primary sample line break outside containment with the plant at power.

19E.2.6 Containment Systems

19E.2.6.1 System Description

The containment systems are described in Section 6.2.

19E.2.6.2 Design Features to Address Shutdown Safety

The AP1000 has addressed the issue of containment closure at shutdown and incorporated the following requirements in the Technical Specifications (Chapter 16). In shutdown Modes 3 and 4, containment status is the same as at-power. Specifically, containment integrity is required, the major equipment hatches are closed and sealed, and containment air locks and isolation valves are operable.

In Modes 5 and 6, containment closure capability is required during shutdown operations when there is fuel inside containment. Containment closure is required to maintain, within containment, the cooling water inventory. Due to the large volume of the IRWST and the reduced sensible heat during shutdown, the loss of some of the water inventory can be accepted. Further, accident analyses provided in Section 19E.4 of this appendix show that containment closure capability is not required to meet offsite dose requirements. Therefore, containment does not need to be leak-tight as required for Modes 1 through 4.

In Modes 5 and 6, there is no potential for steam release into the containment immediately following an accident. Pressurization of the containment could occur only after heatup of the IRWST due to PRHR HX operation (Mode 5 with RCS intact), after heatup of the RCS with direct venting to the containment (Mode 5 with reduced RCS inventory or Mode 6 with the refueling cavity not fully flooded), or after heatup of the RCS and refueling cavity (Mode 6 with refueling cavity fully flooded). To limit the magnitude of cooling water inventory losses and because local manual action may be required to achieve containment closure, the containment hatches, air locks, and penetrations must be closed prior to steaming into containment.

The containment equipment hatches, which are part of the containment pressure boundary, provide a means for moving large equipment and components into and out of containment. If closed, the equipment hatch is held in place by at least four bolts. If open, each equipment hatch can be closed using a dedicated set of hardware, tools, and equipment. A self-contained power source is provided to drive each hoist while lowering the hatch into position. Large equipment and components may be moved through the hatches as long as they can be removed and the hatch closed prior to steaming into the containment.

The containment air locks, which are also part of the containment pressure boundary, provide a means for personnel access during Modes 1, 2, 3, and 4 unit operation. Each air lock has a door at

Change Number 8

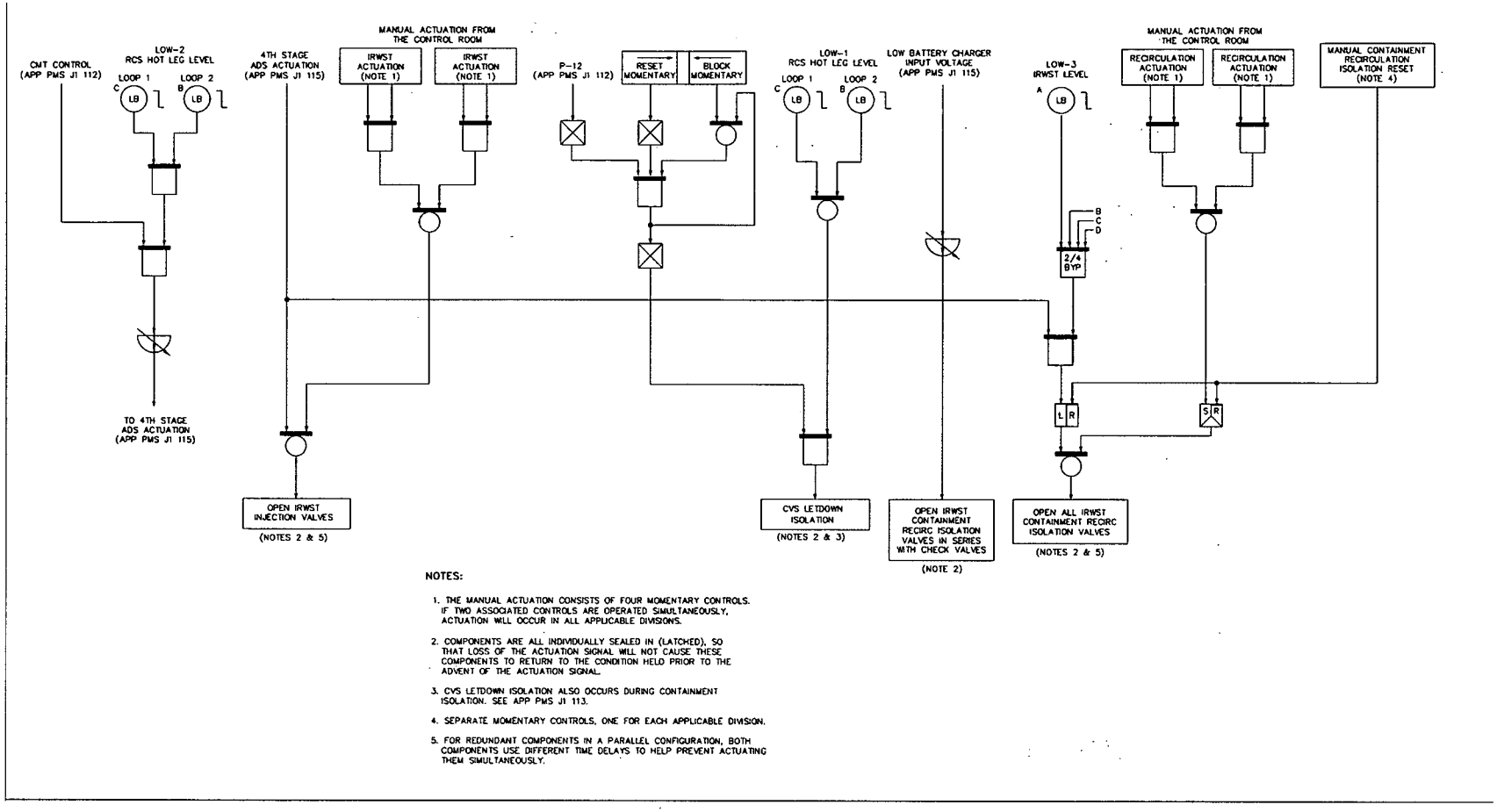

Figure 7.2-1 (Sheet 16 of 20)

Functional Diagram
In-Containment Refueling Water Storage Tank Actuations

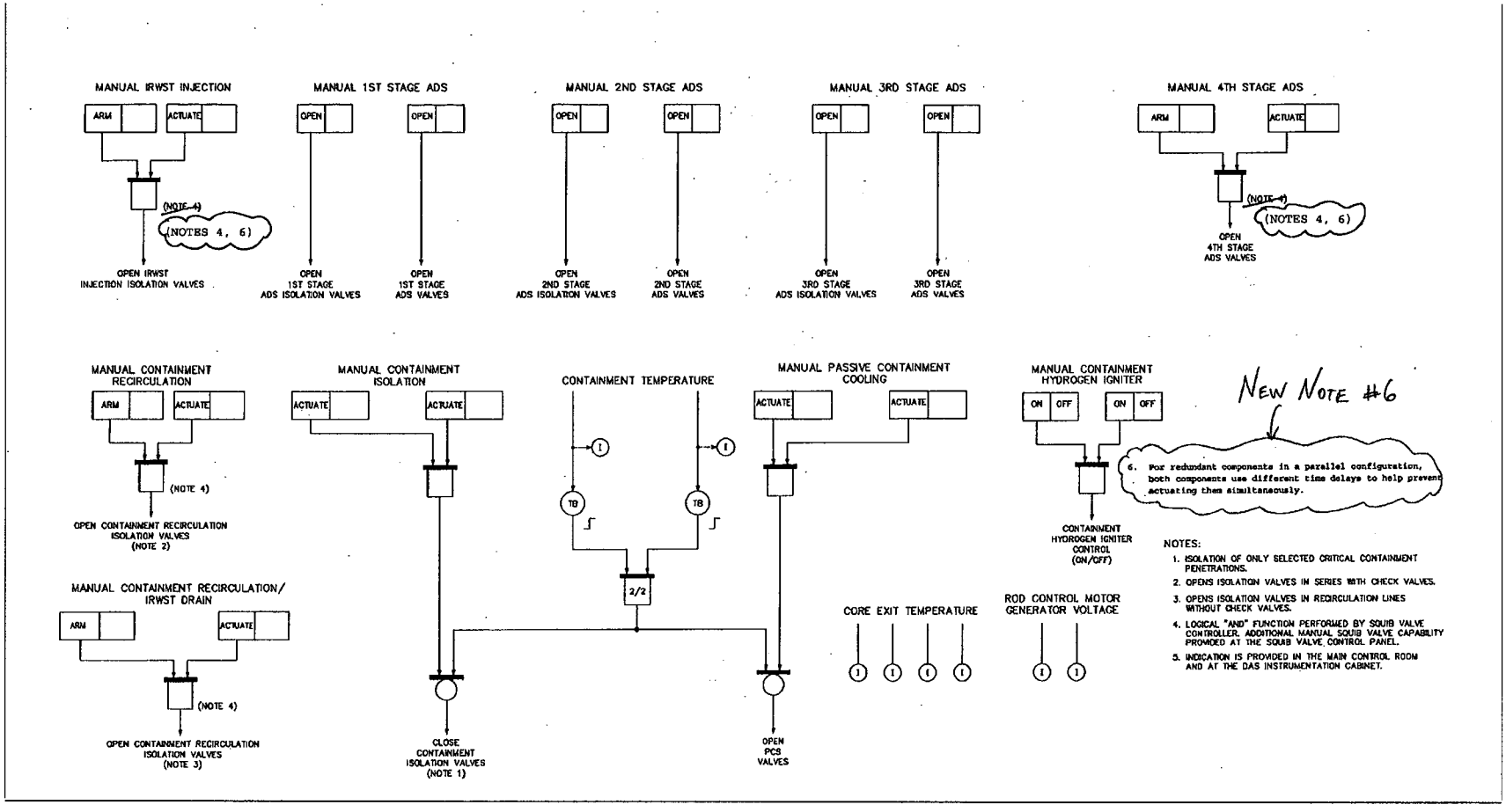

Figure 7.2-1 (Sheet 20 of 20)

Functional Diagram
Diverse Actuation System Logic, Manual Actuations

Change Number 9

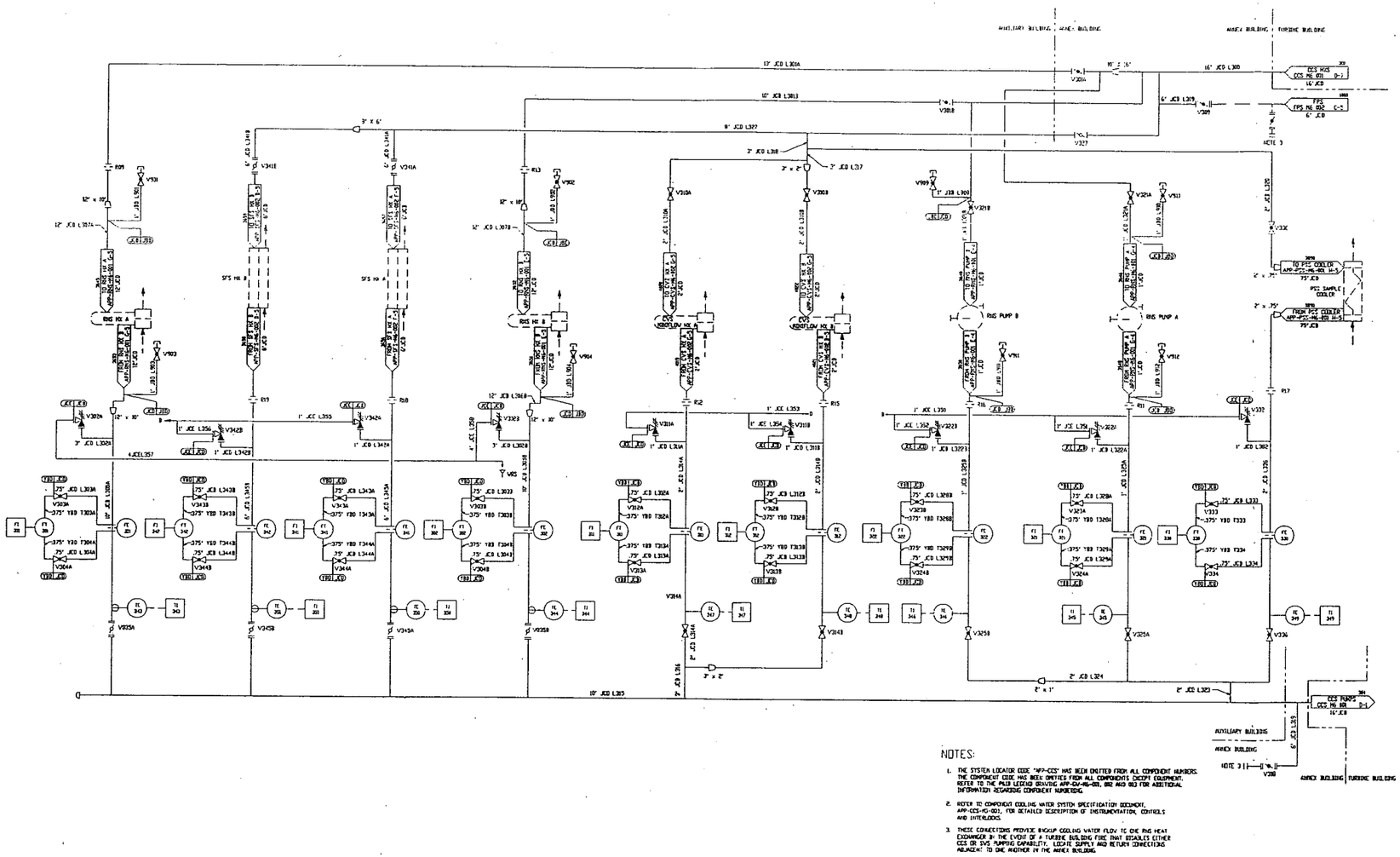

Figure 9.2.2-2 (Sheet 3 of 5)

Component Cooling Water System Piping and Instrumentation Diagram (REF) CCS 003

Figure represents system functional arrangement. Details internal to the system may differ as a result of implementation factors such as vendor-specific component requirements.

Change Number 14

Table 3.2-3 (Sheet 6 of ~~65~~68)

AP1000 CLASSIFICATION OF MECHANICAL AND FLUID SYSTEMS, COMPONENTS, AND EQUIPMENT

Tag Number	Description	AP1000 Class	Seismic Category	Principal Construction Code	Comments
Fuel Handling and Refueling System (Continued)					
FHS-FS-01	New Fuel Storage Rack	D	I	Manufacturer Std.	
FHS-FS-02	Spent Fuel Storage Rack	D	I	Manufacturer Std.	
FHS-FT-01	Fuel Transfer Tube	B	I	ASME III Class MC	Jurisdictional Boundary CV Only, Remaining Portion Optional
FHS-MT-01	Spent Fuel Pool	C	I	ACI 349	ACI 349 Evaluation of Structural Boundary Only
FHS-MT-02	Fuel Transfer Canal	C	I	ACI 349	ACI 349 Evaluation of Structural Boundary Only
FHS-MT-05	Spent Fuel Cask Loading Pit	C	I	ACI 349	ACI 349 Evaluation of Structural Boundary Only
FHS-MT-06	Spent Fuel Cask Washdown Pit	C	I	ACI 349	ACI 349 Evaluation of Structural Boundary Only
FHS-MY-Y01	Spent Fuel Transfer Gate	C	I	Manufacturer Std.	
FHS-MY-Y02	Spent Fuel Cask Loading Pit Gate	C	I	Manufacturer Std.	
FHS-PL-V001	Fuel transfer tube Isolation Valve	C	I	ASME-III-3	
FHS-PY-B01	Fuel Transfer Tube Blind Flange	B	I	ASME III-~~2~~ Class MC	
Balance of system components are Class E					
Fire Protection System (FPS)					Location: Various
FPS-PL-V050	Fire Water Containment Supply Isolation	B	I	ASME III-2	
FPS-PL-V051	Fire Water Containment Test Connection Isolation	B	I	ASME III-2	

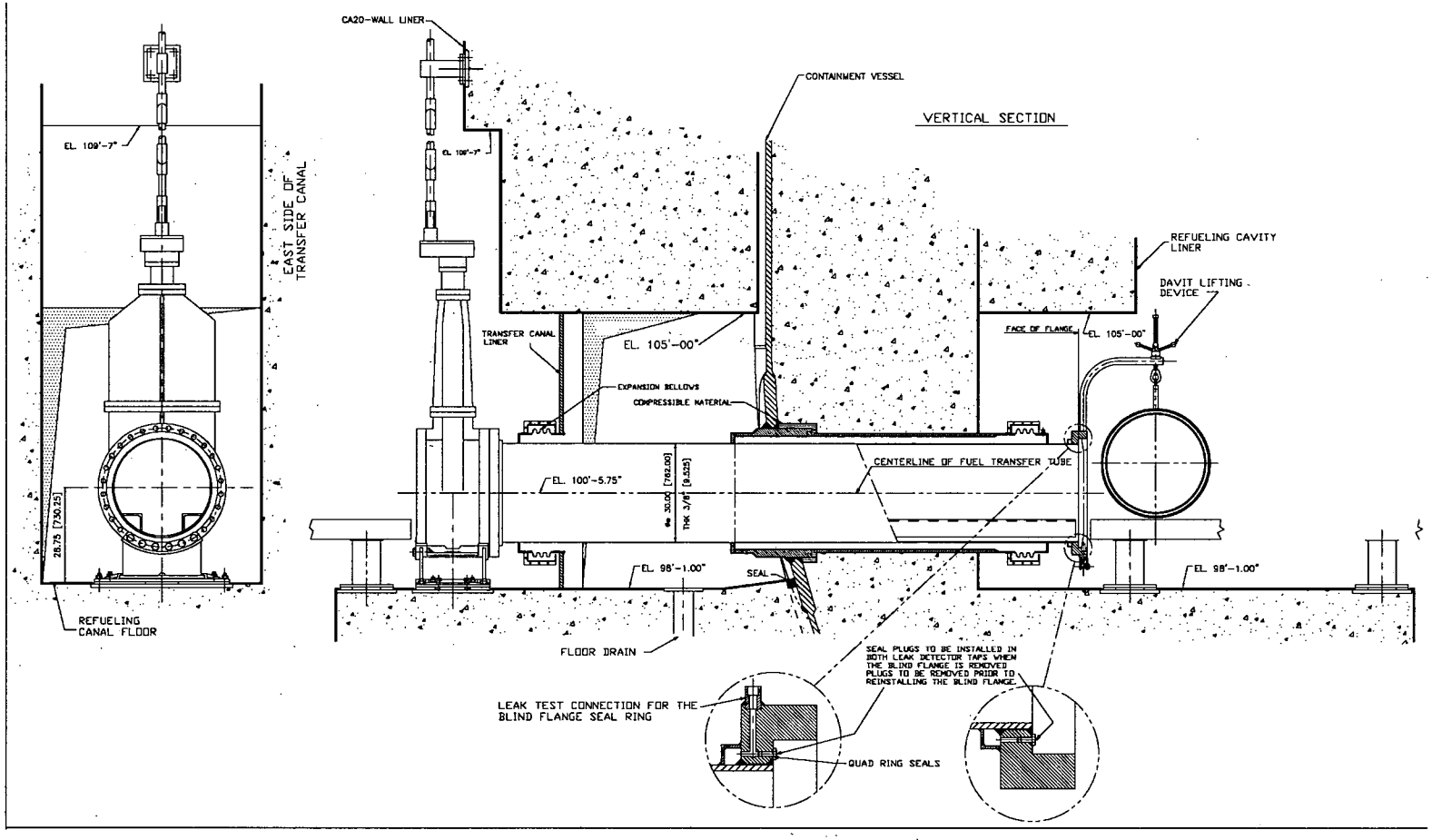

Figure 3.8.2-4 (Sheet 5 of 6)

Containment Penetrations
Fuel Transfer Penetration

Change Number 55 A/B

Table 2.3.7-1 (cont.)

Component Name	Tag No.	ASME Code Section III	Seismic Cat 1	Remotely Operated Valve	Class 1E/ Qual for Harsh Envir.	Safety-Related Display	Control PMS	Active Function	Loss of Motive Power Position
Refueling Cavity Drain Line Check Valve	SFS-PL-V072	Yes	Yes	No	-/-	No	-	Transfer Open Transfer Closed	-
SFS Containment Floodup Isolation Valve	SFS-PL-V075	Yes	Yes	No	-/-	Yes	-	-	-

Note: Dash (-) indicates not applicable.

Table 2.3.7-2		
Piping Line Name	**Line Number**	**ASME Code Section III**
Spent Fuel Pool to RNS Pump Suction	L014	Yes
Cask Loading Pit to RNS Pump Suction	L015	Yes
Refueling Cavity Drain	L033	Yes
PXS IRWST to SFS Pump Suction	L035	Yes
Refueling Cavity Skimmer to SFS Pump Suction	L036	Yes
Refueling Cavity Drain	L037	Yes
Refueling Cavity Drain	L044	Yes
Fuel Transfer Canal Drain	L047	Yes
Cask Washdown Pit Drain	L068	Yes
Cask Loading Pit Drain	L043	Yes
Cask Pit Transfer Branch Line	L045	Yes
Refueling Cavity Drain	L030	Yes
Refueling Cavity Drain	L040	Yes
Spent Fuel Pool Drain	L066	Yes
Cask Loading Pit to WLS	L067	Yes
RNS Return to Spent Fuel Pool	L100	Yes
SFS Containment Floodup Line	L120	Yes

Table 2.3.7-3			
Component Name	**Tag No.**	**Display**	**Control Function**
SFS Pump 1A	SFS-MP-01A	Yes (Run Status)	Start
SFS Pump 1B	SFS-MP-01B	Yes (Run Status)	Start
SFS Flow Sensor	SFS-13A	Yes	-
SFS Flow Sensor	SFS-13B	Yes	-
Spent Fuel Pool Temperature Sensor	SFS-018	Yes	-
Cask Loading Pit Level Sensor	SFS-022	Yes	-

Note: Dash (-) indicates not applicable.

Table 3.2-3 (Sheet 46 of ~~65~~68)

AP1000 CLASSIFICATION OF MECHANICAL AND FLUID SYSTEMS, COMPONENTS, AND EQUIPMENT

Tag Number	Description	AP1000 Class	Seismic Category	Principal Construction Code	Comments
Spent Fuel Pool Cooling System (Continued)					
SFS-PL-V038	SFS Discharge Line Containment Isolation	B	I	ASME III-2	
SFS-PL-V039	SFS Suction Line from IRWST Isolation	C	I	ASME III-3	
SFS-PL-V040	SFS Fuel Transfer Canal Drain Isolation	C	I	ASME III-3	
SFS-PL-V041	SFS Cask Loading Pit Drain Isolation	C	I	ASME III-3	
SFS-PL-V042	Cask Loading Pit to Pump Suction Isolation	C	I	ASME III-3	
SFS-PL-V043	SFS CVS Makeup Reverse Flow Prevention	C	I	ASME III-3	
SFS-PL-V045	SFS Discharge to Cask Loading Pit Isolation	C	I	ASME III-3	
SFS-PL-V047	SFS Demineralized Water Makeup to SFP Reverse Flow Prevent	D	NS	ASME III-3	
SFS-PL-V048	SFS Containment Penetration Test Connection	B	I	ASME III-2	
SFS-PL-V049	SFS Cask Loading Pit Drain to WLS Isolation	C	I	ASME III-3	
SFS-PL-V056	SFS Containment Penetration Test Connection Isolation	B	I	ASME III-2	
SFS-PL-V058	SFS Containment Isolation Valve V034 Test	C	I	ASME III-3	
SFS-PL-V066	Spent Fuel Pool to Cask Washdown Pit Isolation	C	I	ASME III-3	
SFS-PL-V067	SFS Containment Isolation Relief Valve	B	I	ASME III-2	
SFS-PL-V068	Cask Washdown Pit Drain Isolation	C	I	ASME III-3	
SFS-PL-V071	Refueling Cavity Overflow to SG Compartment	C	I	ASME III-3	
SFS-PL-V072	Refueling Cavity Overflow to SG Compartment	C	I	ASME III-3	
SFS-PL-V075	SFS Containment Floodup Isolation Valve	C	I	ASME III-3	

Table 3.9-16 (Sheet 16 of 234)

VALVE INSERVICE TEST REQUIREMENTS

Valve Tag Number	Description[1]	Valve/Actuator Type	Safety-Related Missions	Safety Functions[2]	ASME Class/ IST Category	Inservice Testing Type and Frequency	IST Notes
RNS-PL-V021	RNS Hot Leg Suction Pressure Relief	Relief	Maintain Close Transfer Open Transfer Close	Active Containment Isolation Safety Seat Leakage	Class 2 Category AC	Containment Isolation Leak Test/2 Years Class 2/3 Relief Valve Tests/10 Years and 20% in 4 Years	27
RNS-PL-V022	RNS Suction Header Containment Isolation - ORC	Remote MO GATE	Maintain Close Transfer Close	Active Containment Isolation Safety Seat Leakage Remote Position	Class 2 Category A	Remote Position Indication, Exercise/2 Years Containment Isolation Leak Test Exercise Full Stroke/Quarterly Operability Test	27, 31
RNS-PL-V023	RNS Suction from IRWST - Containment Isolation	Remote MO GATE	Maintain Close Transfer Close	Active Containment Isolation Safety Seat Leakage Remote Position	Class 2 Category A	Remote Position Indication, Exercise/2 Years Containment Isolation Leak Test Exercise Full Stroke/Quarterly Operability Test	27, 31
RNS-PL-V061	RNS Return from CVS - Containment Isolation	Remote AO GLOBE	Maintain Close Transfer Close	Active-to-Failed Containment Isolation Safety Seat Leakage Remote Position	Class 2 Category A	Remote Position Indication, Exercise/2 Years Containment Isolation Leak Test Exercise Full Stroke/Quarterly Operability Test	27, 31
SDS-PL-V001	SDS MCR Isolation Valve	Remote MO Butterfly	Transfer Close Maintain Close	Active Remote Position	Class 3 Category B	Remote Position Indication, Exercise/2 Years Exercise Full Stroke/Quarterly Operability Test	31
SDS-PL-V002	SDS MCR Isolation Valve	Remote MO Butterfly	Transfer Close Maintain Close	Active Remote Position	Class 3 Category B	Remote Position Indication, Exercise/2 Years Exercise Full Stroke/Quarterly Operability Test	31
SFS-PL-V031	SFS Refueling Cavity Drain to SGS Compartment Isolation	Manual	Maintain Close Maintain Open	Passive Remote Position	Class 3 Category B	Remote Position Indication/2 Years	
SFS-PL-V033	SFS Refueling Cavity Drain to Containment Sump Isolation	Manual	Maintain Close	Passive Remote Position	Class 3 Category B	Remote Position Indication/2 Years	
SFS-PL-V034	SFS Suction Line Containment Isolation	Remote MO Butterfly	Maintain Close Transfer Close	Active Containment Isolation Safety Seat Leakage Remote Position	Class 2 Category A	Remote Position Indication, Exercise/2 Years Containment Isolation Leak Test Exercise Full Stroke/Quarterly Operability Test	27, 31
SFS-PL-V035	SFS Suction Line Containment Isolation	Remote MO Butterfly	Maintain Close Transfer Close	Active Containment Isolation Safety Seat Leakage Remote Position	Class 2 Category A	Remote Position Indication, Exercise/2 Years Containment Isolation Leak Test Exercise Full Stroke/Quarterly Operability Test	27, 31
SFS-PL-V037	SFS Discharge Line Containment Isolation	Check	Maintain Close Transfer Close	Active Containment Isolation Safety Seat Leakage	Class 2 Category AC	Containment Isolation Leak Test Check Exercise/Quarterly	27

~~SFS-PL-V042~~	~~Cask Loading Pit to SFS Pump Suction Isolation Valve~~	~~Manual~~	~~Maintain Close Transfer Close~~	~~Active~~	~~B~~	~~Manual Exercise/2 Years~~	
~~SFS-PL-V045~~	~~SFS Pump Discharge Line to Cask Loading Pit Isolation Valve~~	~~Manual~~	~~Maintain Close Transfer Close~~	~~Active~~	~~B~~	~~Manual Exercise/2 Years~~	
~~SFS-PL-V049~~	~~Cask Loading Pit to WLS Isolation Valve~~	~~Manual~~	~~Maintain Close Transfer Close~~	~~Active~~	~~B~~	~~Manual Exercise/2 Years~~	

Table 3.9-16 (Sheet 17 of 234)

VALVE INSERVICE TEST REQUIREMENTS

Valve Tag Number	Description[1]	Valve/Actuator Type	Safety-Related Missions	Safety Functions[2]	ASME Class/ IST Category	Inservice Testing Type and Frequency	IST Notes
SFS-PL-V038	SFS Discharge Line Containment Isolation	Remote MO Butterfly	Maintain Close Transfer Close	Active Containment Isolation Safety Seat Leakage Remote Position	Class 2 Category A	Remote Position Indication, Exercise/2 Years Containment Isolation Leak Test Exercise Full Stroke/Quarterly Operability Test	27, 31
SFS-PL-V042	Cask Loading Pit to SFS Pump Suction Isolation Valve	Manual	Maintain Close Transfer Close	Active	B	Manual Exercise/2 Years	
SFS-PL-V045	SFS Pump Discharge Line to Cask Loading Pit Isolation Valve	Manual	Maintain Close Transfer Close	Active	B	Manual Exercise/2 Years	
SFS-PL-V049	Cask Loading Pit to WLS Isolation Valve	Manual	Maintain Close Transfer Close	Active	B	Manual Exercise/2 Years	
SFS-PL-V066	Spent Fuel Pool to Cask Washdown Pit Isolation Valve	Manual	Maintain Open Transfer Open	Active	B	Manual Exercise/2 Years	
SFS-PL-V067	SFS Containment Isolation Thermal Relief Valve	Relief	Maintain Close Transfer Close Transfer Open	Active Containment Isolation Safety Seat Leakage	AC	Containment Isolation Leak Test/2 Years	27
SFS-PL-V068	Cask Washdown Pit Drain Isolation Valve	Manual	Maintain Open Transfer Open	Active	B	Manual Exercise/2 Years	37
SFS-PL-V071	Refueling Cavity to Steam Generator Compartment	Check	Transfer Open Transfer Close Maintain Close	Active	Class 3 Category BC	Check Exercise/Refueling Shutdown	26
SFS-PL-V072	Refueling Cavity to Steam Generator Compartment	Check	Transfer Open Transfer Close Maintain Close	Active	Class 3 Category BC	Check Exercise/Refueling Shutdown	26
SFS-PL-V075	SFS Containment Floodup Isolation Valve	Manual	Maintain Close Maintain Open	Passive Remote Position	Class 3 Category B	Remote Position Indication/2 Years	
SGS-PL-V027A	Power-Operated Relief Valve Block Valve Steam Generator 01	Remote MO GATE	Maintain Close Transfer Close	Active Containment Isolation Remote Position	Class 2 Category B	Remote Position Indication, Exercise/2 Years Exercise Full Stroke/Quarterly Operability Test	31
SGS-PL-V027B	Power-Operated Relief Valve Block Valve Steam Generator 02	Remote MO GATE	Maintain Close Transfer Close	Active Containment Isolation Remote Position	Class 2 Category B	Remote Position Indication, Exercise/2 Years Exercise Full Stroke/Quarterly Operability Test	31
SGS-PL-V030A	Main Steam Safety Valve Steam Generator 01	Relief	Maintain Close Transfer Open Transfer Close	Active Containment Isolation Remote Position	Class 2 Category BC	Remote Position Indication, Alternate/2 Years Class 2/3 Relief Valve Tests/5 Years and 20% in 2 Years	7

Table 3.11-1 (Sheet 42 of 50)

ENVIRONMENTALLY QUALIFIED ELECTRICAL AND MECHANICAL EQUIPMENT

Description	AP1000 Tag No.	Envir. Zone (Note 2)	Function (Note 1)	Operating Time Required (Note 5)	Qualification Program (Note 6)
RNS Pump A Suction Piping Drain Isolation	RNS-PL-V036A	6	PB	1 yr	M **
RNS Pump B Suction Piping Drain Isolation	RNS-PL-V036B	6	PB	1 yr	M **
RNS HX A Channel Head Drain Isolation	RNS-PL-V046A	6	PB	1 yr	M **
RNS HX B Channel Head Drain Isolation	RNS-PL-V046B	6	PB	1 yr	M **
RNS Pump A Casing Drain Isolation	RNS-PL-V050	6	PB	1 yr	M **
RNS Pump B Casing Drain Isolation	RNS-PL-V051	6	PB	1 yr	M **
RNS Suction from SFP Isolation	RNS-PL-V052	6	PB	1 yr	M **
RNS Discharge to SFP Isolation	RNS-PL-V053	6	PB	1 yr	M **
RNS Suction from Cask Loading Pit Isolation Valve	RNS-PL-V055	6	PB	1 yr	M **
RNS Pump Suction to Cask Loading Pit Isolation	RNS-PL-V056	6	PB	1 yr	M **
RNS Train A Miniflow Isolation Valve	RNS-PL-V057A	6	PB	1 yr	M **
RNS Train B Miniflow Isolation Valve	RNS-PL-V057B	6	PB	1 yr	M **
RNS Pump Suction Containment Isolation Test Connection	RNS-PL-V059	6	PB	1 yr	M **
LT019A Root Isolation Valve	SFS-PL-V024A	6	PB	1 yr	M **
LT019B Root Isolation Valve	SFS-PL-V024B	6	PB	1 yr	M **
LT019C Root Isolation Valve	SFS-PL-V024C	6	PB	1 yr	M **
LT020 Root Isolation Valve	SFS-PL-V028	6	PB	1 yr	M **
SFS Refueling Cavity Drain to SGS Compartment Isolation	SFS-PL-V031	1	PB	1 yr	M *
Limit Switch	SFS-PL-V031-L	1	PAMS	1 yr	E *
SFS Refueling Cavity Suction Isolation	SFS-PL-V032	1	PB	1 yr	M *
SFS Refueling Cavity Drain to Containment Sump Isolation	SFS-PL-V033	1	PB	1 yr	M *
Limit Switch	SFS-PL-V033-L	1	PAMS	1 yr	E *
SFS Suction Line from IRWST Isolation	SFS-PL-V039	1	PB	1 yr	M *
SFS Fuel Transfer Canal Suction Isolation	SFS-PL-V040	6	PB	1 yr	M **

Table 3.11-1 (Sheet 43 of 50)

ENVIRONMENTALLY QUALIFIED ELECTRICAL AND MECHANICAL EQUIPMENT

Description	AP1000 Tag No.	Envir. Zone (Note 2)	Function (Note 1)	Operating Time Required (Note 5)	Qualification Program (Note 6)
SFS Cask Loading Pit Suction Isolation	SFS-PL-V041	6	PB	1 yr	M **
SFS CVS Makeup Reverse Flow Prevention	SFS-PL-V043	6	PB	1 yr	M **
SFS Containment Penetration Test Connection	SFS-PL-V048	6	PB	1 yr	M **
SFS Containment Penetration Test Connection Isolation	SFS-PL-V056	1	PB	1 yr	M *
SFS Containment Isolation Valve V034 Test	SFS-PL-V058	1	PB	1 yr	M *
SFS Containment Floodup Isolation Valve	SFS-PL-V075	1	PB	1 yr	M *
Limit Switch	SFS-PL-V075-L	1	PAMS	1 yr	E *
LT001 Root Isolation Valve	SGS-PL-V001A	1	PB	1 yr	M *
LT005 Root Isolation Valve	SGS-PL-V001B	1	PB	1 yr	M *
LT001 Root Isolation Valve	SGS-PL-V002A	1	PB	1 yr	M *
LT005 Root Isolation Valve	SGS-PL-V002B	1	PB	1 yr	M *
LT002 Root Isolation Valve	SGS-PL-V003A	1	PB	1 yr	M *
LT006 Root Isolation Valve	SGS-PL-V003B	1	PB	1 yr	M *
LT002 Root Isolation Valve	SGS-PL-V004A	1	PB	1 yr	M *
LT006 Root Isolation Valve	SGS-PL-V004B	1	PB	1 yr	M *
LT003 Root Isolation Valve	SGS-PL-V005A	1	PB	1 yr	M *
LT007 Root Isolation Valve	SGS-PL-V005B	1	PB	1 yr	M *
LT003 Root Isolation Valve	SGS-PL-V006A	1	PB	1 yr	M *
LT007 Root Isolation Valve	SGS-PL-V006B	1	PB	1 yr	M *
LT004 Root Isolation Valve	SGS-PL-V007A	1	PB	1 yr	M *
LT008 Root Isolation Valve	SGS-PL-V007B	1	PB	1 yr	M *
LT004 Root Isolation Valve	SGS-PL-V008A	1	PB	1 yr	M *
LT008 Root Isolation Valve	SGS-PL-V008B	1	PB	1 yr	M *
LT011 Root Isolation Valve	SGS-PL-V010A	1	PB	1 yr	M *
LT013 Root Isolation Valve	SGS-PL-V010B	1	PB	1 yr	M *
LT011 Root Isolation Valve	SGS-PL-V011A	1	PB	1 yr	M *
LT013 Root Isolation Valve	SGS-PL-V011B	1	PB	1 yr	M *
LT012 Root Isolation Valve	SGS-PL-V012A	1	PB	1 yr	M *
LT014 Root Isolation Valve	SGS-PL-V012B	1	PB	1 yr	M *
LT012 Root Isolation Valve	SGS-PL-V013A	1	PB	1 yr	M *

Table 3I.6-3 (Sheet 23 of 312)

LIST OF AP1000 SAFETY-RELATED ELECTRICAL AND MECHANICAL EQUIPMENT NOT HIGH FREQUENCY SENSITIVE

Description	AP1000 Tag Number	Comment
SFS Suction Line from IRWST Isolation	SFS-PL-V039	2
SFS Fuel Transfer Canal Suction Isolation	SFS-PL-V040	2
SFS Cask Loading Pit Suction Isolation	SFS-PL-V041	2
SFS CVS Makeup Reverse Flow Prevention	SFS-PL-V043	2
SFS Containment Penetration Test Connection	SFS-PL-V048	2
SFS Containment Penetration Test Connection Isolation	SFS-PL-V056	2
SFS Containment Isolation Valve V034 Test	SFS-PL-V058	2
SFS Containment Floodup Isolation Valve	SFS-PL-V075	2
LT001 Root Isolation Valve	SGS-PL-V001A	2
LT005 Root Isolation Valve	SGS-PL-V001B	2
LT001 Root Isolation Valve	SGS-PL-V002A	2
LT005 Root Isolation Valve	SGS-PL-V002B	2
LT002 Root Isolation Valve	SGS-PL-V003A	2
LT006 Root Isolation Valve	SGS-PL-V003B	2
LT002 Root Isolation Valve	SGS-PL-V004A	2
LT006 Root Isolation Valve	SGS-PL-V004B	2
LT003 Root Isolation Valve	SGS-PL-V005A	2
LT007 Root Isolation Valve	SGS-PL-V005B	2
LT003 Root Isolation Valve	SGS-PL-V006A	2
LT007 Root Isolation Valve	SGS-PL-V006B	2
LT004 Root Isolation Valve	SGS-PL-V007A	2
LT008 Root Isolation Valve	SGS-PL-V007B	2
LT004 Root Isolation Valve	SGS-PL-V008A	2
LT008 Root Isolation Valve	SGS-PL-V008B	2

Table 7.5-1 (Sheet 7 of 12)

POST-ACCIDENT MONITORING SYSTEM

Variable	Range/ Status	Type/ Category	Qualification		Number of Instruments Required	Power Supply	QDPS Indication (Note 2)	Remarks
			Environmental	Seismic				
Water-cooled chiller status	On/Off	F3	None	None	1/chiller	Non-1E	No	
Water-cooled chilled water pump status	On/Off	F3	None	None	1/pump	Non-1E	No	
Water-cooled chilled water valve status	Open/ Closed	F3	None	None	1/valve	Non-1E	No	
Spent fuel pool pump flow	0-1500 gpm	F3	None	None	1/pump	Non-1E	No	
Spent fuel pool temperature	50-250°F	F3	None	None	1	Non-1E	No	
Spent fuel pool water level	0-100% of span	D2, F3	Mild	Yes	3 (Note 4)	1E	Yes	
SFS to SGS compartment valve status	Open/ Closed	D2	Harsh	Yes	1/valve (Note 7)	1E	Yes	
SFS to cont. sump valve status	Open/ Closed	D2	Harsh	Yes	1/valve (Note 7)	1E	Yes	
SFS floodup valve status	Open/ Closed	D2	Harsh	Yes	1/valve (Note 7)	1E	Yes	
CMT discharge isolation valve status	Open/ Closed	D2	Harsh	Yes	1/valve (Note 7)	1E	Yes	
CMT inlet isolation valve status	Open/ Closed	D2	Harsh	Yes	1/valve (Note 7)	1E	Yes	
CMT upper water level sensor	74.5% - 64% of Volume	D2, F2	Harsh	Yes	1/tank	1E	Yes	
CMT lower water level sensor	27% - 17% of Volume	D2, F2	Harsh	Yes	1/tank	1E	Yes	
IRWST injection isolation valve (Squib)	Open/ Closed	D2	Harsh	Yes	1/valve (Note 7)	1E	Yes	
IRWST line isolation valve status (MOV)	Open/ Closed	D3	None	None	1/valve	Non-1E	No	
ADS: first, second and third stage valve status	Open/ Closed	D2	Harsh	Yes	1/valve (Note 7)	1E	Yes	

Table 7.5-7 (Sheet 3 of 4)

SUMMARY OF TYPE D VARIABLES

System	Variable	Type/Category
Safeguards (continued)	Accumulator/isolation valve status	D3
	PRHR flow	D2
	Containment recirculation isolation valve status (MOV)	D2
	Containment recirculation isolation valve status (non-MOV)	D2
	PRHR HX inlet temperature	D3
	PRHR HX outlet temperature	D2
	IRWST surface temperature	D3
	IRWST bottom temperature	D3
	IRWST water level	D2
	IRWST gutter bypass isolation valve status	D2
	Remotely operated containment isolation valve status	D2
Chemical and Volume Control	Auxiliary spray line isolation valve status	D2
	Purification stop valve status	D2
	Purification return line stop valve status	D2
	Demineralized water isolation valve status	D2
Normal Residual Heat Removal	RNS hot leg suction isolation valve status	D2
Electric Power	Class 1E dc switchboard voltage	D2
Spent Fuel Pool	Spent fuel pool water level	D2
	SFS refueling cavity drain to SGS compartment isolation valve status	D2
	SFS refueling cavity drain to containment sump isolation valve status	D2
	SFS containment floodup isolation valve status	D2