APPENDIX A4A

STRUCTURAL ANALYSIS OF THE TN-40HT CASK BODY

A4A.1 INTRODUCTION

This appendix presents the structural analysis of the TN-40HT storage cask body which consists of the cask body, the trunnions and the outer shell. Analyses are performed to evaluate the various cask components under the loadings described in Section A3.2. Additional analyses are provided in Section A8 to evaluate the cask body under hypothetical accident loadings.

The detailed calculations for the cask body are presented in Section A4A.3 and the lid bolt analysis is reported in a separate Section A4A.4. The calculations for the trunnions and outer shell are reported in Sections A4A.6 and A4A.7, respectively. Section A4A.8 contains the calculations for the top neutron shield bolts and Section A4A.9 the facture toughness evaluation of the TN-40HT cask.

The design criteria used in the analyses of the cask components are discussed in Section A4.2.3. Key dimension of the storage cask are shown in Figure A4.2-1.

A4A.2 MATERIALS PROPERTIES DATA

This section provides the mechanical properties of materials used in the structural evaluation of the TN-40HT storage cask. Table A4A.2-1 lists the materials selected, the applicable components, and the minimum yield, ultimate, and design stress values specified by the ASME Code. All values reported in Table A4A.2-1 are for metal temperature up to 100°F. For higher temperatures, the temperature dependency of the material properties is reported in Table A4.2-18.

A4A.3 CASK BODY STRUCTURAL ANALYSIS

A4A.3.1 DESCRIPTION

The cask body consists of an inner shell and an outer shield shell (and a bottom shield). The inner shell (and bottom inner plate and shell flange) is the primary confinement barrier of the cask. Key dimensions of the cask body are shown in Figure A4.2-1. The inner shell is 1.5 in. thick cylinder welded to the shell flange and bottom inner plate. The inner shell is shrunk fit into the shield shell. The lid outer plate is bolted to the shell flange by 48, 1.375 in. diameter, high strength bolts and sealed with two metallic seals. The lid outer plate, inner shell, bottom inner plate, shell flange, shield shell and bottom shield components are made of low alloy steel forgings and plates. Two sets of trunnions are welded to the side of the shield shell upper and lower ends for handling and supporting the cask during lifting and handling operations. A basket assembly inside the cask cavity is used to position and support the fuel assemblies. A detailed physical description of the containment components is provided in Section A1. Section A1.5 contains reference drawings of the TN-40HT cask on which the analysis models are based.

A4A.3.2 ANSYS CASK MODEL

The outer shield shell, bottom shield plate, inner shell, bottom inner plate, shell flange, lid outer plate and lid shield plate are modeled utilizing ANSYS eight-node brick elements (SOLID45) as shown in Figure A4A.3-1. The individual cask components used for reporting stresses are shown in Figure A4A.3-2 through Figure A4A.3-6. Due to the cyclic symmetry of the TN-40HT cask body, some nodes in the FEM are rotated into a local cylindrical coordinate system (csys, 11) for easy application of node couplings and boundary conditions. This local coordinate system is located at the model axis of rotation (i.e. global Cartesian X =Y = Z = 0.0). The lid bolts are modeled using BEAM4 elements. The bolt preload is simulated using pre-strain in beam element real constant. The nodes at common surfaces between flange and lid are coupled in the axial direction. The contact surface nodes between outer shield shell inner surface and containment cylinder external surface are radially coupled. Also, the common nodes of the bottom shield plate and bottom inner plate are axially coupled. A total of 20,112 elements and 25,920 nodes comprise the TN-40HT cask finite element model. At the cask cut surface, symmetry boundary conditions are applied. Node couplings between the inner shell and outer shield shell are shown in Figure A4A.3-7. The loadings and displacement boundary conditions for individual load runs are shown in Figure A4A.3-8 through Figure A4A.3-15. To avoid congestion, symmetry boundary conditions (UZ) are not shown in these figures.

For all loading conditions, fuel and basket loads are applied as pressures based on specific component weights, accelerations and applied area. For the seismic loading, a radial cosine pressure distribution, derived in Section A4A.3.6, accounting for the fuel and basket inertial load is used. The radial pressures are applied using ANSYS macros. However, one radial pressure is hand-calculated for load case IL-9 (see below) to check that macro-computed pressures are in "order of magnitude."

Since outer shell, radial neutron shield, aluminum boxes, trunnions, protective cover and top neutron shield are not modeled, their weights are accounted for by increasing the shield shell and lid plate density as follows.

i) Shield Shell Density

Weight Shield Cylinder = π $(44.75^2 - 37.5^2)(172.65\text{-}6.25) \times 0.283 = 88{,}219$ lb.

Weights of components not in model:

Radial neutron shield = 12,285 lb
Outer shell = 7,543 lb
Trunnions = 920 lb (955 lb is used)
Aluminum Boxes = 2,233 lb
Protective Cover = 1,362 lb (1,357 lb is used)

Total weight not in the model = 24,343 lb (24,373 lb is used)

Total Weight associated with shield Cylinder = 88,219 + 24,373 = 112,592 lb

Equivalent Density of Shield Cylinder
= $(112{,}592/88{,}219) \times 0.283 = 0.361$ lb/in^3
(0.363 is conservatively used in the ANSYS runs)

ii) Lid Density

Weight of lid outer plate and Shield plate = 13,314 lb.

Weight of Top Neutron shield = 1,638 lb. (1,635 lb is used)

Total Weight = 13,314 + 1,635 = 14,949 lb

Equivalent Density of Lid & Shield
= $(14{,}949/13{,}314) \times 0.283 = 0.318$ lb/in^3

A4A.3.3 INDIVIDUAL LOAD CASES

The loading conditions analyzed simulate or represent various effects due to the normal and hypothetical accident conditions of storage as specified in 10CFR72. A total of 10 individual loading conditions listed in Table A4A.3-1 are executed for normal and accident load combinations for storage. Load case numbers IL-1 to IL-9 are analyzed elastically in this attachment, using an ANSYS (Reference 1) 3-D Finite Element Model (FEM) and are described in detail in Section A4A3.2 above. Load case IL-10 requires calculation of local stresses at the top and bottom trunnions / shield shell interface and are executed by hand calculations. Load case IL-10 is described in Section A4A.6.

The following describes the individual load cases analyzed using the ANSYS model described above:

1. Bolt Preload and Lid Seating Pressure (IL-1)

   A bolt axial pre-stress of 50 ksi (see Section A4A.4) at the bolt shank (1.375 inch diameter) is simulated by specifying an initial strain in BEAM4 elements representing the bolts. The required initial strain value of 0.002128 in/in (in the bolts) was determined by first calculating the initial strain required to produce an axial stress of 50 ksi (i.e., $\varepsilon = \sigma / E = 50\times10^3 / 26.45\times10^6 = 0.00189$ in/in). Then, an initial analysis with the calculated strain (0.00189 in/in) was conducted and the resulting bolt pre-stress was backed out. Since, a portion of this strain becomes elastic preload strain in the bolts, and a portion becomes strain in the clamped parts, the backed out pre-stress from the initial analysis will not produce the desired 50 ksi. The FEM was then updated by multiplying the 0.00189 in/in strain by the ratio of (desired pre-stress 50 ksi / initial analysis pre-stress), and a second preload analysis was conducted, which resulted in a 50 ksi bolt pre-stress.

   Lid seating pressure due to seating of metallic seals is computed due to 660,129 lb seal reaction (see Section A4A.4). Based on the closest nodes in model to the seal location, the Lid Seating Pressure, $p = 660{,}129 / \pi(38.4^2 - 37.35^2) = 2{,}642$ psi.

   This pressure is applied to the lid and flange seal areas. For the bolt preload and lid seating pressure ANSYS run, the cask is supported as shown in Figure A4A.3-8.

2. Fabrication Stress (IL-2)

   The fabrication stresses in the cask are computed due to a 0.040 inch nominal diametric interference between inner shell and shield shell. The shrink fit stresses are based on radial interference of 0.020 inches.

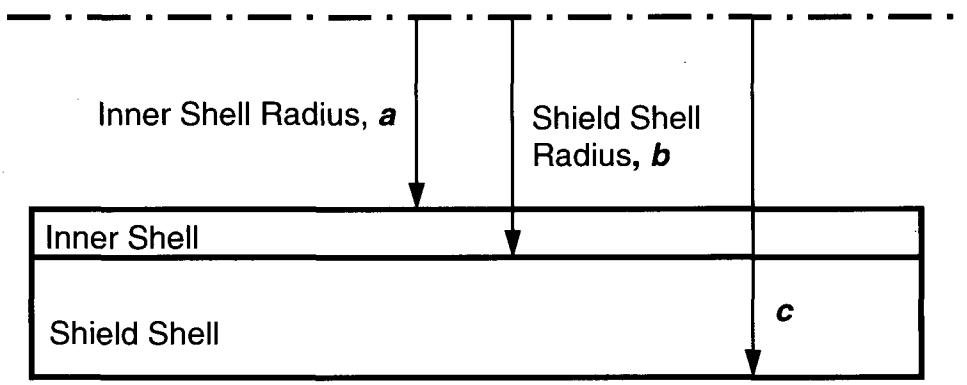

Interface pressure, $p = (E\delta / b)\,[(b^2 - a^2)\,(c^2 - b^2) / (2b^2\,(c^2 - a^2))]$
(Reference 2)

Where,

$\delta = 0.02$ in.
$E = 29.0\text{x}10^6$ psi
$a = 36.0$ in.
$b = 37.5$ in.
$c = 44.75$ in.

Note that using the higher value of E for the two materials at room temperature, is conservative, because it results in a higher interface pressure.

$$p = (29.0\text{x}10^6 \times 0.02 / 37.5) \times [\,(37.5^2 - 36.0^2)\,(44.75^2 - 37.5^2) / (2 \times 37.5^2\,(44.75^2 - 36.0^2))\,] = 511.7 \text{ psi} \ldots (515 \text{ psi is used})$$

The radial couplings between the inner shell and shield shell are deleted and the interface 515 psi pressure is applied to the two cylinders. During the run, the cask is supported as shown in Figure A4A.3-9.

3. 1g Down – Cask Support at Bottom (IL-3)

The following inertial load (pressure) magnitudes are applied to the FEM due to 1g vertical acceleration.

An axial pressure due to internals (P_i) is applied on the inside bottom surface of the cask cavity.

Weight of Fuel and Basket ≈ 80,100 lb.

$$P_i = 1.0 \times 80{,}100 / ((\pi) \times 36.0^2) = 19.673 \text{ psi}$$

The bottom nodes of cask are supported in the vertical direction. Loading and displacement boundary conditions are shown in Figure A4A.3-10.

4. Internal Pressure Loading (IL-4)

An internal pressure of 100 psig is applied to the cavity surface as shown in Figure A4A.3-11. The pressure is applied up to the metallic seal inner radius. The lid bolt preload and seal seating loads are removed in this run. During the run, the cask is supported as shown in Figure A4A.3-11.

5. External Pressure Loading (IL-5)

An external pressure of 25 psig is applied to the outer surface of the cask body. The pressure is applied up to the seal outer radius. During the run, the cask is supported as shown in Figure A4A.3-11.

6. Thermal Stress for 100 °F Hot Environment Ambient Temperature (IL-6)

The thermal analysis of the cask body is described in Section A3. The thermal model is used to obtain the steady state metal temperatures in the cask body for the normal condition which includes 100° F daily averaged ambient air temperature, maximum decay heat and maximum solar heat loading. The cask nodal temperatures from thermal results file are used to interpolate nodal temperatures in structural model. An ANSYS macro is used to get the nodal temperatures in the structural model. The resulting temperature distribution in cask is shown in Figure A4A.3-12. These temperatures are then used as ANSYS input for the thermal stress analysis. Temperature dependent material properties are used in this run. During the run, the cask is supported as shown in Figure A4A.3-12. It is noted that the maximum temperature in a small region of bottom inner plate exceeds assumed temperature of 350 °F. All other load cases (except thermal stress) are analyzed using the material properties at 350 °F. The effect of this temperature change on material modulus of elasticity will be negligible. The thermal stresses, however, are calculated using exact temperatures and material properties.

7. Thermal Stresses for -40 °F Cold Environment Ambient Temperature (IL-7)

The thermal analysis of the cask body is described in Section A3. The thermal model is used to obtain the steady state metal temperatures in the cask body for the normal condition which includes -40 °F ambient air temperature, minimum decay heat and minimum solar heat loading. The cask nodal temperatures from thermal results file are used to interpolate nodal temperatures in structural model. An ANSYS macro is used to get the nodal temperatures in the structural model. The resulting temperature distribution in cask is shown in Figure A4A.3-13. These temperatures are then used as ANSYS input for the thermal stress analysis. Temperature dependent material properties are used in this run. During the run, the cask is supported as shown in Figure A4A.3-13.

8. 3g Lifting on Front Trunnion (IL-8)

The cask is oriented vertically in space and held by the 2 top trunnions. The inertial loading is simulated by applying a 3g vertical acceleration to the finite element model.
Since the internals are not included in the model, their loading effects are simulated by distributed pressure (P_i) acting on the inside bottom surface of the cask cavity.

Weight of Fuel and Basket ≈ 80,100 lb.

$P_i = 3.0 \times 80{,}100 / (\pi \times 36.0^2) = 59.02$ psi.

Loading and displacement boundary conditions are shown in Figure A4A.3-14.

9. Bounding Loads for Seismic, Tornado and Flood (IL-9)

A bounding load of 1g lateral and 2g down for seismic, tornado and flood is applied to the cask in vertical orientation. The cask is assumed to be restrained at the bottom nodes. For the inertial loading, a vertical acceleration of 2g is applied in the global Y direction and 1g lateral acceleration in X direction. Since the internals are not included in the model, their effects are calculated as follows:

i) Vertical loading effect of internals is simulated by a distributed pressure (P_i) acting on the inside bottom surface of the cask cavity.

$P_i = 2.0 \times 80{,}100 / (\pi \times 36.0^2) = 39.347$ psi

ii) The lateral loading effect of internals is simulated by applying a radial cosine varying pressure (internal contact angle 0° to 150° range) to inner shell cavity. The formula below produces the cosine distribution of internal pressure and is derived in Section A4A.3.6.

$$P_r = g\frac{W}{LR}\left[\frac{1}{\dfrac{\sin\left(\frac{\pi}{2}+\theta\right)}{\frac{\pi}{2\theta}+1}+\dfrac{\sin\left(\frac{\pi}{2}-\theta\right)}{\frac{\pi}{2\theta}-1}}\right]\cos\left(\frac{\pi\theta i}{2\theta}\right)$$

Where:
θ = ½ Angle of contact = 75°
θ_i = Circumferential angle pressure is applied
W = Weight of internals ~ 80,100 lb
L = Length pressure is applied =163 in
R = Radius pressure is applied = 36 in
g = Acceleration = g's

For example, a pressure applied at an angle of 7.5° would be calculated as follows.

$$P_r = 1.0\frac{80{,}100}{163.0\times 36}\left[\frac{1}{\dfrac{\sin(90+75)}{\frac{180}{2\times 75}+1}+\dfrac{\sin(90-75)}{\frac{180}{2\times 75}-1}}\right]\cos\left(\frac{180\times 7.5}{2\times 75}\right)$$

P_r = 13.65(0.7083) (0.9877) = 9.55 psi

Loading and displacement boundary conditions are shown in Figure A4A.3-15. The radial pressures are applied using an ANSYS macro.

A4A.3.4 TRUNNION LOCAL STRESSES

The analyses of the local stresses in the TN-40HT cask body due to the trunnion reactions (while lifting the cask) are evaluated in Section A4A.6 below.

A4A.3.5 EVALUATION (LOAD COMBINATIONS VS. ALLOWABLES)

ANSYS linear elastic analyses are performed for the above individual load cases. A summary of maximum nodal stress intensities in each major cask component under each individual load is presented in Table A4A.3-2. These individual loads are to be combined and evaluated for normal operating and accident conditions in Section A4.2.3.4.

A4A.3.6 PRESSURE DISTRIBUTION OVER CONTACT AREA OF CASK FOR IMPACT IN TRANSVERSE DIRECTION

Inertial loading from the internal basket acting in the transverse direction is applied as a load over the contact area on the inside surface of the cask. The pressure distribution is assumed to vary with a cosine distribution around the circumference of the cask. The circumferential cosine pressure distribution over a half angle θ is calculated as follows.

$$P_i = P_{max} \cos(\pi\theta_i / 2\theta)$$

Where,

P_i = Pressure load at angle θ_i.
P_{max} = Peak pressure load, at point of impact, and
θ_i = Angle corresponding to point of interest.

The circumferential pressure distribution is illustrated in the following sketch.

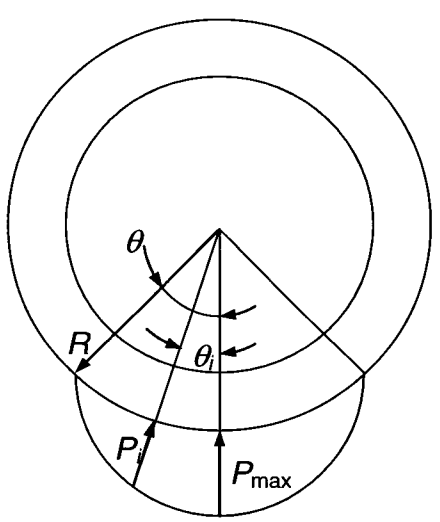

Circumferential Pressure Load Distribution

The peak pressure load P_{max} is determined by setting the integral of the vertical pressure components Q_i equal to the total transverse impact load F_t as follows.

$$F_t = \int_{-\theta}^{\theta} Q_i LRd\theta_i = \int_{-\theta}^{\theta} P_i \cos(\theta_i) LRd\theta_i = \int_{-\theta}^{\theta} P_{max} \cos\left(\frac{\pi\theta_i}{2\theta}\right)\cos(\theta_i) LRd\theta_i$$

$$= \frac{P_{max}LR}{2}\int_{-\theta}^{\theta}\left[\cos\left(\frac{\pi\theta_i}{2\theta}+\theta_i\right)+\cos\left(\frac{\pi\theta_i}{2\theta}-\theta_i\right)\right]d\theta_i$$

$$= P_{max}LR\left[\frac{\sin\left(\frac{\pi}{2}+\theta\right)}{\left(\frac{\pi}{2\theta}\right)+1}+\frac{\sin\left(\frac{\pi}{2}-\theta\right)}{\left(\frac{\pi}{2\theta}\right)-1}\right]$$

Rearranging terms gives the peak pressure P_{max}.

$$P_{max} = \frac{F_t}{LR}\left[\frac{\sin\left(\frac{\pi}{2}+\theta\right)}{\left(\frac{\pi}{2\theta}\right)+1}+\frac{\sin\left(\frac{\pi}{2}-\theta\right)}{\left(\frac{\pi}{2\theta}\right)-1}\right]^{-1}$$

Therefore, the pressure at any circumferential location is given by,

$$Pi = \frac{F_t}{LR}\left[\frac{\sin\left(\frac{\pi}{2}+\theta\right)}{\left(\frac{\pi}{2\theta}\right)+1}+\frac{\sin\left(\frac{\pi}{2}-\theta\right)}{\left(\frac{\pi}{2\theta}\right)-1}\right]^{-1}\cos\left(\frac{\pi\theta_i}{2\theta}\right)$$

where,

$F_t = g \times W$
W = Weight of internals or impact limiter
g = Acceleration in the transverse direction

Therefore,

$$Pi = g\frac{W}{LR}\left[\frac{\sin\left(\frac{\pi}{2}+\theta\right)}{\left(\frac{\pi}{2\theta}\right)+1}+\frac{\sin\left(\frac{\pi}{2}-\theta\right)}{\left(\frac{\pi}{2\theta}\right)-1}\right]^{-1}\cos\left(\frac{\pi\theta_i}{2\theta}\right)$$

A4A.4 LID BOLT ANALYSES

A4A.4.1 INTRODUCTION

This section evaluates the ability of the cask lid bolts to maintain the seal under all applicable loads. Also evaluated in this section are the lid bolt thread and internal thread stresses. The stress analysis is performed in accordance with NUREG/CR-6007 (Reference 3).

The 4.5 inch thick lid outer plate with a 5.5 inch shield plate is bolted directly to the shell flange by 48 high strength alloy steel 1.375 in. diameter bolts (with 1 ½ -8UN threaded portion). Close fitting alignment pins ensure that the lid is centered in the cask. The bolt material is SA-540 Gr. B24 or B23 CL 1 which has a minimum yield strength of 150 ksi at room temperature.

The bolt size, material and design loads for all TN-40HT closures including the lid bolts are provided in Table A4A.4-1.

The following ways to minimize bolt forces and bolt failures for cask are taken directly from Reference 3, page xiii. All of the following design methods are employed in the TN-40HT lid closure system.

- Use materials with similar thermal properties for the closure bolts, the lid, shell flange, and the cask wall to minimize the bolt forces generated by fire accident
- Apply sufficiently large bolt preload to minimize fatigue and loosening of the bolts by vibration.
- Lubricate bolt threads to reduce required preload torque and to increase the predictability of the achieved preload.
- Use closure lid design which minimizes the prying actions of applied loads.
- When choosing a bolt preload, pay special attention to the interactions between the preload and thermal load and between the preload and the prying action.

The following evaluations are presented in this section for the bolts where applicable:

- Bolt preload
- Gasket seating load
- Internal pressure load
- Temperature load
- Thread engagement length evaluation
- Bearing stress
- Load combinations for normal and accident conditions
- Bolt stresses and allowables

In this analysis the applicable load combinations from Reference 3 are analyzed using a bounding approach. The loads that are applicable to the lid bolts are preload, gasket seating load, internal pressure, and thermal. Furthermore, load combinations are split into two subsections for loads that are due to preload and loads that act against preload (internal pressure and gasket sealing forces). The specific design loads corresponding to the loading conditions mentioned above are presented in Table A4A.4-1.

It should be noted that tip over is not a credible event for the TN-40HT cask. The only accident load is 18" bottom end drop. The cask bottom end drop does not induce additional stress in the bolt. Since there are no credible accident loads, all normal condition loads are compared to both normal and accident condition allowable stresses. The design parameters for the lid closure are summarized in Table A4A.4-2. The lid bolt data and material allowables are presented in Table A4A.4-3 and Table A4A.4-4.

The maximum temperature at the lid seal region is less than 200 °F (Table A3.3-3). Thus, 300 °F is conservatively used for bolt stress evaluations.

A4A.4.2 LID BOLT LOAD CALCULATIONS

Symbols and terminology for this analysis are taken from Reference 3 and are reproduced in Table A4A.4-2.

Lid Bolt Preload:

The desired maximum preload stress in lid bolts is 50,000 psi.

For a 1.375 inch bolt shank diameter, the Tensile Stress Area is $(\pi/4)\times1.375^2 = 1.485$ in^2. Therefore,

$$F_a = 50{,}000 \text{ x Stress Area} = 50{,}000 \text{ x } 1.485 = 74{,}250 \text{ lb.}$$

The torque required to achieve this preload is (Reference 3, Section 4.0)

$$Q = K\,D_b\,F_a = 0.135\ (1.375)\ (74{,}250) = 13{,}783 \text{ in. lb.} = 1{,}149 \text{ ft. lb.}$$

A bolt torque range of 1,100 to 1,150 ft. lb. has been selected. Bolt preload for the maximum torque is,

$$F_a = Q/KD_b = 1{,}150 \times 12 / (0.135 \times 1.375) = 74{,}343 \text{ lbs, and}$$

$$\text{Preload stress} = 74{,}343 / 1.485 = 50{,}063 \text{ psi.}$$

Bolt Preload for the minimum torque is,

$$F_a = Q/KD_b = 1{,}100 \times 12 / (0.135 \times 1.375) = 71{,}111 \text{ lb.}$$

Residual torsional moment for maximum torque of 1,150 ft. lb. is,

$$M_{tr} = 0.5Q = 0.5(1{,}150 \times 12) = 6{,}900 \text{ in. lb.}$$

Residual torsional moment for minimum torque of 1,100 ft. lb. is,

$$M_{tr} = 0.5Q = 0.5(1{,}100 \times 12) = 6{,}600 \text{ in. lb.}$$

Residual tensile bolt force,

$$F_{ar} = F_a = 74{,}343 \text{ lbs}$$

Lid Closure Gasket Seating Load (Seal – Helicoflex HND 229 seals (Reference 6)):

The diameter of the inner seal, D_{is}, is 74.315 in., and the diameter of the outer seal, D_{lg}, is 75.882 in. The force to seat the seals is 1399 lbs./in (245 N/mm) (Reference 6, Helium sealing, Aluminum Jacket, 0.260 inch cross section) times the circumference of the seal. Therefore the force required to seat the seals is:

$$\text{Inner: } \pi\ (74.315)\ (1399) = 326{,}621 \text{ lb.}$$
$$\text{Outer: } \pi\ (75.882)\ (1399) = 333{,}508 \text{ lb.}$$

$$\text{Total, } F_a = 660{,}129 \text{ lb.}$$

Therefore, the gasket seating load is,

$$F_a/48 = 660{,}129 / 48 = 13{,}753 \text{ lb./bolt.}$$

Lid Bolt Internal Pressure Loads (Reference 3, Table 4.3)
Axial force per bolt due to internal pressure is,

$$F_a = \frac{\pi D_{lg}^2 (P_{li} - P_{lo})}{4N_b}$$

D_{lg} diameter of the outer seal = 75.882 in. Then,

$$F_a = \frac{\pi(75.882^2)(100-0)}{4(48)} = 9{,}422 \text{ lb./bolt}$$

The fixed edge closure lid force is,

$$F_f = \frac{D_{lb}(P_{li} - P_{lo})}{4} = \frac{79.31(100)}{4} = 1{,}983 \text{ lb. in.}^{-1}$$

The fixed edge closure lid moment is,

$$M_f = \frac{(P_{li} - P_{lo})D_{lb}^2}{32} = \frac{100(79.31^2)}{32} = 19{,}656 \text{ in. lb. in.}^{-1}$$

The shear bolt force per bolt is,

$$F_s = \frac{\pi E_l t_l (P_{li} - P_{lo}) D_{lb}{}^2}{2N_b E_c t_c (1 - N_{ul})} = \frac{\pi(26.7\times10^6)(4.5)(100)(79.31)^2}{2(48)(26.7\times10^6)(8.8)(0.7)} = 15{,}037 \text{ lb./bolt}$$

The gap between the bolt shank and the lid (1.625 in. – 1.375 in. = 0.25 in.) is bigger than the gap between the lid and cask (72.87 - 72.67 = 0.20 in.) which ensures that the lid will contact the cask before the bolts get loaded in shear, therefore $F_s = 0$.

A4A.4.3 Lid Bolt Temperature Loads

The lid bolt material is SA 540 Gr B24 or B23 CL 1. The lid and flange are both made of SA-350 Gr. LF3 or SA-203 GR. E. The bolts, lid and flange have the same coefficient of thermal expansion (6.9 x 10^{-6} in/in-°F at 300°F). Therefore, heating to the maximum isothermal temperature will generate no bolt loads.

A4A.4.4 Lid Bolt Load Combinations (Reference 3, Table 4.9)

A summary of lid bolt individual load and load combinations are presented in the Table A4A.4-5 and Table A4A.4-6 respectively.

A4A.4.5 Lid Bolt Additional Prying Bolt Force (Reference 3, Table 2.1)

Since all applied loads are outward acting, and the additional prying bolt force specified in Reference 3 can only be generated by inward acting loads, no additional prying bolt forces act on the closure lid bolts.

A4A.4.6 Lid Bolt Bending Moment Bolt (Reference 3, Table 2.2)

The maximum bending bolt moment, M_{bb}, generated by the applied load is evaluated as follows:

$$M_{bb} = \left(\frac{\pi D_{lb}}{N_b}\right)\left[\frac{K_b}{K_b + K_l}\right] M_f$$

The K_b and K_l are based on geometry and material properties and are defined in Reference 3, Table 2.2. By substituting the values given above,

$$K_b = \left(\frac{N_b}{L_b}\right)\left(\frac{E_b}{D_{lb}}\right)\left(\frac{D_b^4}{64}\right) = \left(\frac{48}{4.5}\right)\left(\frac{26.7\times10^6}{79.31}\right)\left(\frac{1.375^4}{64}\right) = 2.006 \times 10^5, \text{ and}$$

$$K_l \frac{E_l t_l^3}{3\left[\left(1-N_{ul}^2\right)+\left(1-N_{ul}\right)^2\left(\frac{D_{lb}}{D_{lo}}\right)^2\right] D_{lb}} = \frac{26.7\times10^6(10.0^3)}{3\left[\left(1-0.3^2\right)+\left(1-0.3\right)^2\left(\frac{79.31}{82.75}\right)^2\right] 79.31}$$

$$= 8.2507 \times 10^7$$

Therefore,

$$M_{bb} = \left(\frac{\pi 79.31}{48}\right)\left[\frac{2.006\times10^5}{2.006\times10^5 + 8.2507\times10^7}\right] M_f = 0.01259\ M_f.$$

For load case 2, M_f = 19,656 in. lb. Substituting this value into the equation above gives,

M_{bb} = 247.5 in. lb. / bolt.

A4A.4.7 Lid Bolt Stress Calculations (Reference 3, Table 5.1)

Average Tensile Stress:

The bolt preload is calculated to withstand the worst case load combination and to maintain a clamping (compressive) force on the closure joint, under both normal and accident conditions. Based upon the load combination results (see Table A4A.4-6), it is shown that a positive (compressive) load is maintained on the clamped joint for all loads. Since there are no credible accident loads applicable for the lid bolts, all normal condition loads are compared to both normal and accident condition allowable stresses. The maximum non-prying tensile force for normal conditions is 74,343 lb, from load case 1.A. This load is used to compute bolt stresses below.

Normal Condition:

$$S_{ba} = 1.2732\frac{F_a}{D_{ba}^2} = 1.2732\frac{74{,}343}{1.375^2} = 50{,}065 \text{ psi.} = 50.1 \text{ ksi.}$$

Bending Stress:

Normal Condition:

$$S_{bb} = 10.186\frac{M_{bb}}{D_{ba}^3} = 10.186\frac{247.5}{1.375^3} = 970 \text{ psi.} = 0.97 \text{ ksi.}$$

Shear Stress:

The average shear stress caused by shear bolt force F_s is,

$$S_{bs} = 0.$$

For normal conditions the maximum shear stress caused by the torsional moment M_t is,

$$S_{bt} = 5.093\frac{M_t}{D_{ba}^3} = 5.093\frac{6{,}900}{1.375^3} = 13{,}518 \text{ psi.} = 13.5 \text{ ksi.}$$

Maximum Combined Stress Intensity:

The maximum combined stress intensity is calculated in the following way (Reference 3, Table 5.1).

$$S_{bi} = [(S_{ba} + S_{bb})^2 + 4(S_{bs} + S_{bt})^2]^{0.5}$$

For normal conditions combine tension, shear, bending, and residual torsion.

$$Sbi = [(50{,}065 + 970)^2 + 4\ (0 + 13{,}518)^2]^{0.5} = 57{,}754 \text{ psi.} = 57.8 \text{ ksi.}$$

Stress Ratios:

In order to meet the stress ratio requirement, the following relationship must hold for both normal and accident conditions.

$$R_t^2 + R_s^2 < 1$$

Where R_t is the ratio of average tensile stress to allowable average tensile stress, and R_s is the ratio of average shear stress to allowable average shear stress.

For normal conditions:

$$R_t = 50{,}065/93{,}500 = 0.5355,$$

$$R_s = 13{,}518/56{,}100 = 0.241,$$

$$R_t^2 + R_s^2 = (0.5355)^2 + (0.241)^2 = 0.345 < 1.$$

For accident conditions (using maximum normal condition loads):

$$R_t = 50{,}065/115{,}500 = 0.433,$$

$$R_s = 13{,}518/69{,}300 = 0.195,$$

$$R_t^2 + R_s^2 = (0.433)^2 + (0.195)^2 = 0.226 < 1.$$

A4A.4.8 Lid Bolt Bearing Stress (Under Bolt Head)

The maximum axial force is 74,343 lb for normal conditions. A bolt hole of 1.625 inch diameter is used for the shank.

$H = 2.25/2$ in.
$B = 1.125 \tan(30°) = 0.650$ in.

Total Area of one triangle
$= (1.125)(0.650) = .731 \text{ in}^2.$

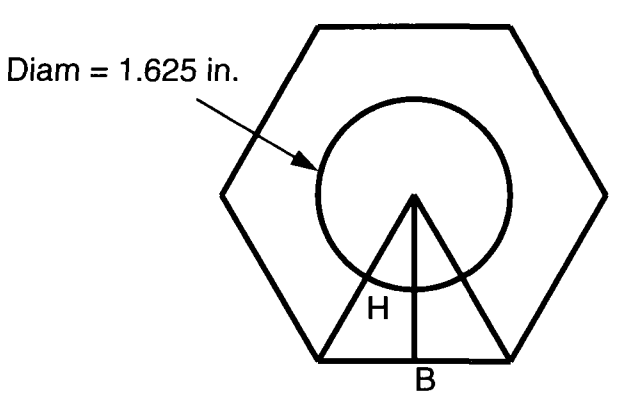

Total area under Bolt head - Bolt Hole area
$= 6(0.731) - (\pi/4)(1.625^2) = 2.31 \text{ in}^2$.

The total bearing area is 2.31 in.^{2} The bearing stress for normal conditions is,

Bearing Stress = 74,343/2.31 = 32,179 psi. = 32.2 ksi.

The allowable normal condition bearing stress on the lid is taken to be the yield stress of the lid material at 300 °F. The lid is manufactured out of SA-350 GR. LF3 or SA-203 GR. E, which has a yield strength of 33.2 ksi at 300 °F.

A4A.4.9 Summary of Lid Bolt Stresses

A summary of the stresses calculated above is listed in the Table A4A.4-7.

A4A.4.10 Minimum Engagement Length for Lid Bolt and Flange

For a 1½ – 8UN – 2A bolt, the material is SA – 540 Gr. B24 or B23 CL 1, with

S_u = 165 ksi., and
S_y = 150 ksi (at room temperature)

The flange material is SA – 350 Gr LF3 or SA-203 Gr. E, with

S_u = 70 ksi., and

S_y = 37.5 ksi (at room temperature)

The minimum engagement length L_e for the bolt and flange is (Reference 7, page 1490),

$$L_e = \frac{2A_t}{3.1416K_{n\max}\left[\frac{1}{2} + .57735n\left(E_{s\min} - K_{n\max}\right)\right]}$$

Where,

A_t = tensile stress area = 1.4718 in.^{2} (Reference 7, page 1490), for S_u>100,000 psi
n = number of threads per inch = 8,
$K_{n\,max}$ = maximum minor diameter of internal threads = 1.390 in., (Reference 7, page 1728)
$E_{s\,min}$ = minimum pitch diameter of external threads = 1.4093 in., (Reference 7, page 1728)

$D_{s\,min}$ = minimum major diameter of external threads = 1.4828 in. (Reference 7, page 1728)

Substituting the values given above,

$$L_e = \frac{2(1.4718)}{(3.1416)1.390\left[\frac{1}{2} + .57735(8)(1.4093 - 1.390)\right]} = 1.1442 \text{ in.}$$

$$J = \frac{A_s \times S_{ue}}{A_n \times S_{ui}} \quad \text{(Reference 7)}$$

Where, S_{ue} is the tensile strength of external thread material, and S_{ui} is the tensile strength of internal thread material.

A_s = shear area of external threads
= $3.1416\ n\ L_e\ K_{n\,max}\ [1/(2n) + 0.57735\ (E_{s\,min} - K_{n\,max})]$

A_n = shear area of internal threads
= $3.1416\ n\ L_e\ D_{s\,min}\ [1/(2n) + 0.57735(D_{s\,min} - E_{n\,max})]$

For the bolt / flange insert connection:

$E_{n\,max}$ = maximum pitch diameter of internal threads = 1.4283 in. (Reference 7 , page 1728).

Therefore,

A_s = 3.1416 (8) (1.1442) (1.390) [1 / (2 x 8) + 0.57735 (1.4093 – 1.390)]
= 2.944 in.^{2}

A_n = 3.1416 (8) (1.1442) (1.4828) [1 / (2 x 8) + 0.57735 (1.4828 – 1.4283)]
= 4.007 in.^{2}

So,

$$J = \frac{2.944(165.0)}{4.007(70.0)} = 1.73$$

Therefore, the minimum required engagement length, $Q = J\,L_e$ = 1.73 x 1.1442 = 1.98 in. The actual minimum engagement length = (7.00 bolt length – 4.50 lid thickness) = 2.50 in. > 1.98 in.

The above calculation bounds the minimum required engagement length if inserts are used because S_u of inserts (Reference 8) is higher than the S_u for the lid thus lowering the J value.

A4A.5 VENT AND DRAIN COVER BOLT ANALYSES

A4A.5.1 INTRODUCTION

This section evaluates the ability of the cask vent/drain cover bolts to maintain the seal under all applicable loads. The stress analysis is performed in accordance with NUREG/CR-6007 (Reference 3).

The bolt size, material and design loads for all TN-40HT vent/drain cover bolts are provided in Table A4A.4-1.

The following ways to minimize bolt forces and bolt failures for cask are taken directly from Reference 3, page xiii. All of the following design methods are employed in the TN-40HT lid closure system.

- Use materials with similar thermal properties for the closure bolts and the lid.
- Apply sufficiently large bolt preload to minimize fatigue and loosening of the bolts by vibration.
- Lubricate bolt threads to reduce required preload torque and to increase the predictability of the achieved preload.
- Use closure lid design which minimizes the prying actions of applied loads.
- When choosing a bolt preload, pay special attention to the interactions between the preload and thermal load and between the preload and the prying action.

The following evaluations are presented in this section for the bolts where applicable:

- Bolt preload
- Gasket seating load
- Internal pressure load
- Temperature load
- Bearing stress
- Load combinations for normal and accident conditions
- Bolt stresses and allowables

In this analysis the applicable load combinations from Reference 3 are analyzed using a bounding approach. The loads that are applicable to the vent/drain cover bolts are preload, gasket seating load, internal pressure, and thermal. Furthermore, load combinations are split into two subsections for loads that are due to preload

and loads that act against preload (internal pressure and gasket sealing forces). The specific design loads corresponding to the loading conditions mentioned above are presented in Table A4A.4-1.

It should be noted that tip over is not a credible event for the TN-40HT cask. The only accident load is 18" bottom end drop. The cask bottom end drop does not induce additional stress in the bolt. Since there are no credible accident loads, all normal condition loads are compared to both normal and accident condition allowable stresses. The vent/drain cover bolt data and material allowables are presented in Table A4A.5-1 and Table A4A.5-2.

The maximum temperature at the lid seal region is less than 200 °F (Table A3.3-3). Thus, 300 °F is conservatively used for bolt stress evaluations.

A4A.5.2 Vent and Drain Bolt Load Calculations

Vent and Drain Bolt Torque:

A bolt torque range of 60 to 65 ft. lb. has been selected for the vent and drain cover bolts.

Bolt preload for the maximum torque is,

$$F_a = Q/KD_b = 65 \times 12 / (0.135 \times 0.75) = 7{,}704 \text{ lbs, and}$$

$$\text{Preload stress} = 7{,}704 / 0.334 = 23{,}065 \text{ psi.}$$

Bolt Preload for the minimum torque is,

$$F_a = Q/KD_b = 60 \times 12 / (0.135 \times 0.75) = 7{,}111 \text{ lb.}$$

Residual torsional moment for maximum torque of 65 ft. lb. is,

$$M_{tr} = 0.5Q = 0.5(65 \times 12) = 390 \text{ in. lb.}$$

Residual torsional moment for minimum torque of 60 ft. lb. is,

$$M_{tr} = 0.5Q = 0.5(60 \times 12) = 360 \text{ in. lb.}$$

Residual tensile bolt force,

$$F_{ar} = F_a = 23{,}065 \text{ lbs}$$

Vent and Drain Cover Gasket Seating Load (Seal – Helicoflex HND 229 seals (Reference 6)):

The diameter of the inner seal, D_{ls}, is 4.881 in., and the diameter of the outer seal, D_{os}, is 5.689 in. The force to seat the seals is 1,142 lbs./in (245 N/mm) (Reference 6, Helium sealing, Aluminum Jacket, 0.161 inch cross section) times the circumference of the seal. Therefore the force required to seat the seals is:

Inner: π (4.881) (1,142) = 17,512 lb.
Outer: π (5.689) (1,142) = 20,410 lb.

Total, F_a = 37,922 lb.

Therefore, the gasket seating load is,

$F_a/8$ = 37,922 / 8 = 4,740 lb./bolt.

A4A.5.3 Vent and Drain Bolt Internal Pressure Loads (Reference 3, Table 4.3):

Axial force per bolt due to internal pressure is,

$$F_a = \frac{\pi D_{lg}^2 (P_{li} - P_{lo})}{4N_b}$$

D_{lg} diameter of outer seal = 5.689 in. Then,

$$F_a = \frac{\pi(5.689^2)(100-0)}{4(8)} = 318 \text{ lb./bolt}$$

The fixed edge cover lid force is,

$$F_f = \frac{D_{lb}(P_{li} - P_{lo})}{4} = \frac{7.38(100)}{4} = 185 \text{ lb. in.}^{-1}$$

The fixed edge cover lid moment is,

$$M_f = \frac{(P_{li} - P_{lo})D_{lb}^2}{32} = \frac{100(7.38^2)}{32} = 170 \text{ in. lb. in.}^{-1}$$

The shear bolt force per bolt is,

$$F_s = \frac{\pi E_l t_l (P_{li} - P_{lo}) D_{lb}^2}{2 N_b E_c t_c (1 - N_{ul})} = \frac{\pi (27.0 \times 10^6)(0.25)(100)(7.38)^2}{2(8)(26.7 \times 10^6)(2.8)(0.7)} = 138 \text{ lb./bolt}$$

A4A.5.4 Vent and Drain Bolt Temperature Loads:

From Reference 5, the vent and drain bolt material is SA-193 Gr B7, with $\alpha = 6.9 \times 10^{-6}$ in/in °F. The vent and drain covers are made from SA-240, type 304 with $\alpha = 9.2 \times 10^{-6}$ in/in °F, and the cask lid outer plate is made from SA-350 Gr. LF3 or SA-203 Gr. E, with $\alpha = 6.9 \times 10^{-6}$ in/in °F. Assuming a maximum temperature difference of 230 °F (300° F – 70° F), then from Reference 3, the thermal loads are computed as follows.

$$F_a = 0.25\, \pi\, D_b^2\, E_b\, (a_l\, T_l - a_b\, T_b)$$

$$F_a = 0.25(\pi)(0.75^2)(28.0 \times 10^6)[(9.2 \times 10^{-6})(230) - (6.9 \times 10^{-6})(230)] = 6{,}544 \text{ lb.}$$

Even though the vent and drain covers and the cask lid outer plate are constructed from different materials, the shear force per bolt, F_s, due to a temperature change of 230 °F is, 0 psi, since the clearance holes in the lid are oversized (0.781 inch diameter) allowing the covers to grow in the radial direction.

$$F_s = 0.$$

The temperature difference between the inside and outside of the covers will always be less than one degree because the vent and drain cover is only 1 inch thick. Consequently, the resulting bending moment is negligible.

$$M_f = 0.$$

A4A.5.5 Vent and Drain Cover Bolt Load Combinations (Reference 3, Table 4.9)

A summary of individual load and load combinations are presented in Table A4A.5-3 and Table A4A.5-4, respectively.

A4A.5.6 Vent and Drain Cover Bolt Additional Prying Bolt Force (Reference 3, Table 2.1)

Since all applied loads are outward acting, and the additional prying bolt force specified in Reference 3 can only be generated by inward acting loads, no additional prying bolt forces act on the cover lid bolts.

A4A.5.7 Vent and Drain Cover Bolt Bending Moment Bolt (Reference 3, Table 2.2)

The maximum bending bolt moment, M_{bb}, generated by the applied load is evaluated as follows:

$$M_{bb} = \left(\frac{\pi D_{lb}}{N_b}\right)\left[\frac{K_b}{K_b + K_l}\right]M_f$$

The K_b and K_l are based on geometry and material properties and are defined in Reference 3, Table 2.2. By substituting the values given above,

$$K_b = \left(\frac{N_b}{L_b}\right)\left(\frac{E_b}{D_{lb}}\right)\left(\frac{D_b^4}{64}\right) = \left(\frac{8}{0.25}\right)\left(\frac{28.0\times10^6}{7.38}\right)\left(\frac{0.75^4}{64}\right) = 6.002 \times 10^5, \text{ and}$$

$$K_l \frac{E_l t_l^3}{3\left[\left(1-N_{ul}^2\right)+\left(1-N_{ul}\right)^2\left(\frac{D_{lb}}{D_{lo}}\right)^2\right]D_{lb}} = \frac{27.0\times10^6(1.00^3)}{3\left[\left(1-0.3^2\right)+\left(1-0.3\right)^2\left(\frac{7.38}{9.00}\right)^2\right]7.38}$$
$$= 9.839 \times 10^5$$

Therefore,

$$M_{bb} = \left(\frac{\pi 7.38}{8}\right)\left[\frac{6.002\times10^5}{6.002\times10^5 + 9.839\times10^5}\right]M_f = 1.098\ M_f.$$

For load case 2, M_f = 170 in. lb. Substituting this value into the equation above gives,

M_{bb} = 187.0 in. lb. / bolt.

A4A.5.8 Vent and Drain Bolt Stress Calculations (Reference 3, Table 5.1)

Average Tensile Stress:

The bolt preload is calculated to withstand the worst case load combination and to maintain a clamping (compressive) force on the closure joint, under both normal and accident conditions. Based upon the load combination results (see Table A4A.5-4), it is shown that a positive (compressive) load is maintained on the clamped joint for all loads. Since there are no credible accident loads applicable for the vent and drain cover bolts, all normal condition loads are compared to both normal and accident condition allowable stresses. The maximum non-prying tensile force for normal conditions is 14,248 lb, from load case 1.A. This load is used to compute bolt stresses below.

The bolt diameter used for stress calculation is computed from the bolt stress area provided in Table A4A.4-1:

$$\text{Stress Area} = 0.334 = \pi/4\ D_{ba}^2 \Rightarrow D_{ba} = [\ 0.334 \times 4/\pi\ ]^{1/2} = 0.652 \text{ in.}$$

Normal Condition:

$$S_{ba} = 1.2732\frac{F_a}{D_{ba}^2} = 1.2732\frac{14{,}248}{0.652^2} = 42{,}672 \text{ psi.} = 42.7 \text{ ksi.}$$

Bending Stress:

Normal Condition:

$$S_{bb} = 10.186\frac{M_{bb}}{D_{ba}^3} = 10.186\frac{187}{0.652^3} = 6{,}872 \text{ psi.} = 6.9 \text{ ksi.}$$

Shear Stress:

The average shear stress caused by shear bolt force F_s is,

$$S_{bs} = 1.2732\frac{F_s}{D_{ba}^2} = 1.2732\frac{138}{0.652^2} = 413 \text{ psi.} = 0.4 \text{ ksi.}$$

For normal conditions the maximum shear stress caused by the torsional moment M_t is,

$$S_{bt} = 5.093\frac{M_t}{D_{ba}^3} = 5.093\frac{390}{0.652^3} = 7{,}166 \text{ psi.} = 7.2 \text{ ksi.}$$

Maximum Combined Stress Intensity:

The maximum combined stress intensity is calculated in the following way (Reference 3, Table 5.1).

$$S_{bi} = [(S_{ba} + S_{bb})^2 + 4(S_{bs} + S_{bt})^2]^{0.5}$$

For normal conditions combine tension, shear, bending, and residual torsion.

$$S_{bi} = [(42{,}672 + 6{,}872)^2 + 4\ (413 + 7{,}166)^2]^{0.5} = 51{,}811 \text{ psi.} = 51.8 \text{ ksi.}$$

Stress Ratios:

In order to meet the stress ratio requirement, the following relationship must hold for both normal and accident conditions.

$$R_t^2 + R_s^2 < 1$$

Where R_t is the ratio of average tensile stress to allowable average tensile stress, and R_s is the ratio of average shear stress to allowable average shear stress.

For normal conditions:

$$R_t = 42{,}672/62{,}700 = 0.681$$

$$R_s = 7{,}579/37{,}600 = 0.202$$

$$R_t^2 + R_s^2 = (0.681)^2 + (0.202)^2 = 0.504 < 1.$$

For accident conditions (using maximum normal condition loads):

$$R_t = 42{,}672/87{,}500 = 0.488$$

$$R_s = 7{,}579/52{,}500 = 0.144$$

$$R_t^2 + R_s^2 = (0.488)^2 + (0.144)^2 = 0.259 < 1.$$

A4A.5.9 Summary of Vent and Drain Bolt Stresses

A summary of the stresses calculated above is listed in the Table A4A.5-5.

A4A.6 TRUNNION ANALYSIS

A4A.6.1 INTRODUCTION

This section presents the evaluation of the TN-40HT cask trunnion stresses due to all applied loads as well as resulting local stresses generated in the cask shield shell.

The TN-40HT cask has two upper and two lower trunnions each of which are one piece forgings composed of SA-105 or SA-266 CL 2 or CL 4 carbon steel.

The upper trunnions are designed to meet the requirements of NUREG-0612 (Reference 17) for non-redundant lifting fixture. This is accomplished by evaluating the trunnions to the stress design factors required by ANSI N14.6 (Reference 9), i.e. capable of lifting 6 times and 10 times the cask weight without exceeding the yield and ultimate strengths of the material, respectively. The upper trunnions are also used to support the loaded cask in the vertical position during transfer to the ISFSI by a transport vehicle.

The lower trunnions are used to support the cask when the cask is in the horizontal position prior to fuel loading and also during rotation of the cask from a horizontal orientation to the vertical orientation. Since the lower trunnions are not relied upon to support the cask when loaded with fuel, their structural analysis is not presented.

The trunnion stress analysis is performed using standard bending and shear stress equations based on the trunnion loading configuration. Nominal dimensions of the trunnions and cask shell are used in the analysis.

Weight of TN-40HT cask used in this analysis is conservatively taken to be 250,000 lb when loaded with fuel.

For the trunnion stress analysis, the following load cases are evaluated:

- Lifting Loads (cask lifted from the pool to the decontamination area and then to the ISFSI). The upper trunnions are analyzed for 6g and 10g vertical loads.

The local shield shell stress calculation is based on the method described in Reference 10:

- 3g longitudinal lifting load applied to the upper trunnions (cask in the vertical orientation)

A spreadsheet was created to aid in the computation. Table A4A.6-4 is a hardcopy of this spreadsheet. The coefficients used in Table A4A.6-4 through are taken from Tables 1A through 4C of Reference 10.

A4A.6.2 MATERIAL PROPERTIES

The trunnions are one piece forgings composed of SA-105 or SA-266 CL 2 or CL 4 carbon steel with material properties shown in Table A4.2-18. These material properties are taken from ASME Code (Reference 5).

The shield shell material properties (SA-266 CL 2 or SA-516-70) used for the local stress analysis are also listed in Table A4.2-18.

The material properties used for the trunnion and shield shell stress analyses are taken at 300 °F, which is conservative based on the thermal evaluation described in Section A3.

A4A.6.3 STRESS CRITERIA

Stress in the Trunnion

The upper trunnions are designed to meet the requirements of NUREG-0612 (Reference 17) for non-redundant lifting fixture. This is accomplished by evaluating the trunnions to the stress design factors required by ANSI N14.6 (Reference 9), i.e. capable of lifting 6 times and 10 times the cask weight without exceeding the yield and ultimate strengths of the material, respectively.

Stress in the Shield Shell

The local stresses in the shield shell due to the trunnion loads are compared with the allowable stresses following requirements of the ASME Code, Section III, Subsection NB (Reference 11).

A4A.6.4 TRUNNION STRESS ANALYSIS

Analysis for the upper trunnions is based on a cask weight of 250 kips and corresponding 6/10g lifting loads. The trunnion cross sections are shown in Figure A4A.6-1.

Upper Trunnions:

Based on the nominal dimensions given in Figure A4A.6-1 the stress areas and moments of inertia (MOI) for the two different trunnion cross sections are calculated. For cross sections AA and BB the stress areas, MOI, and moment arms are computed as:

Stress Area AA = $\frac{\pi(17^2 - 12^2)}{4}$ = 113.9 in^2

MOI AA = $\frac{\pi(17^4 - 12^4)}{64}$ = 3082.0 in^4

Moment Arm AA = 8.94 – 0.63 – 0.31- (3-0.5)/2 = 6.75 in

Stress Area BB = $\frac{\pi(11.25^2 - 5^2)}{4}$ = 79.8 in^2

MOI BB = $\frac{\pi(11.25^4 - 5^4)}{64}$ = 755.6 in^4

Moment Arm BB = 4 – 0.63 – (3-0.5)/2 = 2.12 in

Table A4A.6-1 and Table A4A.6-2 summarize the stress evaluations. The applied shear load per trunnion is computed by multiplying the cask weight by the appropriate g-load per trunnion. The moment per trunnion is computed by multiplying the shear load by the moment arm length computed in this section.

A4A.6.5 TRUNNION LOCAL STRESS ANALYSIS

Case 1: 3g Longitudinal Lifting Load (Upper Trunnions)

For the 3g lifting load case, the cask is lifted vertically and supported by the upper trunnions. The g-load applied to the cask is 3g in the longitudinal direction.

At the upper trunnion the g load per trunnion is,

3g (longitudinal) / 2 sides / 1 trunnion = 1.5g longitudinal per trunnion

The following analytical method is taken from Reference 10. Figure A4A.6-2 illustrates the loads and moments as defined in this analysis as well as their orientation to the cask/trunnion system as a whole. Note that the all of the "u" locations are on the shield shell outer surface whereas "l" locations are on the inside shield shell surface.

Geometry:

Shield shell thickness at trunnion locations, T = 5.81 in.
Upper Trunnion radius, r_0 = 8.5 in.
Mean radius, R_M = (86.62 + 75.00)/4 = 40.405 in.
Upper trunnion moment arm = 9.66 in.

Shell Parameter (Reference 10) $\gamma = R_M/T = 40.405/5.81 = 6.954$
Attachment Parameter (Reference 10) $\beta = 0.875 \times r_0/R_M = 0.875 \times 8.5/40.405 = 0.184$

Trunnion loads according to Reference 10 sign convention:

$P = 0$ lb.
$M_L = 1.5 \times (-250{,}000) \times 9.66 = -3{,}622{,}500$ in. lb.
$M_C = 0$ in. lb.
$M_T = 0$ in. lb.
$V_L = 1.5 \times (-250{,}000) = -375{,}000$ lb.
$V_C = 0$ lb.

Stress intensity calculation

Stress intensities are calculated in the following way.

$$S.I. = \max\begin{cases} \frac{1}{2}\left[(\sigma_X + \sigma_\phi) \pm \sqrt{(\sigma_X - \sigma_\phi)^2 + 4\tau^2}\right] \\ \sqrt{(\sigma_X - \sigma_\phi)^2 + 4\tau^2} \end{cases}$$

From Table A4A.6-4, the maximum stress intensity for case 1 is 8,072 psi, on the outside of the shield shell at the front and back of the trunnion (Bu/Au, compression/tension). Where,

$\sigma_\phi = 6{,}059$ psi,
$\sigma_X = 8{,}072$ psi, and
$\tau = 0$ psi

Membrane Stress Calculation

In order to calculate the membrane and bending stresses, only those components associated with membrane or bending stress respectively are summed to calculate σ_ϕ, σ_x and τ. For example, to calculate the maximum membrane stress on the outside of the vessel for the 3g lifting load (Table A4A.6-4, locations Du, Cu):

$\sigma_{\phi m} = 0$ psi.
$\sigma_{xm} = 0$ psi.
$\tau_m = -2{,}417$ psi.

Using the above formula for stress intensity, the corresponding membrane stress intensity is

$$S.I. = \max\begin{cases} \frac{1}{2}\left[(-0-0)-\sqrt{(0-0)^2+4(-2{,}417)^2}\right] = 4{,}834 \text{ psi.} \\ \sqrt{(0-0)^2+4(-2{,}417)^2} = 4{,}834 \text{psi.} \end{cases}$$

$$= 4{,}834 \text{ psi}$$

A4A.6.6 CONCLUSIONS

From Table A4A.6-1 and Table A4A.6-2, it is shown that the trunnions are qualified for lifting/handling based on stress intensity according to the loading requirements set forth in Reference 9.

The results for the local shield shell stress analysis are presented in Table A4A.6-3. To evaluate load combinations N7 and N8 (see Table A4.2-5) the local stresses calculated are combined with stresses due to internal pressure and thermal load taken from Table A4A.3-2. A bounding approach was taken using the internal pressure load and the cold thermal load of the shield shell in order to envelope both load combinations N7 and N8. The combined results presented in these tables demonstrate that the cask shield shell is adequate to handle the required lifting and handling loads.

A4A.7 OUTER SHELL

A4A.7.1 INTRODUCTION

This attachment presents the structural analysis of the outer shell of the TN-40HT storage cask. The outer shell consists of a cylindrical shell section and outer shell rings (top and bottom closure plates) at each end which connect the shell to the cask body. The normal loads acting on the outer shell are due to internal pressure and normal handling loads.

A4A.7.2 DESCRIPTION

The outer shell is constructed from low-alloy carbon steel and is welded to the outer surface of the shield shell. The cylindrical shell section is 0.5 in. thick and the outer shell rings (top and bottom closure plates) are 0.75 inches thick. Pertinent dimensions are shown in Figure A4A.7-1. Section A1.5 contains reference drawings of TN-40HT storage cask on which the analysis are based.

A4A.7.3 Materials Input Data

The outer shell cylindrical section and outer shell rings are SA-516 Gr 70. The material properties are taken from the ASME Code (Reference 5) and are shown on Table A4.2-18.

A4A.7.4 APPLIED LOADS

While the cask is transported to the site in the horizontal position, it is always in the vertical position when loaded with fuel. Thus the structural analysis present here assumes the cask is in the vertical position with the following loading conditions:

- Cask in the Vertical Orientation
  - Stress due to 25 psig internal pressure
  - Stress due to 25 psig internal pressure and 3g inertia load (lifting)

A4A.7.5 METHOD OF ANALYSIS

ANSYS Model

A finite element model is built for the structural analysis of the outer shell and outer shell rings (top and bottom closure plates). The outer shell and outer shell rings (top and bottom closure plates) are modeled with ANSYS Solid 45 elements (Reference 1). The basic geometries of the outer shell, outer shell rings, and weld sizes used for analysis are shown in Figure A4A.7-1. The bounding weld sizes between the outer shell ring and shield shell, the outer shell ring and outer shell, weld between the outer shell ring pieces (ring may be fabricated from multiple pieces, groove weld size shall not be less than 0.55 in.) are used for the analysis. The finite element model is shown in Figure A4A.7-2.

Cask in the Vertical Orientation

- Stress due to 25 psig internal pressure

An internal pressure of 25 psig is used as the maximum pressure acting on the inner surface of the outer shell. The maximum shell stress intensity for this load case was determined to be 4,919 psi.

- Stress due to 25 psig internal pressure and 3g inertia load (lifting the cask in the vertical orientation)

The weight of the radial neutron shield and aluminum containers is modeled as an additional pressure on the inner surface of the bottom outer shell ring (closure plate). The added pressure load is 9.29 psi per g. The effect of the outer shell dead weight is accounted for by using a 3g gravitational load in the longitudinal direction. The maximum stress intensity for this load case was determined to be 7,044 psi.

A4A.7.6 ANALYSIS RESULTS

A. Maximum Stress Intensities for Each Loading Condition

A summary of the results obtained for maximum stress intensities for each loading condition is listed in Table A4A.7-1. These stresses are within the allowable stress of 1.5 S_m (at 300 °F, S_m= 22,400 psi, 1.5 S_m = 33,600 psi). The outer shell can be fabricated from two half cylindrical shell with 0.38" partial penetration weld. The maximum stress intensity and factors of safety at the weld location is also computed as follows:

Allowable stress at the weld = $0.3S_u$ = 0.3 x 70,000 = 21,000 psi (Reference 12)

In the vertical orientation loading condition, the outer shell is mainly in membrane tension/compression loads, the membrane stress is inverse proportion to the element thickness. The maximum weld stress is computed as follows:

25 psig internal pressure:
Max. stress intensity = 4,919 x 0.5 / 0.38 = 6,472 psi
Factor of Safety = 21,000 / 6,472 = 3.24

25 psig internal pressure + 3g inertia load:
Max. stress intensity = 7,044 x 0.5 / 0.38 = 9,268 psi
Factor of Safety = 21,000 / 9,268 = 2.27

B. Maximum Stress at Weld Locations (see Figure A4A.7-1)

Weld stress intensities are also calculated at the locations noted in Figure A4A.7-1. These values are listed in Table A4A.7-2.

The weld stress intensities are less than the allowable stress of 21.0 ksi (Reference 12, $0.3S_u$, SA-516 GR.70, at 300 °F).

A4A.8 TOP NEUTRON SHIELD BOLTS

A4A.8.1 INTRODUCTION

This section evaluates the top neutron shield bolts. The stress analysis is performed in accordance with NUREG/CR-6007 (Reference 3).

The bolt size, material and design loads for all TN-40HT top neutron shield bolts are provided in Table A4A.4-1.

The following evaluations are presented in this section for the bolts where applicable:

- Bolt preload
- Temperature load
- Bearing stress
- Load combinations for normal and accident conditions
- Bolt stresses and allowables

In this analysis the applicable load combinations from Reference 3 are analyzed using a bounding approach. The loads that are applicable to the top neutron shield bolts, are only preload and temperature loads. In addition, a hypothetical 3g load is applied for the purpose of conservatively bounding any unforeseen loads in these areas. The specific design loads corresponding to the loading conditions mentioned above are presented in Table A4A.4-1.

It should be noted that tip over is not a credible event for the TN-40HT cask. The only accident load is 18" bottom end drop. The cask bottom end drop does not induce additional stress in the bolt. Since there are no credible accident loads, all normal condition loads are compared to both normal and accident condition allowable stresses. The top neutron shield lid bolt data and material allowables are presented in Table A4A.5-1 and Table A4A.5-2.

The maximum temperature at the lid seal region is less than 200 °F (Table A3.3-3). Thus, 300 °F is conservatively used for bolt stress evaluations.

A4A.8.2 Top Neutron Shield Cover Bolt Load Calculations

Top neutron shield Cover Bolt Torque:

A bolt torque range of 90 to 100 ft. lb. has been selected for the top neutron shield cover bolts.

Bolt preload for the maximum torque is,

$$F_a = Q/KD_b = 100 \times 12 / (0.135 \times 1.25) = 7{,}111 \text{ lbs, and}$$

$$\text{Preload stress} = 6{,}400 / 0.969 = 7{,}339 \text{ psi.}$$

Bolt Preload for the minimum torque is,

$$F_a = Q/KD_b = 90 \times 12 / (0.135 \times 1.25) = 6{,}400 \text{ lb.}$$

Residual torsional moment for maximum torque of 100 ft. lb. is,

$$M_{tr} = 0.5Q = 0.5(100 \times 12) = 600 \text{ in. lb.}$$

Residual torsional moment for minimum torque of 90 ft. lb. is,

$$M_{tr} = 0.5Q = 0.5(90 \times 12) = 540 \text{ in. lb.}$$

Residual tensile bolt force,

$$F_{ar} = F_a = 7{,}339 \text{ lbs}$$

A4A.8.3 Top neutron shield Cover Bolt Temperature Loads

The top neutron shield cover bolt material is SA-193 Gr B7, with $\alpha = 6.9 \times 10^{-6}$ in/in °F. The top neutron shield cover is made from SA-516, Gr. 70 with $\alpha = 6.9 \times 10^{-6}$ in/in °F. Since the coefficient of thermal expansion for all materials is the same, heating to the maximum isothermal temperature will generate no bolt loads.

A4A.8.4 Top neutron shield Cover Bolt 3g Acceleration Load (Reference 3, Table 4.6)

The loads generated in the top neutron shield cover bolts by the 3g vertical load are computed below. The weight of the top neutron shield cover is 1,638 lb. However, 1,800 lb. is used in this analysis for conservatism. Also, a dynamic load factor of 1.1 is conservatively applied to the analysis.

The neutron shield bolts have 1.25"-7 UNC threads with tensile area of 0.969 in^2. Under design conditions the assembled and loaded (with fuel) TN-40HT never experiences a net upward acceleration or a side load exceeding the 1.0g bounding load. Nevertheless, a 3.0g upward or lateral load (not simultaneous) is assumed to conservatively evaluate these shield attachment bolts. The load per bolt is then 1800(1.1)(3)/4 = 1485 lb/bolt. The bolt stress under the 3.0g loading is equal to 3.0g x attached weight divided by the total bolt area. The stress is 3 x 1,800 lbs/(4 x 0.969 in^2)(1.1) = 1,533 psi. This is a tensile stress in the upward load case and a shear stress in the side load case.

A4A.8.5 Top Neutron Shield Cover Bolt Load Combinations (Reference 3, Table 4.9)

A summary of top neutron shield bolt individual load and load combinations are presented in and Table A4A.8-1 and Table A4A.8-2, respectively.

A4A.8.6 Top neutron shield Cover Bolt Stress Calculations (Reference 3, Table 5.1)

Average Tensile Stress:

The bolt diameter used for stress calculation is computed from the bolt stress area provided in Table A4A.4-1.

$$\text{Stress Area} = 0.969 = \pi/4\ D_{ba}^2 \Rightarrow D_{ba} = [\ 0.969 \times 4/\pi\ ]^{1/2} = 1.111 \text{ in.}$$

Normal Condition:

$$S_{ba} = 1.2732\frac{F_a}{D_{ba}^2} = 1.2732\frac{7{,}111}{1{,}111^2} = 7{,}335 \text{ psi.} = 7.3 \text{ ksi.}$$

For normal conditions the maximum shear stress caused by the torsional moment M_t is,

$$S_{bt} = 5.093\frac{M_t}{D_{ba}^3} = 5.093\frac{600}{1.111^3} = 2{,}228 \text{ psi.} = 2.2 \text{ ksi.}$$

Maximum Combined Stress Intensity:

The maximum combined stress intensity is calculated in the following way (Reference 3, Table 5.1).

$$S_{bi} = [(S_{ba} + S_{bb})^2 + 4(S_{bs} + S_{bt})^2]^{0.5}$$

For normal conditions combine tension, shear, bending, and residual torsion.

$$S_{bi} = [(7{,}335 + 0)^2 + 4\,(0 + 2{,}228)^2]^{0.5} = 8{,}582 \text{ psi.} = 8.6 \text{ ksi.}$$

Stress Ratios:

In order to meet the stress ratio requirement, the following relationship must hold for both normal and accident conditions.

$$R_t^2 + R_s^2 < 1$$

Where R_t is the ratio of average tensile stress to allowable average tensile stress, and R_s is the ratio of average shear stress to allowable average shear stress.

For normal conditions:

$$R_t = 7{,}335/62{,}700 = 0.117$$

$$R_s = 2{,}228/37{,}600 = 0.059$$

$$R_t^2 + R_s^2 = (0.117)^2 + (0.059)^2 = 0.017 < 1.$$

For accident conditions (using maximum normal condition loads):

$$R_t = 7{,}335/87{,}500 = 0.084$$

$$R_s = 2{,}228/52{,}500 = 0.042$$

$$R_t^2 + R_s^2 = (0.084)^2 + (0.042)^2 = 0.009 < 1.$$

A4A.8.7 Summary of Top neutron shield Cover Bolt Stresses

A summary of the stresses calculated above is listed in Table A4A.8-3.

A4A.9 FRACTURE TOUGHNESS

A4A.9.1 FRACTURE TOUGHNESS REQUIREMENTS OF THE CASK CONTAINMENT BOUNDARY

The TN-40HT cask material is a ferritic steel (penetration covers are stainless steel) and is therefore subject to fracture toughness requirements in order to assure ductile behavior at the lowest service temperature (LST) of –20 °F.

The design temperature of the TN-40HT cask is specified as -40°F. However, the brittle fracture evaluations were done for a -20°F operating temperature. The cask is shown to be able to withstand a -40°F environment but during operation, that is, any movement of the cask, the combination of loaded cask heat generation and actual ambient temperature is expected to maintain a temperature greater than -20°F for all cask containment material. This corresponds to the 10CFR71 practice of a -20°F minimum transportation temperature combined with a -40°F minimum material temperature.

The inner shell and bottom inner plate are fabricated from SA-203 Gr. E plate material, 1.5 inches thick. The shell flange is 4.6 inches thick, fabricated from SA-350 Gr. LF3 or SA-203 Gr. E material and the lid outer plate is 4.5 inches thick, fabricated from either SA-350 Gr. LF3 or SA-203 Gr. E material.

By interpolating between values provided in NUREG/CR-3826 (Reference 13) and NUREG/CR-1815 (Reference 14), the nil ductility transition temperatures (T_{NDT}) of the containment boundary materials are:

- Inner shell and bottom inner plates (1.5 in.): -80 °F
- Shell flange (4.6 in.): -137 °F
- Lid outer plate (4.5 in.): -125 °F

The 1.5 inch lid closure bolts are fabricated from SA-540 Grade B24 or B23, Class 1 material. All the lid closure bolt materials meet the ASME Code, Section III, Subarticle NB-2300 criteria.

All the material which forms the containment boundary meets the meets the fracture arrest criteria of Reference 13 or 14.

A4A.9.2 FRACTURE TOUGHNESS EVALUATION OF CASK COMPONENTS AND WELDS

The following sections document the fracture toughness evaluations of the non-containment boundary components as well as the containment boundary components.

A4A.9.3 METHODOLOGY

The allowable flaw sizes were determined using linear elastic fracture mechanics (LEFM) methodology from Section XI of the ASME Code (Reference 15). Flaws in the welds, if they occur, are welding defects, rather than initiated cracks. There is no active mechanism for crack initiation and growth at any of the weld locations since all the containment welds are volumetrically examined by RT and/or UT examination to assure no weld defects are present.

A4A.9.4 LOADINGS

Figure A4A.9-1 shows the selected locations on the cask numbered 1 through 10 for fracture toughness analysis. Stresses are linearized at these critical locations to determine maximum tensile membrane and bending stresses.

Table A4A.9-1 and Table A4A.9-2 list the maximum membrane and bending stresses at these selected locations under Normal and Accident Conditions of Storage.

A4A.9.5 MATERIAL FRACTURE TOUGHNESS

The shell flange is basically a forged cylinder, nominally 4.6 inches thick by 9 inches long, made from SA-350 Gr. LF-3 or SA-203 Gr. E material. The welding of the flange to the shell is performed using processes that meet ASME requirements so that fracture toughness properties are preserved. The lid outer plate is either a forged disc or a plate, nominally 4.5 inches thick with an 82.75 inch diameter, made from either SA-350 Gr. LF3 or SA-203 Gr. E material.

The electrodes used in the shell flange and lid outer plate weldments have high nickel content. The high alloy content of the electrodes and their typical usage in applications where good toughness is required indicate that the expected fracture toughness values for the weld filler material is as good as or better than that of the base material.

The shield shell is a plate or forged cylinder, nominally 7.25 inches thick by 166.4 inches long. The bottom shield is nominally 7.25 inches thick and 89.5 inches in diameter. These components are made from SA-266 Class 2 or SA-516 Gr. 70 material. Similarly, the 5.5 in. thick lid shield plate is made from SA-516 Gr. 70 or SA-105 material. The welding at the top flange and bottom plate is performed using processes that meet ASME requirements so that fracture toughness properties are preserved.

The fracture toughness values of these materials are enveloped by the low fracture toughness of the SA-266 forging material. Therefore, it is conservative to use fracture toughness of the SA-266 forging for the fracture toughness evaluations of the TN40-HT components.

Reference 16 is a very thorough review of the correlation between a range of ferritic steel material strength levels and Charpy impact energies.

Figure A4A.9-2 (reproduced from Figure 4-5 of Reference 16) corresponds to Charpy V-notch impact test results for a normalized SA-266 forging. The actual data points are shown along with a smoothed line that connects the average value at each test temperature. This data demonstrates that a lower bound Charpy impact value of 18 ft-lbs is appropriate for an exposure temperature of -20 °F. The various correlations between K_{ic} and K_{id} given in Table 4-2 of Reference 16 are compared at the 18 ft-lb level. Using the equation for yield strength of 36 to 50 ksi in transition in Table 4-2 of Reference 16, the Charpy impact measurement may be transformed into a fracture toughness value:

$$K_{id} = [5E(C_v)]^{1/2} = 50{,}289 \text{ psi-(in)}^{1/2} = 50 \text{ ksi-(in.)}^{1/2}$$

Where

K_{id} = Dynamic Fracture Toughness (based on crack arrest), ksi -(in)$^{1/2}$
E = Modulus of Elasticity, 28.1×10^6 psi (conservatively use 300 °F)
C_v = Charpy Impact Measurement, 18 ft-lbs

For conservatism, the above calculated K_{id} was reduced to 47 ksi-(in)$^{1/2}$ for fracture toughness evaluations of the TN-40HT cask components (containment and non-containment boundary) and welds.

A4A.9.6 FRACTURE TOUGHNESS CRITERIA

Using the rule of Section XI, IWB-3613 (Reference 15), the limiting fracture toughness values are reduced by a factor of $\sqrt{10}$ for the normal and $\sqrt{2}$ for the accident conditions, to define the limiting allowable $K_{allowable}$. That is,

$$K_{allowable} \leq K_{ia}/(\sqrt{10}) = 47/(\sqrt{10}) = 14.86 \text{ ksi-}\sqrt{\text{in}} \text{ for normal conditions}$$

$$K_{allowable} \leq K_{ic}/(\sqrt{2}) = 47/(\sqrt{2}) = 33.23 \text{ ksi-}\sqrt{\text{in}} \text{ for accident conditions}$$

Where:

K_{ia} = the available fracture toughness based on crack arrest for the corresponding crack tip temperature

K_{ic} = the available fracture toughness based on crack initiation for the corresponding crack tip temperature

However, because of the dynamic nature of loadings, it is appropriate to use K_{id} in place of K_{ia} and K_{ic}.

A4A.9.7 STRESS INTENSITY FACTOR CALCULATIONS

The total applied stress intensity K_I (applied) is determined from the membrane and bending stresses. For purposes of analysis, the postulated surface flaws are oriented in both the axial and circumferential directions. The surface crack depth is assumed as 15% of component thickness. However, the maximum crack depth is limited to ½ inch. The crack length is assumed to be 10 times the crack depth. The assumed crack sizes are such that they can be readily spotted by visual examination. Compared to surface cracks, the same size subsurface cracks are less critical. The results of the applied stress intensity K_I calculations for normal and accident conditions are shown in Table A4A.9-3 and Table A4A.9-4, respectively.

A4A.9.8 CONCLUSIONS

Based on the results of fracture analysis of TN-40HT cask components and welds with the postulated surface crack sizes, it is concluded that there is no potential of fracture failure due to normal or accident storage loadings. The postulated surface flaw sizes are such that they can be readily detected by a visual inspection.

Note that the shield shell is not part of the containment boundary. Cracks postulated in the shield shell will not propagate into the containment boundary due to the geometry of the cask. If the shield shell were to fracture along the length or around the circumference or along the weld between the shield shell and shell flange, there is no credible mechanism that would result in the shield shell separating from the inner shell. The lid shield plate is welded to the underside of the lid outer plate and is captured by the inner shell. If the weld were to completely fail, the shield plate would still remain inside the containment boundary and would not lose its shielding capability. Therefore, even if a fracture were to occur in the shield shell or the weld between the shield shell and shell flange or weld between lid shield plate and lid outer plate, there would be no safety significance, since confinement would be maintained, and shielding would remain in place. The one exception is in the region of the weld joining the shield shell to the bottom shield. In this region, if the weld were to completely fail, the bottom shield could become detached and reduce the shielding capability of the cask. However, the bottom trunnions are independently welded to the shield shell and the bottom shield and these additional attachment points (welds) would resist detachment of the bottom shield from the shield shell.

A4A.10 REFERENCES

1. ANSYS Engineering Analysis System, Users Manual for ANSYS Release 8.0.

2. John Harvey, "Theory and Design of Modern Pressure Vessel," Second Edition.

3. Stress Analysis of Closure Bolts for Shipping Casks, NUREG/CR-6007, April 1992.

4. Baumeister, T. Marks, L.S., Standard Handbook for Mechanical Engineers, 7th edition, McGraw Hill, 1967.

5. ASME Boiler and Pressure Vessel Code, Section II, Materials Specifications, Part D, 2004, through 2006 addenda.

6. Garlock Helicoflex Catalog, "High Performance Seals and Sealing Systems", Catalog Reference HEL 1.

7. Machinery Handbook, 26th Edition, Industrial Press, 2000.

8. Helicoil Catalog, Heli-Coil 8-Pitch Inserts.

9. ANSI N14.6-1986 "Special Lifting Devices for Shipping Containers Weighing 10,000 lb or more."

10. WRC Bulletin 107, March 1979, "Local Stresses in Spherical and Cylindrical Shells Due to External Loadings".

11. ASME Boiler and Pressure Vessel Code, Section III, Division 1, Subsections NB and NCA, 2004, through 2006 addenda.

12. ASME Boiler and Pressure Vessel Code, Section III, Division 1, Subsection NF, 2004 through 2006 Addenda.

13. NUREG/CR-3826, "Recommendations for Protecting against Failure by Brittle Fracture in Ferritic Steel Shipping Containers Greater than Four Inches Thick", April 1984.

14. NUREG/CR-1815, Recommendations for Protecting Against Failure by Brittle Fracture in Ferritic Steel Shipping Containers up to Four Inches Thick, August 1991.

15. American Society of Mechanical Engineers, ASME Boiler and Pressure Vessel Code Section V and Section XI, 2004, through 2006 addenda.

16. SIR-98-110, Rev. 0, "Allowable Flaw Evaluation of the Transnuclear TN-32 Cask", Structural Integrity Associates, Inc. 1998.

17. NUREG-612 "Control of Heavy Loads at Nuclear Power Plants", July 1980.

TABLE A4A.2-1
MECHANICAL PROPERTIES OF CASK BODY MATERIALS(1)(3)

Material Specification (Nominal Composition)	Application	Minimum Yield Strength S_y, psi	Minimum Ultimate Strength S_u, psi	Design Stress Value, psi(2)
ASME SA-350, Grade LF3 (3-½ Ni)	Shell flange, Lid outer plate	37,500	70,000	S_m = 23,300
ASME SA-203, Grade E (3-1/2 Ni)	Lid outer plate, Inner shell, Bottom inner plate	40,000	70,000	S_m = 23,300
ASME SA-266, Class 2 or SA-516 Gr. 70 (C-Si)	Shield shell, Bottom shield	36,000	70,000	S_m = 23,300
ASME SA-516, Gr. 70 or SA-105 (C-Mn-Si)	Outer shell Lid shield plate, Protective cover	36,000	70,000	S_m = 23,300
ASME SA-105 or SA-266 CL 2 or CL 4, (C-Si)	Lower and Upper Trunnions	36,000	70,000	S_m = 23,300
ASME SA-540 Gr. B24 or B23 CL 1 (2Ni-3/4 Cr-1/3 Mo)	Lid Bolts	150,000	165,000	S_m = 50,000
SA-193, Gr. B7	Vent / Drain port cover & Top neutron shield bolts	105,000	125,000	S_m = 35,000

Notes:
1. Mechanical properties listed are for metal temperatures up to 100 °F to provide a baseline comparison of all structural materials. Temperature dependent properties required for structural analysis are provided in Table A4.2-18.
2. Values listed are the stress parameters which form the basis for structural analysis acceptance criteria.
3. Data are taken from tables in ASME Section II, Part D, 2004 including 2006 Addenda, unless otherwise noted.

TABLE A4A.3-1
NORMAL AND HYPOTHETICAL ACCIDENT CONDITION INDIVIDUAL LOADS

Load Case No.	Individual Load Description
IL - 1	Bolt Preload and Lid Seating Pressure
IL - 2	Fabrication Stress
IL - 3	1g Down (Cask vertical, supported at bottom)
IL - 4	Internal Pressure (100 psi)
IL - 5	External Pressure (25 psi)
IL - 6	Thermal Stress Due to Hot Environment (100 °F ambient)
IL - 7	Thermal Stress Due to Cold Environment (–40 °F ambient)
IL - 8	3g on Top Trunnion Lifting Load (Calculating cask global stresses, Cask Vertical, 3g Up)
IL - 9	Bounding Loads for Seismic, Tornado and Flood (1g Lateral (resultant) + 2g Down)
IL-10	Trunnion Local Stress due to 3g Lifting

TABLE A4A.3-2
SUMMARY MAXIMUM NODAL STRESS INTENSITIES IN CASK COMPONENTS

(See Figure A4A.3-2 through Figure A4A.3-6 for component definition)

Load Number	Maximum Nodal Stress Intensity (ksi)							
	Inner Shell & Bottom Inner Plate	Shell Flange	Lid Outer Plate	Lid Shield Plate	Shield Shell	Bottom Shield	Top Trunnion Region	Bottom Trunnion Region
IL – 1 Bolt Pre-load	0.07	4.47	8.03	0.25	0.24	0.01	0.24	0.0
IL – 2 Fab.	15.11	12.11	1.43	0.73	7.11	4.20	5.01	7.11
IL – 3 Gravity 1g	0.08	0.11	0.07	0.07	0.08	0.08	0.03	0.08
IL – 4 Internal Pressure	2.40	3.69	2.12	2.24	1.97	5.62	0.69	1.97
IL – 5 External Pressure	0.60	0.92	0.53	0.56	0.49	1.41	0.17	0.49
IL – 6 Thermal 100°F	23.55	3.33	1.79	1.13	11.22	13.19	2.30	10.73
IL – 7 Thermal -40°F	25.08	3.33	1.77	1.03	12.59	14.45	2.29	12.11
IL – 8 Lifting 3G	3.92	1.39	1.32	0.50	4.39	6.98	1.85	2.23
IL – 9 Seismic	0.71	0.26	0.22	0.16	1.21	2.04	0.19	1.23
IL-10 Trunnion Local Stress	Trunnion local stresses due to 3g are provided in Section A4A.6							

TABLE A4A.4-1
BOLT SPECIFICATIONS AND DESIGN LOADS

Bolt	Bolt Size	Material	Design Loads
Lid Bolt	1.375 inch shank 1.5-8UN threads (tensile area = 1.492 in^2 (Reference 4))	SA540, Gr. B24 or B23, Cl. 1	1. Bolt Preload (1100-1150 ft-lbs) 2. Gasket seating load (1399 lb./in, Reference 6) 3. Pressure load (100 psig) 4. Temperature load (300 °F) 5. Bearing stress
Vent/Drain Cover Bolt	0.75 inch 10UNC (tensile area = 0.334 in^2 (Reference 4))	SA-193 B7	1. Bolt Preload (60-65 ft-lbs) 2. Gasket seating load (1142 lb./in, Reference 6) 3. Pressure load (100 psig) 4. Temperature load (300 °F)
Top Neutron Shield Bolt	1.25 inch 7UNC (tensile area = 0.969 in^2 (Reference 4))	A-193 B7	1. Bolt Preload (90-100 ft-lbs) 2. 3g vertical up 3. Temperature load (300 °F)

TABLE A4A.4-2
DESIGN PARAMETERS FOR LID CLOSURE BOLTS

D_b	Nominal diameter of closure bolt; 1.375 in.
K	Nut factor for empirical relation between the applied torque and achieved preload is 0.135 for neolube
Q	Applied torque for the preload (in.-lb.)
D_{lb}	Closure lid diameter at bolt circle, 79.31 in.
D_{is}	Closure lid diameter at the seal (inner) = 74.315 in
D_{lg}	Closure lid diameter at the seal (outer) = 75.882 in.
E_c	Young's modulus of cask wall material (SA-350, LF3, 300 °F), 26.7×10^6 psi. (Reference 5)
E_l	Young's modulus of lid material (SA-350, LF3, 300 °F), 26.7×10^6 psi. (Reference 5)
N_b	Total number of closure bolts, 48
N_{ul}	Poisson's ratio of closure lid, 0.3, (Reference 4, p. 5-6 use nominal value).
P_{ei}	Inside pressure of cask, 100 psig.
D_{lo}	Closure lid diameter at outer edge, 82.75 in.
P_{li}	Pressure inside the closure lid, 100 psig.
t_c	Thickness of cask wall, 8.8 in.
t_l	Thickness of lid, 10.0, 4.5 in.
l_b	Thermal coefficient of expansion, bolt (SA-540, Gr B24), 6.4×10^{-6} at R.T., 6.9×10^{-6} in. in.$^{-1}$ °F^{-1} at 300 °F (Reference 5)
l_c	Thermal coefficient of expansion, cask (SA-350, LF3) 6.4×10^{-6} at R.T., 6.9×10^{-6} in. in.$^{-1}$ °F^{-1} at 300 °F (Reference 5)
l_l	Thermal coefficient of expansion, lid (SA-350, LF3) 6.4×10^{-6} R.T., 6.9×10^{-6} in. in.$^{-1}$ °F^{-1} at 300 °F (Reference 5)
E_b	Young's modulus of bolt material (SA-540, B24, 300 °F), 26.7×10^6 psi. (Reference 5)
LF	A factor to account for any difference between the rigid body acceleration and the acceleration of the contents and closure lid = 1.1
S_{yl}	Yield strength of closure lid material (SA-350, LF3, 300 °F), 33,200 psi. (Reference 5)
S_{ul}	Ultimate strength of closure lid (SA-350, LF3, 300 °F), 70,000 psi. (Reference 5)
S_{yb}	Yield strength of lid bolt material (see Table A4A.4-3)
S_{ub}	Ultimate strength of lid bolt material (see Table A4A.4-4)
P_{lo}	Pressure outside the lid
L_b	Bolt length between the top and bottom surfaces of closure, 4.5 in.

TABLE A4A.4-3
ALLOWABLE STRESSES IN LID CLOSURE BOLTS FOR NORMAL CONDITIONS

Temperature (°F)	Yield Stress[1] (ksi)	Normal Condition Allowables		
		F_{tb} [2, 4] (ksi)	F_{vb} [3, 4] (ksi)	$S.I.$ [5] (ksi)
70	150.0	100.0	60.0	135.0
200	144.0	96.0	57.6	129.6
300	140.3	93.5	56.1	126.3
400	137.9	91.9	55.2	124.1

Notes:
1. Yield stress values are from Reference 5
2. Allowable Tensile stress, $F_{tb} = 2/3\ S_y$ (Reference 3, Table 6.1)
3. Allowable shear stress, $F_{vb} = 0.4\ S_y$ (Reference 3, Table 6.1)
4. Tension and shear stresses must be combined using the following interaction equation:

$$\frac{\sigma_{tb}^2}{F_{tb}^2} + \frac{\tau_{yb}^2}{F_{yb}^2} \leq 1.0 \text{ (Reference 3)}$$

5. Stress intensity from combined tensile, shear and residual torsion loads, $S.I. \leq 0.9\ S_y$ (Reference 3, Table 6.1)

TABLE A4A.4-4
ALLOWABLE STRESSES IN LID CLOSURE BOLTS FOR ACCIDENT CONDITIONS

Temperature (°F)	Yield Stress[1] (ksi)	Accident Condition Allowables		
		0.6 S_y [3] (ksi)	F_{tb} [2, 4] (ksi)	F_{vb} [3, 4] (ksi)
100	150.0	90.0	115.5	69.3
200	144.0	86.4	115.5	69.3
300	140.3	84.2	115.5	69.3
400	137.9	82.7	115.5	69.3

Notes:
1. Yield and tensile stress values are from Reference 5, Note that S_u is 165 ksi at all temperatures of interest
2. Allowable Tensile stress, F_{tb} = MINIMUM (0.7 S_u, S_y), where 0.7 S_u = 0.7 (165.0) = 115.5 ksi. (Reference 3, Table 6.3)
3. Allowable shear stress, F_{vb} = MINIMUM (0.42 S_u, 0.6 S_y), where 0.42 S_u = 0.42 (165.0) = 69.3 ksi. (Reference 3, Table 6.3)
4. Tension and shear stresses must be combined using the following interaction equation:

$$\frac{\sigma_{tb}^2}{F_{tb}^2} + \frac{\tau_{yb}^2}{F_{yb}^2} \leq 1.0 \text{ (Reference 3)}$$

TABLE A4A.4-5
LID BOLT INDIVIDUAL LOAD SUMMARY

Load Case	Applied Load		Non-Prying Tensile Force, F_a (lb.)	Torsional Moment, M_t (in. lb.)	Prying Force, F_f (lb.in.$^{-1}$)	Prying Moment, M_f (in. lb. in.$^{-1}$)
Preload	Residual	Maximum Torque	74,343	6,900	0	0
		Minimum Torque	71,111	6,600	0	0
Gasket	Seating Load		13,753	0	0	0
Internal Pressure	100 psig Internal		9,422	0	1,983	19,656
Thermal	300° F		0	0	0	0

TABLE A4A.4-6
LID BOLT LOAD COMBINATIONS

Load Case	Combination Description		Non-Prying Tensile Force, F_a (lb.)	Torsional Moment, M_t (in. lb.)	Prying Force, F_f (lb.in.$^{-1}$)	Prying Moment, M_f (in. lb. in.$^{-1}$)
1.	Preload + Temperature (Normal Condition)	A. Maximum Torque	74,343	6,900	0	0
		B. Minimum Torque	71,111	6,600	0	0
2.	Gasket Seating Load + Internal Pressure		23,175	0	1,983	19,656

TABLE A4A.4-7
LID BOLT STRESS SUMMARY

Stress Type	Normal Condition		Accident Condition	
	Stress	Allowable	Stress	Allowable
Average Tensile (ksi)	50.1	93.5	50.1	115.5
Shear (ksi)	13.5	56.1	13.5	69.3
Combined stress intensity (ksi)	57.8	126.3	Not Required (Reference 3)	
Interaction Eq. $R_t^2 + R_s^2 < 1$	0.345	1	0.226	1
Bearing (ksi)	32.2	33.2	Not Required (Reference 3)	

TABLE A4A.5-1
ALLOWABLE STRESSES IN VENT/DRAIN, AND TOP NEUTRON SHIELDBOLTS FOR NORMAL CONDITIONS

Temperature (°F)	Yield Stress[1] (ksi)	Normal Condition Allowables		
		F_{tb} [2, 4] (ksi)	F_{vb} [3, 4] (ksi)	$S.I.$ [5] (ksi)
70	105.0	70.0	42.0	94.5
200	98.0	65.3	39.2	88.2
300	94.1	62.7	37.6	84.7
400	91.5	61.0	36.6	82.4

Notes:
1. Yield stress values are from Reference 5
2. Allowable Tensile stress, $F_{tb} = 2/3\ S_y$ (Reference 3, Table 6.1)
3. Allowable shear stress, $F_{vb} = 0.4\ S_y$ (Reference 3, Table 6.1)
4. Tension and shear stresses must be combined using the following interaction equation:

$$\frac{\sigma_{tb}^2}{F_{tb}^2} + \frac{\tau_{yb}^2}{F_{yb}^2} \leq 1.0 \text{ (Reference 3)}$$

5. Stress intensity from combined tensile, shear and residual torsion loads, $S.I. \leq 0.9\ S_y$ (Reference 3, Table 6.1)

TABLE A4A.5-2
ALLOWABLE STRESSES IN VENT/DRAIN, AND TOP NEUTRON SHIELDBOLTS FOR ACCIDENT CONDITIONS

Temperature (°F)	Yield Stress[1] (ksi)	Accident Condition Allowables		
		0.6 S_y [3] (ksi)	F_{tb} [2, 4] (ksi)	F_{vb} [3, 4] (ksi)
100	105.0	63.0	87.5	52.5
200	98.0	58.8	87.5	52.5
300	94.1	56.5	87.5	52.5
400	91.5	54.9	87.5	52.5

Notes:
1. Yield and tensile stress values are from Reference 5, Note that S_u is 125 ksi at all temperatures of interest
2. Allowable Tensile stress, F_{tb} = MINIMUM (0.7 S_u, S_y), where 0.7 S_u = 0.7 (125.0) = 87.5 ksi. (Reference 3, Table 6.3)
3. Allowable shear stress, F_{vb} = MINIMUM (0.42 S_u, 0.6 S_y), where 0.42 S_u = 0.42 (125.0) = 52.5 ksi. (Reference 3, Table 6.3)
4. Tension and shear stresses must be combined using the following interaction equation:

$$\frac{\sigma_{tb}^2}{F_{tb}^2} + \frac{\tau_{yb}^2}{F_{yb}^2} \leq 1.0 \text{ (Reference 3)}$$

TABLE 4A.5-3
VENT AND DRAIN COVER BOLT INDIVIDUAL LOAD SUMMARY

Load Case	Applied Load		Non-Prying Tensile Force, F_a (lb.)	Torsional Moment, M_t (in. lb.)	Prying Force, F_f (lb.in.$^{-1}$)	Prying Moment, M_f (in.lb.in.$^{-1}$)
Preload	Residual	Maximum Torque	7,704	390	0	0
		Minimum Torque	7,111	360	0	0
Gasket	Seating Load		4,740	0	0	0
Internal Pressure	100 psig Internal		318	0	185	170
Thermal	300° F		6,544	0	0	0

TABLE A4A.5-4
VENT AND DRAIN COVER BOLT LOAD COMBINATIONS

Load Case	Combination Description		Non Prying Tensile Force, F_a (lb.)	Torsional Moment, M_t (in. lb.)	Prying Force, F_f (lb.in.$^{-1}$)	Prying Moment, M_f (in.lb.in.$^{-1}$)
1.	Preload + Temperature (Normal Condition)	A. Maximum Torque	14,248	390	0	0
		B. Minimum Torque	13,655	360	0	0
2.	Gasket Seating Load + Internal Pressure		5,058	0	185	170

TABLE A4A.5-5
VENT AND DRAIN COVER BOLT STRESS SUMMARY

Stress Type	Normal Condition		Accident Condition	
	Stress	Allowable	Stress	Allowable
Average Tensile (ksi)	42.7	62.7	42.7	87.5
Shear (ksi)	7.6	37.6	7.6	52.5
Combined Stress Intensity (ksi)	51.8	84.7	Not Required (Reference 3)	
Interaction Eq. $R_t^2 + R_s^2 < 1$	0.504	1	0.259	1

TABLE A4A.6-1
SUMMARY OF UPPER TRUNNION STRESSES (YIELD STRENGTH CASE)

6/3g Load	Upper Trunnion (3g/Trunnion)	
Trunnion Location	AA	BB
Stress Area (in^2)	113.9	79.8
Area Moment of Inertia (in^4)	3,082.0	755.6
Shear Force (lb)	750,000	750,000
Applied Moment (in lb)	5,062,500	1,590,000
Shear Stress (psi)	6,586	9,402
Bending Stress (psi)	13,962	11,837
Stress Intensity (psi)	19,195	22,220
Allowable Stress (psi)	31,800	31,800

TABLE A4A.6-2
SUMMARY OF UPPER TRUNNION STRESSES (ULTIMATE STRENGTH CASE)

10g Load	Upper Trunnion (5g/Trunnion)	
Trunnion Location	AA	BB
Stress Area (in^2)	113.9	79.8
Area Moment of Inertia (in^4)	3082.0	755.6
Shear Force (lb)	1,250,000	1,250,000
Applied Moment (in lb)	8,437,500	2,650,000
Shear Stress (psi)	10,976	15,671
Bending Stress (psi)	23,271	19,728
Stress Intensity (psi)	31,991	37,033
Allowable Stress(psi)	70,000	70,000

TABLE A4A.6-3
UPPER TRUNNION SHIELD SHELL LOCAL STRESS SUMMARY FOR 3G LIFTING LOAD

Location	Upper Trunnions, 3g Longitudinal Load (T = 300°F)			
	Stress Intensity (ksi) P_L	Allowable 1.5 *Sm* (ksi) (Reference 11)	Stress Intensity (ksi) $P_L + P_b + Q$	Allowable 3.0 *Sm* (ksi) (Reference 11)
Outside edge of shield shell.	4.834 + 1.97[1] = 6.804	31.8	8.072 + 1.97[1] + 12.59[1] = 22.632	63.6
Inside edge of shield shell.	4.834+ 1.97[1] = 6.804	31.8	7.511 + 1.97[1] + 12.59[1] = 22.071	63.6

1. Note that bounding internal pressure and thermal stress values are taken from Table A4A.3-2.

TABLE A4A.6-4
UPPER TRUNNION LOCAL STRESS DUE TO 3G LONGITUDINAL LIFTING LOAD

3g Lifting Load

Trunnion Loading		Geometry		Cask Loading							
Cask Weight lb	250000	Gamma Shield Thickness (in)	5.810	Longitudinal g	3						
		Mean Radius (in)	40.405	Vertical g	0						
Moment Arm (in)	9.66	Trunnion Outer Radius (in)	8.500	Lateral g	0						
Circumfrential Trunnion Moment Mc (in lb)	0	Geometry Factor Gamma	6.954								
Longitudinal Trunnion Moment ML (in lb)	-3622500	Geometry Factor Beta	0.184								
Torsional Trunnion Moment Mt (in lb)	0										
P (lb)	0										
Circumfrential Loading Vc (lb)	0										
Longitudinal Loading VL (lb)	-375000										
Reference Figure	**Reference Curve from Fig**	**Multiplier**	**Absolute Stress (psi)**	**Au**	**Al**	**Bu**	**Bl**	**Cu**	**Cl**	**Du**	**Dl**
3c or 4c	0	0.000	0.0	0.0	0.0	0.0	0.0	0.0	0.0	0.0	0.0
1c or 2c-1	0	0.000	0.0	0.0	0.0	0.0	0.0	0.0	0.0	0.0	0.0
3a	0	0.000	0.0					0.0	0.0	0.0	0.0
1a	0	0.000	0.0					0.0	0.0	0.0	0.0
3b	0.5	-2074.771	-1037.4	1037.4	1037.4	-1037.4	-1037.4				
1b or 1b-1	0.058	-86572.588	-5021.2	5021.2	-5021.2	-5021.2	5021.2				
Summation of Phi Stress				6058.6	-3983.8	-6058.6	3983.8	0.0	0.0	0.0	0.0
3c or 4c	0	0.000	0.0	0.0	0.0	0.0	0.0	0.0	0.0	0.0	0.0
1c-1 or 2c	0	0.000	0.0	0.0	0.0	0.0	0.0	0.0	0.0	0.0	0.0
4a	0	0.000	0.0					0.0	0.0	0.0	0.0
2a	0	0.000	0.0					0.0	0.0	0.0	0.0
4b	0.135	-2074.771	-280.1	280.1	280.1	-280.1	-280.1				
2b or 2b-1	0.09	-86572.588	-7791.5	7791.5	-7791.5	-7791.5	7791.5				
Summation of Chi Stress				8071.6	-7511.4	-8071.6	7511.4	0.0	0.0	0.0	0.0
	Torsional Shear Stress	0.0		0.0	0.0	0.0	0.0	0.0	0.0	0.0	0.0
	Circumfrential Shear Stress	0.0		0.0	0.0	0.0	0.0				
	Longitudinal Shear Stress	-2417.1						2417.1	2417.1	-2417.1	-2417.1
Summation of Tau Stress				0.0	0.0	0.0	0.0	2417.1	2417.1	-2417.1	-2417.1
Stress Intensity Root 1				8071.6	3983.8	6058.6	7511.4	2417.1	2417.1	2417.1	2417.1
Stress Intensity Root 2				6058.6	7511.4	8071.6	3983.8	2417.1	2417.1	2417.1	2417.1
Stress Intensity Root 3				2013.0	3527.6	2013.0	3527.6	4834.1	4834.1	4834.1	4834.1
Max Stress Intensity	8071.6										
Membrane Stress Intensity Root 1				1037.4	1037.4	280.1	280.1	2417.1	2417.1	2417.1	2417.1
Membrane Stress Intensity Root 2				280.1	280.1	1037.4	1037.4	2417.1	2417.1	2417.1	2417.1
Membrane Stress Intensity Root 3				757.3	757.3	757.3	757.3	4834.1	4834.1	4834.1	4834.1
Max Membrane Stress Intensity	4834.1										

Table A4A.7-1
Maximum Stress Intensities for Each Loading Condition

LOADING CONDITION	Max. Stress Intensity (ksi)	Allowable (ksi)	Factor of Safety
25 psig internal pressure	4.92	33.6	6.83
25 psig internal pressure + 3g inertia load (Cask in Vertical Orientation)	7.04	33.6	4.77

Table A4A.7-2
Stress at Weld Locations

Weld Location (Figure 3.10.3-1)	Max. Stress Intensity (ksi)
25 psig Internal Pressure	
Location 1	1.70
Location 2	4.92
Location 3	4.69
Location 4	1.65
25 psig Internal Pressure + 3g inertia load	
Location 1	5.27
Location 2	7.04
Location 3	2.67
Location 4	3.37
25 psig Internal Pressure + 3g Downward Load	
Location 1	2.86
Location 2	5.78
Location 3	5.50
Location 4	2.79

Note: All the stresses are less than the allowable stress of 21.00 ksi.

TABLE A4A.8-1
TOP NEUTRON SHIELD COVER BOLT INDIVIDUAL LOAD SUMMARY

Load Case	Applied Load		Non-Prying Tensile Force, F_a (lb.)	Torsional Moment, M_t (in. lb.)	Prying Force, F_f (lb.in.$^{-1}$)	Prying Moment, M_f (in.lb.in.$^{-1}$)
Preload	Residual	Maximum Torque	7,111	600	0	0
		Minimum Torque	6,400	540	0	0
Thermal	300 °F		0	0	0	0
Acceleration	3g Vertical		1,485	0	0	0

TABLE A4A.8-2
TOP NEUTRON SHIELD COVER BOLT LOAD COMBINATIONS

Load Case	Combination Description		Non-Prying Tensile Force, F_a (lb.)	Torsional Moment, M_t (in. lb.)	Prying Force, F_f (lb.in.$^{-1}$)	Prying Moment, M_f (in.lb.in.$^{-1}$)
1.	Preload + Temperature (Normal Condition)	A. Maximum Torque	7,111	600	0	0
		B. Minimum Torque	6,400	540	0	0
2.	Acceleration Loads		1,485	0	0	0

TABLE A4A.8-3
TOP NEUTRON SHIELD COVER BOLT STRESS SUMMARY

Stress Type	Normal Condition		Accident Condition	
	Stress	Allowable	Stress	Allowable
Average Tensile (ksi)	7.3	62.7	7.3	87.5
Shear (ksi)	2.2	37.6	2.2	52.5
Combined Stress Intensity (ksi)	8.6	84.7	Not Required (Reference 3)	
Interaction E.Q. $R_t^2 + R_s^2 < 1$	0.017	1	0.009	1

TABLE A4A.9-1
SUMMARY LINEARIZED STRESS COMPONENTS - NORMAL CONDITION

Cask Location from FIGURE A4A.9-1	Max. Stress Type(1)	Membrane Stress (ksi)			Bending Stress (ksi)		
		S_X (Rad.)	S_Y (Tang.)	S_Z (Axial)	S_X (Rad.)	S_Y (Tang.)	S_Z (Axial)
1. Weld	S_Y (N6)	1.74	3.61	0.38	2.65	1.73	2.40
	S_Z (N6)	1.76	3.26	0.38	2.65	1.75	2.59
2. Weld	S_Y (N5)	-0.30	1.46	-0.70	0.23	0.14	0.01
	S_Z (N5)	-0.20	1.53	-0.54	0.22	0.11	0.04
3. Weld	$S_{Y,Z}$ (N3)	1.0	1.06	0.19	0.04	0.09	0.22
4. Bottom Shield	S_X, (N5)	1.89	3.38	-0.22	4.52	1.15	0.84
	S_Y (N5)	2.05	3.55	0.27	4.41	1.54	0.57
	S_Z (N5)	0.37	3.45	0.62	1.51	0.48	1.21
5. Shield Shell-Mid	S_Y,(N4)	-0.30	2.82	0.61	0.27	1.34	2.00
	S_Z (N4)	-0.30	2.88	1.35	0.29	0.82	1.66
6. Shield Shell-End	S_Y(N4)	2.18	4.57	0.87	6.99	2.41	0.03
	S_Z (N4)	2.07	4.06	0.91	7.01	2.35	0.06
7. Shell Flange	S_X (N4)	1.66	0.38	-3.18	3.73	3.24	7.80
	S_Y (N4)	-0.44	1.85	2.52	0.59	0.85	2.31
	S_Z (N4)	-0.44	1.69	2.55	0.61	0.79	2.29
8. Shield Plate	S_X (N3)	-0.07	0.65	0.17	0.12	0.37	0.12
	S_Y (N3)	-0.06	0.58	0.13	0.10	0.48	0.12
	S_Z (N3)	-0.06	0.65	0.17	0.12	0.38	0.12
9. Lid Outer Plate	S_X (N5)	0.17	0.91	-0.17	1.33	0.41	0.06
	$S_{Y,Z}$ (N5)	0.13	1.01	0.37	1.09	0.41	0.43
10. Inner Shell & Bottom Inner Plate	S_X (N5)	-0.04	-3.02	-4.72	1.05	2.40	7.69
	S_Y (N5)	-9.82	-3.42	-0.26	2.95	3.46	7.23
	S_Z (N5)	-13.04	-4.30	-0.10	2.21	1.51	5.64

1. S_X – Radial Stress S_Y – Tangential Stress S_Z – Axial Stress

TABLE A4A.9-2
SUMMARY LINEARIZED STRESS COMPONENTS – ACCIDENT CONDITION

Cask Location from Figure A4A.9-1	Max. Stress Type[1]	Membrane Stress (ksi)			Bending Stress (ksi)		
		S_X (Rad.)	S_Y (Tang.)	S_Z (Axial)	S_X (Rad.)	S_Y (Tang.)	S_Z (Axial)
1. Weld	S_Y(A2)	0.09	-0.63	-4.92	0.01	0.16	0.60
	S_Z (A2)	0.09	-0.63	-4.92	0.01	0.16	0.60
2. Weld	S_Y(A4)	-0.10	0.43	-0.32	0.13	0.03	0.03
	S_Z(A4)	-0.10	-0.36	-0.31	0.13	0.0	0.03
3. Weld	S_Y(A3)	0.51	0.41	1.06	0.24	0.43	1.19
	S_Z(A3)	0.52	0.42	1.09	0.25	0.46	1.29
4. Bottom Shield	S_X(A4)	0.45	0.64	0.49	2.80	0.78	0.63
	S_Y(A4)	0.44	0.53	-0.04	1.82	2.01	0.16
	S_Z(A4)	-0.14	0.76	1.37	1.49	0.72	1.66
5. Shield Shell-Mid	S_Y(A4)	-0.25	3.08	0.74	0.28	0.38	0.06
	S_Z(A4)	-0.26	3.04	0.90	0.28	0.25	0.0
6. Shield Shell-End	S_Y(A4)	1.64	1.12	1.23	2.54	1.76	3.37
	S_Z(A4)	1.18	0.56	0.36	1.24	1.51	4.26
7. Shell Flange	S_X(A3)	1.48	0.09	-2.95	3.67	3.42	8.34
	S_Y(A3)	1.47	0.90	-2.96	3.67	3.42	8.34
	S_Z(A3)	-0.22	0.85	2.18	1.11	0.85	2.55
8. Shield Plate	S_X,S_Y(A3)	0.79	0.79	-0.02	3.36	3.36	0.10
	S_Z(A3)	0.16	0.60	0.13	0.34	0.28	0.91
9. Lid Outer Plate	S_X(A4)	0.47	0.54	-0.19	1.78	0.35	0.0
	S_Y(A4)	0.72	0.72	-0.02	1.48	1.48	0.10
	S_Z(A4)	0.42	0.71	0.38	1.42	0.32	0.43
10. Inner Shell & Bottom Inner Plate	S_X(A3)	8.40	2.36	-2.17	4.10	2.48	3.65
	S_Y(A3)	8.40	2.36	-2.17	4.10	2.48	3.65
	S_Z (A3)	-2.43	-1.99	-4.46	0.67	2.55	7.91

1. S_X – Radial Stress S_Y – Tangential Stress S_Z – Axial Stress

TABLE A4A.9-3
SUMMARY STRESS INTENSITY FACTORS FOR NORMAL CONDITION

Component	Thick. t (in)	Crack depth, a (in)	Crack length, l (in)	Max. Stress Type(1)	Critical Crack Direction(1)	Stress Intens. Factor (ksi-√in)	Allow. Stress Intens. Factor (ksi-√in)	Factors of Safety
1. Weld	1.50	0.225	2.25	S_Y	Axial	4.64	14.86	3.20
2. Weld	1.00	0.150	1.50	S_Y	Axial	1.30	14.86	>10
3. Weld	0.75	0.1125	1.125	S_Y	Axial	0.80	14.86	>10
4. Bottom Shield	7.25	0.500	5.00	S_X	Tangential	8.61	14.86	1.73
5. Shield Shell-Mid	7.25	0.500	5.00	S_Y	Axial	5.64	14.86	2.64
6. Shield Shell End	7.25	0.500	5.00	S_Y	Axial	9.31	14.86	1.60
7. Shell Flange	4.6	0.500	5.00	S_Z	Hoop	9.32	14.86	1.59
8. Shield Plate	5.5	0.500	5.00	S_Y	Axial	1.69	14.86	9.27
9. Lid Outer Plate	4.5	0.500	5.00	S_Y	Axial	2.0	14.86	7.45
10. Inner Shell & Bottom Inner Plate	1.5	0.225	2.25	S_Z	Hoop	5.88	14.86	2.53

1. S_Y – Hoop Stress – Results in Axial crack S_Z – Axial Stress – Results in Hoop crack

   S_X – Radial Stress – Results in Tangential crack

TABLE A4A.9-4
SUMMARY STRESS INTENSITY FACTORS FOR ACCIDENT CONDITION

Component	Thick. t (in)	Crack depth, a (in)	Crack length, l (in)	Max. Stress Type(1)	Critical Crack Direction(1)	Stress Intens. Factor (ksi-√in)	Allow. Stress Intens. Factor (ksi-√in)	Factors of Safety
1. Weld	1.50	0.225	2.25	S_Z	Hoop	0.54	33.23	>10
2. Weld	1.00	0.150	1.50	S_Y	Axial	0.41	33.23	>10
3. Weld	0.75	0.1125	1.125	S_Z	Hoop	1.40	33.23	>10
4. Bottom Shield	7.25	0.500	5.00	S_X	Tangential	4.25	33.23	7.82
5. Shield Shell-Mid	7.25	0.500	5.00	S_Y	Axial	4.68	33.23	7.10
6. Shield Shell-End	7.25	0.500	5.00	S_Z	Hoop	7.15	33.23	4.65
7. Shell Flange	4.6	0.500	5.00	S_Z	Hoop	13.00	33.23	2.56
8. Shield Plate	5.5	0.500	5.00	S_X	Tangential	5.20	33.23	6.40
9. Lid Outer Plate	4.5	0.500	5.00	S_X	Tangential	3.22	33.23	>10
10. Inner Shell & Bottom Inner Plate	1.5	0.225	2.25	S_X	Tangential	10.89	33.23	3.05

1 S_Y – Hoop Stress – Results in Axial crack S_Z – Axial Stress – Results in Hoop crack

S_X – Radial Stress – Results in Tangential crack

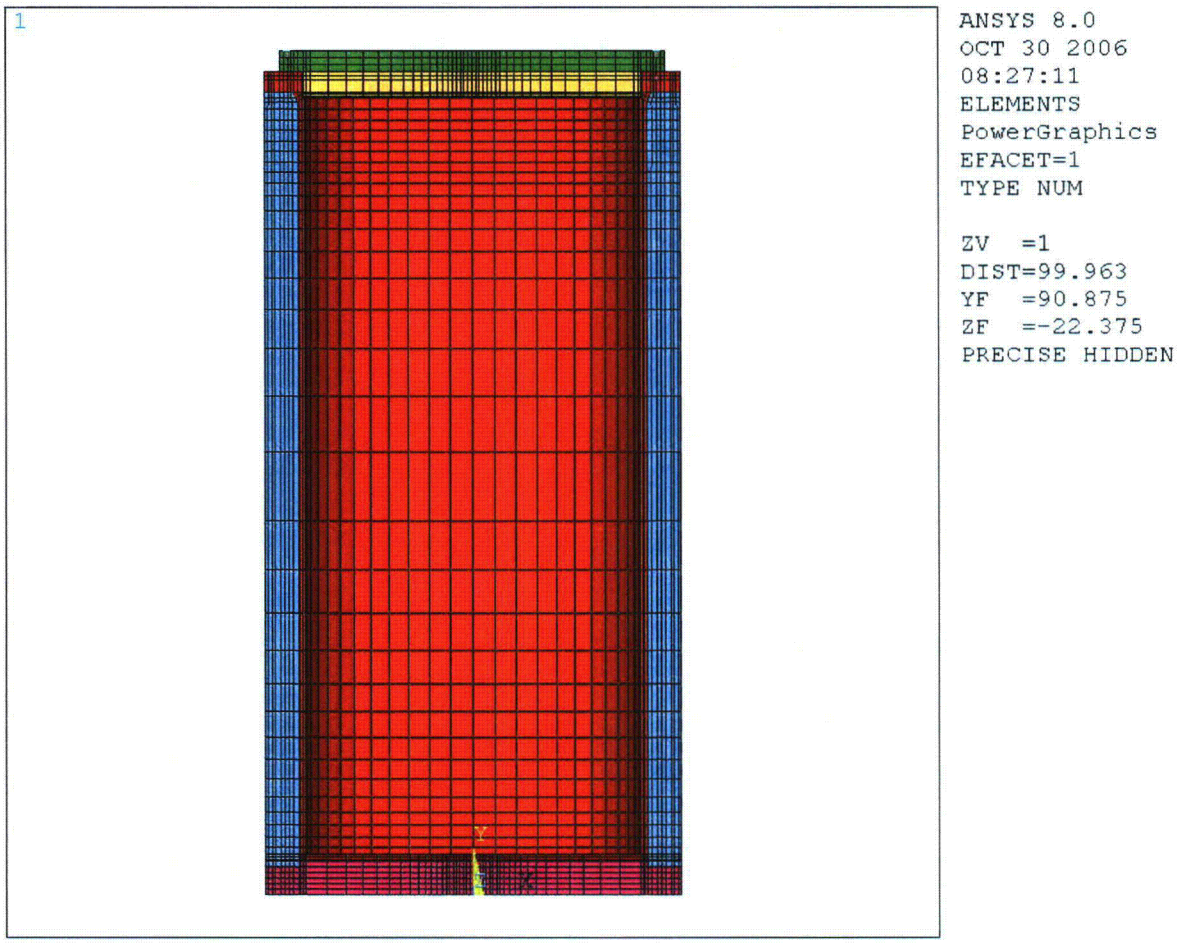

FIGURE A4A.3-1
TN-40HT STORAGE CASK FEM REPRESENTATION

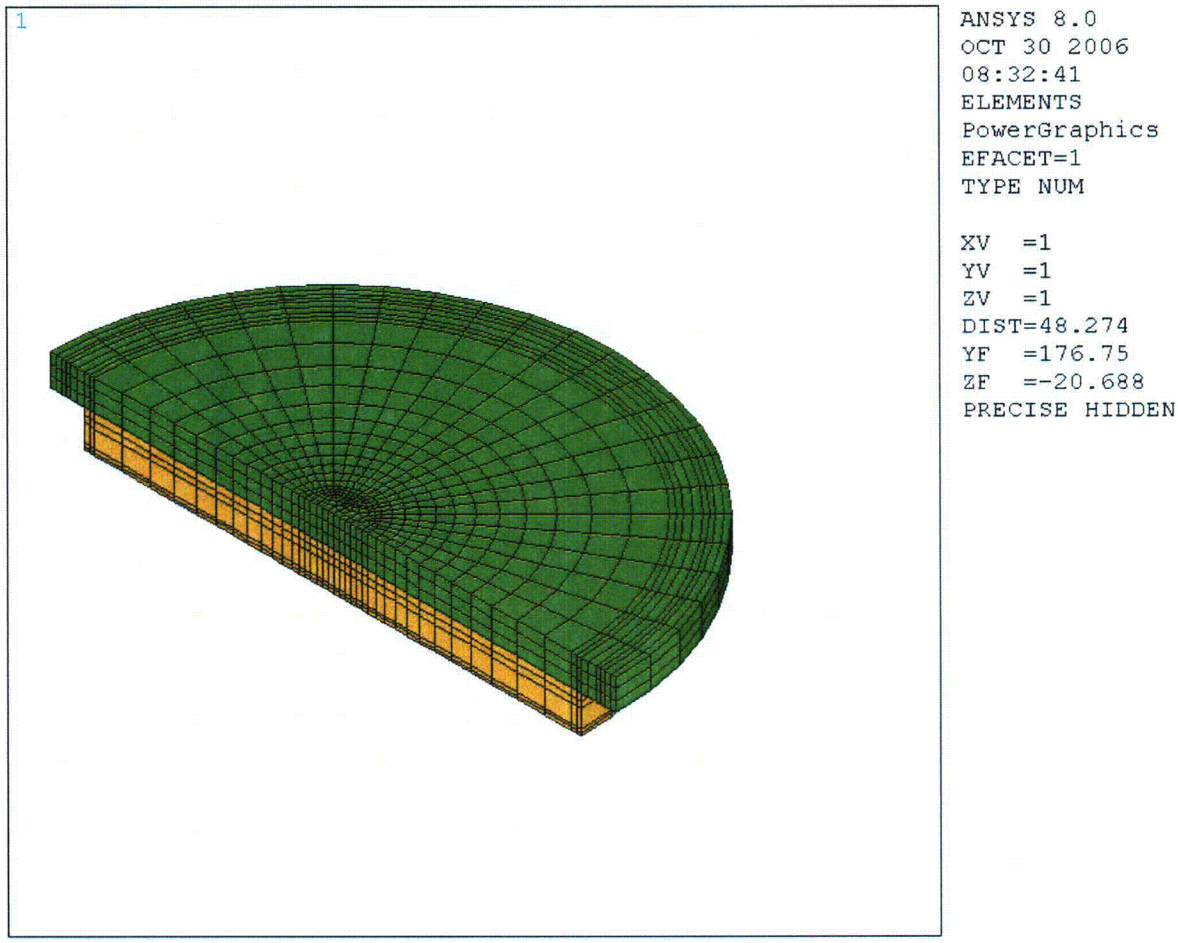

FIGURE A4A.3-2
FINITE ELEMENT MODEL—LID OUTER PLATE AND SHIELD PLATE

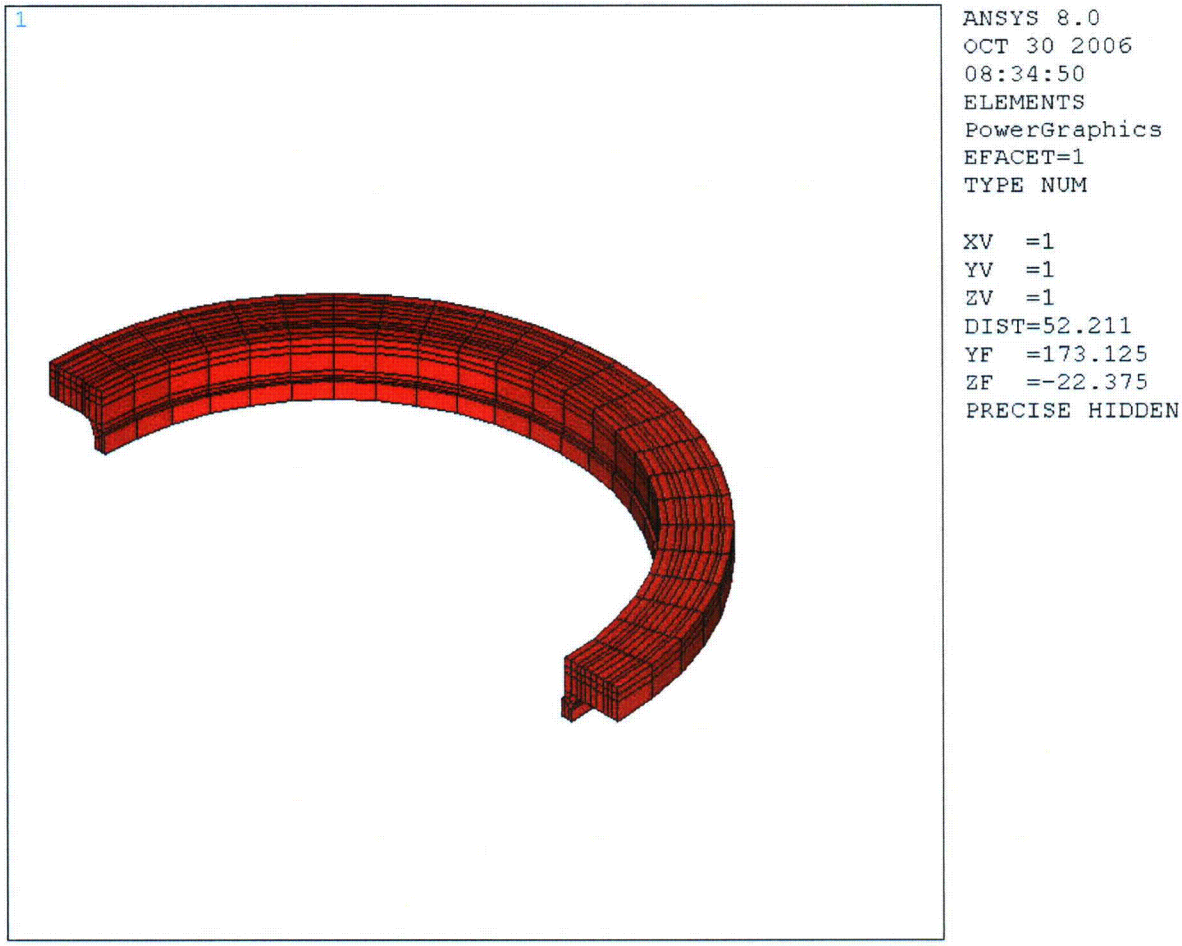

FIGURE A4A.3-3
FINITE ELEMENT MODEL – SHELL FLANGE

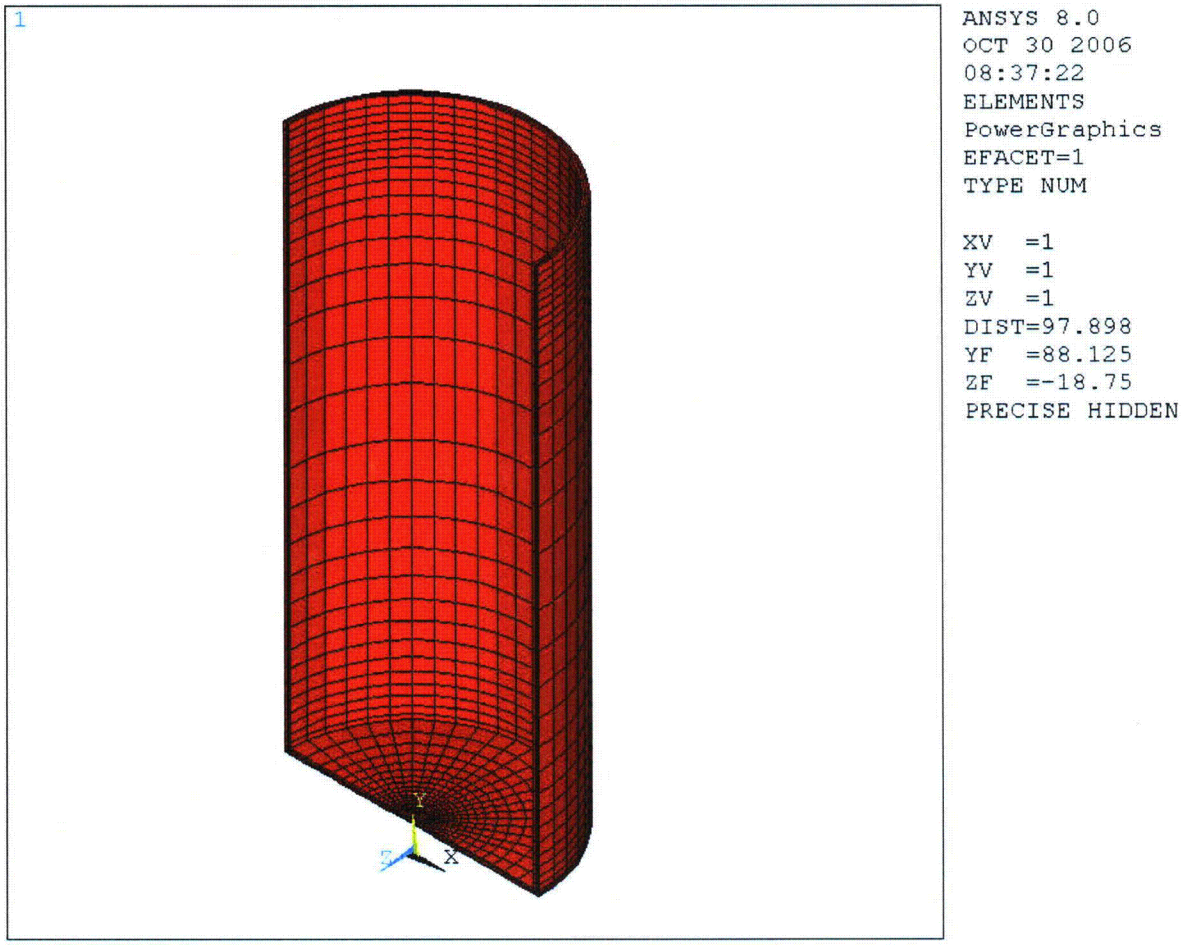

FIGURE A4A.3-4
FINITE ELEMENT MODEL – INNER SHELL AND BOTTOM INNER PLATE

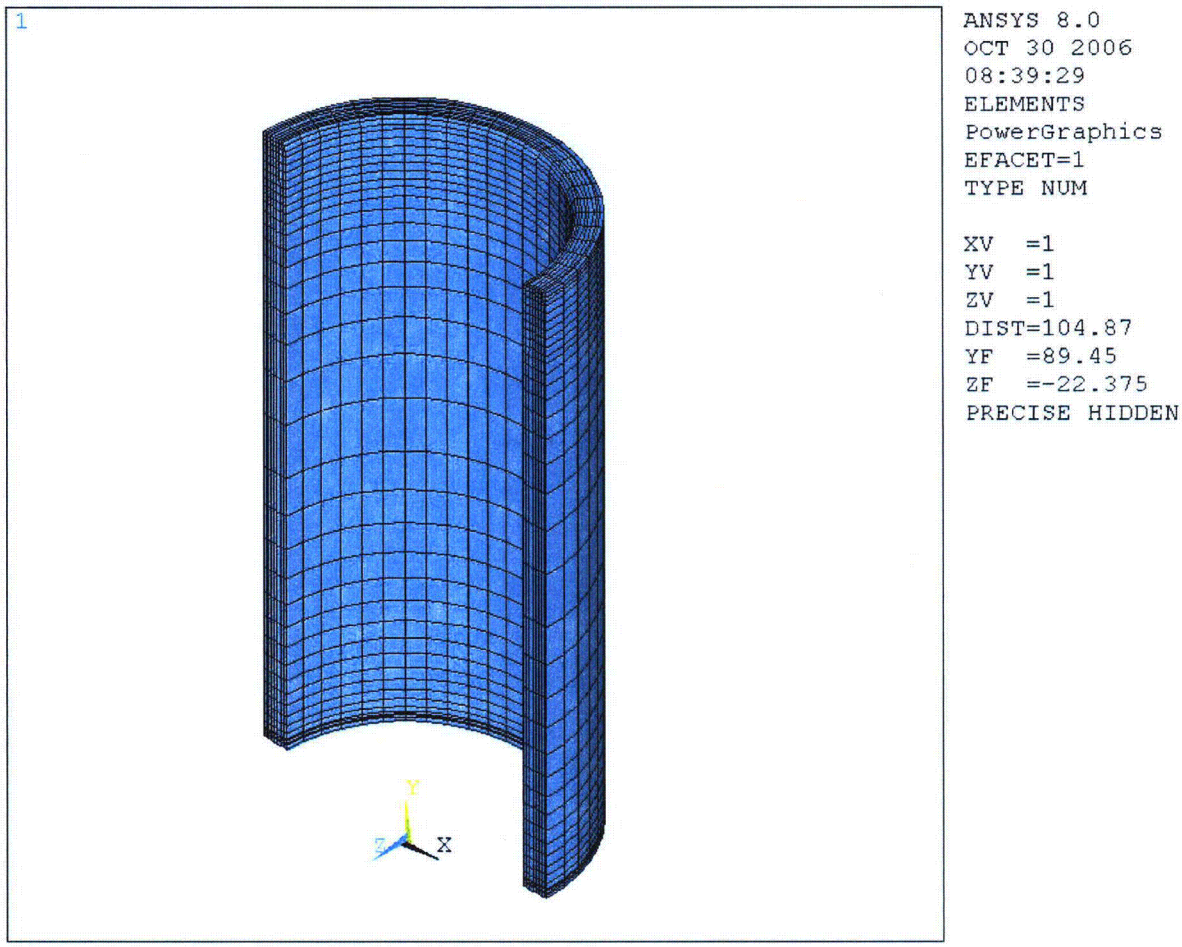

FIGURE A4A.3-5
FINITE ELEMENT MODEL – SHIELD SHELL

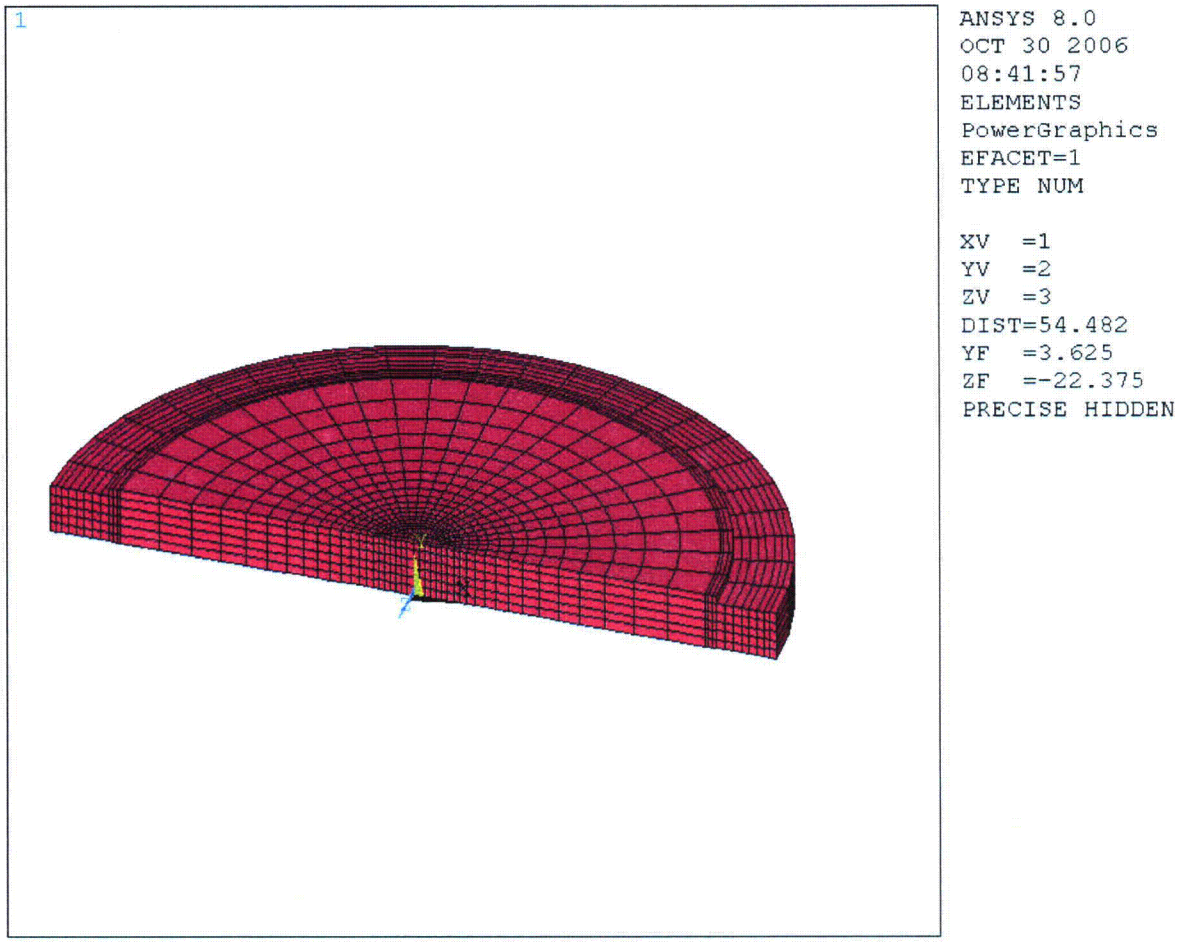

FIGURE A4A.3-6
FINITE ELEMENT MODEL – BOTTOM SHIELD

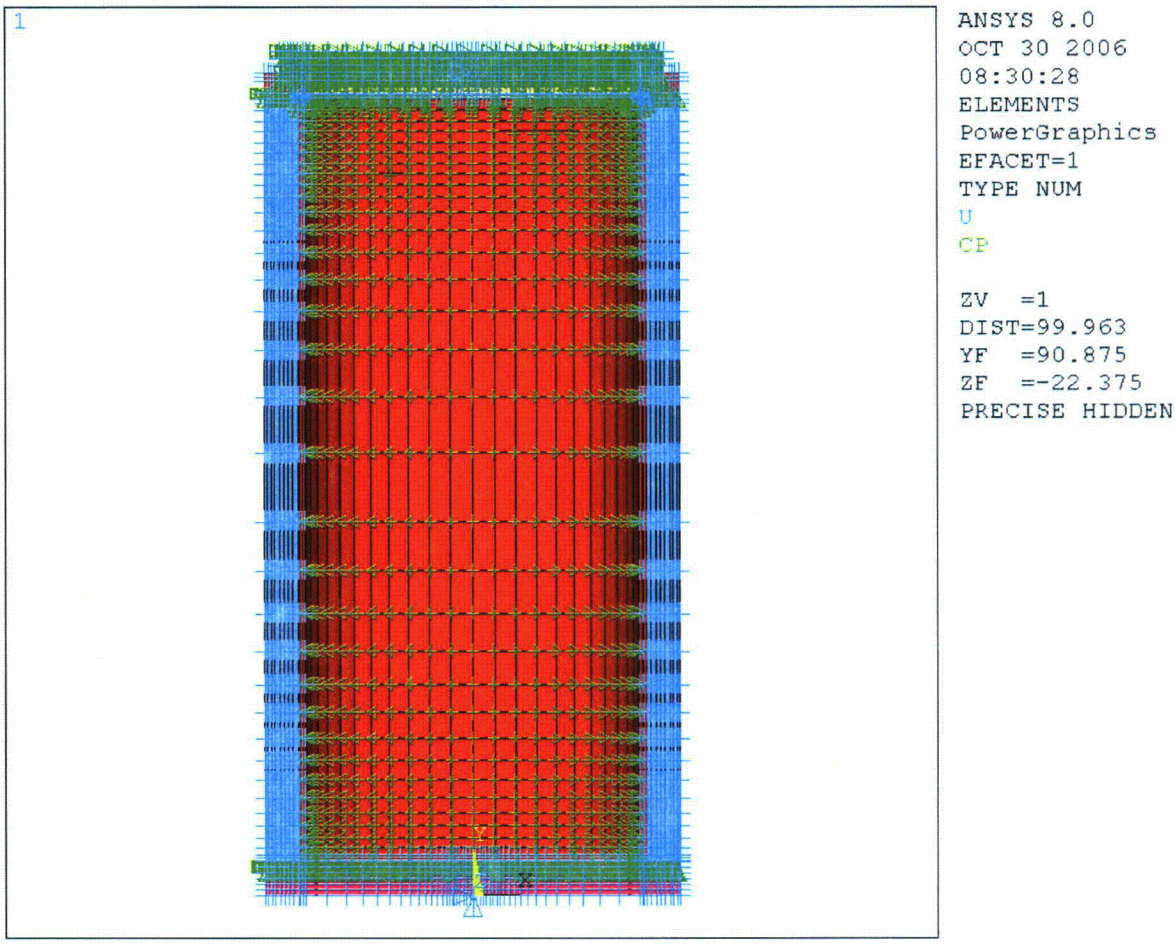

FIGURE A4A.3-7
COUPLING AND BOUNDARY CONDITIONS

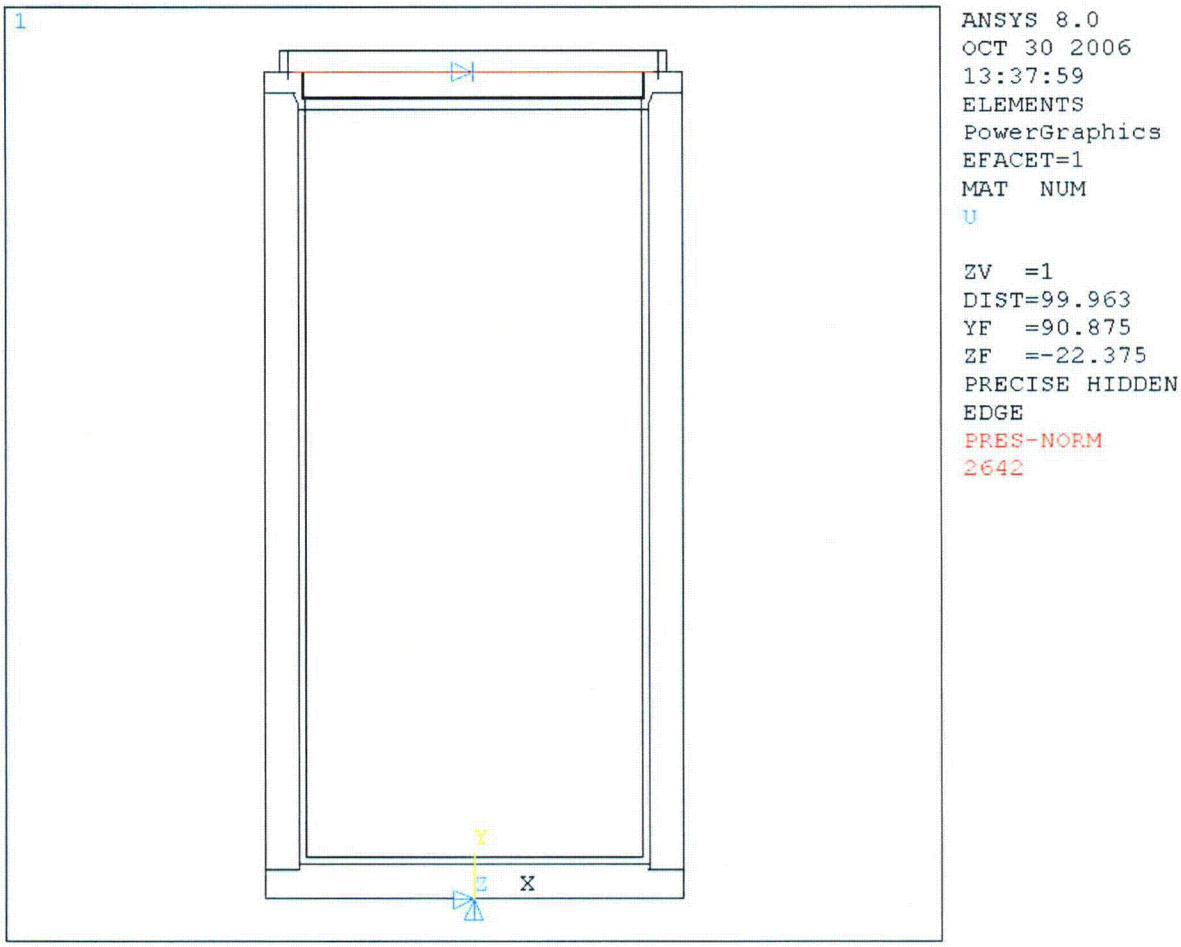

FIGURE A4A.3-8
BOLT PRELOAD AND LID SEATING PRESSURE – LOADING AND DISPLACEMENT BOUNDARY CONDITIONS

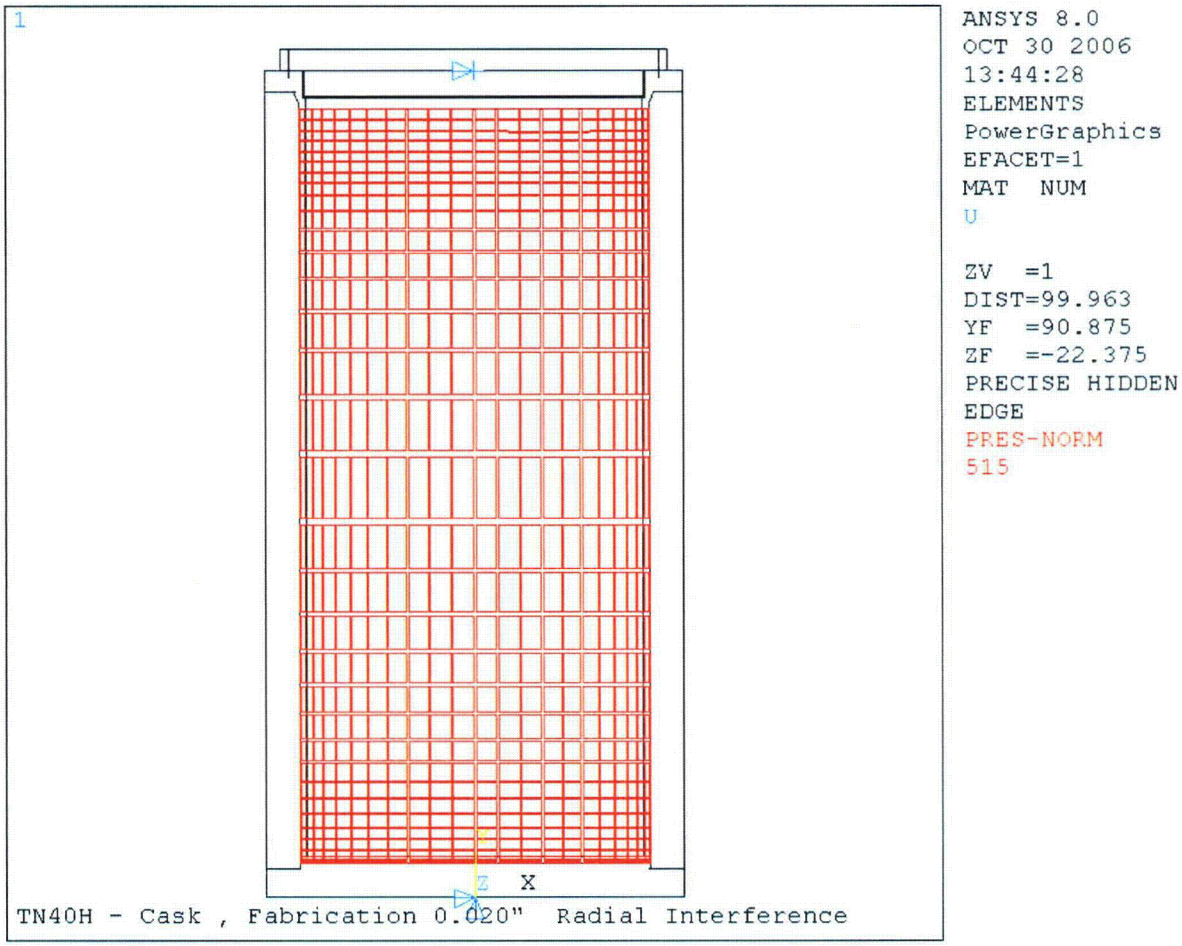

FIGURE A4A.3-9
FABRICATION STRESS – LOADING AND DISPLACEMENT BOUNDARY CONDITIONS

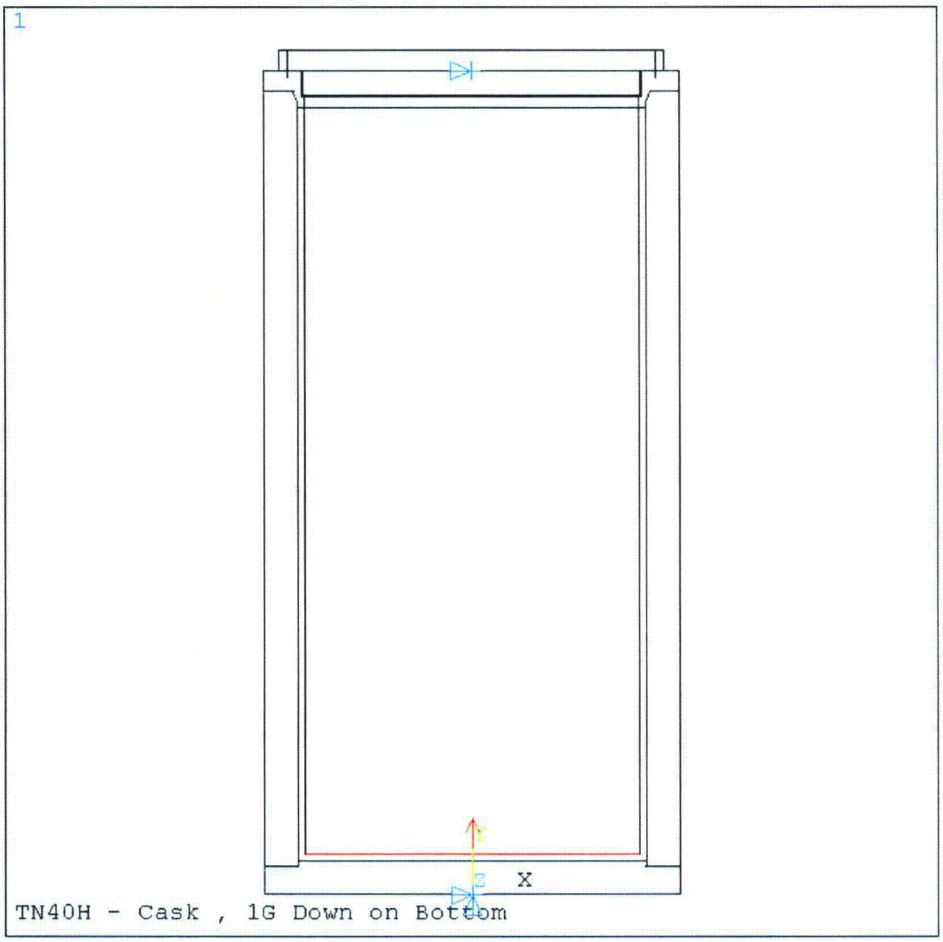

FIGURE A4A.3-10
1G DOWN – LOADING AND DISPLACEMENT BOUNDARY CONDITIONS

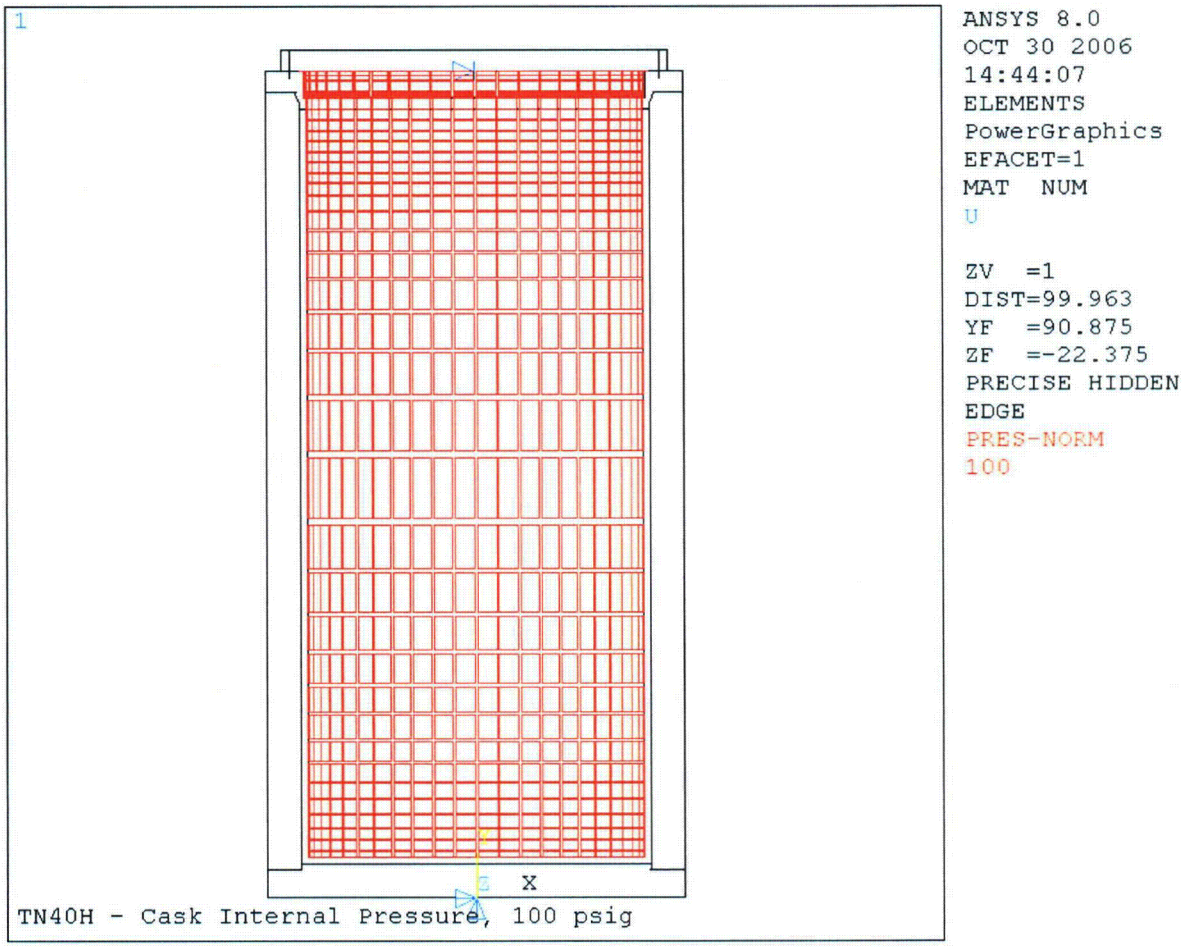

FIGURE A4A.3-11
INTERNAL PRESSURE – LOADING AND DISPLACEMENT BOUNDARY CONDITIONS

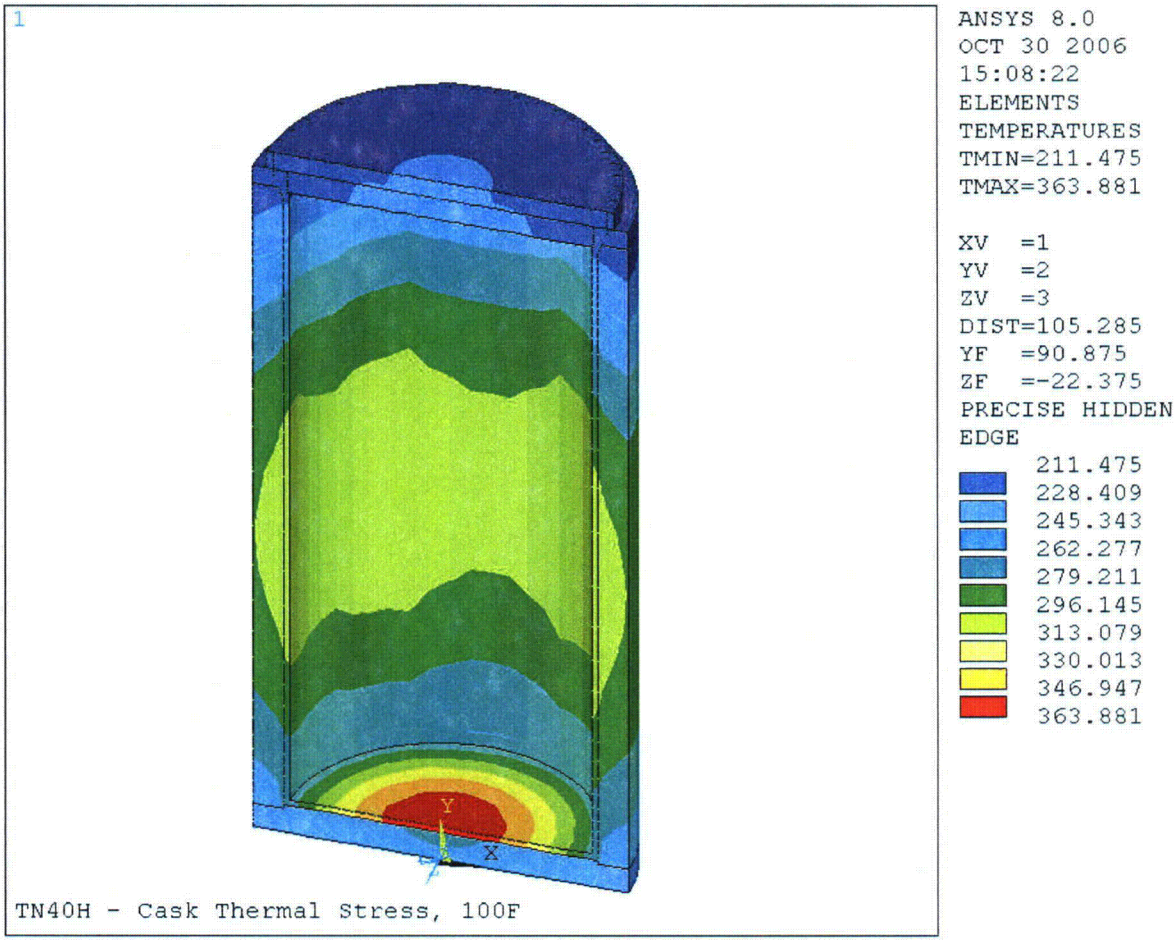

FIGURE A4A.3-12
THERMAL STRESS 100° F ENVIRONMENT – LOADING AND DISPLACEMENT BOUNDARY CONDITIONS

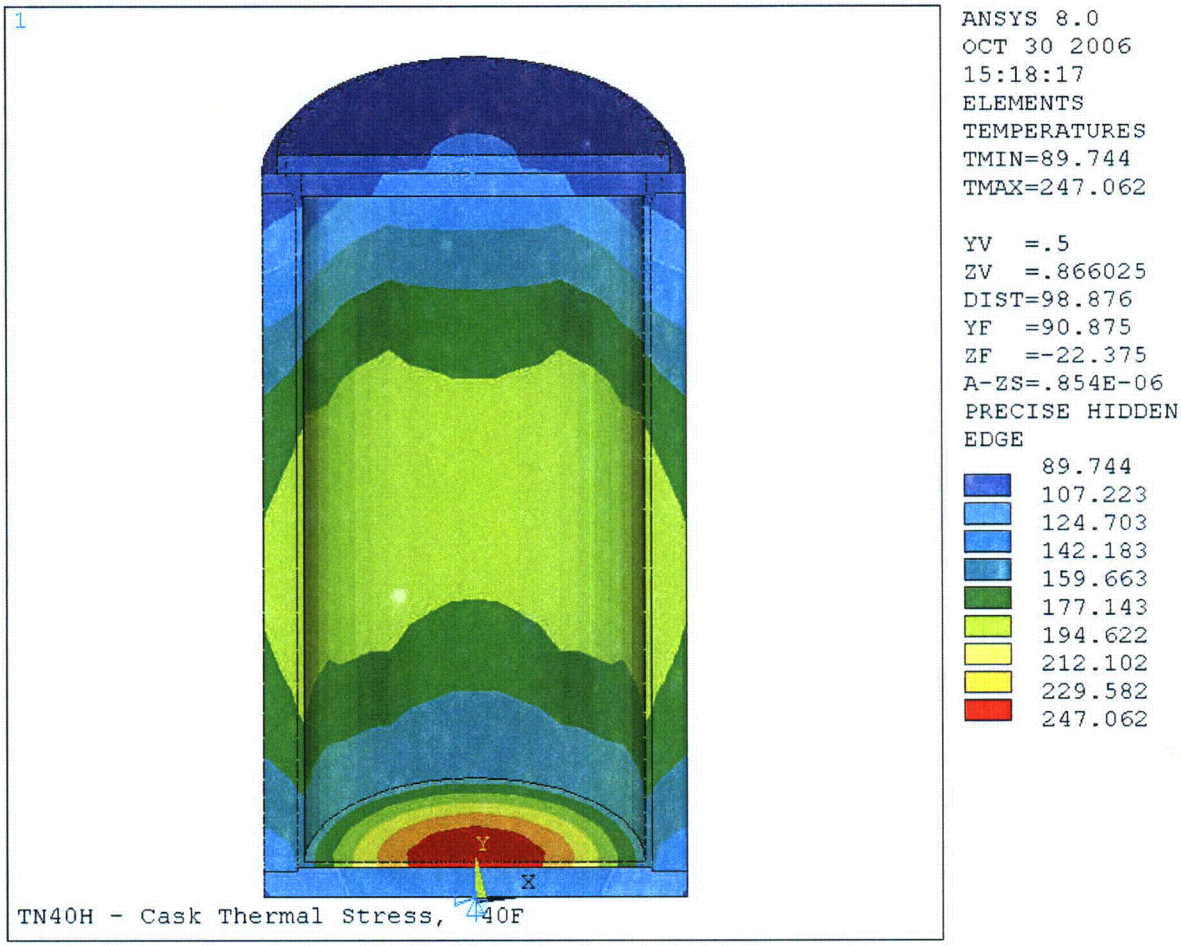

FIGURE A4A.3-13
THERMAL STRESS -40° F ENVIRONMENT – LOADING AND DISPLACEMENT BOUNDARY CONDITIONS

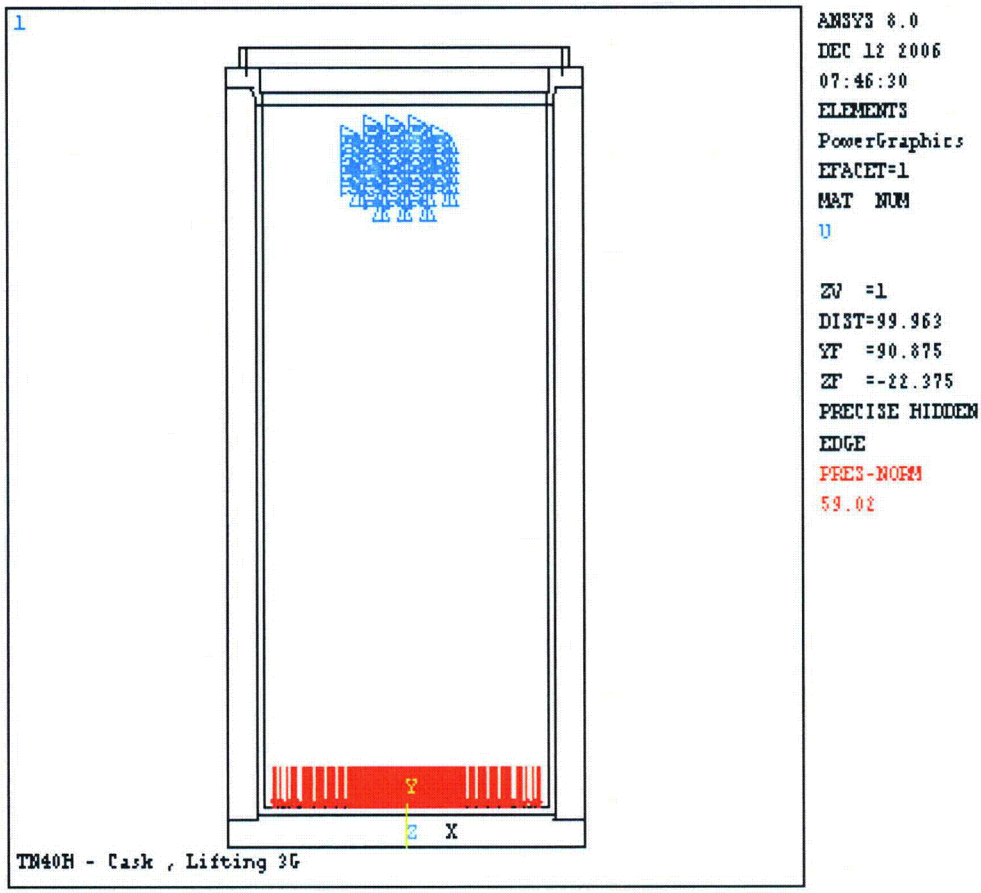

FIGURE A4A.3-14
3G VERTICAL LIFTING – LOADING AND DISPLACEMENT BOUNDARY CONDITIONS

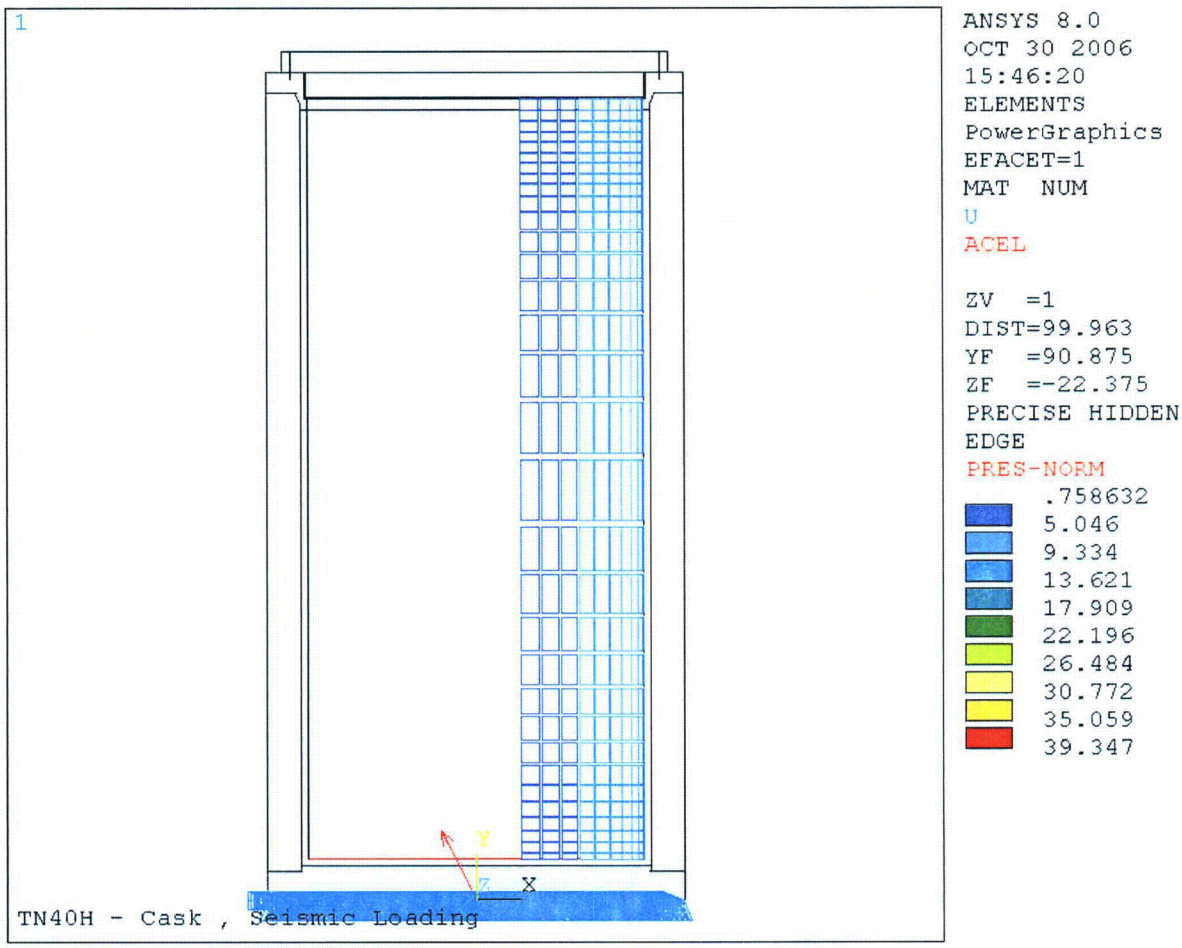

FIGURE A4A.3-15
SEISMIC – LOADING AND DISPLACEMENT BOUNDARY CONDITIONS

WITHHELD PURSUANT TO 10 CFR 2.390

FIGURE A4A.6-1
TN-40HT TRUNNION DIMENSIONS

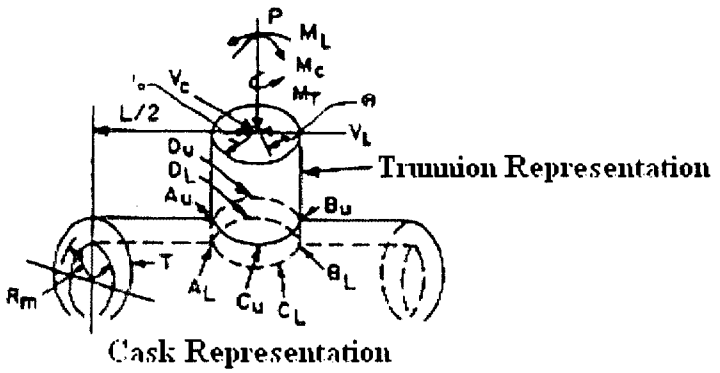

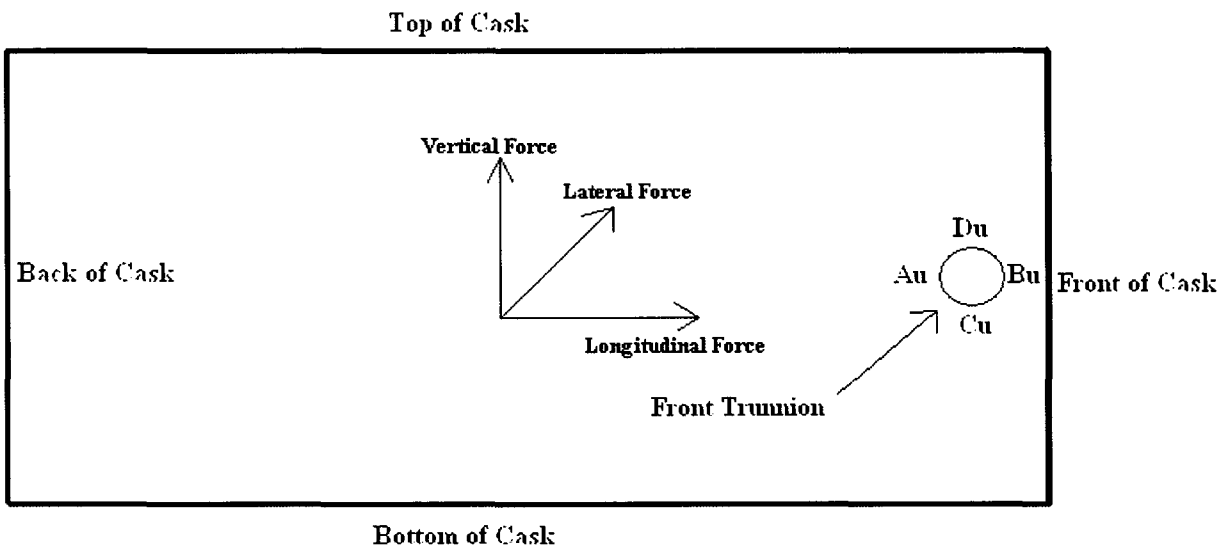

FIGURE A4A.6-2
ILLUSTRATION OF DEFINING FORCES, MOMENTS, AND STRESS LOCATIONS

WITHHELD PURSUANT TO 10 CFR 2.390

Figure A4A.7-1
Cask Outer Shell and Connection to Cask Body

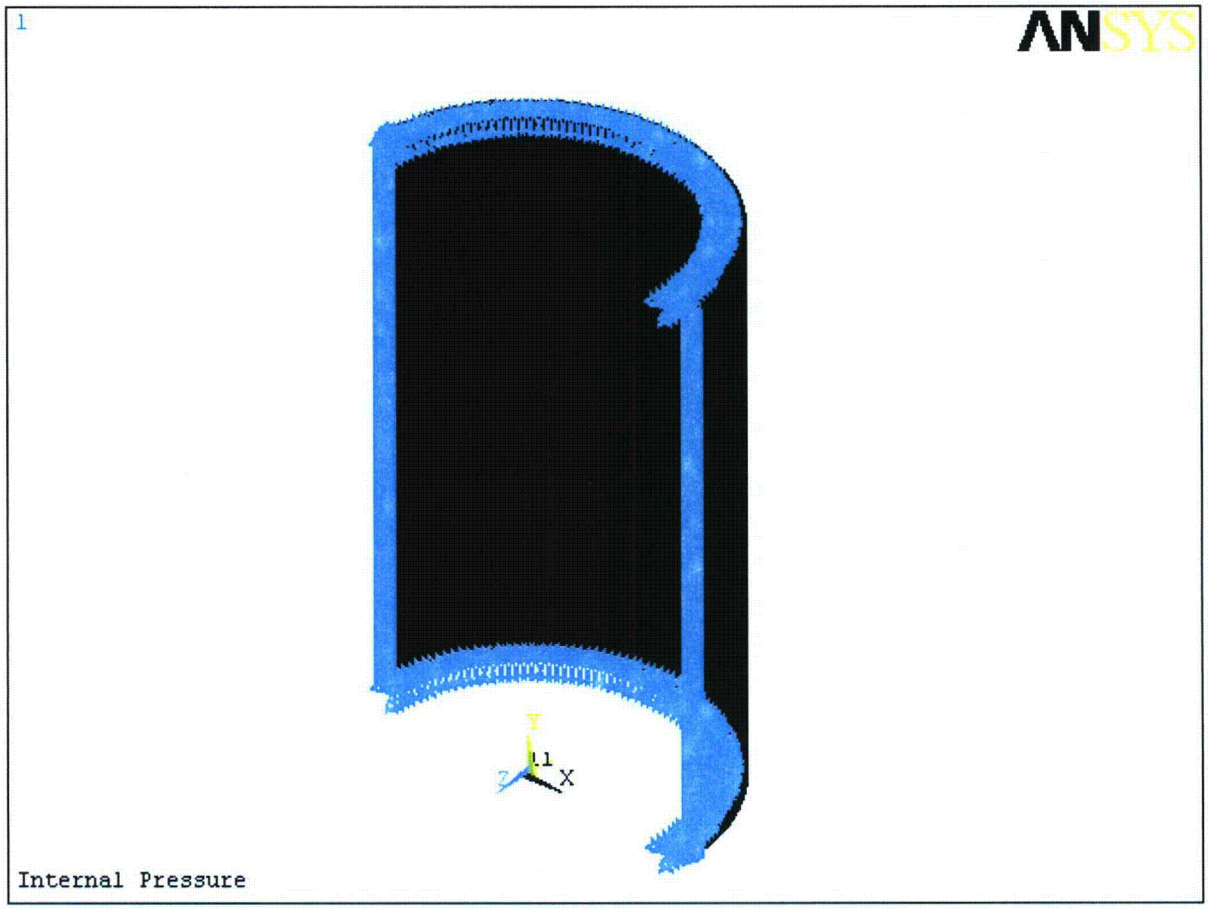

Figure A4A.7-2
Finite Element Model - Boundary Conditions

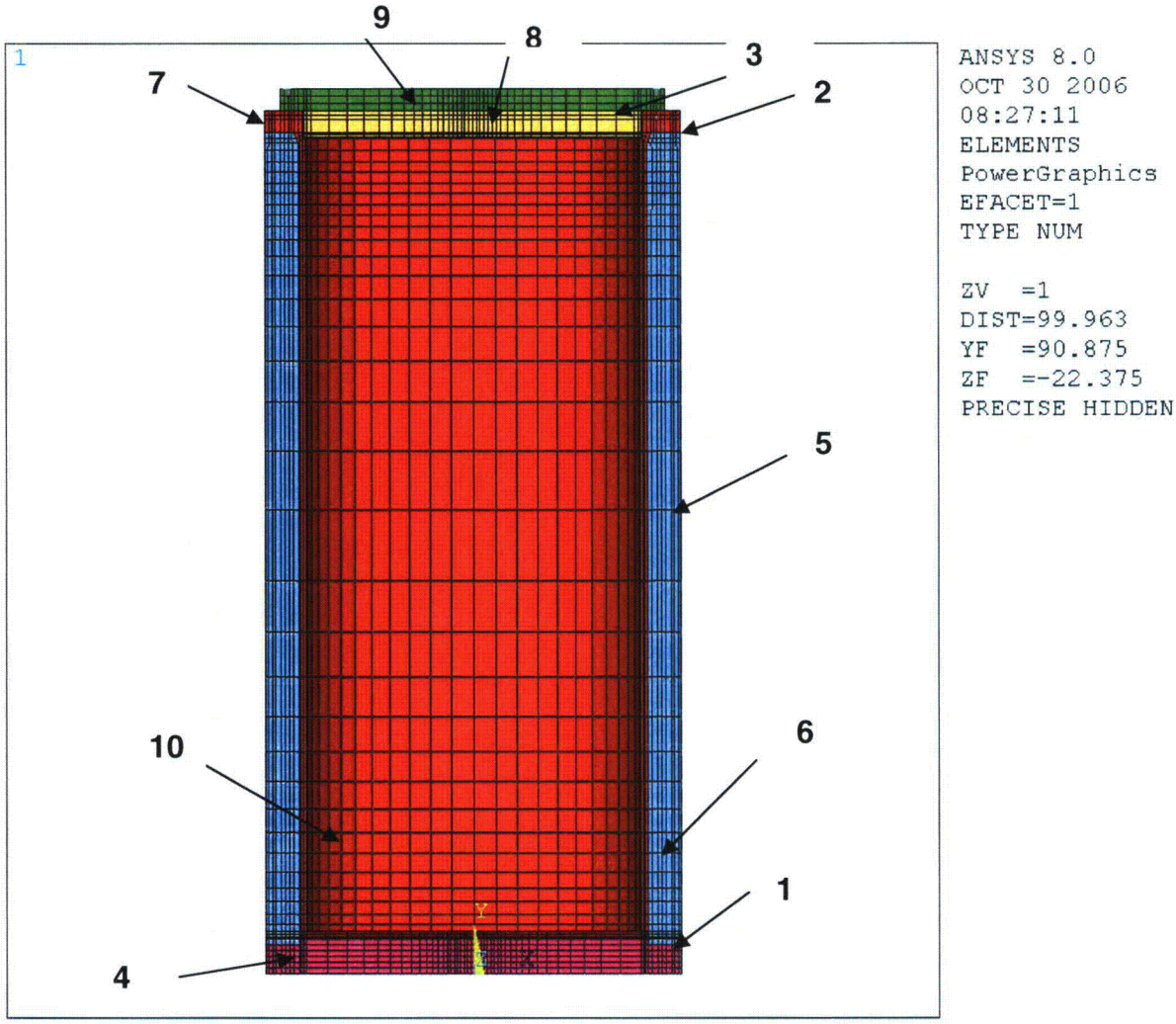

Note: Numbers indicate selected locations for fracture toughness evaluation.

FIGURE A4A.9-1
CASK BODY CRITICAL LOCATIONS FOR STRESS AND FRACTURE EVALUATION

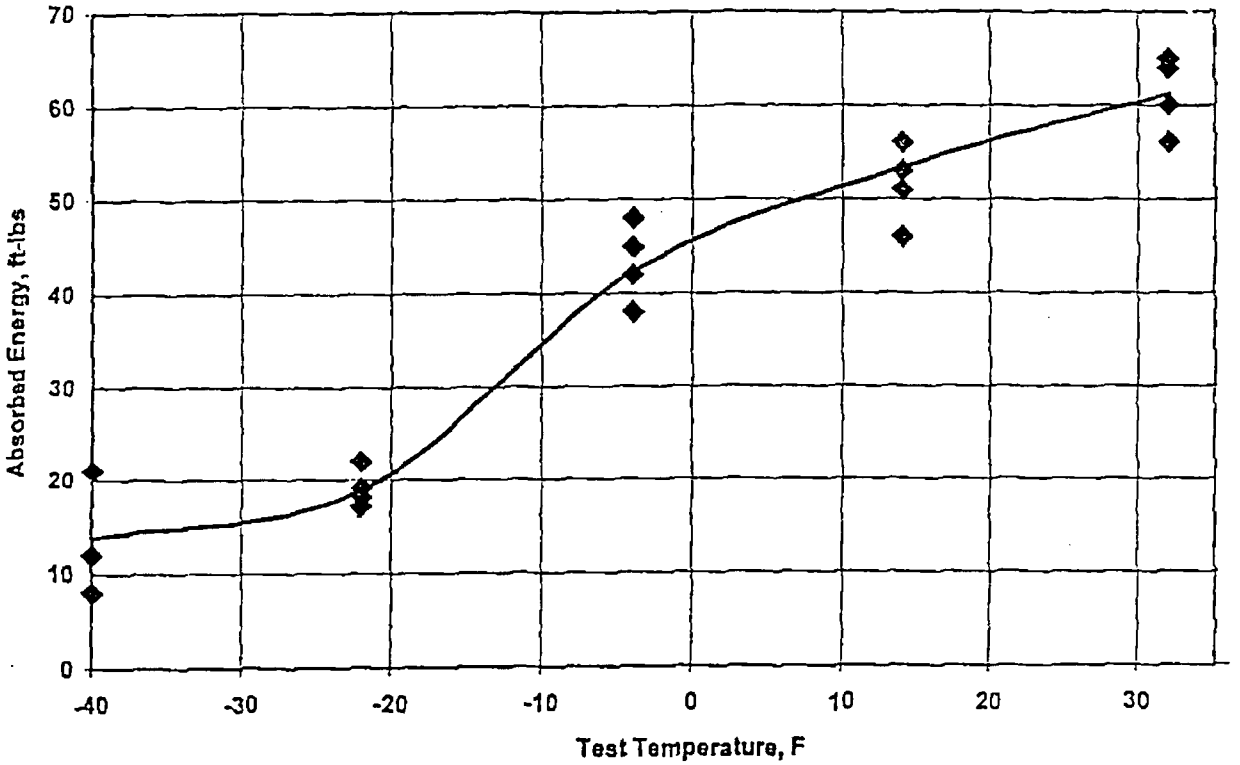

FIGURE A4A.9-2
CHARPY V-NOTCH TEST RESULTS FOR SA-266 FORGING

APPENDIX A4B

STRUCTURAL ANALYSIS OF THE TN-40HT BASKET

A4B.1 INTRODUCTION

This appendix presents the structural analysis of the TN-40HT basket. The basket is a welded assembly of stainless steel boxes designed to accommodate 40 PWR fuel assemblies. The stainless steel fuel compartments are fusion welded to Type 304 stainless steel structural plates, sandwiched between components. The fusion welds are spaced intermittently along the box sections. Neutron poison plates and aluminum plates are sandwiched between the sections of the stainless steel walls of the adjacent boxes and the adjacent stainless steel plates. The Type 304 stainless steel members are the primary structural components. The neutron poison plates provide criticality control and the aluminum plates provide a heat conduction path from the fuel assemblies to the inner shell.

Stainless steel rails are oriented parallel to the longitudinal axis of the cask and are attached to the periphery of the basket to establish and maintain basket orientation and to support the basket.

The basket structure is open at each end and therefore, longitudinal fuel assembly loads are applied directly to the cask body and not to the fuel basket structure. The fuel assemblies are laterally supported by the stainless steel fuel compartments, and the basket is laterally supported by the cask inner shell.

The deformations and stresses induced in the basket structure due to the applied vertical, lateral, and thermal loads are determined using the ANSYS computer program (Reference 1). The individual loads applicable for the TN-40HT basket are summarized in Table A4B.1-1. These include normal condition handling loads, thermal loads and 50g accident condition bottom end drop load. The inertial loads of the fuel assemblies are applied as equivalent pressures on the stainless steel box interior surfaces. Quasi-static stress analyses are performed with applied loads in equilibrium with the reactions at the periphery of the basket. The calculated stresses in the basket structure are compared in Section A4.2.3.4.4 to the allowable stress limits to demonstrate that the established design criteria are met.

A4B.1.1 TN-40HT FUEL BASKET GEOMETRY

The details of the TN-40HT basket are shown on TN Drawings in Section A1.5. A representative cross section of support bars between fuel compartments is shown in Figure A4B.1-1. The support bars are fusion welded to the fuel compartments. This method of construction forms a very strong honeycomb-like structure. The nominal open dimension of each fuel compartment box is 8.05 in. × 8.05 in. which provides a minimum of 1/8 in. clearance around the fuel assemblies. The pitch of the fuel compartments is approximately 8.86 in. The overall basket length (160 in.) is less than the cask cavity length to allow for loading the fuel assemblies and thermal expansion.

Structural transition rails oriented parallel to the longitudinal axis of the cask are attached to the periphery of the basket to establish and maintain basket orientation, to prevent twisting of the basket assembly, and to support the basket due to lateral initial loads.

A4B.1.2 FUEL BASKET ANALYSIS OVERVIEW

The fuel basket is evaluated for normal and accident condition loads specified in Table A4B.1-1. The basket stress analysis is performed using a finite element method for the normal condition handling and thermal load cases. The end drop load case is calculated by hand.

A4B.1.3 WEIGHT

The total weight of the TN-40HT basket is approximately 28,500 lbs., and the total weight of 40 fuel assemblies plus inserts is less than 52,000 lb. A uniform fuel weight of 1,300 lb is assumed to be distributed over the active fuel length of 144 inches. This methodology is conservative considering a maximum combined fuel and insert weight of 1,330 would be distributed over the entire fuel assembly length. The inertia of the basket structure (weight of the basket × g-load) is also included in the analysis.

A4B.1.4 TEMPERATURE

Thermal analyses are performed to obtain the temperature distributions in the basket for various conditions. These analyses are presented in Section A3.

A4B.1.5 TN-40HT FUEL BASKET STRESS ANALYSIS

A4B.1.5.1 APPROACH

Bounding inertial loads of 3g vertical plus 3g lateral for the normal conditions and 50g vertical bottom end drop for accident conditions are applied to the basket. These inertial loads bound all applicable basket loads described in Section A3. 0°, 30°, 45°, 60° and 90° azimuth orientations are analyzed in order to bound all possible lateral loads. Nonlinear (gap element) elastic analyses of the basket structure were performed using ANSYS (Reference 1).

A4B.1.5.2 BASKET ANALYSIS FOR VERTICAL AND LATERAL INERTIAL LOADS

A4B.1.5.2.1 FINITE ELEMENT MODEL DESCRIPTION

A three-dimensional finite element model of the basket is constructed using shell elements. The overall finite element model of the fuel basket is shown in Figure A4B.1-2. The fuel compartments and transition rails are included in the model. For conservatism, the strengths of aluminum plates and poison plates in the basket are neglected by excluding them from the finite element model. However, their weights are accounted for by increasing the structural steel plate material densities to 0.39 lbs/in^3.

Because of the large number of plates in the basket and large size of the basket, certain modeling approximations were necessary. In view of continuous support of fuel compartment tubes by the transition rails along the entire basket length during storage condition lateral loads, only a 15.0 inch long axial section of the basket and transition rail is modeled. At the two cut faces of the model, symmetry boundary conditions are applied.

The fusion welds, connecting the fuel compartments and plates, are modeled with pipe elements connected at each end to adjacent fuel compartment boxes. The interaction between plates and between transition rails and cask is modeled by gap elements.

The boundary conditions are shown in Figure A4B.1-3.

A4B.1.5.2.2 Material Properties and Allowable Stresses

The stainless steel fuel compartment and transition rails are constructed from SA-240, Type 304 stainless steel. Table A4B.1-2 lists the material properties used in all analyses of the TN-40HT basket. Table A4B.1-3 and Table A4B.1-4 summarize the allowable stress for normal and accident conditions, respectively. Note that the transition rail allowable stresses are based on the allowable stress for surface PT weld (0.65 x S).

A4B.1.5.2.3 Vertical and Lateral Inertial Loads

The basket structure is analyzed for 0°, 30°, 45°, 60° and 90° azimuth lateral loads. Due to the basket structure symmetry, these orientations are assumed to envelop all other possible loading orientations.

A uniform fuel weight distribution is assumed over 144 inches, which is the active fuel length. A 15.0 inch section of the basket assembly is modeled. The weight of the aluminum plates and poison plates are accounted for by increasing the density of the steel plates. The aluminum plate stiffness and poison plate stiffness are conservatively neglected in the analysis.

The basket temperature is taken as 650 °F, uniform. The rail temperature is taken as 500 °F, uniform. These temperatures are conservatively taken from the normal condition (100 °F) thermal analysis presented in Section A3.

The load resulting from the fuel assembly weight is applied as pressure on the fuel compartment plates. For the 0° orientation, the pressure acts only on the horizontal plates, and for the 90° orientation, the pressure acts only on the vertical plates. For the 30°, 45° and 60° orientation, the pressure was divided into components that act on both horizontal and vertical plates of the fuel compartments. The pressures for all orientations are calculated below for vertical and horizontal plates due to 1g and 3g lateral acceleration.

0° and 90° Drop Orientations

Pressure for 1g p = Fuel assembly weight / (Panel span × Panel length)
= 1300 lb./ (8.2375" x 144") = 1.096 psi
Pressure for 3g = 3 x 1.096 = 3.288 psi

30° Orientation

P_h on vertical plates for 1g = p sin 30° = 1.096 x 0.5 = 0.548 psi
P_v on horizontal plates for 1g = p cos 30° = 1.096 x 0.86603 = 0.949 psi
P_h on vertical plates for 3g = 3 x 0.548 = 1.644 psi
P_v on horizontal plates for 3g = 3 x 0.949 = 2.847 psi

45° Orientation

P_h on vertical plates for 1g = p sin 45° = 1.096 x 0.7071 = 0.775 psi
P_v on horizontal plates for 1g = p cos 45° = 1.096 x 0.7071 = 0.775 psi
P_h on vertical plates for 3g = 3 x 0.775 = 2.325 psi
P_v on horizontal plates for 3g = 3 x 0.775 = 2.325 psi

60° Orientation

P_h on vertical plates for 1g = p sin 60° = 1.096 x 0.86603 = 0.949 psi
P_v on horizontal plates for 1g = p cos 60° = 1.096 x 0.5 = 0.548 psi
P_h on vertical plates for 3g = 3 x 0.949 = 2.847 psi
P_v on horizontal plates for 3g = 3 x 0.548 = 1.644 psi

An increased axial acceleration is applied to the 15 inch section to simulate the compressive load due to the weight of the complete basket. The acceleration is (including the 3gs),

3.0 x (160/15) = 32 g

Note: This simplified approach yields the correct vertical reaction force, but yields a compressive stress in the plates varying from zero at the top-most elements to the full 0.39 ksi at the bottom-most elements. (See the end drop analysis in Section A4B.1.5.5. Multiplying the 1g stress of 0.13216 ksi by 3 gives a 3g stress of 0.39 ksi). In reality, at the lower extremities of the basket, the entire 15" modeled portion of the basket would have 0.39 ksi direct compressive stress.

The load distributions for the 0°, 30°, 45°, 60° and 90° analyses for the normal condition loads are shown in Figure A4B.1-8 through Figure A4B.1-12, respectively.

The accelerations applied in each run are as follows.

Orientation	Inertial Load (g)	a_x (g)	a_y (g)	a_z (g) (simulate 3g axial load)
0°	3g vert. & 3g lat.	0	3	32
30°	3g vert. & 3g lat.	-1.5	2.598	32
45°	3g vert. & 3g lat.	-2.121	2.121	32
60°	3g vert. & 3g lat.	-2.598	1.5	32
90°	3g vert. & 3g lat.	-3	0	32

A4B.1.5.2.4 ANSYS 3g Vertical & 3g Lateral Analyses and Results

Nonlinear (gap element) elastic analyses of the basket structure were performed using ANSYS for the 0°, 30°, 45°, 60° and 90° vertical and lateral load orientations.

The nodal stress intensity distribution in the stainless steel fuel compartments and transition rails are computed by ANSYS. The membrane plus bending stress intensity distributions for the 45° loading condition are shown in Figure A4B.1-13 and Figure A4B.1-14 as representative sample of the resulting stresses. The shell middle surface nodal stress intensity is the membrane stress intensity and the top or bottom surface stress intensity is the membrane plus bending stress intensity. The maximum membrane and membrane plus bending stresses for each load orientation are summarized in Table A4B.1-5.

A4B.1.5.3 BASKET ANALYSIS FOR THERMAL LOADS

A4B.1.5.3.1 Finite Element Model Description

Thermal Stress Model for Basket Fuel Compartments

A three-dimensional finite element model of the basket Fuel Compartments is constructed using shell elements. Due to symmetry, only ¼ of the model (see Figure A4B.1-15) is used in this analysis.

Thermal Stresses for Transition Rails

A three-dimensional finite element model of the transition rails is constructed using shell elements. Due to symmetry, only ¼ of the model (see Figure A4B.1-16) is used in this analysis.

A4B.1.5.3.2 Thermal Loads

The transition rails are attached to the basket with bolts in slotted holes, thus permitting free thermal growth of basket boxes. However, some thermal stresses in basket and rails can develop due to radial gradients (hot at center and cooler at periphery) for normal thermal conditions. Basket and Rail thermal stresses are calculated for the 100 °F (hot normal) and -40 °F (cold normal) ambient.

Elastic material properties described in Section A4B.1.5.2 are used, and conservative temperature gradients are applied (see paragraphs below).

Nodal Temperature for Basket Fuel Compartments

Analyses documented in Section A3 were used to obtain temperatures along a radial line from the basket center to the basket perimeter that give the largest radial thermal gradient. These temperatures were used to develop bounding polynomial curve-fit equations that give temperatures as a function of radial location. The temperature gradients were conservatively modified by increasing the temperature in the middle of the basket by 50 °F and decreasing the temperature at the perimeter of the basket by 50 °F for normal and off-normal thermal storage conditions. Temperatures between the middle of the basket and the perimeter of the basket were modified proportionally to maintain the same basic shape of the temperature distribution. For a given bounding curve, the conservative temperature gradient is mapped onto the basket models in all radial directions to give the largest gradient across the entire diameter of the basket. The temperature distribution in the fuel compartments for 100 °F and -40 °F are shown in Figure A4B.1-4 and Figure A4B.1-5, respectively.

Nodal Temperature for Transition Rails

The same conservative temperature gradient for fuel compartments is mapped onto the rail models in all radial directions to give the largest gradient across the entire diameter of the basket. The temperature distribution in the transition rails for 100 °F and -40 °F ambient conditions are shown in Figure A4B.1-6 and Figure A4B.1-7, respectively.

A4B.1.5.3.3 ANSYS Thermal Analysis and Results

Basket Compartment

Nodal stress intensity distributions in basket fuel compartments and the support plates are plotted at top or bottom surfaces in Figure A4B.1-17 and Figure A4B.1-18 for 100 °F and -40 °F ambient conditions, respectively.

The maximum stress intensities in the fuel compartments are 8.61 ksi and 8.74 ksi for 100 °F and -40 °F ambient conditions, respectively, and are shown in Table A4B.1-6.

Transition Rail

Nodal stress intensity distributions in transition rails are plotted at top or bottom surfaces in Figure A4B.1-19 and Figure A4B.1-20 for 100 °F and -40 °F ambient conditions, respectively.

The maximum stress intensities in the transition rails are 21.73 ksi and 21.60 ksi for 100 °F and -40 °F ambient conditions, respectively, and are shown in Table A4B.1-6.

A4B.1.5.4 SHEAR LOAD IN THE FUSION WELD

The results of the static load analyses were post-processed for Axial (FX) and Shear (FY and FZ) forces in the pipe elements representing the Fusion Welds. The maximum forces are listed as follow:

Maximum Force, FX = 314.92 lb. (at Element No. 32728, 60° lateral load orientation)

Maximum Force, FY = 950.88 lb. (at Element No. 32723, 90° lateral load orientation)

Maximum Force, FZ = 99.27 lb. (at Element No. 32553, 60° lateral load orientation)

The results of the thermal load analyses were also post-processed for Axial (FX) and Shear (FY and FZ) forces in the pipe elements representing the Fusion Welds. The maximum forces are listed as follow:

Maximum Force, FX = 310.69 lb. (at Element No. 32559, 100 °F ambient)
Maximum Force, FY = 608.83 lb. (at Element No. 32548, -40 °F ambient)
Maximum Force, FZ = 99.01 lb. (at Element No. 32717, -40 °F ambient)

The maximum combined shear load in a fusion weld is computed by vectorially adding the maximum FX, FY, and FZ (irrespective of their location).

Maximum Combined Shear Force = $[(314.92 + 310.69)^2 + (950.88 + 608.83)^2 + (99.27 + 99.01)^2]^{1/2}$ = 1,683 lb = 1.68 kips (per fusion weld)

For the fusion weld load capacity test at room temperature, a factor of safety of 1.43 is applied and the material strength is corrected for room temperature testing. Therefore the, the required minimum fusion weld test load per weld is:

= 1,683 * (Factor of Safety) * (S_u at room temperature / S_u at 650°F)

=1,683 lb * 1.43 * (75 ksi/63.4 ksi) = 2,847 lb.

≈ 2.9 kips

A4B.1.5.5 FUEL BASKET VERTICAL END DROP ANALYSIS

During vertical end drop load case, the fuel assemblies and fuel compartments are forced against the bottom of the TN-40HT cask. It is important to note that, for any vertical or near vertical loading, the fuel assemblies react directly against the bottom of the cask and not through the basket structure as in lateral loading. It is the weight of the basket that causes axial compressive stress during an end drop. Axial compressive stresses are conservatively computed by assuming that all of the basket weight is reacted by the compartment tubes during an end drop. A basket weight of 28.5 kips is used in the end drop stress calculations.

Stainless Steel Basket Components

Total weight of basket assembly = 28.5 kips

Compressive stress in fuel compartments:

Section area of compartment tubes = $40 \times [(w + 2t)^2 - w^2] = 40 \times [8.425^2 - 8.05^2]$
$= 247.125 \text{ in}^2$

Area of drain slots = 40 x 4 slots/compartment x [1" x .1875"] = 30 in^2

Stress due to 1g = P / A = -28.5 / [247.125 – 30] = -0.13126 ksi

Stress due to 50g end drop is 50 x 0.13126 = 6.56 ksi

This stress is much lower than the accident membrane allowable of 38.88 ksi (2.4 S_m at 650 °F)

A4B.1.5.6 EVALUATION OF BASKET ALUMINUM COMPONENTS FOR LONG TERM STORAGE DEADWEIGHT

The long term storage load (deadweight) compressive stresses in the limiting aluminum components were compared to allowable stress values that have been reduced to limit the effects due to material creep.

In the TN-40HT basket, the steel support bars are welded between the fuel compartments and form a cavity for the aluminum plates. Thus, there is no additional compressive stress in the aluminum plates, except the dead weight. The maximum height of the basket aluminum plates is 13.14". Since the dead weight compressive stresses in these plates is so small, these are not the limiting aluminum components.

The aluminum rail inserts are bolted at intervals to the R45 and R90 rails. The maximum compressive stress in the aluminum inserts is conservatively calculated as the entire length of the basket supported by itself at the bottom without taking credit for the bolts. The results are compared to allowable stress values that are reduced to limit the effect due to creep.

The compressive stress in the inserts is conservatively calculated as the entire length of the basket insert.

1g vertical bearing stress = Load / Area =

$$\frac{Volume\ X\ Density}{Area} = Length\ X\ Density = 160\,x\,0.098 \quad = 15.68 \text{ psi}$$

Where,
Length = 160"
Density = 0.098 lb/in3,

**PROPRIETARY - TRADE SECRET INFORMATION
WITHHELD PURSUANT TO 10 CFR 2.390**

Based on the above evaluation, the basket aluminum components for the TN40HT Basket design are structurally adequate for long-term storage loads and creep strain is acceptable.

A4B.1.5.7 BASKET STRESS ANALYSIS CONCLUSIONS

Basket Compartment

As shown in Table A4B.1-5 and A4B.1-6, the maximum stress intensity ($P_m + P_b$) in the fuel compartments and support plates (bars) is 9.66 ksi (at 60° load orientation), this stress is less than the membrane allowable (P_m) of 16.2 ksi (S_m at 650 °F).

The maximum primary plus secondary stress intensity ($P_m + P_b + Q$) is 18.40 ksi (maximum primary stress 9.66 ksi + 8.74 ksi from the above thermal analysis shown on Table A4B.1-6). This stress intensity is lower than the allowable stress of 48.6 ksi (3 S_m at 650 °F).

Transition Rail

As shown in Table A4B.1-5 and A4B.1-6, the maximum stress intensity ($P_m + P_b$) in the transition rail is 4.11 ksi (at 90° load orientation), this stress is less than the membrane allowable (P_m) of 11.38 ksi (S_m at 500 °F, 17.5 ksi x 0.65 = 11.38 ksi). This allowable is based on rail welds with surface PT requirements (Reference 2).

The maximum primary plus secondary stress intensity ($P_m + P_b + Q$) is 25.84 ksi (maximum primary stress 4.11 ksi + 21.73 ksi from the above thermal analysis as shown on Table A4B.1-6). This stress intensity is lower than the allowable stress of 34.13 ksi (3 S_m at 500 °F, 3 x 17.5 ksi x 0.65 = 34.13 ksi). This allowable is based on rail welds with surface PT requirements (Reference 2).

A4B.2 REFERENCES

1. ANSYS Engineering Analysis System Computer Code and User's Manual, Section II – Part D, release. 8.0.

2. ASME Boiler and Pressure Vessel Code, Section III, Subsection NG & Appendices, 2004 through 2006 addenda.

3. TN Technical Report No. E-25768, Rev. 0, "Evaluation of Creep of NUHOMS® Basket Aluminum Components Under Long Term Storage Conditions", November, 2007.

TABLE A4B.1-1
SUMMARY OF INDIVIDUAL LOADS FOR STORAGE CONDITIONS-BASKET

Individual Load	Loads
IL-1	1g Vertical (Gravity)
IL-2	3g Vertical (Lifting)
IL-3	3g Vertical + 3g Lateral (bounds all normal and off normal loads)
IL-4	Thermal Stress due to Hot Environment (100°F ambient)
IL-5	Thermal Stress due to Cold Environment (-40°F ambient)

TABLE A4B.1-2
MATERIAL PROPERTIES FOR TN-40HT FUEL BASKET

Part	Material	Temp. (°F)	S_y (ksi)	S_u (ksi)	S_m (ksi)	E (psi×10^6)	α_m (10^{-6} in/in/°F)
Steel Boxes and Rails	SA-240, Type 304	70	30.0	75.0	20.0	28.3	8.5
		300	22.4	66.2	20.0	27.0	9.2
		400	20.7	64.0	18.6	26.4	9.5
		500	19.4	63.4	17.5	25.9	9.7
		600	18.4	63.4	16.6	25.3	9.8
		700	17.6	63.4	15.8	24.8	10.0

Notes:

- Material Properties are obtained from ASME code Section II, Part D (Reference 2).

TABLE A4B.1-3
BASKET STRUCTURAL ALLOWABLE STRESSES, NORMAL CONDITIONS

Basket Compartment

Material	Temperature (˚F)	P_m (S_m) (ksi)	$P_m + P_b$ (1.5 S_m) (ksi)	$P_m + P_b + Q$ (3 S_m) (ksi)
SA-240, Type 304	650	16.2	24.3	48.6

Transition Rail

Material	Temperature (˚F)	P_m (S_m x 0.65) (ksi)	$P_m + P_b$ (1.5 S_m x 0.65) (ksi)	$P_m + P_b + Q$ (3 S_m x 0.65) (ksi)
SA-240, Type 304	500	11.38 (17.5 x 0.65)	17.06 (1.5 x 17.5 x 0.65)	34.13 (3 x 17.5 x 0.65)

Note: Allowable for transition rail is based on welds with surface PT examination [Reference 2 ASME Section III, Subsection NG, Table NG-3352-1].

TABLE A4B.1-4
BASKET STRUCTURAL ALLOWABLE STRESSES, ACCIDENT CONDITIONS

Material	Temperature (°F)	P_m (lesser of 2.4 S_m or 0.7 S_u) (ksi)	$P_m + P_b$ (lesser of 3.6 S_m or S_u) (ksi)
SA-240, Type 304	500	42.0	63.0
	650	38.88	58.32

TABLE A4B.1-5
SUMMARY OF BASKET STRESS ANALYSIS RESULTS

Lateral Load Orientation	Component	Stress Category	Maximum Stress (ksi)
0°	Fuel Compartments(1)	P_m	3.98
		$P_m + P_b$	5.89
	Rails	P_m	1.35
		$P_m + P_b$	3.11
30°	Fuel Compartments(1)	P_m	4.89
		$P_m + P_b$	8.70
	Rails	P_m	1.71
		$P_m + P_b$	3.49
45°	Fuel Compartments	P_m	3.92
		$P_m + P_b$	8.90
	Rails	P_m	1.68
		$P_m + P_b$	3.51
60°	Fuel Compartments(1)	P_m	3.88
		$P_m + P_b$	9.66
	Rails	P_m	1.14
		$P_m + P_b$	3.50
90°	Fuel Compartments(1)	P_m	2.63
		$P_m + P_b$	6.46
	Rails	P_m	1.55
		$P_m + P_b$	4.11

Note:
1. The component includes fuel compartments and support plates (bars).

TABLE A4B.1-6
SUMMARY OF STRESSES IN FUEL COMPARTMENTS AND RAILS

Loading	Component	Load Condition	Stress Classification	Loads	Stress[3] (ksi)	Allow. Stress (ksi)
3g Lifting	Fuel Compartment[2]	IL-2	P_m	3g Axial	0.39	16.2
			$P_m + P_b$		0.39	24.3
	Rail		P_m		0.39[1]	11.38
			$P_m + P_b$		0.39[1]	17.06
3g Vertical, 3g Lateral	Fuel Compartment[2]	IL-3	P_m	3g Axial + 3g Lateral	4.89	16.2
			$P_m + P_b$		9.66	24.3
	Rail		P_m		1.71	11.38
			$P_m + P_b$		4.11	17.06
Thermal	Fuel Compartment[2]	IL-4	Q	100° F Amb.	8.61	48.6
	Rail		Q		21.73	34.13
	Fuel Compartment[2]	IL-5	Q	-40° F Amb.	8.74	48.6
	Rail		Q		21.60	34.13

(1) Assumed same stresses as for fuel compartment. Thinner walls (3/16) of the fuel compartment carry the weight of the entire basket (fuel compartments, rails, poison plates, aluminum plates, and support bars) while the thicker walls (3/8) of the rails carry only the rail self weigh and the thin aluminum inserts.

(2) The component includes fuel compartments and support bars. A quality factor of 1.0 is applied based on single pass weld and 100% VT inspection on both sides.

(3) The smallest margin between the calculated stress and the allowable is 9.67 ksi (11.38- 171). This margin is sufficient to address the additional 0.39 ksi compressive stress in the lower extremities of the basket discussed in Section A4B.1.5.2.3.

PROPRIETARY - TRADE SECRET INFORMATION
WITHHELD PURSUANT TO 10 CFR 2.390

FIGURE A4B.1-1
TYPICAL TN-40HT BASKET FUEL COMPARTMENT CONFIGURATION

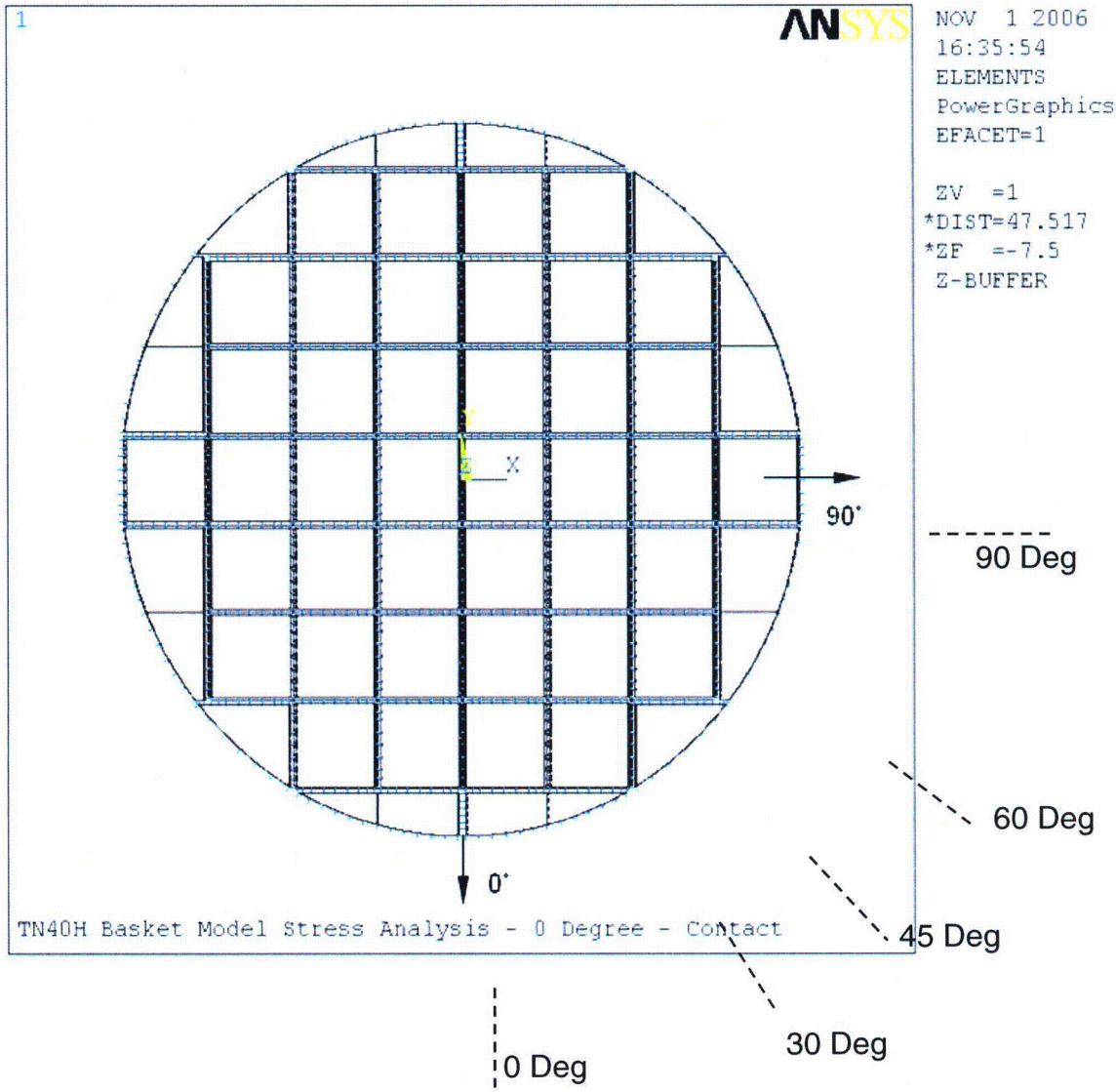

FIGURE A4B.1-2
TN-40HT BASKET FINITE ELEMENT MODEL INCLUDING ORIENTATION DEFINITIONS

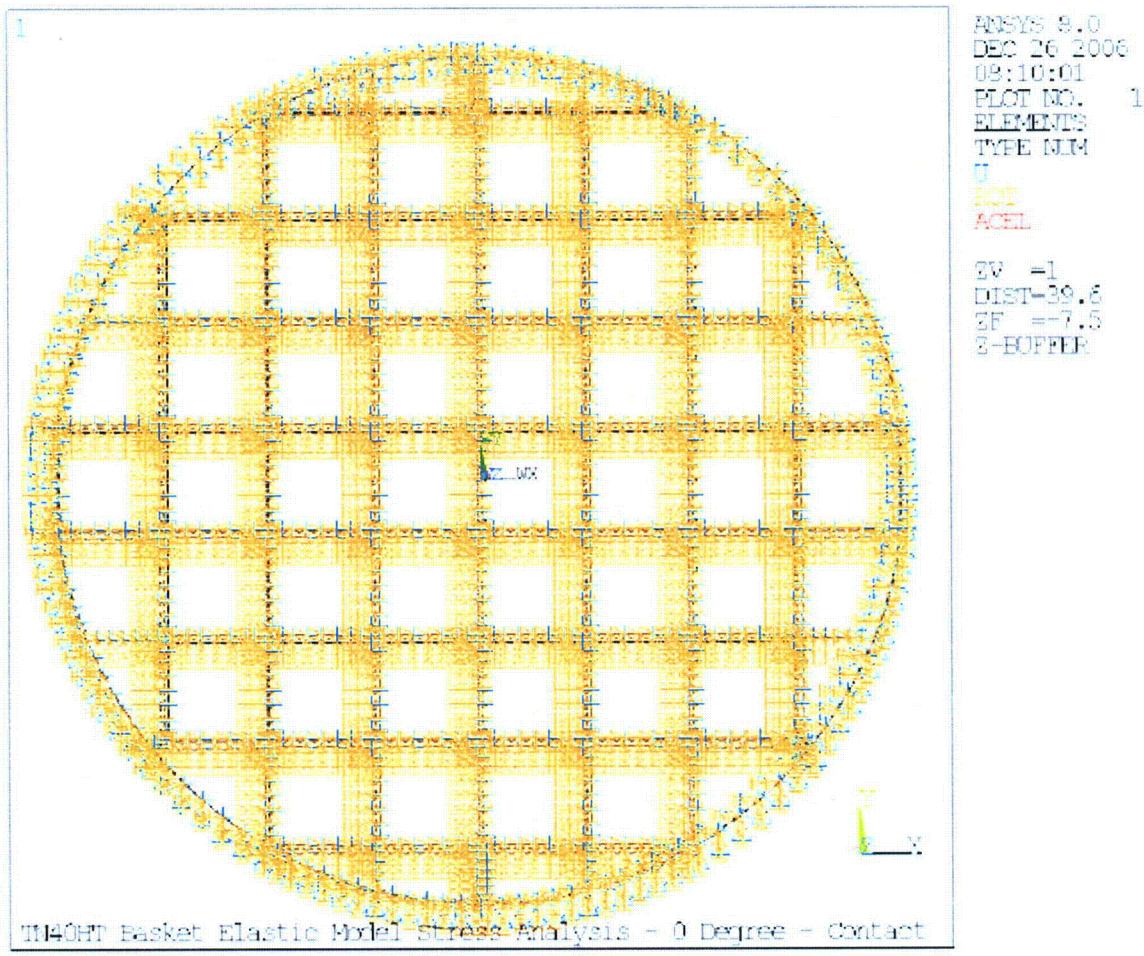

FIGURE A4B.1-3
BASKET FINITE ELEMENT MODEL DISPLACEMENT CONSTRAINTS – LATERAL LOADING

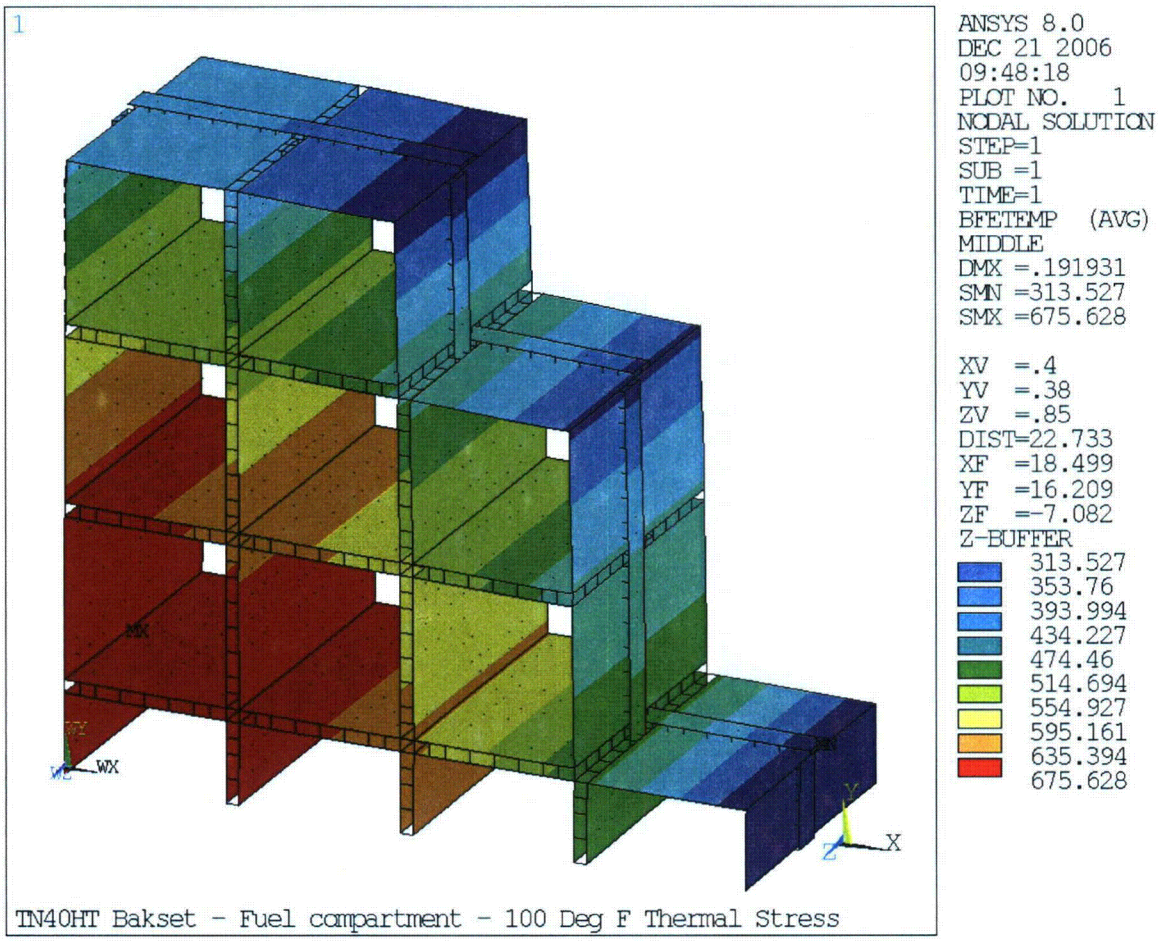

FIGURE A4B.1-4
FUEL COMPARTMENT FINITE ELEMENT MODEL TEMPERATURE DISTRIBUTION
100 °F AMBIENT

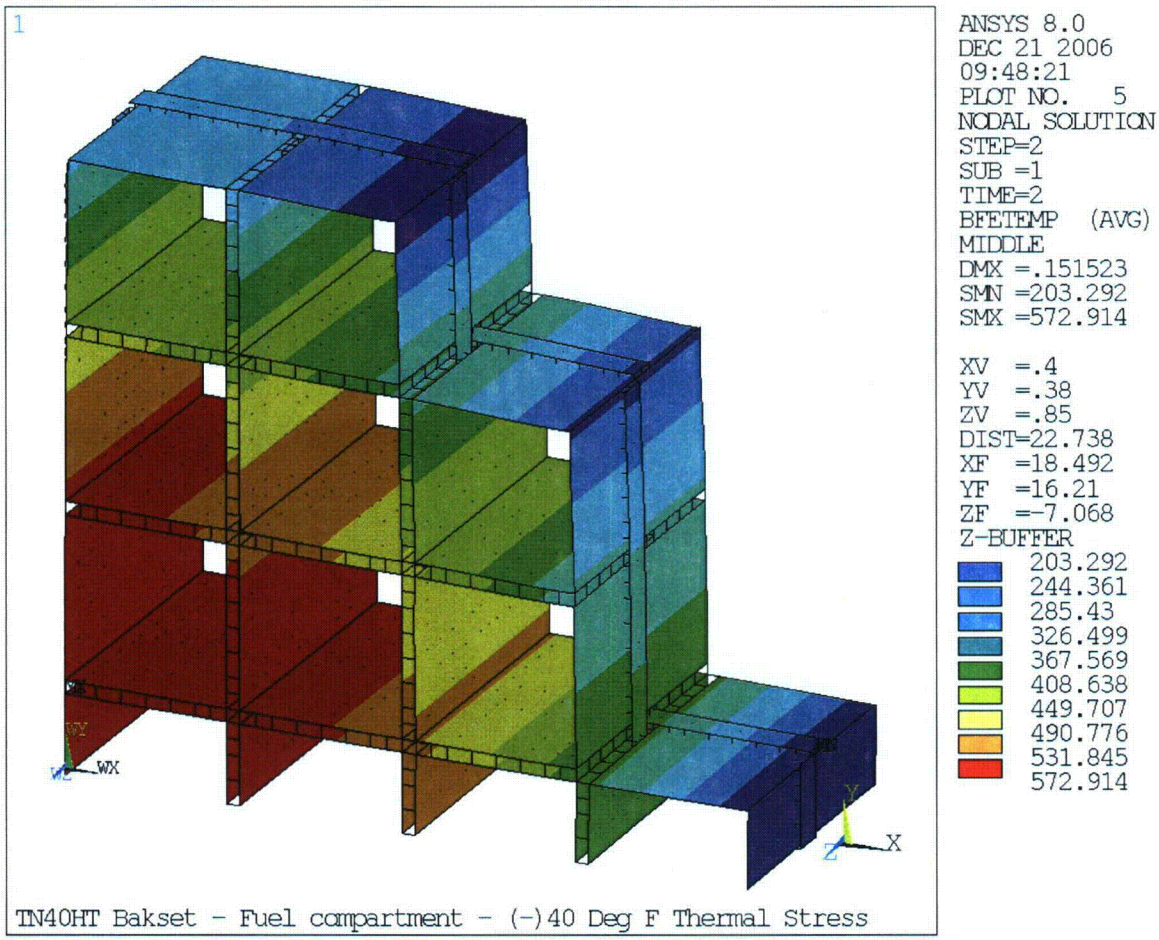

FIGURE A4B.1-5
FUEL COMPARTMENT FINITE ELEMENT MODEL TEMPERATURE DISTRIBUTION
-40 °F AMBIENT

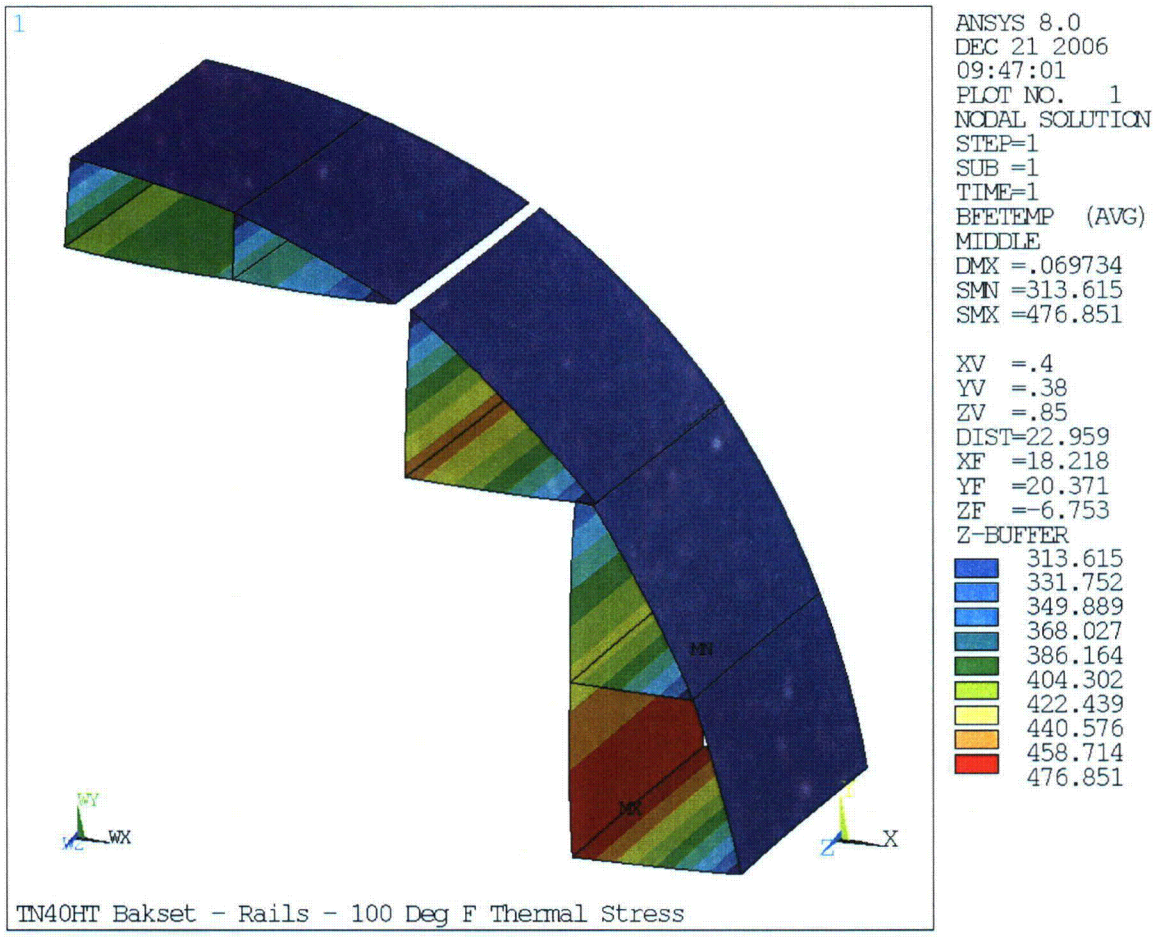

FIGURE A4B.1- 6
TRANSITION RAILS FINITE ELEMENT MODEL TEMPERATURE DISTRIBUTION
100 °F AMBIENT

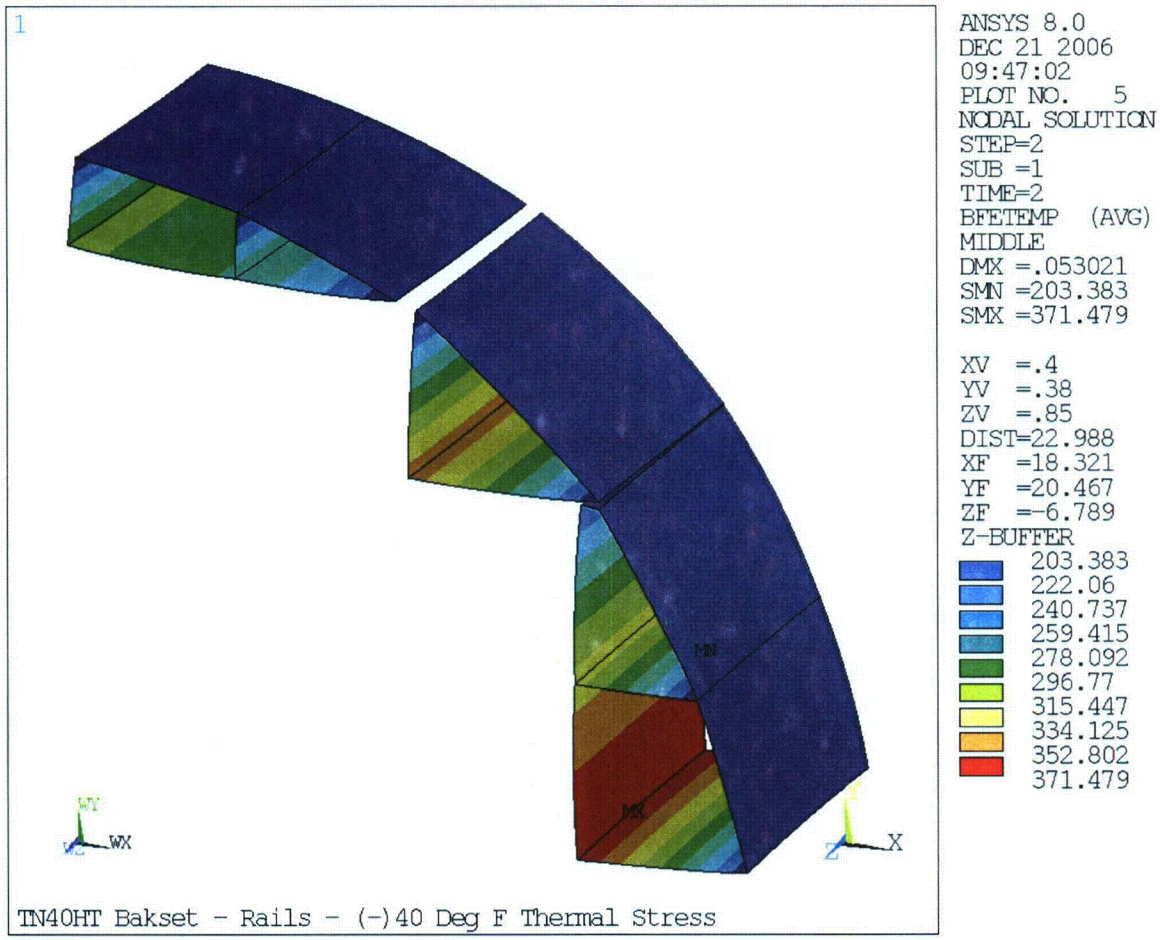

FIGURE A4B.1-7
TRANSITION RAILS FINITE ELEMENT MODEL TEMPERATURE DISTRIBUTION
-40 °F AMBIENT

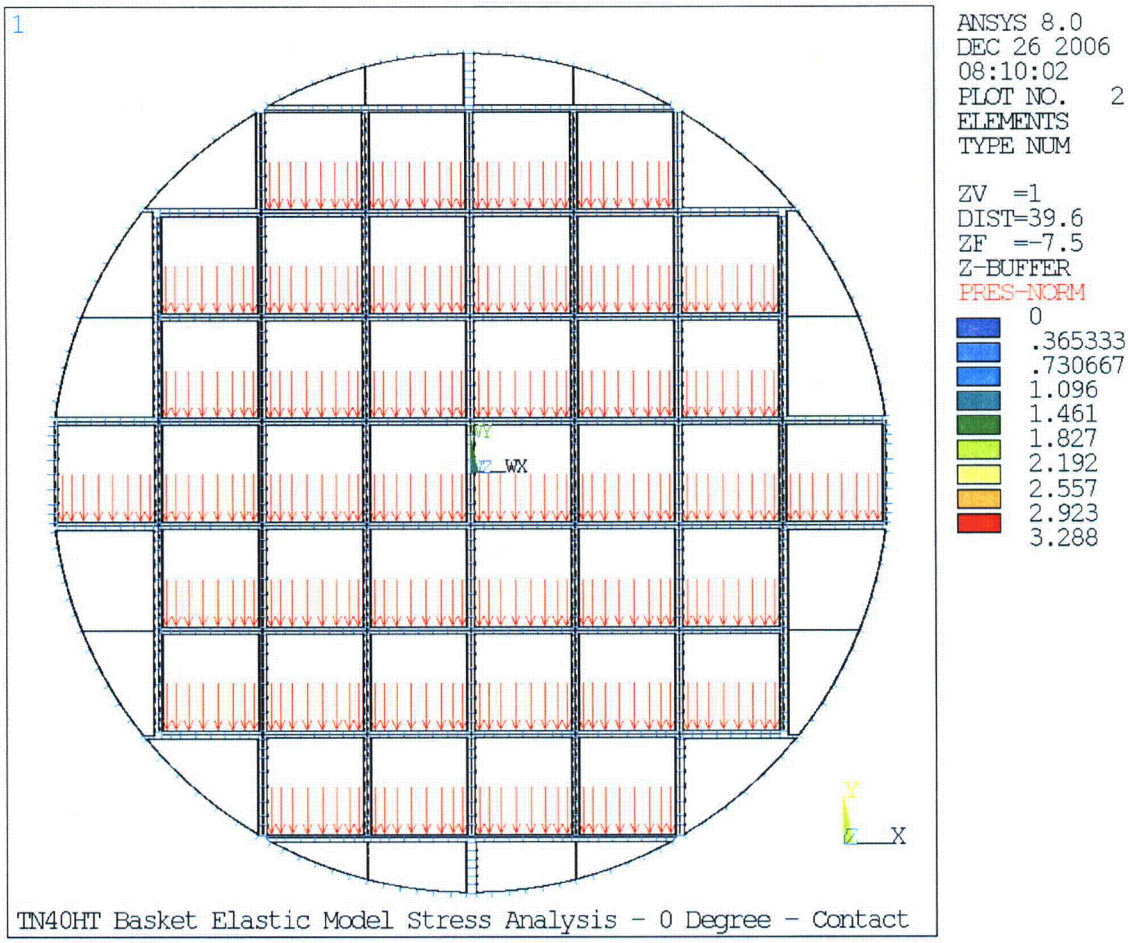

FIGURE A4B.1-8
BASKET FINITE ELEMENT MODEL APPLIED PRESSURES – 0° AZIMUTH

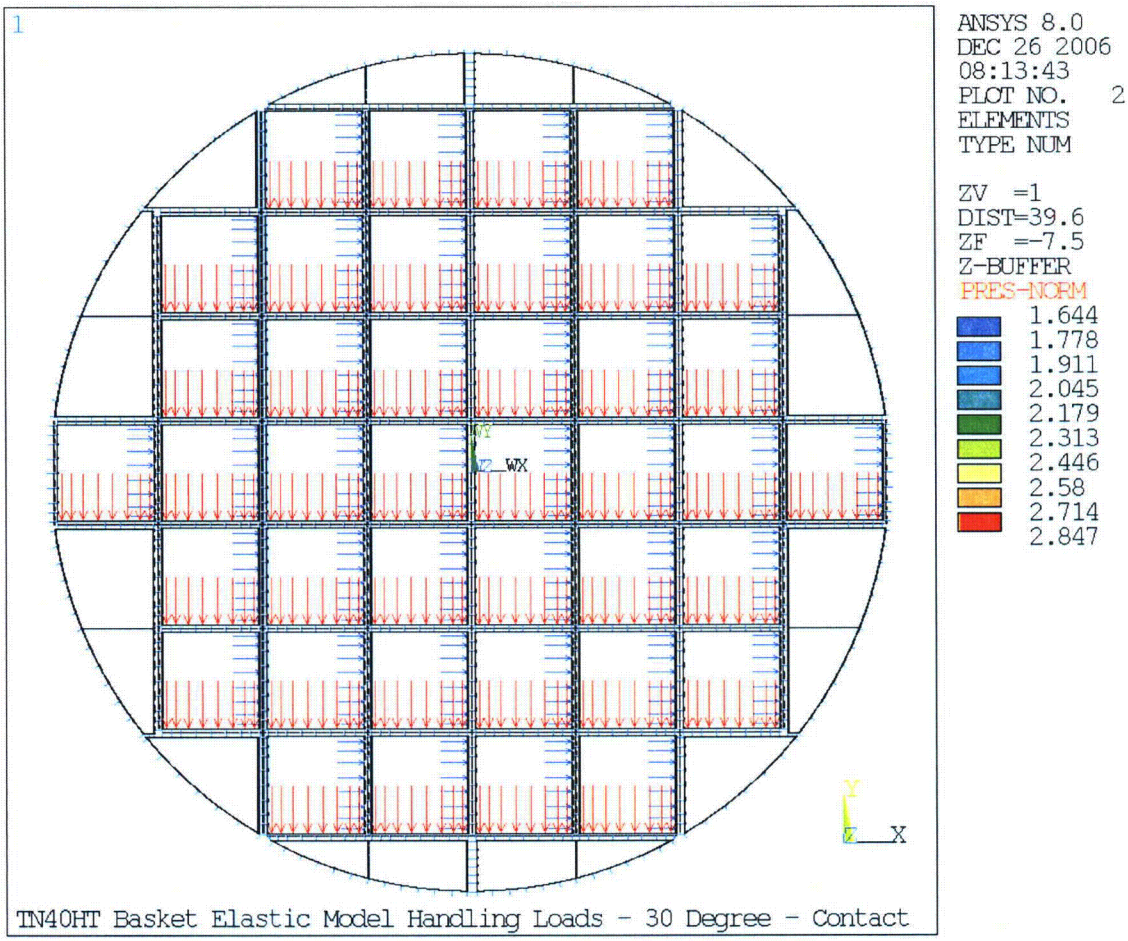

FIGURE A4B.1-9
BASKET FINITE ELEMENT MODEL APPLIED PRESSURES – 30° AZIMUTH

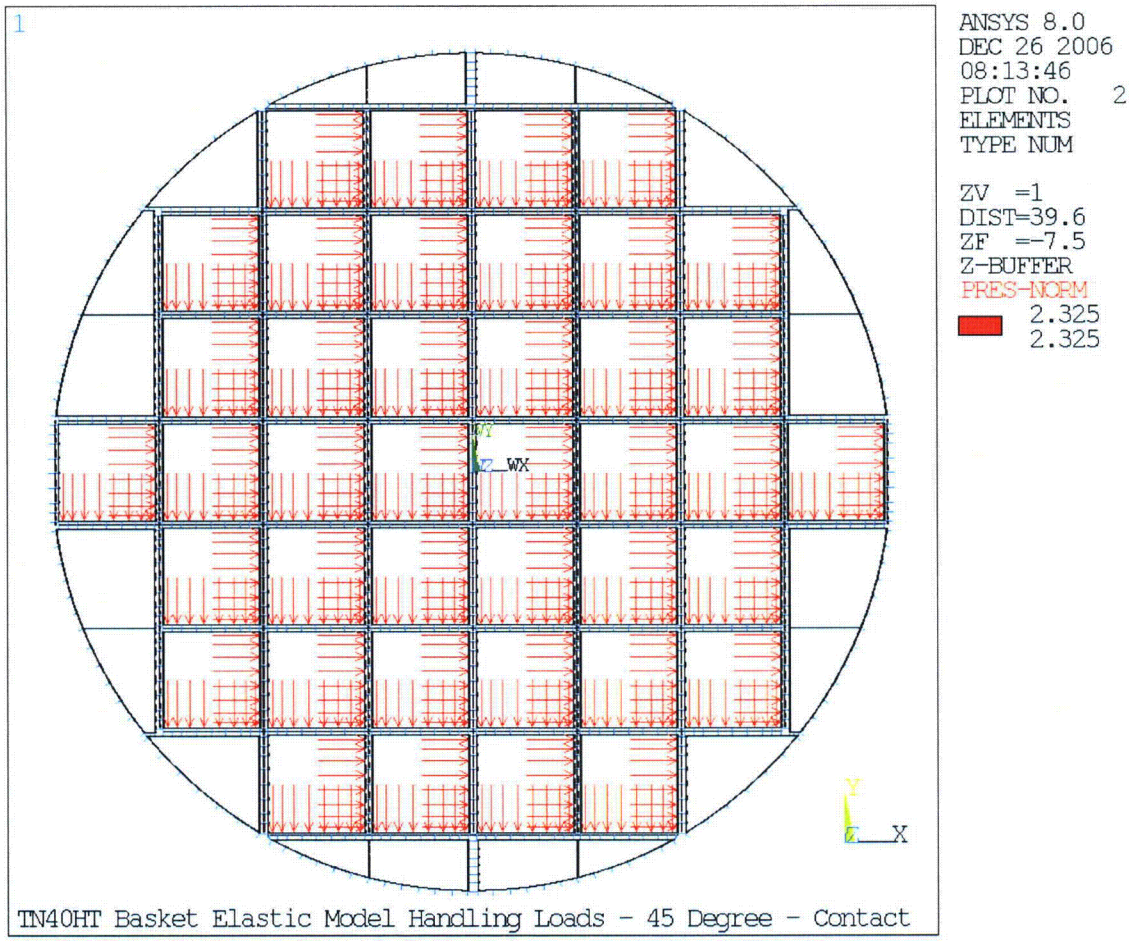

FIGURE A4B.1-10
BASKET FINITE ELEMENT MODEL APPLIED PRESSURES – 45° AZIMUTH

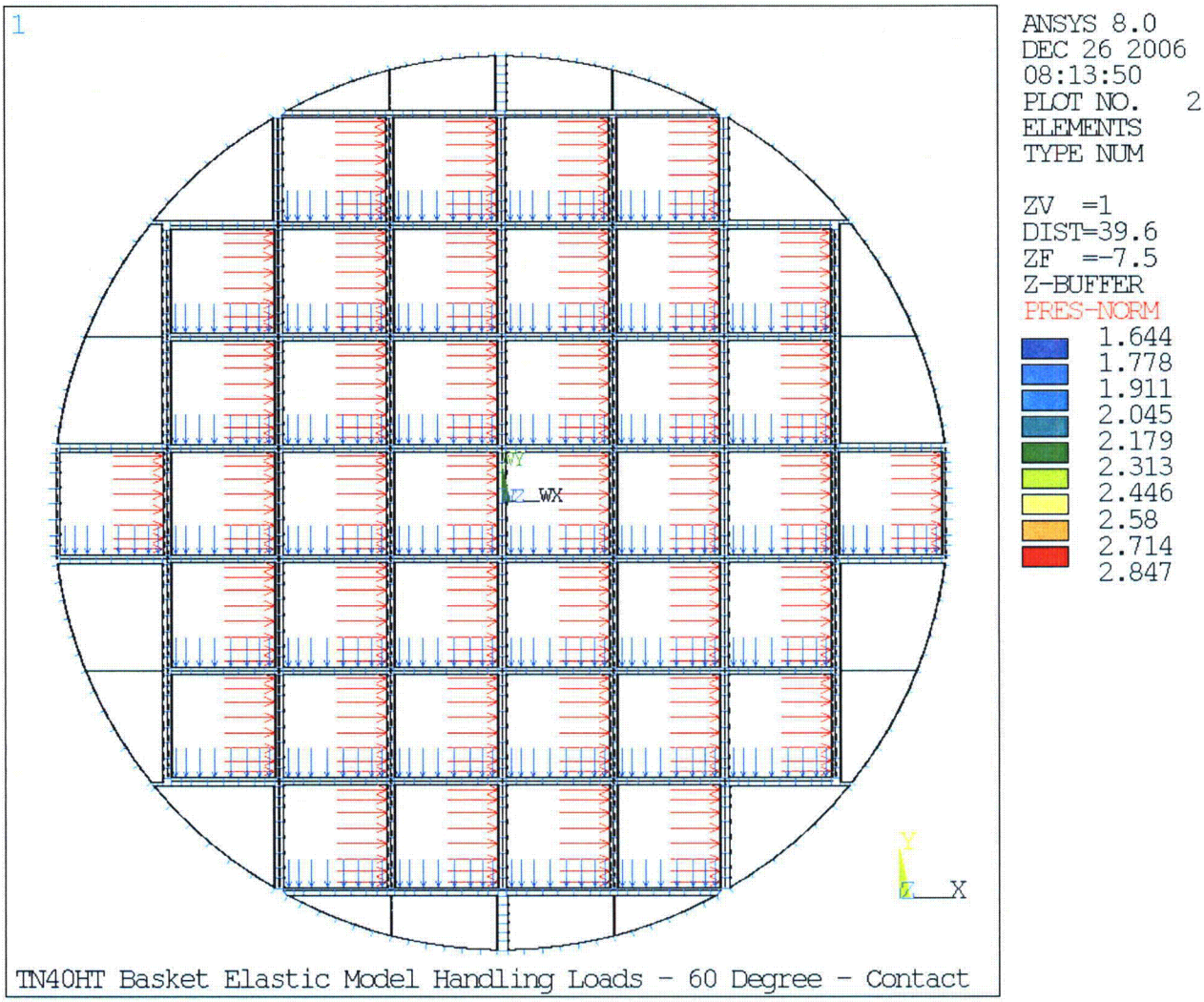

FIGURE A4B.1-11
BASKET FINITE ELEMENT MODEL APPLIED PRESSURES – 60° AZIMUTH

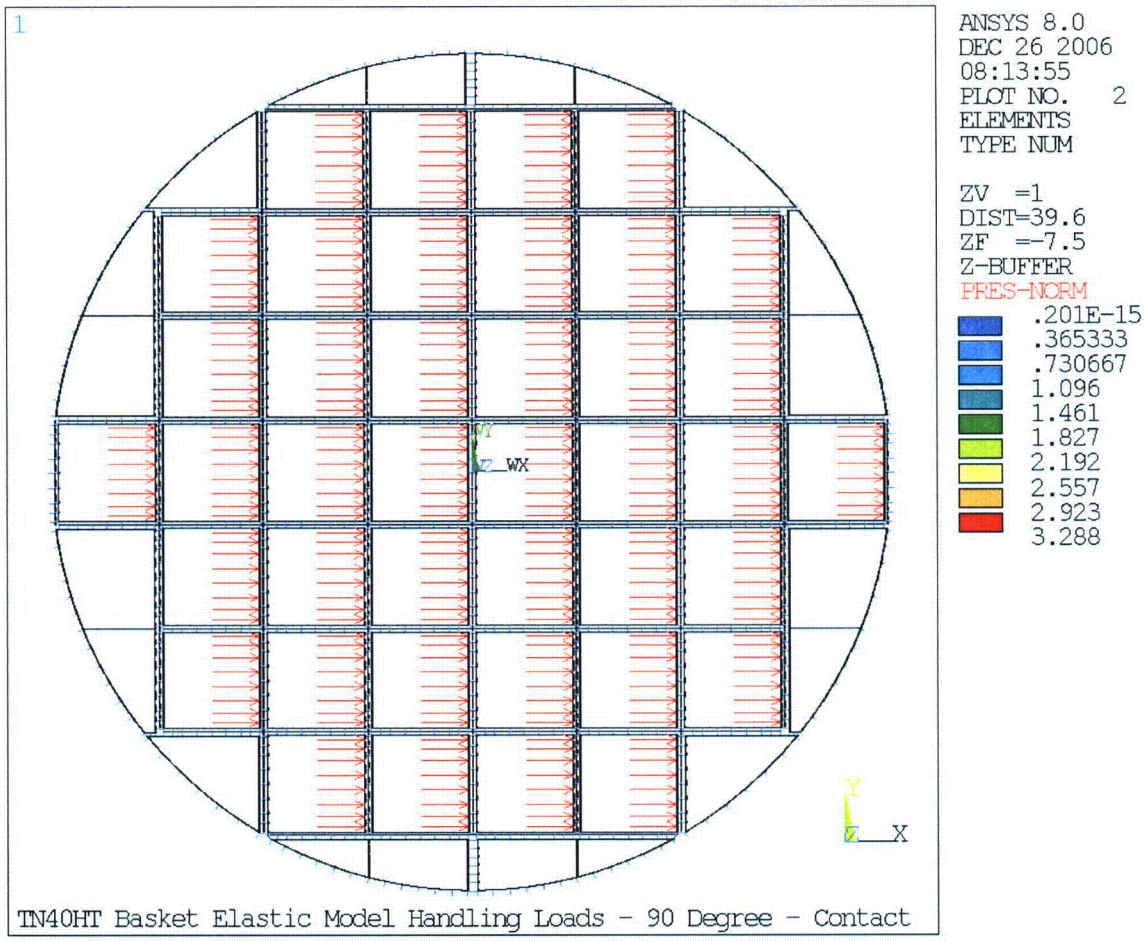

FIGURE A4B.1-12
BASKET FINITE ELEMENT MODEL APPLIED PRESSURES – 90° AZIMUTH

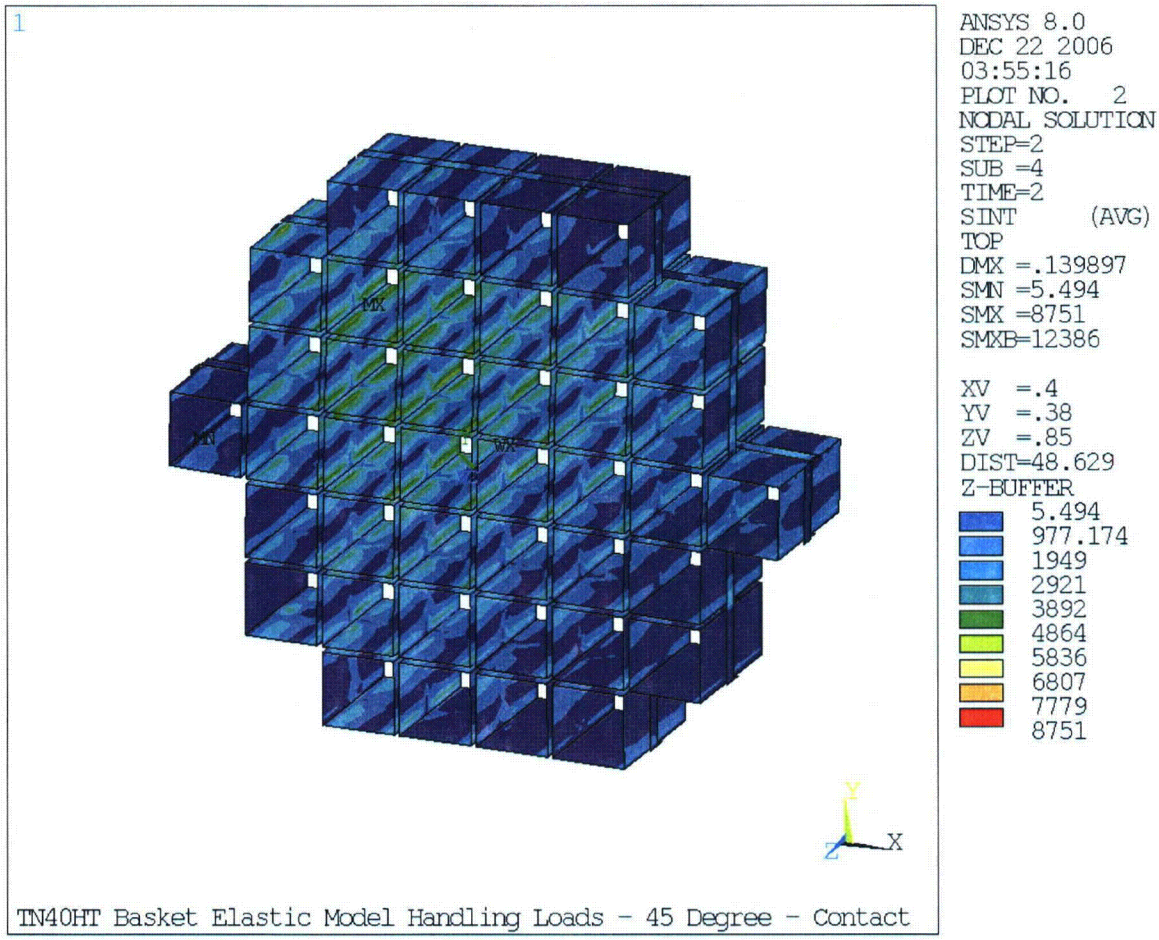

FIGURE A4B.1-13
NORMAL CONDITION 45° AZIMUTH LATERAL LOAD - FUEL COMPARTMENTS – TOP SURFACE MEMBRANE PLUS BENDING STRESS INTENSITY

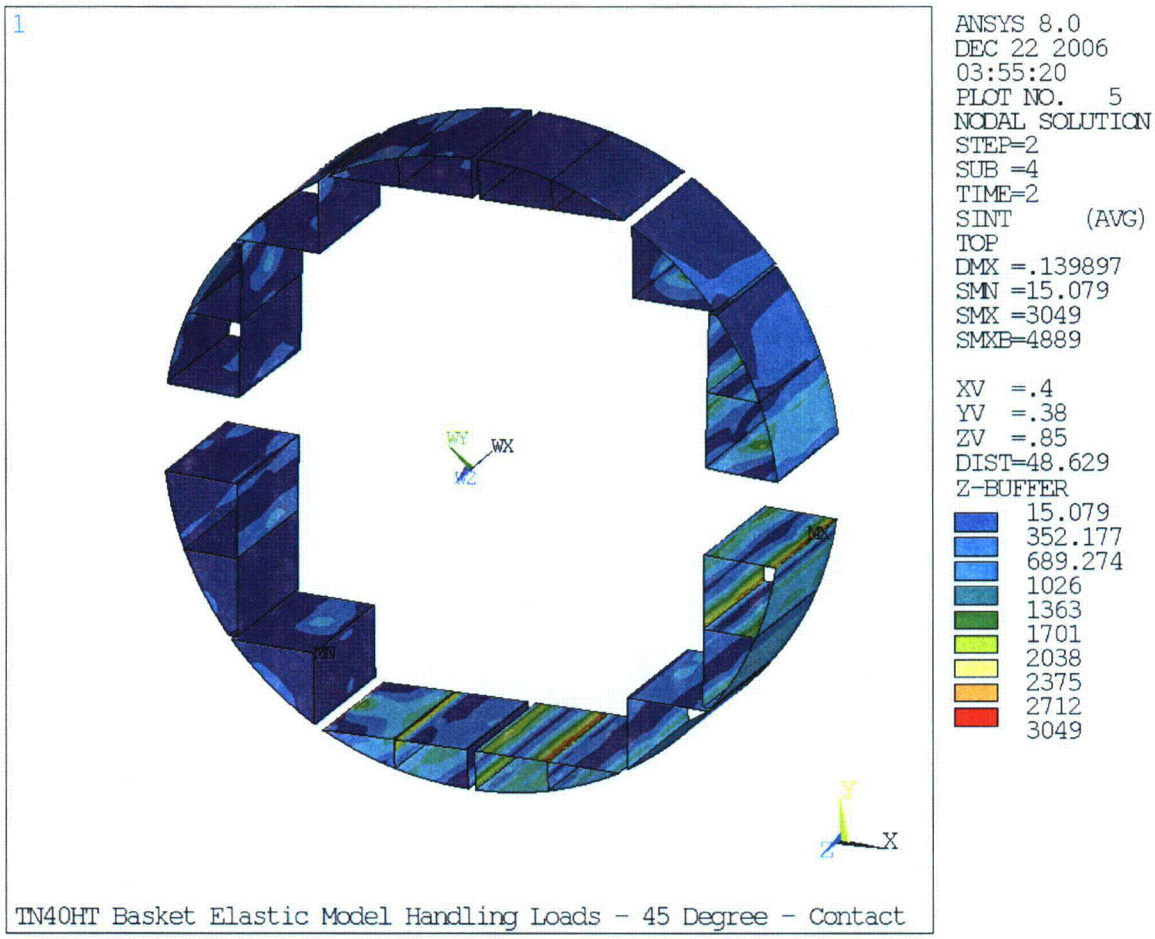

FIGURE A4B.1-14
NORMAL CONDITION 45° AZIMUTH LATERAL LOAD – PERIPHERAL RAILS TOP SURFACE MEMBRANE PLUS BENDING STRESS INTENSITY

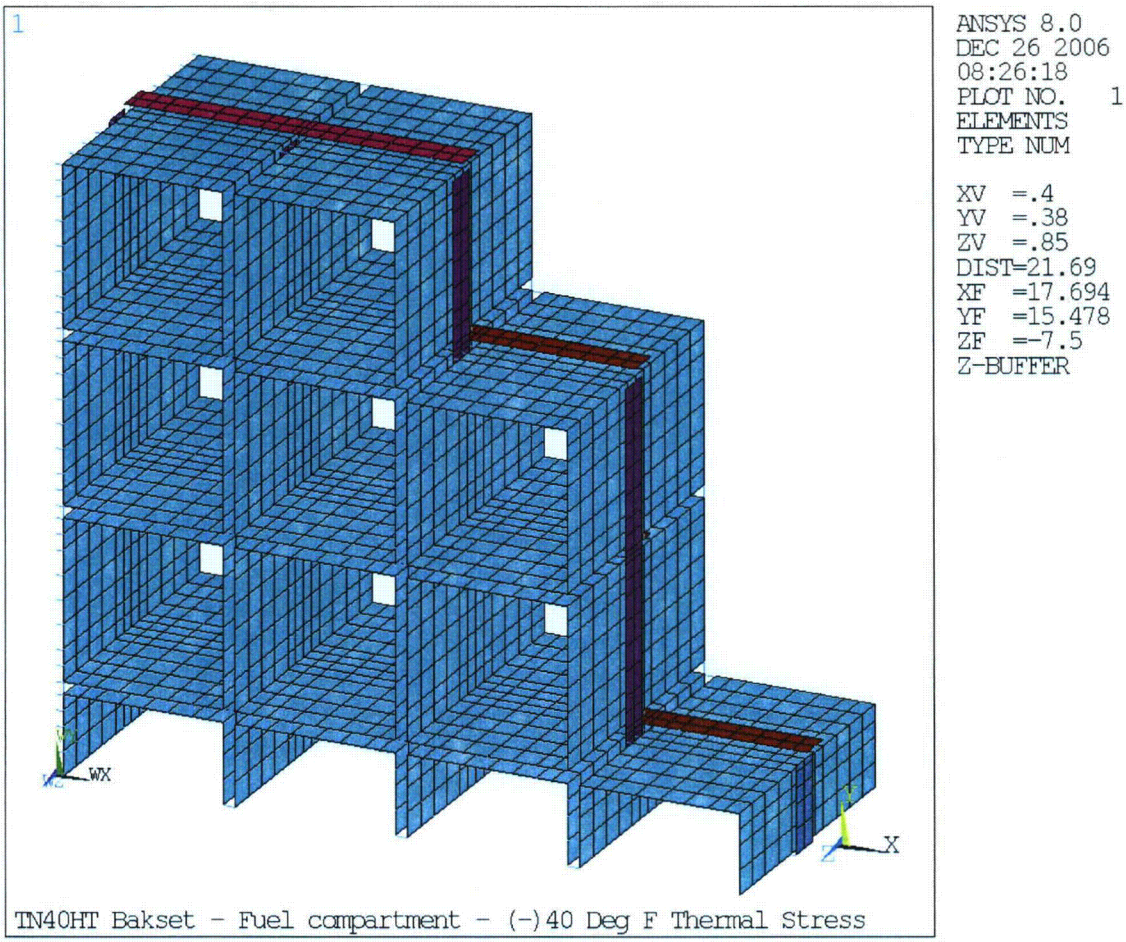

FIGURE A4B.1-15
THERMAL STRESS ANALYSIS FINITE ELEMENT MODEL - FUEL COMPARTMENT

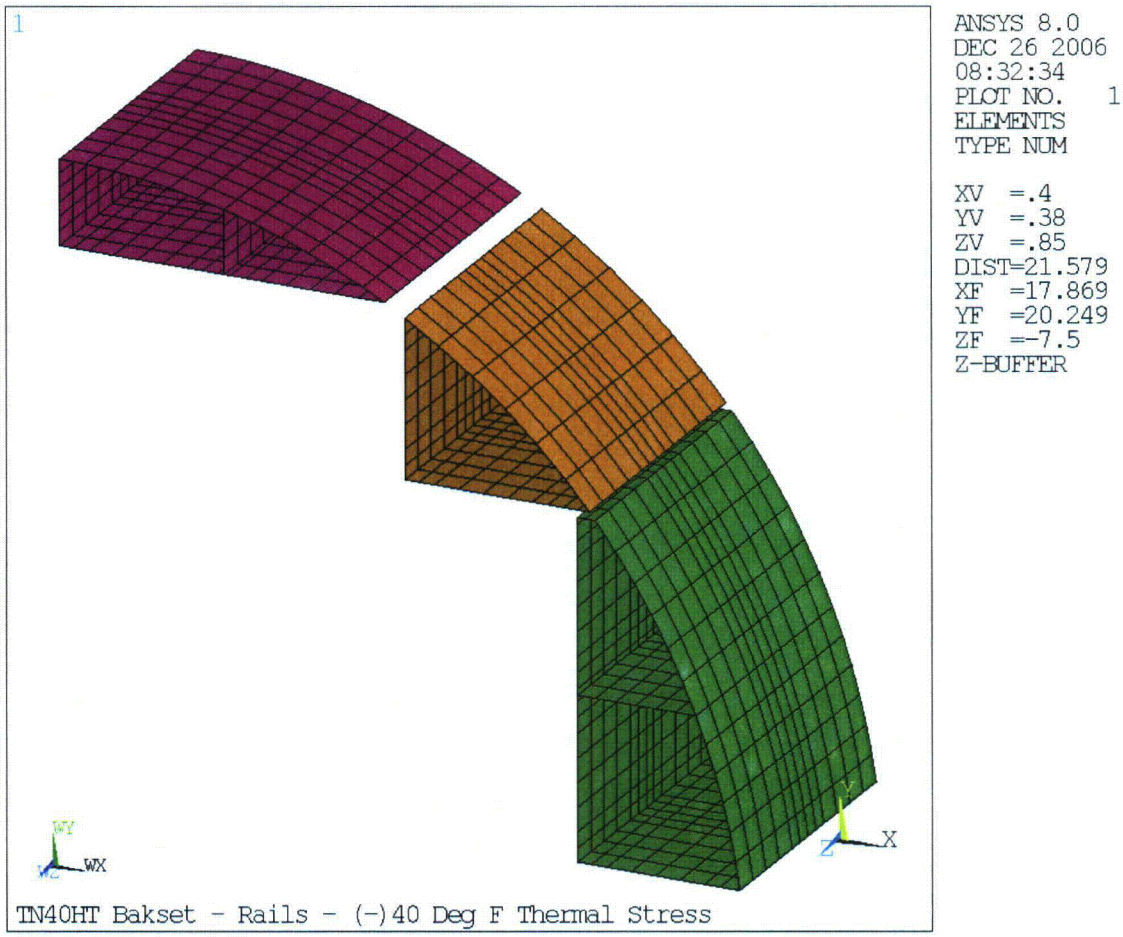

FIGURE A4B.1-16
THERMAL STRESS ANALYSIS FINITE ELEMENT MODEL - RAILS

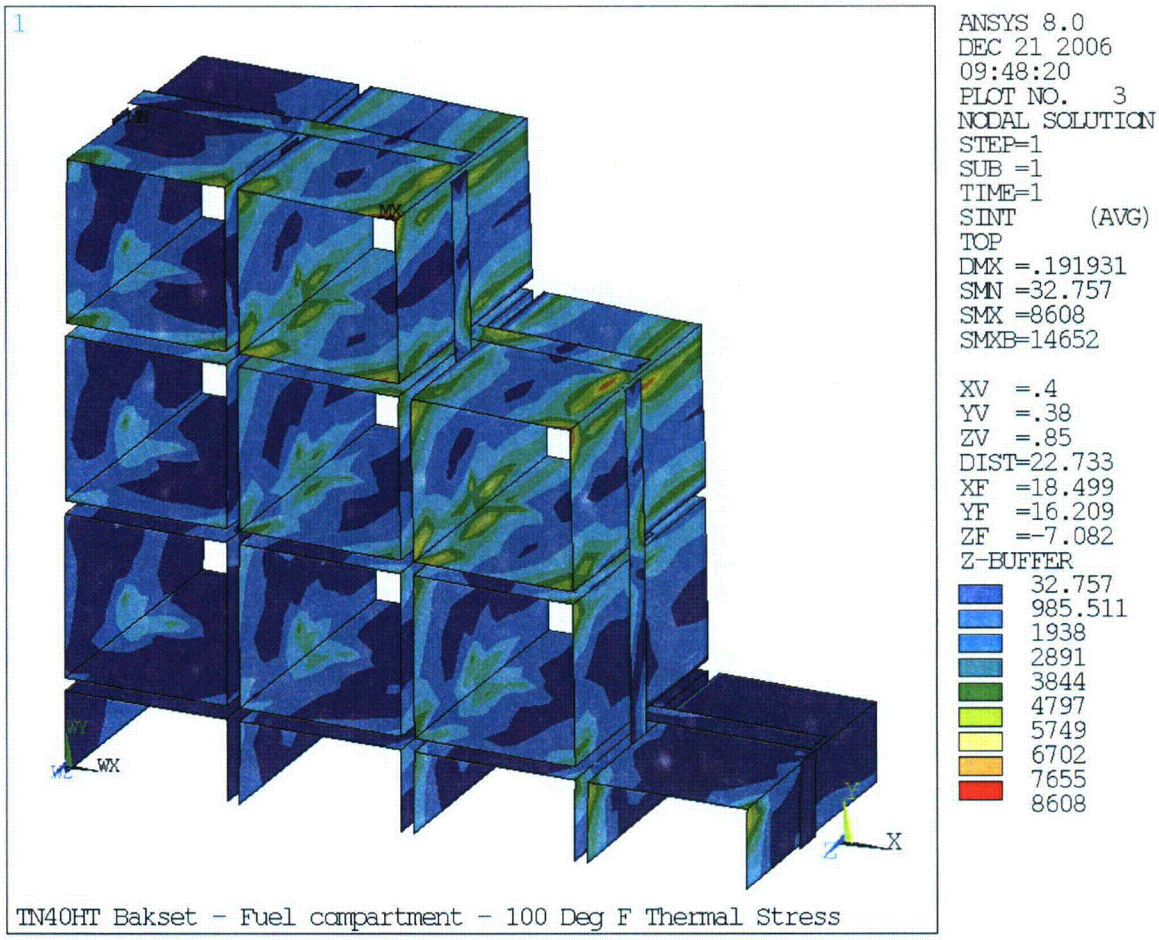

FIGURE A4B.1-17
THERMAL STRESS ANALYSIS – MAXIMUM FUEL COMPARTMENT STRESS INTENSITY FOR 100° F AMBIENT TOP SURFACE

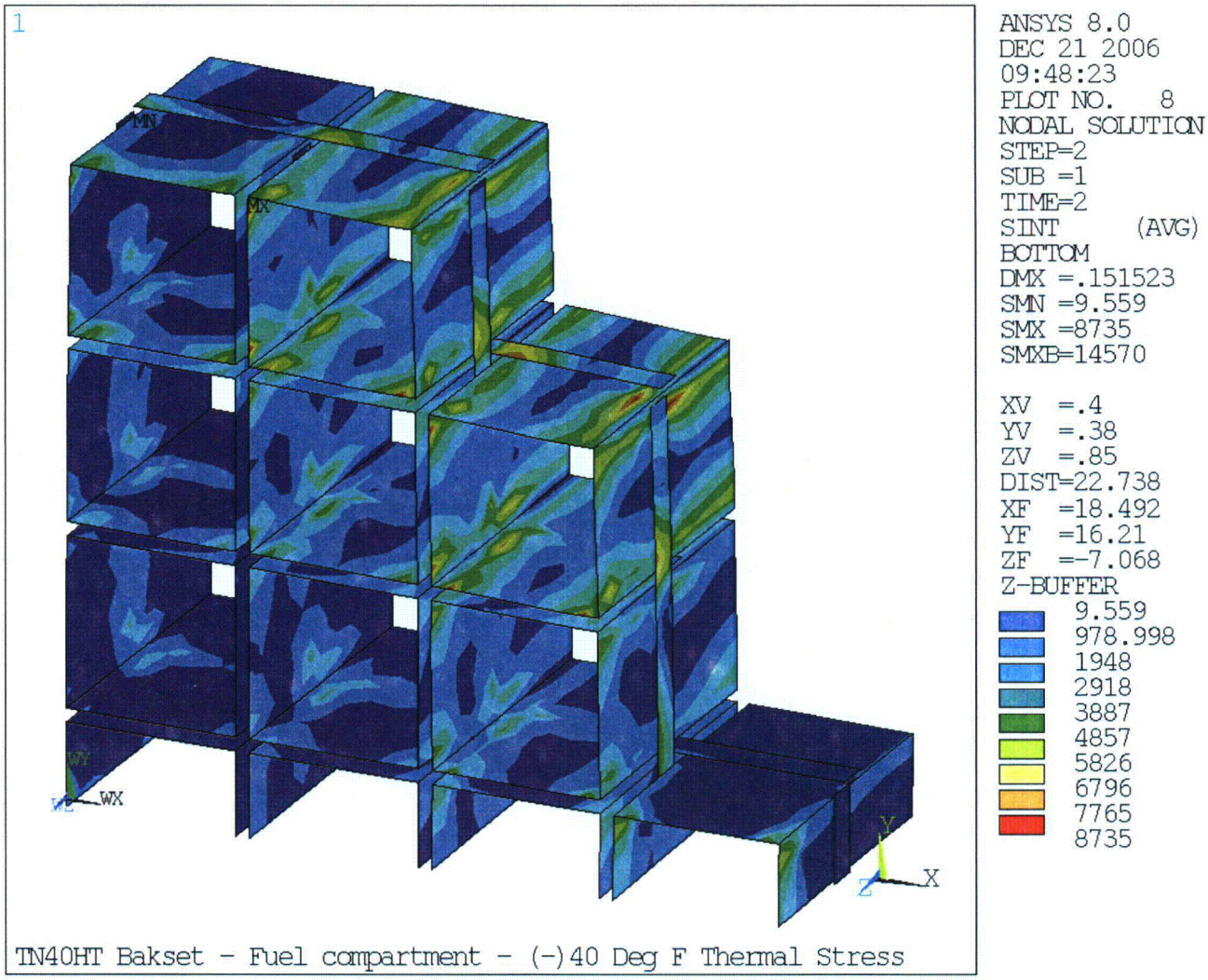

FIGURE A4B.1-18
THERMAL STRESS ANALYSIS – MAXIMUM FUEL COMPARTMENT STRESS INTENSITY FOR -40° F AMBIENT BOTTOM SURFACE

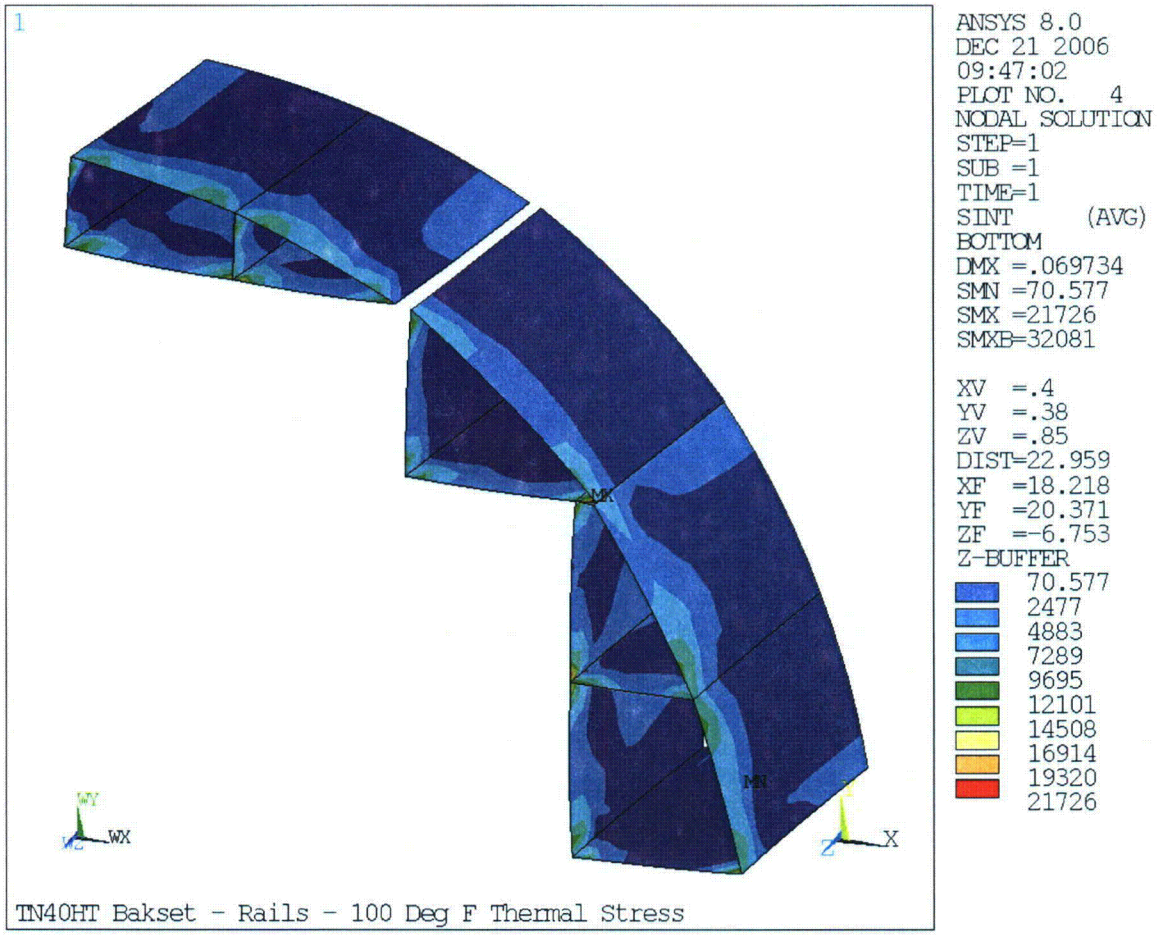

FIGURE A4B.1-19
THERMAL STRESS ANALYSIS – MAXIMUM RAILS STRESS INTENSITY FOR 100 °F AMBIENT BOTTOM SURFACE

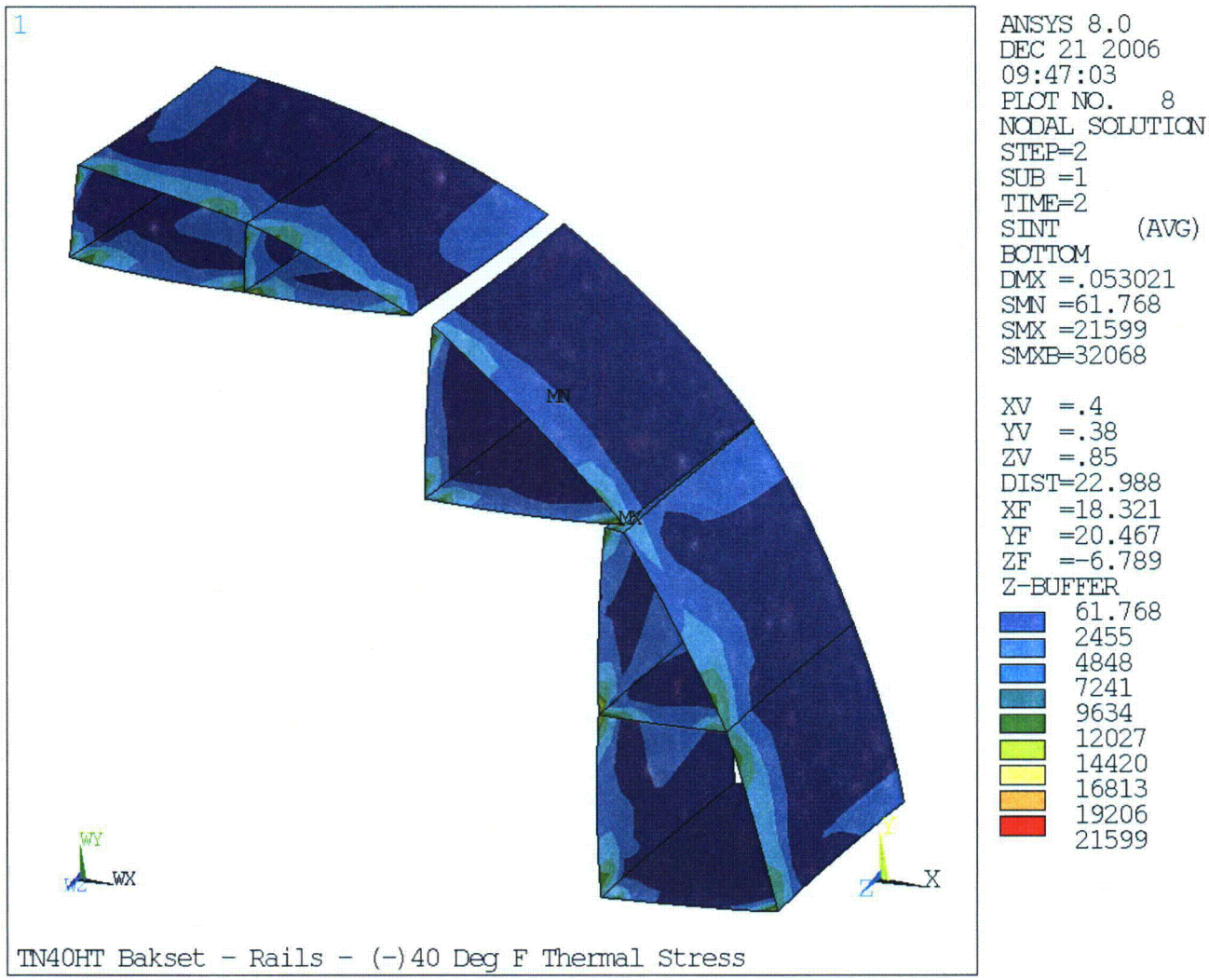

FIGURE A4B.1-20
THERMAL STRESS ANALYSIS – MAXIMUM RAILS STRESS INTENSITY FOR -40 °F AMBIENT BOTTOM SURFACE

SECTION A5

STORAGE SYSTEM OPERATIONS

A5.1 OPERATION DESCRIPTION

The TN-40HT cask was designed to use the same equipment as the TN-40 cask. As a consequence of this design objective, the operation of the TN-40 cask, as described in Section 5, is applicable to the operation of the TN-40HT cask. Therefore; rather than duplicating discussions and information already presented, the discussion of the TN-40HT storage system operation will be accomplished by referring to the appropriate section in Section 5 noting any necessary exceptions.

A5.1.1 NARRATIVE DESCRIPTION

The narrative of the storage system operation in Section 5.1.1 is applicable to the operation of the TN-40HT casks.

A5.1.2 FLOW SHEETS

The information outlined in Section 5.1.2 is applicable to the TN-40HT casks except for the location of the radiation exposure determination for the TN-40HT cask which is located in Section A7.

A 5.1.3 IDENTIFICATION OF SUBJECTS FOR SAFETY AND RELIABILITY ANALYSIS

A5.1.3.1 CRITICALITY PREVENTION

The information in Section 5.1.3.1 is applicable to the TN-40HT casks except for the location of the criticality discussion which is located in Section A3.3.4.

A5.1.3.2 INSTRUMENTATION

The information in Section 5.1.3.2 is applicable to the TN-40HT casks except for the location of the description of the transmitters which is located in Section A3.3.3.

A5.1.3.3 MAINTENANCE TECHNIQUES

The information in Section 5.1.3.3 is applicable to the TN-40HT casks.

A5.2 CONTROL ROOM AND CONTROL AREAS

The information in Section 5.2 is applicable to the TN-40HT casks.

A5.3 SPENT FUEL ACCOUNTABILITY PROGRAM

The information in Section 5.3 is applicable to the TN-40HT casks.

A5.4 SPENT FUEL TRANSPORT TO ISFSI

The information in Section 5.4 is independent of cask design.

A5.5 SPENT FUEL TRANSFER TO TRANSPORT CASK

The information in Section 5.5 is applicable to the TN-40HT casks.

A5.6 REFERENCES

None.

SECTION A6

WASTE MANAGEMENT

A6.1 DESIGN

The information outlined in Section 6.1 is applicable to the TN-40HT casks except for the location of the decommissioning plan for the TN-40HT casks which is located in Section A4.6.

A6.2 REFERENCES

The references listed in Section 6.2 are also applicable to the TN-40HT casks and there are no additional references associated with Section A6.

SECTION A7

RADIATION PROTECTION

A7.1 ENSURING THAT OCCUPATIONAL RADIATION EXPOSURES ARE AS LOW AS REASONABLY ACHIEVABLE (ALARA)

A7.1.1 POLICY CONSIDERATIONS AND ORGANIZATION

The information in Section 7.1.1 is independent of cask design.

A7.1.2 DESIGN CONSIDERATIONS

The information in Section 7.1.2 is also applicable to the TN-40HT casks.

A7.1.3 OPERATIONAL CONSIDERATIONS

The information outlined in Section 7.1.3 is applicable to the TN-40HT casks except for the location of the description of the radiation protection design features is located in Section A7.3.

A7.2 RADIATION SOURCES

A7.2.1 CHARACTERIZATION OF SOURCES

There are five principal sources of radiation associated with cask storage that are of concern for radiation protection:

- Primary gamma radiation from spent fuel;
- Primary neutron radiation from spent fuel (both alpha-n reactions and spontaneous fission);
- Gamma radiation from activated fuel structural materials and fuel inserts;
- Capture gamma radiation produced by attenuation of neutrons by shielding material of the cask; and
- Neutrons produced by sub-critical fission in fuel.

The first three sources of radiation are evaluated using SAS2H/ORIGEN-S modules of the SCALE (Reference 1) code with the 44 group ENDF/B-V library. The capture gamma radiation and sub-critical multiplication are handled as part of the shielding analysis which is performed with MCNP5 (Reference 2).

The fuel assemblies acceptable for storage in the TN-40HT are listed in Table A3.1-1. The largest uranium loading results in the largest source term at the design basis enrichment and burnup. Table A7.2-1 provides additional fuel assembly design characteristics for the fuel designs.

The 14x14 Westinghouse standard is the design basis fuel for shielding purposes because it has the highest initial heavy metal loading (modeled as 0.410 Mtu), and therefore results in the highest radioactive source terms for a given irradiation history. Initial enrichment of 3.4 wt% U235, assembly average burnup of 60 GWd/MTU, and cooling time of 18 years complete the specification of the design basis fuel. A conservative two-cycle irradiation at a constant specific power of 20 MW/assy is utilized with a 20 day down time between each cycle to calculate the source terms for the design basis fuel.

The source terms are generated for the active fuel region, the plenum region, and each end region. Irradiation of the fuel assembly structural materials (including the fuel inserts, plenum, and end fittings) are included as an irradiation in the fuel zone with appropriate flux reduction factors as described below. The fuel assembly hardware materials and masses on a per assembly basis are listed in Table A7.2-2. Table A7.2-3 provides the material composition of fuel assembly hardware materials. Cobalt impurities are included in the SAS2H model. In particular, the cobalt impurities in Inconel-718, Zircaloy and Stainless Steel 304 are 0.469%, 0.001% and 0.08%, respectively.

Table A7.2-4 contains the masses of the various hardware materials present in the four principal regions of the fuel assembly. The masses for the materials in the top end fitting, the plenum, and the bottom fitting regions are multiplied by the activation ratios 0.1, 0.2 and 0.2, respectively (Reference 5), to correct for the spatial and spectral changes of the neutron flux outside of the active fuel zone.

As an example, the effective cobalt mass in the top end region is determined by taking the mass of the material listed in Table A7.2-4 times the cobalt impurity percentage listed above, which are also shown on Table A7.2-3. The resultant product is then adjusted by the above activation ratio:

Co = 6.30 kg (stainless steel, Table A7.2-4)*0.08% (Table A7.2-3) +
0.508 kg (Inconel Table A7.2-4)* 0.469% (Table A7.2-3) = 0.0074 kg
effective Co (after applying the 0.1 activation ratio) = 0.00074 kg

The material compositions of the fuel assembly hardware are included in the SAS2H/ORIGEN-S model on a per assembly basis. The cobalt content for each fuel assembly region utilized in the source term calculation is obtained from Table A7.2-4 reduced by the activation ratios.

Fuel Insert Thimble Plug Device (TPD)

The TPD materials and masses for each irradiation zone are listed in Table A7.2-5. The TPD is irradiated to an equivalent host assembly life burnup of 125 GWd/MTU. The model assumes that the TPD is irradiated in an assembly each with an initial enrichment of 3.85 weight % U-235. The fuel assembly, containing the TPD, is burned for three cycles with a burnup of 15 GWd/MTU per cycle. This is equivalent to an assembly life burnup of 45 GWd/MTU over the three cycles. The results are increased by a factor of 2.7778 to achieve the equivalent 125 GWD/MTU source. The source term for the TPD is taken at 16 years cooling time.

Fuel Insert Burnable Poison Rod Assembly (BPRA)

The BPRA materials and masses for each irradiation zone are also listed in Table A7.2-5. These materials are irradiated in the appropriate zone for three cycles of operation. The model assumes that the BPRA is irradiated in an assembly each with an initial enrichment of 3.85 weight % U-235. The fuel assembly containing the BPRA is burned for three cycles with a burnup of 10 GWd/MTU per cycle. This is equivalent to an assembly life burnup of 30 GWd/MTU over the three cycles. The source term for the BPRA is taken at 18 years cooling time.

Reactor Coolant System Boron Concentration

Soluble boron in the reactor coolant system is the primary reactivity control mechanism in a PWR. It is important to include boron in the depletion model because it is a thermal neutron absorber and its presence hardens the neutron spectrum. The presence of boron reduces thermal absorption in U-235 and as a second-order effect, increases epithermal absorption in U-238, increasing the buildup of actinides such as Cm-244, the major contributor to the neutron source term.

Typical cycle average boron concentration is on the order of 900 ppm. For modeling purposes in the current analysis, 600 ppm was chosen to be the average boron concentration for the first irradiation cycle, with the second having 95% of this value. Studies were performed showing that the use of a lower boron concentration leads to a tiny underproduction of decay heat, neutron and gamma source strength in the energy groups that contribute the most to casks dose rates. The under predictions are within 1% of those determined with the lower boron concentration and thus have essentially no effect on dose rates and cooling times.

Reactor Coolant System Temperature

Moderator temperatures can vary between 500-600 °F. The long-term operating temperature affects the end-of-life reactivity (as a second order effect) and the total actinide inventory. Higher average moderator T_{av} reduces the average moderator density, which reduces neutron moderation during operation. This again results in increased epithermal absorption in U-238 which results in an increase in the actinide inventory in the fuel for a given total fuel burnup. A moderator density of 0.733 g/cc (which corresponds to 566°F at an operating pressure of 2250 psia) is used in the SAS2H calculation.

Fuel and Cladding Temperature

Representative temperatures of 840 K and 620 K were selected for the fuel and clad, respectively.

A7.2.2 AIRBORNE RADIOACTIVE SOURCES

In addition to the source terms generated for the shielding analysis, the SAS2H irradiation also provides the bounding radiological source terms for confinement. These results are provided in Table A7.2-6.

A7.2.3 AXIAL SOURCE DISTRIBUTION

Reference 4 provides axial PWR burnup profiles as a function of fuel assembly burnup ranges. For the Prairie Island high burnup fuel to be stored in the TN-40HT cask, the burnup profile for > 46 GWD/MTU was selected for use in this analysis. Figure A7.2-1 represents this profile.

The conservative axial profile containing 18 axial zones is utilized in the shielding evaluation. The axial zones are approximately equal and each zone represents between 5% and 6% of the total active fuel zone. The peaking factors range from a slightly more than 0.5 at the bottom and top, to a maximum of 1.11 just below the middle. The gamma source is directly proportional to the burnup and the neutron source is proportional to the fourth power of the burnup. This data is presented in Table A7.2-7 and shown in Figure A7.2-2. For the gamma distribution, the average value is around 1.0. However, for the neutron distribution, the average value of the distribution is greater than 1.0. The average value of the axial neutron distribution may be interpreted as the ratio of the true total neutron source in an assembly to the neutron source calculated by SAS2H/ORIGEN-S for an average assembly burnup. Therefore, to properly correct the magnitude of the neutron source, the neutron source per assembly, reported in Table A7.2-8, is multiplied by the average value of the neutron source distribution as reported in Table A7.2-7.

A7.2.4 GAMMA SOURCE

The gamma source terms for the 14x14 design basis fuel assembly are provided in Table A7.2-8. The gamma source spectra are presented in the 18-group structure consistent with the SCALE 27n-18γ cross section library. The conversion of the source spectra from the default ORIGEN-S energy grouping to the SCALE 27n-18γ energy grouping is performed directly through the ORIGEN-S code. The SAS2H/ORIGEN-S input file is provided in Appendix A7B.

The gamma source for the fuel assembly hardware is primarily from the activation of cobalt. This activation contributes primarily to SCALE Energy Groups 36 and 37.

For this analysis, it is assumed that the fuel insert source is a composite source; a BPRA in the core region and a TPD in the plenum and top fitting region. This bounds both types since the TPD does not extend into the core region but has a higher source term in the plenum and top fitting regions than a BPRA. The cumulative burnup of the fuel assembly(s) where the BPRA resided during reactor operation is assumed to be 30 GWd/MTU and the BPRA has cooled for 18 years. The cumulative burnup of the TPD host assemblies is assumed to be 125 GWD/MTU and the TPD has cooled for 16 years. The fuel insert source is shown in Table A7.2-9.

A7.2.5 NEUTRON SOURCE

Table A7.2-8 provides the total neutron source for the 14x14 design basis fuel assembly. The neutron source term consists primarily of spontaneous fission neutrons (largely from Cm-244) with (α,O-18) sources of lesser importance, both causing secondary fission neutrons. The overall spectrum is well represented by the Cm-244 fission spectrum. For the MCNP analyses, the default Cm-244 energy spectrum is utilized.

A7.2.6 FUEL QUALIFICATION

This section provides the basis for qualification of the design basis fuel chosen for the shielding analysis of the TN-40HT cask. The objective is to demonstrate that the fuel assemblies with the parameters corresponding to design basis fuel result in the highest calculated dose rate so that bounding shielding analysis can be performed by utilizing these design basis source terms. In order to determine the bounding spent fuel parameters (design basis fuel assembly), the candidate assembly parameters are ranked by their relative radiation source strengths. A simple 2-D shielding calculation based on a representation of the TN-40HT cask is performed and the radiation dose rates at 2m from the side surface are determined. The spent fuel parameters that yield the highest total dose rate (gamma + neutron) are considered the design basis for shielding calculations.

These analyses were carried out using the SAS2H depletion module from the SCALE (Reference 1) computer software and MCNP (Reference 2). For all SAS2H calculations the SCALE 44 group ENDF/B-V (44groupndf5) library was used. MCNP calculations used the default cross section libraries.

A simplified MCNP model was utilized to calculate a response function at 2 meters from the side surface of a cask. The response function is simply a source-to-dose conversion function and is representative of the TN-40HT cask shielding configuration. A representative response function is adequate for ranking the impact of burnup, enrichment and cooling time combination on dose rate. In essence the dose rate at 2 meters is calculated for each gamma energy group of the source as calculated by SAS2H. For neutrons, since a bounding energy spectrum is used, the response function calculated is just a total source to dose factor.

The response function is then utilized with SAS2H models to estimate the 2 meter side dose rate as a function of different burnup, enrichment and cooling time combinations. Other information, such as the decay heat per fuel assembly and the cooling time are also collected.

The calculated dose rate and decay heat along with the cooling time are then utilized to determine the bounding radiological source term. The final design basis radiological source term is generated by adding the fuel insert source term to the fuel/hardware source term.

The evaluation with the response function showed the design basis fuel assembly with parameters of 3.4 %wt U-235, 60 GWD/MTU burnup and cooled for 18 years to provide the appropriate bounding source terms. It is important to note that the decay heat for this bounding assembly is 845 watts which is in excess of the allowable limit as discussed in Section A3.

A7.3 RADIATION PROTECTION DESIGN FEATURES

A7.3.1 STORAGE SYSTEM DESIGN DESCRIPTION

The TN-40HT cask has a number of design features which ensure a high degree of integrity for the confinement of radioactive materials and reduction of direct radiation exposures to levels that are as low as practical.

- The casks are loaded, sealed, and decontaminated prior to transfer to the ISFSI.
- The fuel will not be unloaded nor will the casks be opened at the ISFSI.
- The fuel will be stored dry inside the casks, so that no radioactive liquid is available for leakage.
- The casks will be sealed with a helium atmosphere to preclude oxidation of the fuel.
- The casks will be heavily shielded to reduce external dose rates. The shielding design features are discussed below.
- No radioactive material will be discharged during storage.

Shielding for the TN-40HT cask is provided mainly by the thick-walled cask body. For neutron shielding, a borated polyester resin compound surrounds the cask body and a polypropylene disk covers the lid for storage. Additional shielding is provided by the steel shell surrounding the resin layer and by the stainless steel and aluminum/steel structure of the basket.

A7.3.2 SHIELDING

The design of the cask shielding, material of construction, and method of calculating shielding parameters are explained in Appendix A7A. No special features or remote handling of the casks in the ISFSI are proposed. Portable shielding may be used during cask maintenance, if appropriate.

A7.3.3 AREA RADIATION AND AIRBORNE RADIOACTIVITY MONITORING INSTRUMENTATION

As indicated in Section A3.3.5.3, there are no credible events associated with use of the TN-40HT casks which could result in releases of radioactive products or unacceptable increases in direct radiation. Area radiation and airborne radioactivity monitors are therefore not needed at the ISFSI; however, TLDs will be used to record dose rates along the outer (nuisance) fence boundary of the ISFSI

A7.4 ESTIMATED ONSITE COLLECTIVE DOSE ASSESSMENT

Table A7.4-1 shows the estimated design basis occupational exposures to ISFSI personnel during the loading, transport and emplacement of the storage casks. Dose rates utilized to determine occupational exposures to ISFSI personnel during the loading, transport and emplacement of the storage casks are conservatively estimated from those reported in Appendix A7A.

Table A7.4-2 shows the estimated design basis annual exposure for surveillance and maintenance activities. Visual surveillance was based on a walkdown of each of the two pads at a distance no closer than 2 meters to the casks. The dose rate for visual surveillance activities was increased to account for dose rate due to loaded casks already at the ISFSI and to account for short term activities close to the cask.

To estimate dose rates for operability tests and calibration, the worker was assumed to be at the monitoring panel at the perimeter fence entrance and exposed to a dose rate of 4 mrem/hr. During instrumentation and surface defect repairs the worker is assumed to be exposed to a dose rate of 300 mrem/hr that is representative of high surface dose rates on the cask. For major maintenance work, the worker is assumed to be exposed to the 1 meter side dose rate.

Both Table A7.4-1 and Table A7.4-2 provide for each task the estimated time required for the task, number of personnel required, the design basis dose rates and the exposure. The purpose of these tables is to provide an estimated total dose and not to prescribe limits or restrictions on dose rates, times to complete tasks, or number of persons working on tasks. Actual loading and maintenance activities may deviate from those shown in the tables but will be conducted such that exposure is as low as reasonable achievable.

Localized regions of elevated dose rates should be anticipated and minimized with good ALARA practices. Such regions exist due primarily to radiation streaming, including for example, streaming through the vent and drain ports.

To evaluate the additional dose to station personnel from ISFSI operations, a dose rate analysis has been performed using the dose rate versus distance results given in Appendix A7A.7. The occupational dose calculation considers all workers at the Prairie Island Nuclear Generating Plant to be in buildings (however no credit is taken for shielding of personnel by buildings) or in the plant yard. This population includes a normal work force and contractor personnel as well as the increased staffing required during outages.

Table A7.4-3 provides a summary of staffing levels assumed at various site locations along with the distance from the center of the ISFSI. The locations designated on Table A7.4-3 are shown on Figure A7.4-1. This information is considered to be a general estimate of station staffing and does not necessarily reflect actual staffing at any given time. Changes in staffing levels and locations can be expected to occur in the future without affecting the general estimates contained in this section.

Distance dependent dose rates are provided in Table A7A.7-2. The data is based on loading 48 TN-40HT casks over a 22-year period assuming 4 spent fuel casks are loaded every 2 years. The dose rates in Table A7.4-3 were conservatively (using linear interpolation) calculated using the dose rate vs. distance data corresponding to the "corner" detectors.

Table A7.4-4 summarizes the calculated total doses to full time and outage help at the various locations due to ISFSI operation. The collective onsite dose by location and the total onsite dose estimates are also shown on this table.

A7.5 OFFSITE COLLECTIVE DOSE ASSESSMENT

Figure 1.2-1 illustrates the Prairie Island Nuclear Generating Plant site boundary, which is also the boundary of the exclusion area as defined in 10CFR100.3. This exclusion area corresponds to the controlled area for the ISFSI as defined in 10CFR72.3.

In calculating the offsite collective dose, the entire permanent population within a 2 mile radius of the plant was conservatively taken to be at the location of the residence subject to the highest exposure, i.e. 0.45 miles NW of the ISFSI. In addition to the permanent population, there is a large transient population of persons employed at or visitors to the Treasure Island Hotel and Casino that is located within a 2 mile radius of the plant. For these calculations it is assumed that this entire transient population is located 0.8 miles from the ISFSI. The estimates of the population (both permanent and transient) within the 2 mile radius were taken from the Prairie Island Nuclear Generating Plant's evacuation time study (Reference 6). A description of the off-site locations considered in this evaluation, the relevant population data, distances and occupancy times are shown in Table A7.5-1.

The dose rate resulting from cask storage at the ISFSI as a function of distance is given in Table A7A.7-2. For a distance of 0.45 mile (724 meters) in the corner direction, the total dose rate is 2.20 E-3 rem/year. This is the annual exposure at the nearest resident location.

Table A7.5-2 shows the total dose rates from the ISFSI at each of the assumed off-site locations. In addition, Table A7.5-2 also contains the information summarized in Table A7.5-1. For conservatism, the dose rates calculated at a distance of 1004 m from the "north-south" face of the ISFSI are utilized to determine the off-site exposures at distances greater than 0.8 miles (1280 m).

Table A7.5-2 summarizes the calculated total doses to the off-site population within a 2-mile radius due to the ISFSI operation. The total collective off-site dose is calculated to be 3.60 person-rem.

A7.6 RADIATION PROTECTION PROGRAM

The information in Section 7.6 is independent of cask design.

A7.7 RADIOLOGICAL ENVIRONMENTAL MONITORING PROGRAM

The information in Section 7.7 is independent of cask design.

A7.8 REFERENCES

1. SCALE 4.4, "Modular Code System for Performing Standardized Computer Analyses for Licensing Evaluation for Workstations and Personal Computers," CCC-545, ORNL.

2. "MCNP/MCNPX – Monte Carlo N-Particle Transport Code System Including MCNP5 1.40 and MCNPX 2.5.0 and Data Libraries," CCC-730, Oak Ridge National Laboratory, RSICC Computer Code Collection, January 2006.

3. ORNL/TM-11018, "Standard- and Extended-Burnup PWR and BWR Reactor Models for the ORIGEN2 Computer Code," Oak Ridge National Laboratory, December 1989.

4. NUREG/CR-6801 (ORNL/TM-2001/273), March 2003, "Recommendations for Addressing Axial Burnup in PWR Burnup Credit Analysis."

5. Luksic, "Spent Fuel Assembly Hardware: Characterization and 10 CFR 61 Classification for Waste Disposal," PNL-6906, UC-85, June 1989.

6. Evacuation Time Estimate Study for the Prairie Island Nuclear Generating Plant Emergency Planning Zone, September 25, 2003

TABLE A7.2-1
PRAIRIE ISLAND FUEL ASSEMBLY DESIGN CHARACTERISTICS

Fuel Designations	Exxon Std (14x14)	Exxon Std High Burnup (14x14)	Exxon Toprod (14x14)	Westinghouse Standard (14x14)	Westinghouse OFA (including Vantage+) (14x14)
Max Length (in)	161.3	161.3	161.3	161.3	161.3
Max Width (in)	7.763	7.763	7.763	7.763	7.763
Fuel Density(1) (% Theoretical)	93.18	93.20	92.80	93.32	94.80
Rod Pitch (in)	0.556	0.556	0.556	0.556	0.556
No of Fueled Rods	179	179	179	179	179
Maximum Active Fuel Length (in)	144.0	144.0	144.0	144.0	144.0
Fuel Rod OD (in)	0.4240	0.4260	0.4170	0.4220	0.4000
Clad Thickness (in)	0.030	0.031	0.0295	0.0243	0.0243
Fuel Pellet OD (in)	0.3565	0.3565	0.3505	0.3659	0.3444
Clad Material	Zr-4	Zr-4	Zr-4	Zr-4	Zr-4/ZIRLO
Guide Tube OD (in)	0.541	0.541	0.541	0.539	0.528
Guide Tube Wall Thickness (Zr-4) (in)	0.017	0.017	0.017	0.017	0.019
Guide Tube #	16	16	16	16	16
Instrument Tube #	1	1	1	1	1
Instr. Tube OD (in)	0.424	0.424	0.424	0.422	0.4015
Instr. Tube Wall Thickness (Zr-4) (in)	0.025	0.025	0.025	0.0243	0.0258
Maximum MTU/assembly(2)	0.370	0.370	0.370	410	0.360
Free Gas Volume m^3 @STP	0.226	0.226	0.226	0.107	0.107
Fill Gas	He	He	He	He	He

Notes:

(1) The fuel density values are "as-built", i.e., they incorporate the effect of the pellet dish and chamfer, as well as the theoretical density of the pellet. These densities were calculated from reload data provided by the fuel manufacturer, as follows:

As-built UO_2 density = total amount UO_2 in reload/ total volume of fuel in reload

Where fuel volume = (# fuel pins) (π/4) (pellet OD)^2 (active fuel length)

(2) The maximum MTU/assembly is calculated based on the theoretical density. The calculated value is higher than the actual value.

TABLE A7.2-2
WESTINGHOUSE 14X14 STANDARD FUEL ASSEMBLY HARDWARE CHARACTERISTICS

Item	Material	Average Mass (kg/assembly)
Fuel Zone		
Cladding	Zircaloy	83.4
Spacers	Inconel	5.37
Guide/Instrument Tube*	Stainless Steel	7.74
Fuel-Gas Plenum Zone		
Cladding	Zircaloy	4.13
Springs	Stainless Steel	5.68
Spacer	Inconel	0.68
Guide/Instrument Tube*	Stainless Steel	0.38
Top End Fitting Zone		
Top Nozzle	Stainless Steel	6.30
Hold Down Springs	Inconel	0.51
Bottom End Fitting Zone		
Bottom Nozzle	Stainless Steel	7.89
Total		122

* Conservatively assumed as stainless steel

TABLE A7.2-3
MATERIAL COMPOSITIONS FOR FUEL ASSEMBLY HARDWARE MATERIALS

Element	Atomic Number	Material Composition, grams per kg of material		
		Zircaloy-4	Inconel-718	Stainless Steel 304
H	1	1.30E-02	-	-
Li	3	-	-	-
B	5	3.30E-04	-	-
C	6	1.20E-01	4.00E-01	8.00E-01
N	7	8.00E-02	1.30E+00	1.30E+00
O	8	9.50E-01	-	-
F	9	-	-	-
Na	11	-	-	-
Mg	12	-	-	-
Al	13	2.40E-02	5.99E+00	-
Si	14	-	2.00E+00	1.00E+01
P	15	-	-	4.50E-01
S	16	3.50E-02	7.00E-02	3.00E-01
Cl	17	-	-	-
Ca	20	-	-	-
Ti	22	2.00E-02	7.99E+00	-
V	23	2.00E-02	-	-
Cr	24	1.25E+00	1.90E+02	1.90E+02
Mn	25	2.00E-02	2.00E+00	2.00E+01
Fe	26	2.25E+00	1.80E+02	6.88E+02
Co	27	1.00E-02	4.69E+00	8.00E-01
Ni	28	2.00E-02	5.20E+02	8.92E+01
Cu	29	2.00E-02	9.99E-01	-
Zn	30	-	-	-
Zr	40	9.79E+02	-	-
Nb	41	-	5.55E+01	-
Mo	42	-	3.00E+01	-
Ag	47	-	-	-
Cd	48	2.50E-04	-	-
In	49	-	-	-
Sn	50	1.60E+01	-	-
Gd	64	-	-	-
Hf	72	7.80E-02	-	-
W	74	2.00E-02	-	-
Pb	82	-	-	-
U	92	2.00E-04	-	-

TABLE A7.2-4
MATERIAL COMPOSITIONS FOR THE WESTINGHOUSE STANDARD 14X14 FUEL ASSEMBLY

Material Compositions for the Westinghouse Standard 14x14 Fuel Assembly

Fuel Zone	Height (cm)	Zircaloy (Kg)	UO_2 (Kg)	Inconel - 718 (Kg)	SS-304 (Kg)	Total (Kg)	Volume (cm^3)
Bottom	7.82				7.893	7.893	3.042E+03
Core	365.8	83.36	465.1	5.370	7.736	561.566	1.422E+05
Plenum	18.14	4.13		0.680	6.067	10.88	7.053E+03
Top	8.89			0.508	6.300	6.808	3.456E+03
Total		87.49	465.1	6.558	27.996	587.144	

Note: The PWR fuel assembly is modeled as a homogenized cuboid with a cross section area of 388.80 cm^2 (19.718 cm by 19.718 cm) or about 7.763" by 7.763". The assembly is conservatively assumed to contain 410 Kg Uranium.

TABLE A7.2-5
FUEL INSERTS - MATERIALS AND MASSES

Component	Region	Material	Mass (kg)
TPD	Top Fitting		
	Baseplate, yoke, hold down bar, etc.	Type 304 SS	2.5
	spring	Inconel 718	0.36
	Plenum		
	Thimble plugs	Type 304 SS	2.2
BPRA	Top Fitting		
	Baseplate, yoke, hold down bar, etc	Type 304 SS	2.5
	spring	Inconel 718	0.36
	Plenum		
	Cladding & liner	Type 304 SS	0.42
	Fuel Zone		
	Cladding & liner	Type 304 SS	7.96

TABLE A7.2-6
RADIOACTIVE INVENTORY FOR 14X14 DESIGN BASIS FUEL ASSEMBLY

Classification	Nuclide	14x14 W std (Ci/assembly)
gas	H3[1]	1.78E+02
fine	Pu238	3.02E+03
fine	Pu239	1.35E+02
fine	Pu240	2.67E+02
fine	Pu241	3.19E+04
fine	Am241	1.50E+03
fine	Am243	4.17E+01
fine	Cm244	5.28E+03
gas	Kr 85	1.78E+03
volatile	Sr 90	3.11E+04
fine	Y 90	3.11E+04
gas	I129	2.40E-02
volatile	Cs134	4.01E+02
volatile	Cs137	5.27E+04
fine	Ba137m	4.97E+04
fine	Pm147	6.53E+02
fine	Eu154	1.33E+03
fine	Np239	4.17E+01
	Total	**2.11E+05**
	SAS2H Results for all Isotopes[2]	
	Light Elements	1.44E+03
	Actinides	4.22E+04
	Fission Products	1.69E+05
	Total	**2.13E+05**

Notes:

1) The total of H3 from Light Elements and Fission Products.
2) A comparison of the total radioactive inventory indicates that the activity of the selected isotopes represents greater than 99.1% of the total.

TABLE A7.2-7
AXIAL SOURCE TERM PEAKING FACTOR

Fractional Core Height			Gamma Profile	Neutron Profile
0	to	0.0556	0.573	0.108
0.0556	to	0.111	0.917	0.707
0.111	to	0.167	1.066	1.291
0.167	to	0.222	1.106	1496
0.222	to	0.278	1.114	1.540
0.278	to	0.333	1.111	1.524
0.333	to	0.389	1.106	1.496
0.389	to	0.445	1.101	1.469
0.445	to	0.500	1.097	1.448
0.500	to	0.556	1.093	1.427
0.556	to	0.611	1.089	1.406
0.611	to	0.667	1.086	1.391
0.667	to	0.722	1.081	1.366
0.722	to	0.778	1.073	1.326
0.778	to	0.833	1.051	1.220
0.833	to	0.889	0.993	0.972
0.889	to	0.944	0.832	0.479
0.944	to	1.000	0.512	0.069
		Average:	1.00	1.15

TABLE A7.2-8
SOURCE DISTRIBUTION FOR 14X14 FUEL ASSEMBLY

			Source[1] (particles/sec/assembly)			
E_{min}, MeV	to	E_{max}, MeV	Bottom Nozzle	In-core	Plenum	Top Nozzle
0.00E+00	to	5.00E-02	4.6970E+10	1.1471E+15	6.4166E+10	2.8144E+10
5.00E-02	to	1.00E-01	5.8263E+09	2.2692E+14	7.4846E+09	3.4247E+09
1.00E-01	to	2.00E-01	1.4050E+09	1.5457E+14	2.0286E+09	8.2647E+08
2.00E-01	to	3.00E-01	6.9758E+07	4.6484E+13	1.0335E+08	4.1160E+07
3.00E-01	to	4.00E-01	9.1527E+07	3.0384E+13	1.7060E+08	5.3770E+07
4.00E-01	to	6.00E-01	5.7847E+06	3.8369E+13	1.1945E+09	3.3967E+06
6.00E-01	to	8.00E-01	2.0089E+06	1.6010E+15	1.5982E+09	3.6813E+08
8.00E-01	to	1.00E+00	7.9012E+07	2.4369E+13	1.0456E+09	3.9964E+08
1.00E+00	to	1.33E+00	1.7003E+12	7.4979E+13[2]	3.0819E+12[2]	1.6114+12[2]
1.33E+00	to	1.66E+00	4.8016E+11	1.5249E+13[2]	8.7003E+11[2]	4.5485+11[2]
1.66E+00	to	2.00E+00	1.6758E-06	7.8481E+10	2.9812E+01	2.4793E-03
2.00E+00	to	2.50E+00	1.1395E+07	4.4802E+09	1.4591E+07	6.6906E+06
2.50E+00	to	3.00E+00	1.7669E+04	4.4758E+08	2.2624E+04	1.0374E+04
3.00E+00	to	4.00E+00	1.5658E-14	7.9748E+07	2.7747E-11	1.0249E-11
4.00E+00	to	5.00E+00	0.00	2.6150E+07	0.0	0.0
5.00E+00	to	6.50E+00	0.00	1.0495E+07	0.0	0.0
6.50E+00	to	8.00E+00	0.00	2.0588E+06	0.0	0.0
8.00E+00	to	1.00E+01	0.00	4.3714E+05	0.0	0.0
Total Gamma:			2.2349E+12	3.3595E+15	4.0297E+12	2.0095E+12
Total Neutrons[3] (n/sec/FA)			7.59e+8			

1. The design basis gamma source term correspond to the Westinghouse 14x14 Standard fuel assembly with 3.40 wt.% U-235 enrichment, 60,000 MWD/MTU burnup, 18 year cooling time with TPD/BPRA insert source term.
2. Total gamma source from the fuel assembly and the BPRA/ TPD source shown in Table A7.2-9.
3. The neutron source spectrum is modeled as Cm-244 using the built-in MCNP distribution.

TABLE A7.2-9
GAMMA SOURCE TERMS FOR FUEL INSERTS

Gamma Source from 125 GWD/MTU, 16 Yr Cooled TPD (gammas/sec/assembly)						
In-Core		Plenum		Top End Fitting		Total
1 - 1.33 MeV	1.33 - 1.66 MeV	1 - 1.33 MeV	1.33 - 1.66 MeV	1 - 1.33 MeV	1.33 - 1.66 MeV	
-	-	9.05E+11	2.55E+11	6.13E+11	1.73E+11	1.95E+12

Gamma Source from 30 GWD/MTU, 18 Yr Cooled BPRA (gammas/sec/assembly)						
In-Core		Plenum		Top End Fitting		Total
1 - 1.33 MeV	1.33 - 1.66 MeV	1 - 1.33 MeV	1.33 - 1.66 MeV	1 - 1.33 MeV	1.33 - 1.66 MeV	
3.10E+12	8.73E+11	-	-	-	-	3.97E+12

TABLE A7.4-1
OCCUPATIONAL EXPOSURES FOR CASK LOADING, TRANSPORT, AND EMPLACEMENT

Task Description	Dose Rate (mrem/hr)	Time Required (hrs)	No. of Persons (man)	Dose (man-rem)
Placement in Pool	2	2	3	0.012
Loading Process	2	5	5	0.050
Removal from Pool	32	5	5	0.800
Transfer to Decontamination Area	32	1	3	0.096
Processing of Cask	43	6.5	2	0.559
Helium Leak Test	43	2	2	0.172
Decontamination	66	2	3	0.396
Install Neutron Shield, Pressurize, Test	43	3	2	0.258
Preparation for Transport	30	1	3	0.090
Transfer of Cask to ISFSI	18	1	3	0.054
Final Cask Emplacement	63	2	5	0.630
TOTAL	**N/A**	**30.5**	**N/A**	**3.117**

TABLE A7.4-2
DESIGN BASIS ISFSI MAINTENANCE OPERATIONS ANNUAL EXPOSURES

Task Description	Dose Rate (mrem/hr)	Time Required (hrs)	No. of Persons (man)	Dose (man-rem)
Visual Surveillance of Casks	63	1	2	0.126
Instrumentation Operability Tests	4	1	2	0.008
Instrumentation Calibration	4	2	2	0.016
Instrumentation Repairs	300	1	2	0.600
Surface Defect Repair	300	1	2	0.600
Major Maintenance	32	32.5	3	3.120
TOTAL	**N/A**	**38.5**	**N/A**	**4.470**

TABLE A7.4-3
STATION PERSONAL LOCATION AND DOSE RATES

Location #	Location	Distance (Feet From Center ISFSI)	Full Time	Outage	Dose Rate, mrem/hr
1	34 OCA Gatehouse (D-2)	978	2	0	2.36e-2
2	22 Receiving Warehouse (D-5) 55 13 P1ex Project Office (D-5) A 4 P1ex Project Office (D-5)	953	30	0	2.55e-2
3	24 NPD Building (E-6) 33 NPD Annex Building (E-5) Quality Assurance Modular Office (E-5)	1016	60	1	2.08e-2
4	42 Fabrication Shop (C-5) 25 Steam Generator Mock up Building (C-5) 48 Fabrication Shop (D-5)	1381	2	45	5.19e-3
5	30 Warehouse (C-5) 31 Multiuse Warehouse (C-5) 21 Warehouse -8 (C-6)	1650	0	2	2.07e-3
6	12 Substation, SBO Structures (B-6)	2236	0	2	3.60e-4
7	23 New Administration Building (D-6) 6 Security Building (D-6)	1496	287	25	2.93e-3
8	4 Turbine Building (D-7) 28 Warehouse -2 (E-7) 3 Auxiliary Building (E-7) 13 New Service Building (D-8) 11 D5/D6 DG Building (D-7) 79 Security DG Building (D-7)	1650	180	192	2.07e-3
9	Outage Trailers (E-7)	1322	5	40	6.39e-3
10	60 Fabrication Shop (E-7) 29 Main Plant Warehouse (E-7) 66 Maintenance Storage Building (E-7)	1557	23	45	2.59e-3
11	20 Environmental Lab (B-9)	2534	2	0	1.58e-4
12	Training Center	905	49	0	2.91e-2
13	38 Old Administration Building (D-7) 71 Administration Building Addition (D-7)	1745	68	0	1.53e-3
14	13 New Service Building (D-8)	1905	9	0	9.36e-4

TABLE A7.4-4
STATION PERSONAL COLLECTIVE DOSE

Location #	Location	Distance (Feet From Center ISFSI)	Full Time *	Outage **	Total Exposure, person-rem
1	34 OCA Gatehouse (D-2)	978	0.12	0	0.12
2	22 Receiving Warehouse (D-5) 55 13 P1ex Project Office (D-5) A 4 P1ex Project Office (D-5)	953	1.91	0	1.91
3	24 NPD Building (E-6) 33 NPD Annex Building (E-5) Quality Assurance Modular Office (E-5)	1016	3.12	1.12e-2	3.13
4	42 Fabrication Shop (C-5) 25 Steam Generator Mock up Building (C-5) 48 Fabrication Shop (D-5)	1381	0.03	0.13	0.15
5	30 Warehouse (C-5) 31 Multiuse Warehouse (C-5) 21 Warehouse -8 (C-6)	1650	0	0.00	2.23e-3
6	12 Substation, SBO Structures (B-6)	2236	0	3.89e-4	3.89e-4
7	23 New Administration Building (D-6) 6 Security Building (D-6)	1496	2.10	0.04	2.14
8	4 Turbine Building (D-7) 28 Warehouse -2 (E-7) 3 Auxiliary Building (E-7) 13 New Service Building (D-8) 11 D5/D6 DG Building (D-7) 79 Security DG Building (D-7)	1650	0.93	0.21	1.14
9	Outage Trailers (E-7)	1322	0.08	0.14	0.22
10	60 Fabrication Shop (E-7) 29 Main Plant Warehouse (E-7) 66 Maintenance Storage Building (E-7)	1557	0.15	0.06	0.21
11	20 Environmental Lab (B-9)	2534	0.00	0	7.91e-4
12	Training Center	905	3.57	0	3.57
13	38 Old Administration Building (D-7) 71 Administration Building Addition (D-7)	1745	0.26	0	0.26
14	13 New Service Building (D-8)	1905	0.02	0	0.02
Total			12.28	0.59	12.88

* For full time employees, assume 2500 hours/year.
** For outage employees, assume 540 hours/year.

TABLE A7.5-1
OFFISTE POPULATION: LOCATION, DISTANCE, OCCUPANCY TIME

Permanent population within 2 mile radius

Description	Population	Occupancy times	Distance
2 mile -radius	452	24hr/day 365day/yr	>0.45 mile

Transient Employee Population

Description	Population	Occupancy times	Distance
2 mile - PI community center, government center, and clinic	65	8hr/ day, 5 day/wk, 50 wk/yr	0.8 mile
2 mile - Employees at Treasure Island Casino	650	At any give time; i.e. 24hr/day 365 day/yr	0.8 mile

Transient Hotels, Motels, and malls Population

Description	Population	Occupancy times	Distance
2 mile - Treasure Island Casino (day)	7,000	12hr/ day, 5 day/wk, 52 wk/yr	0.8 mile
2 mile - Treasure Island Casino (night)	9,000	12hr/ day, 5 day/wk, 52 wk/yr	0.8 mile
2 mile - Treasure Island Casino (Week end)	15,850	48 hr/weekend, 52 weekend/yr	0.8 mile

Transient recreational Population

Description	Population	Occupancy times	Distance
2 mile - Treasure Island Casino (special events)	21,202	3 hr/show, 3 show/event, 24 events per year	0.8 mile

Transient hospitals and clinics population

Description	Population	Occupancy times	Distance
2 mile - PI community center, government center, and clinic	140	8hr/ day, 5 day/wk, 52wk/yr	0.8 mile

TABLE A7.5-2
OFFISTE POPULATION: DOSE RATES AND COLLECTIVE DOSE

Offsite Population	Description	Distance	Occupancy times	Population	Dose Rate, mrem/hr	Collective Exposure, person-rem
Permanent* population within 2 mile radius	2 mile radius	>0.45 miles	8760	452	2.42e-4	0.96
Transient Employee Population	2 mile -PI community center, government center, and clinic	0.8 mile	2000	65	2.64e-5	3.43e-3
	2 mile -Employees at Treasure Island Casino	0.8 mile	8760	650	2.64e-5	0.15
Transient hotels, motels, and malls population	2 mile -Treasure Island Casino (day)	0.8 mile	3120	7000	2.64e-5	0.58
	2 mile -Treasure Island Casino (night)	0.8 mile	3120	9,000	2.64e-5	0.74
	2 mile -Treasure Island Casino (Weekend)	0.8 mile	2496	15,850	2.64e-5	1.04
Transient recreational population	2 mile -Treasure Island Casino (special events)	0.8 mile	216	21,202	2.64e-5	0.12
Transient hospitals and clinics population	2 mile -PI community center, government center, and clinic	0.8 mile	2080	140	2.64e-5	7.69e-3
	Total Collective Within 2 Mile					**3.60**

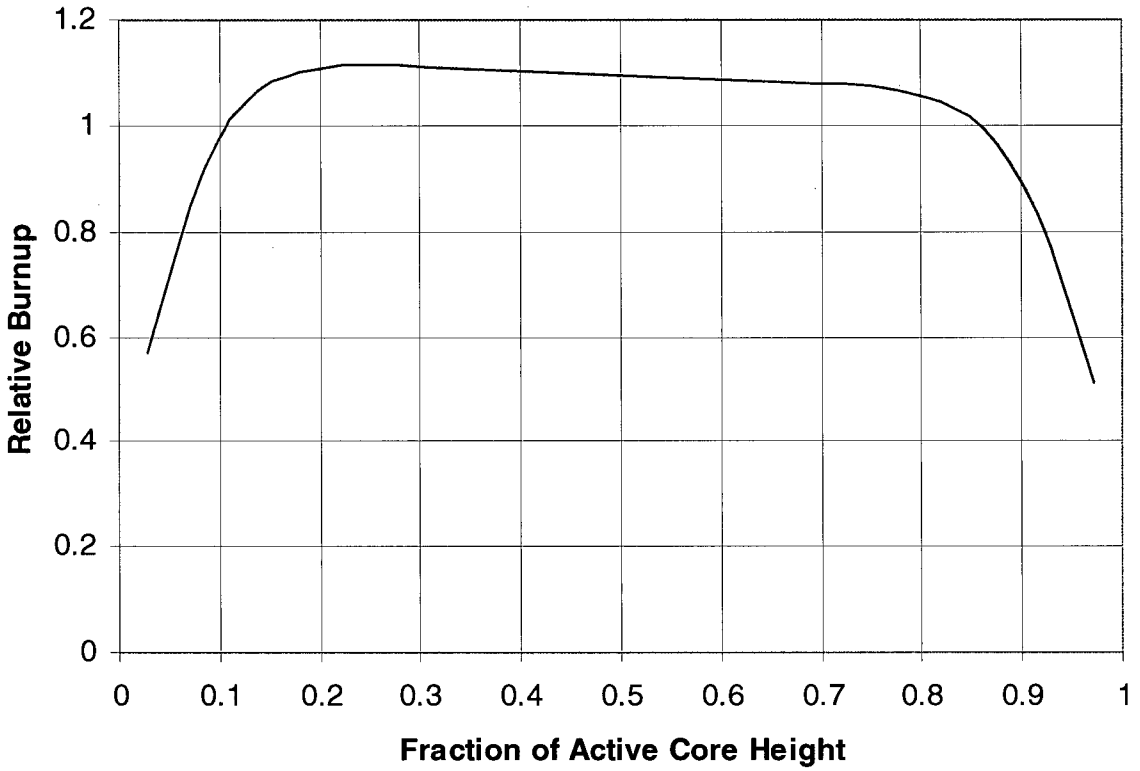

FIGURE A7.2-1
AXIAL BURNUP PROFILE FOR DESIGN BASIS FUEL

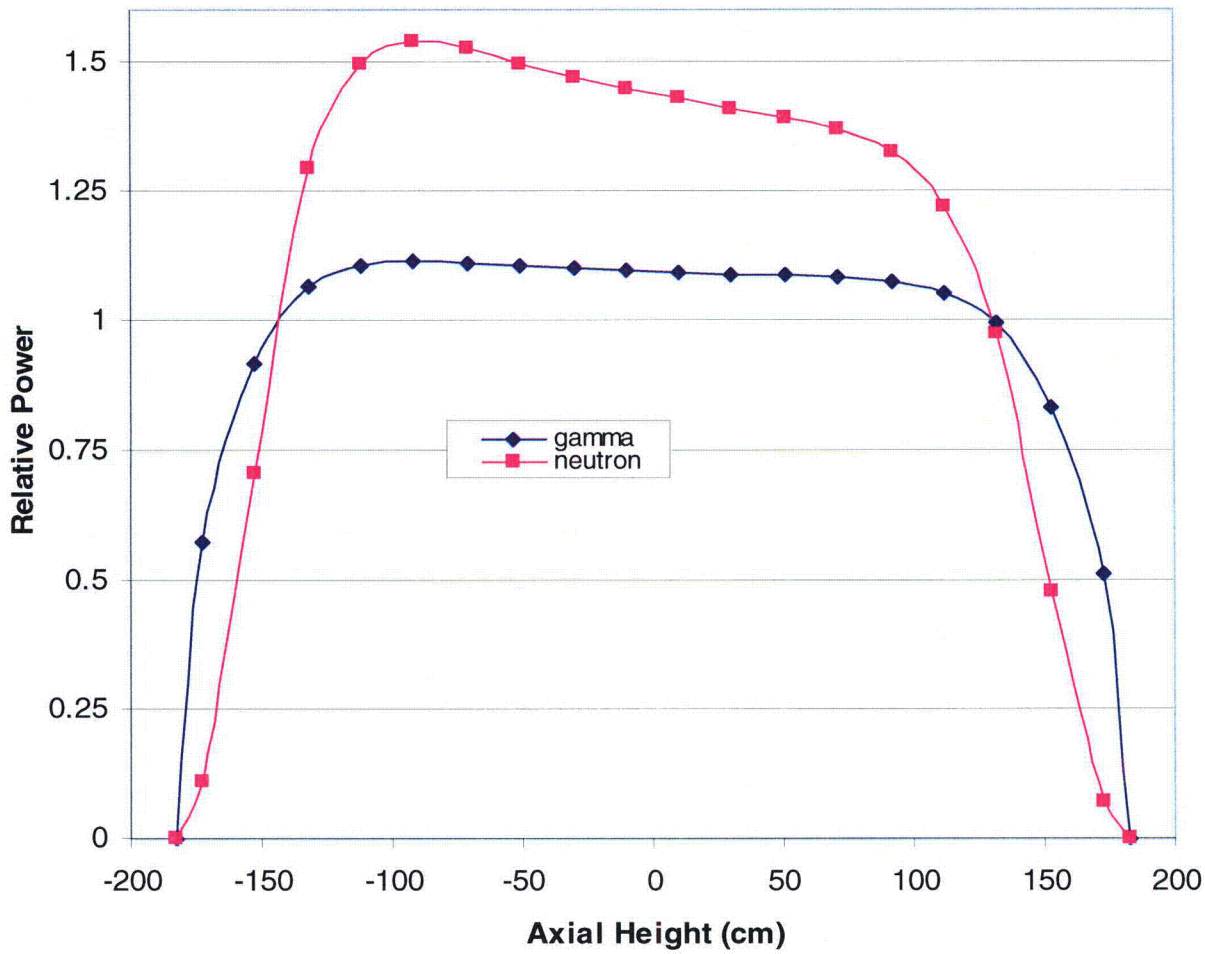

FIGURE A7.2-2
AXIAL NEUTRON AND GAMMA POWER PROFILES

WITHHELD PURSUANT TO 10 CFR 2.390

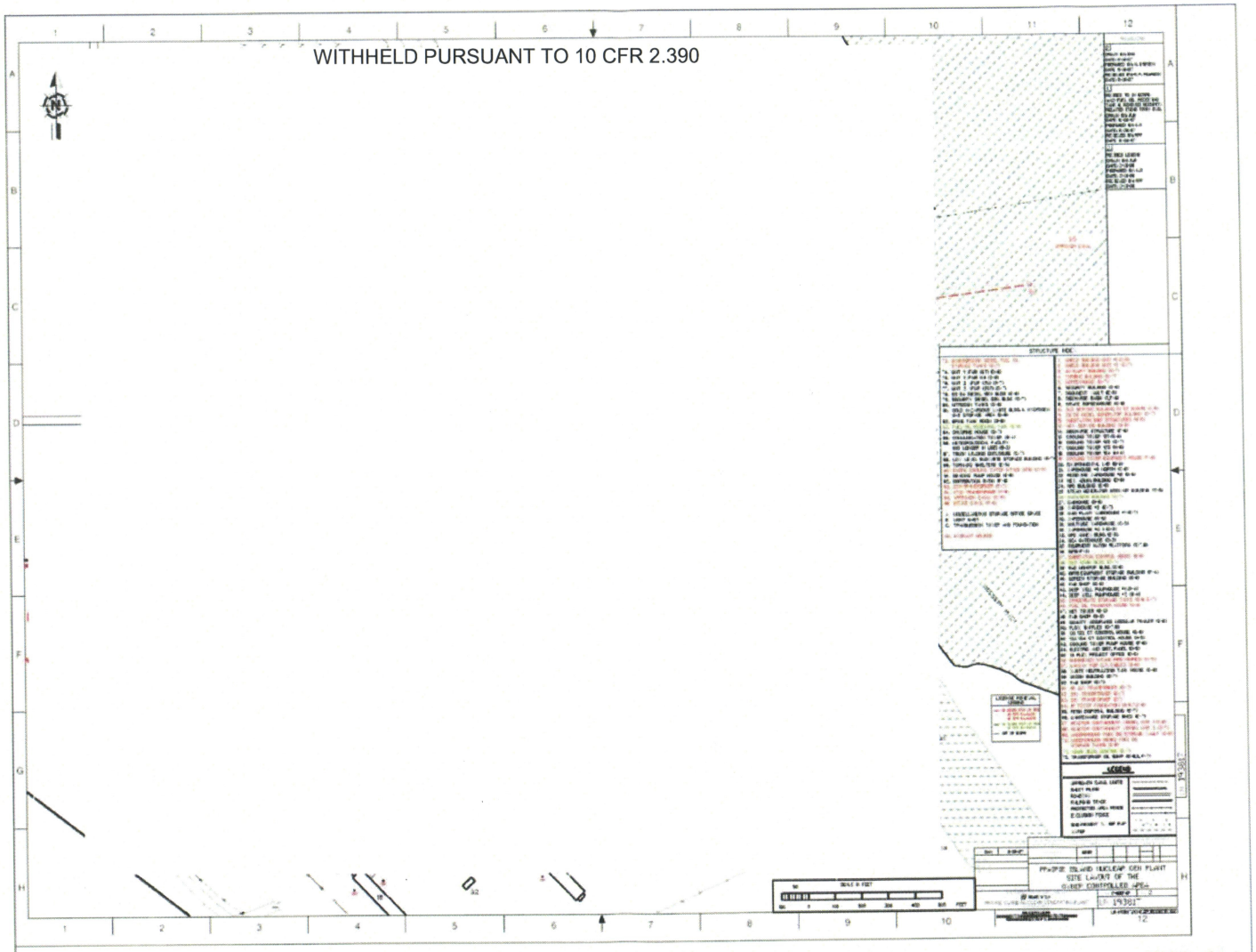

FIGURE A7.4-A

Appendix A7A

TN-40HT CASK DOSE ANALYSIS

A7A.1 SHIELDING DESIGN FEATURES

Shielding for the TN-40HT cask is provided mainly by the cask body. For the neutron shielding, a borated polyester resin compound surrounds the cask body and a polypropylene disk covers the lid. Additional shielding is provided by the steel shell surrounding the resin layer and by the steel and aluminum structure of the fuel basket.

Geometric attenuation, enhanced by air and ground attenuation, provides additional dose reduction for distant locations at the restricted area and site boundaries. Figure A7A.1-1 shows the configuration of shielding in the cask. Table A7A.1-1 lists the compositions of the shielding materials.

A7A.2 DISCUSSION AND SUMMARY OF RESULTS

The shielding evaluation presented in this section is performed utilizing as a design basis the source terms from the14x14 Westinghouse standard fuel assembly with fuel inserts. This fuel assembly is bounding because it contains the highest mass of fuel among the candidate fuel assemblies.

All shielding calculations are performed using the computer code MCNP (Reference 1) which uses a 3-dimensional Monte Carlo method. MCNP is a general-purpose Monte Carlo N-Particle code that can be used for neutron, photon, electron, or coupled neutron/photon/electron transport. The code treats an arbitrary three-dimensional configuration of materials in geometric cells bounded by first- and second-degree surfaces and some special fourth-degree surfaces. Point-wise (continuous energy) cross-section data are used. The MCNP code is selected because of its ability to handle thick, multi-layered shields as in the TN-40HT cask body using 3-D geometry.

For neutrons, all reactions given in a particular cross-section evaluation are accounted for in the cross section set. For photons, the code takes account of incoherent and coherent scattering, the possibility of fluorescent emission after photoelectric absorption, absorption in pair production with local emission of annihilation radiation, and bremsstrahlung. Important standard features that make MCNP very versatile and easy to use include a powerful general source; an extensive collection of cross-section data; and an extensive collection of variance reduction techniques that can be employed to track particles through very complex deep penetration problems. Mesh tallies capabilities were utilized in calculating dose rates distributed over and around the surface of the TN-40HT cask.

Normal and off-normal conditions are modeled with the TN-40HT cask intact. Average dose rates on the side, top and bottom of the TN-40HT cask are calculated. Maximum dose rates are also calculated above and below the radial neutron shield.

Accident conditions assume radially the neutron shield and steel outer shell are removed and axially the polypropylene disk and protective cover are removed. This evaluation bounds the accident conditions in Section A8.

The expected dose rates (for normal, off-normal, and accident conditions) from the TN-40HT cask are provided in Table A7A.2-1. The dose point locations are illustrated in Figure A7A.2-1.

The total (direct + skyshine) dose rates as a function of distance from the cask are presented in Table A7A.2-2.

The total ISFSI dose rate (from 48 casks all containing design basis fuel at the time of initial loading) as a function of distance from each location (N/S side, E/W side, or corner) is summarized in Table A7A.7-2.

A7A.3 METHODOLGY

The methodology used in the shielding analysis of the TN-40HT cask is the 3-D MCNP code. MCNP allows for explicit 3-D modeling of any shielding configuration and reduces the number of approximations needed. The methodology used herein is summarized below.

1. Sources are developed for all fuel regions using the source term data from Section A7.2. Source regions include the active fuel region, bottom end fitting (including all materials below the active fuel region), plenum, and top end fitting (including all materials above the active fuel region).
2. Suitable shielding material densities are calculated for all regions modeled.
3. The 3-D Monte Carlo transport code MCNP is used to calculate dose rates on and around the TN-40HT cask.
4. For the cask, importance biasing is utilized for variance reduction for both the near and far field dose rate calculation. F4 type tallies are utilized for determining near field dose rates and far field dose rates.

A7A.4 MODEL SPECIFICATION

The neutron and gamma dose rates on the surface of the TN-40HT cask (Side, Top and Bottom surfaces) and at 1m and 2m from the side surface of the cask are evaluated with the 3-D Monte Carlo transport code MCNP (Reference 1). The flux-to-dose conversion factors specified by ANSI/ANS 6.1.1-1977 (Reference 2) are used and provided in Table A7A.4-1.

The cross-section data used is the continuous energy ENDF/B-VI provided with the MCNP code. The cross-section data allows coupled neutron/gamma-ray dose rate evaluation to be made to account for secondary gamma radiation (n,γ), if desired. All of the near field dose rate calculations account for the dose rate due to secondary gamma radiation. For the far field (long distance) dose rate calculation, the dose rate contribution from the secondary gamma radiation is ignored because it is insignificant.

Figure A7A.4-1 is a plot of the TN-40HT cask MCNP model and shows the axial cross section of the cask. This shielding configuration is utilized to determine the radial (side surface) and axial (top and bottom surface) dose rates around the TN-40HT cask for normal, off-normal and accident conditions. This configuration is also utilized to determine the dose rates at long distances from the cask.

A7A.4.1 MCNP MODEL FOR NORMAL AND OFF-NORMAL CONDITIONS

A single shielding configuration is utilized for the TN-40HT design for both normal and off-normal conditions of storage. The cask bottom dose rates are determined as a consequence of off-normal conditions since these become important only during loading and transfer. During normal conditions of storage the cask is upright and is firmly seated on the concrete pad. A three-dimensional MCNP model which includes a discrete fuel assembly model of the TN-40HT cask was developed for this purpose. In the MCNP model, the TN-40HT cask axis is modeled along the Z-direction. The X and Y axes in the MCNP model represent the cask in the radial direction. The cask is assumed to sit on a concrete pad (Z-direction).

The MCNP model for these shielding configurations is based on a discrete basket with the homogenized fuel assemblies (with an active height of 144 inches) positioned within fuel compartments. The MCNP model developed in this calculation is essentially based on the design details from the TN-40HT cask drawings, shown in Section A1.5, except for some conservative representations. The cells 2051 through 2133 represent the discrete basket and fuel assembly zones.

Figure A7A.4-1 is a Y-Z plot of the MCNP model of the TN-40HT cask (axial section view). All the major details of the cask model are shown in this figure. The fuel basket extends to 160" in the axial direction from the bottom of the bottom fitting (-190.70 cm) to about 2" above the top of the fuel assembly (209.91 cm). The active fuel zone is 144" long with the center at 0 (± 182.88 cm). A simple analog model is used for calculating the neutron dose. For the primary gamma dose rates, a multiple cell sub-layer model is used. The cask trunnions and the resin cutouts (flats) are modeled explicitly. The neutron resin boxes/radial neutron shield, top neutron shield and protective cover are also modeled explicitly.

The basket is modeled discretely using the advanced geometry features of MCNP. The fuel is modeled as a cuboid based on a 7.763" square. The fuel compartment inside dimension is 8.05" and is modeled with stainless steel with a thickness of 0.187" surrounded by a 0.437"-thick basket aluminum plates. The Boral© (or any other poison material) plates were modeled as pure aluminum and the stainless steel strips (tie plates) were not modeled. The stainless steel and aluminum peripheral rails were modeled explicitly. A small air gap of 0.15" (0.38 cm) was assumed between the basket and the cask shell. Figure A7A.4-2 is a radial cross section (X-Y plot) of the MCNP gamma model at Z=181 cm that shows the upper trunnions. Figure A7A.4-3 is also a radial cross section plot which shows one quarter of the basket and the rails.

Above the basket, the stainless steel fuel compartments and aluminum plates surrounding the fuel assembly are replaced by air (void).

The spatial distribution of the source is assumed to be uniform within each non-fuel hardware zone and within each axial burnup segment in the active fuel. Isotropic angular distribution is assumed for all sources.

Two MCNP models are developed for determining the normal and off-normal dose rates. The gamma model containing a detailed segmentation of the thicker cask steel body is utilized to calculate the primary gamma dose rates. The neutron model is utilized to calculate the neutron and secondary gamma dose rates.

Tallies are based on the F4 type mesh tally feature of MCNP to provide the average flux in the defined volume. The radial tallies are located just off the cask surface, 1 m from cask outer surface and 2 m from cask outer surface. Similarly, axial tallies are located at the cask top (protective cover) and bottom which determine the average flux at the top and bottom surfaces, and 1m and 2m from the top surface.

A7A.4.2 MCNP MODEL FOR ACCIDENT CONDITIONS

The MCNP design basis model for accident conditions is almost identical to that of the normal (and off-normal) conditions except that all neutron shielding and the outer steel shell materials are replaced with void. This scenario is based on a cask drop accident that results in the complete removal of the neutron shielding materials including the polypropylene disk and the protective cover at the top. This is implemented in MCNP by replacing the appropriate materials in the MCNP models with void.

A7A.4.3 MCNP MODEL FOR LONG DISTANCES FROM THE CASK

The near field dose rate MCNP model described above is modified to determine the long distance dose rates. The near-field MCNP model is extended further to include additional volumetric detectors beyond the immediate vicinity of the cask and splitting cells are used to transport particles far from the cask (about 2000 m from the cask surface) to obtain dose rates at long distances. A schematic of the far field model is shown in Figure A7A.4-4. This modeling technique splits particles upwards and outwards to better simulate skyshine. At farther regions of the model, cones are used to split particles downward to the detector location.

The MCNP calculated dose rates at far distances consist of contributions from direct, air scatter (skyshine) and limited ground scatter (only in the immediate vicinity of the cask). Modifications (cell flagging) are also made to separate the direct and skyshine component. Any radiation that crosses an elevation of 20 feet (~1.5 meter above cask) is considered to be skyshine. This is a valid approximation for two main reasons. One, this height corresponds to the earth berm. Second, beyond this elevation it is highly probable the radiation will have to scatter back in order to reach far detectors.

Soil is modeled as the ground surface under and extending away from the cask. It is expected that the maximum contribution to the ground scatter component occurs at the immediate vicinity of the cask. A layer of soil more than 4 feet thick is adequate to account for "ground shine." Actual soil depth modeled in MCNP models is about 6 feet. Axial splitting is not modeled in the soil.

The doses due to capture gamma sources are not calculated since they are insignificant at large distances in comparison to primary gamma and neutron sources.

The dose is calculated as F4 tallies (that calculate the volumetric dose rates) in an annular cylindrical detector, 20 cm thick and 3 feet high at about 6 feet off the ground. The dose rates are calculated at distances ranging from 10m to 2000m from the edge of the cask.

A7A.4.3 SHIELD REGIONAL DENSITIES

Table A7.2-4 shows the fuel assembly material composition for the four fuel assembly regions. Based on these material compositions and material densities, atom fractions for the fuel assembly regions are determined and provided in Table A7A.4-2. The mass of materials in each fuel assembly region is homogenized over the volume of the region (area = 60.26 in^2, based on a 7.763" x 7.763" cross-section). Table A7A.4-3 provide the shield regional densities for the TN-40HT cask. The actual fuel layout in the TN-40HT cask is an array of fuel assemblies inside stainless steel compartments surrounded by sheets of aluminum material.

The radial resin and aluminum boxes are discreetly modeled based on the material composition of the polyester resin and the aluminum.

A7A.5 NEAR FIELD DOSE RATE CALCULATIONS

Two basic three-dimensional MCNP models are employed for shielding analyses of the TN-40HT cask, one model for neutrons and the other for gammas. An additional two models are utilized for the accident configuration. The results of the near field dose rate calculations for normal and off-normal conditions are shown in Table A7A.5-1 and Table A7A.5-2. These results are also shown in Figure A7A.5-1 through Figure A7A.5-5. A sample MCNP input file listing is provided in Section A7B. Additional cask surface dose rate results above and below the neutron shield for normal and off-normal conditions are shown in Table A7A.5-3.

Figure A7A.2-1 shows the locations around the cask where the dose rates are calculated. As expected due to the reduced shielding, there is an increase in the dose rates at the surface above and below the neutron shield as shown in Table A7A.5-3 in comparison to the cask surface side dose rates shown in Table A7A.5-1.

For the TN-40HT cask an accident case is performed assuming the neutron shield and steel neutron shield jacket (outer skin) of each have been torn off and the top neutron shield and protective cover are gone. The results of the near field dose rate calculations for accident conditions are shown in Table A7A.5-4. These results are also shown in Figure A7A.5-6 through Figure A7A.5-9.

A7A.6 FAR FIELD DOSE RATE CALCULATIONS

MCNP models are developed to determine the far field dose rates as discussed above. The results of the far field dose rate calculations are shown in Table A7A.2-2 and Table A7A.6-1. These results are also shown in Figure A7A.6-1. The MCNP input file listing for neutron is shown in Section A7B.

A7A.7 OFFSITE DOSE RATE CALCULATIONS

This Section evaluates off-site dose rates assuming the ISFSI consists of two (2) 2x12 array of TN-40HT casks, loaded in sets of four casks every two years, each loaded with design-basis fuel at the time of initial loading (i.e. total of 48 casks and credit for decay while the casks are on the ISFSI pads). This conservatively bounds the currently allowed storage of 48 casks and bounds operation with a mixture of TN-40 and TN-40HT casks. The ISFSI layout used in this evaluation is shown in Figure A7A.7-1.

This evaluation determines the neutron and gamma-ray off-site dose rates including skyshine in the vicinity of the ISFSI. It provides results for distances ranging from 10 to 1,000 meters from the front, side and corner of the arrays. A co-ordinate transformation of these results is performed so that they may be reported as a distance from a common point, i.e., the center of the ISFSI.

The Monte Carlo computer code MCNP (Reference 1) calculates the dose rates at the specified locations around the array of casks. An "MCNP Array" method is utilized to evaluate the dose rate as a function of distance from the ISFSI.

A7A.7.1 MCNP ARRAY METHOD – METHODOLOGY, MODEL AND ASSUMPTIONS

The ISFSI layout as illustrated in Figure A7A.7-1 is explicitly modeled in MCNP using advanced MCNP geometry. The gamma and neutron dose rates are determined as a function of distance from the ISFSI. All the doses are determined using F5 "detector" tallies.

The ISFSI array MCNP model consists of a two 2x12 arrays of TN40-HT casks. The cask array is modeled using advanced MCNP geometry to represent the ISFSI as shown in Figure A7A.7-1. Source specification is consistent with the loading "scheme" where four casks are loaded every two years. Due to the symmetry of the layout of the cask array and in the loading schedule, sources are only specified for the north-west row of casks (even-numbered casks 2 through 24 from Figure A7A.7-1). Even though, sources are not specified in the remaining 36 casks, the shielding configurations are identical and ensure that the resulting dose rate distribution around the ISFSI is symmetric. Tallies are constructed from small, spherical, F5 detectors providing for variance reduction capabilities. These detectors are positioned all around the ISFSI (all sides and corner locations) to determine the dose rates as a result of the source symmetry. These detector locations are shown in Table A7A.7-1.

Credit is taken for the ISFSI berm. The berm is modeled as an isosceles trapezoid with 14.02 and 2.44 meters bottom and top segments, respectively. The berm is assumed 6.25 meters height and made from soil. Based on the coordinate system depicted on Figure A7A.7-1 (the berm is not shown on the Figure), the planes of symmetry along the west and east sides of the berm are X=-114.30 and X=121.61 meters, respectively. Similarly, planes of symmetry along the north and south sides of the berm are at Y=-58.22 and Y=58.22 meters, respectively. -

Radiological sources from Bottom Nozzle, In-core, Plenum and Top Nozzle axial regions of the TN40 HT design basis fuel assembly are calculated for cooling times ranging from 18 to 40 years, with 2 years increments. The SAS2H\ORIGEN-S models utilized in the design basis fuel source term calculations are also employed herein.

In order to simplify the source term specification in the MCNP models, the total gamma and neutron radiation source terms strength can be approximated with an exponential function as a function of decay time. Decay constants for calculating neutron, in-core gamma (active fuel region) gamma and fittings (top and bottom nozzle and plenum regions) gamma radiation source terms strength are calculated to be equal to 0.0358 years^{-1} (corresponds to ~19.4 years half-life), 0.025 years^{-1} (corresponds to ~27.7 years half-life) and 0.1315 years^{-1} (corresponds to ~5.27 years half-life) respectively. These decay constants are calculated in such a way that exponential function produces source terms that match, within 1%, the source terms calculated using SAS2H\ORIGEN-S models.

For ease of input specification in the MCNP models, the total gamma source strength (4.8937e+18 gammas per second including contribution from BPRAs and TPDs.) is calculated utilizing the exponential functions. Spectrum due to the design basis fuel assembly is used to conservatively describe the spectral distribution of gamma radiation source terms in all the casks where source is specified.

For the neutron source specification, the total neutron source strength calculated directly (1.9253e+12 neutrons per second, including sub-critical multiplication and axial source profile) with the SAS2H\ORIGEN-S models are utilized. Spectral distribution of neutron radiation source terms is due to Cm-244. MCNP provides built-in parameters to describe this distribution in the calculational models.

The assumptions for the MCNP methodology are summarized below.

- Due to symmetry of the cask loading configurations, the source specification is simplified and considered only for 12 of the 48 casks while the detectors are positioned to obtain the results as a result of this simplified source specification.

- The "universe" is a sphere surrounding the ISFSI. The radius of this sphere (r=5.0 kilometers) is more than 20 mean free paths for neutrons and more than 20 mean free paths for gammas in energy groups that contribute the most to the gamma radiation dose rates. This ensures that the model is of a sufficient size to include all interactions affecting the dose rate at the detector locations.

- "Detectors" located at distances less than or equal to 45 meters are within the ISFSI berm perimeter. Dose rates points at larger distances are behind the berm. It is likely that the dose rates beyond the berm perimeter are almost entirely due to skyshine component.

- Dose rates include contribution due to primary gamma and neutron sources as well as due to the secondary gamma radiation from (n,g) interactions.

A7A.7.2 MCNP ARRAY METHOD – DOSE RATE AS A FUNCTION OF DISTANCE

The MCNP results provide the dose rate as a function of distance at all the locations (including sides and corner) around the ISFSI. The total and skyshine dose rate results for the N/S sides, E/W sides and the corners are shown in Table A7A.7-2. The skyshine doses are shown in Table A7A.7-3 only for comparison. Due to presence of the ISFSI berm, it is expected that the dose rates at distances greater than 100m are dominated by the skyshine component and these results serve to demonstrate this assertion. Co-ordinate transformation is performed such that the results reported in Table A7A.7-2 are based on the distance from the center of the ISFSI.

A7A.8 CONFINEMENT

A7A.8.1 CONTAINMENT BOUNDARY

The containment boundary consists of the inner shell and bottom plate, shell flange, lid outer plate, lid bolts, penetration cover plate and bolts and the inner portions of the lid seal and the two lid penetrations (vent and drain). The containment vessel prevents leakage of radioactive material from the cask cavity. It also maintains an inert atmosphere (helium) in the cask cavity. Helium assists in heat removal and provides a non-reactive environment to protect fuel assemblies against fuel cladding degradation.

A7A.8.1 SEALS AND WELDS

The containment boundary welds consist of the circumferential welds attaching the bottom closure and the top flange to the vessel shell. Also, the longitudinal weld(s) on the rolled plate, closing the cylindrical vessel shell, and the circumferential weld(s) attaching the rolled shells together are containment welds.

Double metal seals are utilized on the lid and the two lid penetrations. Helicoflex HND or equivalent seals may be used. The seals are shown in Figure A7A.8-1. The internal spring and lining maintain the necessary rigidity and sealing force, and provide some elastic recovery capability. The outer aluminum jacket provides a ductile material to seal against the sealing surfaces. The jacket also provides a connecting sheet between the inner outer seals.

Holes in this sheet allow for attachment screws and for communication between the overpressure system and the space between the seals. This sheet, which is about 0.020 in. thick, has insufficient strength to transmit radial forces great enough to overcome the axial compressive forces on the seals, which are over 1000 lb/in. of seal length. Additional information on the seals is provided in Section A3.3.2. The overpressure port seal is a single metal seal of the same design, Helicoflex HN200 or equivalent.

All TN-40HT surfaces which mate with the metal seals are stainless steel.

The use of a double seal system allows the TN-40HT cask to have a pressure monitoring of the interspace between the seals. This combined cover-seal pressure monitoring system always meets or exceeds the requirement of a double barrier closure which guarantees tight, permanent confinement. When the cask is placed in storage a pressure greater than the cavity pressure is set up in the gaps (interspace) between the double metal seals of the lid and the lid penetrations. A decrease in the pressure of the monitoring system would be signaled by a pressure transducer in the overpressure system.

The lid and penetration seals described above are contained in grooves. A high level of sealing over the storage period is assured by utilizing seals in a deformation-controlled design. The deformation of the seals is constant since bolt loads assure that the mating surfaces remain in contact. The seal deformation is set by the original diameter and the depth of the groove.

The nominal cross-section diameter of the lid seal is 0.26 in. and the nominal groove depth is 0.22 in. At 0.04 in. compression, the sealing force is 1,399 lb/inch (Reference 6). The total force of the double seal is 660,129 lb. The total minimum preload of the 48 lid bolts is 71,111 lb/bolt b, which is greater than the combined force of the seals and internal pressure, 23,175 lb/bolt (Appendix A4A.4).

The nominal cross-section diameter of the port seals is 0.161 in. and the nominal groove depth is 0.126 in. At .035 in. compression, the sealing force is 1,142 lb/inch. The total force of the double seal is 37,922 lb. The total minimum preload of the 8 cover bolts is 7,111 lb/bolt, which is greater than the combined force of the seals and internal pressure, 5,058 lb/bolt (Appendix A4A.5).

The maximum radial force on the seals is from the 5.5 atm abs overpressure system. This results in a force per unit seal length of about 15 lb./in., which is negligible compared to the compressive (axial) force of over 1000 lb/inch. Because the maximum pressure is between the two seals, the direction of this force is such that the seals are supported by the walls of the seal groove. However, the seals are designed to retain pressure in either direction.

Helicoflex metal seals are all capable of limiting leak rates to much less than 1×10^{-5} ref cm^3/s. After loading, all lid and cover seals are leak tested and the acceptable total cask leakage (both inner and outer seals combined) is 1×10^{-5} ref cm^3/s.

A7A.8.2 CLOSURE

The containment vessel contains an integrally-welded bottom closure and a bolted and flanged top closure (lid). The lid plate is attached to the cask body with 48 bolts. The bolt torque required to seal the metal seals located in the lid and maintain confinement under normal and accident conditions is provided in Drawing TN40HT-72-1 in Section A1.5. The closure bolt analysis is presented in Section A4A.4.

The lid contains two penetrations which are sealed by flanged covers fastened to the lid by 8 bolts each. The bolt torque required to seal the metal seals in the penetration covers and maintain confinement under normal and accident conditions is provided in Drawing TN40HT-72-1 in Section A1.5. The penetration bolt analysis is presented in Section A4A.5.

A7A.8.3 MONITORING OF SYSTEM CONFINEMENT

An overpressure (OP) monitoring system is part of the TN-40HT design. The pressure in the monitoring system is greater than that of the cask cavity and the cask cavity pressure is greater than ambient. In this configuration, neither in-leakage of air nor out-leakage of cavity gas is possible.

If a leak existed in the seals, the design of the TN-40HT overpressure system is such that the leak will either be to the atmosphere or to the cask cavity. Leakage from the cask cavity past the higher pressure of the OP system is physically impossible.

The seals are collectively leak tested to 1×10^{-5} ref cm^3/s. Using the methodology of ANSI N14.5 (Reference 7), an equivalent maximum hole size is estimated based upon test conditions of equivalent air leaking from 1 atm abs to 0.01 atm abs in ambient temperature conditions (77 °F or 25 °C) and the maximum acceptable leak of 1×10^{-5} ref cm^3/s. The leakage hole length is assumed to be the same as the metal seal width, 0.5 cm. The equivalent maximum hole size is calculated below.

$L_u = (F_c + F_m)(P_u - P_d)(P_a/P_u)$ cc/sec at T_u, P_u

Other definitions:

- L_u = upstream volumetric leakage rate, cc/sec = 1×10^{-5} ref cm^3/s (Test Leak Rate)
- F_c = coefficient of continuum flow conductance per unit pressure, cc/atm-sec
- F_m = coefficient of free molecular flow conductance per unit pressure, cc/atm-sec
- P_u = fluid upstream pressure, atm abs = 1.0 atm abs
- P_d = fluid downstream pressure, atm abs = 0.01 atm abs
- D = leakage hole diameter, cm
- a = leakage hole length, cm = 0.5 cm (assuming leak path length is on the order of the metal seal width)
- μ = fluid viscosity, cP = 0.0185 cP (from ANSI N14.5, Table B.1)
- T = fluid absolute temperature, K = 298 K
- M = molecular weight, g/mol = 29.0 g/mol (from ANSI N14.5, Table B.1)
- P_a = average stream pressure = ½ $(P_u + P_d)$, atm abs = 0.505 atm abs

$L_u = (F_c + F_m)(P_u - P_d)(P_a/P_u)$ cc/sec

where:

$F_c = (2.49 \times 10^6 \times D^4)/(a\mu)$ cc/atm-sec

$F_m = \{3.81 \times 10^3 \times D^3 \times (T/M)^{0.5}\} / (aP_a)$ cc/atm-sec

Substituting:

$F_c = (2.49 \times 10^6 \times D^4)/(0.5 \times 0.0185) = 2.69 \times 10^8 D^4$

$F_m = \{3.81 \times 10^3 \times D^3 \times (298/29.0)^{0.5}\} / \{0.5 \times 0.505) = 4.84 \times 10^4 D^3$

$L_u = (F_c + F_m)(P_u - P_d)(P_a/P_u)$ cc/sec

$1 \times 10^{-5} = (F_c + F_m)(1.0 - 0.01)(0.505 / 1.0)$
$F_c + F_m = 2 \times 10^{-5}$

Solving the simultaneous equations, the equivalent hole diameter, D, is 4.825×10^{-4} cm.

During operations, the OP system is initially back filled with 5.5 atm abs (66.2 psig) of helium at standard temperature.

The temperature of the helium in the OP tank at equilibrium is assumed to be 160 °F (71 °C)[1]. The pressure in the OP system at this temperature will be 6.349 atm abs (79 psig). Assuming the OP system is leaking to the atmosphere, the leak rate is defined using the equations of ANSI N14.5 (Reference 7):

$L_{u,He} = (F_c + F_m)(P_u - P_d)(P_a/P_u)$ cc/sec

$F_c = (2.49 \times 10^6 \times D^4)/(a\mu)$ cc/atm-sec

$F_m = \{3.81 \times 10^3 \times D^3 \times (T/M)^{0.5}\} / (aP_a)$ cc/atm-sec

Where:

$L_{u,He}$	= helium volumetric leakage rate
P_u	= 6.349 atm abs
P_d	= 1.0 atm abs
D	= 4.825×10^{-4} cm
a	= 0.5 cm
μ	= 0.0219 cP (for helium at 344 K)
T	= 344°K
M	= 4.0 g/mol
P_a	= ½ $(P_u + P_d)$ = 3.674 atm abs

Substituting:

$F_c = \{2.49 \times 10^6 \times (4.825 \times 10^{-4})^4\}/(0.5 \times 0.0219) = 1.234 \times 10^{-5}$
$F_m = \{3.81 \times 10^3 \times (4.825 \times 10^{-4})^3 \times (344/4)^{0.5}\} / (0.5 \times 3.674) = 2.160 \times 10^{-6}$

$L_{u,He} = (F_c + F_m)(P_u - P_d)(P_a/P_u)$
$L_{u,He} = (1.234 \times 10^{-5} + 2.160 \times 10^{-6})(6.349 - 1.0)(3.674/6.349)$
$L_{u,He} = 4.489 \times 10^{-5}$ cc/sec of helium

[1] The assumed OP gas temperature is the average of the OP Tank and lid seal(s) temperatures.

Over the first year, the maximum volume leaked from the OP system is:

$V = 4.489 \times 10^{-5}$ cc/sec × (365 days/year × 24 hrs/day × 3600 sec/hr) = 1416 cc at T_u, P_u

The OP system tank consists of a 6 in. diameter schedule 80 pipe (27 in. long) and two 6 in. diameter schedule 80 end caps. The volume of the tank is 835 in^3. The volume of the OP system is increased to 900 in^3 (14,748 cc) to include the OP system tubing and the space between the metallic seals in the lid and penetrations. Correspondingly, the pressure is reduced by the following in the first year:

$P_{OP\ released} = P_{OP\ Sys,\ Initial} \times \{V_{released} / V_{OP\ Sys}\}$
$P_{OP\ released}$ = 6.349 atm (1416cc / 14748cc) = 0.609 atm

The overpressure system pressure is also corrected for the corresponding drop in temperature over the first year. At the start of the second year, the overpressure system pressure is:

$P_{OP\ start\ of\ second\ year}$ = (6.349 atm -0.609 atm)* (339.6°K/344°K) = 5.666 atm abs

These calculations are repeated every year for the 25 year life of the cask. Figure A7A.8-2 illustrates the pressure drop from the OP system to the atmosphere. Figure A7A.8-2 also illustrates the pressure drop in the cask cavity due to fuel cooling.

If a leak is to the cask cavity rather than the atmosphere, the pressure drop in the OP system is calculated using a downstream pressure the minimum cavity pressure of 1.37 atm abs (5.43 psig). Figure A7A.8-2 also illustrates the results of this analysis. In this scenario, the corresponding increase in the cask cavity pressure is negligible.

As shown above, the monitoring system pressure is greater than the cask cavity or atmospheric pressure assuming a leak based on the conservative initial acceptance test leak rate of 1×10^{-5} ref cm^3/s. Typically, Helicoflex metal seals result in joints with much lower leak rates than the acceptance criteria. Therefore, no leakage will occur from the cask cavity during the storage period.

The pressure in the overpressure system will be monitored over the lifetime of the cask. To allow time to diagnose and correct any problems, the OP monitoring system is set to alarm if the overpressure system drops below 2.89 atm abs (27.8 psig). This set point is based on the maximum off-normal cask cavity pressure (32.2 psia from Table A3.3-16) plus 0.7 atm for margin. It ensures that pressure decreases in the overpressure monitoring system are identified well before any potential out leakage from the cask cavity occurs.

A7A.8.4 CONFINEMENT REQUIREMENTS FOR NORMAL CONDITIONS OF STORAGE

The TN-40HT dry storage cask is designed to provide storage of spent fuel for at least 25 years. The cask cavity pressure is always above ambient during the storage period as a precaution against the in-leakage of air which might be harmful to the fuel. Since the containment vessel consists of a steel cylinder with an integrally-welded bottom closure, the cavity gas can escape only through the lid closure system. In order to ensure no release of radioactivity material, two systems are employed. First, all bolted closures are provided with double seals. Second, the interspace between the seals is pressurized to provide a positive pressure gradient. If the inner seals were to leak, helium would flow into the cask cavity and radioactive material would not be released. If the outer seals were to leak, helium would leak from the overpressure system to the exterior, and no radioactive material would be released.

The cask loadings for normal conditions of storage are given in Section A3.2.5. It is shown that the seals are not disturbed by any of the loadings and thus, the cask confinement is maintained.

A7A.8.5 CONFINEMENT REQUIREMENTS FOR HYPOTHETICAL ACCIDENT CONDITIONS

A7A.8.5.1 SOURCE TERMS FOR CONFINEMENT CALCULATIONS

Table A7.2-6 lists the activity representing the fission gases, volatiles, and fines contributing more than 0.1% of the activity contained in a design basis fuel, plus Iodine 129.

The releasable source term is first determined. The release fractions (References 8 and 9) applied to the source term are provided below.

Variable	Off-Normal Conditions	Accident Conditions
Fraction of crud that spalls off rods, f_C	0.15	1.0
Fraction of Rods that develop cladding breaches, f_B	0.10	1.0
Fraction of Gases that are released due to a cladding breach, f_G	0.3	0.3
Fraction of Fines that are released due to a cladding breach, f_F	$3 \times 10^{-6*}$	$3 \times 10^{-6*}$
Fraction of Volatiles that are released due to a cladding breach, f_V	2×10^{-4}	2×10^{-4}

* Per NUREG-1617, 3×10^{-5} of the fines are released during a cladding breach. Per SAND90-2406, (Reference 10), page IV-7, of the 3×10^{-5} of the fines released recommends that only 10% of the fuel fines ejected remain airborne.

The releasable source term also depends on the leak rate from the TN-40HT. Under off-normal conditions, it is assumed that the OP system is not functioning properly. In this case, the cask cavity gas is assumed to leak out at a rate of 1 x 10^{-5} std cc /sec. Assuming the cask cavity gas acts like helium (including the gases, volatiles, fines and crud), the leak rate is adjusted to a helium leak rate at cask cavity conditions using the equations of ANSI N14.5 (Reference 7). This calculation is shown below.

P_u = 2.42 atm abs , 20.9 psig (off-normal cask cavity pressure assuming 10% of the fuel rods have failed – Selected to be conservatively higher than value in Table A3.3-16)
P_d = 1.0 atm abs
D = 4.825 x 10^{-4} cm
a = 0.5 cm
μ = 0.0283 cP (for helium at 500K)
T = fluid absolute temp = average cavity gas temp = 456 °F = 508 K
M = 4.0
P_a = ½ (P_u + P_d) = 1.708 atm abs

Substituting:

F_c = 9.530E-06
F_m = 5.645E-06
$L_{u,he}$ = 1.518E-05 cc/sec of helium for off-normal conditions

Similarly, under hypothetical accident conditions, it is assumed that the OP system has stopped functioning and fire conditions exist.

P_u = 6.34 atm abs, 78.5 psig (cask cavity pressure following hypothetical fire and assuming 100% fuel rod failure – Selected to be conservatively higher than value in Table A3.3-16)
P_d = 1.0 atm abs
D = 4.825 x 10^{-4} cm a = 0.5 cm
μ = 0.0292 cP (for helium at 575 K)
T = fluid absolute temp = average cavity gas temp following fire = 592 °F = 584 K
M = 4.0
P_a = ½ (P_u + P_d) = 3.67 atm abs

Substituting in to the equations of ANSI N14.5:

F_c = 9.236E-06
F_m = 2.816E-06
$L_{u,he}$ = 3.725E-05 cc/sec of helium for hypothetical accident conditions.

The releasable contents from the TN-40HT during off-normal and hypothetical accident conditions are provided in Tables A7A.8-1 and A7A.8-2, respectively.

A7A.8.5.2 RELEASE OF CONTENTS

Two scenarios are considered:

- Off-Normal Conditions – This condition exists over a 45 day period, seals are leaking at the test leak rate of 1 x 10^{-5} ref cm^3/s and the fraction of rods that have failed is 10%. Stability category D and a 5 m/s wind speed are used for this analysis. This scenario assumes one cask is in off-normal condition at the ISFSI.

- Hypothetical Accident Conditions – This condition exists over a 30 day period, seals are leaking at the test leak rate of 1 x 10^{-5} ref cm^3/sec, the fraction of rods that have failed is 100%, and the temperature inside the cask is comparable to the fire accident conditions. Stability category F and 1 m/s wind speed is used for this analysis. This scenario assumes one cask is in the hypothetical accident condition at the ISFSI.

In the first scenario, the release is assumed to occur for more than a 20 minute period. The methodology of Reg Guide 1.145 (Reference 11) is applied. The atmospheric diffusion from a ground level point source at 110 meters is based on the following parameters.

Wind speed = 5 meter/second
σ_y = 9 meters (Reference 11, Figure 1)
σ_z = 5 meters (Reference 11, Figure 2)
M = 1.1, (Reference 11, Figure 3]
$\Sigma_y = M\sigma_y$ = 9.9 meters
A = cross sectional area of the TN-40HT = 9.1m^2

Using the methodology of Reg Guide 1.145, $\{\chi/Q\}_{110\ meters}$ during off-normal conditions is 1.29E-03 sec/m^3. Similarly, the atmospheric diffusion for 700 meters which corresponds to the distance from the ISFSI to the nearest residence (700 meters is a conservative value, 724 meters is the distance from the center of the ISFSI to the nearest resident), during off-normal conditions is calculated using the following parameters.

Wind speed = 5 meter/second
σ_y = 50 meters
σ_z = 25 meters
M = 1.1
$\Sigma_y = M\sigma_y$ = 55 meters

During off normal conditions $\{\chi/Q\}_{700\ meters}$ is 4.63E-05 sec/m^3.

In the second scenario the release is assumed to be a short term ground level release (occurring, however, over a 30 day period) assuming the methodology of Regulatory Guide 1.25 (Reference 12). The atmospheric stability classification of F and a wind speed of 1 m/sec are used. The atmospheric diffusion from a ground level point source at 110 and 724 meters is taken from Table 8.2-1 and Table 2.3-2 to be:

$\chi/Q_{110\ meters}$ = 6.63E-03 sec/m^3 and

$\chi/Q_{0.45miles}$ = 2.66E-04 sec/m^3
(nearest resident is 0.45 miles, about 724 meters from center of ISFSI)

A7A.8.5.2.1 DOSE CALCULATIONS

Dose components are calculated following the method of Regulatory Guide 1.109 (Reference 13) and utilizing dose conversion factors from EPA Federal Guidance Reports Numbers 11 and 12 (References 14 and 15). (Note: Two sets of dose conversion factors (DCFs) depending upon the chemical state of Sr-90 are reported in Federal Guidance Report Number 11. One set of DCF values is for Sr in the form of $SrTiO_3$ and the other set is for Sr in all other forms. The Sr-90 fission product should not form $SrTiO_3$ within the storage cask and therefore the DCF for this compound was not used.)

To determine the committed doses (from air inhalation), the following equation is used:

$$Dose_{inhalation} = R \times \chi/Q \times Q \times DCF_{inhalation} \times Time$$

Where:
R = Inhalation Rate = 8,000 m^3/year = 2.54E-04 m^3/sec (References 8 and13)
χ/Q = Short term average centerline value of atmospheric diffusion for a ground level release (sec/m^3)
Q = amount of material released (µCi/sec)
$DCF_{inhalation}$ = Exposure Dose Conversion Factor (mrem/µCi), from (Reference 14).
Time = Time of Exposure (Seconds)

To determine the deep doses (from air immersion), the following equation is used:

$$Dose_{air\ immersion} = \{\chi/Q \times Q \times DCF_{air\ immersion}\} \times Time$$

Where:
χ / Q = Short term average centerline value of atmospheric diffusion for a ground level release (sec/m^3)
Q = amount of material released (µCi/sec)
$DCF_{immersion}$ = Exposure Dose Conversion Factor (mrem/year per µCi/cm^3), (Reference 15)
Time = Time of Exposure (Seconds)

For off-normal conditions, the estimated 45 day airborne doses (internal and external) at 110 meters from a single TN-40HT cask are provided in Table A7A.8-3 and Table A7A.8-4. The sum of the deep dose (external) and the committed dose (internal) on an organ basis and total effective dose for distances of 110, and 700 meters are summarized below:

Target	Dose at 110 meters (mrem)	Dose at 700 meters (mrem)
Gonad	4.69E-02	1.69E-03
Breast	1.48E-02	5.34E-04
Lung	3.85E-01	1.39E-02
Red Marrow	3.32E-01	1.20E-02
Bone Surface	**2.90E+00**	**1.04E-01**
Thyroid	1.43E-02	5.15E-04
Remainder	1.26E-01	4.52E-03
Effective	**2.95E-01**	**1.06E-02**
Skin	1.73E-03	6.24E-05

The values presented in bold print above demonstrate that the criteria of 10CFR-72.104 are met under off-normal conditions.

For hypothetical accident conditions, the committed doses (internal) and the deep doses (external) at 110 meters from a single TN-40HT cask for a 30 day exposure are provided in Table A7A.8-5 and Table A7A.8-6. The total effective dose equivalent at 110 m and at 724 m from the TN-40HT cask is summarized in the table below.

Target	Dose at 110 meters (mrem/yr)	Dose at 724 meters (mrem/yr)
Gonad	3.88E+00	1.56E-01
Breast	9.79E-01	3.93E-02
Lung	2.75E+01	1.10E+00
Red Marrow	2.78E+01	1.11E+00
Bone Surface	2.44E+02	9.79E+00
Thyroid	9.66E-01	3.88E-02
Remainder	1.01E+01	4.04E-01
Effective (TEDE)	2.40E+01	9.63E-01
Skin	1.38E-01	5.54E-03
Lens Dose (Skin + TEDE)	2.41E+01	9.68E-01

The maximum 30-day TEDE value is 0.024 rem. The corresponding 10CFR 72.106 limit is 5 rem.

The maximum 30-day Lens Dose Equivalent value is 0.0241 rem. The corresponding 10CFR 72.106 limit is 15 rem.

The maximum 30-day dose to any organ/tissue is 0.244 rem and it occurs at the bone surface. The corresponding 10CFR 72.106 limit is 50 rem.

Therefore all the criteria of 72.106 are met at 110 m.

A summary of the doses at 110 m and their corresponding regulatory limits is shown below.

Off-Normal Conditions		
Organ	**10CFR72.104(a) Limit (mrem)**	**110 meter Dose (mrem)**
Whole Body (TEDE)	25	0.30
Thyroid	75	0.01
Other Critical Organ	25	2.90 (Bone Surface)
Accident Conditions		
Organ	**10CFR72.106(b) Limit (mrem)**	**110 meter Dose (mrem)**
Whole Body (TEDE)	5000	24.0
Organ (TODE)	50000	244 (Bone Surface)
Lens of Eye (LDE)	15000	24.1
Skin (SDE)	50000	0.14

A7A.8.5.3 LATENT SEAL FAILURE

By design the overpressure monitoring system does not immediately alarm if there is a leak in a seal or the overpressure system. The time period from when a leak begins to occur and when the overpressure system alarm is activated is dependent on the size of the leak. Two conditions which could exist within the TN-40HT confinement system are:

(1) The outer seal (or the overpressure system) is leaking to the atmosphere. In this case the inner seal is intact and there is no release of the contents of the cask cavity to the atmosphere.

(2) The inner seal is leaking (or the overpressure system is leaking into the cask cavity). In this case the outer seal is still intact and there is no release of the cask cavity contents to the atmosphere.

If a latent seal leak has occurred, the tables below provide some examples of the time to alarm based on assumed leakage rates.

Case 1 - Leakage of Overpressure System to the Atmosphere		
Leak Rate (ref cm^3/s)	**Estimated Time to Alarm (from Start of Latent Seal Failure)**	**Estimated Time to Loss of OP System Pressure (from Start of Latent Seal Failure)**
1×10^{-3}	19 days	34 days
1×10^{-4}	195 days	358 days
5×10^{-4}	1.2 year	6 years
1×10^{-5} (see Figure A7A.8-2)	9.5 years	over 40 years

Case 2 – Leakage of Overpressure System to Cask Cavity		
Leak Rate (ref cm^3/s)	**Estimated Time to Alarm (from Start of Latent Seal Failure)**	**Estimated Time to Equalize OP System Pressure with Cask Cavity Pressure (from Start of Latent Seal Failure)**
1×10^{-3}	19 days	28 days
1×10^{-4}	201 days	288 days
5×10^{-4}	1.4 years	13 years
1×10^{-5} (see Figure A7A.8-2)	9.5 years	over 40 years

As shown in the tables above, the alarm is set such that for any credible leak, there is time to evaluate the leaking condition and correct the condition provided that the overpressure system remains pressurized. This period can be extended by re-pressurizing the overpressure tank.

Another condition which has been considered is that a latent seal failure has occurred and the overpressure system is removed due to an accident.

(1) If the outer seal has the latent failure and the OP system is removed then there is no release of cask cavity contents to the atmosphere.

(2) If the inner seal has a latent failure and the OP system is removed then the table below provides the time before 10 CFR 72.106(b) limits will be exceeded.

Standard Leak Rate (ref cm^3/sec)	Time to exceed 10 CFR 72.106(b) Limits
1×10^{-3}	59 days
1×10^{-4}	602 days
5×10^{-5}	1213 days
1×10^{5}	6145 days

The times above demonstrate that a latent failure up to 100 times greater than the test value could occur and still allow recovery.

The time to reach the accident release limits is dependent on the size of the leak. Due to the reliability of the metal seals used in static applications, it is not considered credible that the inner seals could leak at a rate significantly higher than the test leak rate. The probability that a gross leak of an inner seal in combination with a gross leak in an outer seal or the overpressure system, such that the overpressure system could not hold pressure, is not considered a credible event.

A7A.9 REFERENCES

1. "MCNP/MCNPX – Monte Carlo N-Particle Transport Code System Including MCNP5 1.40 and MCNPX 2.5.0 and Data Libraries," CCC-730, Oak Ridge National Laboratory, RSICC Computer Code Collection, January 2006.

2. ANSI/ANS 6.1-1-1977, "Neutron and Gamma Ray Flux-to-Dose Rate Factors."

3. Title 10 Code of Federal Regulations Part 72, "Licensing Requirements for the Independent Storage of Spent Nuclear Fuel and High-Level Radioactive Waste."

4. Title 10 Code of Federal Regulations Part 20, "Standards for Protection Against Radiation."

5. Title 40 Code of Federal Regulations Part 190, "Environmental Radiation Protection Standards for Nuclear Power Operations."

6. Helicoflex Catalogue ET 507 E5930.

7. ANSI N14.5-1997, "Leakage Tests on Packages for Shipment," February 1998.

8. USNRC, Spent Fuel Project Office, Interim Staff Guidance No. 5, Revision 1.

9. NUREG-1617, "Standard Review Plan for Transportation Packages for Spent Nuclear Fuel, Draft Report for Comment," US Nuclear Regulatory Commission, March 1998.

10. SAND90-2406, "A Method for Determining the Spent Fuel Contribution to Transport Cask Containment Requirements," Sandia National Laboratories, November 1992.

11. USNRC Regulatory Guide 1.145,"Atmospheric Dispersion Models for Potential Accident Consequence Assessment at Nuclear Power Plants," Rev 1, 1983.

12. USNRC Regulatory Guide 1.25, "Assumptions Used for Evaluating the Potential Radiological Consequences of a Fuel Handling Accident in the Fuel Handling Storage Facility for Boiling and Pressurized Water Reactors."

13. USNRC Regulatory Guide 1.109, "Calculation of Annual Doses to Men from Routing Releases of Reactor Effluent for the Purpose of Evaluating Compliance with 10CFR50, Appendix I," Rev 1, 1977.

14. USEPA Federal Guidance Report No 11, "Limiting Values of Radionuclide Intake and Air Concentration and Dose Conversion Factors for Inhalation, Submersion and Ingestion," EPA-520/1-88-0202, September 1988.

15. USEPA Federal Guidance Report No 12, "External Exposure to Radionuclides in Air, Water, and Soil," EPA-402-R-93-081, September, 1983.

TABLE A7A.1-1
TN-40HT CASK SHIELD MATERIALS

Component	Material	Density (g/cm^3)	Thickness (inches)
Cask Body Wall	Carbon Steel	7.82	8.75
Lid	Carbon Steel	7.82	10.00
Bottom	Carbon Steel	7.82	8.75
Resin (1)	Polyester Resin Styrene Aluminum Hydrate Zinc Borate	1.58	5.00
Aluminum Box	Aluminum	2.7	0.12
Outer Shell	Carbon Steel	7.82	0.50
Basket (2)	Stainless Steel (Inserts)	7.94	0.19
	Stainless Steel (Strips)	7.94	0.44
	Aluminum Neutron Poison Material (3)	2.7	0.44
Protective Cover	Carbon Steel	7.82	0.38
Polypropylene Disc	Polypropylene	0.90	4.00

Notes:

(1) The neutron shielding is borated polyester resin compound with a density of 1.58 g/cc. The four major constituents are listed in the table.

(2) The stainless steel inserts of the basket are 0.19 inches thick. The intermittent stainless steel strips are not modeled.

(3) The neutron poison material is modeled as aluminum for shielding purposes.

TABLE A7A.2-1
SUMMARY OF AVERAGE DOSE RATES

	Average Dose Rates (mrem/hr) for Normal and Off-Normal Conditions							
	Side Above Shield[1]	Side Along Shield[5]	Side Below Shield[2]	Top Surface[3] (Protective Cover)	Side Surface[7]	Bottom Surface[4]	1 Meter from Side	2 Meter from Side
Gamma	61.3	32.7	52.9	18.5	35.5	272	12.8	7.61
Neutron	146	28.2	706	7.6	78.7	1515	18.9	10.6
Total	208	60.9	759	26.1	114	1790	31.7	18.2

	Average Dose Rates (mrem/hr) for Accident Conditions[6]							
				Top Surface[8] (Protective Cover)	Side Surface[7]	Bottom Surface	1 Meter from Side	2 Meter from Side
Gamma	-	-	-	63.4	116	-	50.6	31.0
Neutron	-	-	-	135	1980	-	785	444
Total	-	-	-	198	2095	-	835	475

Notes:

(1) Maximum surface dose rates above the neutron shield are 81.5 mrem/hr gamma and 189 mrem/hr neutron.
(2) Maximum surface dose rates below the neutron shield are 86.5 mrem/hr gamma and 928 mrem/hr neutron.
(3) Maximum surface dose rates on the protective cover are 45.5 mrem/hr gamma and 12.7 mrem/hr neutron.
(4) Maximum surface dose rates on the cask bottom are 804 mrem/hr gamma and 3980 mrem/hr neutron.
(5) Maximum surface dose rates on the cask side are 39.3 mrem/hr gamma and 34.8 mrem/hr neutron
(6) The radial neutron shield and outer shell are removed from the sides. The polypropylene disk and protective cover are removed from the top.
(7) Includes surfaces above and below the radial neutron shield.
(8) Top surface dose rate is on the Top Surface of the Cask Lid

Note: Maximum gamma and neutron dose rates may not occur at the same location.

TABLE A7A.2-2
DOSE RATES AT A DISTANCE FROM ONE TN-40HT CASK

Total Dose Rate Results

Distance (meter)	Gamma (mrem/hr)	Error	Neutron (mrem/hr)	Error
10	1.02E+00	0.0048	2.01E+00	0.0047
20	2.68E-01	0.0064	5.43E-01	0.0056
25	1.69E-01	0.0050	3.51E-01	0.0058
30	1.16E-01	0.0051	2.44E-01	0.0061
40	6.30E-02	0.0054	1.35E-01	0.0065
50	3.86E-02	0.0056	8.35E-02	0.0069
75	1.53E-02	0.0062	3.35E-02	0.0081
100	7.59E-03	0.0069	1.67E-02	0.0090
150	2.62E-03	0.0076	5.50E-03	0.0112
175	1.68E-03	0.0081	3.48E-03	0.0141
250	5.35E-04	0.0086	1.00E-03	0.0155
300	2.74E-04	0.0097	4.94E-04	0.0161
350	1.52E-04	0.0123	2.52E-04	0.0193
400	8.37E-05	0.0133	1.36E-04	0.0226
500	2.89E-05	0.0147	4.44E-05	0.0247
600	1.07E-05	0.0161	1.52E-05	0.0253
800	1.76E-06	0.0220	2.30E-06	0.0296
1,100	1.52E-07	0.0427	1.77E-07	0.0348
1,500	7.30E-09	0.1118	8.75E-09	0.0267
2,000	2.76E-10	0.2795	3.10E-10	0.0239

TABLE A7A.4-1
ANSI STANDARD-6.1.1-1977 FLUX-TO-DOSE FACTORS

Photon energy (MeV)	Response Function (rem/hr)/(γ/cm^2-s)	Neutron energy (MeV)	Response Function (rem/hr)/(n/cm^2-s)
0.01	3.96E-06	2.5E-08	3.67E-06
0.03	5.82E-07	1.0E-07	3.67E-06
0.05	2.90E-07	1.0E-06	4.46E-06
0.07	2.58E-07	1.0E-05	4.54E-06
0.10	2.83E-07	1.0E-04	4.18E-06
0.15	3.79E-07	1.0E-03	3.76E-06
0.20	5.01E-07	1.0E-02	3.56E-06
0.25	6.31E-07	1.0E-01	2.17E-05
0.30	7.59E-07	5.0E-01	9.26E-05
0.35	8.78E-07	1.0	1.32E-04
0.40	9.85E-07	2.5	1.25E-04
0.45	1.08E-06	5.0	1.56E-04
0.50	1.17E-06	7.0	1.47E-04
0.55	1.27E-06	10.0	1.47E-04
0.60	1.36E-06	14.0	2.08E-04
0.65	1.44E-06	20.0	2.27E-04
0.70	1.52E-06		
0.80	1.68E-06		
1.0	1.98E-06		
1.4	2.51E-06		
1.8	2.99E-06		
2.2	3.42E-06		
2.6	3.82E-06		
2.8	4.01E-06		
3.25	4.41E-06		
3.75	4.83E-06		
4.25	5.23E-06		
4.75	5.60E-06		
5.0	5.80E-06		
5.25	6.01E-06		
5.75	6.37E-06		
6.25	6.74E-06		
6.75	7.11E-06		
7.5	7.66E-06		
9.0	8.77E-06		
11.0	1.03E-05		
13.0	1.18E-05		
15.0	1.33E-05		

TABLE A7A.4-2
ATOMIC FRACTIONS FOR THE HOMOGENIZED DESIGN BASIS 14X14 FUEL

Nuclide ID	Element	Atomic Fraction
Active Fuel Region, Density = 3.949 g/cm^3		
8016	Oxygen	0.5453
92235	Uranium	0.0094
92238	Uranium	0.2631
40000	Zirconium	0.1420
24000	Chromium	0.0072
26000	Iron	0.0165
28000	Nickel	0.0125
Bottom Nozzle Region, Density = 2.595 g/cm^3		
14000	Silicon	0.0194
24000	Chromium	0.1995
25055	Manganese	0.0199
26000	Iron	0.6684
28000	Nickel	0.0884
Plenum Region, Density = 1.543 g/cm^3		
40000	Zirconium	0.2640
14000	Silicon	0.0164
24000	Chromium	0.1436
25055	Manganese	0.0131
26000	Iron	0.4465
28000	Nickel	0.1084
Top Nozzle Region, Density = 1.970 g/cm^3		
14000	Silicon	0.0216
24000	Chromium	0.1966
25055	Manganese	0.0184
26000	Iron	0.6245
28000	Nickel	0.1326

TABLE A7A.4-3
SHIELD REGIONAL DENSITIES FOR TN-40HT MCNP MODEL
(PAGE 1 OF 2)

			Carbon Steel(1)		**Stainless Steel 304(1)**		**Air(2)**		**Aluminum(1)**	
gram density (g/cc)			7.8212		7.94		1.23E-03		2.702	
atom density (atom/barn-cm)			0.08742		0.08759		0.00051		0.06031	
Element	Z	M	wt. %	at. %	wt. %	at. %	wt. %	at. %	wt. %	at. %
H	1	1.0								
C	6	12.0	1	4.486	0.08	0.364	0.014	0.017		
N	7	14.0					75.52	79.44		
O	8	16.0					23.18	21.08		
Al	13	27.0							100	100
Si	14	28.1			1	1.944				
P	15	31.0			0.045	0.079				
Ar	18	39.9					1.29	0.47		
Cr	24	52.0			19	19.949				
Ti	22	47.9								
Mn	25	54.9			2	1.987				
Fe	26	55.8	99	95.514	68.375	66.841				
Ni	28	58.7			9.5	8.836				
Zr	40	91.2								
Sn	50	118.7								
Hf	72	178.5								
		Total	100	100	100	100	100	100	100	100

Notes:

(1) – SCALE Standard Material Composition
(2) - ANSI/ANS-6.6.1, Dry Air

TABLE A7A.4-3
SHIELD REGIONAL DENSITIES FOR TN-40HT MCNP MODEL
(Page 2 of 2)

			Concrete[1]		Polyester Resin		Polypropylene[2]		Soil[3]	
gram density (g/cc)			2.32		1.58		0.9		1.625	
atom density (atom/barn-cm)			0.074447		0.106815		0.115918		0.068588	
Element	Z	M	wt. %	at. %	wt. %	at. %	wt. %	at. %	wt. %	at. %
H	1	1.0	0.56	10.427	5.05	44.631	14.37	66.667	2.10	29.73
C	6	12.0			35.13	26.054	85.63	33.333	1.60	1.90
Na	11	23.0	1.71	1.396						
O	8	16.0	49.83	58.449	41.73	23.234			57.70	51.46
Mg	12	24.3	0.24	0.185						
Al	13	27.0	4.56	3.172	14.93	4.929			5.00	2.64
Si	14	28.1	31.58	21.102					27.10	12.06
S	16	32.1	0.12	0.070						
K	19	39.1	1.92	0.922					1.30	0.47
Ca	20	40.1	8.26	3.868					4.10	1.46
Fe	26	55.8	1.22	0.410					1.10	0.28
B	5	10.8			1.05	0.865				
Zn	30	65.4			2.11	0.288				
		Total	100	100	100	100	100	100	100	100

Notes:

(1) - ANSI/ANS-6.4.3
(2) - Chemestry & Physics Handbook
(3) - Jacob, Radiation Protection Dosimetry 14, 299, 1986

TABLE A7A.5-1
TN-40HT NEAR FIELD DOSE RATES – NORMAL AND OFF-NORMAL CONDITIONS

Axial Location (cm)	Cask Side Surface (mrem/hr)		
	gamma	neutron	total
-205.3	19.4	484	503
-189.8	86.5	928	1014
-176.0	55.9	116	172
-164.0	72.1	43.2	115
-143.1	29.7	31.5	61.2
-113.3	33.5	34.1	67.6
-83.6	34.6	34.8	69.5
-53.8	35.6	31.0	66.6
-24.0	32.6	28.5	61.1
5.8	31.3	27.2	58.4
35.6	39.3	29.1	68.4
65.4	33.8	25.8	59.6
95.1	31.0	23.6	54.6
124.9	25.4	16.7	42.1
148.8	23.7	13.3	36.9
166.3	17.5	25.0	42.4
183.8	19.9	25.4	45.3
201.3	22.1	17.6	39.7
216.5	81.5	189	271
231.5	41.1	104	145
Average	**35.5**	**78.7**	**114**

Radial Location (cm)	Protective Cover (mrem/hr)			Top Neutron Shield (mrem/hr)			Cask Bottom (mrem/hr)		
	g	n	total	g	n	total	g	n	total
5.7	45.3	2.16	47.5	76.8	9.07	85.9	770	3979	4749
17.1	45.5	2.97	48.5	81.5	6.17	87.7	797	3905	4702
28.5	43.3	2.87	46.2	81.7	5.08	86.8	804	3670	4474
39.9	41.0	2.04	43.1	79.0	4.84	83.8	781	3446	4227
51.3	38.0	2.25	40.3	76.5	5.83	82.3	784	3119	3903
62.7	31.5	2.12	33.6	66.2	5.35	71.6	713	2686	3399
74.1	25.2	2.82	28.1	50.2	5.02	55.2	530	2261	2791
85.5	18.8	5.22	24.0	31.2	7.48	38.7	272	1724	1996
96.9	13.4	9.80	23.2	19.0	38.9	57.9	95.8	1104	1200
108.3	9.8	12.7	22.5	11.3	41.9	53.1	30.5	545	575
Average	**18.5**	**7.6**	**26.1**	**31.7**	**24.1**	**55.7**	**272**	**1515**	**1790**

TABLE A7A.5-2
TN-40HT NEAR FIELD DOSE RATES – NORMAL AND OFF-NORMAL CONDITIONS

Axial Location (cm)	1 M from cask side surface (mrem/hr)				2 M from cask side surface (mrem/hr)			
	gamma	neutron	total	error*	gamma	neutron	total	error*
-200.3	12.1	52.6	64.7	0.012	6.52	18.6	25.1	0.013
-175.0	12.6	46.8	59.4	0.012	7.30	18.8	26.1	0.013
-149.6	13.0	34.5	47.5	0.012	7.64	17.2	24.8	0.013
-124.3	13.7	26.6	40.3	0.014	7.98	15.7	23.6	0.013
-98.9	14.7	22.3	37.0	0.014	8.53	14.2	22.8	0.013
-73.6	15.4	19.1	34.4	0.013	8.87	12.8	21.7	0.013
-48.2	15.7	17.1	32.8	0.014	9.06	11.3	20.4	0.013
-22.9	15.7	16.4	32.2	0.014	9.17	11.0	20.2	0.014
2.5	15.7	14.6	30.3	0.014	9.16	10.0	19.2	0.013
27.8	15.7	13.7	29.4	0.015	9.15	9.2	18.4	0.014
53.2	15.2	12.4	27.6	0.014	8.92	8.8	17.7	0.014
78.5	14.4	11.5	25.9	0.018	8.53	8.3	16.8	0.014
103.9	13.3	11.8	25.1	0.024	7.98	8.1	16.1	0.015
129.2	11.9	10.4	22.3	0.016	7.59	7.7	15.3	0.015
154.6	10.8	9.6	20.4	0.016	7.00	7.4	14.4	0.015
179.9	10.1	10.3	20.4	0.016	6.54	6.9	13.4	0.015
205.3	9.9	11.8	21.8	0.016	6.18	7.0	13.2	0.016
230.6	10.1	12.9	23.0	0.020	5.83	6.8	12.6	0.017
256.0	8.9	12.4	21.3	0.017	5.43	6.6	12.0	0.021
281.3	6.5	12.0	18.5	0.020	4.84	6.4	11.2	0.018
Average	**12.8**	**18.9**	**31.7**		**7.61**	**10.6**	**18.3**	

Radial Location (cm)	1 M from Protective Cover (mrem/hr)				2 M from Protective Cover (mrem/hr)			
	gamma	neutron	total	error*	gamma	neutron	total	error*
5.7	17.9	1.91	19.8	0.046	8.99	0.52	9.51	0.060
17.1	17.4	1.87	19.2	0.030	8.59	1.40	10.0	0.050
28.5	17.2	1.37	18.6	0.024	8.69	1.19	9.88	0.038
39.9	16.4	1.57	18.0	0.022	8.34	1.28	9.61	0.032
51.3	15.0	1.94	17.0	0.022	7.90	1.34	9.24	0.029
62.7	13.6	1.45	15.0	0.019	7.34	1.59	8.93	0.033
74.1	12.6	2.27	14.9	0.022	7.07	1.20	8.27	0.028
85.5	10.9	2.71	13.6	0.022	6.44	1.60	8.04	0.028
96.9	9.5	3.36	12.9	0.025	6.00	1.78	7.78	0.028
108.3	8.4	3.34	11.7	0.025	5.77	1.98	7.75	0.030
Average	**10.7**	**2.79**	**13.5**		**6.44**	**1.67**	**8.11**	

* - fractional standard deviation

TABLE A7A.5-3
TN-40HT NEAR FIELD DOSE RATES – NORMAL AND OFF-NORMAL CONDITIONS (DOSE RATES ABOVE AND BELOW THE RADIAL NEUTRON SHIELD)

Axial Location (cm)	Surface Dose (mrem/hr)				
	gamma	neutron	total	error*	
216.5	81.5	189	271	0.014	above N shield
231.5	41.1	104	145	0.017	
-205.3	19.4	484	503	0.018	below N shield
-189.8	86.5	928	1014	0.012	

* - fractional standard deviation

TABLE A7A.5-4
TN-40HT NEAR FIELD DOSE RATES – ACCIDENT CONDITIONS
(PAGE 1 OF 2)

Axial Location (cm)	Cask Surface (mrem/hr)			1 M from Cask Surface (mrem/hr)			2 M from Cask Surface (mrem/hr)		
	g	n	total	g	n	total	g	n	total
-200.3	36.4	650	687	33.9	642	676	21.6	384	406
-175.0	125	1396	1522	45.0	743	788	26.5	433	459
-149.6	137	2243	2381	54.7	863	917	30.5	479	509
-124.3	150	2919	3069	60.9	975	1036	34.1	522	556
-98.9	152	3276	3428	64.1	1077	1141	36.5	551	588
-73.6	152	3404	3556	65.6	1137	1202	38.2	573	611
-48.2	150	3347	3497	66.0	1178	1244	39.5	594	633
-22.9	135	3236	3372	65.8	1193	1259	40.4	597	637
2.5	110	3219	3319	66.7	1182	1249	40.4	590	630
27.8	188	3403	3592	67.3	1143	1210	40.2	581	621
53.2	162	3295	3457	67.0	1073	1140	39.0	552	591
78.5	146	2933	3079	64.7	974	1039	37.3	516	553
103.9	141	2417	2558	60.0	854	914	35.5	476	512
129.2	120	1741	1861	53.6	718	771	32.3	428	460
154.6	89.3	1062	1151	47.3	581	628	28.9	378	407
179.9	101	553	655	40.4	450	490	25.2	329	355
205.3	114	254	367	33.4	340	374	21.9	283	305
230.6	48.6	109	158	25.2	248	274	18.0	242	260
256.0	33.5	60.5	93.9	17.9	183	201	14.7	203	217
281.3	18.4	61.7	80.1	12.4	139	152	11.7	167	179
Average	116	1980	2095	50.6	785	835	30.6	444	475

TABLE A7A.5-4
TN-40HT NEAR FIELD DOSE RATES – ACCIDENT CONDITIONS
(PAGE 2 OF 2)

Radial Location (cm)	Lid Surface[1] (mrem/hr)			1 M from Lid (mrem/hr)			2 M from Lid (mrem/hr)		
	g	n	total	g	n	total	g	n	total
5.7	179	334	513	89.8	82.2	172	44.0	27.9	71.9
17.1	175	318	493	89.3	82.8	172	42.7	36.1	78.8
28.5	172	305	477	88.0	85.3	173	41.4	33.9	75.3
39.9	173	287	461	79.9	77.0	157	39.8	30.2	70.0
51.3	168	260	428	74.3	79.2	153	37.7	32.9	70.7
62.7	155	228	383	65.1	70.8	136	35.0	30.8	65.8
74.1	112	200	312	55.9	64.4	120	32.3	32.5	64.8
85.5	57.6	155	212	46.6	59.1	106	29.4	31.4	60.8
96.9	18.9	94.4	113	37.5	54.0	91.5	26.3	31.2	57.6
108.3	24.3	59.9	84.7	29.8	51.6	81.5	22.9	28.2	51.2
Average	63.4	135	198	44.9	59.0	104	28.4	30.6	59.1

Notes:

1. - Lid surface dose same as in normal conditions

TABLE A7A.6-1
TN-40HT - SINGLE CASK FARFIELD DOSE RATES

Skyshine Dose Rate Results					Direct Dose Rate Results		
Distance (meter)	Gamma (mrem/hr)	Error*	Neutron (mrem/hr)	Error*	Distance (meter)	Gamma (mrem/yr)	Neutron (mrem/yr)
10	1.17E-02	0.0072	1.29E-01	0.0052	10	1.01E+00	1.88E+00
20	9.35E-03	0.0057	9.30E-02	0.0041	20	2.59E-01	4.50E-01
25	8.36E-03	0.0054	7.91E-02	0.0041	25	1.61E-01	2.72E-01
30	7.52E-03	0.0055	6.73E-02	0.0040	30	1.09E-01	1.77E-01
40	6.09E-03	0.0053	4.89E-02	0.0040	40	5.69E-02	8.61E-02
50	4.99E-03	0.0052	3.68E-02	0.0053	50	3.36E-02	4.68E-02
75	3.19E-03	0.0057	1.93E-02	0.0079	75	1.21E-02	1.42E-02
100	2.10E-03	0.0058	1.10E-02	0.0085	100	5.49E-03	5.72E-03
150	1.02E-03	0.0065	4.19E-03	0.0110	150	1.61E-03	1.32E-03
175	7.19E-04	0.0073	2.79E-03	0.0150	175	9.56E-04	6.89E-04
250	2.80E-04	0.0081	8.68E-04	0.0154	250	2.55E-04	1.33E-04
300	1.57E-04	0.0102	4.38E-04	0.0148	300	1.17E-04	5.58E-05
350	9.40E-05	0.0137	2.29E-04	0.0181	350	5.84E-05	2.21E-05
400	5.39E-05	0.0147	1.27E-04	0.0217	400	2.98E-05	9.47E-06
500	1.99E-05	0.0117	4.20E-05	0.0220	500	8.98E-06	2.41E-06
600	7.72E-06	0.0129	1.42E-05	0.0230	600	2.97E-06	1.02E-06
800	1.35E-06	0.0130	2.19E-06	0.0261	800	4.07E-07	1.13E-07
1,100	1.20E-07	0.0191	1.73E-07	0.0331	1,100	3.14E-08	3.88E-09
1,500	5.91E-09	0.0408	8.72E-09	0.0266	1,500	1.39E-09	2.21E-11
2,000	1.91E-10	0.1226	3.1E-10	0.0234	2,000	8.52E-11	1.93E-12

- * - fractional standard deviation

TABLE A7A.7-1
TN-40HT ISFSI DETECTOR LOCATIONS FOR SITE DOSE EVALUATION

Distance (meters)	"North Detectors": Distance is measured from (X,Y)=(-548.64, 676.91) cm. "X" is constant. Tally F5.		"South Detectors": Distance is measured from (X,Y)=(-548.64, -128.27) cm. "X" is constant. Tally F15.		"West Detectors": Distance is measured from (X,Y)=(-7595.87, 274.32) cm. "Y" is constant. Tally F25.		"East Detectors": Distance is measured from (X,Y)=(6498.59, 274.32) cm. "Y" is constant. Tally F35.	
	Point Detector #	"Y" Coordinate, (meters)	Point Detector #	"Y" Coordinate, (meters)	Point Detector #	"X" Coordinate, (meters)	Point Detector #	"X" Coordinate, (meters)
0	1	6.77	14	-1.28	27	-75.96	40	64.99
10	2	16.77	15	-11.28	28	-85.96	41	74.99
45	3	51.77	16	-46.28	29	-120.96	42	109.99
100	4	106.77	17	-101.28	30	-175.96	43	164.99
200	5	206.77	18	-201.28	31	-275.96	44	264.99
300	6	306.77	19	-301.28	32	-375.96	45	364.99
400	7	406.77	20	-401.28	33	-475.96	46	464.99
500	8	506.77	21	-501.28	34	-575.96	47	564.99
600	9	606.77	22	-601.28	35	-675.96	48	664.99
700	10	706.77	23	-701.28	36	-775.96	49	764.99
800	11	806.77	24	-801.28	37	-875.96	50	864.99
900	12	906.77	25	-901.28	38	-975.96	51	964.99
1000	13	1006.77	26	-1001.28	39	-1075.96	52	1064.99

Distance (meters)	"North-West Detectors": Distance is measured from (X,Y)=(-7558.30, 639.34) cm. "X" is constant. Tally F45.			"North-East Detectors": Distance is measured from (X,Y)=(6461.02, 639.34) cm. "Y" is as in Tally F45. Tally F55.		"South-West Detectors": Distance is measured from (X,Y)=(-7558.30, -90.70) cm. "X" is constant. Tally F65.			"North-East Detectors": Distance is measured from (X,Y)=(6461.02, -90.70) cm. "Y" is as in Tally F65. Tally	
	Point Detector #	"X" Coord, (meters)	"Y" Coord, (meters)	Point Detector #	"X" Coord, (meters)	Point Detector #	"X" Coord, (meters)	"Y" Coord, (meters)	Point Detector #	"X" Coord, (meters)
10	53	-82.65	13.46	65	71.68	77	-82.65	-7.98	89	71.68
45	54	-107.40	38.21	66	96.43	78	-107.40	-32.73	90	96.43
100	55	-146.29	77.10	67	135.32	79	-146.29	-71.62	91	135.32
200	56	-217.00	147.81	68	206.03	80	-217.00	-142.33	92	206.03
300	57	-287.72	218.53	69	276.74	81	-287.72	-213.04	93	276.74
400	58	-358.43	289.24	70	347.45	82	-358.43	-283.75	94	347.45
500	59	-429.14	359.95	71	418.16	83	-429.14	-354.46	95	418.16
600	60	-499.85	430.66	72	488.87	84	-499.85	-425.17	96	488.87
700	61	-570.56	501.37	73	559.59	85	-570.56	-495.88	97	559.59
800	62	-641.27	572.08	74	630.30	86	-641.27	-566.59	98	630.30
900	63	-711.98	642.79	75	701.01	87	-711.98	-637.30	99	701.01
1000	64	-782.69	713.50	76	771.72	88	-782.69	-708.01	100	771.72

TABLE A7A.7-2
DOSE RATES AS A FUNCTION OF DISTANCE FROM THE ISFSI
(PAGE 1 OF 2)

From the ISFSI "North\South" Faces

Distance from the ISFSI Center (meters)	Gamma Radiation		Neutron Radiation		Total, Gamma+Neutron, Radiation	
	Dose Rate Value, mrem/hr	Dose Rate Relative Error	Dose Rate Value, mrem/hr	Dose Rate Relative Error	Dose Rate Value, mrem/hr	Dose Rate Relative Error
4.03	5.51	0.02	6.94	0.04	12.45	0.02
14.03	3.57	0.01	4.84	0.03	8.42	0.02
49.03	1.09	0.01	1.56	0.02	2.65	0.02
104.03	0.06	0.01	0.22	0.02	0.28	0.02
204.03	0.02	0.01	0.04	0.03	0.06	0.02
304.03	0.005	0.01	0.010	0.04	0.015	0.02
404.03	0.002	0.02	0.003	0.05	0.005	0.03
504.03	6.29e-4	0.03	9.06e-4	0.05	1.53e-3	0.03
604.03	2.52e-4	0.03	3.24e-4	0.09	5.77e-4	0.05
704.03	1.42e-4	0.18	1.30e-4	0.11	2.72e-4	0.11
804.03	6.13e-5	0.07	6.02e-5	0.24	1.22e-4	0.12
904.03	2.80e-5	0.06	1.95e-5	0.12	4.75e-5	0.06
1004.03	1.72e-5	0.09	9.21e-6	0.15	2.64e-5	0.08

From the ISFSI "East\West" Faces

Distance from the ISFSI Center (meters)	Gamma Radiation		Neutron Radiation		Total, Gamma+Neutron, Radiation	
	Dose Rate Value, mrem/hr	Dose Rate Relative Error	Dose Rate Value, mrem/hr	Dose Rate Relative Error	Dose Rate Value, mrem/hr	Dose Rate Relative Error
70.47	33.29	0.03	28.73	0.04	62.03	0.02
80.47	2.77	0.02	4.43	0.04	7.20	0.03
115.47	0.06	0.01	0.25	0.02	0.30	0.02
170.47	0.03	0.01	0.10	0.02	0.13	0.02
270.47	0.01	0.02	0.02	0.02	0.03	0.02
370.47	0.002	0.02	0.005	0.05	0.008	0.04
470.47	0.001	0.03	0.002	0.06	0.002	0.04
570.47	3.06e-4	0.03	4.77e-4	0.06	7.83e-4	0.04
670.47	1.25e-4	0.03	2.33e-4	0.12	3.58e-4	0.08
770.47	5.77e-5	0.05	8.38e-5	0.14	1.41e-4	0.09
870.47	2.71e-5	0.04	2.43e-5	0.12	5.14e-5	0.06
970.47	1.48e-5	0.06	1.15e-5	0.27	2.62e-5	0.12
1070.47	8.36e-6	0.08	4.44e-6	0.11	1.28e-5	0.06

TABLE A7A.7-2
DOSE RATES AS A FUNCTION OF DISTANCE FROM THE ISFSI
(PAGE 2 OF 2)

From ISFSI Corners

Distance from the ISFSI Center (meters)	Gamma Radiation		Neutron Radiation		Total, Gamma+Neutron, Radiation	
	Dose Rate Value, mrem/hr	Dose Rate Relative Error	Dose Rate Value, mrem/hr	Dose Rate Relative Error	Dose Rate Value, mrem/hr	Dose Rate Relative Error
77.91	3.67	0.01	5.13	0.03	8.80	0.02
107.91	0.50	0.01	0.80	0.02	1.30	0.01
159.24	0.04	0.01	0.12	0.01	0.15	0.01
256.49	0.01	0.01	0.02	0.02	0.03	0.01
355.27	0.003	0.02	0.01	0.04	0.01	0.03
454.58	0.001	0.02	0.002	0.03	0.003	0.02
554.14	4.53e-4	0.02	6.67e-4	0.06	1.12e-3	0.04
653.84	1.94e-4	0.03	2.37e-4	0.07	4.31e-4	0.04
753.61	9.07e-5	0.04	8.48e-5	0.09	1.75e-4	0.05
853.44	4.36e-5	0.03	3.94e-5	0.14	8.30e-5	0.07
953.31	3.95e-5	0.38	1.17e-5	0.10	5.12e-5	0.29
1053.20	1.31e-5	0.04	5.59e-6	0.10	1.87e-5	0.04

TABLE A7A.7-3
SKYSHINE DOSE RATES AS A FUNCTION OF DISTANCE FROM THE ISFSI
(PAGE 1 OF 2)

From the ISFSI "North\South" Faces

Distance from the ISFSI Center (meters)	Gamma Radiation		Neutron Radiation		Total Skyshine, Gamma+Neutron, Radiation	
	Dose Rate Value, mrem/hr	Dose Rate Relative Error	Dose Rate Value, mrem/hr	Dose Rate Relative Error	Dose Rate Value, mrem/hr	Dose Rate Relative Error
4.03	4.77	0.02	6.94	0.04	11.71	0.02
14.03	3.08	0.02	4.84	0.03	7.93	0.02
49.03	0.94	0.01	1.56	0.02	2.50	0.02
104.03	0.06	0.01	0.22	0.02	0.27	0.02
204.03	0.01	0.01	0.04	0.03	0.06	0.02
304.03	0.004	0.02	0.010	0.04	0.015	0.03
404.03	0.001	0.02	0.003	0.05	0.004	0.03
504.03	5.77e-4	0.04	9.06e-4	0.05	1.48e-3	0.03
604.03	2.27e-4	0.04	3.24e-4	0.09	5.51e-4	0.05
704.03	1.29e-4	0.20	1.30e-4	0.11	2.59e-4	0.11
804.03	5.48e-5	0.08	6.02e-5	0.24	1.15e-4	0.13
904.03	2.46e-5	0.06	1.95e-5	0.12	4.41e-5	0.06
1004.03	1.52e-5	0.11	9.21e-6	0.15	2.44e-5	0.09

From the ISFSI "East\West" Faces

Distance from the ISFSI Center (meters)	Gamma Radiation		Neutron Radiation		Total Skyshine, Gamma+Neutron, Radiation	
	Dose Rate Value, mrem/hr	Dose Rate Relative Error	Dose Rate Value, mrem/hr	Dose Rate Relative Error	Dose Rate Value, mrem/hr	Dose Rate Relative Error
70.47	28.19	0.04	28.71	0.04	56.902	0.03
80.47	2.38	0.03	4.43	0.04	6.812	0.03
115.47	0.05	0.01	0.25	0.02	0.297	0.02
170.47	0.03	0.01	0.10	0.02	0.127	0.02
270.47	0.01	0.02	0.02	0.02	0.027	0.02
370.47	0.002	0.02	0.005	0.05	0.007	0.04
470.47	0.001	0.04	0.002	0.06	0.002	0.04
570.47	2.72e-4	0.03	4.77e-4	0.06	7.49e-4	0.04
670.47	1.10e-4	0.04	2.33e-4	0.12	3.43e-4	0.08
770.47	4.97e-5	0.06	8.38e-5	0.14	1.34e-4	0.09
870.47	2.32e-5	0.04	2.43e-5	0.12	4.75e-5	0.06
970.47	1.23e-5	0.07	1.15e-5	0.27	2.38e-5	0.13
1070.47	6.99e-6	0.09	4.44e-6	0.11	1.14e-5	0.07

TABLE A7A.7-3
SKYSHINE DOSE RATES AS A FUNCTION OF DISTANCE FROM THE ISFSI
(PAGE 2 OF 2)

From ISFSI Corners

Distance from the ISFSI Center (meters)	Gamma Radiation		Neutron Radiation		Total Skyshine, Gamma+Neutron, Radiation	
	Dose Rate Value, mrem/hr	Dose Rate Relative Error	Dose Rate Value, mrem/hr	Dose Rate Relative Error	Dose Rate Value, mrem/hr	Dose Rate Relative Error
77.91	3.15	0.02	5.12	0.03	8.28	0.02
107.91	0.43	0.01	0.80	0.02	1.23	0.01
159.24	0.03	0.01	0.12	0.01	0.15	0.01
256.49	0.01	0.01	0.02	0.02	0.03	0.01
355.27	0.003	0.02	0.006	0.04	0.009	0.03
454.58	0.001	0.02	0.002	0.03	0.003	0.02
554.14	4.13e-4	0.02	6.67e-4	0.06	1.08e-3	0.04
653.84	1.76e-4	0.03	2.37e-4	0.07	4.14e-4	0.04
753.61	8.24e-5	0.04	8.48e-5	0.09	1.67e-4	0.05
853.44	3.91e-5	0.03	3.94e-5	0.14	7.85e-5	0.07
953.31	3.69e-5	0.40	1.17e-5	0.10	4.86e-5	0.31
1053.20	1.14e-5	0.05	5.59e-6	0.10	1.70e-5	0.05

TABLE A7A.8-1
TN-40HT RELEASABLE SOURCE TERM FOR OFF-NORMAL CONDITIONS – DESIGN BASIS 14X14 FUEL

Isotope	Activity (Ci/assembly)	Release Fraction	Concentration in Void Space of TN-40HT[1] (Ci/cm^3)	Material Released[2] Q (µCi/sec)
H 3	1.78E+02	0.30	3.80E-05	5.76E-04
Co60[(3)]	6.73E+00	1.50E-01	7.18E-06	1.09E-04
Pu238	3.02E+03	3.00E-06	6.44E-09	9.78E-08
Pu239	1.35E+02	3.00E-06	2.88E-10	4.37E-09
Pu240	2.67E+02	3.00E-06	5.70E-10	8.65E-09
Pu241	3.19E+04	3.00E-06	6.81E-08	1.03E-06
Am241	1.50E+03	3.00E-06	3.20E-09	4.86E-08
Am243	4.17E+01	3.00E-06	8.90E-11	1.35E-09
Cm244	5.28E+03	3.00E-06	1.13E-08	1.71E-07
Kr 85	1.78E+03	0.30	3.80E-04	5.77E-03
Sr 90	3.11E+04	2.00E-04	4.42E-06	6.72E-05
Y 90	3.11E+04	3.00E-06	6.64E-08	1.01E-06
I129	2.40E-02	0.30	5.12E-09	7.77E-08
Cs134	4.01E+02	2.00E-04	5.70E-08	8.66E-07
Cs137	5.27E+04	2.00E-04	7.50E-06	1.14E-04
Ba137m	4.97E+04	3.00E-06	1.06E-07	1.61E-06
Pm147	6.53E+02	3.00E-06	1.39E-09	2.12E-08
Eu154	1.33E+03	3.00E-06	2.84E-09	4.31E-08
Np239	4.17E+01	3.00E-06	8.90E-11	1.35E-09

1. Values are based on 10% failure of the fuel rods and cask free volume of 5.63 m^3.

2. Values are based on 1.518E-05 cm^3/sec helium leak from containment.

3. The Co-60 source is calculated using the methodology of Reference (Reference 8). It is based on a 14x14 PWR fuel assembly with surface area of 1300 cm^2/rod and a crud surface concentration of 140µCi /cm^2 at the time of discharge. (The value listed above includes a minimum cooling time of twelve years.)

Table A7A.8-2
TN-40HT RELEASABLE SOURCE TERM FOR ACCIDENT CONDITIONS – DESIGN BASIS 14X14 FUEL

Isotope	Activity (Ci/assembly)	Release Fraction	Concentration in Void Space of TN-40HT[1] (Ci/cm^3)	Material Released[2] Q (µCi/sec)
H3	1.78E+02	0.30	3.80E-04	1.41E-02
Co60[3]	6.73+00	1.00E-00	4.79E-05	1.78E-03
Pu238	3.02E+03	3.00E-06	6.44E-08	2.40E-06
Pu239	1.35E+02	3.00E-06	2.88E-09	1.07E-07
Pu240	2.67E+02	3.00E-06	5.70E-09	2.12E-07
Pu241	3.19E+04	3.00E-06	6.81E-07	2.54E-05
Am241	1.50E+03	3.00E-06	3.20E-08	1.19E-06
Am243	4.17E+01	3.00E-06	8.90E-10	3.31E-08
Cm244	5.28E+03	3.00E-06	1.13E-07	4.20E-06
Kr85	1.78E+03	0.30	3.80E-03	1.41E-01
Sr90	3.11E+04	2.00E-04	4.42E-05	1.65E-03
Y90	3.11E+04	3.00E-06	6.64E-07	2.47E-05
I129	2.40E-02	0.30	5.12E-08	1.91E-06
Cs134	4.01E+02	2.00E-04	5.70E-07	2.12E-05
Cs137	5.27E+04	2.00E-04	7.50E-05	2.79E-03
Ba137m	4.97E+04	3.00E-06	1.06E-06	3.95E-05
Pm147	6.53E+02	3.00E-06	1.39E-08	5.19E-07
Eu154	1.33E+03	3.00E-06	2.84E-08	1.06E-06
Np239	4.17E+01	3.00E-06	8.90E-10	3.31E-08

1. Values are based on 100% failure of the fuel rods and cask free volume of 5.63 m^3.

2. Values are based on 3.72E-05 cm^3/sec helium leak from containment.

3. The Co-60 source is calculated using the methodology of Reference (Reference 8). It is based on a 14x14 PWR fuel assembly with surface area of 1300 cm^2/rod and a crud surface concentration of 140 µCi / cm^2 at the time of discharge. (The value listed above includes a minimum cooling time of twelve years.)

TABLE A7A.8-3
OFF-SITE AIRBORNE DOSES FROM OFF-NORMAL CONDITIONS AT 110 M (INTERNAL + EXTERNAL)

Design Basis 14x14 Fuel, Committed Doses (Internal) + Deep Dose (External)
mrem for 45 days

Isotope	Gonad	Breast	Lung	R. Marrow	B. Surface	Thyroid	Remainder	Effective	Skin
H3	4.68E-05	4.68E-05	4.69E-05	4.68E-05	4.68E-05	4.68E-05	4.68E-05	4.68E-05	0.00E+00
Co60	2.69E-03	9.71E-03	1.77E-01	9.06E-03	7.28E-03	8.56E-03	1.87E-02	3.05E-02	2.93E-04
Pu238	1.29E-02	4.60E-07	1.47E-01	6.99E-02	8.73E-01	4.42E-07	3.23E-02	4.87E-02	7.40E-11
Pu239	6.53E-04	1.89E-08	6.64E-03	3.47E-03	4.34E-02	1.86E-08	1.55E-03	2.38E-03	1.51E-12
Pu240	1.29E-03	3.87E-08	1.31E-02	6.87E-03	8.58E-02	3.68E-08	3.07E-03	4.71E-03	6.27E-12
Pu241	3.31E-03	1.49E-07	1.54E-02	1.63E-02	2.04E-01	6.02E-08	6.36E-03	1.08E-02	2.24E-12
Am241	7.42E-03	6.11E-07	4.20E-03	3.97E-02	4.95E-01	3.66E-07	1.79E-02	2.74E-02	1.15E-09
Am243	2.07E-04	9.65E-08	1.13E-04	1.10E-03	1.38E-02	5.27E-08	4.91E-04	7.55E-04	6.87E-11
Cm244	1.28E-02	8.36E-07	1.55E-02	7.54E-02	9.40E-01	8.12E-07	3.84E-02	5.38E-02	1.24E-10
Kr85	1.25E-05	1.43E-05	1.22E-05	1.16E-05	2.35E-05	1.26E-05	1.16E-05	1.27E-05	1.41E-03
Sr90	8.33E-04	8.33E-04	1.18E-03	1.06E-01	2.29E-01	8.33E-04	1.81E-03	1.11E-01	1.14E-05
Y90	4.86E-08	4.92E-08	4.41E-05	1.32E-06	1.32E-06	4.86E-08	1.83E-05	1.08E-05	1.16E-06
I129	3.24E-08	7.73E-08	1.15E-07	5.14E-08	5.20E-08	5.70E-04	4.34E-08	1.71E-05	1.58E-09
Cs134	5.41E-05	4.53E-05	4.92E-05	4.92E-05	4.67E-05	4.64E-05	5.77E-05	5.21E-05	1.51E-06
Cs137	4.68E-03	4.19E-03	4.72E-03	4.44E-03	4.25E-03	4.24E-03	4.88E-03	4.62E-03	1.82E-05
Ba137m	8.40E-07	9.59E-07	8.34E-07	8.13E-07	1.38E-06	8.58E-07	7.98E-07	8.58E-07	1.11E-06
Pm147	2.16E-12	3.95E-12	7.69E-06	8.11E-07	1.01E-05	2.23E-12	5.85E-07	1.05E-06	3.17E-10
Eu154	2.42E-06	3.19E-06	1.61E-05	2.15E-05	1.06E-04	1.49E-06	2.29E-05	1.57E-05	6.61E-08
Np237	6.61E-10	3.22E-10	1.52E-08	1.48E-09	1.34E-08	2.36E-10	6.26E-09	4.50E-09	4.00E-10
Total	4.69E-02	1.48E-02	3.85E-01	3.32E-01	2.90E+00	1.43E-02	1.26E-01	2.95E-01	1.73E-03

TABLE A7A.8-4
OFF-SITE AIRBORNE DOSES FROM OFF-NORMAL CONDITIONS AT 110 M (EXTERNAL)

Design Basis14x14 Fuel, Deep Doses (External)
mrem for 45 days

Isotope	Gonad	Breast	Lung	R. Marrow	B. Surface	Thyroid	Remainder	Effective	Skin
H3	0.00E+00	0.00E+00	2.93E-08	0.00E+00	0.00E+00	0.00E+00	0.00E+00	3.53E-09	0.00E+00
Co60	2.48E-04	2.81E-04	2.50E-04	2.48E-04	3.59E-04	2.56E-04	2.42E-04	2.54E-04	2.93E-04
Pu238	1.19E-11	2.30E-11	1.92E-12	3.04E-12	1.68E-11	7.26E-12	3.60E-12	8.83E-12	7.40E-11
Pu239	3.92E-13	6.11E-13	2.14E-13	2.16E-13	7.66E-13	3.14E-13	2.31E-13	3.43E-13	1.51E-12
Pu240	1.02E-12	1.97E-12	1.74E-13	2.64E-13	1.48E-12	6.27E-13	3.14E-13	7.60E-13	6.27E-12
Pu241	1.37E-12	1.66E-12	1.24E-12	1.08E-12	4.19E-12	1.33E-12	1.16E-12	1.39E-12	2.24E-12
Am241	7.72E-10	9.62E-10	6.06E-09	4.68E-10	2.58E-09	7.04E-10	5.70E-10	7.36E-10	1.15E-09
Am243	5.47E-11	6.52E-11	4.80E-11	3.87E-11	1.87E-10	5.22E-11	4.47E-11	5.45E-11	6.87E-11
Cm244	2.18E-11	4.21E-11	2.24E-12	4.62E-12	2.79E-11	1.33E-11	5.73E-12	1.55E-11	1.24E-10
Kr85	1.25E-05	1.43E-05	1.22E-05	1.16E-05	2.35E-05	1.26E-05	1.16E-05	1.27E-05	1.41E-03
Sr90	9.67E-09	1.18E-08	8.00E-09	6.76E-09	2.83E-08	9.11E-09	7.59E-09	9.36E-09	1.14E-05
Y90	3.52E-09	4.10E-09	3.30E-09	3.02E-09	8.28E-09	3.49E-09	3.13E-09	3.54E-09	1.16E-06
I129	6.95E-10	9.58E-10	3.08E-10	2.36E-10	1.58E-09	5.55E-10	3.31E-10	5.47E-10	1.58E-09
Cs134	1.19E-06	1.35E-06	1.18E-06	1.15E-06	1.92E-06	1.21E-06	1.13E-06	1.21E-06	1.51E-06
Cs137	1.68E-08	2.04E-08	1.41E-08	1.20E-08	4.82E-08	1.59E-08	1.34E-08	1.63E-08	1.82E-05
Ba137m	8.40E-07	9.59E-07	8.34E-07	8.13E-07	1.38E-06	8.58E-07	7.98E-07	8.58E-07	1.11E-06
Pm147	2.93E-13	3.74E-13	2.13E-13	1.75E-13	8.53E-13	2.64E-13	2.06E-13	2.71E-13	3.17E-10
Eu154	4.78E-08	5.43E-08	4.78E-08	4.68E-08	7.52E-08	4.90E-08	4.58E-08	4.90E-08	6.61E-08
Np237	1.88E-10	2.18E-10	1.79E-10	1.62E-10	5.00E-10	1.88E-10	1.69E-10	1.92E-10	4.00E-10
Total	2.63E-04	2.97E-04	2.65E-04	2.62E-04	3.86E-04	2.71E-04	2.56E-04	2.69E-04	1.73E-03

TABLEA7A.8-5
OFF-SITE AIRBORNE DOSES FROM ACCIDENT CONDITIONS AT 110 M (INTERNAL)

Design Basis 14x14 Fuel, mrem/30 Days, Committed Doses (Internal)

Isotope	Gonad	Breast	Lung	R. Marrow	B. Surface	Thyroid	Remainder	Effective
H3	3.95E-03	3.95E-03	3.95E-03	3.95E-03	3.95E-03	3.95E-03	3.95E-03	3.95E-03
Co60	1.37E-01	5.30E-01	9.94E+00	4.96E-01	3.89E-01	4.67E-01	1.04E+00	1.70E+00
Pu238	1.09E+00	3.88E-05	1.24E+01	5.89E+00	7.37E+01	3.73E-05	2.72E+00	4.11E+00
Pu239	5.51E-02	1.60E-06	5.60E-01	2.93E-01	3.66E+00	1.56E-06	1.31E-01	2.01E-01
Pu240	1.09E-01	3.26E-06	1.11E+00	5.79E-01	7.23E+00	3.10E-06	2.59E-01	3.98E-01
Pu241	2.79E-01	1.25E-05	1.30E+00	1.38E+00	1.72E+01	5.08E-06	5.36E-01	9.13E-01
Am241	6.26E-01	5.14E-05	3.54E-01	3.35E+00	4.18E+01	3.08E-05	1.51E+00	2.31E+00
Am243	1.75E-02	8.14E-06	9.53E-03	9.26E-02	1.16E+00	4.44E-06	4.14E-02	6.37E-02
Cm244	1.08E+00	7.05E-05	1.31E+00	6.36E+00	7.93E+01	6.85E-05	3.24E+00	4.54E+00
Kr85	0.00E+00	0.00E+00	0.00E+00	0.00E+00	0.00E+00	0.00E+00	0.00E+00	0.00E+00
Sr90	7.03E-02	7.03E-02	9.93E-02	8.94E+00	1.93E+01	7.03E-02	1.53E-01	9.34E+00
Y90	3.80E-06	3.80E-06	3.72E-03	1.11E-04	1.11E-04	3.80E-06	1.54E-03	9.10E-04
I129	2.68E-06	6.44E-06	9.67E-06	4.31E-06	4.25E-06	4.81E-02	3.64E-06	1.44E-03
Cs134	4.46E-03	3.71E-03	4.05E-03	4.05E-03	3.77E-03	3.81E-03	4.77E-03	4.29E-03
Cs137	3.95E-01	3.54E-01	3.98E-01	3.74E-01	3.58E-01	3.58E-01	4.11E-01	3.89E-01
Ba137m	0.00E+00	0.00E+00	0.00E+00	0.00E+00	0.00E+00	0.00E+00	0.00E+00	0.00E+00
Pm147	1.58E-10	3.02E-10	6.49E-04	6.84E-05	8.55E-04	1.66E-10	4.94E-05	8.89E-05
Eu154	2.00E-04	2.65E-04	1.35E-03	1.81E-03	8.93E-03	1.22E-04	1.93E-03	1.32E-03
Np237	3.99E-08	8.73E-09	1.26E-06	1.11E-07	1.09E-06	4.08E-09	5.13E-07	3.63E-07
Total	3.86E+00	9.62E-01	2.75E+01	2.78E+01	2.44E+02	9.51E-01	1.00E+01	2.40E+01

TABLE A7A.8-6
OFF-SITE AIRBORNE DOSES FROM ACCIDENT CONDITIONS AT 110 M (EXTERNAL)

Design Basis 14x14 Fuel, mrem/30 Days, Deep Doses (External)

	Gonad	Breast	Lung	R. Marrow	B. Surface	Thyroid	Remainder	Effective	Skin
H3	0.00E+00	0.00E+00	2.47E-06	0.00E+00	0.00E+00	0.00E+00	0.00E+00	2.98E-07	0.00E+00
Co60	1.40E-02	1.58E-02	1.41E-02	1.40E-02	2.02E-02	1.44E-02	1.36E-02	1.43E-02	1.65E-02
Pu238	1.00E-09	1.94E-09	1.62E-10	2.56E-10	1.42E-09	6.12E-10	3.04E-10	7.45E-10	6.24E-09
Pu239	3.30E-11	5.15E-11	1.81E-11	1.82E-11	6.46E-11	2.65E-11	1.95E-11	2.89E-11	1.27E-10
Pu240	8.58E-11	1.66E-10	1.47E-11	2.23E-11	1.25E-10	5.29E-11	2.65E-11	6.41E-11	5.29E-10
Pu241	1.16E-10	1.40E-10	1.05E-10	9.08E-11	3.53E-10	1.13E-10	9.82E-11	1.17E-10	1.89E-10
Am241	6.51E-08	8.11E-08	5.11E-07	3.95E-08	2.18E-07	5.94E-08	4.81E-08	6.20E-08	9.71E-08
Am243	4.62E-09	5.50E-09	4.05E-09	3.27E-09	1.57E-08	4.41E-09	3.77E-09	4.60E-09	5.80E-09
Cm243	1.84E-09	3.55E-09	1.89E-10	3.90E-10	2.35E-09	1.12E-09	4.83E-10	1.31E-09	1.04E-08
Kr85	1.05E-03	1.21E-03	1.03E-03	9.81E-04	1.98E-03	1.06E-03	9.81E-04	1.07E-03	1.19E-01
Sr90	8.15E-07	9.95E-07	6.75E-07	5.70E-07	2.39E-06	7.68E-07	6.40E-07	7.89E-07	9.64E-04
Y90	2.97E-07	3.46E-07	2.78E-07	2.55E-07	6.98E-07	2.94E-07	2.64E-07	2.99E-07	9.81E-05
I129	5.86E-08	8.08E-08	2.60E-08	1.99E-08	1.33E-07	4.68E-08	2.79E-08	4.61E-08	1.33E-07
Cs134	1.00E-04	1.14E-04	9.96E-05	9.72E-05	1.62E-04	1.02E-04	9.54E-05	1.02E-04	1.28E-04
Cs137	1.41E-06	1.72E-06	1.19E-06	1.01E-06	4.07E-06	1.34E-06	1.13E-06	1.37E-06	1.53E-03
Ba137m	7.09E-05	8.09E-05	7.04E-05	6.86E-05	1.16E-04	7.24E-05	6.73E-05	7.24E-05	9.37E-05
Pm147	2.47E-11	3.16E-11	1.80E-11	1.47E-11	7.20E-11	2.23E-11	1.74E-11	2.29E-11	2.68E-08
Eu154	4.03E-06	4.58E-06	4.03E-06	3.95E-06	6.34E-06	4.14E-06	3.87E-06	4.13E-06	5.57E-06
Np237	1.59E-08	1.84E-08	1.51E-08	1.37E-08	4.22E-08	1.59E-08	1.43E-08	1.62E-08	3.37E-08
Total	1.52E-02	1.72E-02	1.53E-02	1.51E-02	2.25E-02	1.57E-02	1.48E-02	1.55E-02	1.38E-01

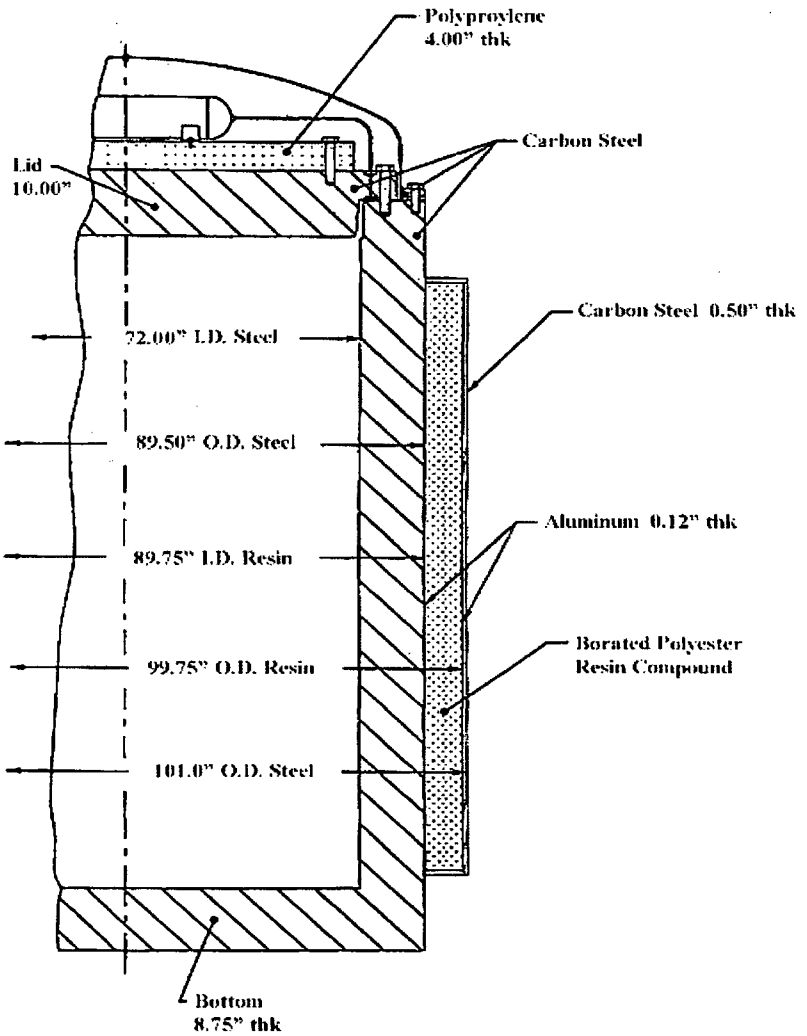

FIGURE A7A.1-1
TN-40HT CASK SHIELDING CONFIGURATION

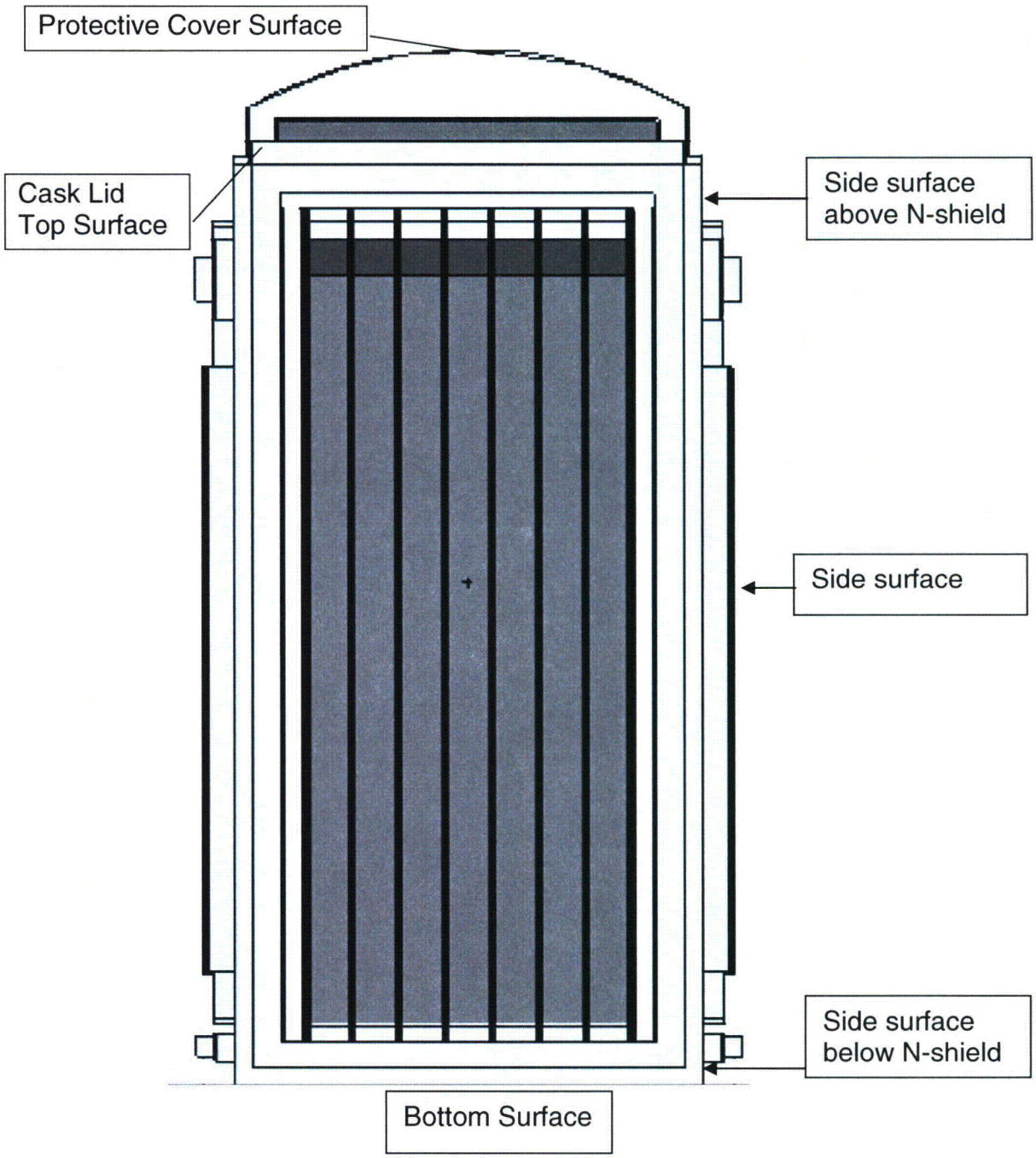

FIGURE A7A.2-1
TN-40HT NORMAL CONDITIONS DOSE POINT LOCATIONS

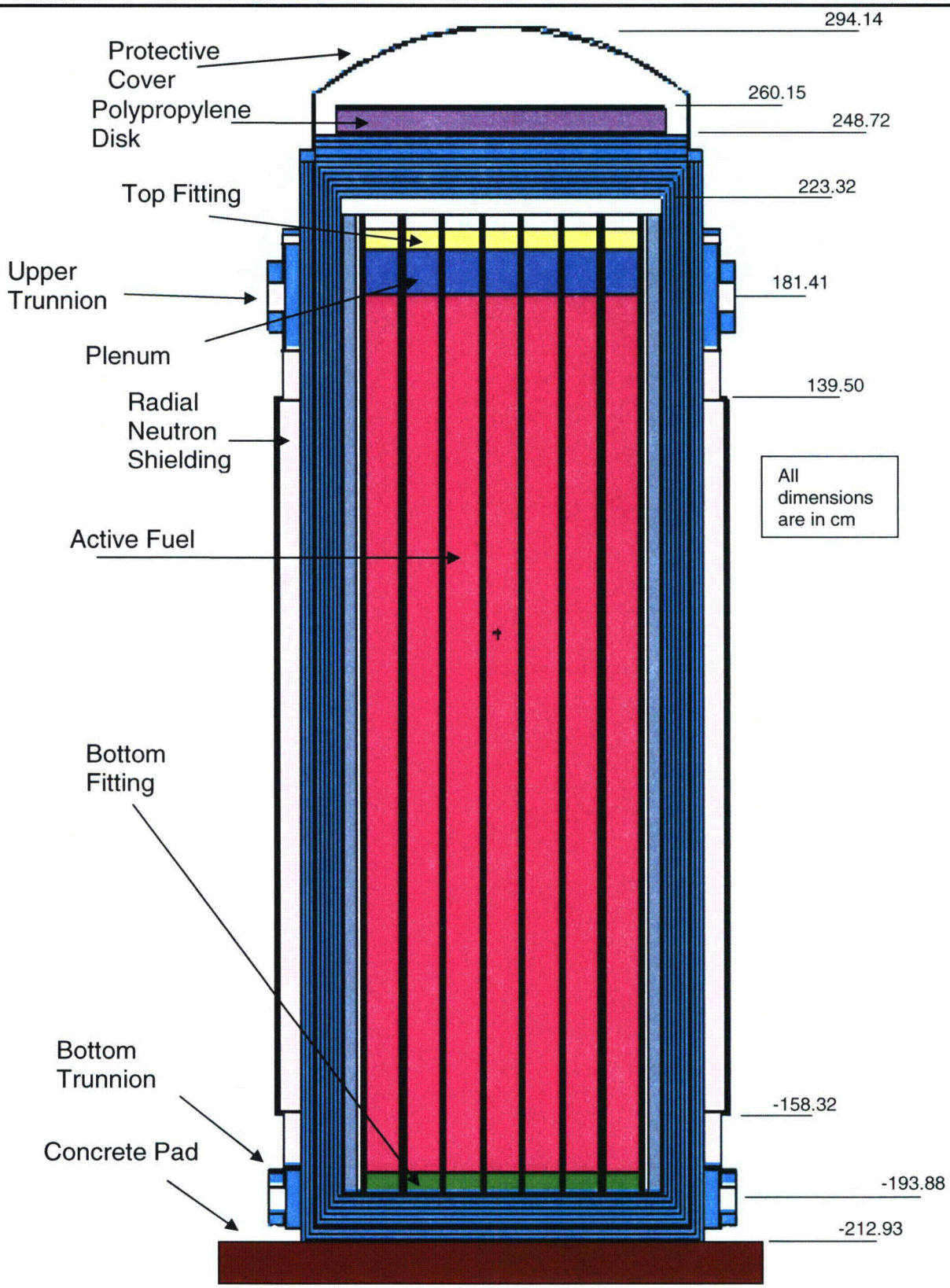

FIGURE A7A.4-1
TN-40HT MCNP GAMMA MODEL YZ PLOT

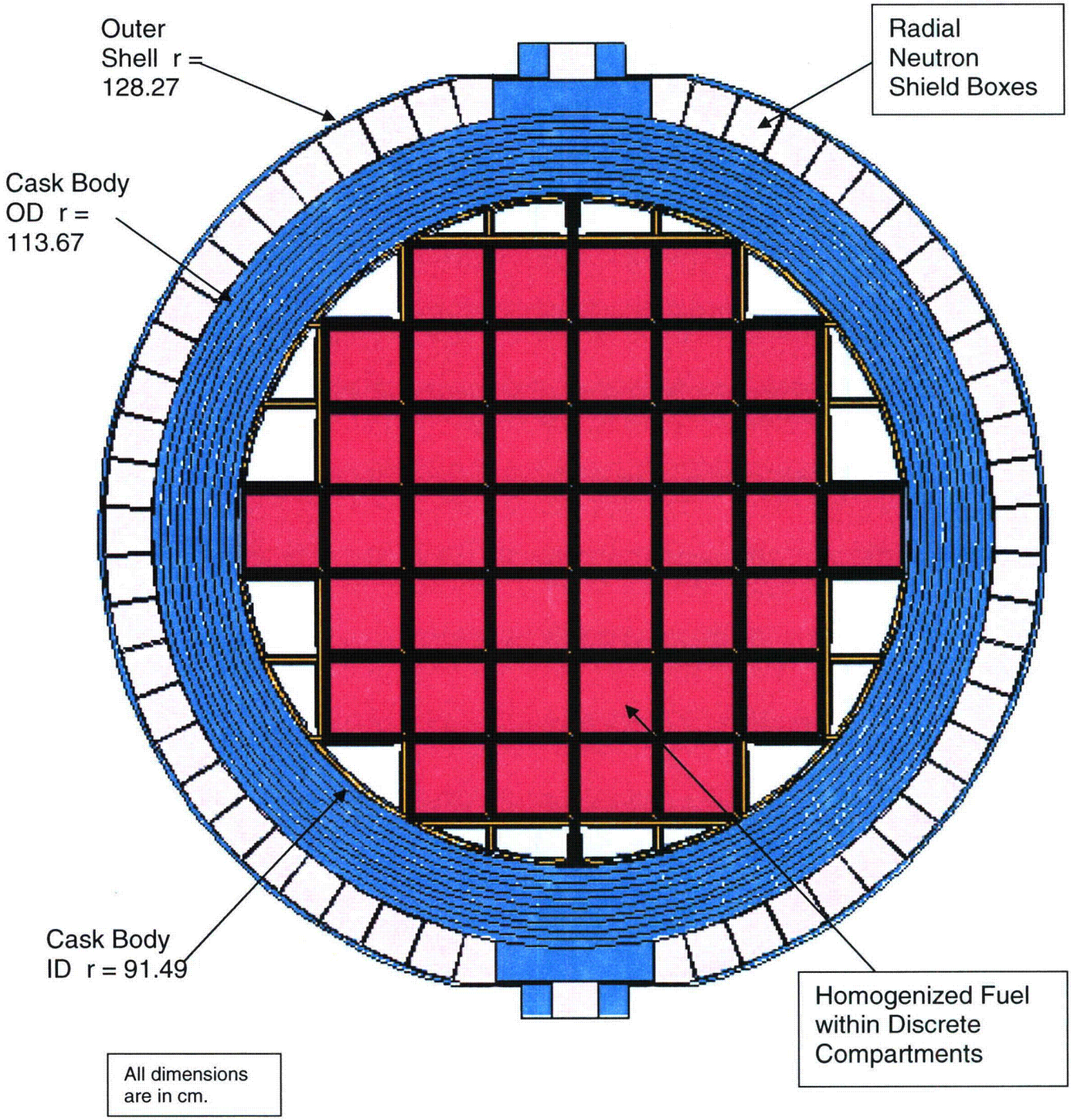

FIGURE A7A.4-2
TN-40HT MCNP GAMMA MODEL – XY PLOT AT Z=181 CM

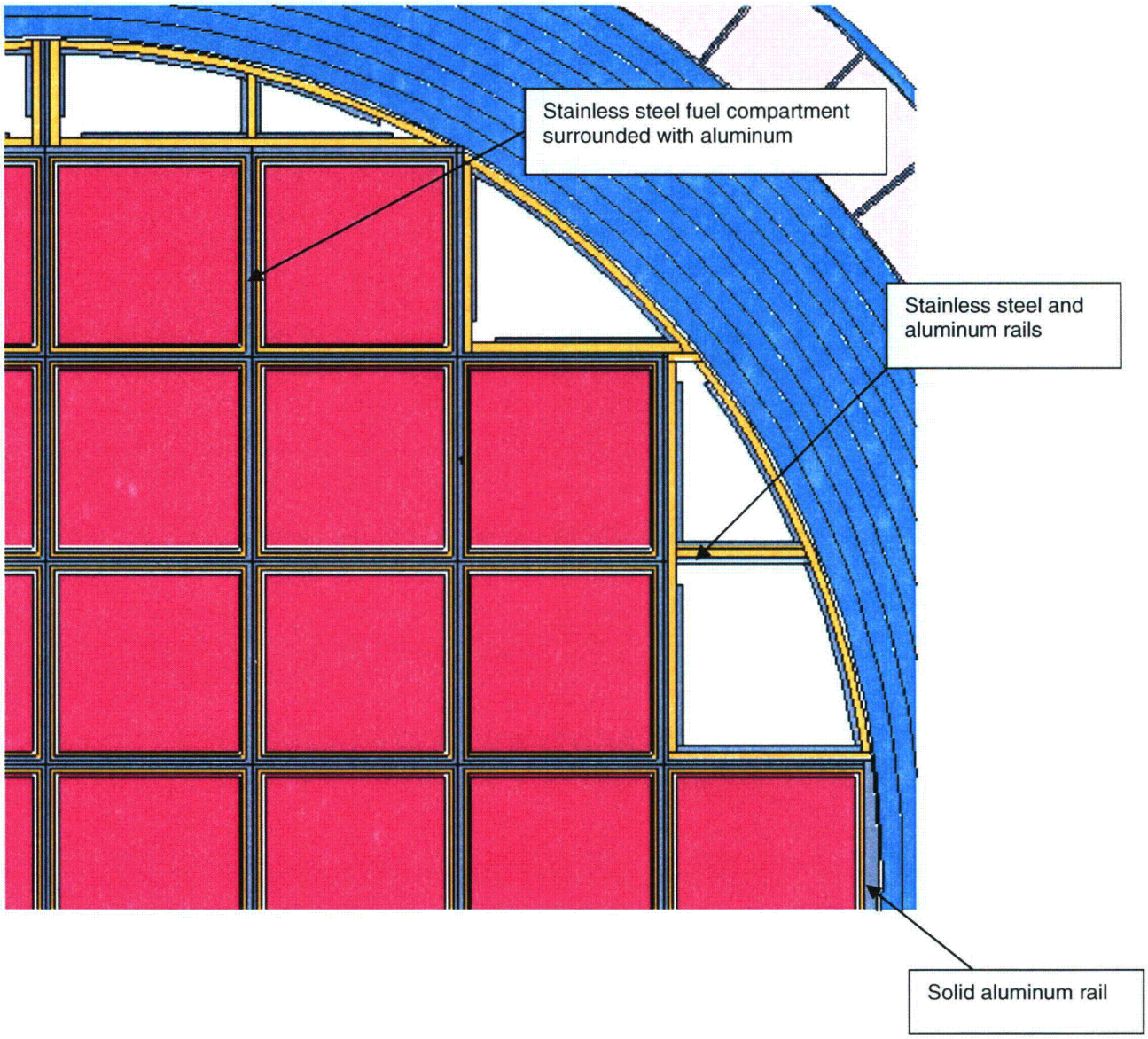

FIGURE A7A.4-3
TN-40HT MCNP QUARTER GAMMA MODEL – XY PLOT AT Z=0 CM

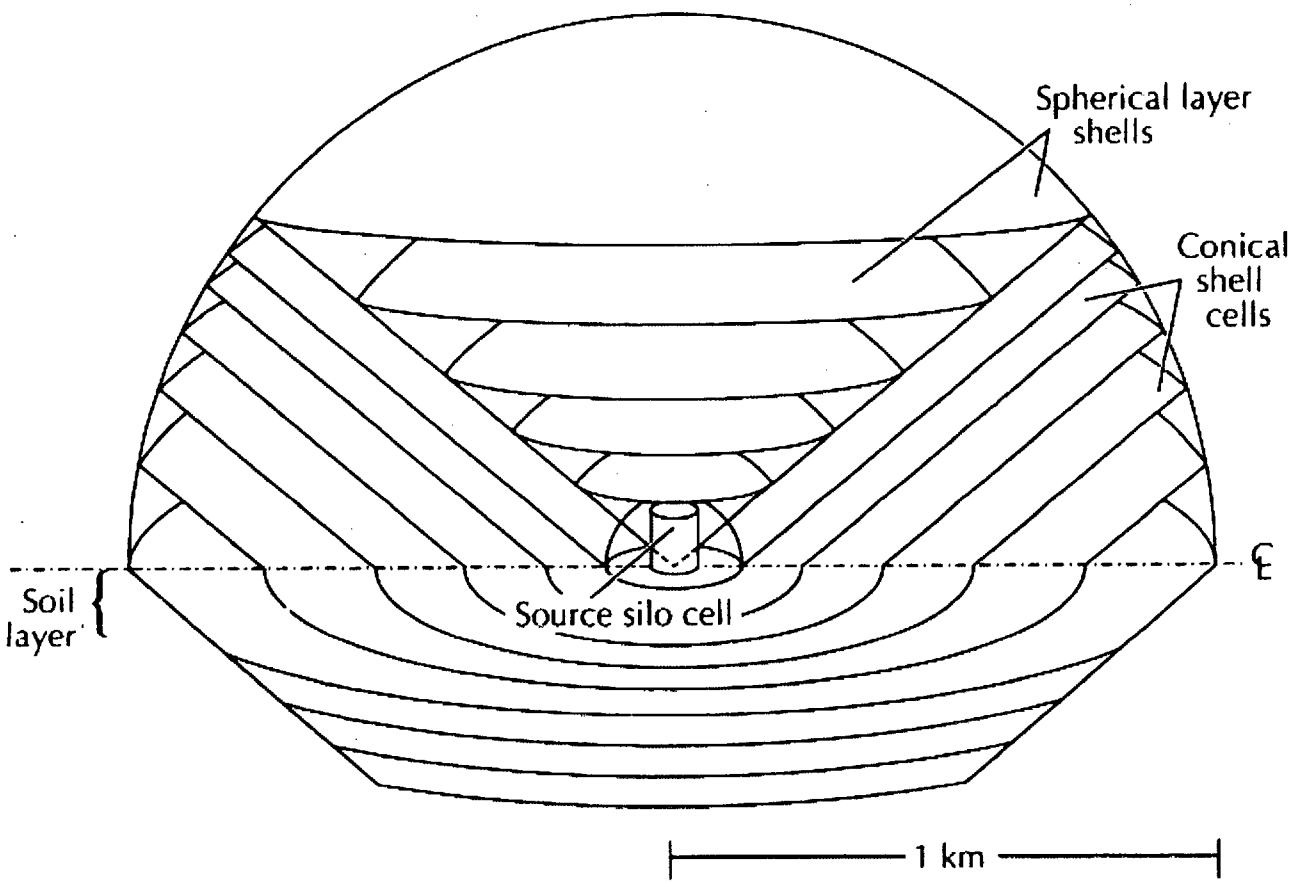

FIGURE A7A.4-4
TN-40HT FAR FIELD MCNP MODEL

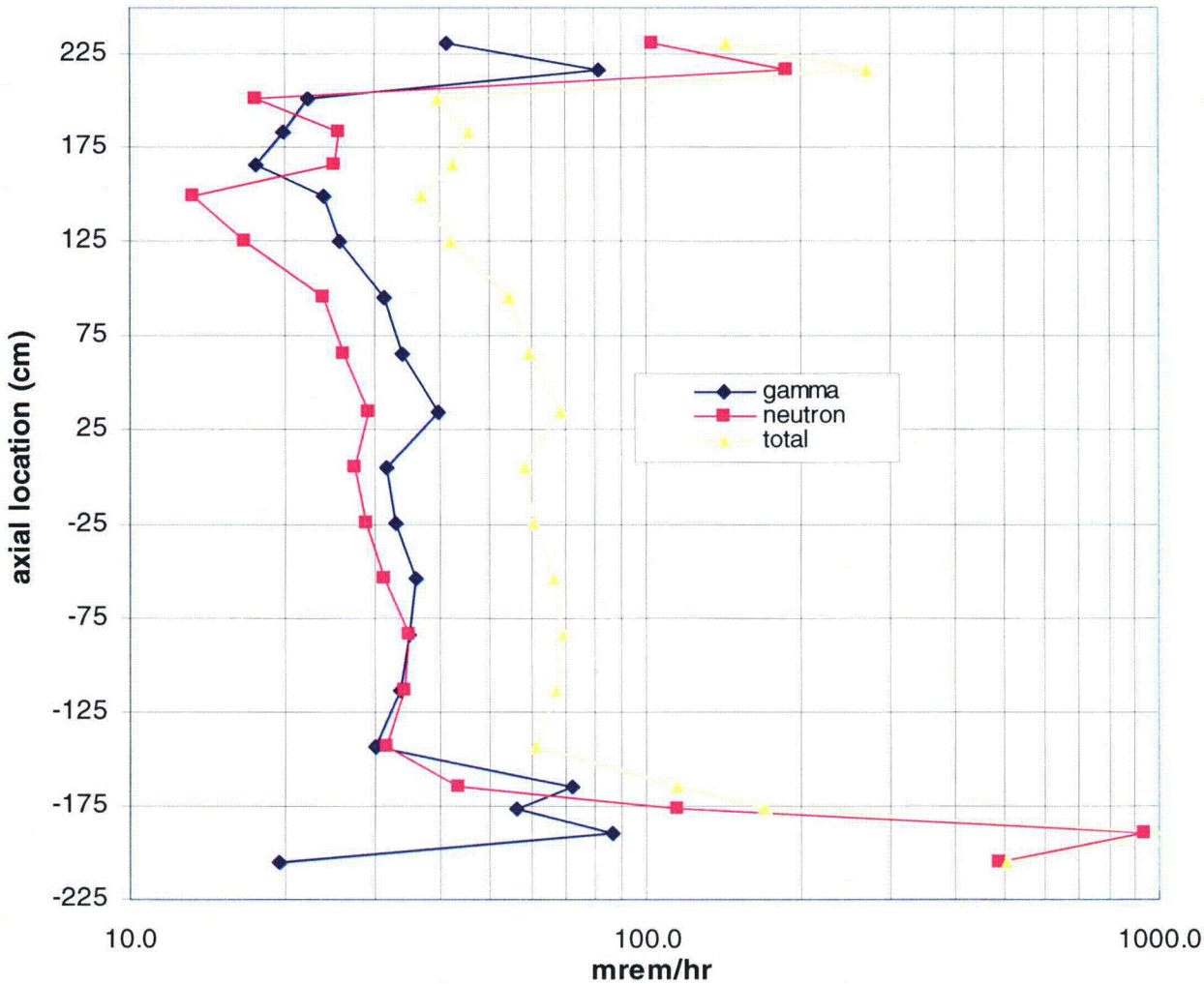

Note: 0.0 is the center line of the active fuel

FIGURE A7A.5-1
TN-40HT CASK SIDE SURFACE DOSE RATES
NORMAL AND OFF-NORMAL CONDITIONS

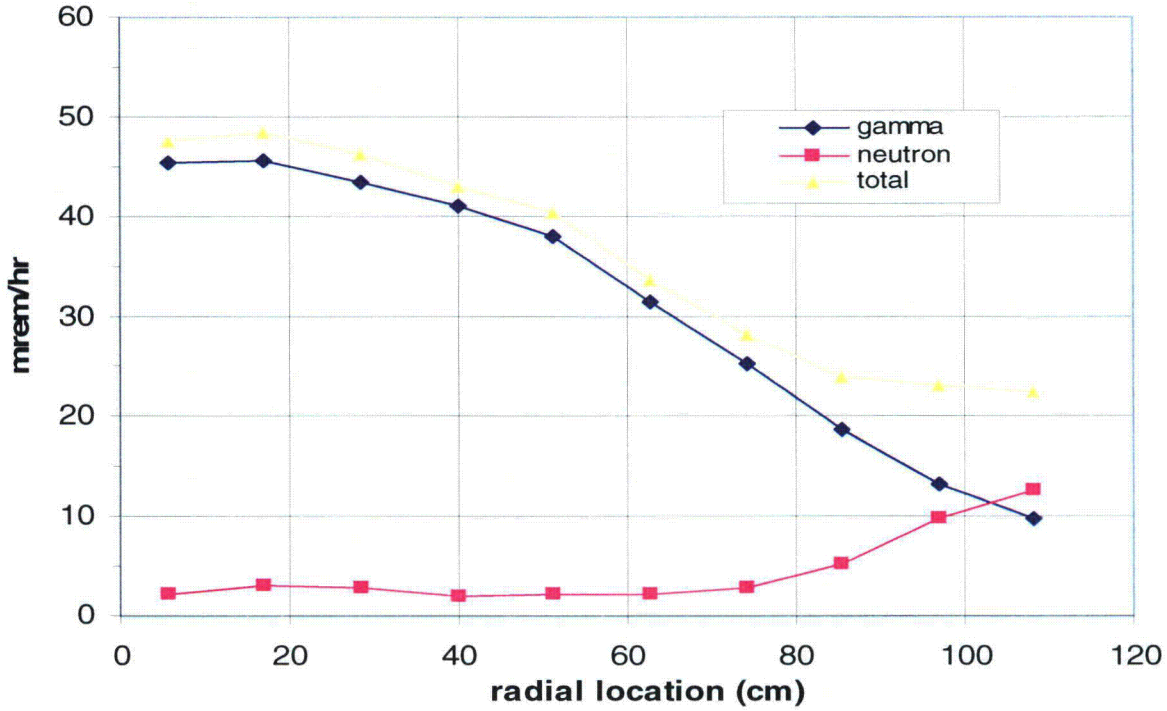

FIGURE A7A.5-2
TN-40HT CASK PROTECTIVE COVER SURFACE DOSE RATES
NORMAL AND OFF-NORMAL CONDITIONS

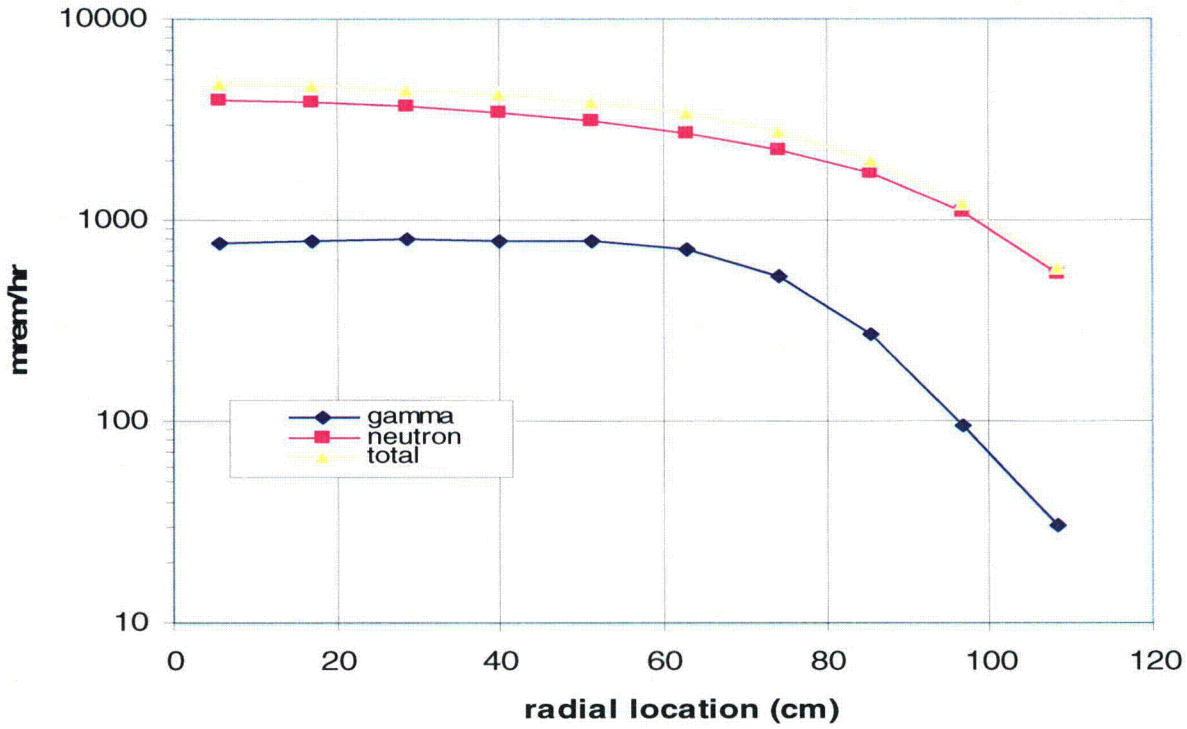

FIGURE A7A.5-3
TN-40HT CASK BOTTOM SURFACE DOSE RATES
NORMAL AND OFF-NORMAL CONDITIONS

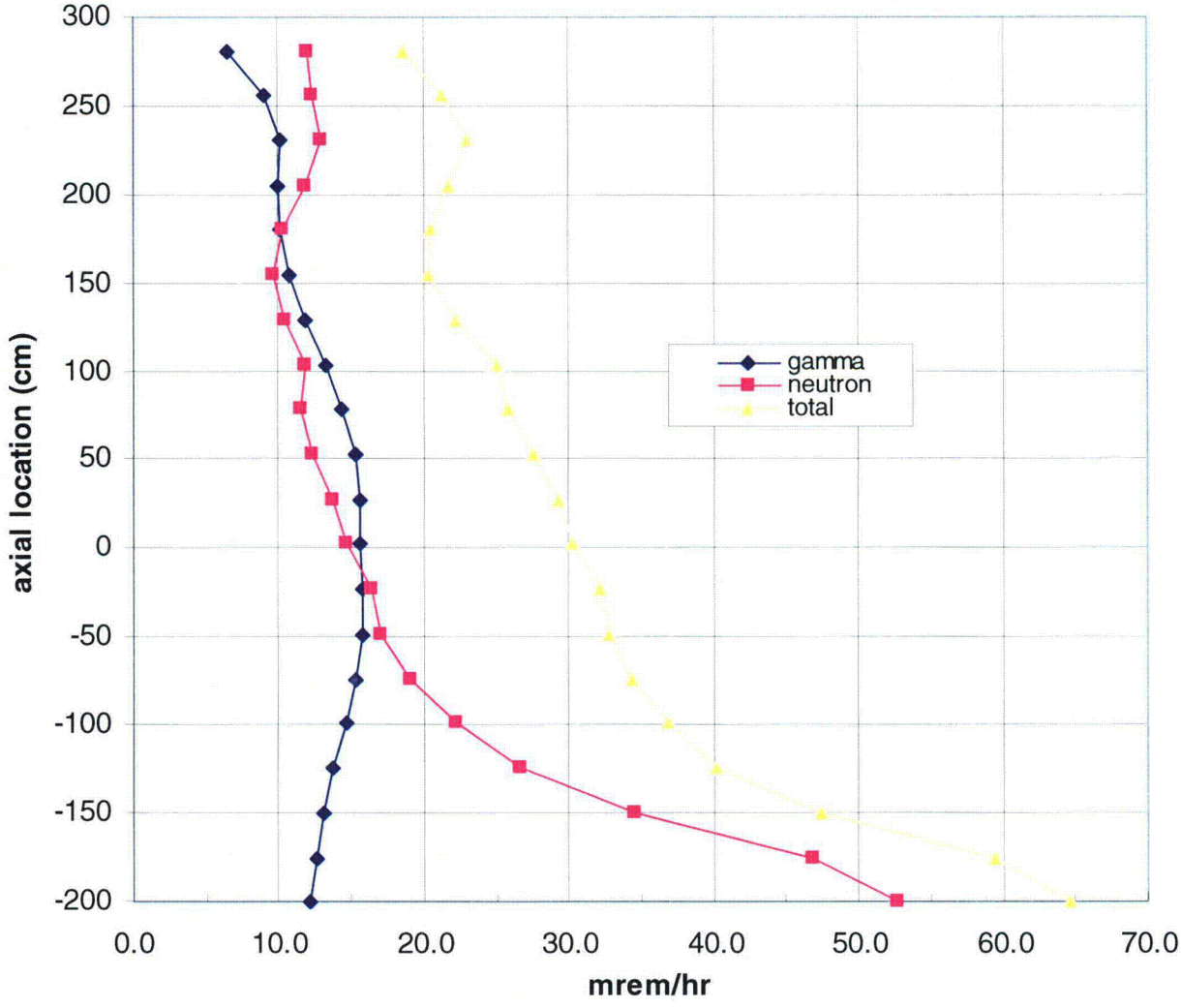

FIGURE A7A.5-4
TN-40HT CASK DOSE RATES 1 M FROM SIDE SURFACE
NORMAL AND OFF-NORMAL CONDITIONS

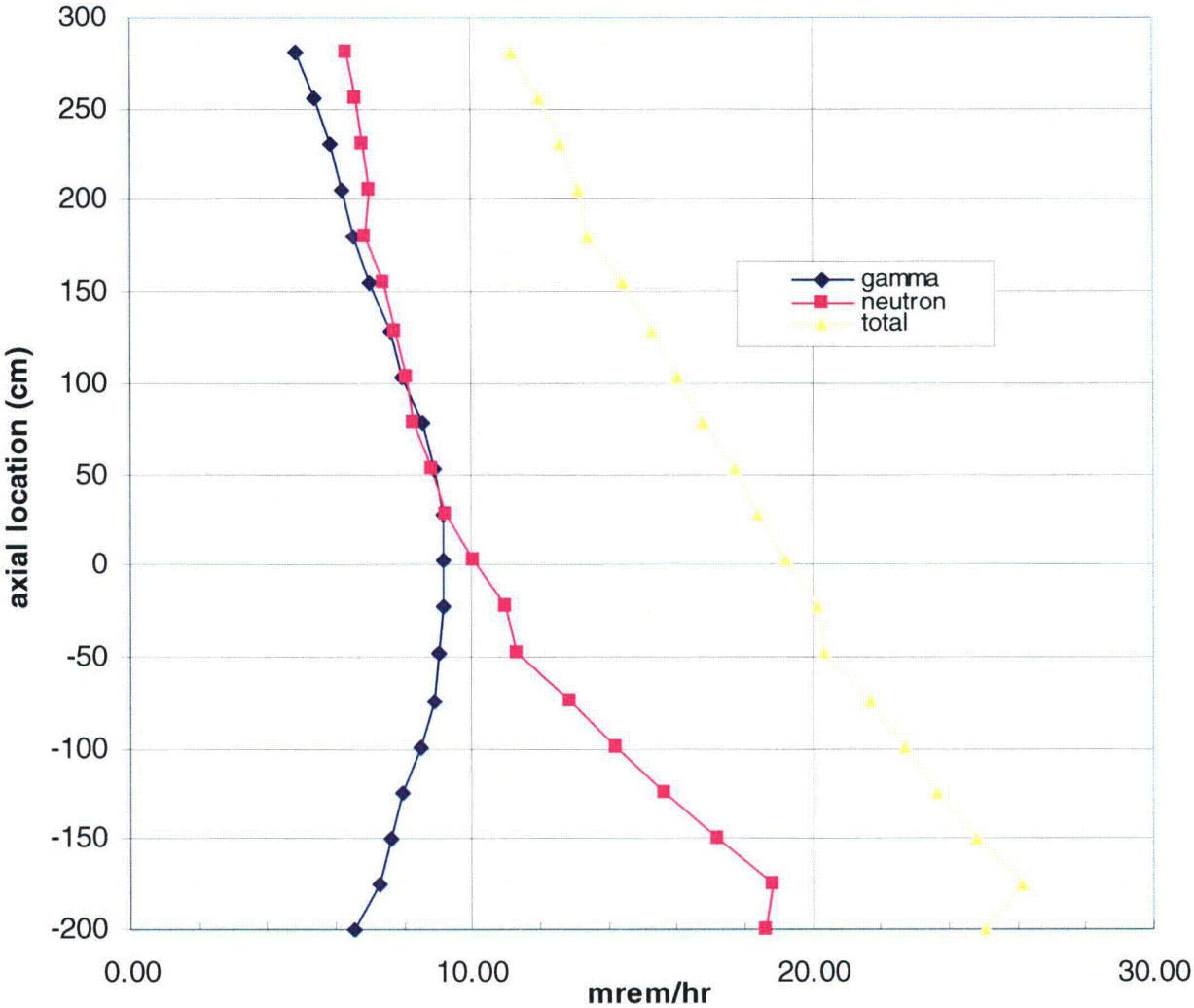

FIGURE A7A.5-5
TN-40HT CASK DOSE RATES 2 M FROM SIDE SURFACE
NORMAL AND OFF-NORMAL CONDITIONS

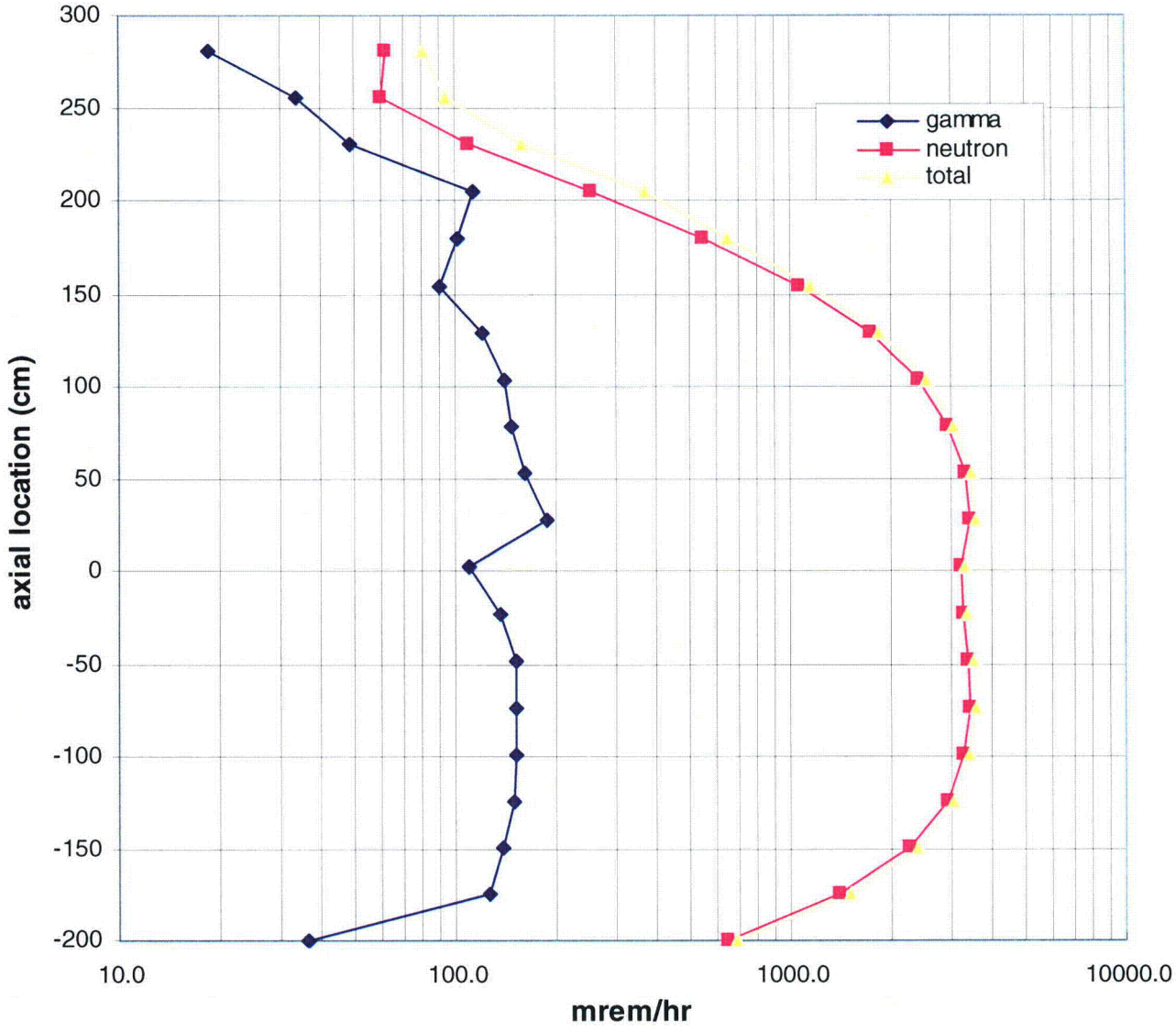

FIGURE A7A.5-6
TN-40HT CASK SIDE SURFACE DOSE RATES – ACCIDENT CONDITIONS

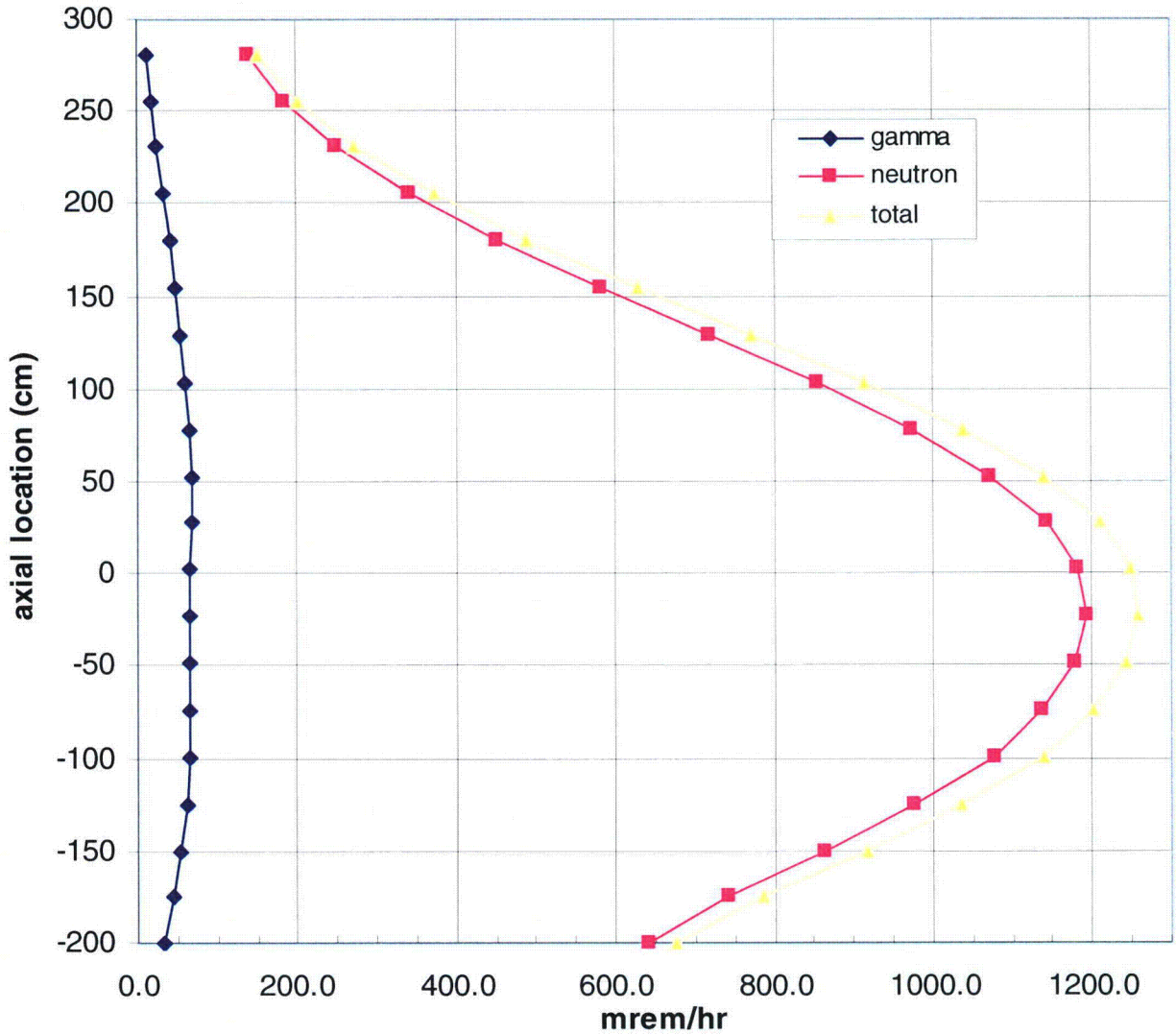

FIGURE A7A.5-7
TN-40HT CASK DOSE RATES 1 M FROM SIDE SURFACE – ACCIDENT CONDITIONS

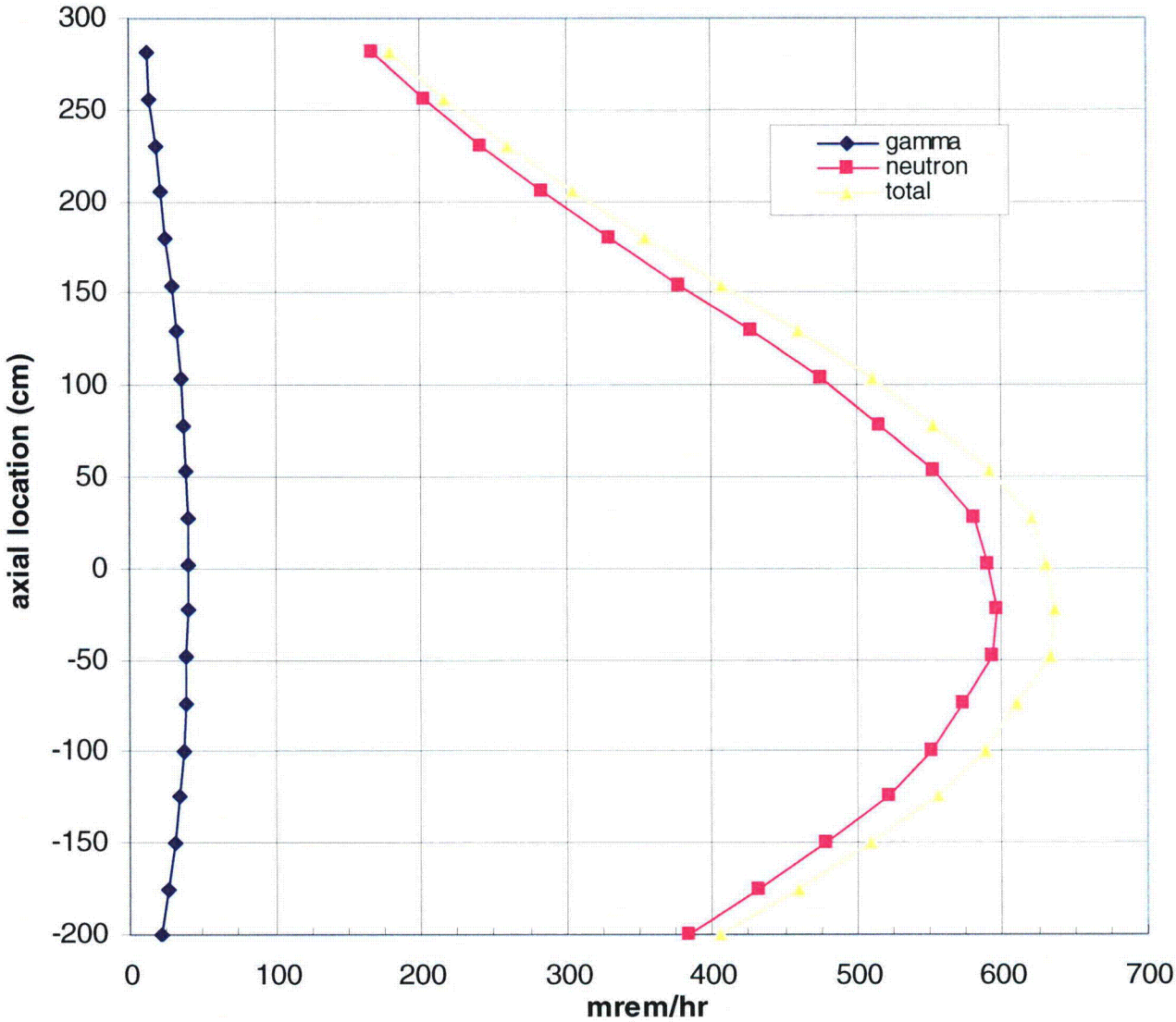

FIGUREA7A.5-8
TN-40HT CASK DOSE RATES 2 M FROM SIDE SURFACE – ACCIDENT CONDITIONS

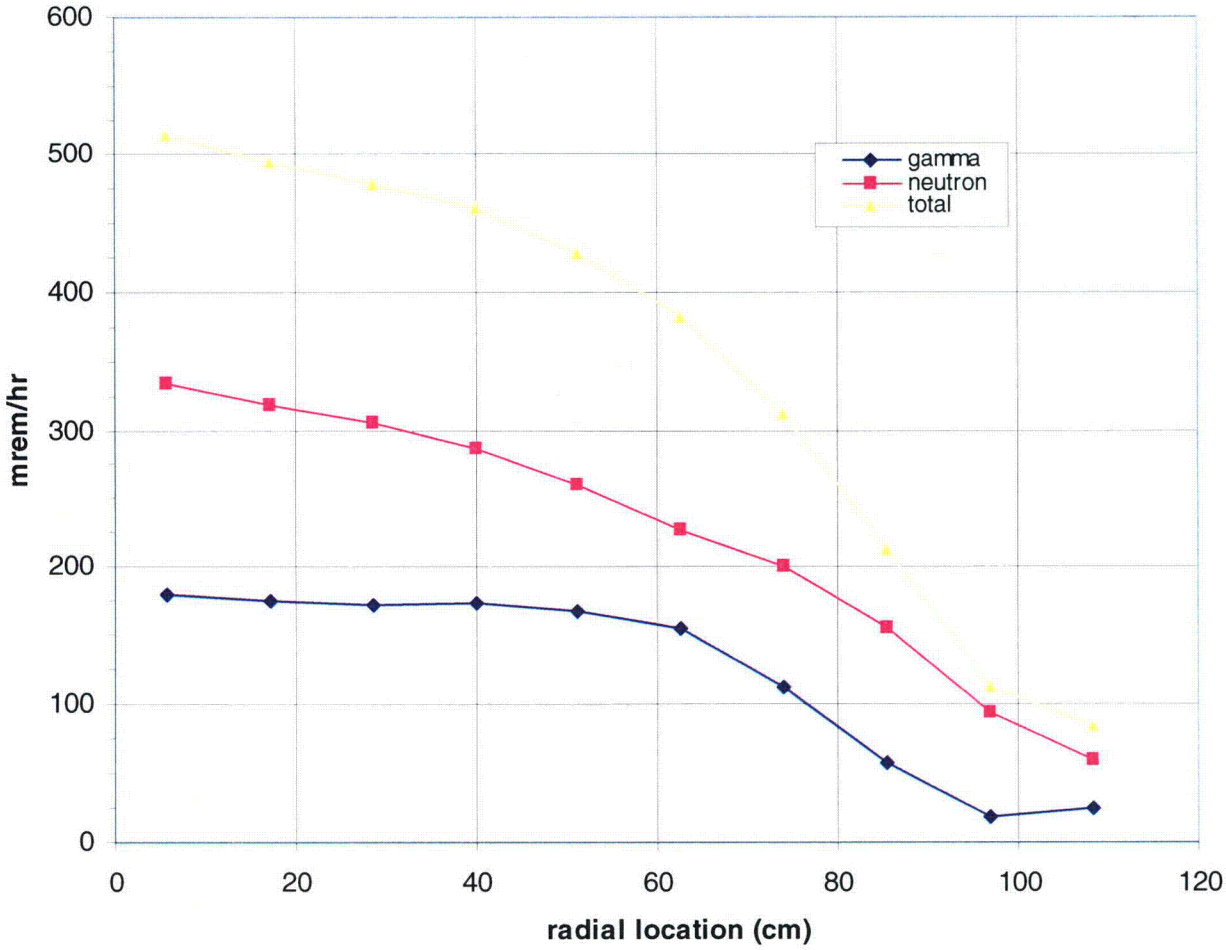

FIGURE A7A.5-9
TN-40HT CASK LID SURFACE DOSE RATES – NORMAL AND ACCIDENT CONDITIONS

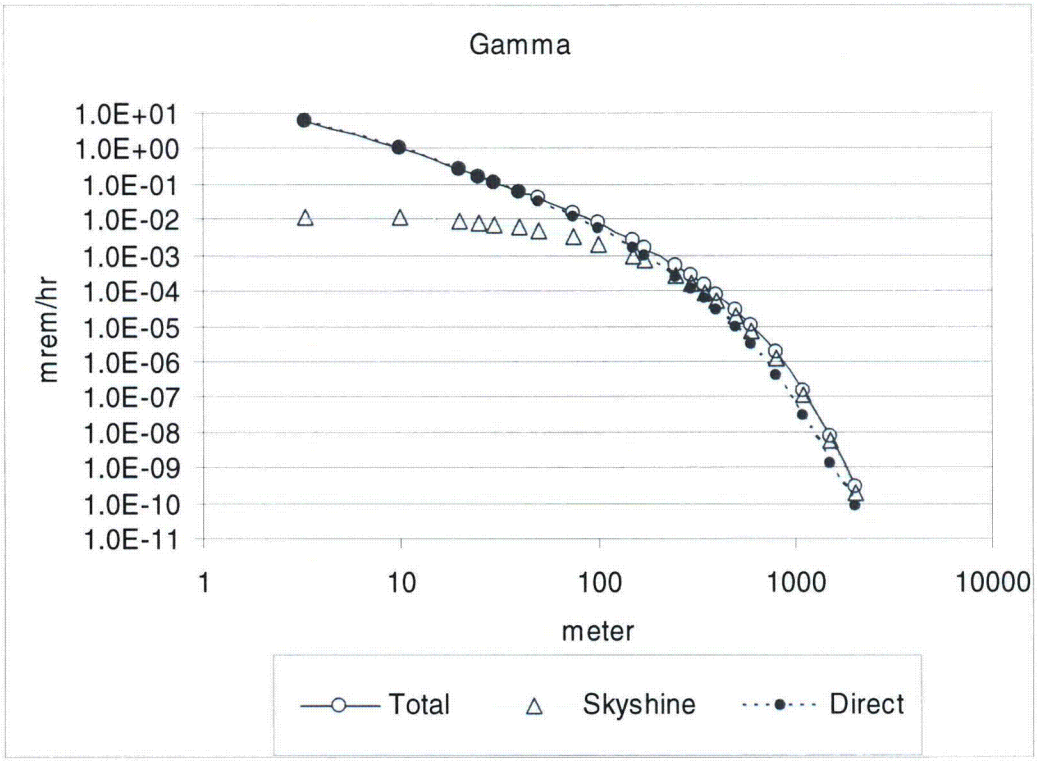

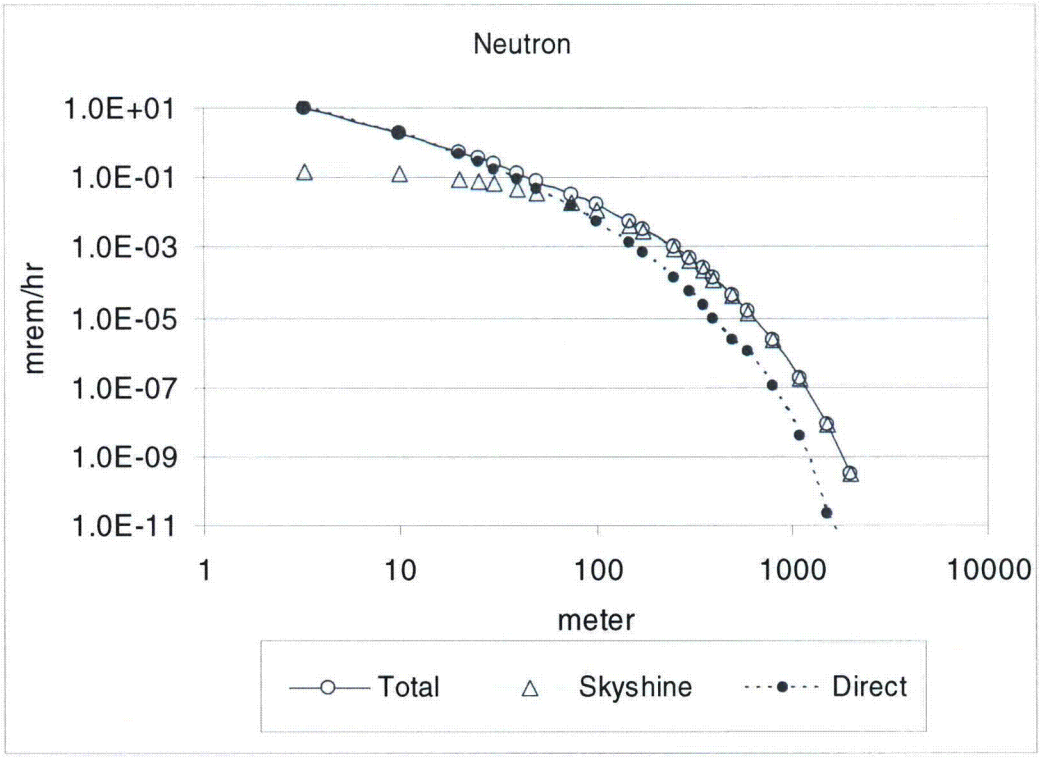

FIGURE A7A.6-1
TN-40HT CASK – DOSE RATE AS A FUNCTION OF DISTANCE

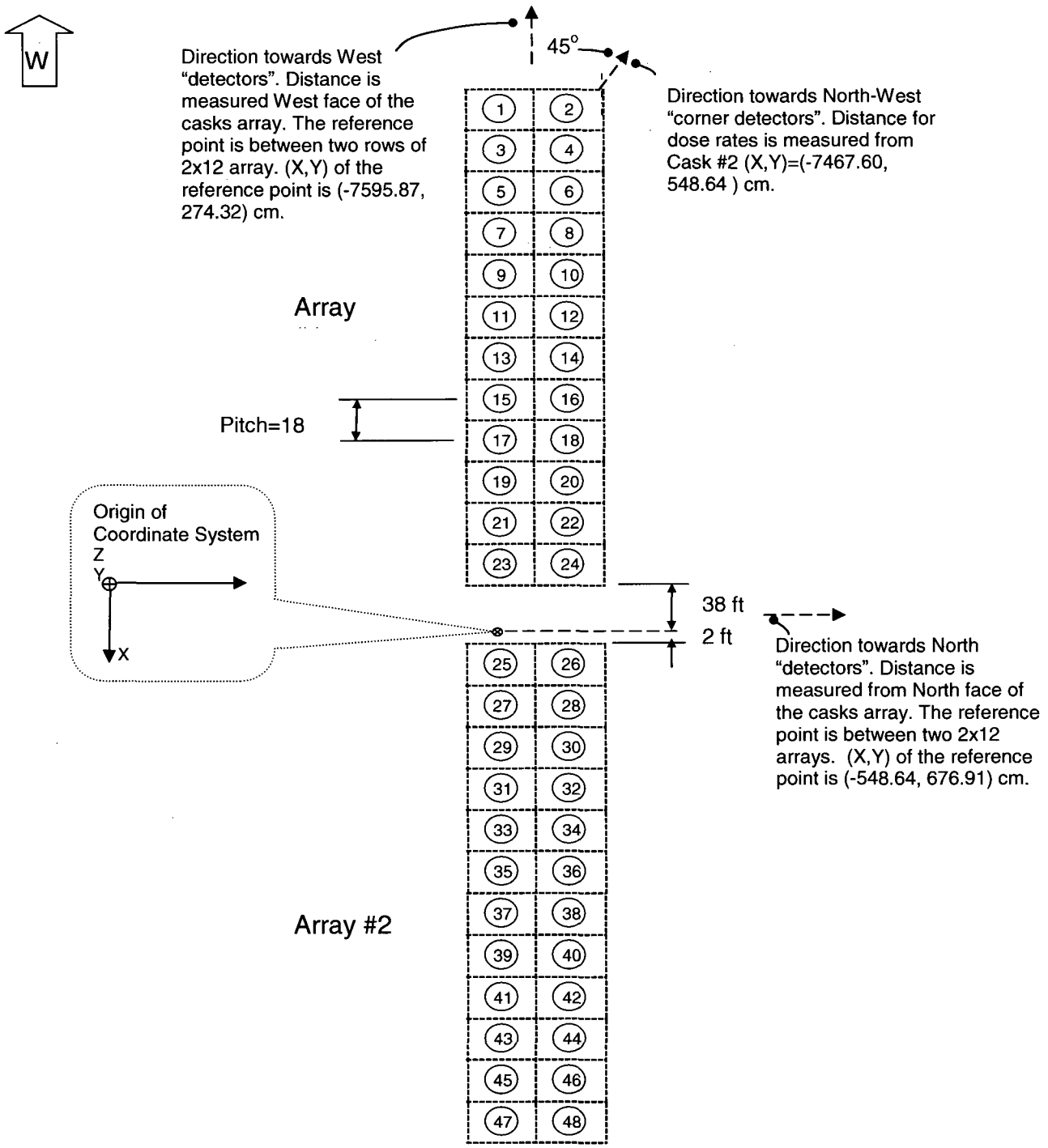

FIGURE A7A.7-1
ARRANGEMENT OF CASKS AND "DETECTORS" IN MCNP CALCULATION MODEL FOR ISFSI DOSE RATE ESTIMATES

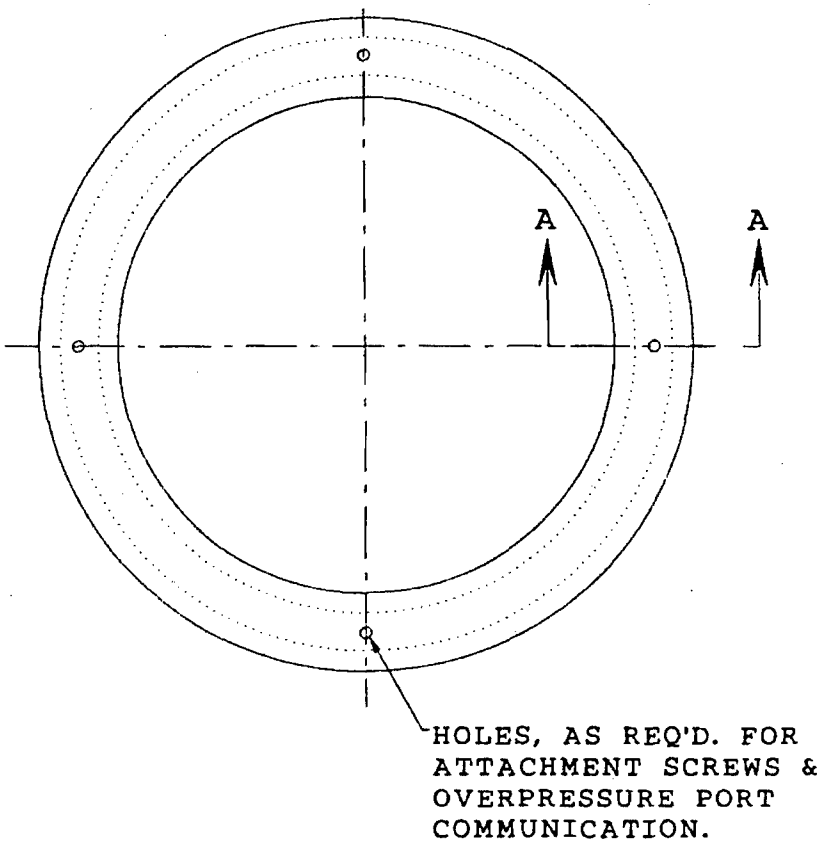

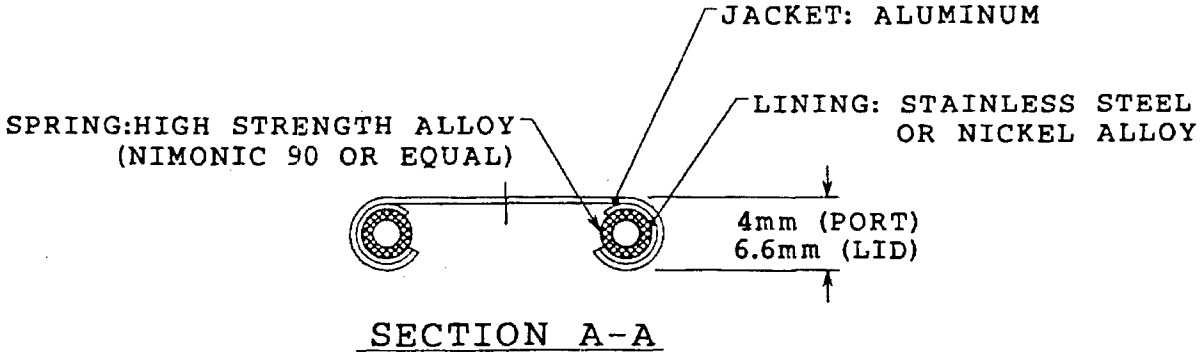

FIGURE A7A.8-1
LID, VENT PORT AND DRAIN PORT METAL SEALS

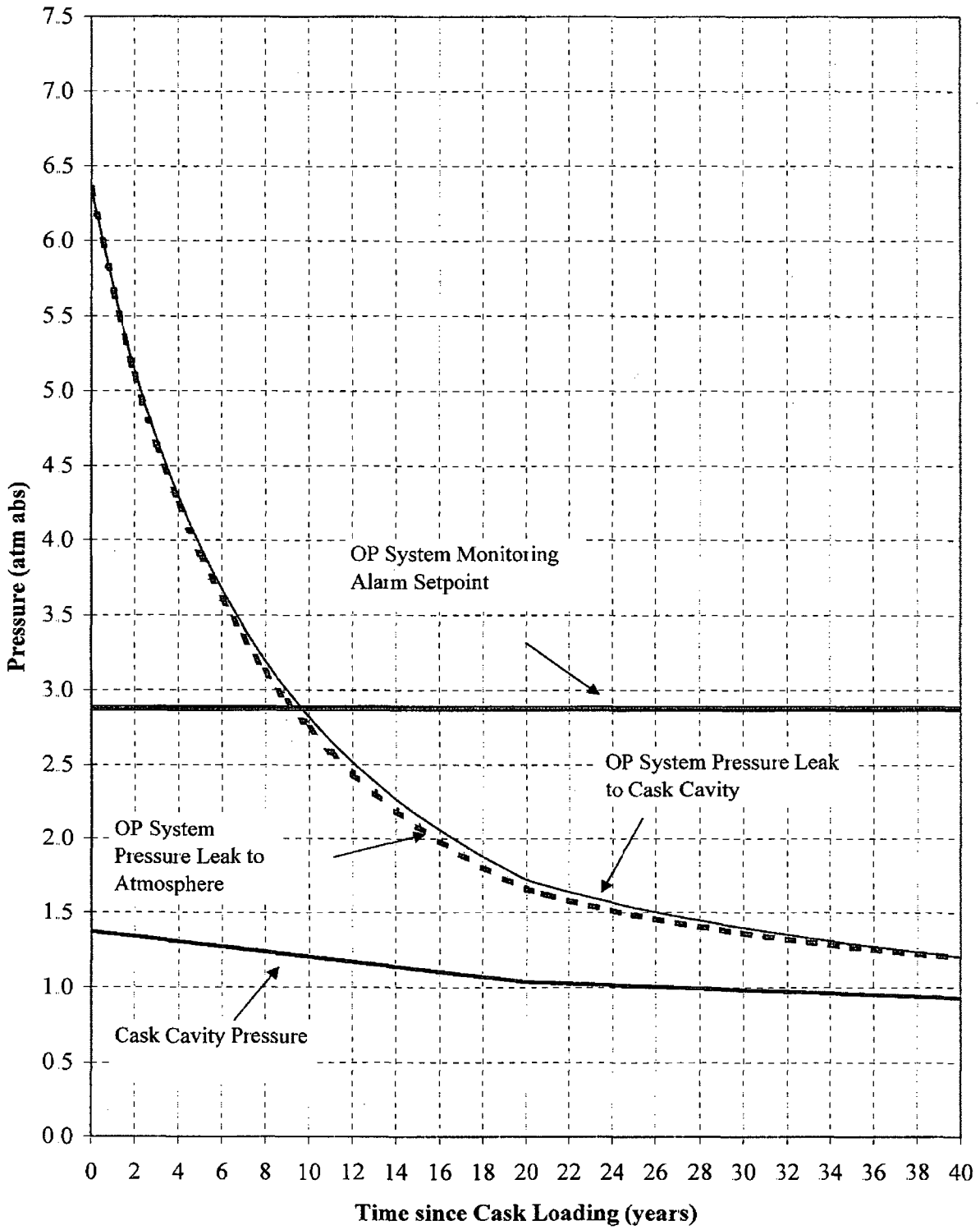

FIGUREA7A.8-2
OVERPRESSURE MONITORING SYSTEM PRESSURE DROP WITH TIME

Appendix A7B

TN-40HT SHIELDING EVALUATION COMPUTER INPUT

A7B SAMPLE SHIELDING INPUT FILES

This Section provides representative input files for the computer codes, SAS2H and MCNP, utilized to calculate the source terms and dose rates for the TN-40HT Cask. A listing of the file names and a brief description are provided below, followed by the files themselves.

Section #	File Name	Description
A7B.1	I_6034.in	SAS2H Input File for Design Basis Fuel (In-core zone)
A7B.2	htgnfn	MCNP Input for Primary Gamma Dose (Near Field, Normal and Off-Normal Storage Conditions)
A7B.3	Htgnfa	MCNP Input for Primary Gamma Dose (Near Field, Accident Storage Conditions)
A7B.4	gfwd2_	MCNP Input for Gamma Dose (Far Field)

A7B.1 SAS2H INPUT FILE FOR DESIGN BASIS FUEL (IN-CORE ZONE)

I 6043.in

PROPRIETARY - TRADE SECRET INFORMATION
WITHHELD PURSUANT TO 10 CFR 2.390

PROPRIETARY - TRADE SECRET INFORMATION
WITHHELD PURSUANT TO 10 CFR 2.390

PROPRIETARY - TRADE SECRET INFORMATION
WITHHELD PURSUANT TO 10 CFR 2.390

A7B.2 MCNP INPUT FOR PRIMARY GAMMA DOSE (NEAR FIELD, NORMAL AND OFF-NORMAL STORAGE CONDITIONS)

htgnfn

PROPRIETARY - TRADE SECRET INFORMATION WITHHELD PURSUANT TO 10 CFR 2.390

PROPRIETARY - TRADE SECRET INFORMATION
WITHHELD PURSUANT TO 10 CFR 2.390

PROPRIETARY - TRADE SECRET INFORMATION
WITHHELD PURSUANT TO 10 CFR 2.390

PROPRIETARY - TRADE SECRET INFORMATION
WITHHELD PURSUANT TO 10 CFR 2.390

PROPRIETARY - TRADE SECRET INFORMATION
WITHHELD PURSUANT TO 10 CFR 2.390

PROPRIETARY - TRADE SECRET INFORMATION
WITHHELD PURSUANT TO 10 CFR 2.390

PROPRIETARY - TRADE SECRET INFORMATION
WITHHELD PURSUANT TO 10 CFR 2.390

PROPRIETARY - TRADE SECRET INFORMATION
WITHHELD PURSUANT TO 10 CFR 2.390

PROPRIETARY - TRADE SECRET INFORMATION
WITHHELD PURSUANT TO 10 CFR 2.390

PROPRIETARY - TRADE SECRET INFORMATION
WITHHELD PURSUANT TO 10 CFR 2.390

PROPRIETARY - TRADE SECRET INFORMATION
WITHHELD PURSUANT TO 10 CFR 2.390

PROPRIETARY - TRADE SECRET INFORMATION
WITHHELD PURSUANT TO 10 CFR 2.390

PROPRIETARY - TRADE SECRET INFORMATION
WITHHELD PURSUANT TO 10 CFR 2.390

PROPRIETARY - TRADE SECRET INFORMATION
WITHHELD PURSUANT TO 10 CFR 2.390

PROPRIETARY - TRADE SECRET INFORMATION
WITHHELD PURSUANT TO 10 CFR 2.390

PROPRIETARY - TRADE SECRET INFORMATION
WITHHELD PURSUANT TO 10 CFR 2.390

PROPRIETARY - TRADE SECRET INFORMATION
WITHHELD PURSUANT TO 10 CFR 2.390

PROPRIETARY - TRADE SECRET INFORMATION
WITHHELD PURSUANT TO 10 CFR 2.390

A7B.3 MCNP INPUT FOR PRIMARY GAMMA DOSE (NEAR FIELD, ACCIDENT STORAGE CONDITIONS)

Htgnfa

PROPRIETARY - TRADE SECRET INFORMATION WITHHELD PURSUANT TO 10 CFR 2.390

PROPRIETARY - TRADE SECRET INFORMATION
WITHHELD PURSUANT TO 10 CFR 2.390

PROPRIETARY - TRADE SECRET INFORMATION
WITHHELD PURSUANT TO 10 CFR 2.390

PROPRIETARY - TRADE SECRET INFORMATION
WITHHELD PURSUANT TO 10 CFR 2.390

PROPRIETARY - TRADE SECRET INFORMATION
WITHHELD PURSUANT TO 10 CFR 2.390

PROPRIETARY - TRADE SECRET INFORMATION
WITHHELD PURSUANT TO 10 CFR 2.390

PROPRIETARY - TRADE SECRET INFORMATION
WITHHELD PURSUANT TO 10 CFR 2.390

PROPRIETARY - TRADE SECRET INFORMATION
WITHHELD PURSUANT TO 10 CFR 2.390

PROPRIETARY - TRADE SECRET INFORMATION
WITHHELD PURSUANT TO 10 CFR 2.390

PROPRIETARY - TRADE SECRET INFORMATION
WITHHELD PURSUANT TO 10 CFR 2.390

PROPRIETARY - TRADE SECRET INFORMATION
WITHHELD PURSUANT TO 10 CFR 2.390

PROPRIETARY - TRADE SECRET INFORMATION
WITHHELD PURSUANT TO 10 CFR 2.390

PROPRIETARY - TRADE SECRET INFORMATION
WITHHELD PURSUANT TO 10 CFR 2.390

PROPRIETARY - TRADE SECRET INFORMATION
WITHHELD PURSUANT TO 10 CFR 2.390

PROPRIETARY - TRADE SECRET INFORMATION
WITHHELD PURSUANT TO 10 CFR 2.390

PROPRIETARY - TRADE SECRET INFORMATION
WITHHELD PURSUANT TO 10 CFR 2.390

PROPRIETARY - TRADE SECRET INFORMATION
WITHHELD PURSUANT TO 10 CFR 2.390

A7B.4 MCNP INPUT FOR GAMMA DOSE (FAR FIELD)

gfwd2

PROPRIETARY - TRADE SECRET INFORMATION
WITHHELD PURSUANT TO 10 CFR 2.390

PROPRIETARY - TRADE SECRET INFORMATION
WITHHELD PURSUANT TO 10 CFR 2.390

PROPRIETARY - TRADE SECRET INFORMATION
WITHHELD PURSUANT TO 10 CFR 2.390

PROPRIETARY - TRADE SECRET INFORMATION
WITHHELD PURSUANT TO 10 CFR 2.390

PROPRIETARY - TRADE SECRET INFORMATION
WITHHELD PURSUANT TO 10 CFR 2.390

PROPRIETARY - TRADE SECRET INFORMATION
WITHHELD PURSUANT TO 10 CFR 2.390

PROPRIETARY - TRADE SECRET INFORMATION
WITHHELD PURSUANT TO 10 CFR 2.390

PROPRIETARY - TRADE SECRET INFORMATION
WITHHELD PURSUANT TO 10 CFR 2.390

PROPRIETARY - TRADE SECRET INFORMATION
WITHHELD PURSUANT TO 10 CFR 2.390

PROPRIETARY - TRADE SECRET INFORMATION
WITHHELD PURSUANT TO 10 CFR 2.390

PROPRIETARY - TRADE SECRET INFORMATION
WITHHELD PURSUANT TO 10 CFR 2.390

PROPRIETARY - TRADE SECRET INFORMATION
WITHHELD PURSUANT TO 10 CFR 2.390

PROPRIETARY - TRADE SECRET INFORMATION
WITHHELD PURSUANT TO 10 CFR 2.390

PROPRIETARY - TRADE SECRET INFORMATION
WITHHELD PURSUANT TO 10 CFR 2.390

PROPRIETARY - TRADE SECRET INFORMATION
WITHHELD PURSUANT TO 10 CFR 2.390

PROPRIETARY - TRADE SECRET INFORMATION
WITHHELD PURSUANT TO 10 CFR 2.390

PROPRIETARY - TRADE SECRET INFORMATION
WITHHELD PURSUANT TO 10 CFR 2.390

PROPRIETARY - TRADE SECRET INFORMATION
WITHHELD PURSUANT TO 10 CFR 2.390

PROPRIETARY - TRADE SECRET INFORMATION
WITHHELD PURSUANT TO 10 CFR 2.390

PROPRIETARY - TRADE SECRET INFORMATION
WITHHELD PURSUANT TO 10 CFR 2.390

PROPRIETARY - TRADE SECRET INFORMATION
WITHHELD PURSUANT TO 10 CFR 2.390

PROPRIETARY - TRADE SECRET INFORMATION
WITHHELD PURSUANT TO 10 CFR 2.390

PROPRIETARY - TRADE SECRET INFORMATION
WITHHELD PURSUANT TO 10 CFR 2.390

SECTION A8

ACCIDENT ANALYSIS

A8.1 OFF-NORMAL OPERATIONS

Off-normal operations are design events of the second type (Design Event II) as defined in ANSI/ANS 57.9 (Reference 1). Design Event II consists of that set of events that, although not occurring regularly, can be expected to occur with moderate frequency or on the order of once during a calendar year of ISFSI operation.

Of the various types of Design Event II conditions described in Reference 1, only the loss of external power supply for a limited duration is considered to be applicable and credible to ISFSI operations. Loss of electric power as an off-normal condition is analyzed below.

A8.1.1 LOSS OF ELECTRICAL POWER

A total loss of ac power is postulated to occur in the feeder cabling which supplies power to the ISFSI. The failure could be either an open or a short to ground circuit, or any other mechanism capable of producing an interruption of power.

A8.1.1.1 POSTULATED CAUSE OF THE EVENT

A loss of power to the ISFSI may occur as a result of natural phenomena, such as lightning or extreme wind, or as a result of undefined disturbances in the non-safety-related portion of the electric power system of the Prairie Island Nuclear Generating Plant (PINGP).

If electric power is lost, the following systems could be de-energized and rendered nonfunctional:

- Area lighting
- Area receptacles
- Cask pressure monitoring instrumentation

A8.1.1.2 DETECTION OF EVENTS

A loss of power at the PINGP site would be indicated and/or alarmed in the main control room. If the loss of power were localized at the ISFSI site, this would be detected during periodic surveillance by noting that area lighting is not operational.

A8.1.1.3 ANALYSIS OF EFFECTS AND CONSEQUENCES

This event has no safety or radiological consequences because a loss of power will not affect the integrity of the storage casks, jeopardize the safe storage of the fuel, or result in radiological releases. None of the systems whose failure could be caused by this event are necessary for the accomplishment of the safety function of the ISFSI. The lighting system functions merely for convenience and visual monitoring, and the instrumentation monitors the long-term performance of the storage casks with respect to the cask seals. None of these parameters are expected to change rapidly and their status is not dependent upon electric power.

A8.1.1.4 CORRECTIVE ACTION

Following a loss of electric power to the ISFSI, plant maintenance personnel will be informed and will isolate the fault and restore service by conventional means. Such an operation is straightforward and routine for the maintenance personnel of an electric utility.

A8.1.2 RADIOLOGICAL IMPACT FROM OFF-NORMAL OPERATIONS

No radiological impact from off-normal operations is postulated.

A8.2 ACCIDENTS

Accidents are design events of the third and fourth type (Design Events III and IV) as defined in ANSI/ANS 57.9 (Reference 1). Design Event III consists of that set of infrequent events that could reasonably be expected to occur during the lifetime of the ISFSI.

Design Event IV consists of the events that are postulated because their consequences may result in the maximum potential impact on the immediate environs. Their consideration establishes a conservative design basis for certain systems with important confinement features.

A8.2.1 EARTHQUAKE

A8.2.1.1 CAUSE OF ACCIDENT

The design earthquake (DE) is postulated to occur as a design basis extreme natural phenomenon.

A8.2.1.2 ACCIDENT ANALYSIS

Cask response to a seismic event is evaluated in Sections A3.2.3 and A4.2.3. Results of these analyses show that the cask does not tip over or slide and that the containment vessel stresses resulting from the seismic loads are below ASME code allowable stresses for accident conditions. The integrity of the cask is not compromised. No damage to the cask is postulated. The basket stresses are also low and do not result in deformations that would prevent fuel from being unloaded from the cask.

A8.2.1.3 ACCIDENT DOSE CALCULATIONS

The DE does not damage the cask. Hence, no radioactivity is released and there is no associated dose increase due to this event.

A8.2.2 EXTREME WIND

A8.2.2.1 CAUSE OF ACCIDENT

The extreme winds due to passage of the design tornado as defined in Section A3.2.1 are postulated to occur as an extreme natural phenomenon.

A8.2.2.2 ACCIDENT ANALYSIS

In Section A3.2.1, it is shown that extreme winds do not result in a cask tip over or sliding of the cask. The pressure due to high winds on the surface of the cask is bounded by the assumed external pressure of 25 psig. The stresses in the cask resulting from this external pressure are presented in Appendix A4A. High winds have no effect on the integrity of the cask, and do not result in damage to the cask. High winds do not affect the basket or the ability to retrieve the spent fuel from the cask. The effect of tornado missiles hitting the cask has been evaluated in Section A3.2.1. These analyses show that the stresses in the cask as a result of missile impact are well below the ASME Code allowable stresses for Accident (Level D) conditions. It is also shown in Section A3.2.1 that the tornado missile impact will not result in a cask tip over. Local damage to the neutron shield may result from the tornado missile impact.

A8.2.2.3 ACCIDENT DOSE CALCULATIONS

Extreme winds are not capable of overturning the casks nor of damaging the cask seals. The overpressure system and the neutron shielding may be damaged.

To determine the bounding dose rate, loss of neutron shielding (322 mrem from Section A8.2.5) is combined with the total effective dose equivalent (TEDE) from the loss of one confinement barrier and 100% fuel cladding failure (24 mrem from Section A8.2.9). The resulting site boundary accident dose, 346 mrem, is below the 5 rem TEDE limit as specified in 10 CFR 72.106(b) (Reference 2).

A8.2.3 FLOOD

A8.2.3.1 CAUSE OF ACCIDENT

The probable maximum flood has been calculated to reach a level of 703.6 ft., with wave action to a maximum level of 706.7 ft.

A8.2.3.2 ACCIDENT ANALYSIS

The casks are designed to withstand the forces developed by the probable maximum flood without damage to cask integrity or tipping of the casks. The height of the cask seals will be above the level of the probable maximum flood and associated wave action. Accordingly no fuel damage or criticality is postulated to occur as a result of flooding. Analyses are contained in Section A3.2.2.

A8.2.3.3 ACCIDENT DOSE CALCULATIONS

The probable maximum flood is not capable of overturning the casks or of damaging their seals. Therefore, no resultant doses are projected.

A8.2.4 EXPLOSION

A8.2.4.1 CAUSE OF ACCIDENT

A munition barge explosion has been postulated to occur at a location approximately 2600 feet from the ISFSI. This occurrence is described in detail in Section 2.2. The pressure wave of 2.25 psi is estimated to occur at the ISFSI.

A8.2.4.2 ACCIDENT ANALYSIS

The TN-40HT cask is designed for an external pressure of 25 psig as described in Appendix A4A.

A8.2.4.3 ACCIDENT DOSE CALCULATIONS

The cask will not tip as a result of the postulated pressure wave. Accordingly, no cask damage or release of radioactivity is postulated. Since no radioactivity is released, no resultant dose increase is associated with this event.

A8.2.5 FIRE

A8.2.5.1 CAUSE OF ACCIDENT

The only combustible materials in the ISFSI are in the form of insulation on instrumentation wiring and paint on the outside surface of the storage casks. In addition, the tow vehicle will contain a small amount of gasoline or diesel fuel. No other combustible or explosive materials are allowed to be stored on the ISFSI slabs. The ISFSI area is cleared of trees. The entire area surrounding the Equipment Storage Building and concrete pad within the perimeter road is covered with crushed rock. In addition, other equipment in the area is adequately separated from the ISFSI slabs. Therefore, no fires other than small electrical fires are considered credible at the ISFSI.

However a hypothetical fire accident is evaluated for the TN-40HT cask based on a fuel fire, the source of fuel being that from a ruptured fuel tank of the cask transporter tow vehicle. The bounding capacity of the fuel tank is 200 gallons and the bounding hypothetical fire is an engulfing fire around the cask.

A8.2.5.2 ACCIDENT ANALYSIS

The evaluation of the hypothetical fire event is presented in Section A3.3.2.2.2. The fire thermal evaluation is performed primarily to demonstrate the containment integrity of the TN-40HT cask. This is assured as long as the metal lid seals remain below 536 °F and the cavity pressure is less than 100 psig.

Based on the thermal analyses for the fire accident conditions, the TN-40HT cask can withstand the hypothetical fire accident event without compromising its containment integrity. No melting of the metallic cask components occurs. Peak cask component temperatures are summarized in Table A3.3-6. The maximum seal temperature is well below the temperature limit of the metal seals. Table A3.3-15 and Table A3.3-16 show that at the elevated temperatures corresponding to the hypothetical fire, the cask cavity pressure remains below the analyzed pressure of 100 psig.

A8.2.5.3 ACCIDENT DOSE CALCULATIONS

Local damage to the neutron shielding may result from the fire. This is bounded by removal of all the neutron shielding which is evaluated in Appendix A7A. Even with this conservative assumption, the site boundary accident dose rates are below 5 rem to the whole body or any organ as specified in 10CFR72.106(b) (Reference 2).

The off-site doses are evaluated for the following accident condition:

1) loss of radial neutron shielding and
2) loss of the protective cover and top neutron shield.

For accident conditions, the following assumptions are made:

a) the nearest postulated site boundary is 100 meters distant from the cask
b) the accident involves a single cask
c) the accident duration is 30 days
d) a person remains at the postulated site boundary 24 hours per day for the entire duration

The normal condition total dose rates at 100 meters are scaled by the ratio of accident to normal surface dose rates as shown in the following table. All units are mrem/hr.

	Normal Dose Rate 100 m Table A7A.2-2	Accident, Surface Table A7A.2-1	Average, Surface Table A7A.2-1	Accident, 100 m mrem/hr
Gamma	7.59E-03	116	35.5	2.48E-02
Neutron	1.67E-02	1980	78.7	4.20E-01
			Total:	4.45E-01

The total dose over 30 days would be 320 mrem. The background from the rest of the ISFSI would be less than 1/12 of the 25 mrem/year limit (10 CFR 72.104) (Reference 2), or 2 mrem. The combined total accident dose would be 322 mrem. There is no activity release from the cask containment.

A8.2.6 INADVERTENT LOADING OF A NEWLY DISCHARGED FUEL ASSEMBLY

A8.2.6.1 CAUSE OF ACCIDENT

The possibility of a spent fuel assembly, with a heat generation rate greater than 0.8 kw, being erroneously selected for storage in a cask has been considered. The cause of this accident is postulated to be an error during the loading operations, e.g., wrong assembly picked by the fuel handling crane, or a failure in the administrative controls governing the fuel handling operations.

A8.2.6.2 ACCIDENT ANALYSIS

The fuel assemblies require several years of storage in the spent fuel pool before the heat generation decays to a rate below 0.8 kw. This accident scenario postulates the inadvertent loading of an assembly not intended for storage in the storage canister, with a heat generation rate in excess of the design basis specified in Section A3.1.1.

In order to preclude this accident from going undetected, and to ensure that appropriate rectification actions can take place prior to the sealing of the casks, a final verification of the assemblies loaded into the casks and a comparison with fuel management records will be performed to ensure that the loaded assemblies do not exceed any of the specified limits.

These administrative controls and the records associated with them will be included in the procedures described in Section A9 and will comply with the applicable requirements of the Quality Assurance Program described in Section A11.

Therefore, appropriate and sufficient actions will be taken to ensure that an erroneously loaded fuel assembly does not remain undetected. In particular, the storage of a fuel assembly with a heat generation in excess of 0.8 kw is not considered credible in view of the multiple administrative controls.

A8.2.6.3 ACCIDENT DOSE CALCULATIONS

The inadvertent loading of a fuel assembly not intended for storage in a storage cask is not considered to be a credible occurrence. Therefore, no doses are postulated.

A8.2.7 CASK SEAL LEAKAGE

The storage casks feature redundant seals in conjunction with an extremely rugged body design. Additional barriers to the release of radioactivity are presented by the sintered fuel pellet matrix and the Zircaloy cladding which surrounds the fuel pellets. Furthermore, the interseal gaps are pressurized in excess of the cask cavity. As a result, no credible mechanisms that could result in leakage of radioactive products have been identified. Nevertheless, a loss of the storage cask confinement capability is postulated in Section A8.2.9, and the results found to be negligible.

A8.2.8 HYPOTHETICAL CASK DROP ACCIDENT

A8.2.8.1 CAUSE OF ACCIDENT

The stability of the TN-40HT storage cask in the upright position on the ISFSI concrete storage pad is demonstrated in Section A3.2. The effects of tornado wind and missiles, flood water and earthquakes are described in Sections A3.2.1, A3.2.2 and A3.2.3, respectively. It is shown in those sections that the cask will not tip over under the most severe natural phenomena specified in the Prairie Island Updated Safety Analysis Report.

The cask is lifted at Prairie Island using a single failure proof crane. The upper trunnions are designed to meet the requirements of NUREG-0612 (Reference 5) for non-redundant lifting fixture. This is accomplished by evaluating the trunnions to the stress design factors required by ANSI N14.6 (Reference 3), i.e. capable of lifting 6 times and 10 times the cask weight without exceeding the yield and ultimate strengths of the material, respectively. The loaded cask will be handled by the transport vehicle in a vertical orientation and not lifted higher than 18 in.

However section of the SAR considers design events of the third and fourth types (includes accidents) as defined in ANSI/ANS 57.9. The third type of events are those that could reasonably be expected to occur over the lifetime of the ISFSI (does not include dropping of the cask). The fourth type of event includes severe natural phenomena (described in Section A8.2.1 through A8.2.5) and man-induced low probability events postulated because their consequences could result in the maximum potential impact on the immediate environs. Therefore the cask is examined for a dropping accident which is an impact event that is extremely unlikely to occur.

A8.2.8.2 ACCIDENT ANALYSIS

In this section the cask is evaluated under bottom end impact on the ISFSI storage pad after a drop from a height of 18 in. The storage pad is the hardest concrete surface outside of the containment building. The cask is always oriented vertically and is never lifted higher than 18 in. once it leaves the containment building. Therefore this case is an upper bound drop event since impact onto a softer surface would result in lower cask deceleration and a lower impact force.

A8.2.8.2.1 DYNAMIC IMPACT LOADS

For the impact analysis, the cask is assumed rigid as compared to the flexibility of the concrete slab/soil system. The methodology described in EPRI Report NP-7551 (Reference 4) is used in this evaluation.

The cask is approximated by a cylinder 199.63 inches long and 89.5 inches in diameter. The effect of the outer shell, which is very thin relative to the main structural body of the cask, is neglected. Also, small variations around top cover and cylinder are neglected. The stiffness variation due to the neglected items of the cask is negligible.

The following material properties, taken from Section 4.2.1 and Section 8.2.8.2.1, are assumed to model the design basis concrete pad and soil foundation.

E_c = Concrete elastic modulus = 3.6×10^6 psi.
σ_u = Ultimate concrete strength = 4,000 psi.
E_s = Sub-soil modulus = 30,000 psi.
S_y = Rebar yield strength = 60,000 psi.
v_c = Poisson's ratio of concrete = 0.17
v_s = Poisson's ratio of soil = 0.45

A conservatively low cask weight of 236.0 kips is used for the impact analysis (lower weight gives higher g load).

The following cask and concrete pad dimensions are used in the analysis.

W = Weight of cask = 236,000 lbs
R = Cask outer radius = 89.5/2 = 44.75 in
A = cask foot print area = $\pi\,(44.75)^2$ = 6291 in^2
L = cask length = 199.63 in.
h_c = Concrete pad thickness = 36 inches
A_s = Rebar (#14) on 12 in. spacing. Area = $\pi/4\,(1.693)^2$ = 2.251 in^2

The ultimate bending capacity of reinforced cement concrete slab, M_u, is computed based on a 1 foot wide pad with a thickness of 36 in., #14 Rebar @ 12 inch spacing and a 2 inch cover. The steel in compression zone of the slab is accounted for by calculating the moment M_u required to yield a pair of rebars.

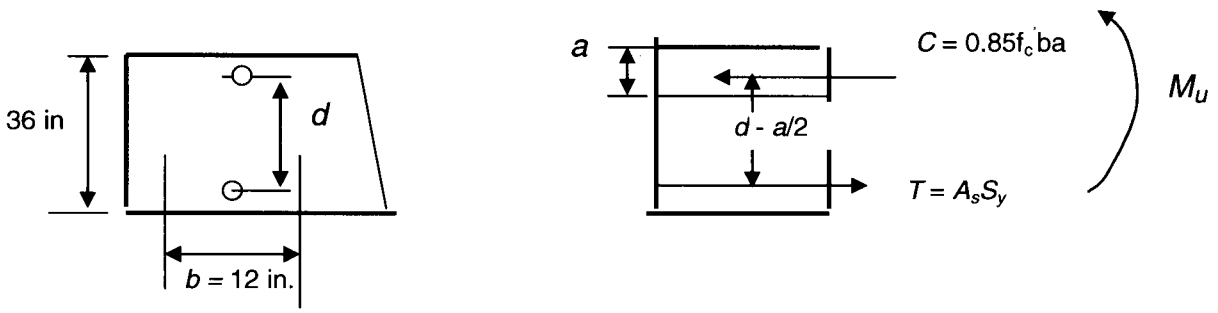

Average depth of steel, d, is the following.

$d = 36 - 4 - 1.693 = 30.31$ in

Therefore,

$C = T = A_sS_y = 0.85f_c' ba$

$a = A_sS_y / 0.85f_c' b = 2.251 \times 60{,}000 / (0.85 \times 4000 \times 12) = 3.310$ in

$M_u = A_s S_y (d - a/2) = 2.251 \times 60{,}000\ (30.31 - 3.310/2) = 3.8701\times10^6$ in-lb/ft width of slab

The results of EPRI NP-7551 report (Reference 4) are presented in terms of a target hardness number, *S*. In general this is given by the following.

$$S = \frac{M_u \sigma_u A}{W^2 \delta_e}$$

Where,

M_u = Ultimate moment capacity of 1 foot section of slab = 3.8701×10^6 in-lb/ft
σ_u = Ultimate concrete strength = 4,000 psi
A = Area of impact surface = 6,291 in^2
W = Weight of cask = 236,000 lbs
δ_e = Deflection of cask under weight of cask (1*g*), in.

The deflection, δ_e, is given as:

$$\delta_e = \frac{W}{2Rk}\left(1 - e^{-\beta R}\cos\beta R\right)$$

Where,

$$k = \frac{\pi E_s}{1-\upsilon_s^2} = \frac{\pi \cdot 30{,}000}{1-0.45^2} = 118{,}179 \text{ psi/in}$$

$$D_c = \frac{E_c h^3}{12\left(1-\upsilon_c^2\right)} = \frac{3.6\times10^6(36^3)}{12\left(1-0.17^2\right)} = 14{,}413\times10^6 \text{ in.lb.}$$

$$\beta = \left(\frac{E_s}{4D_c}\right)^{1/4} = \left(\frac{30{,}000}{4\times14{,}413\times10^6}\right)^{1/4} = 0.02686$$

$$\delta_e = \frac{W}{2Rk}\left(1 - e^{-\beta R}\cos\beta R\right) = \frac{236{,}000}{2(44.75)(118{,}179)}\left(1 - e^{-0.02686\times44.75}\cos 0.02686\times44.75\right) = 0.0156 \text{ in}$$

Then,

$$S = \frac{M_u \sigma_u A}{W^2 \delta_e} = \frac{3.8701\times10^6(4{,}000)(6{,}291)}{236{,}000^2 \cdot 0.0156} = 1.1209\times10^5$$

The force-deformation curve shown in Figure A8.2-1 is obtained by interpolating the data shown on Figure 15 of the EPRI report NP-7551. From Figure A8.2-1, the displacement at the end of elastic phase is about 0.19 inches and elastic-plastic displacement is about 0.54 inches. The maximum force, interpolated for $S = 1.1209\times10^5$, is roughly 31 g.

The final deformation is computed using the force – displacement plot shown in Figure A8.2-1 (interpolated for $S = 1.1209 \times 10^5$). It is assumed that displacements beyond 0.54 inches are fully plastic.

Let x be the final plastic deformation. The energy absorbed by the target, E_{ab} = Area under the force – displacement curve (Figure A8.2-1).

$$E_{ab} = W[\,(10)(0.08)/2 + (18+10)(0.18-0.08)/2 + (23+18)(0.28-0.18)/2 + (28+23)(0.4-0.28)/2 + 31(x-0.54)]$$

The potential energy of the drop, $E_{drop} = W[H + x + 0.54] = W\,[18.54 + x]$

Equating E_{ab} and E_{drop}, (W on both sides cancel) results in,

$$0.40 + 1.40 + 2.05 + 3.06 + 31x - 16.74 = 18.54 + x$$

$$x = 0.95 \text{ inches}$$

Total displacement = 0.54 + 0.95 = 1.49 inches.

The following table summarizes the results of the analysis described above.

Drop Orientation	Peak Deceleration (g)	Target Penetration Depth (in.)
End Drop	31	1.49

A8.2.8.2.2 CASK BODY ANALYSIS

The cask is analyzed conservatively for a 50 g vertical load simulating the end drop. The evaluation is presented in Section A4.2.3.4. All calculated stresses meet code allowables.

A8.2.8.2.3 LID BOLT ANALYSIS

During a bottom end drop, the rim of the lid is forced against the flange of the cask body. The lid is initially seated against the flange by preloading (torquing) the bolts. The bolt preload will not be affected if compressive yielding of the contact bearing area does not occur.

The evaluation of the cask presented in Section A4.2.3.4 shows that during a drop cask accident the maximum stresses in the lid outer plate and the shell flange are less than the yield stress. Thus the bolt preload will not be affected by the bottom drop. Therefore, this hypothetical accident case will not affect the bolts.

A8.2.8.2.4 BASKET ANALYSIS

The basket is analyzed conservatively for a 50 g vertical load simulating the end drop. The evaluation is presented in, Section A4.2.3.4. All calculated stresses meet code allowables.

A8.2.8.3 ACCIDENT DOSE CALCULATIONS

Cask drop will not breach the cask confinement barrier. No radioactivity will be released and no resultant doses will occur.

However, a bounding dose can be determined. The loss of neutron shielding (322 mrem from Section A8.2.5) is combined with the total effective dose equivalent (TEDE) from the loss of one confinement barrier and 100% fuel cladding failure (24 mrem from Section A8.2.9). The resulting site boundary accident dose, 346 mrem, is below the 5 rem TEDE limit as specified in 10 CFR 72.106(b) (Reference 2).

A8.2.9 LOSS OF CONFINEMENT BARRIER

A8.2.9.1 CAUSE OF ACCIDENT

A combined event of failure of one of the seals in addition to a failure of the pressure monitoring system is assessed. This could also be a failure of the pressure boundary of the overpressure system.

A8.2.9.2 ACCIDENT ANALYSIS

Analysis has been performed in Appendix A4A to show that the bolts will be able to maintain the seal under accident conditions. Thus the leak rate is limited to the test leak rate of 1 $x10^{-5}$ ref cm^3/s.

A description of the three possible leaks which could occur is presented below:

- <u>In any of the inner containment seals (lid seal, inner vent seal or inner drain seal)</u>

  The lid and lid penetration cover bolts and seals are designed to prevent leakage during all postulated accident events. Therefore, this is a very unlikely event.

  In this case the overpressure system, which has a higher pressure than the cask cavity, would leak helium into the cask cavity. Since the pressure is higher in the overpressure tank, it would prevent leakage of radioactive materials out of the cask cavity until the pressure between the overpressure tank and the cask cavity equalized. This would take several years, depending on the size of the leak. At the test leak rate, the overpressure system pressure would always exceed the cask cavity pressure, as shown in Appendix A7A. Therefore no leakage of radioactive material can occur, even if the alarm were to fail. Appendix A7A also demonstrates that even if the inner seal has experienced a latent seal failure there is ample time for identifying the leak through routine surveillances.

- In any of the outer seals (lid, overpressure port cover, vent cover or drain cover)

  The lid and lid penetration cover bolts and seals are designed to prevent leakage during all postulated accident events. Therefore, this is a very unlikely event.

  In this case, leakage out of the interspace to the atmosphere would occur. This would not result in release of radioactive material from the cask cavity since the inner seal is intact. Again, as demonstrated in Appendix A7A, a latent seal failure of the outer seals would not result in a release of any radioactive material to the environment. There is also ample time for identifying the leak through routine surveillances.

- A leak in the overpressure system

  This is the most likely cause of a leak, since it is a non safety related component and not designed to withstand accident loadings.

  In this case two scenarios could exist:

  - The overpressure system is not functioning and the inner seal is intact. In this case there is no release of radioactive material to the environment; or

  - The overpressure system is not functioning and the inner seal is leaking at some rate.

  In this latter case, leakage out of the interspace to the atmosphere and the cask cavity could occur. This would not result in release of radioactive material from the cask cavity until the pressure fell to the cask cavity pressure.

  At the test leak rate of 1×10^{-5} ref cm^3/s, this would not occur during a 25 year storage period. However, a leak of this magnitude in combination with a loss of the over pressure system has been evaluated in Appendix A7A.

A8.2.9.3 ACCIDENT DOSE CALCULATIONS

The results of the calculations in Appendix A7A assuming accident conditions indicated that at the site boundary (110m from the cask), for a 30 day release, the total effective dose equivalent is 24 mrem. The total organ dose equivalent to any individual organ (the critical organ in this case is the bone surface) is 244 mrem for a 30 day release. The lens dose equivalent to the lens of the eye is 24.1 mrem for a 30 day release. These values are well below the limiting off site doses defined in 10 CFR 72.106(b).

Another accident condition under consideration is that the overpressure system is not functioning and the inner seal has experienced a latent seal failure. This analysis is presented in Appendix A7A. This accident analysis demonstrates that a latent failure up to 100 times greater that the test value could occur and there is ample time for recovery before the limiting off site doses in 10 CFR 72.106(b) are met. The probability that a gross leak of an inner seal in combination with a gross leak in the outer seal is not considered a credible event.

A8.3 SITE CHARACTERISTICS AFFECTING SAFETY ANALYSIS

Site characteristics have been considered in the formation of the bases for these safety analyses. Conservative assumptions concerning meteorology were used in the determination of χ/Q. The characteristics of extreme winds and their contribution to maximum flood level were considered. Regional and site seismology and geology were used to help define the design earthquake acceleration value and analyze for liquefaction potential. Population distribution and other demographic data were used to determine radiation doses.

Other site characteristics affecting safety analyses include the proximity to the Mississippi River to the ISFSI assumptions concerning barge traffic was used to develop the bases for the explosion (Section A8.2.4).

A8.4 REFERENCES

1. American Nuclear Society, ANSI/ANS-57.9, Design Criteria for an Independent Spent Fuel Storage Installation (Dry Storage Type), 1992.

2. 10 CFR Part 72, "Licensing Requirements for the Independent Storage of Spent Nuclear Fuel and High-Level Radioactive Waste."

3. American National Standards Institute, ANSI N14.6, Special Lifting Devices for Shipping Containers Weighing 10,000 pounds or More, 1986.

4. "Structural Design of Concrete Storage Pads for Spent Fuel Casks", EPRI NP-7551, August 1991 by Rashid, Nickel and James.

5. NUREG-612 "Control of Heavy Loads at Nuclear Power Plants", July 1980

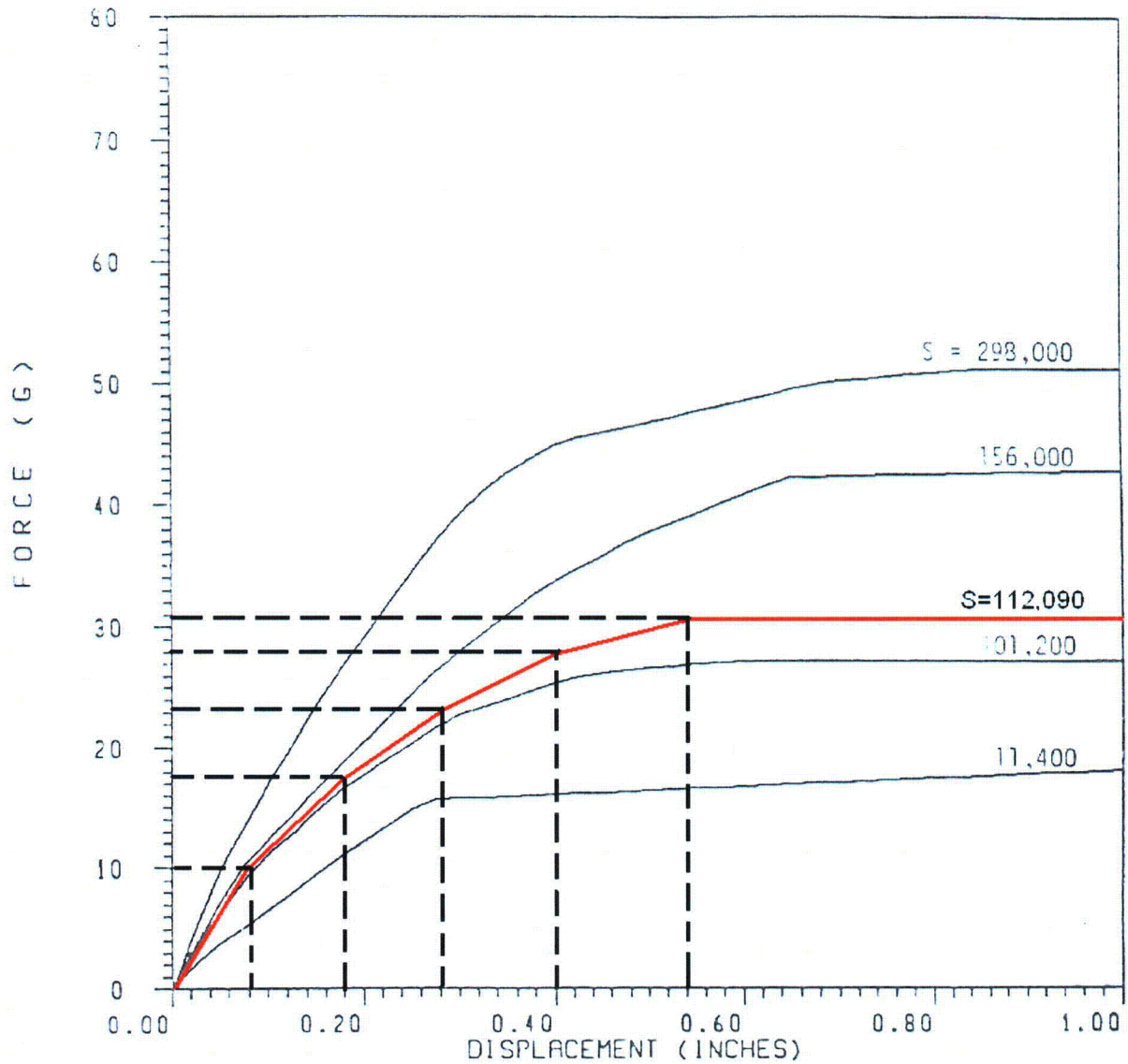

FIGURE A8.2-1
FORCE VS. DISPLACEMENT – END DROP

SECTION A9

CONDUCT OF OPERATIONS

A9.1 ORGANIZATIONAL STRUCTURE

A9.1.1 CORPORATE ORGANIZATION

A9.1.1.1 CORPORATE FUNCTIONS, RESPONSIBILITIES AND AUTHORITIES

The information in Section 9.1.1.1 is independent of cask design.

A9.1.1.2 ISFSI PROJECT ORGANIZATION

The information in Section 9.1.1.2 is independent of cask design.

A9.1.1.3 RELATIONSHIP WITH CONTRACTORS AND SUPPLIERS

The information in Section 9.1.1.3 is independent of cask design.

A9.1.1.4 TECHNICAL STAFF

The information in Section 9.1.1.4 is independent of cask design.

A9.1.2 OPERATING ORGANIZATION, MANAGEMENT AND ADMINISTRATIVE CONTROL SYSTEM

A9.1.2.1 ONSITE ORGANIZATION

The information in Section 9.1.2.1 is independent of cask design.

A9.1.2.2 PERSONNEL FUNCTIONS, RESPONSIBILITIES AND AUTHORITIES

The information in Section 9.1.2.2 is independent of cask design.

A9.1.3 PERSONNEL QUALIFICATION REQUIREMENTS

A9.1.3.1 MINIMUM QUALIFICATION REQUIREMENTS

The information in Section 9.1.3.1 is independent of cask design.

A9.1.3.2 QUALIFICATIONS OF PERSONNEL

The information in Section 9.1.3.2 is independent of cask design.

A9.1.4 LIAISON WITH OUTSIDE ORGANIZATIONS

The information in Section 9.1.4 is independent of cask design.

A9.2 STARTUP TESTING AND OPERATION

A9.2.1 ADMINISTRATIVE PROCEDURES FOR CONDUCTING TEST PROGRAM

The information in Section 9.2.1 is independent of cask design.

A9.2.2 TEST PROGRAM DESCRIPTION

A9.2.2.1 PHYSICAL FACILITIES

The information in Section 9.2.2.1 is independent of cask design.

A9.2.2.2 OPERATIONS

The information in Section 9.2.2.2 is independent of cask design.

A9.2.3 TEST DISCUSSION

The information in Section 9.2.3 is independent of cask design.

A9.2.4 COMPLETION OF PRE-OPERATIONAL TEST PROGRAM

The information in Section 9.2.4 is independent of cask design.

A9.3 TRAINING PROGRAM

The information in Section 9.3 is independent of cask design.

A9.4 NORMAL OPERATIONS

A9.4.1 PROCEDURES

The information in Section 9.4.1 is independent of cask design.

A9.4.1.1 ADMINISTRATIVE PROCEDURES

The information in Section 9.4.1.1 is independent of cask design.

A9.4.1.2 ANNUNCIATOR RESPONSE GUIDES

The information in Section 9.4.1.2 is independent of cask design.

A9.4.1.3 RADIATION PROTECTION PROCEDURES

The information in Section 9.4.1.3 is independent of cask design.

A9.4.1.4 MAINTENANCE PROCEDURES

The information in Section 9.4.1.4 is independent of cask design.

A9.4.1.5 OPERATING PROCEDURES

The information in Section 9.4.1.5 is independent of cask design.

A9.4.1.6 TEST PROCEDURES

The information in Section 9.4.1.6 is independent of cask design.

A9.4.1.7 PREOPERATIONAL TEST PROCEDURES

The information in Section 9.4.1.7 is independent of cask design.

A9.4.1.8 QUALITY ASSURANCE PROCEDURES

The information in Section 9.4.1.8 is independent of cask design.

A9.4.2 RECORDS

The information in Section 9.4.2 is independent of cask design.

A9.5 EMERGENCY PLANNING

The information in Section 9.5 is independent of cask design.

A9.6 PHYSICAL SECURITY PLAN

The information in Section 9.6 is independent of cask design.

A9.7 REFERENCES

The references listed in Section 9.7 are independent of cask design and there are no additional references associated with Section A9.

SECTION A10

OPERATING CONTROLS AND LIMITS

The operating controls and limits associated with the TN-40HT cask are located in the Prairie Island ISFSI Technical Specifications.

SECTION A11

QUALITY ASSURANCE

A11.1 QUALITY ASSURANCE PROGRAM DESCRIPTION

The information in Section 11.1 is independent of cask design except for the location of the TN-40HT safety related components which are listed in Table A4.5-1.

A11.1.1 ORGANIZATION

The information in Section 11.1.1 is independent of cask design.

A11.1.2 QUALITY ASSURANCE PROGRAM

The information in Section 11.1.2 is independent of cask design.

A11.1.3 DESIGN CONTROL

The information in Section 11.1.3 is independent of cask design.

A11.1.4 PROCUREMENT DOCUMENT CONTROL

The information in Section 11.1.4 is independent of cask design.

A11.1.5 INSTRUCTIONS, PROCEDURES AND DRAWINGS

The information in Section 11.1.5 is independent of cask design.

A11.1.6 DOCUMENT CONTROL

The information in Section 11.1.6 is independent of cask design.

A11.1.7 CONTROL OF PURCHASED MATERIALS, EQUIPMENT AND SERVICES

The information in Section 11.1.7 is independent of cask design.

A11.1.8 IDENTIFICATION AND CONTROL OF MATERIALS, PARTS AND COMPONENTS

The information in Section 11.1.8 is independent of cask design.

A11.1.9 CONTROL OF SPECIAL PROCESSES

The information in Section 11.1.9 is independent of cask design.

A11.1.10 INSPECTION

The information in Section 11.1.10 is independent of cask design.

A11.1.11 TEST CONTROL

The information in Section 11.1.11 is independent of cask design.

A11.1.12 CONTROL OF MEASURING AND TEST EQUIPMENT

The information in Section 11.1.12 is independent of cask design.

A11.1.13 HANDLING, STORAGE AND SHIPPING

The information in Section 11.1.13 is independent of cask design.

A11.1.14 INSPECTION, TEST AND OPERATING STATUS

The information in Section 11.1.14 is independent of cask design.

A11.1.15 NON-CONFORMING MATERIALS, PARTS OR COMPONENTS

The information in Section 11.1.15 is independent of cask design.

A11.1.16 CORRECTIVE ACTION

The information in Section 11.1.16 is independent of cask design.

A11.1.17 QUALITY ASSURANCE RECORDS

The information in Section 11.1.17 is independent of cask design.

A11.1.18 AUDITS

The information in Section 11.1.18 is independent of cask design.

A11.2 QUALITY ASSURANCE PROGRAM – CONTRACTORS

A11.2.1 ARCHITECT-ENGINEER

The information in Section 11.2.1 is independent of cask design.

A11.2.2 CASK SUPPLIER

The information in Section 11.2.2 is independent of cask design.

A11.2.3 CONCRETE STORAGE PAD CONTRACTOR

The references list in Section 11.2.3 are independent of cask design and there are no additional references associated with Section A11.

A11.3 REFERENCES

The references listed in Section 11.3 are independent of cask design and there are no additional references associated with Section A11.