Official Transcript of Proceedings

NUCLEAR REGULATORY COMMISSION

Title: Advisory Committee on Reactor Safeguards
571st Meeting: OPEN SESSION

Docket Number: (n/a)

Location: Rockville, Maryland

Date: Thursday, April 8, 2010

Work Order No.: NRC-170 Pages 1-113

NEAL R. GROSS AND CO., INC.
Court Reporters and Transcribers
1323 Rhode Island Avenue, N.W.
Washington, D.C. 20005
(202) 234-4433

DISCLAIMER

UNITED STATES NUCLEAR REGULATORY COMMISSION'S ADVISORY COMMITTEE ON REACTOR SAFEGUARDS

The contents of this transcript of the proceeding of the United States Nuclear Regulatory Commission Advisory Committee on Reactor Safeguards, as reported herein, is a record of the discussions recorded at the meeting.

This transcript has not been reviewed, corrected, and edited, and it may contain inaccuracies.

UNITED STATES OF AMERICA

NUCLEAR REGULATORY COMMISSION

+ + + + +

571ST MEETING

ADVISORY COMMITTEE ON REACTOR SAFEGUARDS

(ACRS)

+ + + + +

OPEN SESSION

+ + + + +

THURSDAY

APRIL 8, 2010

+ + + + +

ROCKVILLE, MARYLAND

+ + + + +

The Advisory Committee met at the Nuclear Regulatory Commission, Two White Flint North, Room T2B3, 11545 Rockville Pike, at 8:30 a.m., Dr. Said Abdel-Khalik, Chairman, presiding.

COMMITTEE MEMBERS PRESENT:

SAID ABDEL-KHALIK, Chairman

J. SAM ARMIJO, Vice Chairman

JOHN W. STETKAR, Member-at-Large

SANJOY BANERJEE

DENNIS C. BLEY

MARIO V. BONACA

COMMITTEE MEMBERS PRESENT: (cont.)

CHARLES H. BROWN

MICHAEL CORRADINI

DANA A. POWERS

HAROLD B. RAY

MICHAEL T. RYAN

WILLIAM J. SHACK

JOHN D. SIEBER

CONSULTANTS TO THE ACRS PRESENT:

THOMAS DOWNER

GRAHAM WALLIS

NRC STAFF PRESENT:

MAITRI BANERJEE

EARL LIBBY

GETACHEW TESFAYE

JASON CARNEAL

STEPHEN PHILPOTT

PETER YARSKY

ALSO PRESENT:

BRIAN McINTYRE

TIMOTHY STACK

JIM HARRISON

TABLE OF CONTENTS

PAGE

Opening Remarks by ACRS Chairman:

Opening Statement 4

Items of Current Interest 6

Draft Final ISG DC/COL-ISG-016:

Remarks by Subcommittee Chairman 8

Selected Chapters of the SER with Open Items

Associated with Review of the USEPR

Design Certification Application:

Remarks by Subcommittee Chairman 11

Discussion with NRC Staff and AREVA 12

P R O C E E D I N G S

(8:28 a.m.)

CHAIRMAN ABDEL-KHALIK: The meeting will now come to order.

This is the first day of the 571st meeting of the Advisory Committee on Reactor Safeguards. During today's meeting the Committee will consider the following:

One, draft final interim staff guidance DC/COL-ISG-016, "Compliance with 10 CFR 50.54(hh)(2) and 10 CFR 52.80(d);

Two, selected chapters of the Safety Evaluation Report with open items associated with the review of the U.S. Evolutionary Power Reactor Design Certification Application;

Three, Supplement 3 to General Electric Topical Report NEDC-33173PA, "Applicability of GE Methods to Expanded Operating Domains; and

Four, preparation of ACRS reports.

A portion of the session on draft final

interim staff guidance DC/COL-ISG-016, "Compliance with 10 CFR 50.54(hh)(2) and 10 CFR 52.80(d)," may be closed to protect unclassified safeguards information applicable to this matter.

Also, a portion of the session on selected chapters of the SER with open items associated with the review of the Evolutionary Power Reactor Design Certification Application and the session on Supplement 3 to GE Topical Report NEDC-33173PA, "Applicability of GE Methods to Expanded Operating Domains," may be closed to protect proprietary information applicable to these matters.

This meeting is being conducted in accordance with the provisions of the Federal Advisory Committee Act. Ms. Maitri Banerjee is the Designated Federal Official for the initial portion of the meeting.

We have received no written comments or requests for time to make oral statements from members of the public regarding today's sessions.

There will be a phone bridge line at today's meeting. To preclude interruption of the meeting, the phone will be placed in a listen in mode during the presentations and Committee discussions.

A transcript of portions of the meeting is being kept, and it is requested that the speakers use one of the microphones, identify themselves, and speak with sufficient clarity and volume so that they can be readily heard.

I will begin with items of current interest. It is with great joy and pride that I announce that Professor George Apostolakis, a member of ACRS since June 1995, will be sworn in as an NRC Commissioner on Friday, April 23rd. For the past 15 years, Professor Apostolakis has made numerous significant and lasting contributions to the safety and regulation of nuclear power plants in the United States, particularly in the areas of probabilistic assessment, cyber security, digital instrumentation and control, and fire protection.

He was instrumental in the advancement of risk-informed regulations, including the application of defense in depth in a risk-informed context; the development of the risk-informed decision making process; and preparation of the landmark Regulatory Guide 1.174.

Dr. Apostolakis served as ACRS Chairman in 2001 and 2002.

His professionalism, dedication, sense of humor, attention to details, trenchant comments, ability and willingness to handle highly complex technical issues and regulatory matters, and enthusiastic and energetic participation in the Committee's discussions will be greatly missed. We all wish him well in his new assignment and are confident that he will discharge his duties with honor and distinction.

George is not here, but I'm sure he wouldn't mind if applaud him in absentia.

(Applause.)

CHAIRMAN ABDEL-KHALIK: Ms. Jenny Gallo, ACRS Director for Program Management, Policy Development and Analysis, PMDA, has been selected to receive the NRC Meritorious Service Award for 2010. This award is presented to individuals who have distinguished themselves in service to the federal government throughout their careers.

Ms. Gallo began her career with the NRC nine and a half years ago and has been working for the federal government since 1989. Throughout her service to the NRC and the American public, Ms. Gallo has always demonstrated remarkable leadership skills,

team management and motivation, and goal oriented performance management.

During her tenure at the ACRS, she has consistently exercised prime skills in development of progressive strategies that have improved the efficiency and effectiveness of office processes. Under Ms. Gallo's leadership, PMDA is performing in an outstanding manner in a demanding and rapidly evolving environment.

Please join me in congratulating Jenny Gallo on this significant career recognition.

(Applause.)

CHAIRMAN ABDEL-KHALIK: At this time, we will begin with the first item on the agenda, dealing with DC/COL-ISG-016 and our colleague, Dr. Mario Bonaca, will lead us through that discussion.

MEMBER BONACA: Thank you.

I'm Mario Bonaca, the Chairman of the ACRS Subcommittee on Safeguards and Security. Ms. Banerjee is the Designated Federal Official for this part of the meeting.

This is an open and closed meeting under the provisions of the Sunshine Act to allow discussion of sensitive and classified and safeguards

material. We will go into the closed session after my opening remarks. Participation in the closed portion of the meeting is restricted based on a list prepared by the DFO. Any personnel not on the list and who do not have the proper level of clearance and the need to know would have to leave the room once the closed portion of the meeting starts.

I ask the staff to verify. Also, please make sure that any electronic devices, like the cell phones which could be used for recording and transmission, are left outside this conference room.

The purpose of today's meeting is to hear presentation from the staff regarding draft final Interim Staff Guidance DC/COL-ISG-016, "Compliance with 10 CFR 50.54(hh)(2) and 10 CFR 52.80(d), loss of large areas of the plant due to explosions or fires from beyond design basis event. This ISG was prepared to provide implementation guidance for the new rule for the applicants for new nuclear power reactors beyond that provided in NEI Guidance Document NEI06-12, which the ISG endorses with some exceptions and clarifications.

The ISG was issued with public comment with the comment period expiring on November 19th,

2009. The Committee had been intimately involved in and made valuable contributions to the development of the requirements now defined in 50.54(hh), which were imposed on the operating power reactor licensees by NSC orders.

The Commission in an SRM, dated December 17th, 2008, stated that the staff should have the ACRS review the implementation guidance for the portions of the security rulemaking within the Committee's scope. Following this directive, we were provided a copy of the draft final ISG on March 8th.

At that time the ISG was going through the NRC monitoring concurrence review. Hence, I asked the staff to confirm that no substantive changes were made to the ISG after it was provided to the ACRS.

MR. LIBBY: That is correct. No substantive changes have been made to ISG-016 since they were submitted to ACRS in March.

MEMBER BONACA: Excellent. Thank you.

As this meeting is being transcribed, I request that participants in this meeting use the microphones located throughout the meeting room when addressing the Subcommittee. Participants should

first identify themselves and speak with sufficient clarity and volume so that they can be readily heard.

I'm asking now Mr. Earl Libby of NRO to begin the staff presentation.

MS. BANERJEE: Excuse me, Mr. Chairman.

This is Maitri Banerjee.

Excuse me. Can I just go out and check with the security guard to see if anybody came in who are not on the list? Because I asked for them to take down the names.

MEMBER BONACA: Yes, please.

MS. BANERJEE: And I ask the presenters to put their name tents up.

Thank you.

CHAIRMAN ABDEL-KHALIK: Thank you.

MS. BANERJEE: We are okay to proceed, Mr. Chairman.

MEMBER BONACA: Okay. We can proceed.

(Whereupon, at 8:39 a.m., the meeting adjourned to closed session, and at 10:28 a.m. reconvened in open session.)

CHAIRMAN ABDEL-KHALIK: We're back in session.

At this time we will consider Item 3 on

the agenda, selected chapters of the Safety Evaluation Report with open items associates with the review of the U.S. Evolutionary Power Reactor design certification application.

And Dr. Powers will lead us through that discussion.

Dr. Powers.

MEMBER POWERS: Thank you.

Many of you have noticed certification of new reactor designs occupies an increasing fraction of our subcommittee meeting time, and many of those are of the passive persuasion, but now they have a plant that they were going to look at that is active and, more importantly, that are actually being built around the world. So they're really interesting plans. We're going to discuss a little bit about the EPR.

To start our discussion, I'm going to ask Getachew Tesfaye to give us some introductory comment, and then we'll move to presentations by both the applicant and the staff.

MR. TESFAYE: Good morning, everyone. My name is Getachew Tesfaye. I'm the lead project manager for the EPR Design Certification Project.

In a six phase review, we are currently more than halfway through Phase 3. We also at the same time are completing Phase 2 for some of the chapters, but today we will give you a high level summary of the presentation we've made to the Subcommittee prior to this week. There will be seven chapters that we will be going over, and I have with me all of the chapter PMs to support any discussion you may have.

With that, Mr. Chairman.

MEMBER POWERS: Thank you.

As Getachew indicated, we are going through this in a phased approach and we have looked at a variety of chapters. What I have asked people to do in their presentations is to give you a fairly high level view of the chapters we're going through and our strategy for going through the remainder, and we have before us a veteran of appearances in front of this Committee, and he's not going to talk about AP-1000 or 600 or any other number of AP, right?

MR. McINTYRE: Right.

MEMBER POWERS: In fact, he has vowed that he has thoroughly enjoyed not speaking in front of the Subcommittee. So this is kind of his maiden

voyage here on this particular reactor.

Brian, I turn the floor to you.

MR. McINTYRE: Thank you, Dr. Powers.

AREVA is very happy to be here, and as Dr. Powers said, I'm very surprised to be here again.

(Laughter.)

MR. McINTYRE: It's not a bad thing. I dearly kind of miss you guys. That was --

(Laughter.)

MR. McINTYRE: That was ten years and 44 meetings. We did get to know each other reasonably well. And I would say in the ten years since I have not been here that the review process has really matured, and I think for the better, and I think a lot of that is on the part of the staff. They've come up with a six-phase review, and a lot of that is, I think, just defensive to get things more planned and make sure that it moves along, that things get done so that the applicant knows what to expect.

We are exactly halfway through the Phase 3 subcommittee meetings of the 19 chapters. So we're nine and a half chapters in, and we didn't complete Chapter 19. We just did the PRA part. The PRA

severe accident is scheduled for the 21st of April. We have a one-day session, and the chapters we're doing are two, four, five, eight, ten, 12, and 17.

Those weren't selected in random order even though it did sort of look like when we were going through it that they were in random order, but that was, I think, part of the improvement of the process is when the chapter is done, it is put on the shelf. We don't continue to talk about it and review it.

And I think that is absolutely super because I'm the project manager now, and I worry about how much I'm spending on this. So it eliminates the money I'm spending not only on my end, but I'm paying the staff and the ACRS to review it. So my focus is on --

MEMBER POWERS: We were going to ask for a raise, too.

MR. McINTYRE: I know how much I pay. I'm sure it doesn't all translate.

(Laughter.)

MR. McINTYRE: So it doesn't on my end either. So that covers our introduction. Tim Stack is going to provide just a general overview of the

plant. We were here in 2008, and it's time to get refreshed on that just to talk about the EPR in general, and then I'm going to do a real high level summary of the application at the very end and talk about the seven chapters that have been completed.

We're not going to talk about the two chapters that were done on Tuesday. So we're just going to do the seven that we're basically through, and we're not going to do the half of 19 until 19 is all done.

And with that, Tim.

MR. STACK: Thank you, Brian.

And as Brian said, I'm Tim Stack from Areva. I'm the manager of technical integration in the EPR. I've been working on the EPR since 2005, and I'm responsible for EPR technology at a high level of technology.

As Brian indicated, again, we'll give an overview on the overall design. When we go through the individual chapters we'll try to highlight some of the key differences in those individual chapters versus typical PWRs. So we'll try to build it on a differential basis.

When we got started in the EPR

development, which began in the early '90s, we really wanted to build an evolutionary design. We didn't want to go after a passive plant design. We wanted to build on years of experience of what we've learned, and basically you have a design that builds on what did we learn plus what should we be doing differently to raise the standards of the plant to move to the future.

And the major objectives were really looking at improving economics for our customers, as well as improving safety for our customers, the staff and the public as far as the design is concerned.

With regards to the safety aspects, I'm not going to cover all of the points. Some of the key points though, we wanted to increase design margins in the design itself. We have increased redundancy and physical separation of our safety trains versus the operating plants, and I'll go into that in more detail as we move on.

We wanted a reduction in core damage frequency versus what the previous operating plants had achieved, and we wanted to have features to accommodate severe accidents from the design stage moving forward, as well as accommodating external

hazards from the original design phase, predominantly aircraft hazards and explosion pressure waves.

So that's what we set out to do with the overall EPR design. This slide really covers the major design features, and we'll go into a number of these in more detail as we move on. And, again, this one is broken into what do we have in the nuclear island. What have we done from an electrical design and what have we done from a site characteristics perspective?

And the best way to really look at this is kind of a comparison. Where are we similar to a typical PWR, and this isn't necessarily all, but this is really where are we similar and, more importantly, where are we different with regards to the EPR?

So this is mainly a contrasting way of looking at the plant, and when we look at the nuclear island again, we have a proven four-loop design. Again, that's proven through the U.S., France and Germany of large, four-loop PWRs. So we're very similar in that regard.

Then when we move on we have four trains of safety systems for our major front line safety systems. Most plants typically have two. We have a

double containment. Most plants typically have a single containment.

We have an in containment borated water storage tank. Most plants have an outside containment BWST or RWST. That allows us to get rid of one of the major operator actions to swap over to the sump for LOCA mitigation, which is one of the dominant sequences in the PRAs of the existing plants as being problematic.

We have severe accident design features built into the design from the ground up versus the operating plants having them backfit. We have separate safety buildings for each of our safeguards buildings versus having them consolidated into a nuclear auxiliary building where you have all of your safeguards divisions in one building.

We have an advanced control room design that's digital versus analogue design. Within the context of the electrical world, we --

MEMBER BLEY: Tim, on your four train safety systems, are they 100 percent; each train is 100 percent for all of your accidents?

MR. STACK: When we sit back and we look at our four train systems, we really look at them

more from the standpoint of what's an N plus two design. Some of the functionality is not purely 100 percent, and I'll cover that in a little more detail.

MEMBER BLEY: Okay.

MR. STACK: If that's okay.

MEMBER BLEY: That's fine.

MR. STACK: Thank you.

In the electrical design we have the ability to accommodate a load rejection from 100 percent power back to house load versus the operating plants, which would typically trip. There would be a reactor trip from 100 percent load rejection.

We've got four trains of emergency diesel generators versus typically two trains, and then we have smaller, diverse SBO diesel generators to support station blackout as well as other severe accident scenarios.

Finally, on the site characteristics, we are designed for airplane crashes, both military and commercial, and we're designed to accommodate explosion pressure waves. In general, we see a number of major upgrades that look at where has the U.S. regulatory arena gone, as well as where has Europe predominantly gone moving forward.

When we look at the -- moving on to major design features, again, phenomenally, how do we change the NSSS? What you see is, again, a really conventional four-loop PWR design. We have a single reactor vessel. We have four steam generators. We've got four reactor coolant pumps, a pressurizer, interconnecting hot and cold legs and a surge line. So from the standpoint of four-loop PWR, it looks very similar to what we've generally seen in the past.

We also increased the component volumes both on the primary and the secondary. That was really aimed at slowing down the response and increasing the operator response times.

As far as the operators are concerned, for design basis accident mitigation we have a 30 minute no operator action time for design basis accident mitigation from within the control room, 60 minutes for outside of the control room for design basis accident mitigation. So we're really trying to keep our timing up so that the operators do not have to intercede early into events.

MEMBER POWERS: Tim, I have to ask. In the DBR-1000, which has large horizontal steam

generators, thinking about your design, I mean, did you think about going to that kind of design with the large secondary volumes?

MR. STACK: Originally, early on in the original design, they really looked at what was done in France and Germany primarily. so they were looking at the N4 plants in France and the convoy plants in Germany. Typically what we have generally seen, the horizontal generators have really not been used in the commercial applications, and really this was building from what do we want from a commercial application.

Part of it, as well, is really configuration of the containment and the size of the containment. We didn't want the overall footprint of the containment to be too large. Typically when you go to the horizontal generators, you're into a larger footprint. So it wasn't --

MEMBER POWERS: I admit I don't know exactly what the footprint on the 1000 is, but it's not huge, and at least the IAEA seems to be very enthused about these horizontal steam generators. So I was just -- I mean, what you're saying is that didn't figure into the panoply of what we've learned

when you set this design up.

MR. STACK: And, again, even in terms of part of that experience, part of it was also the corporate experience of AREVA looking at what we drew our experience from, and some of the problems you have. Just changing orientation may not seem like it's --

MEMBER POWERS: Oh, I imagine.

MR. McINTYRE: -- a huge change, but again, we really wanted to build from the experiences we had though.

MEMBER POWERS: Yeah, I'm sure there are downsides to horizontal steam generators that I'm certainly not aware of, and I don't know how publicized they are, but they certainly have a certain je ne sais qua, shall we say?

CHAIRMAN ABDEL-KHALIK: But the volume of the various components has been increased, and presumably that's to increase the time available for no operator action.

MR. STACK: Yes.

CHAIRMAN ABDEL-KHALIK: But what is the ratio between the volume and the thermal power vis-a-vis that of a four-loop plant?

MR. STACK: Unfortunately, I have a back-up slide where I can go and show you or we can provide you a back-up slide where we look at increases in volume versus megawatt thermal and the improvements that we have in those.

Perhaps one of the best ways to look at some of the operator action times, my experience -- and I grew up through the B&W plants -- and you look at time to boil the secondary inventory dry --

CHAIRMAN ABDEL-KHALIK: Which is not a good example.

(Laughter.)

MR. STACK: Just bear with me.

So when you look at a once through generator, you're looking at a few minutes. When you're looking at a typical plant with recirc generators, you're looking on the order of 30 minutes, 30 to 40 minutes perhaps. Here we're looking at over an hour to boil the generators dry such that we have a significant improvement in the time to boil dry, even compared to plants with recirc generators.

MEMBER BANERJEE: Have the volumes of the piping also been increased like the hot legs, the

cold legs, the loop seals?

MR. STACK: Generally not. You're typically looking at sizing on velocities, and those lines would be pretty similar to what you've seen in the past.

MEMBER BANERJEE: So the diameter of the pipe has been increased to accommodate the increased power?

MR. STACK: The diameter of the pipes are really being set based on the reactor coolant flow rate and the velocities that you want to have in the reactor coolant lines.

MEMBER BANERJEE: So let me just ask the question. So let's say this is a four-loop plant, right? And the diameter of the hot leg in comparison to the power produced, is that the same ratio as, say, in other forms of plants or is it different?

MEMBER SIEBER: It's close.

MR. STACK: It's going to be close because what you're setting the hot leg diameters are really being set to set the velocity that you want in it. So you're looking at the total reactor coolant flow rate that you have in the loops and looking at what velocity do you want.

The total reactor coolant flow rate is really going pretty much proportionally with power.

MEMBER BANERJEE: So what is the diameter of the hot leg?

MR. STACK: Off the top of my head -- Brian? -- I'm going for -- I can come back and get you that. I have that also in one of my back-up slides.

MEMBER BANERJEE: Because this is a crucial question because you depend on secondary side pulling the pressure down to get, you know, the pressure down. You don't have a hot leg system or high pressure injection system.

MR. STACK: Typically though when you look at the sizing of the hot legs and cold legs, again, in the operating plants they're generally set by what velocity can you support.

MEMBER BANERJEE: Right, and my concern is more reflux condensation. It's a different problem.

MR. McINTYRE: And we're setting up a special meeting to chat about that.

MEMBER BANERJEE: I just wanted to understand.

MR. STACK: Any further questions on this?

CHAIRMAN ABDEL-KHALIK: I guess I'm just wondering based on the response to the previous two or three questions are you prepared to give any specific numerical answers to any of the questions that will come up or is this sort of a general sort of descriptive --

MEMBER POWERS: Yeah, I specifically asked them to stay in a fairly general level.

CHAIRMAN ABDEL-KHALIK: Right.

MEMBER POWERS: They're doing what I told them to do, fairly high level, because we do have meetings scheduled to go into the gory details.

CHAIRMAN ABDEL-KHALIK: Do you have anybody here who would be able to answer specific questions that may come up?

MR. STACK: Right at this point in time we have Brian and myself. In some of these, in some of our backup slides what I can do is get you some of your answers specifically. Beyond that, we can take additional questions and get back to you.

CHAIRMAN ABDEL-KHALIK: Okay.

MR. STACK: Okay.

MEMBER BANERJEE: Also we'd be interested in what's happening in the lower plenum and, you know, the distribution system, all the gory details.

MEMBER POWERS: And in all fairness, I did not ask them to do it. I specifically directed them not to go into the gory details because (a) there isn't time and (b) you're going to get to see this several more times.

MEMBER BANERJEE: All right, Dana. That's a promise.

MR. McINTYRE: And I think a lot of the stuff that you're interested in when we get to Chapter 15, we'll be front and center for that part of the discussion. The chapters that we've been through that we came to talk about, I don't want to say they're irrelevant, but not as important.

MEMBER BANERJEE: Sure.

MR. TESFAYE: In addition, we also plan to come in front of the Subcommittee to discuss the reflux condensation you just mentioned. We plan to come and present to you before Chapter 15.

MEMBER BANERJEE: Oh, you are?

MR. TESFAYE: Yes.

MEMBER BANERJEE: I didn't know that.

When did that get slipped into the agenda?

MR. TESFAYE: It's not in the agenda yet, but we're planning to put it on the agenda.

MEMBER BANERJEE: Oh, all right.

MEMBER CORRADINI: That will teach you.

CHAIRMAN ABDEL-KHALIK: Please proceed.

VICE CHAIRMAN ARMIJO: As you go through this, I'd appreciate it if you'd just point out if there are any significant differences between the design we're talking about here and the plant that's being constructed in Finland.

MR. STACK: Okay.

VICE CHAIRMAN ARMIJO: As you go along, if there are big differences or significant differences, just kind of point that out.

MR. STACK: Okay. Just in general, when you look at the major design features level, they actually have additional diesel generators because of some of their design requirements, well, additional diesel generators as well as combustion turbines because, yes, Dana, because of some of the design provisions that they have.

Absent that, the major design features are really the same as OL3.

MEMBER POWERS: That's what you guys need is more diesel generators.

MR. STACK: That's what we were thinking.

VICE CHAIRMAN ARMIJO: The Finns wanted additional?

MR. STACK: They had an additional diesel generator to support investment protection on the turbine island. They also had an additional combustion turbine generator.

MEMBER POWERS: I'm pretty sure that's just exactly a refinement your plant needed. All right. Please go ahead.

MR. STACK: Okay. We talk --

MEMBER SIEBER: Let me ask a question about component sizes. I'm not asking for specific numbers. To me one of the important ones is the accumulator size and each plant reactor power output. Could you in general describe the differences between the accumulators in this?

I notice all of the times are longer. So they must be bigger. Do you know on roughly a percentage basis how much bigger they are? And do they have any special features that control the flow?

MR. STACK: Okay. I'll have a slide

covering the accumulators. Off the top of my head, I do not have a proportion on the size of the accumulators. However, when you look at most of the pumped ECCS systems, they tend to be smaller than what you would see on many of the operating plants. That's more of an evolution in the designs, understanding what do you really need to do to accommodate your LOCAs.

So, for example, when you look at low head safety injection, it's smaller than you would typically see on many of the operating plants, but again, that's more of an evolution of understanding how the designs progress and really matching the ECCS requirements to the accident mitigation.

MEMBER SIEBER: Do you have an off the top of your head number for peak clad temperature for a full LOCA?

MR. STACK: Brian, do you know what that one is off the top of your head?

MR. McINTYRE: I think it's in the 15s.

MEMBER SIEBER: Okay. Thank you.

MR. STACK: Okay? Four-train concept, yes, we'll move on. Generally what you have in here, and let me get you oriented; here we're going to show

and I'll explain the four-train concept for you. What you see in this, we have the reactor building here; the fuel building is down here. Then we have Safeguards 1, 2, 3 and 4. The turbine building is up here for orientation for you. What you see is we have physically separate safeguards buildings. So basically that really improves your mitigation of any internal hazards like fires, HELBs, flooding, where it confines it to a single safeguards building versus the operating plants where you're into multiple divisions in the aux building.

When we look at the N plus two concept, what we have is basically you can take a single failure in this train; you can have this train down for preventive maintenance; in the third train you can have the train, you can have the train impaired by the initiating event.

So, for example, if you have an ECCS line break, it's going to impair the ECCS function of that train. However, that's the only function of that train that it will impair. Other aspects of it that are unaffected by the initiating event are credited. So, for example, removing heat from the sump fluid by that train is still active and credited.

And then finally, you would have your fourth train providing the accident mitigating function. In general, when you look at this, we have two trains that are going to be energized and ultimately supporting the accident mitigation, and that's really the overall architecture of how the N plus two design works.

In the purest sense we don't necessarily like to look at it as four by 50 or four by 100 per se.

MEMBER BLEY: But for some accidents you're probably 100 percent from one of them and for certain things you need the extra help from a second one.

MR. STACK: Yes.

MEMBER CORRADINI: That's what I was trying to understand in answering his question. So for some accidents you need only one. For some accidents you need as many as two, but you never need three.

MR. STACK: That's correct.

MEMBER BLEY: And you might not need the whole two.

MR. STACK: Right.

MEMBER BLEY: Part of it is impaired.

MEMBER CORRADINI: Sorry?

MEMBER BLEY: Part of it could be impaired by the initiating event.

MEMBER CORRADINI: Right, but I guess what I'm trying to say is if the purple one is out, I could get along with yellow and green.

MR. STACK: Yes.

MEMBER CORRADINI: And if the red one is out, but I still have a spare is, I guess, what I'm trying to understand.

MR. STACK: Well, part of what happens in it though is we are crediting -- let's take the example of the ECCS line break. In order to insure that you're fulfilling your accident mitigating function, they're not cross-connected. Okay? So in order to make sure that you fulfilled your accident mitigating function, you basically have to energize two divisions, one that feeds the break and the other that's providing the accident mitigating function.

MEMBER BLEY: Let me try just a little differently. I'm assuming that in your Chapter 15 analysis. One's working and one might be degraded. In your PRA you might have done additional analysis

and gone down to one train in some cases?

MR. STACK: In the PRA, they would look at the type of event and what is really required to mitigate it more from a realistic perspective versus a Chapter 15 design basis accident perspective.

MEMBER BLEY: But the Chapter 15 is always kind of one-plus.

MEMBER CORRADINI: Right.

MR. McINTYRE: One is deterministic and the PRA is looking at what's the success. How many can you get by with?

MEMBER BLEY: But every analysis in Chapter 15 is this one-plus analysis.

MR. STACK: As it's appropriate for the design of the systems, yes.

MEMBER BLEY: Okay, okay.

MEMBER CORRADINI: I think, to say it differently, just to make sure I'm on board with Dennis' clarification, it is as he said. One is feeding the break and one is essentially mitigating the accident under the DBA because of the way you have two connected to any one input line.

MR. STACK: Yes, and what I'd like to do is I'll clarify it a little further when we have --

MEMBER CORRADINI: That's fine.

MR. STACK: -- more of a --

MEMBER CORRADINI: You can do that, but I just wanted to clarify here. That's fine. I'm happy.

MEMBER BROWN: I'm presuming absent all the failures, are they all initiated on any particular ECCS demand? Would they all come on, all four trains?

MR. STACK: They're all demanded on, yes.

MEMBER BROWN: Okay. So there's no prioritization.

MR. STACK: There's no prioritization. They're all demanded just like in the operating plants.

MEMBER BROWN: Okay. Thank you.

MR. STACK: Oh, one of my favorite slides, the safety systems. What we have, and here we're really looking at the main safety systems really covering the primary slide. The next slide will show really what we have on the secondary side, and what you see is really we have four trains of safety systems with needing that safety injection in a combined low head safety injection and RHR. We

have -- and I'll go through this in some more detail -- we have an in containment refueling order storage tank, which you can see down here, and again, that's really providing benefits from the standpoint of not having to swap over to the sump if the RWST was outside containment just like on the operating plants.

We have two trains of extra borating system that are not shown in this figure that are powered from two of the divisions.

MEMBER BLEY: So your IRWST is actually the sump?

MR. STACK: Yes.

MEMBER BLEY: Okay.

MR. STACK: Okay? What I'll do is I'll go through the line-ups and just show you how this is going to be lined up on this side, and first we'll cover the safety systems, and what we see, first we'll look at MHSI, and one of the things that's first notable about MHSI is that it takes suction directly from the IRWST.

One of the improvements versus the operating plants, typically when you look at the medium head safety injection or the high high-head

safety injection on the operating plants, it can't take suction directly from the sump. They have to be piggybacked through the low-head safety injection. That has been eliminated in this such that they can take suction directly from the sump, which is an improvement, and let's you look on the MHSI and they'll take suction from the sump. They'll inject to a cold leg. There will be an accumulator on each of the cold legs.

If this was the broken cold leg what you would find is, again, the flow from this would be diverted back to the sump, and that would be lost for injection capability, and that's basically the alignment on MHSI.

When you look at the LHSI, again, we take suction from the IRWSD --

CHAIRMAN ABDEL-KHALIK: How low is the shutoff head for the medium-head safety injection compared to the saturation pressure at the hot leg temperature?

MR. STACK: The MHSI pumps are in the 1,400 pound range, shutoff head. So they're pretty typical of what you -- give or take, they're pretty typical of what you see on the operating plants that

have medium-head safety injection.

MEMBER CORRADINI: So what you don't have here is the charging pumps essentially providing high head flow.

MR. STACK: We have charging pumps, but they're not safety related. They perform no safety related functions.

MEMBER BLEY: Are they similar to the charging pumps in existing plants?

MR. STACK: yes.

MEMBER BLEY: They're centrifugal pumps?

MR. STACK: Yes.

MEMBER BLEY: About the same head?

MR. STACK: They're, again, very similar to what you would see in the operating --

MEMBER BLEY: But they don't get a start signal?

MR. STACK: But they don't get a start signal, and that's not uncommon for many of the plants that are out there with this type of ECCS design.

CHAIRMAN ABDEL-KHALIK: The charging pumps are centrifugal pumps rather than positive displacement pumps?

MR. STACK: Yes, and that's pretty typical of many of the operating plants. The extra borating system pumps are just small positive displacement pumps.

MEMBER BLEY: Are the accumulators in the European plants?

MR. McINTYRE: Yes.

MR. STACK: When you look at the alignment on the LHSI, what you have is basically suction, again, off the sump through the pump, and then it's going to go through an RHR cooler. This is going to reject heat to the component cooling water system, then out to the essential service water system, then out to our cooling towers to get it all the way out to the ultimate heat sink.

What's happening in here on this, it's also removing any heat from the fluid that's taken from the sump. So, for example, when we look at the N plus two, that function is still going to be fulfilled if that's an energized division. Okay? The function of removing heat from the sump from that train is not impaired if I break this cold leg here. So we will take credit for that in our analysis because it's functional.

MEMBER CORRADINI: I'm sorry. I listened. I tried to listen carefully, but can you just repeat that again? I'm sorry.

MR. STACK: Okay. Let's say that this was the broken -- let's say I had a break in this cold leg.

MEMBER CORRADINI: Got it.

MR. STACK: Okay? If I have a break in this cold leg, basically it means that I'm going to lose the injection flow from the accumulator. I'm going to lose the injection flow from this MHSI pump, and I'm going to lose the injection flow from this LHSI pump.

However, just because this is a broken cold leg, I can still take suction from here, pump it through this LHSI pump and this RHR cooler and remove heat from the fluid in the sump.

MEMBER CORRADINI: Oh, okay, okay. Thank you.

MR. STACK: So we're taking credit for what is really available versus just arbitrarily saying, well, the whole division has failed, and we're not going to credit it at all. Okay?

MEMBER CORRADINI: Okay. Thank you.

MR. STACK: You're welcome.

MEMBER SIEBER: Why wouldn't you put the heat exchanger upstream of the pump?

MR. STACK: On most of these, typically what happens on anything that's sitting on the suction to the IRWST, you're always going to have MPSH challenges on the pump, and the last thing you want to do is add resistance on the suction side of the pumps.

MEMBER CORRADINI: But that's because of your design philosophy. You're not feeding from low head to higher head, right?

MR. STACK: Right.

MEMBER CORRADINI: I mean, you said that as an advantage, but to take advantage of that, you have to put the heat exchanger downstream of the pump.

MR. STACK: Typically, I'm not sure if I've seen any of the operating plants where they ever put the heat exchangers on the suction of the pumps.

MEMBER CORRADINI: Well, that's true. Okay.

MEMBER POWERS: I don't know why you would do that.

MR. STACK: It's extremely difficult to add resistance on the suction of the pumps.

MEMBER CORRADINI: I'm just trying to think of a lineup for an older plant where the low-head pump feeds the higher head pump, and I'm trying to think if there was a heat exchanger. I thought there was, but you're probably right.

MEMBER BLEY: Well, maybe between them.

MR. STACK: There is typically.

MEMBER BLEY: I don't remember where the top off is to the higher pump. It's before the heat exchanger?

MR. STACK: Typically what you would find if it was one of the operating plants, you would see -- what you would see is you'd take suction off the sump. You'd go through the LHSI pump, the RHR heat exchanger, and then it would tie back right here to the suction of the MHSI pump.

MEMBER CORRADINI: Right. That's right.

MR. STACK: And that would be the typical piggyback line-up that you would normally see.

MEMBER CORRADINI: Thank you.

MR. STACK: That arrangement, again, is pretty typical on the heat exchanger side.

MEMBER CORRADINI: Thank you.

MR. STACK: So on the LHSI side though what we will have in here is, again, it will come out of the RHR cooler, and then we will go and pump through the cold leg. An alternate alignment is to go and align it through the hot leg for hot leg injection, and that's basically covering what you generally see on the LHSI and RHR from a safety perspective.

In addition, in one train we have a non-safety containment spray for severe accident heat removal. It's basically cooling the corium in the inside containment. It's also spraying down the containment for depressurization.

MEMBER POWERS: Do the Finns require that to be safety grade?

MR. STACK: Their classifications don't exactly match up, but yes.

MR. McINTYRE: And they have two trains.

MEMBER POWERS: And how is it being treated in France?

MR. STACK: Their classification systems are different yet again. I'll be honest with you, Dana. Off the top of my head, I forget how they're

doing it in France.

MEMBER POWERS: Sounds like we probably ought to go visit and find out.

MR. STACK: I think a visit is well in order.

MEMBER POWERS: We'd better.

MR. STACK: I think one phone call will solve it, but --

PARTICIPANT: One pump.

MR. STACK: Clearly for severe accident mitigation, beyond design basis.

PARTICIPANT: The blue.

MR. STACK: The blue.

MEMBER CORRADINI: But I guess my memory is that in France it's similar to the Finns, although a different classification. I thought it was considered safety grade to have that for the severe accident.

MR. STACK: I believe that is also true, but here it's the difference between what's at beyond design basis action here is different than how they evaluate them in Europe.

MEMBER BLEY: Is there a limit on outage time for that non-safety spray pump?

MR. STACK: Basically the unavailability of all the equipment in the end would be managed through the maintenance rule for all of the equipment.

MEMBER POWERS: Of course.

MEMBER BLEY: There would still be tech specked under your safety grade equipment.

MR. STACK: Yes.

MEMBER BLEY: But not this.

MEMBER POWERS: WE'll see.

(Laughter.)

VICE CHAIRMAN ARMIJO: The figure shows some dashed red lines to the hot legs.

MR. STACK: Yes.

VICE CHAIRMAN ARMIJO: What are they? What are those? Are those lines or --

MR. STACK: The dashed, what you see in here from the LHSI, they're really showing two things. Sorry for the busy figure. The dashed line is really showing an alternate alignment for hot leg injection. The green line is really showing the normal RHR line-up where you take it from the hot leg back into the pump and back to the cold leg..

VICE CHAIRMAN ARMIJO: Okay, but you

could actually go the other way. What is the red?

MR. STACK: What's happening is the initial line-up of the system -- a pointer here sooner or later -- the initial line-up is on cold leg injection. At nominally an hour interview, that will swap over to hot leg injection up through this path.

VICE CHAIRMAN ARMIJO: Okay.

MR. STACK: Okay?

VICE CHAIRMAN ARMIJO: I have one other question with that. When you say extra borating system, that implies to me that there's some non-extra, that is, regular borating system.

MR. STACK: What's happening is that the IRWST is borated. The extra borating system is looking at concentrated boric acid, nominally 7,000 ppm versus 1,700 or 1,800, and it's providing high concentration really that's looking at shutdown boration as well as ATWS mitigation.

VICE CHAIRMAN ARMIJO: Okay. Thank you.

MR. STACK: John, you look like you want to dive in.

(Laughter.)

CHAIRMAN ABDEL-KHALIK: Is the switch to hot leg injection automatic?

MR. STACK: No. It's manual operator action.

CHAIRMAN ABDEL-KHALIK: And because you said it's done an hour after event initiation. Is that sort of procedural guidance?

MR. STACK: That will be in procedural guidance.

We'll move over to the secondary side now, and on the secondary side, we're really just showing an architecture where there are four loops where we have nominally four trains of heat removal for each of the generators, and I'll run through this in some detail for you, perhaps a little more detail than I had planned, but please feel free to ask any questions you have.

What you see is, first --

MEMBER POWERS: Don't ever say that to them.

(Laughter.)

MR. STACK: I'm sorry, Brian. You'll survive, Brian.

MR. McINTYRE: Ask him to answer the question now that you've offered.

MR. STACK: There you go.

All right. On the secondary side, the first thing we have is a safety related main steam relief train, and what that means basically, and I'll just use this train up here, first we'll cover the steam side and then we'll cover the liquid side. What you see is in each of the steam lines you'll have the main steam isolation valve and, of course, there will be bypass valves around that you concentrate on this. Downstream of this you'd have normal turbine bypass in the connection down to the turbine.

Upstream of the MSIV you have a tap-off that has two 25 percent spring loaded safeties, which is a reduction from the number we typically would see on the operating plants, and you would have a 50 percent main steam relief train. In the main steam relief train, that's comprised of a media actuated, normally closed isolation valve and a motor operated normally open control valve, and that provides 50 percent relief capacity.

When you look at the functionality of the main steam relief train, what it is really doing is several things.

First, it's providing a portion of the

over pressure protection on the team line. So the MSRTs plus the safeties are really providing the overall over pressure protection.

The second thing that the MSRTs do is they are providing safety grade depressurization. That's used really in three ways. It's supporting LOCA mitigation by initiating a partial cool-down to allow you to lower the secondary pressure and as a result lower the primary pressure.

The second thing it's doing is it allows you to bias the set point up on the MSRT, which allows you to isolate a steam generator if you have a tube rupture, and the third thing it does is it allows you to do safety grade cool-down for Branch Technical Position 5-04, so really accomplishing several things with that safety grade depressurization path. Compared to the operating plants it's basically replacing what you see in atmospheric dump valves.

MEMBER BLEY: So you have no atmospheric dump.

MEMBER RAY: Could you touch on the second point of those three points again?

MR. STACK: Okay.

MEMBER RAY: I understand two breaks and atmospheric dumps, but what is it that you're saying that it does?

MR. STACK: What we are doing with this, and this deals with how it interacts with the medium-head safety injection, and I am sure we will again cover this more when we discuss Chapter 17 --

MEMBER BLEY: The other side of your --

MR. STACK: Well, what's happening is what we're trying to do is lower -- we're trying to -- initially we're depressurizing the secondary to facilitate the medium-head safety injection. If you have the tube rupture, what we want to do is we want to raise the set point in the valve such that the set point in the valve is higher than the shut-off head of the medium-head safety injection pump such that we're not pumping liquid through the MSRT.

So when you look at it after a tube rupture, that set point is set below the safety, the first safety on that line as well. The net effect of all of it is it allows up to bottle up the generator for a tube rupture.

MEMBER RAY: Yeah, but after you've depressurized, right?

MR. STACK: After the initial portion of the depressurization when we've sensed that we have a rupture in that one, we will raise the set point.

MEMBER RAY: Well, okay. The point is you have a steam generator tube rupture and you're going to dump to atmosphere to depressurize, and the point I guess you were making with your Item 2 was you can then stop the depressurization.

MR. STACK: Right.

MEMBER RAY: But you have depressurized following the tube rupture by definition. Okay. I understand your point now anyway.

MR. STACK: Okay?

MEMBER RAY: Yeah. It made it sound like you were only discovering you had a tube rupture after you depressurized.

MR. STACK: No, no, no, no. It's just a portion of the mitigation.

CHAIRMAN ABDEL-KHALIK: I guess I don't understand. I have the same concern you have.

MEMBER RAY: Yeah. I mean, the plant I ran with atmospheric steam dumps, you wouldn't dump to atmosphere if you had a tube rupture, but we had a high pressure safety injection pump.

MR. STACK: Right, and that's the difference in this.

MEMBER RAY: That's the difference.

MR. STACK: Is that you don't have a high high-head safety injection pump. You have a medium-head safety injection pump, and again, what's happening here is you're setting the set point. It's over 1,400 pounds. You're setting the set point of the MSRT at a value that's in excess of the shutoff head of the MHSI pump such that you can't pump through the leak and out through the MSRT.

MEMBER RAY: But you've gotten the pressure down far enough that you're getting delivery, I guess. I have got to look at the time history. I realize we're not doing that here.

MEMBER STETKAR: Tim, I've forgotten, and it may help. I get confused between the different designs. Does that reset come off an N-16 signal on the main steam line or is it -- in other words, do you reset that one selectively on an N-16?

MR. STACK: This is really for design basis accident mitigation, for the tube ruptures. The events are so slow in progression that they're all operator action, but there's an N-16 indication

as well as level in the generator to indicate it.

MEMBER STETKAR: The operator resets the set point?

MR. STACK: Yes.

MEMBER STETKAR: Back-up? Oh, okay. Like I said I got -- thanks -- I got confused between designs.

CHAIRMAN ABDEL-KHALIK: From the oil generators or after identifying the affecteds being generated?

MR. STACK: They'll only reset the set point on the affected generator.

MEMBER RAY: But this obviously has triggered a lot of interest from us here. Sorry for all of the back-and-forth, but you know, I mean, that's your barrier to containment bypass on a tube leak, is that reset isolation valve we're talking about.

MR. STACK: Yes.

MEMBER RAY: Okay. I just have to think about it is all.

CHAIRMAN ABDEL-KHALIK: But there is a time period from the time you initiate atmospheric dump and the time you get the pressure down where the

pump is, where the pressure is below the shutoff head of the pump where you're actually dumping to the atmosphere from the affected steam generator.

MR. STACK: And what has happened in the analysis, any leakage you have up till the time that you take your mitigating action is analyzed in the Chapter 15 accident. Beyond that point you're going to isolate it though. So, again, the operator action time is that 30 minutes.

CHAIRMAN ABDEL-KHALIK: Okay.

MR. STACK: Okay?

MEMBER RAY: One last question. I'm sorry. At the moment. Be patient. You would think that you would not use the affected steam generator for your depressurization, I guess.

MR. STACK: That's true.

MEMBER RAY: Is that part of the procedures?

MR. STACK: That's going to happen with those generators, in the end what we will do is transfer inventory from that generator to one or the other intact generators to get the plant all the way down and cooled down. At the end of the day we need to ultimately reduce inventory in all four generators

and get the plant down on the RHR.

MEMBER RAY: Yeah.

MEMBER BLEY: What the questions are really aimed at is during that initial time when you are dumping, but you're not dumping to atmosphere anymore. This doesn't dump to atmosphere, right?

MEMBER RAY: Sure, it does.

MEMBER BLEY: Oh, it does?

MEMBER RAY: It is at atmosphere.

MEMBER BLEY: It's a containment bypass, right? So you've got to bottle it up at the right point.

MEMBER RAY: For the initial use of the atmospheric relief you are dumping and you're accounting for that.

MR. STACK: Yes, for 30 minutes you take time for the operator action. Yes, we are taking accounting for that in the doses that we calculated.

MEMBER BLEY: And that's assuming probably one, two.

MEMBER STETKAR: Tim, do you know, does the finnish design have the features that the KONVOY plants have where the N-16 signal on that steam line resets a bunch of stuff automatically? Do you know

that? I don't know.

MR. STACK: I'm not sure of that detail, John.

CHAIRMAN ABDEL-KHALIK: Now, what do these dump valves automatically -- what signal automatically actuates those dump valves?

MR. STACK: When we look at these, the dump valve on the main steam relief train, really what they're triggering on is an SI actuation. So really their real purpose in life as far as the initial accident mitigation is really supporting safety injection. So they're starting on an SI signal, which is basically starting on low RCS pressure.

MEMBER BROWN: Do you initiate all four?

MR. STACK: All four are initiated, yes.

MEMBER BROWN: And excuse my next question. This might be ignorance speaking. I'm a Naval nuclear background, and are you dumping? When you talk about an atmospheric dump, is that outside the containment?

MR. STACK: It is.

(Simultaneous conversation.)

MR. STACK: It's outside containment,

yes.

MEMBER BROWN: For 30 minutes from the affected steam generator?

MR. STACK: Yes, yes.

MEMBER STETKAR: There will be a release to the atmosphere during a tube rupture event.

MEMBER RAY: It's either that or put in high-head safety injection pumps. That's your choice.

MEMBER SIEBER: wear your mask and use your earplugs.

MEMBER BROWN: Now, you made it sound like you've got similar type stuff on the operating plant today. Is that true?

MEMBER RAY: I can't speak for everything in the world, but this is new to my experience, but I understand it nevertheless.

MEMBER STETKAR: Remember though the emergency operating procedures for operating plants allow you to blow from the ruptured steam generator as long as the releases are analyzed.

MEMBER RAY: Well, that's why I said, John, we just need to --

MEMBER STETKAR: They allow you to. It

isn't automatic.

MEMBER RAY: We need to think about this more. It's not intuitive. This isn't the place to try to run it to ground.

MEMBER SIEBER: This ends up with a smaller release.

MR. STACK: That's correct.

MEMBER RAY: Well, it depends what you mean by a conventional plant. Not all plants, from the affected steam generator, but let's leave it that way now, right?

MEMBER SIEBER: Okay.

MEMBER BROWN: Okay. Let me further examine my level of ignorance here. Based on what Bill just told me, as long as you meet all of your dose limits, then it's just perfectly okay to blow all of the stuff out into the atmosphere --

MEMBER RAY: Yes, yes.

MEMBER BROWN: -- and have it spread around with the population.

MEMBER RAY: "Perfectly okay" isn't the word I would use.

(Laughter.)

MEMBER BROWN: Well, I mean, that's what

it sounds like. I mean we don't do this today.

MEMBER SIEBER: It's permissible.

MEMBER RAY: It's permitted.

MEMBER BROWN: I just need to discuss it later is all. This isn't --

MEMBER RAY: I will discuss it later. This sounds like a terrible idea.

MEMBER POWERS: You get a release on a steam generator tube rupture almost invariably.

MEMBER BROWN: Not if you don't blow it outside the containment. It's not as bad.

MEMBER POWERS: Pretty much ipso facto a steam generator tube rupture is going to give you a blowout.

MEMBER BROWN: As much as this?

MEMBER SIEBER: Yes.

MEMBER POWERS: And more.

MEMBER BROWN: In today's operating plants.

MEMBER POWERS: Today's plants.

MEMBER BROWN: I think that sounds like blowing smoke, but you're doing a good job, Dana. Thank you.

CHAIRMAN ABDEL-KHALIK: I guess we'll get

to see more of this when we talk about Chapter 15?

MR. STACK: Chapter 15.

CHAIRMAN ABDEL-KHALIK: So let's proceed.

MEMBER BROWN: We're taking notes.

CHAIRMAN ABDEL-KHALIK: Thank you.

MEMBER STETKAR: The interesting thing about this design though that is a bit different from the ones I've seen is that this design keeps the isolation valve closed and the control valve normally open. So when you control the cool-down, you pop the isolation valve open and you have to basically control the cool-down by throttling down on the control valve. It's a little bit different than having the isolation valve open and the control valve coming open.

Just think about Dr. Banerjee and his things about overcooling transients and stuff like that.

MR. STACK: Very good. Next I'll move on to the liquid side, and we look at our emergency feedwater trains. We have four separate trains, and when you look at a train of these, I'll just start at this one here. We have suction from an emergency feedwater tank, and this equipment is housed within

the safeguards building. There's suction from here. It's going to go directly to the suction of the pump. The pumps are nominally 400 gpm of ejection flow.

They'll then go through, if I can get my pointer to work, they'll then go through a flow control valve, a level control valve and an isolation valve in their path to the steam generators.

What I have on the last point here, you will also see cross-connects, which are normally closed on the suction side of the pump and on the discharge side of the pump, which allows you to have all your water sources available to you and allows you to connect an individual EFW pump to an intact steam generator, and that's providing more flexibility in the design that way.

And on these, these are motor driven pumps, all four of them.

VICE CHAIRMAN ARMIJO: What pressure? Are these medium pressure, high, low pressure?

MR. STACK: They're medium pressure. Nominally they're going up to -- oh, they're going up to 15 or 1,600 pounds, just somewhat higher than what you would see in the operating plants, which tend to

be in the 12 to 1,300 pound range for their shutoff head.

As far as power sources on these, you'll have, for each of these, you'll have a normal power source from an off-site source, and you'll have an emergency diesel generator backing them. In addition, two of the four have station blackout diesel generators backing them such that you have a number of sources of power to the emergency feedwater pumps.

We'll move on to protection from the external hazards. In our protection from the external hazards, what we have is in this building we're showing a portion of the containment building. There is an inner wall of the containment that's post tensioned concrete with a quarter inch carbon steel liner.

We also have an outer wall of reinforced concrete that's nominally, depending on location, give or take between four and six feet thick.

The outer shield structure is really providing protection against external pressure waves as well as airplane crashes. On our next slide, I'll show you which portions actually have this physical

protection.

And in between the outer containment or outer shield structure and the containment, there is an annulus where we have two-by-100 percent capacity filtration for dose control.

With regards to the protection from the external hazards, we've not protected all portions of the plant with a shield structure. There's a combination in protection that includes shield structure, which are shown in blue; protection by physical separation, in gray; and then no protection at all that's shown in white. And I'll go through these in a little bit more detail.

In terms of the physical protection where we have a shield structure, it includes the containment building, which was again showing diagrammatically on the previous slide; the fuel building; Safeguards 2 and 3. And in Safeguards 2 and 3, they house the main control room and the remote shutdown station. So all of those structures have a shield structure to them.

Relative to the ones that are not contained in the shield structure, we have Safeguards 1 and 4. We have the Diesels 1 and 2 on this side,

the Diesels 3 and 4 on this side, and we have the cooling towers, ultimate heat sink cooling Towers 1 and 2 down here and 3 and 4 up here.

The ones that are shown in gray are protected by physical separation such that we will never lose more than two trains from any airplane crash, whether it's into the shield structure or whether it's into an unprotected area.

MEMBER CORRADINI: I'm sorry. Maybe you said it and I just wasn't catching it. So none of the diesels are protected in the blue?

MR. STACK: None of the diesels are. Here are one and two; and here are three and four. they are not physically protected with a supplemental shield structure.

MEMBER CORRADINI: They are protected by physical --

MR. STACK: From airplane crash they're protected by physical separation. Obviously they'll have protection against tornado and missiles and things like that.

MEMBER CORRADINI: That's what I thought you meant. I didn't --

MR. STACK: Yes.

VICE CHAIRMAN ARMIJO: Why aren't Trains 1 and 4 protected by the shield building? Is the structure less rugged than the ones protecting two and three?

MR. STACK: When you sit back and look at the designs of these, this is shown in containment where you have an inner containment and an external shield building.

VICE CHAIRMAN ARMIJO: Yes.

MR. STACK: When you move down to the safeguards building and fuel building, they're similar to that. They have a supplemental shield structure which is physically separate from the normal structure of the building.

VICE CHAIRMAN ARMIJO: But you did not put that separate structure --

MR. STACK: We did not put that separate structure on one and four.

VICE CHAIRMAN ARMIJO: -- on one and four?

MR. STACK: Again, we need two trains to remain free of damage, and in these cases, you know, if we had an airplane crash that affected Safeguard 4, we would still have two and three protected.

MEMBER SHACK: You can see it in blue on Slide 6.

VICE CHAIRMAN ARMIJO: Yeah, I understand what they're doing now. Thank you.

MR. STACK: Severe accident mitigation. Really for the severe accident mitigation features, I'll just high level overview. This is really covering the phenomena from severe accident covered in SECY 90-016 and SECY 93-087. Just at a very, very high level, and we will be having a presentation on severe accident features coming in April, April 21st, to cover those features in more detail.

Just at a very high level, for the EPR what you have is there's a high pressure core melt, high pressure core melt depressurization system that had two trains where we're trying to get the target pressure below 200 pounds and prevent direct containment heating.

We have a passive ex-vessel melt stabilization conditioning and cooling system. When we look in this area here we will actually, hold up outside of the vessel, we will hold up the core melt for a period of time before it's directed into a cooling channel and down into a cooling pool, if you

wish.

Beyond that, we will have long-term core melt cooling where we have active cooking with the severe heat removal spray that we showed.

MEMBER CORRADINI: That's the blue line. The blue line showed --

MR. STACK: The blue line, yes. This is --

MEMBER CORRADINI: -- on the previous one. Yeah, that's fine. You don't have to again.

MR. STACK: That is this one right here.

MEMBER CORRADINI: Okay.

MR. STACK: So basically that blue line will provide direct cooling of the corium in this area as well as spraying it out into the containment for depressurization and will also have passive autocatalytic recombiners to handle the hydrogen.

MEMBER CORRADINI: In your first bullet, is that depressurization system different than what maybe I mis-remember what I might call the crash cooling system that you have in the plant, or are they one and the same?

MR. STACK: When you sit back and you look at these -- do you want to answer, John?

MEMBER STETKAR: He was asking about MSR main steam relief trains versus --

MR. STACK: Oh, okay. This is on the primary. Yeah, this is all in the primary. This is sitting on the pressurizer.

MEMBER CORRADINI: Ah, so this is on the pressurizer versus simply just cooling down the secondary to get the pressure down.

MR. STACK: Yes, this is all in the primary.

MEMBER CORRADINI: thank you. Thank you very much.

CHAIRMAN ABDEL-KHALIK: Now, I'd like to point out that you are at the end of your allotted time. However, given the level of questions that have been raised so far, I would like to give you some extra time. How much time do you think you'll need?

MR. STACK: As far as the overview is concerned, which was supposed to have been done 30 minutes ago, I'm done. We're ready to turn this over to Mr. McIntyre.

MR. McINTYRE: I'm just going to go very, very quickly through the chapters.

CHAIRMAN ABDEL-KHALIK: All right. Please go ahead.

MR. McINTYRE: Okay. With that, thank you, Tim.

Tim has just talked about it at a pretty high level, the design features. It's an evolutionary plant. It's an active plant. It's really, you know, fundamentally not significantly different.

If you look at the number of exemptions and exceptions that we have in the applicant, we had 1.2 exemptions. One is for M5 fuel, which is an AREVA specific fuel cladding, and it's not in the rules. So we have to ask for an exemption even in operating plants whenever we use it, and we have had an exemption for the dedicated containment vent for severe accidents. That came through in an RAI and as a result of the RAI, we're taking credit for a 36 inch vent that's there. So we've taken that exemption away.

Now, this is not a passive plant. So there's no RTNSS. There's no focused PRA. There's none of that stuff that you've been talking about on some of the previous applications or in my previous

life.

MEMBER STETKAR: There is a DRAP list though.

MR. McINTYRE: Yes. We'll get to that.

And because it is not significantly different, there's no unusual design features that forced us into special analysis methods or testing requirements. I think there has been a question over there. Do we have something on the accumulators that juggles the -- that juggles? -- that moderates the flow, and the answer is, no, we don't have fluid diodes.

What we did in preparation, we started in 2005 and 2006 of trying to get a leg up with the staff, of getting them a fundamental understanding of the plant. We put together a report that wasn't for review. It was just sort of a primer, if you will, on the unique design features of the plant. We had meetings with the technical staff. We submitted 15 topical reports for this that covered I&C, QA, the set point methods, the fuel, human factors, piping analysis methods. Some of those have since turned into technical reports rather than topical reports. If it's a topic report, the staff has got to write a

safety evaluation report, which is good if you're going to reference it on another application. This is just for the EPR. So really the SER may not be that valuable.

And we also set up a local office which we hadn't had here before so that we could have technical information here for the staff to go over and audit or conduct, you know, brief, quick meetings with the technical proprietary information.

The format of the FSAR, when you're reading it, it follows pretty much Reg. Guide 1.206. Sort of the challenge there is that's for a combined license applications and we're a design certification application, and what we've tried to do is to cover the information that you'd expect to see in the design certification, that the COL applicant would do what they call incorporate by reference.

So if you're looking at Reg. Guide 1.206, you'll see things that we don't have because we're not there yet. Like we don't have the material certs for the turbine. You wouldn't expect us to.

And for the standard review plan, we did provide the staff a technical report that was basically a summary of do we meet the standard review

plan or not, and we want to be up front about that. We don't want them to be sitting there figuring, well, do they meet it or not, but here's what we think. If we don't meet it, here's why it's okay to not meet it or, if we meet it, here's why we meet it and how we meet it, and that's really kind of a good road map for the staff when they're going through their review.

CHAIRMAN ABDEL-KHALIK: Now, I notice that all numbers given in the FSAR are given in both SI and British units, and the question is will COL applicants be required to declare a set of units to use?

MR. McINTYRE: I don't think they all are. That's another application.

CHAIRMAN ABDEL-KHALIK: They aren't?

MR. McINTYRE: No, ours --

CHAIRMAN ABDEL-KHALIK: The ones I saw are mixed.

MEMBER POWERS: Can you tell me why is that even vaguely important?

CHAIRMAN ABDEL-KHALIK: That is very important.

MEMBER POWERS: It cannot possibly be

important.

CHAIRMAN ABDEL-KHALIK: Because --

MEMBER POWERS: I'm sure there's some arcane reason.

CHAIRMAN ABDEL-KHALIK: No, it's not arcane. It's practical reasons. If people are using mixed units, there is room for misinterpretation and with misinterpretation of the units of specific quantities in tech specs --

MEMBER POWERS: I'm going to take over the timing on this meeting and say let's settle that elsewhere.

CHAIRMAN ABDEL-KHALIK: Well, I think this is a very important issue, and I think the staff ought to be aware of it.

MEMBER POWERS: Staff, please take note. Let's move on.

MR. McINTYRE: Chapter 2. The topics listed are, in each of the following sites, are what the SRP requires. You've got to cover these things, these areas.

The design parameters that you'll find in the FSAR, they're pretty close to what were in the utility requirements document that EPRI put together

years ago, and we've gone through and we tweaked them where we needed to to make sure that they covered the plants that had the sites that were going to have an EPR built if there was any changes that needed to be made to it.

And essentially Chapter 2 is a large, combined license information item that here are the parameters. You need to make sure that your site fits within that list of parameters.

Chapter 4. The topics are from the SRP, as Tim has talked about the design features. He talked about and mentioned earlier having submitted a number of topical reports. One, oh, two, six, three PA is code for the code applicability report that we turned into the staff, and we did get an SER on that.

And our purpose of turning that in was if we're going to do a lot of safety analyses, and from my standpoint spend tens of millions of dollars, we want to make sure that the staff is in fairly fundamental agreement on the codes and methods that we're using, and so that was one of the proactive things that we did.

The differences in Chapter 4 and the 14 foot fuel, that's really not unique for the EPR.

Other plants have 14 foot fuel. N4 has 14 foot fuel. The thing that we had to do was to go around the critical heat flux testing and develop our own CHF model because that wasn't --

MEMBER CORRADINI: That's the main point you're -- that's the main reason you're identifying this here, right?

MR. McINTYRE: Yes.

MEMBER CORRADINI: Okay. I'm just trying to remember if anything in the country, in the U.S., is 14 foot.

MR. McINTYRE: South Texas.

MEMBER CORRADINI: South Texas is?

MR. McINTYRE: Yes.

MEMBER CORRADINI: Okay. I thought none were. Sorry. Thanks. Fine.

MR. McINTYRE: That's it. We have a lot more experience with, "we," big AREVA, with 14 foot cores because we've got the N4 units.

MEMBER CORRADINI: Right, right. Okay. So it's mainly CHF.

MR. McINTYRE: Un-huh.

MEMBER CORRADINI: Okay. Thank you.

MR. McINTYRE: We have a heavy reflector

which is really new to plants, but if you're a new plant designed, people that are coming through that's not so new anymore reduces vessel fluence and affects the fuel cycle.

We have Aeroball Measurement System, and again, that's while it's new here. The Siemens units have been using it since 1974. So there's a fair bit of experience with that, but that will be the first of a kind in this country.

And something that's a little different is that the DNB and the linear heat generation rates are through a continuous power mapping. So it's through a calculation, and if you look at the tech specs, you'll see some things that are a little different in the tech specs because we don't have specific DNBR numbers. It goes into a computer and it does a calculation of DNBR. It's sort of an on-line process. So that is something that is going to be different that we'll talk about when we get to those chapters.

Chapter 5, as Tim showed you, it's a standard four-loop PWR, U-tube steam generators, four reactor coolant pumps, and again, it's a difference -- there's no penetrations in the bottom of the head.

It's a maintenance issue. It's a radiation exposure issue. So we have a different approach for that.

Tim talked about the pressurizer safety relief valves, and Alloy 690 -- no, 600 in the plant. It's just pretty much, again, a standard plant.

Chapter 8, electrical. The good news about Chapter 8 is there were no open items in the safety evaluation report. So that was really good news for us.

If there are no open items, Getachew, is that through Phase 4?

MR. TESFAYE: That's true.

MR. McINTYRE: Yes. So that's really a super thing.

Tim talked about the four emergency diesels, talked about the alternate feeds, island mode operation. This unit has 100 percent load rejection and can be kept running if the grid goes down so it can be used to start the grid back up and have a power source. That's going to be really different.

Chapter 10, steam and power conversion. Again, Tim has talked about the first two sets of bullets. He talked about a difference is we do not

have a mechanical over-speed trip. It's redundant in diverse electrical trips for the turbine. He talked about the main steam generator or main steam relief train.

I don't know if he mentioned this, but we do not start up with aux feed. We have a separate start-up feed system, non-safety related, and he did mention that we have the feedwater pumps. There's no turbine driven pumps. They are all about motor driven pumps, and that really improves the reliability of the plant.

Chapter 12, it's really kind of neat, I think, to see this because in Chapter 12, and if you start thinking about radiation doses and exposures when you're building the plant, you can really make some huge differences in the design of the plant and keep the dose down.

So things are significantly more compartmentalized. This plant has a lot of rooms. If you start looking at the diagrams, you can see that this plant really has a lot of rooms because things are built to keep high radiation areas away from other areas and they are trying to keep them also as small as possible.

And they also have dedicated ventilation systems to try to reduce the chance of cross-contamination between clean areas and dirty areas. We've tried to reduce cobalt. Permanent shielding is in place. If you go in, it's not stuff that when you're doing maintenance on the plants you've got to go in and move stuff in to do maintenance.

And basically what we did was that it was applying ALARA as you went through the design process of how could you do this and make the plant easier to maintain and, quite honestly, keep the dose down.

The 50 person rem is a three-year average and includes an outage.

Chapter 17, one of the topical reports we had was the QA plan. It was important to get that in again because we're going to work to this plan because we're going to be doing all of this work. We got this back in 19 -- excuse me -- in 2006 before we turned the application in.

Reliability Assurance Program that John mentioned, we had much discussion of that during the subcommittee, and the questions were the DRAP, design reliability assurance program, and as the design certification guys, it's our view that the DRAP and

it's really kind of a short-sighted view, I guess I'd go so far as to say; the DRAP ends with design certification, and even though the design process goes on for years, after the COLA is issued the D part of the DRAP is ongoing.

And at design certification time we are able to tell you what the important structures and systems are, but we can't talk about components because we haven't got it down to that level yet, and we don't have the PRA. We haven't done the expert panel. We haven't done all of the things that you need to do in the DRAP.

Lynn Mrowca has put together a -- and I don't have it -- she's put together a better slide that explains it, showing that the DRAP goes out over a period of time because John's concern was how do you do the hand-off to the people that are going to be doing the component evaluations, and I think we've got a better story on that.

We understand now why we were struggling answering your question because we're not going to get to that in design certification time, but it does get done.

MEMBER STETKAR: It will essentially be

handed over to the COLA.

MR. McINTYRE: Right, and we've had a better idea of how that handoff works and they have a better idea of what's going to be coming their way and the staff has a better idea of exactly how this process should work because this is something that hasn't been -- the DRAP is a new thing. Actually I was kind of surprised that we were struggling in this, being the fifth or sixth design certification, that we were having some pretty fundamental questions of how this thing worked.

MEMBER STETKAR: You're doing it in real time. The other folks didn't have to do it in real time. That's the problem.

MR. McINTYRE: That's true. That's right. It was easier the first time I did it. I was "no, never mind," and we do have --

MEMBER STETKAR: It was later.

MR. McINTYRE: yes. We do have the DRAP list in the application, and the maintenance rule is basically a combined license applicant activity because you don't have the maintenance rule during design certification until after the plant is operating.

And that concludes our prepared presentation.

MEMBER POWERS: Any questions that you -- any more questions that you have? They won't ask him questions, Tim. Only you.

MR. STACK: I noticed that, Dana. I made great efforts to not learn the details of this plan.

(Laughter.)

MR. STACK: I know what happened last time.

MEMBER POWERS: All right. At this point we would turn it over to staff. We'll run through a fairly summary description of where they stand on the chapters we've looked at. There are, with the exception of one chapter, there are open items in each one of the chapters, but the staff will assure us that none of the open items appear to us at this stage to represent major hurdles. In many cases they are formal opens.

Getachew.

And thank you very much. I really enjoyed your presentation.

MR. McINTYRE: It's good to be back. I appreciate all of the questions on the tube rupture.

MEMBER POWERS: Now you know that that will get some discussion.

MR. McINTYRE: I'll put that on --

MEMBER POWERS: We'll get to it.

MR. TESFAYE: Good morning again. I'm Getachew Tesfaye. I'm the Project Manager for EPR design certification review, and Jason Carneal here is my right hand. He has three difficult chapters. So he's going to help me with the slides.

None of my presentation involves technical issues. I'm just going to give you an overall overview of the project process, some of the strategies we employed in our review, and some of them will be repetitive because Brian has mentioned some of our strategies. But I will go ahead and mention them from our perspective.

Next slide, please.

This slide shows a major milestone chronology for this project. As Brian mentioned, this project started back in 2004, December of 2004, with pre-application activities. There was two phase pre-application activity, and the first phase lasted about a year. The AREVA personnel introduced their plant, the unit design features through various

presentations.

And then the second phase they submitted, as Brian mentioned, about 15 topical reports and four technical reports for the staff's review. So that was a very productive pre-application activity.

Of course, the major milestone here, the design certification was submitted in December, December 11th, 2007. That's a little bit over 2 years old now, the design certification review.

Now, we completed Phase 1 review exactly a year later on time, and AREVA submitted Revision 1 of the FSAR in May 2009. This was essentially to incorporate some of their commitments that they made when they responded to some RAI questions.

And beginning last summer through March, we completed Phase 2 review of ten chapters, Chapters 2, 4, 5, 8, 10, 11, 12, 16, 17 and 19.

MEMBER CORRADINI: Just for my memory, the difference between two and three is three has an SER with open items. Two is just back and forth with the applicant?

MR. TESFAYE: No. You mean the phase?

MEMBER CORRADINI: Yeah. I just can't remember. I'm sorry.

MR. TESFAYE: I'll go over that. There a next slide. Okay>

MEMBER CORRADINI: Sorry.

MR. TESFAYE: Phase 3 is actually the subcommittee presentation, is Phase 3. I'll show you in the next slides.

Next slide, please.

MEMBER CORRADINI: Thank you.

MR. TESFAYE: This is the current review process. It has got the various phases, six phases. We just issued this on February 16. The main reason for revising the schedule was because of what we call phase discipline. We would like to get the main technical issues resolved in Phase 2 before we move to Phase 3. As a result of that, the Phase 2 review was delayed by six months, from June through December of this year. That translated into, I believe, a four-month delay in the overall six-phase review.

Next slide, please.

Now, here I'd like to go over some of the strategies we employed in this review. As I mentioned, our application activities was very instrumental in getting the staff to know what the plant is like. We also employ a lot of interaction

with the applicants, frequent teleconferences, audits, and as Brian mentioned, AREVA has a local office where they make some technical documents that are not normally docketed in their offices. So the staff has very easy access to all their back-up calculations, and so that was very instrumental.

And of course, we hold several public meetings where the staff has to give feedback to the applicant.

And use of electronic RAI has been very instrumental. We issue RAIs using e-mails, and AREVA provides using e-mails. So that has made it easier for the staff to ask for the questions they want to.

(Laughter.)

MR. TESFAYE: Now, this is the last one. The last item here, phased discipline, is something that I'd like to raise here because this is very important. This is what Dr. Powers indicated why we leave RAIs as an open item.

First, discipline is the act of orderly completion of all activities within a phase prior to transitioning to the subsequent phase. Open items are to be limited to those issues that have a well defined scope and are likely to be resolved with one

applicant's response to the open items. That's not usually the case, but at least we try to get one response to reserve open items.

In phase 1, discipline requires all RAIs on the original submission be written and issued to the applicant and that preliminary safety analysis report developed for internal use. The completion of both activities allows the task to transition to Phase 2. In other words, the staff will have to ask all the questions for the first time in Phase 1, and in Phase 2 we started receiving the responses. If we like the responses, we close them and move on. If we don't like the responses and we find the issues significant, then we extend Phase 2. We don't get out of Phase 2.

And in Phase 2, the phase discipline requires two specific activities to be completed prior to transition of the task to the next phase. The first is the closing of RAIs with the applicant's responses and identification of the open items. In the event that some responses are incomplete and require supplemental RAIs or considerable new design information is submitted in response to the RAIs. The activity should be retained in Phase 2 and Phase

2 will be extended, and that's precisely what happened when we changed the schedule recently, because some of the RAIs that were not answered properly or took longer to respond to we could not get out of Phase 2 with those RAI questions being an open item.

So this is really the crux of our review, as discipline is very, very important.

MEMBER POWERS: And what I can say from a Subcommittee point of view, by the time they come to bring something to us, that when there are open items, they can fairly clearly articulate what the open item is and what they foresee is the path to resolution. So we're not getting hung up on a lot of things just misunderstanding what each other is talking about. It has really made things much easier.

MR. TESFAYE: Now, from this point on what I'll give you is the high level summary of the seven chapters that were completed prior to this week. I don't want to go through any details, but in Chapter 2, start generated 45 RAI questions and 13 of them are left open, and we're closing some of them as we speak.

Next slide, please.

Chapter 4 has one. Staff requested 104 questions, and 14 of them are left open. One of the items that's left open is the topic of the report as we discussed that involves the mechanical fuel design, and again, discusses a clear path forward. That's why we left that open.

Next slide, please.

Chapter 5, we generated 127 RAI questions and we have only 25 left.

CHAIRMAN ABDEL-KHALIK: I guess I'm wondering what is it that you're trying to convey to us by giving us the number of RAIs that you have asked and the number of RAIs that remain open. What sort of detailed technical information are you conveying to us by giving that kind of table?

MR. TESFAYE: Zero.

CHAIRMAN ABDEL-KHALIK: So why?

MR. TESFAYE: This is just an overview from the project's perspective. It will give you an idea of the extent of the review that has taken place by the number of questions that we've asked and by the number of items that are left open. So this is just to give you an idea of the high level summary of

this task finding. It doesn't have, like I said -- this is from the project's perspective, and we don't have any technical people to support us to discuss the open items if that's what you're looking for.

But those open items are discussed in detail and discussed at the Subcommittee level.

CHAIRMAN ABDEL-KHALIK: So if that is the case do you expect the Committee's review and/or the Committee's letter to be void of technical commentary?

MR. TESFAYE: No, no, no, no. Like I said, this presentation gives you the summary of the open items, the number of open items, the number of questions. It doesn't give you the nature of the technical nature of the open items. That was discussed in the Subcommittee, and the Subcommittee report, of course, will have those technical discussions.

MEMBER POWERS: I think that's a fair statement. The chapters where the Subcommittee has had significant comment, we have not brought those forward to you here. They're still going through regurgitation. Here I think the substance of the thrust is the Subcommittee generally agrees that

those things they've listed as open items are open and there is a clear to resolution on them.

I don't know that we've taken a vote on every single one of them, but we certainly haven't flagged them as anything that is in your list is where we disagree with your assessment on the situation. I think that's a fair statement.

VICE CHAIRMAN ARMIJO: Well, clearly, in all of these open items there must be a few that are significant, not just procedural or administrative. The answer is no? There's no big deal? There's no problem?

MR. TESFAYE: Most of them are clarifications.

MEMBER POWERS: Yes.

MR. TESFAYE: Most of them are clarifications. Nothing significant in the chapters that were presented so far, and again, it's very important to emphasize if the staff doesn't see any clear path forward, we don't leave them open. We extend the review process, the review schedule.

MEMBER POWERS: There's one on the previous section where you have to do an SER on a topical report, and the only reason that it is open

is that the SER isn't done yet.

MR. TESFAYE: That's right.

MEMBER POWERS: And as soon as it's done, then they come off.

VICE CHAIRMAN ARMIJO: That's an SER on the fuel mechanical design topical report?

MR. TESFAYE: Mechanical design, yes.

VICE CHAIRMAN ARMIJO: Will we see that? Will the Subcommittee see it?

MEMBER POWERS: To the extent that we wanted to go through it, which means to the extent that you want to go through it as a matter of fact.

VICE CHAIRMAN ARMIJO: Could I get a hold of it just to take a look at that topical report? I don't have it.

MEMBER POWERS: Oh, okay.

VICE CHAIRMAN ARMIJO: If I could get it, I'd like to take a look at it.

MEMBER POWERS: Sure.

VICE CHAIRMAN ARMIJO: Because this is, you know, a pretty evolutionary approach, and I expect the fuel design is going to be pretty evolutionary, too, or not much change, but I'd like to see it.

MEMBER POWERS: Some differences, yeah.

MEMBER STETKAR: I think it's also important to note the chapters. You know, this doesn't cover Chapter 6, the safety systems. It doesn't cover Chapter 7, the digital I&C. It doesn't over Chapter 15, the safety analysis. So, you know, a lot of the potentially really difficult technical issues haven't come before us yet anyway.

MR. TESFAYE: That's correct. That's why we completed these chapters early, on time.

MEMBER BANERJEE: Which chapter are the sump screen issues in?

MR. TESFAYE: Chapter 6 and a little bit of 15.

MR. CARNEAL: Six and a little bit of 15.

VICE CHAIRMAN ARMIJO: So we haven't gotten that yet.

MR. CORNEAL: Downstream effects are in Chapter 15.

MEMBER BANERJEE: This is a low fiber plant?

MR. CORNEAL: Yes. That's what the applicant is claiming.

(Laughter.)

MR. CORNEAL: There's some trouble with the definition of what is a low fiber plant.

MEMBER BANERJEE: Well, there's enough latent debris to cause trouble, anyway.

MR. CORNEAL: Yes, and that's one of our very active review areas at this point based on performance.

CHAIRMAN ABDEL-KHALIK: I guess this is an internal discussion that the Committee will have to have to decide the level of technical rigor and content that is presented to the full Committee vis-a-vis the Subcommittee. So given that you've had directions from the Subcommittee as to how to make this presentation, I urge you to proceed.

MR. TESFAYE: Thank you.

Next chapter, Chapter 8 is one of the cleanest chapters. This is essentially done. We are in Phase 5 for this you can say because there are no open items to close in Phase 4. There was no open item. The staff asked 49 RAI questions and all of them were closed.

Chapter 10, 75 RAI questions and 12 of them are still open, and again, most of these open items are clarification, nothing technically

significant.

MEMBER BROWN: I just have one question on Chapter 8.

MR. TESFAYE: Yes, sir.

MEMBER BROWN: When I looked at it, and this is only from a difference from what was observed in two of the other designs. There's something called a NAT, normal auxiliary transformer, set-up and then a UAT or EAT. I don't know, some other transformer set-up.

In other words, power for the plant support services do not come from the main generator. They come off the main grid out of the switchyard, which is obviously the generator supplied in there. That seemed to be a major difference between at least the other couple of designs.

I don't know that that's consistent with any other commercial plants today. It is, John? I mean, I had not seen any in the design cert, and plants I'm familiar with we obviously supplied our own power in the Navy ships.

(Laughter.)

MEMBER BROWN: No long cables coming out to us. So we had no choice. Does that --

MEMBER SIEBER: They have investment protection diesel.

MEMBER BROWN: Yeah, well, I guess that's -- I mean, if you have a station blackout or where everything goes out, you've still got the UPSIS (phonetic) before you --

MEMBER SIEBER: What do you need, turbine oil?

MEMBER BROWN: I had no idea what was in the other conventional plants today. So I thought I'd ask the question just to learn something new in the process. I think my compatriots and colleagues have answered my question.

MR. TESFAYE: Thank you.

We'll move to Chapter 12 please.

Chapter 12, 26 RAI questions and then of them are still open.

Chapter 17, 26 RAI questions. Only two of them, actually one of them is just to track an inspection that the staff is planning to do under QA activities. Again, Chapter 17 heavily relies on the topical report that was previously approved. So not a whole lot of questions were asked. And Brian has discussed the main topic of discussion during the

Subcommittee presentation.

And the last slide kind of gives you an overview of where we're at in terms of Subcommittee presentation. The left column has Groups 1 and 2 which we completed, with the exception of 19 that we completed this week. We presented 11 and 16 on Tuesday.

And Group 3 and Group 4 are where we expect the very detailed and very contentious discussions in the Subcommittee. No? Okay.

MEMBER POWERS: Piece of cake.

MR. TESFAYE: Piece of cake.

MEMBER CORRADINI: So just to get back to the Group 1, just to understand the way you're thinking about this, this is, at least as I look at it from my perspective, from another certification, I'm pleased to see the organization. So there's nothing in -- I think Dana characterized it as there's formal open items, but you guys have a path to the end game.

MR. TESFAYE: Yes.

MEMBER CORRADINI: So nothing looks as anything of great concern at this point with the chapters you've briefly gone over today.

MR. TESFAYE: None, none whatsoever. Like I said, that's why I read how we defined phase discipline. It's very important.

MEMBER CORRADINI: That's why I wanted to make sure I understood.

MR. TESFAYE: Yes.

MEMBER CORRADINI: But that's fine. Thank you.

MR. TESFAYE: That's all I have, Mr. Chairman.

MEMBER POWERS: I think it's fair to say that in the reviews of the chapters, that those chapters have been presented here today. Any questions the Subcommittee had were primarily ones that we felt were the Subcommittee just needed additional clarification; that when the Committee has had significant questions that required more than just clarification, we've held those back so far. I mean, that's primarily 19 right now, which I think is going to be completed, and that will be another round. I'm not sure that I'm that optimistic on 19.

But my characterization of the Committee and, I think, Subcommittee itself is that, yeah, there's a little more information we need, but we

don't see anything that is a major stumbling block here.

Is that your assessment of it as well?

MR. TESFAYE: That's a very true assessment.

MEMBER POWERS: Yeah. And as I said, they've been very careful about bringing things to us where they're really not asking the Subcommittee to intrude in the resolution process. They have a strategy that they're pursuing, and to the extent that we have gone into those strategies, it does not look like there's any formidable barriers.

So in truth, it has been altogether a fairly pleasant exercise in going through these chapters up till now. A fair characterization?

MR. TESFAYE: That's right, and we'll keep it that way.

MEMBER POWERS: Or wait till we get to seven.

If there are no other questions for the speakers, that's where we stand with respect to the EPR certification, and I guess we're kind of on schedule. We'll turn it back to you.

CHAIRMAN ABDEL-KHALIK: Thank you.

At this time we'll take a break for lunch. WE will reconvene at 1:00 p.m.

(Whereupon, at 12:01 p.m., the meeting was recessed for lunch, to reconvene at 1:00 p.m., the same day.)

A-F-T-E-R-N-O-O-N S-E-S-S-I-O-N

(12:58 p.m.)

CHAIRMAN ABDEL-KHALIK: We are back in session.

At this time, we will discuss Item 4 on the agenda, Supplement 3 to General Electric Topical Report NEDC-33173PA, "Applicability of GE Methods to Expanded Operating Domains." And Dr. Banerjee will lead us through this discussion.

MEMBER BANERJEE: Thank you, Mr. Chairman.

I am Sanjoy Banerjee, the Chairman of the Power Uprates Subcommittee, which considered this matter. And we have with us, in addition of course to the ACRS full Committee members, our consultants, Professor Graham Wallis, who was former chairman of the ACRS, and Professor Tom Towner, and Zeyna Abdullahi, who acted as our DFO, Designated Federal Officer, with regard to the Subcommittee meeting, the Power Uprates Subcommittee meeting.

Now, let me give you a little background. Some of you perhaps were not here, but many of you were. In around the middle of 2007, we held a number of meetings related to operation in what is called the expanded operating domain related to MELLLA+, and considered two GEH topical reports.

The first was NEDC-33173P, which had to do with the applicability of GE methods to expanded operating domains. It was a methods topical report. And NEDC-33006PA, Revision 3, which had to do with the General Electric -- really with the application and procedures followed in applying the methods to the MELLLA+ extended operating domain.

We wrote a letter report on June 22, 2007, where we recommended acceptance of both of these topical reports, subject to the limitations that were imposed on them by the staff, with which we agreed.

Now, one of the limitations was that if we move to different fuel designs that we would take another look at the applicability of these methods. I'm not going to say very much about the fuel designs right now, because we are in open session. But what we have now is a different fuel design, in fact different part-length rods and different other characteristics, which I won't go into right now.

In any case, this meant that we need to take another look to see if the methods that were developed and which we accepted back in 2007 were still applicable to these -- to this new fuel design. So that's what we are going to talk about.

We had a Subcommittee meeting on March 3rd, and we looked at the Supplement 3, which had to do with this GNF2 fuel design, and we are going to consider now whether we are going to accept it or not. That's going to be the crux of it, any other recommendations that you want to make.

Out of the Subcommittee meeting came several comments, which we conveyed to the staff and the staff responded, and together with GE, GEH. And we got very complete responses to many of the things we asked. So that's the situation right now.

It is -- I am going to now hand this over to I think Steve Philpott to take it on. And when we close the meeting, please, GEH, ensure that only the people who should be here should be here. This is not closed yet. We are still open. We will close it after you.

MR. PHILPOTT: Okay. Thank you. My name is Steve Philpott. I'm a Project Manager in NRR in the Licensing Processes Branch in the Division of Policy and Rulemaking, and I have been working with the technical staff here at NRC for the -- to coordinate the review of this evaluation.

As. Dr. Banerjee has already summarized for you, we are addressing in particular Supplement 3 for the methods topical report.

Just a quick summary of what we are going to do. You should have four presentations in front of you, or copies of four presentations. We are going to start with staff from GE Hitachi, some open

session opening remarks, followed by a closed session, more technical review of the qualification of GNF2 from GEH staff. We will come back, and then there's two presentations from NRC staff. Dr. Peter Yarsky is going to address the scope of the review in an open session, and then we will go back again to closed session for a more detailed review.

As Dr. Banerjee mentioned, there are several limitations and conditions in the methods topics report, and Supplement 3 addresses specifically this one that the applicability was limited to, earlier fuel designs up to GE14. This supplement would extend it to GNF2, of course, with no other changes to limitations and conditions in the topical report.

So the -- well, there is a series of supplements that GE has agreed to submit to address several of these limitations. This is -- we are focusing on Supplement 3, and this review addresses that one particular one. We do have a total of four supplements in-house now that address some of the other limitations or penalties for the topical report.

But I am not going to stay up here much

longer. I am going to hand it over to Jim Harrison. We will start off with the folks from GE, and let them start with the presentation.

MEMBER BANERJEE: Thanks.

MR. HARRISON: I am Jim Harrison with GE Hitachi. I handle the fuels licensing with GE and GNF.

I am going to kind of go over a little background material and a little bit of some of the same things Steve mentioned with respect to the supplements and the approach for updating and addressing some of the limitations that were in the SE for 33173.

Basically, there were 24 limitations and conditions in the safety evaluation. Many of those had to do with reporting and documenting and analysis, and they didn't have a direct impact on plants' operability or applicability.

There are four supplements that are in process now. The one that we are talking about today, Supplement 3 --

CHAIRMAN ABDEL-KHALIK: I think we are going to need to wire you up.

MR. HARRISON: Or I can sit down.

CHAIRMAN ABDEL-KHALIK: That's good, too.

MR. HARRISON: I can stand or sit.

CHAIRMAN ABDEL-KHALIK: As long as the mics pick you up. That's the important thing.

MR. HARRISON: The four limitations that we are addressing now have to do with the applicability to GNF2, because the initial SE was limited to GE14 fuel products.

MEMBER BANERJEE: Hold on. Let's get the mics organized. Can you hear him?

CHAIRMAN ABDEL-KHALIK: All right. Go ahead.

MR. HARRISON: There was an additional margin on the safety limit, and an additional margin that was placed on the operating limit. Those are the subject of two supplements. There was a penalty that was applied to the GESTR-M thermomechanical models, and then there was a requirement, which is now in the process of being implemented, that when PRIME was approved that it would be implemented in place of GESTR-M for plants referencing NEDC-33173.

Now, in terms of acronyms, GESTR-M is the older thermomechanical analysis program at GNF, and PRIME is the new one recently approved.

Supplement 3 is seeking to remove the limitation on the GE14 fuel, extending that to GNF2, the most recent GNF fuel product. It doesn't seek to change any of the other limitations. It doesn't seek to remove any of the penalties. Essentially, it only looks to extend the applicability of the document.

Supplement 3 utilizes the same structure as the initial 33173 LTR, so that each of the subjects that were addressed initially are addressed again for Supplement 3.

I mentioned that there were four supplements that were in play right now, and numbered 1, 2, 3, and 4. And as fate would have it, they got submitted in 4, 3, 2, 1. So they were planned 1, 2, 3, 4, but it didn't happen that way.

So taking it left to right, starting with 1, which was just recently submitted this week, the operating limit penalty was established based on the staff's view that there wasn't sufficient void fraction information to support the use of the Findlay-Dix model and expanded operating domains.

The report supporting that was just recently submitted. So the safety limit penalty was associated with the staff's view that there weren't

sufficient gamma scans for 10x10 fuel. We have gathered those gamma scans, analyzed them, and submitted that in August of last year.

The staff has provided RAIs, and the review time is estimated to be 18 months on that one.

Supplement 3 is our subject at hand today having to do with the GNF2 applicability. That report was submitted July 31st of last year. It is obviously complete, as you are hearing today.

PRIME kind of comes in from the side on this, PRIME having its own review, and being completed January 22nd of 2010.

Supplement 4 has to do with the implementation plan of PRIME through all of the downstream codes. So, you know, PRIME being the design and analysis code for the fuel, the parameters from that code get used in transient analysis and LOCA codes and stability codes, which we call the downstream codes.

So from each of these supplements the anticipation is that we will have a supplemental SE, which will address the limitation associated with that item.

VICE CHAIRMAN ARMIJO: I just want to

make sure I understand. When PRIME gets approved, and these other things, assuming they get approved -- the OLMCPR, SLMCPR -- will all of those be transferable to GNF2? Or do we go through another cycle of getting those approvals accepted for GNF2 fuel?

MR. HARRISON: No, they're structured to cover GNF2.

VICE CHAIRMAN ARMIJO: So they are covered.

MR. HARRISON: Right.

VICE CHAIRMAN ARMIJO: Okay.

MEMBER SHACK: PRIME will just remove the burnup limit, is that --

MR. HARRISON: Well, yes.

VICE CHAIRMAN ARMIJO: That's one thing it will do.

MR. HARRISON: It does, and then -- but what we're talking about here is implementation into the downstream codes -- you know, the transient analysis codes, the stability codes, and the CODES. But PRIME is the vehicle for removing the burnup limit. That's true.

Okay. I'm going to turn it over to Brian

to --

CHAIRMAN ABDEL-KHALIK: I mean, just to follow up on Sam's question --

MR. HARRISON: Sure.

CHAIRMAN ABDEL-KHALIK: -- we are looking at Supplement 3, and Supplement 3 states that we are only looking at extending the type of fuel that these methods are going to be applied to.

MR. HARRISON: Right.

CHAIRMAN ABDEL-KHALIK: Without any change in the current constraints --

MR. HARRISON: Correct.

CHAIRMAN ABDEL-KHALIK: -- which are addressed in Supplements 1 and 2.

MR. HARRISON: Right.

CHAIRMAN ABDEL-KHALIK: I guess perhaps my question will come up when we address Supplements 1 and 2.

MR. HARRISON: So the task, then, if I'm anticipating your question, is that when -- when the staff is reviewing 1 and 2, and when you are looking at 1 and 2, you will have to consider that it addresses GNF2.

CHAIRMAN ABDEL-KHALIK: Okay.

VICE CHAIRMAN ARMIJO: And the staff will address that in their --

MR. HARRISON: Yes.

VICE CHAIRMAN ARMIJO: -- review.

MR. HARRISON: Yes.

VICE CHAIRMAN ARMIJO: Okay.

CHAIRMAN ABDEL-KHALIK: Thank you.

MR. HARRISON: Okay.

MEMBER BANERJEE: So do you want to close the session now?

MR. HARRISON: Yes. That was the plan -- to close the session now.

MEMBER BANERJEE: Okay. So please check. So we will go into closed session now.

(Whereupon, the proceedings went into Closed Session until 1:59 p.m.)

MEMBER BANERJEE: We are now in open session for the next 20 minutes.

DR. YARSKY: What I was going to offer before beginning my formal presentation is to briefly show a picture of the MELLLA+ operating domain. This picture is taken from the topical report NEDC-33006P-A. You may bring that up.

I generated this a second ago, so I hope

it's not too --

(Laughter.)

There is a blue line, but you can't see it on this figure. The MELLLA+ operating domain is represented by this blue upper boundary -- can you follow the mouse on the screen? -- from point B to D to E.

The purpose for expanding this operating domain here is to allow this flow control window between D and B, and to pictorially show what that allows is for two ways of controlling reactivity during exposure, one of which is control blade motion, and the other which is to actually control reactivity through flow rate.

So this is showing how, through exposure, reactivity changes can be compensated by rod movement and also changes in the flow. That's what the MELLLA+ operating domain would allow at EPU power levels.

Part of the reason for the staff's review of the methods is that at point D you are operating at EPU power levels generally 20 percent higher than originally licensed thermal power, but at a reduced flow rate, in the neighborhood of 80 percent of rated

core flow. So you have higher power level and a lower flow rate leads to potentially higher void fraction.

CONSULTANT DOWNER: Peter, can I ask a question real quick? For point E, the only way to get back to then the dark -- the black line, then, is by rods?

DR. YARSKY: Okay. You are referring to point E?

CONSULTANT DOWNER: E, right. To vertically go down.

DR. YARSKY: To vertically go down from this point, there are -- well, there is -- you could allow the power to decrease due to burnup effects and reactivity decrease due to burnup, or you could insert a control rod valve.

CONSULTANT DOWNER: All right. Okay.

MEMBER CORRADINI: But I view -- maybe since we're just educating ourselves -- I view the blue and the black as boundaries that one should not cross unless something bites you. But what bites you down at the knee down here and up there could be different. Down here I seem to remember when you guys first gave the presentation to Sanjoy about

MELLLA for the current fuel its potential instabilities up by D is more approaching CPR limits potentially.

MEMBER BANERJEE: Well, D is --

DR. YARSKY: Critical heat flux limits.

MEMBER BANERJEE: Yes. Yes, sure.

MEMBER CORRADINI: So the mechanism in which you don't -- the reason you don't want to cross differs as you move through that boundary.

DR. YARSKY: Yes.

MEMBER CORRADINI: Okay.

MEMBER BANERJEE: No doubt. All right. Thank you, Peter. Let's move on.

DR. YARSKY: No problem. Give me one second to locate the slides. No? No, that's -- concluding remarks is not it. That's my proprietary presentation.

Okay. Give me a second while I bring up my slides from my thumb drive. I apologize. Give me a moment.

MEMBER BANERJEE: So while he is doing that, who is going into MELLLA+ with the EPU first?

DR. YARSKY: Monticello submitted their MELLLA+ license amendment request in January of this

year.

Okay. Now, to begin the open portion of my presentation, I want to discuss the scope of the NRC staff review of Supplement 3. Of course, as we talked about in this morning's session, there is a specific limitation in the staff's SE for the IMLTR, specifically Limitation 22, which says that the interim methods review is applicable to all GE lattices up to GE14.

Supplement 3 was provided for staff review to extend the applicability of the IMLTR to GNF2. In our review of the Supplement, Limitation 22 of course says GE14 and earlier. Supplement 3 is intended to extend that to GNF2. And as part of this supplement, there is no request for removal or modification of any of the IMLTR limitations beyond extension to a fuel design that is beyond GE14.

We talked briefly this morning also about some of the specific GNF2 features and how it is different from GE14. I have listed some of these features here, which is that GNF2 is a high power density fuel design with two part-length rod configurations, a new spacer design, an increased uranium content fuel pin design, different cladding

thickness, and a new Defender debris filter.

In our review, our review was guided by the review that was previously done for the IMLTR. So GEH spoke this morning as to how they developed the content of the supplement by addressing all of the same topics in their original IMLTR submittal. The staff review covered all of the same topics laid out in the staff's SE for the original IMLTR, and in this way we make sure that the scope of the staff's review for Supplement 3 is fully consistent with the staff review of the initial IMLTR.

These are the primary topics that the review covered, which is the extrapolation of the methods to high void fractions, the 40 percent depletion assumption, bypass and water rod voiding, stability, and also the applicability of the thermal hydraulic model.

I believe that's all I have in way of talking about the scope of the staff's review.

MEMBER BANERJEE: I think what we'll do now, Peter, is rather than go into closed session we'll take a break, and then we'll go into closed session. So let's take a 10-minute break. Okay. So we'll come back let's say shortly after 2:15, and

then we'll start.

MEMBER CORRADINI: 2:20?

MEMBER BANERJEE: 2:20. Let's make it 2:20.

MEMBER CORRADINI: Thank you.

MEMBER BANERJEE: I want to stay on time. I'm emulating Dana, trying to keep things on time.

(Whereupon, at 2:06 p.m., the proceedings in the foregoing matter went off the record for a break until 2:17, but resumed in Open Session at 3:12 p.m.)

CHAIRMAN ABDEL-KHALIK: We are back in session.

This is -- we are now in open session, and I hand it over -- back to you, Dr. Banerjee.

MEMBER BANERJEE: Okay. I am sorry that I dismissed this so cursorily, so I give it back to you, Peter.

DR. YARSKY: I just have a few slides and concluding remarks to make in the open session.

IMLTR Supplement 3 seeks, of course, to extend NRC approval to cover the GNF2 fuel design. We have looked at the several evolutionary design features that were incorporated into the GNF2 to

improve the fuel performance.

In the course of our review, we have addressed all of the topics that were addressed in the application of interim methods to GNF2, consistent with our initial approval of the IMLTR. We found that the bases were consistent, but there were no inherent features in the GNF2 fuel design that posed a challenge to the capability of the methods to analyze it.

The qualification basis of the methods for GNF2 is the same as was previously reviewed, and the performance of the methods is essentially the same.

And so the staff's SE would extend applicability of the IMLTR, including the current limitations and conditions to GNF2, and Limitation 22 specifically will be revised accordingly to document the staff approval up to designs including GNF2.

That's all I have.

MEMBER BANERJEE: Thank you very much. Are there any other questions?

(No response.)

Good. Excellent, Peter. Thank you, as well as the staff and GE, for very illuminating

presentations.

And I will hand it back to you now.

CHAIRMAN ABDEL-KHALIK: All right. So our discussion of Item 4 on the agenda has now concluded, and we will proceed to Item 5 on the agenda.

We are now off the record.

(Whereupon, at 3:32 p.m., the proceedings in the foregoing matter went off the record.)

AREVA NP Inc.

Presentation to ACRS U.S. EPR Design Certification Application

Brian A. McIntyre
Design Certification Project Manager

Timothy G. Stack
Technical Integration Manager

April 8, 2010

Outline

- Introduction
- Overview of the U.S. EPR Design
  - EPR Development Objectives
  - Major Design Features
  - Main Safety Systems
  - Protection From External Hazards
  - Severe Accident Mitigation
- Overview of U.S. EPR Design Certification Application

EPR Development Objectives

- Evolutionary design based on existing PWR construction experience, R&D, and operating experience
- Improved economics
  - Reduce generation cost by at least 10%
  - Simplify operations and maintenance
  - 60-year design life
- Improved safety
  - Reduce occupational exposure and LLW
  - Increase design margins
  - Increased redundancy & physical separation of safety trains
  - Reduce core damage frequency (CDF)
  - Accommodate severe accidents and external hazards with no long-term local population effect

Major Design Features - Overview

- **Nuclear Island**
  - Proven Four-Loop RCS Design
  - Four-Train Safety Systems
  - Double Containment
  - In-Containment Borated Water Storage
  - Severe Accident Mitigation
  - Separate Safety Buildings
  - Advanced 'Cockpit' Control Room
- **Electrical**
  - Shed Power to House Load
  - Four Emergency DGs
  - Two Smaller, Diverse SBO DGs
- **Site Characteristics**
  - Airplane Crash Protection (military and commercial)
  - Explosion Pressure Wave

Reflects full benefit of operating experience and 21st century requirements.

Major Design Features

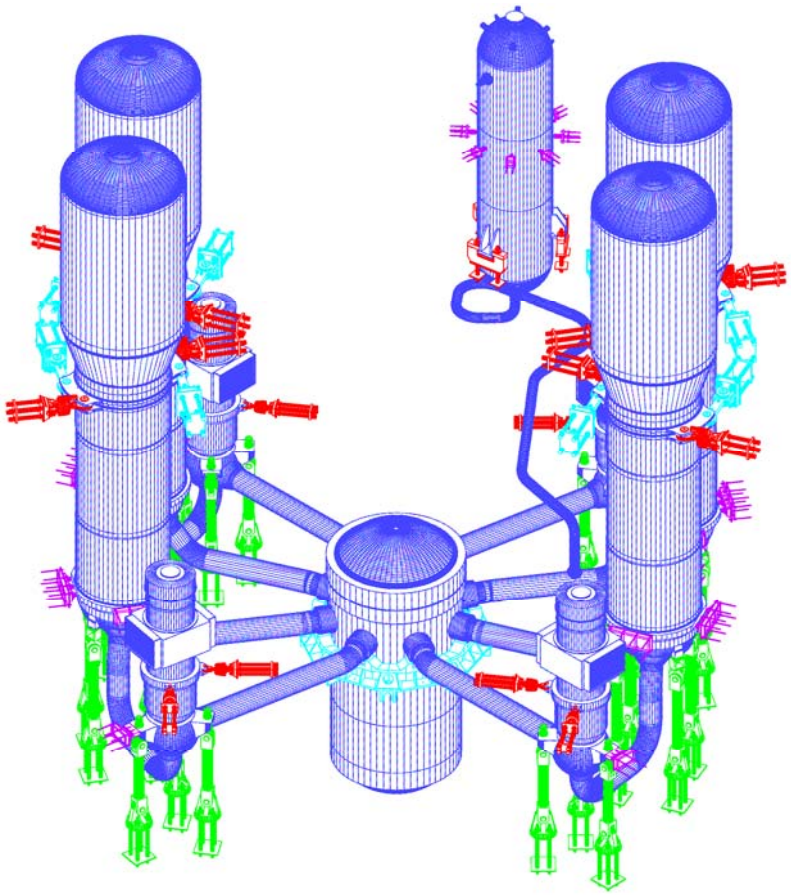

- Conventional 4-loop PWR design, proven by decades of design, licensing and operating experience.
- NSSS component volumes increased compared to existing PWRs, increasing operator grace period for many transients and accidents

A solid foundation of operating experience.

The Four Train (N+2) Concept

Each safety train is independent and located within a physically separate building.

Main Safety Systems

- Four train Safety Injection System (SIS)
  - Medium head SI pumps
  - Combined Residual Heat Removal System / Low Head Safety Injection
- In-Containment Refueling Water Storage Tank
- Extra Borating System (two trains not shown)

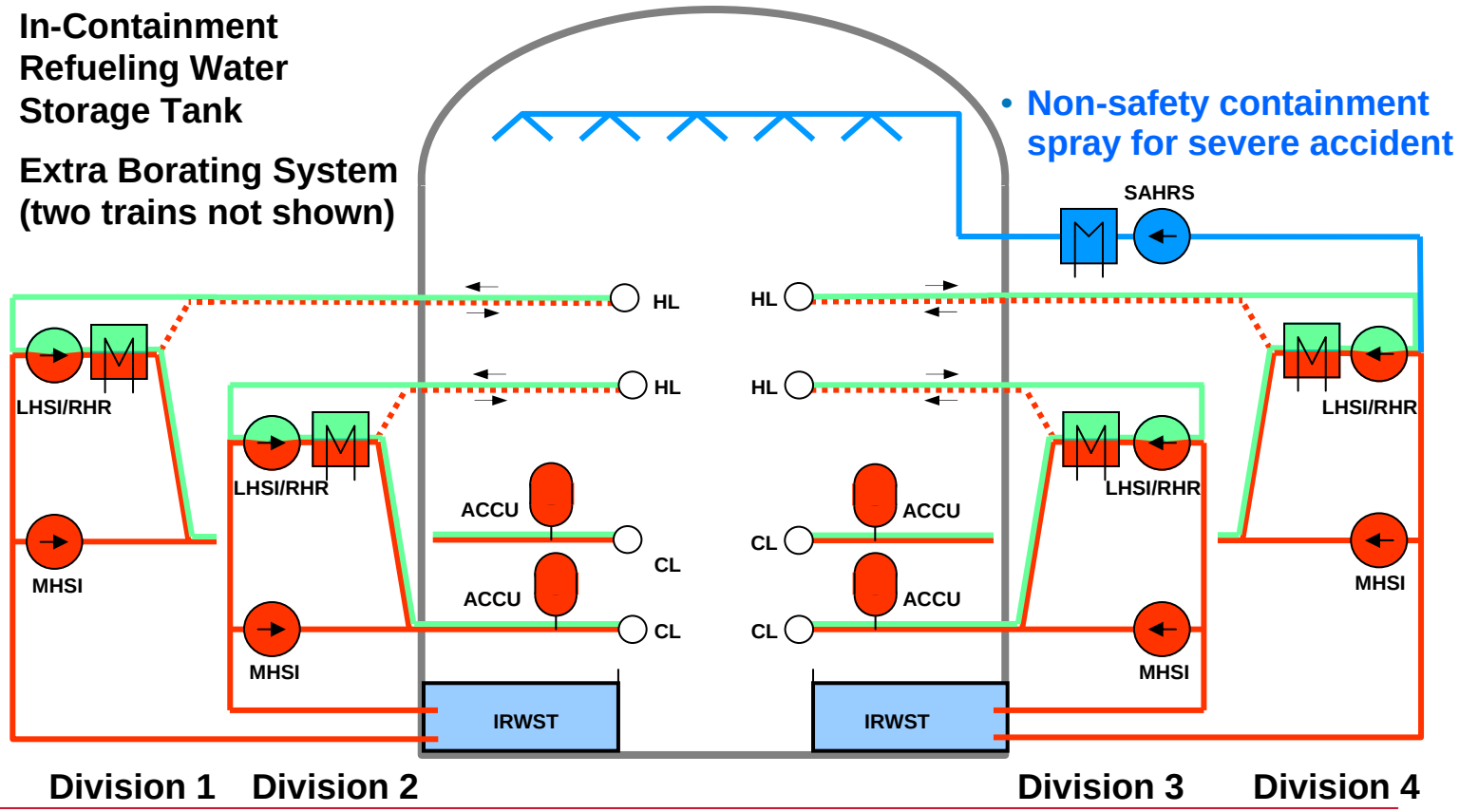

Main Safety Systems Secondary Side

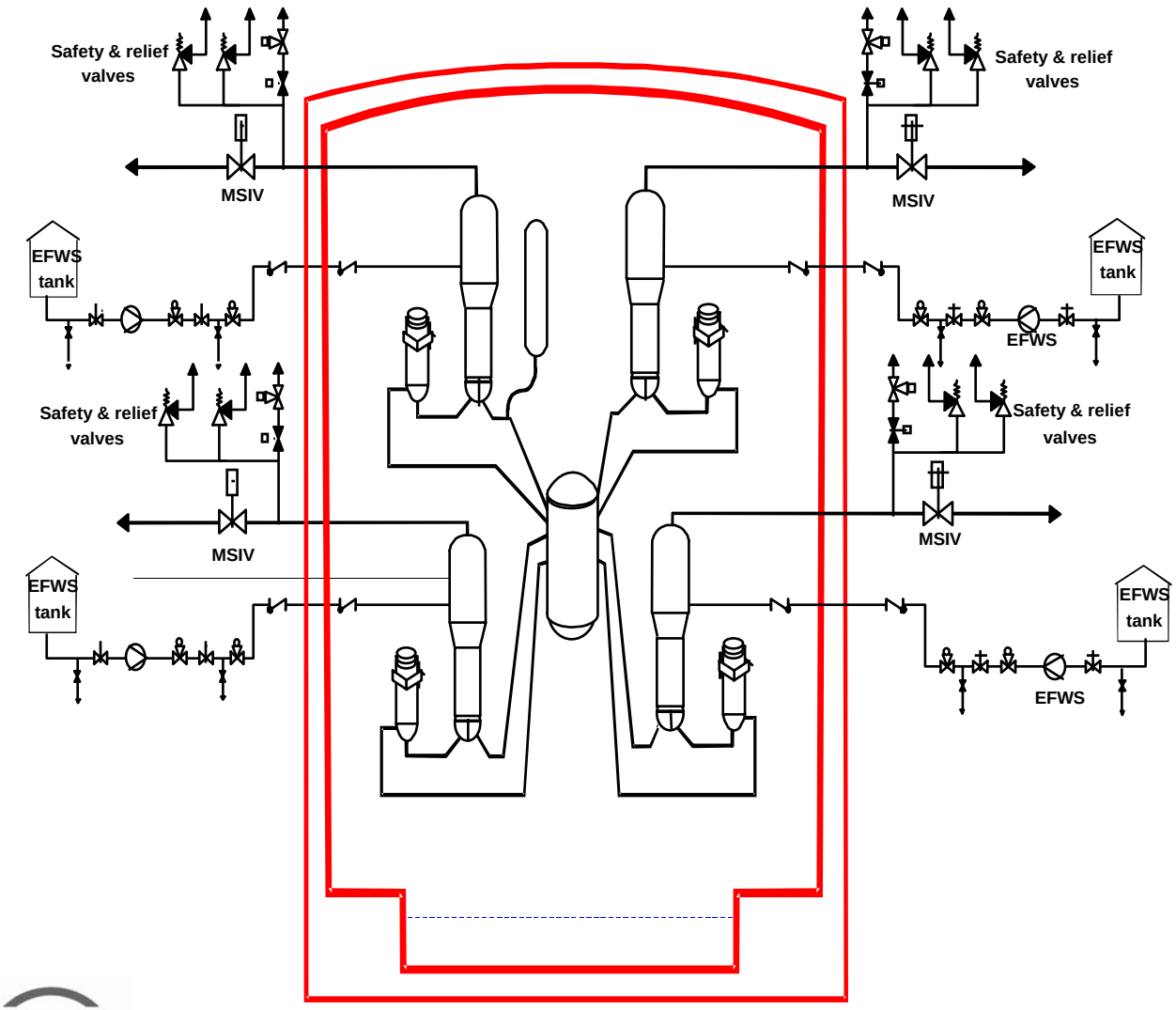

- Safety-related main steam relief train
- Four separate Emergency Feed Water Systems (EFWS)
- Separate power supply for each
- 2/4 EFWS also powered by Station Black Out (SBO) diesels
- Interconnecting headers at EFWS pump suction & discharge

Protection From External Hazards
Shielded Containment

- Inner wall post-tensioned concrete with steel liner
- Outer wall reinforced concrete
- Protection against airplane crash
- Protection against external explosions
- Annulus filtered to reduce radioisotope release

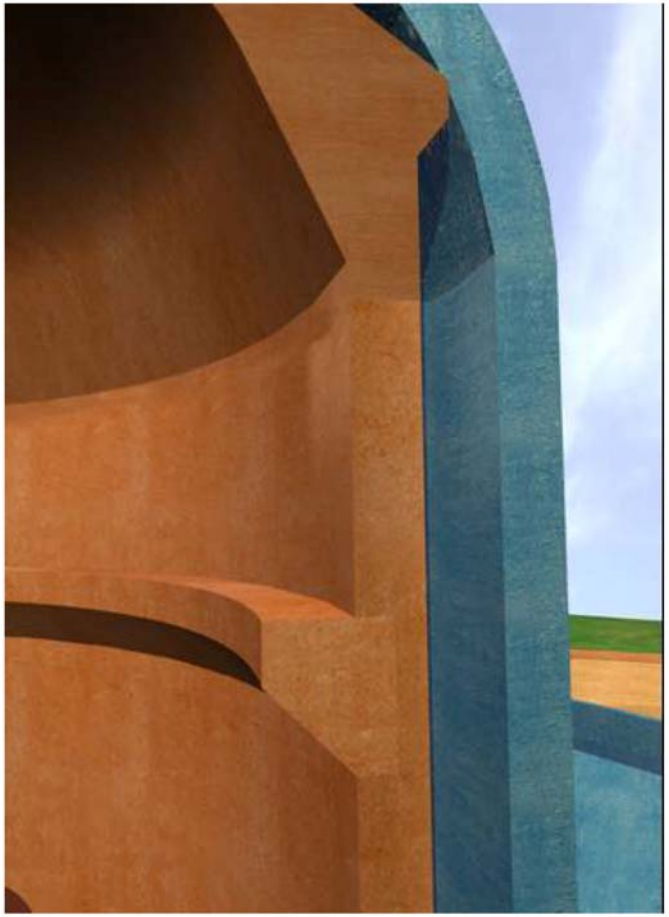

Protection From External Hazards

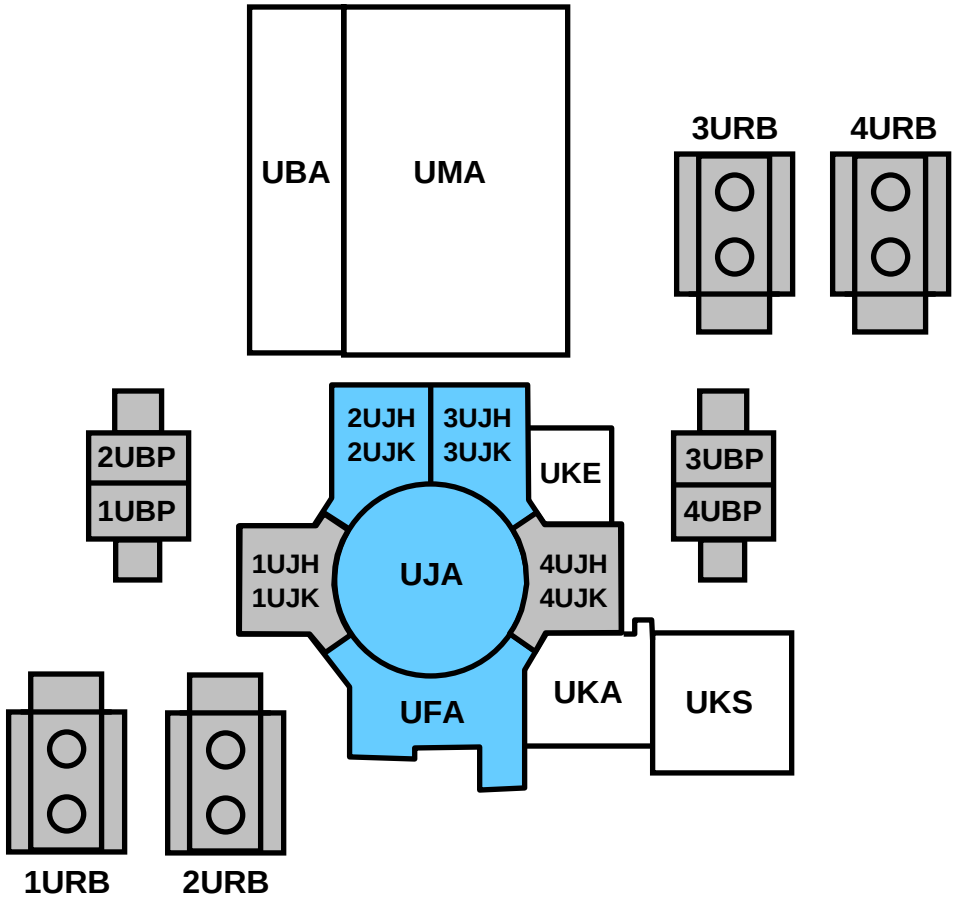

UBA	Switchgear Building
UBP	Emergency Power Generating Building
UFA	Fuel Building
UJA	Reactor Building
UJH	Safeguard Building Mechanical
UJK	Safeguard Building Electrical
UKA	Nuclear Auxiliary Building
UKE	Access Building
UKS	Radioactive Waste Processing Building
UMA	Turbine Building
URA	Cooling Tower Structure
URB	Essential Service Water Cooling Tower Structure

PROTECTED BY SHIELD BUILDING

PROTECTED BY PHYSICAL SEPARATION

NOT PROTECTED

Severe Accident Mitigation

- **Prevention of high-pressure melt-through using Primary Depressurization System**
- **Passive ex-vessel melt stabilization, conditioning and cooling**
- **Long-term melt cooling and containment protection using active cooling system**
- **Control of H_2 concentration using passive autocatalytic recombiners**

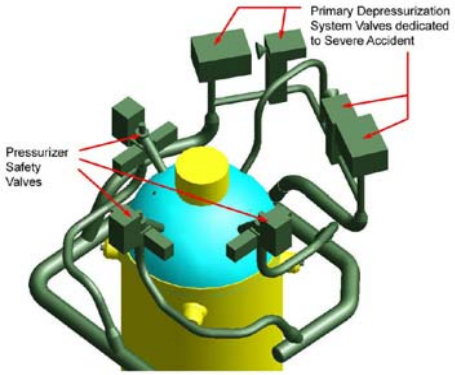

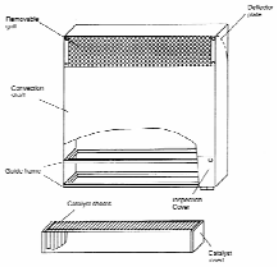

U.S. EPR Design Certification Application

- U.S. EPR design reflects an evolutionary, active plant design
  - Exemptions and exceptions minimized
  - No RTNSS
- Applies proven analytical methodologies
- Preapplication activities
  - Unique Design Features technical report developed
  - Meetings with technical staff
  - Topical reports submitted in selected areas
  - Established local AREVA NP office
- FSAR format and content is consistent with key NRC guidance documents
  - Regulatory Guide 1.206, “Combined License Applications for Nuclear Power Plants (LWR Edition)”
  - NUREG-0800, "Standard Review Plan for the Review of Safety Analysis Reports for Nuclear Power Plants“
    - Technical Report Summary provided

Chapter 2: Site Characteristics

- **Topics**
  - **Site characteristics**
  - **Geography and demography**
  - **Nearby industrial, transportation, and military facilities**
  - **Meteorology**
  - **Hydrologic engineering**
  - **Geology, seismology, and geotechnical engineering**
- **U.S. EPR design is based on a set of conservatively established design parameters**
- **Chapter 2 provides list of assumed design parameters for comparison with site-specific data and characteristics by a COL applicant**

Chapter 4: Reactor

- **Topics**
  - **Fuel System Design**
  - **Nuclear Design**
  - **Thermal-Hydraulic Design**
  - **Reactor Materials**
  - **Functional Design of Reactivity Control Systems**
- **U.S. EPR design features are fundamentally the same as previous PWR designs**
- **Design methods and codes for mechanical, nuclear, and thermal hydraulic designs approved for use in ANP-10263PA**
- **Key differences from previous PWR designs include:**
  - **14-foot active fuel length**
  - **Stainless steel "heavy" reflector**
  - **Aeroball Measurement System used for calibration of core monitoring neutronics computer codes and fixed incore Co-59 self-powered neutron detectors (SPND)**
  - **Online monitoring of DNB and LHGR accomplished through power distribution reconstruction from SPNDs**

Chapter 5: Reactor Coolant System and Connected Systems

- **Topics**
  - Integrity of the reactor coolant pressure boundary
  - Reactor vessel
  - Component and subsystem design
- **U.S. EPR design is typical of four-loop PWR designs**
  - Four U-tube steam generators
  - Four reactor coolant pumps
- **Key differences**
  - No reactor pressure vessel lower head penetrations
  - Reactor coolant pump shaft seal isolation for station blackout
  - Pressurizer safety relief valves provide overpressure protection at power and at low temperature
  - Alloy 690

Chapter 8: Electric Power

- **Topics**
  - **Offsite power system**
  - **Onsite power system**
  - **Station blackout**
- **U.S. EPR design features fundamentally same as previous reactor designs**
  - **Two independent offsite feeds**
  - **Degraded voltage protection for emergency buses**
- **Key differences**
  - **Four Emergency Diesel Generators (Class 1E) and four 2-hour Uninterruptible Power Supplies (Class 1E)**
  - **Alternate electrical feed configuration to facilitate on-line maintenance**
  - **No intervening non-safety buses in Class 1E distribution system**
  - **Two SBO diesel generators as Alternate AC source**
  - **No fast transfer of plant loads during startup, shutdown, or plant trip**
  - **Island mode operation**

Chapter 10: Steam and Power Conversion System

- **Topics**
  - Turbine generator
  - Main steam supply system
  - Other features of steam and power conversion system
  - Emergency feedwater system
- **U.S. EPR design features fundamentally the same as previous designs**
  - Seven stages of regenerative feedwater heating
  - Two stages of reheat
  - Multi-pressure condenser
- **Key differences**
  - Single Flow High Pressure (HP) Turbine and Single Flow Intermediate Pressure (IP) Turbine in a common casing
  - Two redundant and diverse electrical overspeed trip systems for the Turbine Generator
  - Safety-grade Main Steam Relief Train (MSRT) for overpressure protection and safety-grade secondary depressurization
  - Stand alone Startup/Shutdown Feedwater System
  - Four motor-driven Emergency Feedwater pumps

Chapter 12: Radiation Protection

- **Topics**
  - **Ensuring that occupational radiation exposures are as low as reasonably achievable**
  - **Radiation sources**
  - **Radiation protection design features**
  - **Dose assessment**
  - **Operational radiation protection program (COL applicant responsibility)**
- **U.S. EPR design reflects operating experience and implements As Low as Reasonably Achievable (ALARA) principles in the design process**
  - **Physical plant layout that includes compartmentalization and dedicated ventilation**
  - **Material selection reduces activation/corrosion products**
  - **Permanent shielding**
  - **Minimization of contamination following industry lessons learned**
  - **ALARA applied in the design process**
- **The occupational dose of 50 person-rem demonstrates that ALARA has been an integral part of the U.S. EPR design process**

Chapter 17: Quality Assurance

- **Three main topics**
  - **Quality Assurance Program Description**
    - Addressed in "AREVA NP Inc. Quality Assurance Plan (QAP) for Design Certification of the U.S. EPR Topical Report," ANP-10266A
    - Based on 18-point criteria of 10 CFR 50 Appendix B and ANSI/ASME NQA-1-1994
    - Prepared using guidance provided in NUREG-0800, Standard Review Plan, Section 17.5
  - **Reliability Assurance Program**
    - Purpose is to maintain reliability of risk-significant SSCs
    - Prepared using the guidance provided in NUREG-0800, Standard Review Plan, Section 17.4
  - **Maintenance Rule Program**
    - Purpose is to monitor effectiveness of plant maintenance activities
    - COL applicant will describe program for Maintenance Rule implementation

List of Acronyms

- AC – Alternating Current
- ACCU – Accumulator
- ALARA – As Low As Reasonably Achievable
- CDF – Core Damage Frequency
- CL – Cold Leg
- COL – Combined Operating License
- DG – Diesel Generator
- DNB – Departure from Nucleate Boiling
- EFWS – Emergency Feedwater System
- ESF – Engineered Safety Features
- HL – Hot Leg
- HP – High Pressure
- IP – Intermediate Pressure
- IRWST – In-containment Refueling Water Storage Tank
- LHGR – Linear Heat Generation Rate
- LHSI – Low Head Safety Injection System
- LLW – Low Level Waste
- MHSI – Medium Head Safety Injection System
- MSRT – Main Steam Relief Train
- MSIV – Main Steam Isolation Valve
- PWR – Pressurized Water Reactor
- RCS – Reactor Coolant System
- RHR – Residual Heat Removal
- RTNSS - Regulatory Treatment of Non-Safety Systems
- SAHRS – Severe Accident Heat Removal System
- SBO – Station Blackout
- SIS – Safety Injection System
- SG – Steam Generator
- SPND - Self-powered Neutron Detectors
- SSC - Structures, Systems and Components

AREVA

United States Nuclear Regulatory Commission

Protecting People and the Environment

Presentation to the ACRS Full Committee - 571st Meeting

Briefing on EPR Design Certification Application Safety Evaluation Report with Open Item for Chapters 2, 4, 5, 8, 10, 12, and 17

Getachew Tesfaye
Project Manager

April 8, 2010

Major Milestones Chronology

12/02/2004	Pre-application activities began
12/11/2007	Design Certification Application submitted
02/25/2008	Application accepted for review (docketed)
03/26/2008	Review scheduled published
01/29/2009	Phase 1 review completed
03/19/2009	Revised schedule published
05/29/2009	U.S. EPR FSAR, Revision 1 submitted
06/25/2009	Revised schedule published
Aug 09 to Mar,10	Phase 2 review completed for Chapters 2,4, 5, 8,10, 11, 12, 16, 17 and 19. Phase 3 is completed for Chapters 2, 4, 5, 8, 10, 12, and 17
02/16/2010	Revised schedule published

Review Schedule

Task	Target Date
Phase 1 - Preliminary Safety Evaluation Report (SER) and Request for Additional Information (RAI)	Completed
Phase 2 - SER with Open Items	December 21, 2010
Phase 3 – Advisory Committee on Reactor Safeguards (ACRS) Review of SER with Open Items	February 25, 2011
Phase 4 - Advanced SER with No Open Items	July 2011
Phase 5 - ACRS Review of Advanced SER with No Open Items	October 2011
Phase 6 – Final SER with No Open Items	December 2011
Rulemaking	June 2012

Review Strategy

- Pre-application activities
- Frequent interaction with the applicant
  - Teleconferences
  - Audits
  - Public meetings
- Use of Electronic RAI System (eRAI)
- Phase discipline

Summary of SER with OI: Chapter 2 Site Characteristics

SRP Section/Application Section		Number of RAI Questions	Number of SER Open Items
2.0	Site Characteristics	2	2
2.1	Geography and Demography	0	0
2.2	Nearby Industrial, Transportation, and Military Facilities	0	0
2.3	Meteorology	31	10
2.4	Hydrologic Engineering	4	0
2.5	Geology, Seismology, and Geotechnical Engineering	8	1
2.6	COL Information Items	0	0
Totals		45	13

Summary of SER with OI: Chapter 4 Reactor

SRP Section/Application Section		Number of RAI Questions	Number of SER Open Items
4.2	Section Title Fuel System Design	15	2
4.3	Section Title Nuclear Design	24	2
4.4	Section Title Thermal-Hydraulic Design	37	3
4.5.1	Section Title Control Rod Drive System Structural Materials	7	2
4.5.2	Section Title Reactor Internals and Core Support Materials	11	3
4.6	Section Title Functional Design of Reactivity Control Systems	10	2
Totals		104	14

Summary of SER with OI: Chapter 5 Reactor Coolant System and Connected Systems

SRP Section/Application Section		Number of RAI Questions	Number of SER Open Items
5.2	Section Title Integrity of the Reactor Coolant Pressure Boundary	51	12
5.3	Section Title Reactor Vessel	27	8
5.4	Section Title Component and Subsystem Design	49	5
Totals		127	25

Summary of SER with OI: Chapter 8 Electric Power

SRP Section/Application Section		Number of RAI Questions	Number of SER Open Items
8.1	Introduction	4	0
8.2	Offsite Power System	7	0
8.3.1	Alternating Current (AC) Power Systems (Onsite)	24	0
8.3.2	Direct Current (DC) Power Systems (Onsite)	5	0
8.4	Station Blackout	9	0
Totals		49	0

Summary of SER with OI: Chapter 10 Steam and Power Conversion Systems

U.S.NRC
United States Nuclear Regulatory Commission
Protecting People and the Environment

SRP Section/Application Section		Number of RAI Questions	Number of SER Open Items
10.2	Turbine-Generator	7	1
10.2.3	Turbine Rotor Integrity	23	7
10.3	Main Steam Supply System	2	0
10.3.6	Steam and Feedwater System Materials	12	2
10.4.1 10.4.2 10.4.3 10.4.4 10.4.5	Main Condensers, Main Condenser Evacuation System, Turbine Gland Sealing System, Turbine Bypass System, Circulating Water System	5	0
10.4.6	Condensate Polishing System	6	0
10.4.7	Condensate and Feedwater System	3	0
10.4.8	Steam Generator Blowdown System	4	0
10.4.9	Emergency Feedwater System	13	2
Totals		75	12

Summary of SER with OI: Chapter 12 Radiation Protection

SRP Section/Application Section		Number of RAI Questions	Number of SER Open Items
12.1	Ensuring that Occupational Radiation Exposures are ALARA	0	0
12.2	Radiation Sources	6	2
12.3-12.4	Radiation Protection Design Features	18	7
12.5	Operational Radiation Protection Program	3	1
Totals		26	10

Summary of SER with OI: Chapter 17 Quality Assurance

SRP Section/Application Section		Number of RAI Questions	Number of SE Open Items
17.0	Quality Assurance and Reliability Assurance	0	0
17.1	Quality Assurance During Design	0	0
17.2	Quality Assurance During the Operations Phases	0	0
17.3	Quality Assurance Program Description	0	0
17.4	Reliability Assurance Program	22	1
17.5	Quality Assurance Program Description	2	1
17.6	Description of Applicant's Program for Implementation of 10 CFR 50.65, the Maintenance Rule	2	0
	Totals	**26**	**2**

ACRS Phase 3 Review Plan

U.S.NRC
United States Nuclear Regulatory Commission
Protecting People and the Environment

FSAR Chapters Grouped by Phase 2 Completion Date							
Group	Chapters	Chapter Issuance (Phase 2)	ACRS Meeting (Phase 3)	Group	Chapters	Chapter Issuance (Phase 2)	ACRS Meeting (Phase 3)
1A	2	09/21/2009	**11/03/2009, Done**	**3A**	13	06/01/2010	**TBD**
	8	07/10/2009			15	05/11/2010	
1B	10	09/04/2009	**11/19/2009, Done**	**3B**	7	08/02/2010	**TBD**
	12	10/09/2009			18	08/02/2010	
2A	17	01/12/2010	**02/18/2010 02/19/2010 17 Done 19 will be completed on 04/21/2010**	**4A**	6	09/15/2010	**TBD**
	19	01/15/2010			9	09/09/2010	
2B	4	02/03/2010	**03/03/2010, Done**				
	5	02/03/2010		**4B**	1	10/29/2010	**TBD**
2C	11	03/01/2010	**04/06/2010 Done**		3	10/29/2010	
	16	03/01/2010			14	10/29/2010	
Closing: ▪General Plant Description (final) and summation of open items ▪Cross-cutting issues and re-visit earlier chapters as needed							**TBD**

U.S.NRC

UNITED STATES NUCLEAR REGULATORY COMMISSION

Protecting People and the Environment

NRC Staff Review of NEDC-33173P, Supplement 3 "Supplement for GNF2 Fuel"

Concluding Remarks

Dr. Peter Yarsky

NRR/DSS/SNPB

Concluding Remarks

- IMLTR Supplement 3 seeks to extend NRC approval to cover the GNF2 fuel design
- Several evolutionary design features were incorporated in GNF2 to improve fuel performance

Scope of Staff Review

- The staff review addressed the applicability of interim methods to calculations with GNF2 fuel
- Addressed all topical areas addressed in the staff review of the IMLTR

Review Determination

- GNF2 design features do not pose an inherent challenge to the capability of the analysis methods
- Qualification basis of the methods for GNF2 is the same as previously reviewed
- Performance of the methods is essentially the same

Review Outcome

- The staff's SE extends applicability of the IMLTR and the associated SE (including limitations and conditions) to GNF2
- Limitation 22 will be revised accordingly to document staff approval up to designs including GNF2

April 8, 2010
ACRS Full Committee Meeting

NEDC-33173P - Supplement 3 Applicability of GE Methods to Expanded Operating Domains - Supplement for GNF2 Fuel

Jim Harrison, GE Hitachi

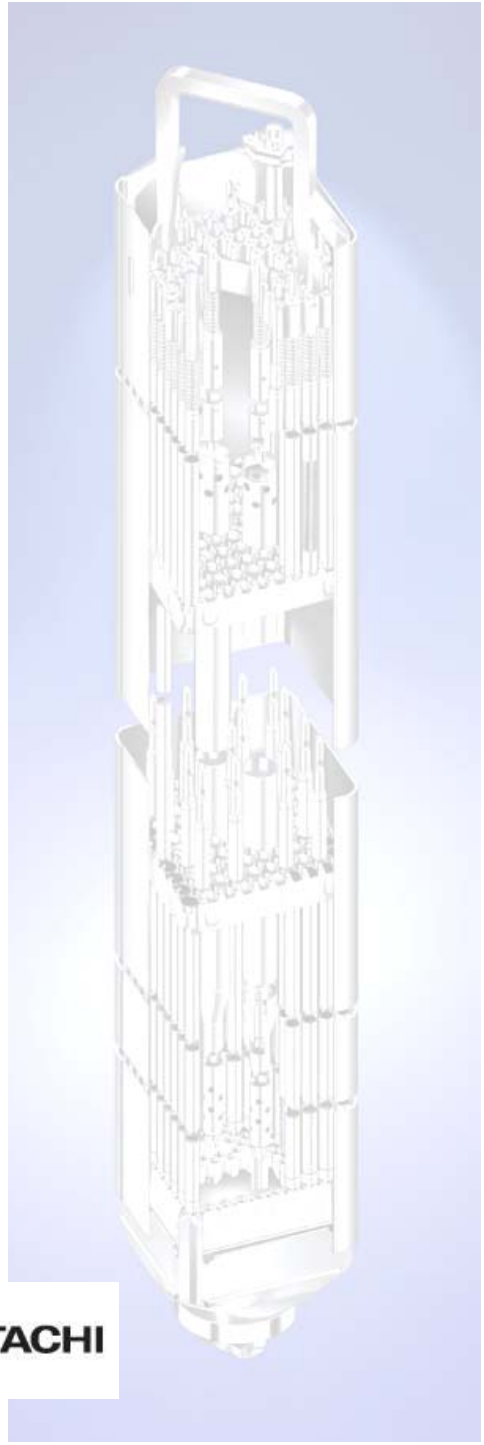

Global Nuclear Fuel
A Joint Venture of GE, Toshiba, & Hitachi

HITACHI

As Approved – NEDC-33173P Applicability of GE Methods to Expanded Operating Domains (IMLTR)

24 Limitations in NRC Safety Evaluation

- Limited to the GE14 Fuel and Older Products
- Penalties:

  SLMCPR Adder: 0.02 for EPU and 0.03 for M+

  OLMCPR Adder: 0.01 for EPU/M+

  GESTR-M: 350 psi Pcrit Reduction
- Use PRIME when approved

Supplement 3 - GNF2 Supplement

- Limitation 22 restricts the applicability to GE14 & earlier fuel designs
- Supplement 3 extends applicability to GNF2
- No changes to any other limitations

IMLTR Supplement Flow

1	2	3	4
OLMCPR Penalty Removal	SLMCPR Penalty Removal	GNF-2 Applicability	PRIME
Supplemental Void Fraction / Pressure Drop	Supplemental Gamma Scan Reports	Supplemental Report	Implementation Plan
Submitted April 6, 2010	Submitted August 14, 2009 Have RAIs Estimated 18 mo Review	Submitted July 31, 2009 SE Complete	Submitted July 10, 2009 SE Complete
			Implement into Downstream Codes ---- NRC Audit
Supplemental SE	Supplemental SE	Supplemental SE	Supplemental SE

GNF Global Nuclear Fuel
A Joint Venture of GE, Toshiba, & Hitachi

HITACHI