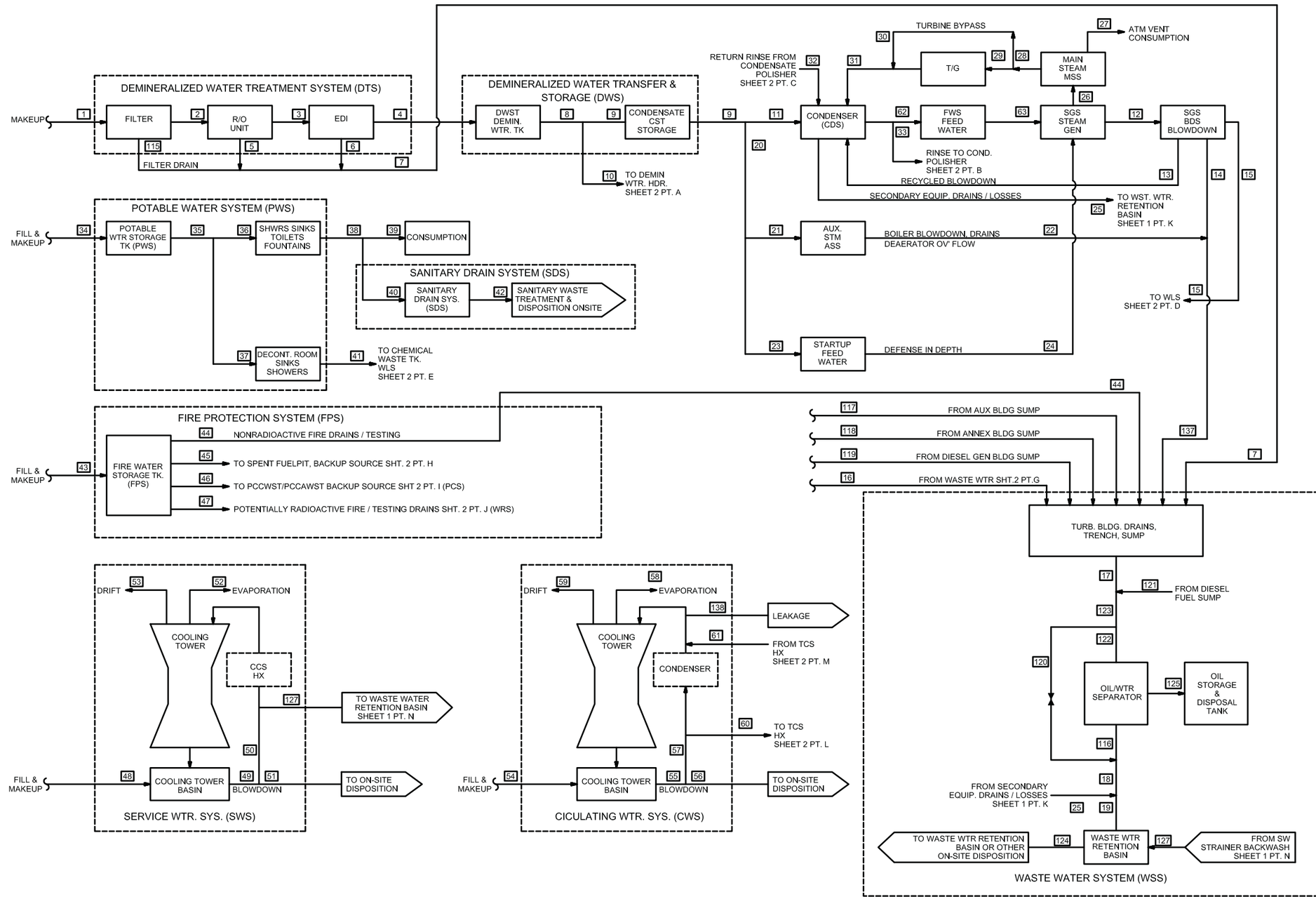

Progress Energy Carolinas

Shearon Harris Nuclear Power Plant
Units 2 and 3
Part 3, Environmental Report

New Hill, North Carolina

AP1000 Water Balance Volumes and Flow Rates by Path (Sheet 1 of 2)

FIGURE 3.3-2

Rev 0

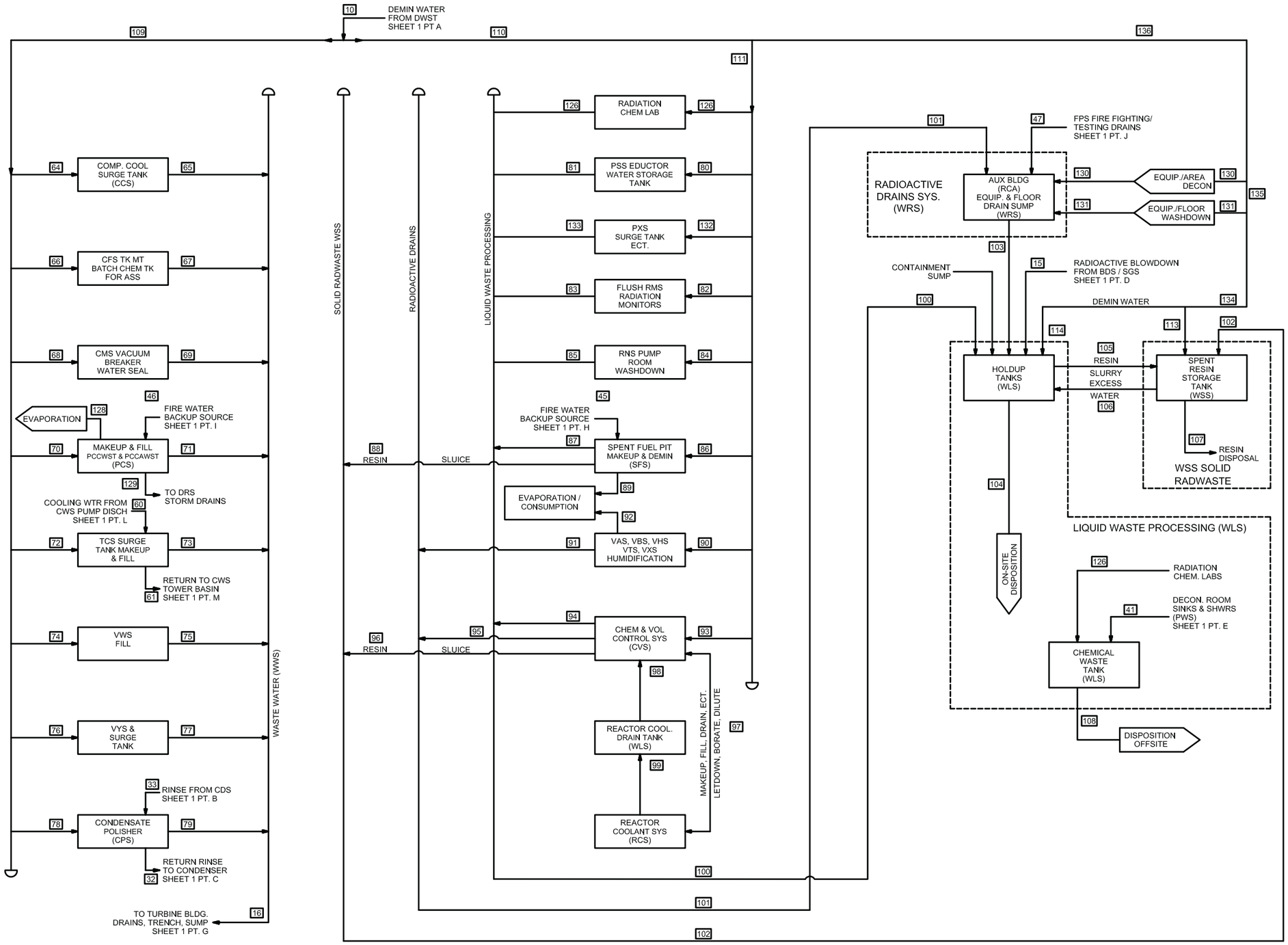

Progress Energy Carolinas

Shearon Harris Nuclear Power Plant
Units 2 and 3
Part 3, Environmental Report

New Hill, North Carolina

AP1000 Water Balance Volumes and Flow Rates by Path (Sheet 2 of 2)

FIGURE 3.3-2

Rev 0