Chapter 9 Auxiliary Systems

9.1 Fuel Storage and Handling

This section of the referenced DCD is incorporated by reference with the following departures and/or supplements.

9.1.1.7 Safety Evaluation

Structural Design

STD COL 9.1-4-A Delete the last sentence of the third paragraph.

Protection Features of the New Fuel Storage Facilities

STD COL 9.1-4-A Delete the last sentence of the third paragraph

9.1.4 Light Load Handling System (Related to Refueling)

9.1.4.13 Refueling Operations

Add the following at the end of this section.

STD COL 9.1-4-A Section 13.5 requires development of fuel handling procedures. Fuel handling procedures address the status of plant systems required for refueling; inspection of replacement fuel and control rods; designation of proper tools; proper conditions for spent fuel movement and storage; proper conditions to prevent inadvertent criticality; proper conditions for fuel cask loading and movement; and status of interlocks, reactor trip circuits and mode switches. These procedures provide instructions for use of refueling equipment, actions for core alterations, monitoring core criticality status, and accountability of fuel for refueling operations. **[START COM 9.1-001]** Fuel handling procedures are developed six months before fuel receipt to allow sufficient time for plant staff familiarization, to allow NRC staff adequate time to review the procedures, and to develop operator licensing examinations. **[END COM 9.1-001]**

Personnel qualifications and training for fuel handlers are addressed in Section 13.2.

9.1.4.19 Inspection and Testing Requirements

Add the following at the end of this section.

STD COL 9.1-4-A

Section 17.5 describes the QA program that is applied to monitoring, implementing, and ensuring compliance with fuel handling procedures. As part of normal plant operations, the fuel-handling equipment is inspected for operating conditions before each refueling operation. During the operational testing of this equipment, procedures are followed that will affirm the correct performance of the fuel-handling system interlocks. Other maintenance and test procedures are developed based on manufacturer's requirements.

9.1.5 Overhead Heavy Load Handling Systems (OHLHS)

9.1.5.6 Other Overhead Load Handling System

Add the following at the end of this section.

STD COL 9.1-5-A

Special Lifting Devices

Testing and Inspection of special lifting devices follow the guidlines of ANSI N14.6.

Other Lifting Devices

Slings used for heavy load lifts meet the requirements specified for slings in ANSI B30.9 and the guidance specified in NUREG-0612, Section 5.1.1(5).

9.1.5.8 Operational Responsibilities

Replace this section with the following.

STD COL 9.1-5-A

Procedures

Section 13.5 requires the development of administrative procedures to control heavy loads prior to fuel load to allow sufficient time for plant staff familiarization, to allow NRC staff adequate time to review the procedures, and to develop operator licensing examinations. Heavy load handling procedures address:

- Equipment identification
- Required equipment inspections and acceptance criteria prior to performing lift and movement operations
- Approved safe load paths and exclusion areas
- Safety precautions and limitations
- Special tools, rigging hardware, and equipment required for the heavy load lift
- The use of non-metalic slings with single failure proof lifting devices
- Rigging arrangement for the load
- Adequate job steps and proper sequence for handling the load

Safe load paths are defined for movement of heavy loads to minimize the potential for a load drop on irradiated fuel in the reactor vessel or spent fuel pool or on safe shutdown equipment. Paths are defined in procedures and equipment layout drawings. Safe load path procedures address the following general requirements:

- When heavy loads must be carried directly over the spent fuel pool, reactor vessel or safe shutdown equipment, procedures will limit the height of the load and the time the load is carried.
- When heavy loads could be carried (i.e., no physical means to prevent) but are not required to be carried directly over the spent fuel pool, reactor vessel or safe shutdown equipment, procedures will define an area over which loads shall not be carried so that if the load is dropped, it will not result in damage to spent fuel or operable safe shutdown equipment or compromise reactor vessel integrity.
- Where intervening structures are shown to provide protection, no load travel path is required.
- Defined safe load paths will follow, to the extent practical, structural floor members.
- When heavy loads movement is restricted by design or operational limitation, no safe load path is required.
- Supervision is present during heavy load lifts to enforce procedural requirements.

Inspection and Testing

Cranes addressed in this section are inspected, tested, and maintained in accordance with Section 2-2 of ANSI B30.2, Section 11.2 of ANSI B30.11, or Sections 16-1.2.1 and 16-1.2.3 of ANSI B30.16 with the exception that tests and inspections may be performed prior to use for infrequently used cranes. Prior to making a heavy load lift, an inspection of the crane is made in accordance with the above applicable standards.

Training and Qualification

Training and qualification of operators of cranes addressed in this section meet the requirements of ANSI B30.2, and include the following:

- Knowledge testing of the crane to be operated in accordance with the applicable ANSI crane standard.
- Practical testing for the type of crane to be operated.
- Supervisor signatory authority on the practical operating examination.
- Applicable physical requirements for crane operators as defined in the applicable crane standard.

Quality Assurance

Procedures for control of heavy loads are developed in accordance with Section 13.5. In accordance with Section 17.5 and DCD Section 9.2.1.5, other specific quality program controls are applied to the heavy loads handling program, targeted at those characteristics or critical attributes that render the equipment a significant contributor to plant safety.

9.1.5.9 Safety Evaluations

Add the following at the end of this section.

STD COL 9.1-5-A

No heavy loads are identified that are outside the scope of the certified design. In addition, there is no heavy load handling equipment, nor interlocks associated with heavy load handling equipment, outside the scope of certified design.

9.1.6 COL Information

9.1-4-A Fuel Handling Operations

STD COL 9.1-4-A This COL item is addressed in Subsection 9.1.4.13 and Subsection 9.1.4.19.

9.1-5-A Handling of Heavy Loads

STD COL 9.1-5-A This COL item is addressed in Subsection 9.1.5.6, Subsection 9.1.5.8, and Subsection 9.1.5.9.

9.2 Water Systems

9.2.1 Plant Service Water System

This section of the referenced DCD is incorporated by reference with the following departures and/or supplements.

9.2.1.2 System Description

Summary Description

Replace the Summary Description with the following information.

EF3 CDI The Plant Service Water System (PSWS) rejects heat from nonsafety-related RCCWS and TCCWS heat exchangers to the environment. The source of cooling water to the PSWS is from either the normal power heat sink (NPHS) or the auxiliary heat sink (AHS). A natural draft cooling tower is utilized for the NPHS and mechanical draft cooling towers are utilized for the AHS with a crosstie line to permit routing of the plant service water to either heat sink. Table 9.2-201 provides information on the PSWS cooling tower design characteristics.

EF3 CDI A simplified diagram of the PSWS is shown in Figure 9.2-205.

Detailed System Description

EF3 COL 9.2.1-1-A Delete the first sentence of the fifth paragraph.

Replace the eighth sentence in the sixth paragraph with the following.

EF3 COL 9.2.1-1-A PSWS basin water is treated for biofouling, scaling, and suspended matter with biocides, anti-scalants, and dispersants, respectively. In

addition, the anti-scalants and/or dispersants contain corrosion inhibitors as appropriate. This water treatment regime mitigates the long-term effects of fouling and corrosion within the PSWS.

PSWS materials are compatible with the PSWS water treatment regime. Based on the selected regime, carbon steel that meets ASTM standards is used as the pipe material for above-grade portions of the PSWS.

Fiberglass pressure pipe that meets the requirements of ASME B31.1, Power Piping Code, Nonmandatory Appendix III, Rules for Nonmetallic Piping and Piping Lined with Nonmetals, including applicable ASTM and AWWA standards, is used for below-grade piping. Fiberglass pressure pipe is not susceptible to internal corrosion from the chemically treated water or to external corrosion from ground contact.

Analysis of routine PSWS basin grab samples will detect RCCWS leakage, which may contain low levels of radioactivity, into the PSWS. This provides the action required by NRC Inspection and Enforcement Bulletin No. 80-10.

Replace the eighth paragraph with the following information.

EF3 CDI

Fermi 3 design heat loads are shown in DCD Table 9.2-1.The PSWS component design characteristics are shown in Table 9.2-201.

Delete the last paragraph.

Operation

Add the following text to the end of the second paragraph of this section.

During normal power operation, PSWS flow is directed to either the NPHS cooling tower or the AHS cooling towers where heat removed from the RCCWS and TCCWS is rejected. When PSWS uses the NPHS, the NPHS basin provides makeup to the AHS basin. When PSWS uses the AHS, makeup to the AHS basin is provided from the Station Water System (SWS).

9.2.1.6 COL Information

9.2.1-1-A Material Selection

EF3 COL 9.2.1-1-A

This COL item is addressed in Subsection 9.2.1.2.

9.2.2 Reactor Component Cooling Water System

This section of the referenced DCD is incorporated by reference with no departures or supplements.

9.2.3 Makeup Water System

This section of the referenced DCD is incorporated by reference with the following departures and/or supplements.

9.2.3.2 System Description

Replace the introductory text and the Demineralization Subsystem portions of this section with the following.

EF3 CDI

The MWS consists of two subsystems: 1) the demineralization subsystem and 2) the storage and transfer subsystem. The makeup water transfer pumps and the demineralization subsystem are sized to meet the demineralized water needs of all operational conditions except for shutdown/refueling/startup. During the shutdown/refueling/startup mode, the increases in plant water consumption may require use of a temporary demineralization subsystem and temporary makeup water transfer pumps to be used as a supplemental water source.

The MWS major equipment is housed entirely in the Service Water/Water Treatment Building except for the demineralized water storage tank (which is outdoors and adjacent to this building) and the distribution piping to the interface systems. Freeze protection is provided for the demineralized water storage tank and piping exposed to freezing conditions.

The MWS equipment and associated piping in contact with demineralized water are fabricated from corrosion resistant materials such as stainless steel to prevent contamination of the makeup water.

Table 9.2-202 lists the major MWS components.

Demineralization Subsystem

Feedwater for the demineralization subsystem is provided by the Frenchtown Township municipal water system. Production of demineralized water by the demineralization subsystem can be initiated and shut down either automatically (based on the demineralized water storage tank level) or manually. Feedwater is treated in the following sequence:

1. Activated carbon filters
2. Reverse osmosis modules
3. Mixed bed demineralizers

Each reverse osmosis (RO) module includes cartridge filters. The RO modules are separated by an inter-stage break tank. Chemical addition is provided upstream of the RO module cartridge filters as required. High pressure pumps provide the pressure required for flow through the RO unit membranes. The RO unit reject flow is sent to the blowdown. The RO product water is temporarily stored in an RO product water storage tank before being pumped by one of the forwarding pumps to the mixed bed demineralizer unit. Operation of the RO high-pressure pumps is interlocked with that of the forwarding pumps. The mixed bed demineralizer consists of both strong cation and anion resins in the same vessel that polishes the RO product water. The mixed bed unit effluent is monitored for water quality. This effluent is automatically recirculated to the station water storage tank until the water quality requirements are met. Makeup water is then delivered to the MWS demineralized water storage tank. The modular design of the RO unit and the mixed bed unit allows continuous demineralized water production. Cleaning, back flushing, or module removal are manual operations based on elevated differential pressure across the module or total flow through the system. No regeneration of mixed bed modules is performed on-site.

9.2.4 Potable and Sanitary Water System

This section of the referenced DCD is incorporated by reference with the following departures and/or supplements.

Delete the first paragraph and replace the last paragraph with the following.

9.2.4.1 Design Bases

Safety Design Basis

EF3 CDI

The Potable Water System (PWS) and Sanitary Waste Discharge System (SWDS) do not perform any safety-related function. Therefore, the PWS and SWDS have no safety design bases.

Power Generation Design Basis

The PWS and SWDS are designed to provide potable water supplies and sewage collection necessary for normal plant operation and shutdown periods. The PWS provides sufficient supply and is designed to supply 12.6 liters per second (200 gallons per minute) of potable water during peak demand periods. The PWS is designed to produce and maintain the quality of water required by the authorities having jurisdiction.

9.2.4.2 System Description

Potable Water System

The PWS consists of pumps, water heaters, and interconnecting piping and valves as shown on Figure 9.2-201. PWS component characteristics are shown in Table 9.2-203. Treated water from the Frenchtown Township system is supplied to the potable water storage tank. In addition to non-radiological areas, potable water is provided to areas where inadvertent backflow into the system could result in radiological contamination of the potable water. For those branches with outlets in areas where the potential for radiological contamination exists, backflow prevention is provided through the installation of backflow preventers.

Sanitary Waste Discharge System

The SWDS consists of waste basin, wet well, septic tank, settling tank, wet well pumps, sewage discharge pumps and associated valves, piping and controls. Sewage is pumped from the septic tank to the Frenchtown Township Sewage Treatment facility. Since the effluent from the SWDS is routed to a water treatment facility, and not discharged to the environment, it is not necessary for the effluent to meet federal, state and local permits. A simplified diagram of the SWDS is shown in Figure 9.2-202.

Analysis of routine Septic Tank grab samples will detect events that might contaminate the SWDS down streamof the Septic Tank. This provides the action required by Inspection and Enforcement Bulletin No. 80-10.

9.2.4.3 Safety Evaluation

Potable Water System

The PWS has no safety-related function and is not connected to any safety-related structure, system or component. Failure of the system does not compromise any safety-related equipment or component and does not prevent safe shutdown of the plant. The PWS does not handle radioactive fluids. It is neither connected to, nor does it interface with any system that may contain radioactive fluids.

Sanitary Waste Discharge System

The SWDS has no safety-related function and is not connected to any safety related system or component. Failure of the system does not compromise any safety-related equipment or component and does not prevent safe shutdown of the plant.

The SWDS is not designed to handle radioactive fluids. It is neither connected to, nor does it interface with, any system that may contain radioactive fluids. SWDS effluent is monitored as described in Table 11.5-201. In the event radioactivity is detected above predetermined limits, controls are in place to prevent offsite disposal of sewage sludge prior to on-site evaluation of potential radiological contamination and treatment when contamination is beyond acceptable limits.

9.2.4.4 Testing and Inspection Requirements

The PWS and SWDS are proven operable by their use during normal plant operation.

9.2.4.5 Instrumentation Application

The PWS and SWDS are furnished with instrumentation that permit local and/or remote monitoring and control of each of the respective processes. This instrumentation includes meters, switches, indicators, pressure gauges, flow switches, transmitters, controllers, and valves as required for service, operation, and protection of plant personnel and equipment.

9.2.5 Ultimate Heat Sink

This section of the referenced DCD is incorporated by reference with the following departures and/or supplements.

Replace the second to last sentence in the seventh paragraph with the following.

STD COL 9.2.5-1-A **[START COM 9.2-001]** Procedures that identify and prioritize available makeup sources seven days after an accident, and provide instructions for establishing necessary connections, will be developed in accordance with the procedure development milestone in Section 13.5. **[END COM 9.2-001]**

9.2.5.1 COL Information

9.2.5-1-A **Post Seven day Makeup to UHS**

STD COL 9.2.5-1-A This COL item is addressed in Subsection 9.2.5.

9.2.6 Condensate Storage and Transfer System

This section of the referenced DCD is incorporated by reference with the following departures and/or supplements.

9.2.6.2 System Description

Add the following at the end of the first paragraph.

STD SUP 9.2.6-1 Freeze protection is provided for the CS&TS.

9.2.7 Chilled Water System

This section of the referenced DCD is incorporated by reference with no departures or supplements.

9.2.8 Turbine Component Cooling Water System

This section of the referenced DCD is incorporated by reference with no departures or supplements.

9.2.9 Hot Water System

This section of the referenced DCD is incorporated by reference with no departures or supplements.

9.2.10 Station Water System

This section of the referenced DCD is incorporated by reference with the following departures and/or supplements.

9.2.10.2 System Description

Replace the Detailed System Description portion of this section with the following.

EF3 CDI

Detailed System Description

The SWS consists of the following subsystems:

- Plant Cooling Tower Makeup System (PCTMS)
- Pretreated Water Supply System (PWSS)

The PCTMS provides makeup water to the cooling tower basins for both the PSWS (Subsection 9.2.1) and CIRC (Section 10.4). The supply of water makes up for losses resulting from evaporation, drift and blowdown from the cooling towers. In addition, the PCTMS provides makeup water to replace water used for strainer backwashes. The PCTMS consists of a water source, pumps, strainers, connecting piping, valves and

instrumentation. See Figure 9.2-203 for a simplified system diagram and Table 9.2-204 for component design parameters for the PCTMS.

The PWSS supplies water to the Fire Protection System (FPS) (Subsection 9.5.1) for filling the primary firewater tanks. In addition, the PWSS provides PSWS cooling tower makeup as an alternate to the PCTMS. The PWSS also provides water for the strainers. The PWSS consists of a water source, pumps, strainers, station water storage tank (SWST), connecting piping, valves and instrumentation. See Figure 9.2-204 for a simplified diagram and Table 9.2-205 for component parameters for the PWSS.

Table 9.2-201 PSWS Component Design Characteristics [EF3 COL 9.2.1-1-A]

	PSWS Pumps	
	Type	Vertical, wet-pit, centrifugal turbine
	Quantity	4
	Capacity Each	1.262 m^3/s (20,000 gpm)
	Plant Service Water System[1]	
EF3 CDI	Flow (AHS or NPHS)	2.524 m^3/s (40,000 gpm)
	PSWS Mechanical-Draft Cooling Towers	
EF3 CDI	Type	Mechanical draft, multi-cell, redundant adjustable speed, reversible fans, plume abated
	Quantity	2
	Heat Load Each[2]	83.5 MW (2.85 x 10^8 BTU/hr)
	Flow Rate (Water) Each	2.524 m^3/s (40,000 gpm)
EF3 CDI	Ambient Wet Bulb Temperature[3]	22.8°C (73°F)
	Approach Temperature	8.3°C (15°F)
	Cold Leg Temperature	31.1°C (88°F)
EF3 SUP 9.2.1-1	Basin Reserve Storage Capacity[1]	2.4 million gallons
	Strainers	
	Type	Automatic cleaning, basket
	Quantity	4

1. PSWS required to remove 2.02 x 10^7 MJ (1.92 x 10^{10} BTU) for period of 7 days without active makeup.
2. Cooling tower sizing capacity including margin over system design heat loads as defined in DCD Table 9.2-1.
3. Ambient wet bulb temperature includes a 0.5°C (1°F) recirculation allowance.

Table 9.2-202 Major Makeup Water System Components [EF3 CDI]

Two activated carbon filter feed pumps

One activated carbon filter unit consisting of multiple modules

Four 5 micron cartridge filters

Two first pass reverse osmosis (RO) high-pressure pumps

Two second pass RO booster pumps

Two second pass RO high-pressure pumps

One RO system consisting of multiple modules

One RO break tank

One chemical treatment system that provides chemical conditioning for the RO system

One chemical cleaning system for the RO membranes

Table 9.2-203 Potable Water System Component Design Characteristics [EF3 CDI]

Potable Water Pumps	
Quantity	2
Capacity Each	45.4 m^3/hr (200 gpm)
Potable Water Jockey Pump	
Quantity	1
Capacity	2.3 m^3/hr (10 gpm)
Potable Water Storage Tank	
Quantity	1
Capacity	75.7 m^3 (20,000 gal)
Hot Water Tank	
Quantity	1
Type	Electric Immersion Heater or On-demand in-line heaters

Table 9.2-204 Station Water System – Plant Cooling Tower Makeup System Component Design Parameters [EF3 CDI]

Pumps	
Type	Vertical, wet pit, centrifugal type
Quantity	3 x 50%
Capacity each	Approximately 4,088 m^3/hr (18,000 gpm)
Strainers	
Type	Duplex, basket
Quantity	6

Table 9.2-205 Station Water System – Pretreated Water Supply System Component Design Parameters [EF3 CDI]

PWSS Pumps	
Type	Vertical, wet pit, centrifugal type
Quantity	2 x 100%
Capacity each	Approximately 272 m^3/hr (1200 gpm)
Strainers	
Type	Duplex, basket
Quantity	2

Figure 9.2-201 Potable Water System Simplified Diagram [EF3 CDI]

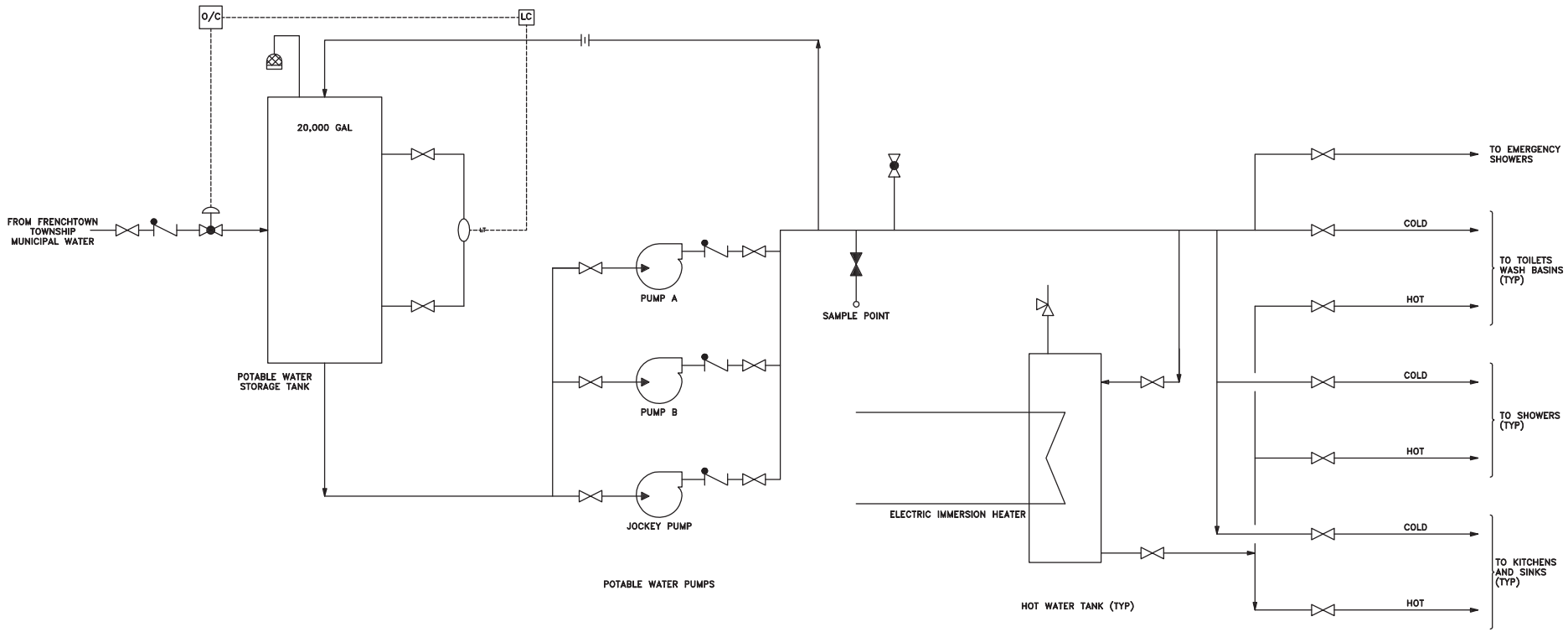

Figure 9.2-202 Sanitary Waste Discharge System Simplified Diagram [EF3 CDI]

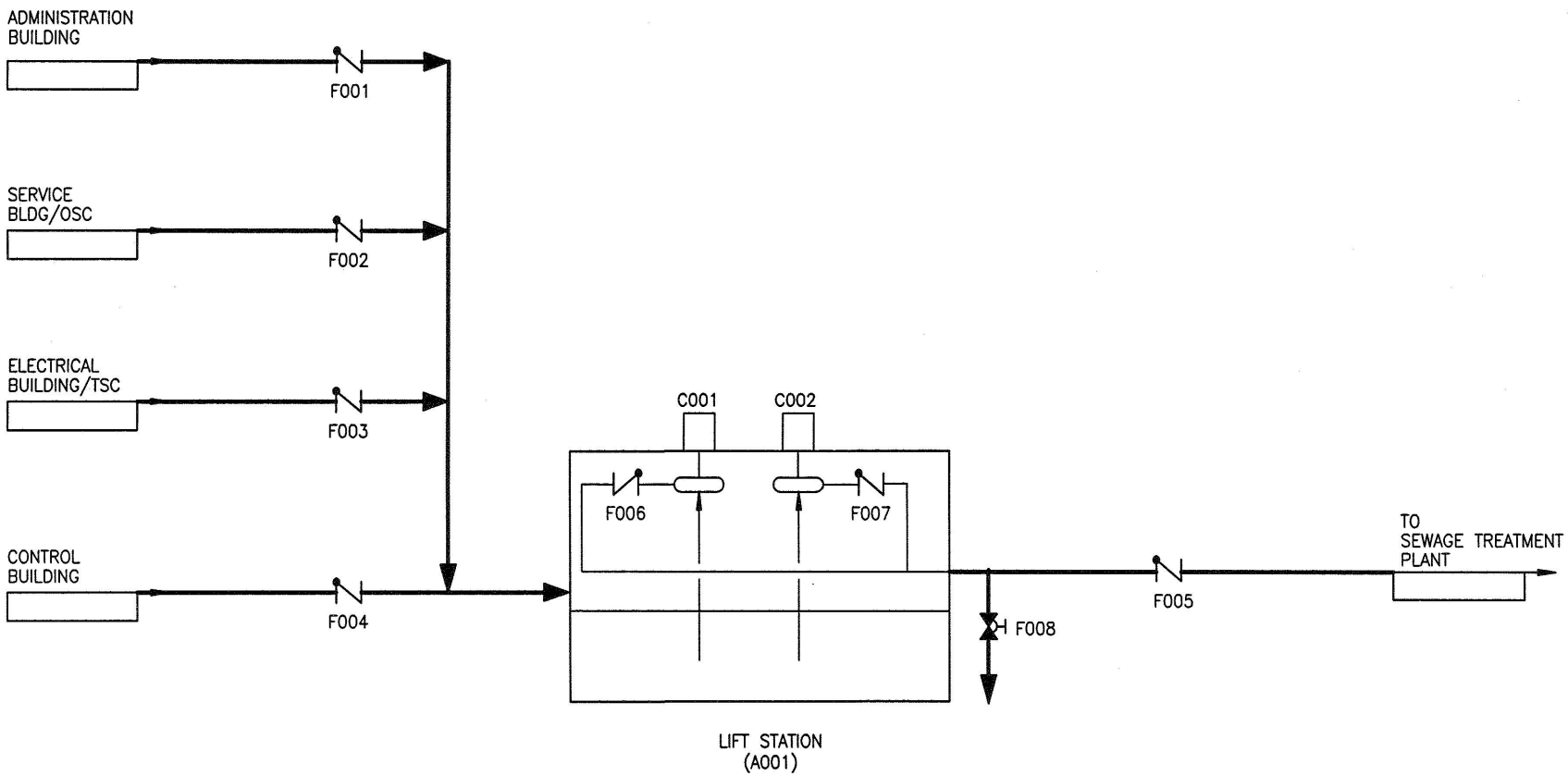

Figure 9.2-203 Station Water System – Plant Cooling Tower Makeup System (PCTMS) [EF3 CDI]

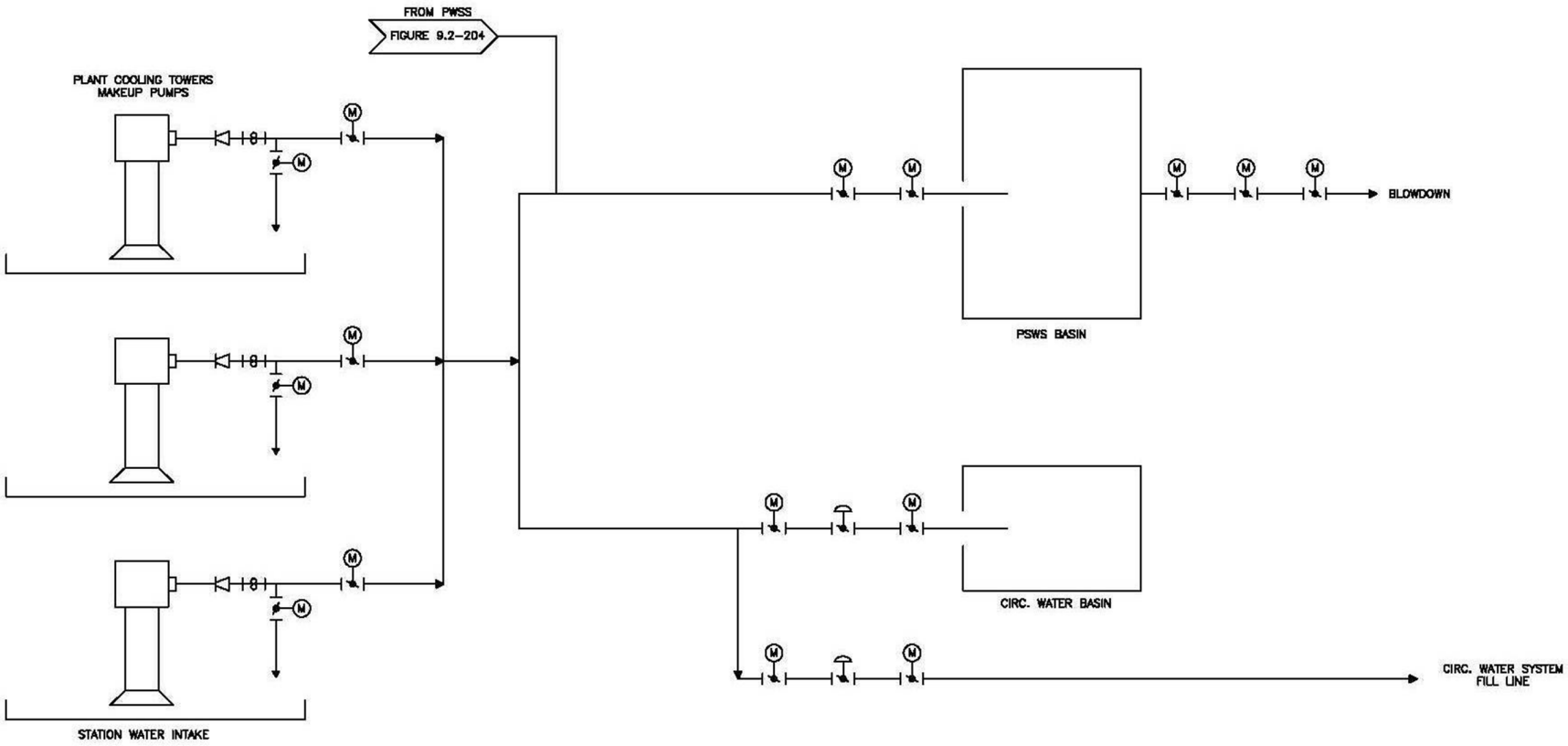

Figure 9.2-204 Station Water System – Pretreated Water Supply System (PWSS) [EF3 CDI]

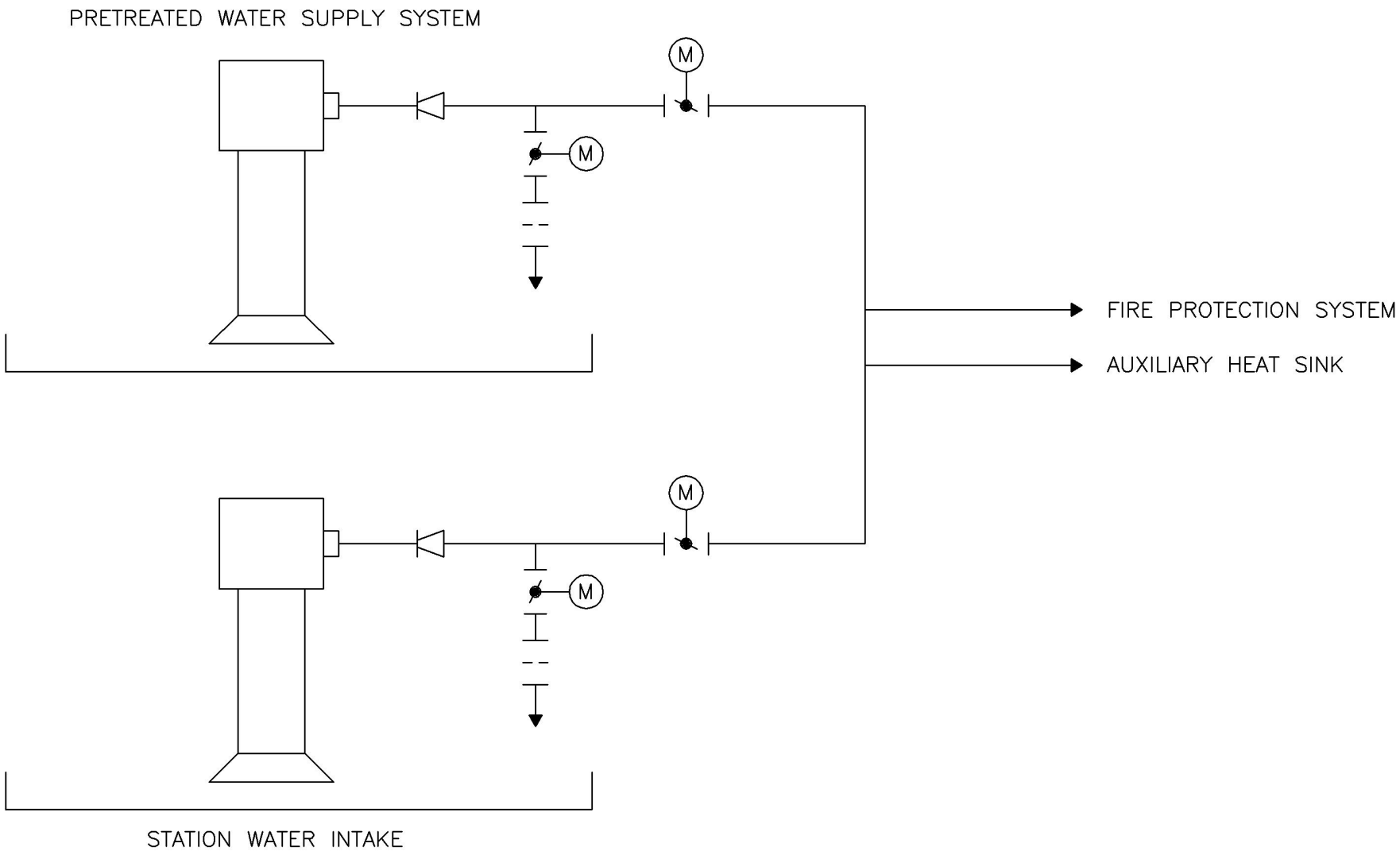

Figure 9.2-205 Plant Service Water System Simplified Diagram

[EF3 CDI]

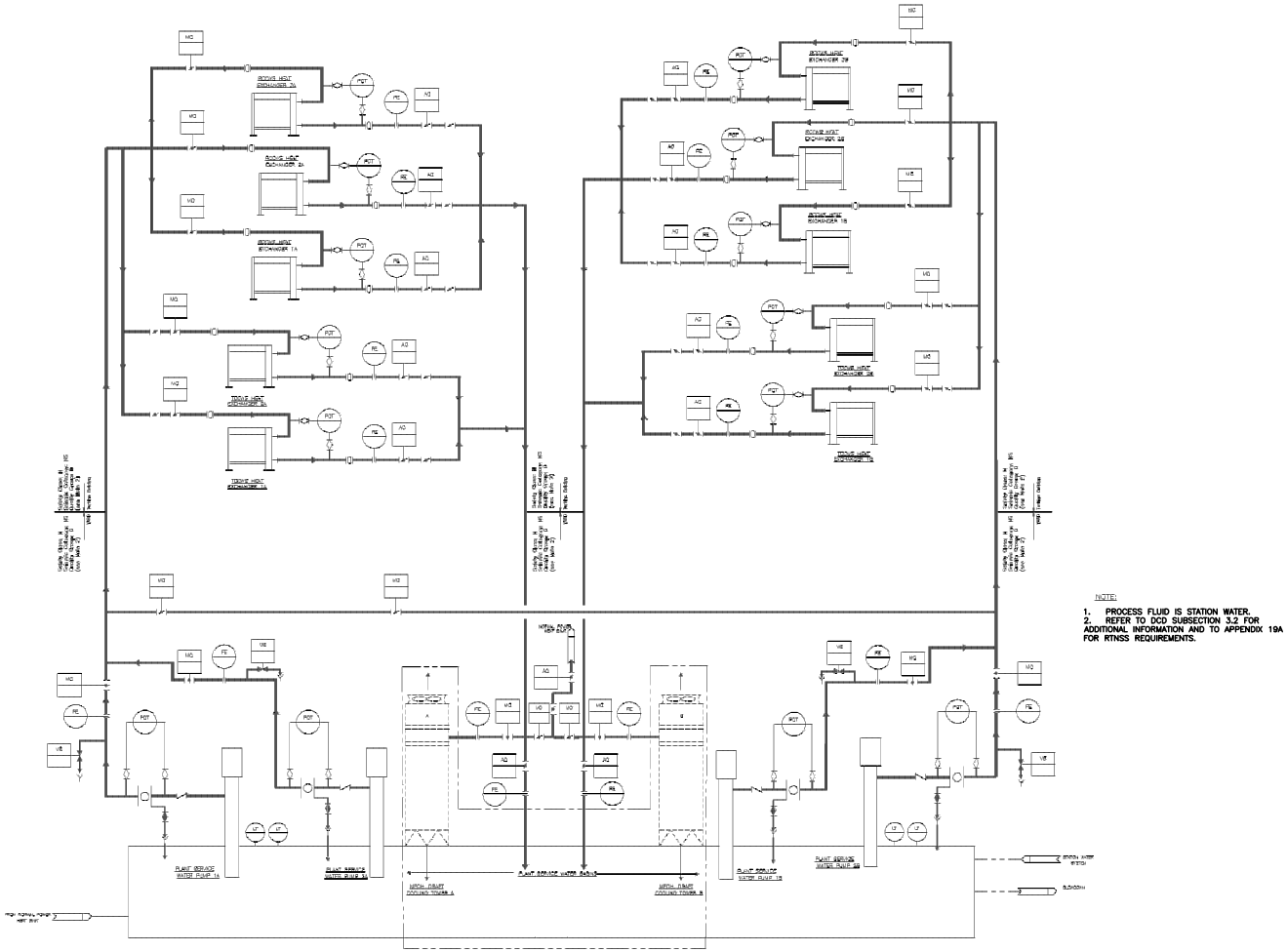

9.3 Process Auxiliaries

9.3.1 Compressed Air Systems

This section of the referenced DCD is incorporated by reference with no departures or supplements.

9.3.2 Process Sampling System

This section of the referenced DCD is incorporated by reference with the following departures and/or supplements.

9.3.2.2 System Description

Add the following at the end of this section.

STD COL 9.3.2-1-A **Post-Accident Sampling Program**

The post-accident sampling program consists of the following:

- Emergency Operating Procedures that rely on Emergency Action Levels, defined in the Emergency Plan, are used to classify fuel damage events. These procedures rely on installed post-accident radiation monitoring instrumentation described in DCD Section 7.5 and do not require the capability to obtain and analyze highly radioactive coolant samples although sample analyses may be used for classification as well.
- Plant procedures contain instructions for obtaining highly radioactive grab samples from the following:

  Reactor Coolant - from the RWCU/SDC sample line using the Reactor Building Sample Station. These samples can be analyzed for the parameters indicated in DCD Table 9.3-1. If coolant activity is greater than 1.0 Ci/ml, handling of the samples is delayed to avoid overexposure of personnel.

  Suppression Pool - from FAPCS sample line at the Reactor Building Sample Station. These samples can be analyzed for the parameters indicated in DCD Table 9.3-1. If coolant activity is greater than 1.0 Ci/ml, handling of the samples is delayed to avoid overexposure of personnel.

  Containment Atmosphere - may be taken as described in DCD Section 11.5.3.2.11 and analyzed for fission products.

- DCD Section 7.5.2.2 describes Containment Monitoring System operation in post-LOCA mode for gaseous sampling for O_2 and H_2.
- Effluent radiation monitoring is described in DCD Section 7.5. Field sampling and monitoring capability is maintained in accordance with the Emergency Plan.
- Post accident monitoring is adequate to implement the Emergency Plan without reliance on post accident sampling capability; therefore, the absence of a dedicated Post-Accident Sampling System does not reduce the effectiveness of the Emergency Plan.
- The post-accident sampling program meets the requirements of NUREG-0800, Section 9.3.2 for actions required in lieu of a Post Accident Sampling System.

9.3.2.6 COL Information

9.3.2-1-A Post-Accident Sampling Program

STD COL 9.3.2-1-A This COL item is addressed in Subsection 9.3.2.2.

9.3.3 Equipment and Floor Drain System

This section of the referenced DCD is incorporated by reference with no departures or supplements.

9.3.4 Chemical and Volume Control System

This section of the referenced DCD is incorporated by reference with no departures or supplements.

9.3.5 Standby Liquid Control System

This section of the referenced DCD is incorporated by reference with the following departures and/or supplements.

9.3.5.2 System Description

Detailed System Description

Add the following to the end of the fifth paragraph.

STD SUP 9.3.5-1 The above provisions adequately prevent loss of solubility of borated solutions (sodium pentaborate).

9.3.6 Instrument Air System

This section of the referenced DCD is incorporated by reference with no departures or supplements.

9.3.7 Service Air System

This section of the referenced DCD is incorporated by reference with no departures or supplements.

9.3.8 High Pressure Nitrogen Supply System

This section of the referenced DCD is incorporated by reference with no departures or supplements.

9.3.9 Hydrogen Water Chemistry System

This section of the referenced DCD is incorporated by reference with the following departures and/or supplements.

Replace the first paragraph with the following.

STD COL 9.3.9-1-A

The site specific design includes HWCS.

9.3.9.1 Design Basis

Power Generation Design Basis

Replace the first sentence with the following.

STD CDI

Hydrogen is added into the feedwater at the suction of the feedwater pumps and oxygen into the offgas system.

9.3.9.2 System Description

Replace this section with the following.

EF3 CDI

The HWCS, illustrated in DCD Figure 9.3-5, is composed of hydrogen and oxygen supply systems to inject hydrogen in the feedwater and oxygen in the offgas and several monitoring systems to track the effectiveness of the HWCS. Storage requirements are based on the HWC system usage, ESBWR generator usage and estimated losses.

The hydrogen supply system is integrated with the generator hydrogen supply system (as described in DCD Section 10.2.2.2.8).

EF3 CDI
EF3 COL 9.3.9-2-A

9.3.9.2.1 Hydrogen Storage Facility

The bulk hydrogen storage facility stores liquid hydrogen in an 68 cubic meter (18,000 gal) vacuum-jacketed pressure vessel. The storage facility is located within a fenced area outside the plant protected area and is open to prevent the accumulation of hydrogen and meets the requirements of DCD References 9.3.9-1 and 9.3.9-2. The hydrogen storage facility consists of a cryogenic tank, cryogenic pumps, atmospheric vaporizers, a compressor, a high-pressure gas storage tubes bank, a hydrogen supply line, pressure regulating valves, an excess flow check valve, and relief valves. The cryogenic tank meets ASME Section VIII, Division 1, requirements for unfired pressure vessels. The pressure regulating valves limit the supply pressure of hydrogen; a relief valve is provided downstream of the regulating valve station to protect the downstream piping in case of regulating valve failure. The excess flow check valve ensures that a large release is limited to the storage facility location. The relief valves provide protection for the storage tank and each isolable liquid hydrogen filled piping section.

The HWCS is implemented with On-line Noble Chem™. Plant personnel conduct the OLNC process while the plant is operating.

The Oxygen Storage Facility is described in Subsection 9.3.10.2.

9.3.9.4 Inspection and Testing Requirements

Replace this section with the following.

STD CDI

The connections for the HWCS are tested and inspected with the feedwater and offgas piping.

Major components of the HWCS are tested and inspected as separate components prior to installation. The system is tested in accordance with vendor requirements after installation to ensure proper performance.

9.3.9.5 Instrumentation and Controls

Replace the first sentence with the following.

STD CDI

Instrumentation is provided to control the injection of hydrogen and augment the injection of oxygen.

9.3.9.6 COL Information

9.3.9-1-A Implementation of Hydrogen Water Chemistry

STD COL 9.3.9-1-A

This COL item is addressed in Subsection 9.3.9.

9.3.9-2-A Hydrogen and Oxygen Storage and Supply

EF3 COL 9.3.9-2-A

This COL item is addressed in Subsection 9.3.9.2.1.

9.3.10 Oxygen Injection System

This section of the referenced DCD is incorporated by reference with the following departures and/or supplements.

9.3.10.2 System Description

Replace the last paragraph with the following.

EF3 COL 9.3.10-1-A

The bulk oxygen storage facility is located outside the plant fenced area. The facility consists of a 34 cubic meter (9,000 gal) cryogenic tank, atmospheric vaporizers, an oxygen supply line, a pressure regulating valve, an excess flow check valve, and relief valves. The pressure regulating valve limits the oxygen supply pressure. The excess flow check valve ensures that large releases are limited to the storage facility. The redundant relief valves provide protection for the storage tank and each isolable liquid oxygen filled piping section. The piping carrying gaseous oxygen from the storage facility to the turbine building is routed underground. The storage tank meets ASME Code Section VIII, Division 1, requirements for unfired pressure vessels, and DCD References 9.3.9-1 and 9.3.9-2.

9.3.10.6 COL Information

9.3.10-1-A Oxygen Storage Facility

EF3 COL 9.3.10-1-A

This COL item is addressed in Subsection 9.3.10.2.

9.3.11 Zinc Injection System

This section of the referenced DCD is incorporated by reference with the following departures and/or supplements.

9.3.11.2 System Description

Replace the second paragraph with the following.

STD COL 9.3.11-1-A A Zinc Injection System is not utilized.

9.3.11.4 Test and Inspections

Replace the second paragraph with the following.

STD COL 9.3.11-2-A A Zinc Injection System is not utilized.

9.3.11.6 COL Information

9.3.11-1-A **Determine Need for Zinc Injection System**

STD COL 9.3.11-1-A This COL item is addressed in Subsection 9.3.11.2.

9.3.11-2-A **Provide System Description for Zinc Injection System**

STD COL 9.3.11-2-A This COL item is addressed in Subsection 9.3.11.4.

9.3.12 Auxiliary Boiler System

This section of the referenced DCD is incorporated by reference with no departures or supplements.

9.4 Heating, Ventilation, and Air Conditioning

This section of the referenced DCD is incorporated by reference with the following departures and/or supplements.

9.4.3.1 Design Basis

RWGAVS

Add the following new bullet at the end of the first paragraph.

EF3 DEP 11.4-1

- The RWGAVS provides the capability to exhaust air from the Class A, B and C storage areas. This includes the ventilation of the area to prevent the buildup of hydrogen or biogas that may be generated in and vented from the stored Class B and C high integrity containers. This area will be equipped with hydrogen/explosive gas detectors.

9.5 Other Auxiliary Systems

9.5.1 Fire Protection System

This section of the referenced DCD is incorporated by reference with the following departures and/or supplements.

9.5.1.1 Design Bases

Codes, Standards, and Regulatory Guidance

Add the following at the end of this section.

EF3 SUP 9.5.1-1

Table 9.5-201 supplements DCD Table 9.5-1 for those portions outside the DCD and operational aspects of the fire detection and suppression systems.

9.5.1.2 System Description

Add the following after the first sentence in the first paragraph.

EF3 COL 9.5.1-4-A

Figure 9.5-201 and DCD Table 9.5-1 provide simplified diagrams of the site-specific firewater supply piping.

9.5.1.4 Fire Protection Water Supply System

Water Sources

Replace the first paragraph with the following.

EF3 COL 9.5.1-4-A

Water for the Fire Protection System is supplied from a minimum of two sources: i) at least one “primary” source to the suctions of primary fire pumps and corresponding jockey fire pump and, ii) at least one “secondary” source to suctions of secondary fire pumps and corresponding jockey fire pump. The primary source is two dedicated,

Seismic Category I, firewater storage tanks. Each primary firewater storage tank has sufficient capacity to meet the maximum firewater demand of the system for a period of 120 minutes.

EF3 COL 9.5.1-1-A The secondary firewater source is Lake Erie. This large body of water has a capacity well in excess of the 2082m^3 (550,000 gal) required by NFPA 804.

The water from Lake Erie is treated with sodium hypochlorite.

Primary Firewater Source

The Pretreated Water Supply System (PWSS) provides treated and filtered water to the firewater storage tanks. PWSS pumps are located in the StationWater Intake Building. Hypochlorite is added to lake water in the StationWater Intake Building intake bay to preclude biofouling or microbiologically induced corrosion. Strainers are installed at the discharge of the PWSS pumps to preclude large-size foreign materials. The water is also preconditioned to facilitate filtering through multimedia filters before being stored in the station water storage tank and supplied to the firewater storage tanks.

Secondary Firewater Source

The secondary fire pumps are also located in the Station Water Intake Building and draw water from the intake bay. Hypochlorite is added to lake water in the Station Water Intake Building intake bay to preclude biofouling or microbiologically induced corrosion. Hypochlorite can be injected at the discharge of the secondary fire pumps, if required. Strainers are installed at the discharge of secondary firewater pumps to preclude large-size foreign materials. Filtering is not required because of the small amount of total suspended solids in the lake water. Sampling and monitoring is performed, as required, to ensure an acceptable level of quality of firewater. Periodic system flushes and flow tests are performed to maintain and verify firewater supply system capability.

Water sources that are used for multiple purposes ensure that the required quantity of firewater is dedicated for fire protection use only.

Fire Pumps

Replace the sixth sentence in the first paragraph with the following.

STD COL 9.5.1-2-A **[START COM 9.5-001]** Testing will be performed to demonstrate that the secondary fire protection pump circuit supplies a minimum of 484 m^3/hr (2130 gpm) with sufficient discharge pressure to develop a minimum of 738 kPaG (107 psig) line pressure at the Turbine Building/yard interface boundary. This cannot be performed until the system is built. This activity will be completed prior to fuel receipt. **[END COM 9.5-001]**

9.5.1.5 Firewater Supply Piping, Yard Piping, and Yard Hydrants

Delete the last paragraph, and add the following at the end of the first paragraph.

EF3 COL 9.5.1-4-A Figure 9.5-201 and DCD Table 9.5-1 provide simplified diagrams of the site-specific firewater supply piping.

9.5.1.10 Fire Barriers

Replace the last paragraph with the following.

STD COL 9.5.1-5-A **[START COM 9.5-002]** Mechanical and electrical penetration seals and electrical raceway fire barrier systems are qualified to the requirements delineated in RG 1.189 by a recognized laboratory in accordance with the applicable guidance of NFPA 251 and/or ASTM E-119. Detailed design in this area is not complete. Specific design and certification test results for penetration seal designs and electrical raceway fire barrier systems will be available for review at least six months prior to fuel receipt. **[END COM 9.5-002]**

9.5.1.11 Building Ventilation

Replace the last sentence in the third paragraph with the following.

STD COL 9.5.1-6-A **[START COM 9.5-003]** Procedures for manual smoke control will be developed as part of the Fire Protection Program implementation. **[END COM 9.5-003]** The required elements of the Fire Protection Program are fully operational prior to receipt of new fuel for buildings storing new fuel and adjacent fire areas that could affect the fuel storage area. Other required elements of the Fire Protection Program described in this section are fully operational prior to initial fuel loading per Section 13.4.

9.5.1.12 Safety Evaluation

Replace the first sentence of the fifth paragraph with the following.

STD COL 9.5.1-7-A

[START COM 9.5-004] A compliance review of the final as-built design against the assumptions and requirements stated in the FHA will be completed prior to fuel load. **[END COM 9.5-004]** Based on this review, the FHA will be updated as necessary.

9.5.1.15 Fire Protection Program

Replace the last sentence of the first paragraph with the following.

STD COL 9.5.1-8-A

The elements of the Fire Protection Program necessary to support receipt and storage of fuel onsite for buildings storing new fuel and adjacent fire areas that could affect the fuel storage area are fully operational prior to receipt for new fuel. Other required elements of the Fire Protection Program described in this section are fully operational prior to initial fuel loading per Section 13.4.

9.5.1.15.1 Fire Protection Program Criteria

Add the following at the end of this section.

EF3 SUP 9.5.1-1

Table 9.5-201 supplements DCD Table 9.5-1.

9.5.1.15.2 Organization and Responsibilities

Replace the first paragraph with the following.

STD COL 13.4-1-A

A description of the Fire Protection Program is provided in Subsection 9.5.1.15 and DCD Section 9.5.1.15.

9.5.1.15.3 Fire Protection Program Staffing Requirements

Replace this section with the following.

EF3 COL 13.1-1-A

Fire protection staffing and organization of the fire brigade are described in Section 13.1.

9.5.1.15.4 Onsite Fire Operations Training

Replace the first paragraph with the following.

EF3 COL 9.5.1-10-A

[START COM 9.5-006] Implementation of the fire brigade will be in accordance with the milestone in Section 13.4 for the Fire Protection Program. **[END COM 9.5-006]**

9.5.1.15.6. Control of Combustible Materials, Hazardous Materials and Ignition Sources

Add the following at the end of this section.

STD SUP 9.5.1-3

- In rooms adjacent to the main control room and in computer rooms that are not part of the control room complex:
  - Transient combustible materials are not left unattended during lunch breaks, shift changes, or other similar periods unless stored in approved containers.
  - Electrical appliances and other potential ignition sources are controlled.
- Prohibit the storage of transient combustibles below the raised floor in the main control complex.
- Prohibit the storage of hazardous chemicals in areas that contain or expose equipment important to safety.

9.5.1.15.9 Quality Assurance

Replace this section with the following.

STD COL 9.5.1-11-A

Quality assurance controls are applied to the activities involved in the design, procurement, installation, and testing and the administrative controls of fire protection systems, in accordance with the measures outlined in Chapter 17.

For the operational fire protection program, the Quality Assurance Program implements the requirements of RG 1.189 through site-specific administrative controls procedures. **[START COM 9.5-007]** The procedures will be developed six months prior to fuel receipt and will be fully implemented prior to fuel receipt. **[END COM 9.5-007]**

9.5.1.16 COL Information

9.5.1-1-A Secondary Firewater Storage Source

EF3 COL 9.5.1-1-A This COL item is addressed in Subsection 9.5.1.4. and DCD Table 9.5-2.

9.5.1-2-A Secondary Firewater Capacity

EF3 COL 9.5.1-2-A This COL item is addressed in Subsection 9.5.1.4.

9.5.1-4-A Piping and Instrument Diagrams

EF3 COL 9.5.1-4-A This COL item is addressed in Subsection 9.5.1.2, 9.5.1.4, 9.5.1.5, and Figure 9.5-201.

9.5.1-5-A Fire Barriers

STD COL 9.5.1-5-A This COL item is addressed in Subsection 9.5.1.10.

9.5.1-6-A Smoke Control

STD COL 9.5.1-6-A This COL item is addressed in Subsection 9.5.1.11.

9.5.1-7-A FHA Compliance Review

STD COL 9.5.1-7-A This COL item is addressed in Subsection 9.5.1.12.

9.5.1-8-A FP Program Description

STD COL 9.5.1-8-A This COL item is addressed in Subsection 9.5.1.15.

9.5.1-9-A [Deleted]

9.5.1-10-A Fire Brigade

EF3 COL 9.5.1-10-A This COL item is addressed in 9.5.1.15.4 and 13.1.2.1.5.

9.5.1-11-A Quality Assurance

STD COL 9.5.1-11-A This COL item is addressed in 9.5.1.15.9.

DCD Table 9.5-2

EF3 COL 9.5.1-1-A Delete the “*” and “**” footnotes.

9.5.2 Communications System

This section of the referenced DCD is incorporated by reference with the following departures and/or supplements.

9.5.2.2 System Description

Emergency Communication Systems

Replace the paranthetical “(COL 9.5.2.5-1-A)” in the first bullet with the following.

EF3 COL 9.5.2.5-1-A

Fermi 3 has various communication systems available to communicate with offsite authorities. The primary system for emergency communication is the Emergency Notification System (ENS) which is accessible in the Control Room by a dedicated phone instrument and also by an ENS selection button on the Radiological Emergency Response Preparedness (RERP) phone instrument.

The Emergency Notification System (ENS) is a dedicated NRC FTS-2001 System that is normally used only for plant communication with the NRC. This system is independent from other site telephone systems. Electrical power for this phone system is provided by two redundant AC power sources. In addition, there are batteries, which would automatically supply power to these phones if a complete loss of AC power (to the phones) occurred. These batteries have an 8 hour capacity rating. This design ensures that the ENS located at the site is fully operable from the site in the event of a loss of offsite power at the site and is in compliance with the requirements of NRC Bulletin 80-15 for the ENS.

As a part of the overall Fermi 3 Emergency Plan, the ENS provides a means for initial notifications, as well as ongoing communications about plant systems, status and parameters, to the NRC. There is no specific back-up system to the ENS. In the event the ENS is unavailable, notifications can be made through a number of alternate methods. These include the RERP phone system which, like the ENS is a battery backed dedicated phone system; the AT&T phone system which is intended to provide communication with local and state authorities; the commercial phone system; or utilizing 800 MHz band radio communications with the local law enforcement agencies. Any of these alternatives will suffice to provide the necessary notifications.

Replace the parenthetical “(COL 9.5.2.5-3-A)” in the second bullet with the following.

EF3 COL 9.5.2.5-3-A The health physics network is described in the Emergency Plan.

Replace the parenthetical "(COL 9.5.2.5-4-A)" in the third bullet with the following.

EF3 COL 9.5.2.5-4-A Communication from the Control Room, TSC, and EOF to NRC headquarters including establishment of Emergency Response Data Systems (ERDS) is described in the Emergency Plan.

Replace the parenthetical "(COL 9.5.2.5-3-A)" in the fourth bullet with the following.

EF3 COL 9.5.2.5-3-A The crisis management radio system is part of the plant radio system described in DCD Section 9.5.2.2.

Replace the parenthetical "(COL 9.5.2.5-5-A)" in the fifth bullet with the following.

EF3 COL 9.5.2.5-5-A Compliance of the Fire Brigade Radio System with RG 1.189, Position 4.1.7, is described in DCD Section 9.5.2.2.

Replace the last bullet with the following.

EF3 COL 9.5.2.5-2-A

- Transmission System Operator Communications Link: Voice communications with the grid operator are provided via a Company-owned and -maintained transmission system that allows communications with the entire Corporate System. Access to this mode of transmission is made via the plant telephone system. A dedicated line is provided between the Control Room and the power system operator.

9.5.2.5 COL Information

9.5.2.5-1-A Emergency Notification System

EF3 COL 9.5.2.5-1-A This COL item is addressed in Subsection 9.5.2.2.

9.5.2.5-2-A Grid Transmission Operator

EF3 COL 9.5.2.5-2-A This COL item is addressed in Subsection 9.5.2.2. and Emergency Plan Section II.F.1.

9.5.2.5-3-A **Offsite Interfaces (1)**

EF3 COL 9.5.2.5-3-A This COL item is addressed in Subsection 9.5.2.2 and Emergency Plan Sections II.E.1 and II.F.1.

9.5.2.5-4-A **Offsite Interfaces (2)**

EF3 COL 9.5.2.5-4-A This COL item is addressed in Subsection 9.5.2.2 and Emergency Plan Sections II.E.1 and II.F.1.

9.5.2.5-5-A **Fire Brigade Radio System**

EF3 COL 9.5.2.5-5-A This COL item is addressed in Subsection 9.5.2.2.

9.5.3 **Lighting System**

This section of the referenced DCD is incorporated by reference with no departures or supplements.

9.5.4 **Diesel Generator Fuel Oil Storage and Transfer System**

This section of the referenced DCD is incorporated by reference with the following departures and/or supplements.

9.5.4.2 **System Description**

Detailed System Description

Standby Diesel Generators

Replace the third to last sentence in the first paragraph with the following.

STD COL 9.5.4-1-A Procedures require that the quantity of diesel fuel oil in the standby diesel generator (SDG) fuel oil storage tanks is monitored on a periodic basis. The diesel fuel oil usage is tracked against planned deliveries. Regular transport replenishes the diesel fuel oil inventory during periods of high demand and ensures continued supply in the event of adverse weather conditions. These procedures ensure sufficient diesel fuel oil inventory is available on site so that the SDGs can operate continually for seven days with each operating at its calculated design load, with appropriate design margins. The procedures will be developed in accordance with the milestone and processes described in Section 13.5.

Replace the third paragraph with the following.

EF3 COL 9.5.4-2-A The only underground component of the SDGs fuel oil storage and transfer system is carbon steel piping. A corrosion protection system consistent with the guidance contained in ASME B31.1, Power Piping Code, Nonmandatory Appendix IV, Corrosion Control for ASME B31.1 Power Piping Systems, and American Petroleum Institute (API) Recommended Practice 1632, Cathodic Protection of Underground Petroleum Storage Tanks and Piping Systems is provided for external surfaces of buried piping systems. The buried sections of the piping are provided with waterproof protective coating and an impressed current type cathodic protection to control external corrosion.

STD COL 9.5.4-1-A Delete the parenthetical "(COL 9.5.4-1-A)" at the end of the last paragraph.

Ancillary Diesel Generators

Replace the third to last sentence in the first paragraph with the following.

STD COL 9.5.4-1-A Procedures require that the quantity of diesel fuel in the ancillary diesel generator (ADG) fuel oil storage tanks is monitored on a periodic basis. The diesel fuel oil usage is tracked against planned deliveries. Regular transport replenishes the fuel oil inventory during periods of high demand and ensures continued supply in the event of adverse weather conditions. These procedures ensure sufficient diesel fuel oil inventory is available on site so that the ADGs can operate continually for seven days its calculated design load, with appropriate design margins. The procedures will be developed in accordance with the milestone and processes described in Section 13.5.

Replace the third paragraph with the following.

EF3 COL 9.5.4-2-A The only underground component of the ADGs fuel oil storage and transfer system is carbon steel piping. A corrosion protection system consistent with the guidance contained in ASME B31.1, Power Piping Code, Nonmandatory Appendix IV, Corrosion Control for ASME B31.1 Power Piping Systems, and American Petroleum Institute (API) Recommended Practice 1632, Cathodic Protection of Underground Petroleum Storage Tanks and Piping Systems is provided for external

surfaces of buried piping systems. The buried sections of the piping are provided with waterproof protective coating and an impressed current type cathodic protection to control external corrosion.

System Operation

Standby Diesel Generators

STD COL 9.5.4-1-A Delete the parenthetical "(COL 9.5.4-1-A)" at the end of the paragraph.

Ancillary Diesel Generators

STD COL 9.5.4-1-A Delete the parenthetical "(COL 9.5.4-1-A)" at the end of the paragraph.

9.5.4.6 COL Information

9.5.4-1-A Fuel Oil Capacity

STD COL 9.5.4-1-A This COL item is addressed in Subsection 9.5.4.2.

9.5.4-2-A Protection of Underground Portion

EF3 COL 9.5.4-2-A This COL item is addressed in Subsection 9.5.4.2.

9.5.5 Diesel Generator Jacket Cooling Water System

This section of the referenced DCD is incorporated by reference with no departures or supplements.

9.5.6 Diesel Generator Starting Air System

This section of the referenced DCD is incorporated by reference with no departures or supplements.

9.5.7 Diesel Generator Lubrication System

This section of the referenced DCD is incorporated by reference with no departures or supplements.

9.5.8 Diesel Generator Combustion Air Intake and Exhaust System

This section of the referenced DCD is incorporated by reference with no departures or supplements.

Table 9.5-201 Codes and Standards [EF3 SUP9.5.1-1] [EF3 SUP 9A-01]

American Society of Mechanical Engineers (ASME)	
Boiler and Pressure Vessel Code	Section IX, Qualification Standard for Welding and Brazing Procedures, Welder, Brazers and Welding and Brazing Operators
Applicable Building Codes	
Michigan Building Code	Michigan Building Code
National Fire Protection Association (NFPA)	
NFPA 1	Uniform Fire Code
NFPA 25	Recommended Practices for Inspection, Testing, and Maintenance of Standpipes and Hose Systems
NFPA 55	Standard for Storage, Use, and Handling of Compressed Gases and Cryogenic Fluids in Portable and Stationary Containers, Cylinders, and Tanks
NFPA 259	Standard Test Method for Potential Heat of Building Materials
NFPA 703	Standard for Fire-Retardant Treated Wood and Fire Retardant Coatings for Building Materials
NFPA 750	Standard for Water Mist Fire Protection Systems
NFPA 1144	Standard for Reducing Structure Ignition Hazards from Wildland Fire
NFPA 1410	Standard on Training for Initial Emergency Scene Operations
NFPA 1620	Recommended Practice for Pre-Incident Planning
NFPA 2001	Standard for Clean Agent Fire Extinguishing
Environmental Protection Agency (EPA)	
Environmental Protection Agency (EPA)	EPA Standards of Performance for Stationary Compression Ignition Internal Combustion Engines; Final Rule (40 CFR Parts 60, 85 et al.)
Listing/Approval Agencies	
Nuclear Electric Insurance Limited (NEIL)	

Figure 9.5-201 Fire Protection System Yard Main Loop [EF3 COL 9.5.1-4-A]

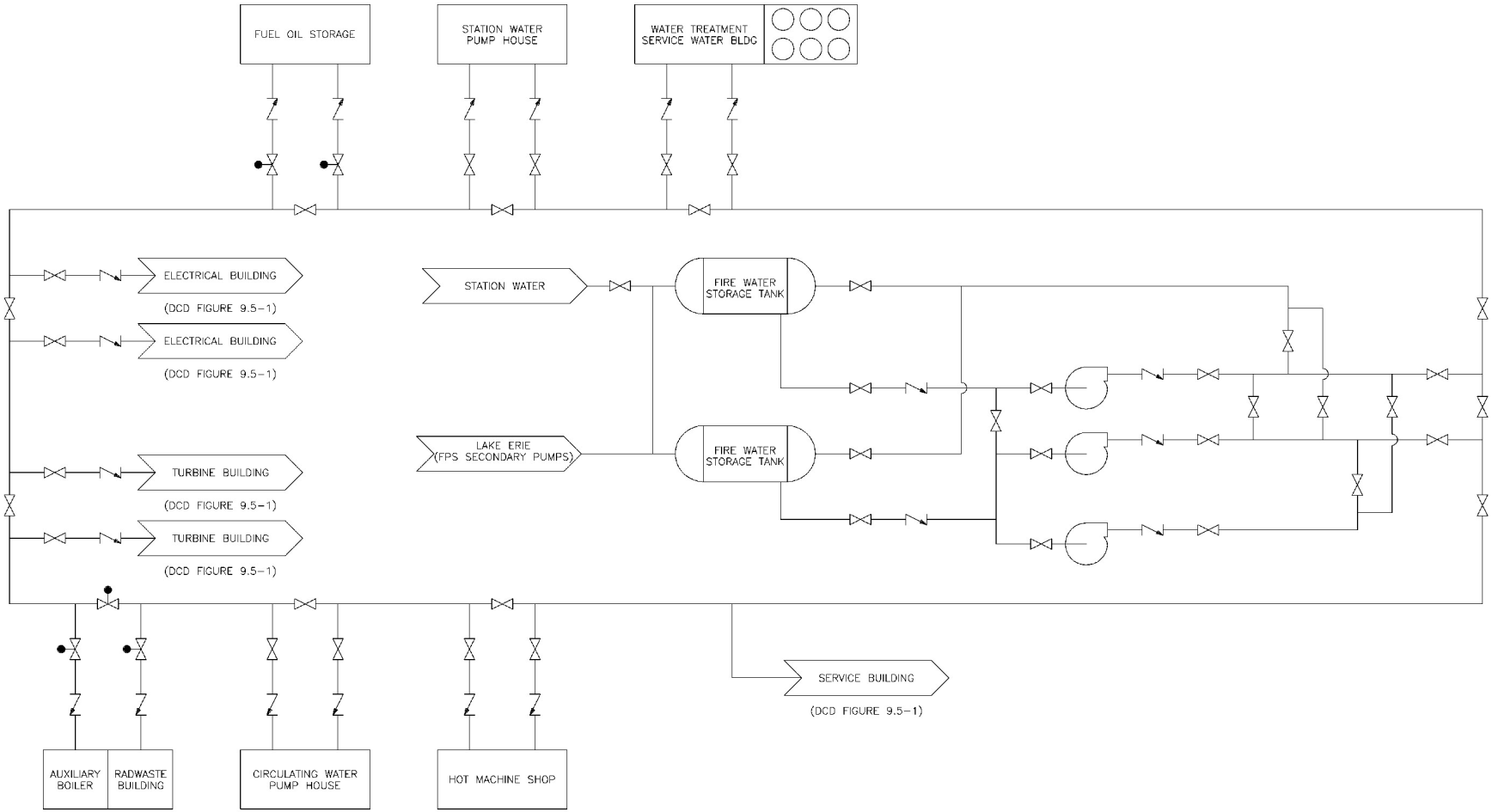

Appendix 9A Fire Hazards Analysis

This section of the referenced DCD is incorporated by reference with the following departures and/or supplements.

9A.2.1 Codes and Standards

Add the following second paragraph.

EF3 SUP 9A-01

The codes and standards that are applicable to the design of the site-specific portions of the yard are listed in Table 9.5-201. Table 1.9-204 identifies the relevant editions for each applicable code and standard. These codes and standards also apply to the operational aspects of the fire detection and suppression systems.

9A.4.7 Yard

Replace the first paragraph with the following.

EF3 COL 9A.7-1-A

The Yard includes all portions of the plant site external to the Reactor Building, Fuel Building, Control Building, Turbine Building, Radwaste Building, and Electrical Building. The fire zone drawings for the site-specific portions of the yard are provided in Figure 9A.2-33R and Figure 9A.2-201.

Replace the last sentence in the third paragraph with the following.

EF3 COL 9A.7-2-A

[START COM 9A-001] A detailed fire hazards analysis of the yard area that is outside the scope of the certified design can not be completed until cable routing is performed during final design. This information will be provided six months prior to fuel load. **[END COM 9A-001]**

The FSAR will be revised to include this information, as appropriate, as part of a subsequent FSAR update.

9A.5.5 Radwaste Building

Replace the section with the following.

EF3 DEP 11.4-1

See Table 9A.5-5R for detailed fire hazards analysis of each fire area within the Radwaste Building.

See Figure 9.A-2-20R through Figure 9.A-2-24R for Radwaste Building fire drawings.

9A.5.7 Yard

Replace the last two sentences with the following.

EF3 COL 9A.7-2-A

[START COM 9A-001] A detailed fire hazards analysis of the yard area that is outside the scope of the certified design can not be completed until cable routing is performed during final design. This information will be provided six months prior to fuel load. **[END COM 9A-001]**

The FSAR will be revised to include this information, as appropriate, as part of a subsequent FSAR update.

9A.5.8 Service Building

Replace the last two sentences with the following.

EF3 COL 9A.7-2-A

[START COM 9A-002] A detailed fire hazards analysis of the yard area that is outside the scope of the certified design, which includes the Service Building, can not be completed until cable routing is performed during final design. This information will be provided six months prior to fuel load. **[END COM 9A-002]**

The FSAR will be revised to include this information, as appropriate, as part of a subsequent FSAR update.

9A.5.9 Service Water/Water Treatment Building

Replace the last two sentences with the following.

EF3 COL 9A.7-2-A

[START COM 9A-003] A detailed fire hazards analysis of the yard area that is outside the scope of the certified design, which includes the

Service Water/Water Treatment Building, can not be completed until cable routing is performed during final design. This information will be provided six months prior to fuel load. **[END COM 9A-003]**

The FSAR will be revised to include this information, as appropriate, as part of a subsequent FSAR update.

9A.7 COL Information

9A.7-1-A Yard Fire Zone Drawings

EF3 COL 9A.7-1-A This COL item is addressed in Subsection 9A.4.7.

9A.7-2-A FHA for Site-Specific Areas

EF3 COL 9A.7-2-A This COL item is addressed in Subsection 9A.4.7, Subsection 9A.5.7, Subsection 9A.5.8, and Subsection 9A.5.9.

Table 9A.5-7 Revisions

EF3 COL 9A.7-2-A Delete Fire Area F4202.

Add Fire Areas F8100 and F8101.

Table 9A.5-5R Radwaste Building (Sheet 1 of 9)

[EF3 DEP 11.4-1]

Fire Area:	**F6101**	Description:	Radwaste Handling Equipment
Building:	**Radwaste**	Applicable codes:	IBC; Reg Guide 1.189; NFPA 10, 13 , 14, 72, 90A , 101, 804

Fire Zone Dwg:

9A.2-20R
9A.2-21R
9A.2-22R
9A.2-23R
9A.2-24R

Building code occupancy clasification:	F-1
Electrical classification:	none
Safety-related divisional equipment or cables:	none
Nonsafety-related redundant trains or equipment or cables:	none
Surrounded by fire barriers rated at:	3 hours
Except:	basem at (non-rated); exterior underground walls (non-rated);

Consisting of the following Rooms:

EL	Room #	Potential Combustibles	Fire Detection Primary	Fire Detection Backup	Fire Suppression Primary	Fire Suppression Backup
-9350	6100, 6102, 6103, 6104 , 6105 , 6106, 6107, 6108 , 6109, 6150, 6160, 6161 6171 , 6172, 6173, 6174, 6175 , 6176, 6177, 6180, 6182, 6183, 6185 , 6186 , 6187, 6188, 6189	Class IIIB lubricants Cable in sula tion Transient combustibles Class A combustibles	Suppression flowswitch	Manual pulls (outside stairwell at each landing)	Wet-pipe sprinkler 8.1 L/m in per m2 over 140 m2	Hose racks (in nearby stairwells) ABC fire extinguishers
-2350	6103 , 6104, 6105, 6106 , 6107 , 6108, 6109, 6150 , 6160, 6161, 6171, 6200 , 6201, 6202, 6251, 6271 , 6272 , 6273, 6274, 6275, 6276 , 6277, 6278, 6281, 6282, 6283, 6284					
4650	6381, 6382, 6383, 6390, 6391, 6392, 6393, 6394, 6395, 6396					

> 700	Anticipated combustible load , MJ/m2
700	Unsprinklered combustible load limit, MJ/m2

Assuming automatic & manual FP equipment does not function, impact of design basis fire on safe shutdown:

Complete burnout o f all equipment and cables w ithin this Fire A rea a ffects no safety-related or safe shutdown d ivisional equipment; a ll sa fety d ivisions and both redundant trains A and B are operable.

Assuming operation of installed fire extinguishing equipment, impact of fire upon:

Plant operation	None; restoration required before handling radwaste
Radiological release:	Contained within building
Life safety:	Travel distance limits to EXITs meet NFPA 101
Manual firefighting	Access via stairwells and exterior doors

Table 9A.5-5R Radwaste Building (Sheet 2 of 9) [EF3 DEP 11.4-1]

Fire Area:	**F6170**	Description:	Electrical Equipment
Building:	**Radwaste**	Applicable codes:	IBC; Reg Guide 1.189; NFPA 10, 14, 72, 101, 804
Fire Zone Dwg:	9A.2-20R	Building code occupancy clasification:	F-1
		Electrical classification:	none
		Safety-related divisional equipment or cables:	none
		Nonsafety-related redundant trains or equipment or cables:	none
		Surrounded by fire barriers rated at:	3 hours
		Except:	basemat (non-rated); elevator doors (1.5 hr rated); exterior underground walls (non-rated)

Consisting of the following Rooms:			Fire Detection		Fire Suppression	
EL	Room #	Potential Combustibles	Primary	Backup	Primary	Backup
-9350	6170	Electrical equipment Cable insulation	Area-wide ionization	Manual pulls (outside stairwells at each landing)	CO2 fire extinguishers	Hose racks (in nearby stairwells)

< 1400	Anticipated combustible load , MJ/m2
1400	Unsprinklered combustible load limit, MJ/m2

Assuming automatic & manual FP equipment does not function, impact of design basis fire on safe shutdown:

Complete burnout of all equipment and cables within this Fire Area affects no safety-related or safe shutdown divisional equipment; all safety divisions and both redundant trains A and B are operable.

Assuming operation of installed fire extinguishing equipment, impact of fire upon:

Plant operation	None; restoration required before handling radwaste
Radiological release:	None, no radiological materials present
Life safety:	Travel distance limits to EXITs meet NFPA 101
Manual firefighting	Access via stairwells
Property Loss:	Moderate

Table 9A.5-5R Radwaste Building (Sheet 3 of 9) [EF3 DEP 11.4-1]

Fire Area:	**F6190**	Description:	Elevator
Building:	**Radwaste**	Applicable codes:	IBC; Reg Guide 1.189; NFPA 10, 14, 72, 101, 804; ASME A17.1
Fire Zone Dwg:	9A.2-20R 9A.2-21R 9A.2-22R 9A.2-23R	Building code occupancy clasification:	F-1
		Electrical classification:	none
		Safety-related divisional equipment or cables:	none
		Nonsafety-related redundant trains or equipment or cables:	none
		Surrounded by fire barriers rated at:	3 hours
		Except:	basemat (non-rated); elevator doors (1.5 hr rated)

Consisting of the following Rooms:			Fire Detection		Fire Suppression	
EL	Room #	Potential Combustibles	Primary	Backup	Primary	Backup
-9350	6190	Class IIIB lubricants Cable insulation	Area-wide ionization	Manual pulls (outside Elev at each landing)	ABC fire extinguishers (outside Elev at each landing)	Hose racks (in nearby stairwell)
-2350						
4650						
10650						
13650	6580	Class IIIB lubricants Cable insulation Electrical equipment			CO2 fire extinguisher (outside room)	

<700	Anticipated combustible load , MJ/m2	Assuming automatic & manual FP equipment does not function, impact of design basis fire on safe shutdown:	
700	Unsprinklered combustible load limit, MJ/m2		

Assuming operation of installed fire extinguishing equipment, impact of fire upon:

Plant operation	None
Radiological release:	None, no radiological materials present
Life safety:	Travel distance limits to EXITs meet NFPA 101
Manual firefighting	Access via stairwells and hoistway doors
Property Loss:	Negligible

Complete burnout of all equipment and cables within this Fire Area affects no safety-related or safe shutdown divisional equipment; all safety divisions and both redundant trains A and B are operable.

Table 9A.5-5R Radwaste Building (Sheet 4 of 9)

[EF3 DEP 11.4-1]

Fire Area:	**F6191**	Description:	Stairwell A
Building:	**Radwaste**	Applicable codes:	IBC; Reg Guide 1.189; NFPA 10, 14, 72, 101, 804
Fire Zone Dwg:	9A.2-20R 9A.2-21R 9A.2-22R 9A.2-23R	Building code occupancy clasification:	F-1
		Electrical classification:	none
		Safety-related divisional equipment or cables:	none
		Nonsafety-related redundant trains or equipment or cables:	none
		Surrounded by fire barriers rated at:	3 hours
		Except:	basemat (non-rated)

Consisting of the following Rooms:			Fire Detection		Fire Suppression	
EL	Room #	Potential Combustibles	Primary	Backup	Primary	Backup
-9350 -2350 4650 10650 13650	6191	None	Area-wide ionization	Manual pulls (outside stairwell at each landing)	Hose racks	ABC fire extinguishers

negligible	Anticipated combustible load , MJ/m2	Assuming automatic & manual FP equipment does not function, impact of design basis fire on safe shutdown:	Complete burnout of all equipment and cables within this Fire Area affects no safety-related or safe shutdown divisional equipment; all safety divisions and both redundant trains A and B are operable.
700	Unsprinklered combustible load limit, MJ/m2		

Assuming operation of installed fire extinguishing equipment, impact of fire upon:

Plant operation	None
Radiological release:	None, no radiological materials present
Life safety:	Travel distance limits to EXITs meet NFPA 101
Manual firefighting	Access via exterior and interior doors
Property Loss:	Negligible

Table 9A.5-5R Radwaste Building (Sheet 5 of 9) [EF3 DEP 11.4-1]

Fire Area:	**F6192**	Description:	Stairwell B
Building:	**Radwaste**	Applicable codes:	IBC; Reg Guide 1.189; NFPA 10, 14, 72, 101, 804

Fire Zone Dwg:

9A.2-20R
9A.2-21R
9A.2-22R
9A.2-23R

Building code occupancy clasification:	F-1
Electrical classification:	none
Safety-related divisional equipment or cables:	none
Nonsafety-related redundant trains or equipment or cables:	none
Surrounded by fire barriers rated at:	3 hours
Except:	basemat (non-rated)

Consisting of the following Rooms:

EL	Room #	Potential Combustibles	Fire Detection Primary	Fire Detection Backup	Fire Suppression Primary	Fire Suppression Backup
-9350	6192	None	Area-wide ionization	Manual pulls (outside stairwell at each landing)	Hose racks	ABC fire extinguishers
-2350						
4650						
10650						

negligible	Anticipated combustible load , MJ/m2
700	Unsprinklered combustible load limit, MJ/m2

Assuming automatic & manual FP equipment does not function, impact of design basis fire on safe shutdown:

Complete burnout of all equipment and cables within this Fire Area affects no safety-related or safe shutdown divisional equipment; all safety divisions and both redundant trains A and B are operable.

Assuming operation of installed fire extinguishing equipment, impact of fire upon:

Plant operation	None
Radiological release:	None, no radiological materials present
Life safety:	Travel distance limits to EXITs meet NFPA 101
Manual firefighting	Access via exterior and interior doors
Property Loss:	Negligible

Table 9A.5-5R Radwaste Building (Sheet 6 of 9) [EF3 DEP 11.4-1]

Fire Area:	**F6193**	Description:	Stairwell C
Building:	**Radwaste**	Applicable codes:	IBC; Reg Guide 1.189; NFPA 10, 14, 72, 101, 804
Fire Zone Dwg:	9A.2-20R 9A.2-21R 9A.2-22R 9A.2-23R	Building code occupancy clasification:	F-1
		Electrical classification:	none
		Safety-related divisional equipment or cables:	none
		Nonsafety-related redundant trains or equipment or cables:	none
		Surrounded by fire barriers rated at:	3 hours
		Except:	basemat (non-rated)

Consisting of the following Rooms:			Fire Detection		Fire Suppression	
EL	Room #	Potential Combustibles	Primary	Backup	Primary	Backup
-9350	6193	None	Area-wide ionization	Manual pulls (outside stairwell at each landing)	Hose racks	ABC fire extinguishers
-2350						
4650						
10650						

negligible	Anticipated combustible load , MJ/m2	
700	Unsprinklered combustible load limit, MJ/m2	

Assuming automatic & manual FP equipment does not function, impact of design basis fire on safe shutdown:

Complete burnout of all equipment and cables within this Fire Area affects no safety-related or safe shutdown divisional equipment; all safety divisions and both redundant trains A and B are operable.

Assuming operation of installed fire extinguishing equipment, impact of fire upon:

Plant operation	None
Radiological release:	None, no radiological materials present
Life safety:	Travel distance limits to EXITs meet NFPA 101
Manual firefighting	Access via exterior and interior doors
Property Loss:	Negligible

Table 9A.5-5R Radwaste Building (Sheet 7 of 9) [EF3 DEP 11.4-1]

Fire Area:	**F6194**	Description:	Stairwell D
Building:	**Radwaste**	Applicable codes:	IBC; Reg Guide 1.189; NFPA 10, 14, 72, 101, 804

Fire Zone Dwg:

9A.2-20R
9A.2-21R
9A.2-22R
9A.2-23R

Building code occupancy clasification:	F-1
Electrical classification:	none
Safety-related divisional equipment or cables:	none
Nonsafety-related redundant trains or equipment or cables:	none
Surrounded by fire barriers rated at:	3 hour
Except:	basemat (non-rated)

Consisting of the following Rooms:

EL	Room #	Potential Combustibles	Fire Detection Primary	Fire Detection Backup	Fire Suppression Primary	Fire Suppression Backup
-9350	6194	None	Area-wide ionization	Manual pulls (outside stairwell at each landing)	Hose racks	ABC fire extinguishers
-2350						
4650						
10650						

negligible	Anticipated combustible load , MJ/m2
700	Unsprinklered combustible load limit, MJ/m2

Assuming automatic & manual FP equipment does not function, impact of design basis fire on safe shutdown:

Complete burnout of all equipment and cables within this Fire Area affects no safety-related or safe shutdown divisional equipment; all safety divisions and both redundant trains A and B are operable.

Assuming operation of installed fire extinguishing equipment, impact of fire upon:

Plant operation	None
Radiological release:	None, no radiological materials present
Life safety:	Travel distance limits to EXITs meet NFPA 101
Manual firefighting	Access via exterior and interior doors
Property Loss:	Negligible

Table 9A.5-5R Radwaste Building (Sheet 8 of 9) [EF3 DEP 11.4-1]

Fire Area:	**F6270**	Description:	Radwaste Control Room Complex
Building:	**Radwaste**	Applicable codes:	IBC; Reg Guide 1.189; NFPA 10, 14, 72, 101, 804

Fire Zone Dwg:

9A.2-21R
9A.2-22R

Building code occupancy clasification:	B
Electrical classification:	none
Safety-related divisional equipment or cables:	none
Nonsafety-related redundant trains or equipment or cables:	none
Surrounded by fire barriers rated at:	3 hours
Except:	elevator doors (1.5 hr rated); basemat for 6287 (non-rated)
interior fire barriers rated at:	1 hours
between:	rooms 6270 and 6287

Consisting of the following Rooms:

EL	Room #	Potential Combustibles	Fire Detection: Primary	Fire Detection: Backup	Fire Suppression: Primary	Fire Suppression: Backup
-2350	6270	Electrical equipment Cable insulation Class A combustibles	Area-wide ionization	Manual pulls (outside stairwells at each landing)	CO2 fire extinguishers	Hose racks (in nearby stairwells)
	6270 below floor	Cable insulation			Hose racks (in nearby stairwells)	ABC fire extinguishers
	6287, 6288, 6289	Electrical equipment Cable insulation Class A combustibles				

<1400	Anticipated combustible load , MJ/m2
1400	Unsprinklered combustible load limit, MJ/m2

Assuming automatic & manual FP equipment does not function, impact of design basis fire on safe shutdown:

Complete burnout of all equipment and cables within this Fire Area affects no safety-related or safe shutdown divisional equipment; all safety divisions and both redundant trains A and B are operable.

Assuming operation of installed fire extinguishing equipment, impact of fire upon:

Plant operation	None; restoration required before handling radwaste
Radiological release:	None, no radiological materials present
Life safety:	Travel distance limits to EXITs meet NFPA 101
Manual firefighting	Access via stairwells
Property Loss:	Moderate

Table 9A.5-5R Radwaste Building (Sheet 9 of 9) [EF3 DEP 11.4-1]

Fire Area:	**F6301**	Description:	HVAC Equipment
Building:	**Radwaste**	Applicable codes:	IBC; Reg Guide 1.189; NFPA 10, 14, 72, 90A, 101, 804
Fire Zone Dwg:	9A.2-22R 9A.2-23R	Building code occupancy clasification:	F-1
		Electrical classification:	none
		Safety-related divisional equipment or cables:	none
		Nonsafety-related redundant trains or equipment or cables:	none
		Surrounded by fire barriers rated at:	3 hours
		Except:	elevator doors (1.5 hr rated)

Consisting of the following Rooms:			Fire Detection		Fire Suppression	
EL	Room #	Potential Combustibles	Primary	Backup	Primary	Backup
4650	6380	Class IIIB lubricants Cable insulation Filter media	Area-wide ionization	Manual pulls (outside stairwells at each landing)	Hose racks	ABC fire extinguishers
10650	6480					

<700	Anticipated combustible load , MJ/m2
700	Unsprinklered combustible load limit, MJ/m2

Assuming automatic & manual FP equipment does not function, impact of design basis fire on safe shutdown:

Complete burnout of all equipment and cables within this Fire Area affects no safety-related or safe shutdown divisional equipment; all safety divisions and both redundant trains A and B are operable.

Assuming operation of installed fire extinguishing equipment, impact of fire upon:

Plant operation	None; restoration required before handling radwaste
Radiological release:	None, no radiological materials present
Life safety:	Travel distance limits to EXITs meet NFPA 101
Manual firefighting	Access via stairwells
Property Loss:	Minor

Table 9A.5-7R Yard (Sheet 1 of 2)

[EF3 COL 9A.7-2-A]

Fire Area:	F8100	Description:	Hydrogen and Oxygen Storage Area
Building:	Yard	Applicable Codes:	IBC; Reg. Guide 1.189; NFPA 10,24, 50A, 72, 497, 804

Fire Zone Dwg: 9A.2-33R

Building code occupancy classification:	U per IBC 312.1
Electrical classification:	Class I Div 2 Group B
Safety-related divisional equipment or cables:	None
Non-safety-related redundant trains or equipment or cables:	None
Surrounded by fire barriers rated at:	None
Except:	none

Consisting of the following rooms:			Fire Detection		Fire Suppression	
EL	Room#	Potential Combustibles	Primary	Backup	Primary	Backup
To be determined during detailed design.	Hydrogen and Oxygen Storage	860 m3 hydrogen	H2 system instrumentation	Manual pull (outside hazard)	Hydrant	ABC fire extinguishers

>700	Anticipated combustible load, MJ/m^2
N/A	Non-sprinkled combustible load limit, MJ/m^2

Assuming all fire suppression systems inoperable, effect of design basis fire on safe shutdown:

Complete burnout of all equipment and cables within this fire area affects no safety-related or safe shutdown divisional equipment; all safety divisions and both redundant trains A and B are operable.

Assuming operation of fire suppression systems, effect of fire upon:

Plant operation:	Turbine power reduction (due to loss of H2 makeup)
Radiological release:	None, no radiological materials present
Life safety:	N/A
Manual firefighting:	Access all around
Property loss:	Moderate

Table 9A.5-7R Yard (Sheet 2 of 2)

[EF3 COL 9A.7-2-A]

Fire Area:	F8101	Description:	Intake Area
Building:	Station Water Intake	Applicable Codes:	IBC; Reg Guide 1.189; NFPA 15, 45, 72, 804

Fire Zone Dwg: 9A.2-201

Building code occupancy classification:	F-1
Electrical classification:	N/A
Safety-related divisional equipment or cables:	N/A
Non-safety-related redundant trains or equipment or cables:	N/A
Surrounded by fire barriers rated at:	N/A
Except:	

Consisting of the following rooms:			Fire Detection		Fire Suppression	
EL	Room#	Potential Combustibles	Primary	Backup	Primary	Backup
To be determined during detailed design.	To be determined during detailed design.	To be determined during detailed design.	Manual pulls (at EXITs)	None	Wet-pipe sprinkler (Sprinkler parameters to be determined during detailed design)	Fire extinguishers Yard hydrants

>700	Anticipated combustible load, MJ/m^2
700	Non-sprinkled combustible load limit, MJ/m^2

Assuming all fire suppression systems inoperable, effect of design basis fire on safe shutdown:

Complete burnout of all equipment and cables within this Fire Area affects no safety-related or safe shutdown divisional equipment; all safety divisions are operable.

Assuming operation of fire suppression systems, effect of fire upon:

Plant operation:	To be determined during detailed design.
Radiological release:	None, no radiological materials present.
Life safety:	To be determined during detailed design.
Manual firefighting:	To be determined during detailed design.
Property loss:	To be determined during detailed design.

Figure 9.A-2-20R Radwaste Building Fire Protection Zones EL –9350 [EF3 DEP 11.4-1]

{{{Security-Related Information – Withheld Under 10 CFR 2.390}}}

See Fermi 3 COLA Part 9

Figure 9.A-2-21R Radwaste Building Fire Protection Zones EL –2350 [EF3 DEP 11.4-1]

{{{Security-Related Information – Withheld Under 10 CFR 2.390}}}

See Fermi 3 COLA Part 9

Figure 9.A-2-22R Radwaste Building Fire Protection Zones EL 4650 [EF3 DEP 11.4-1]

{{{Security-Related Information – Withheld Under 10 CFR 2.390}}}

See Fermi 3 COLA Part 9

Figure 9.A-2-23R Radwaste Building Fire Protection Zones EL 10650 [EF3 DEP 11.4-1]

{{{Security-Related Information – Withheld Under 10 CFR 2.390}}}

See Fermi 3 COLA Part 9

Figure 9.A-2-24R Radwaste Building Fire Protection Zones Section A-A and Section B-B [EF3 DEP 11.4-1]

{{{Security-Related Information – Withheld Under 10 CFR 2.390}}}

See Fermi 3 COLA Part 9

Figure 9A.2-33R Site Fire Protection Zone ESBWR Plot Plan

[EF3 COL 9A.7-1-A]

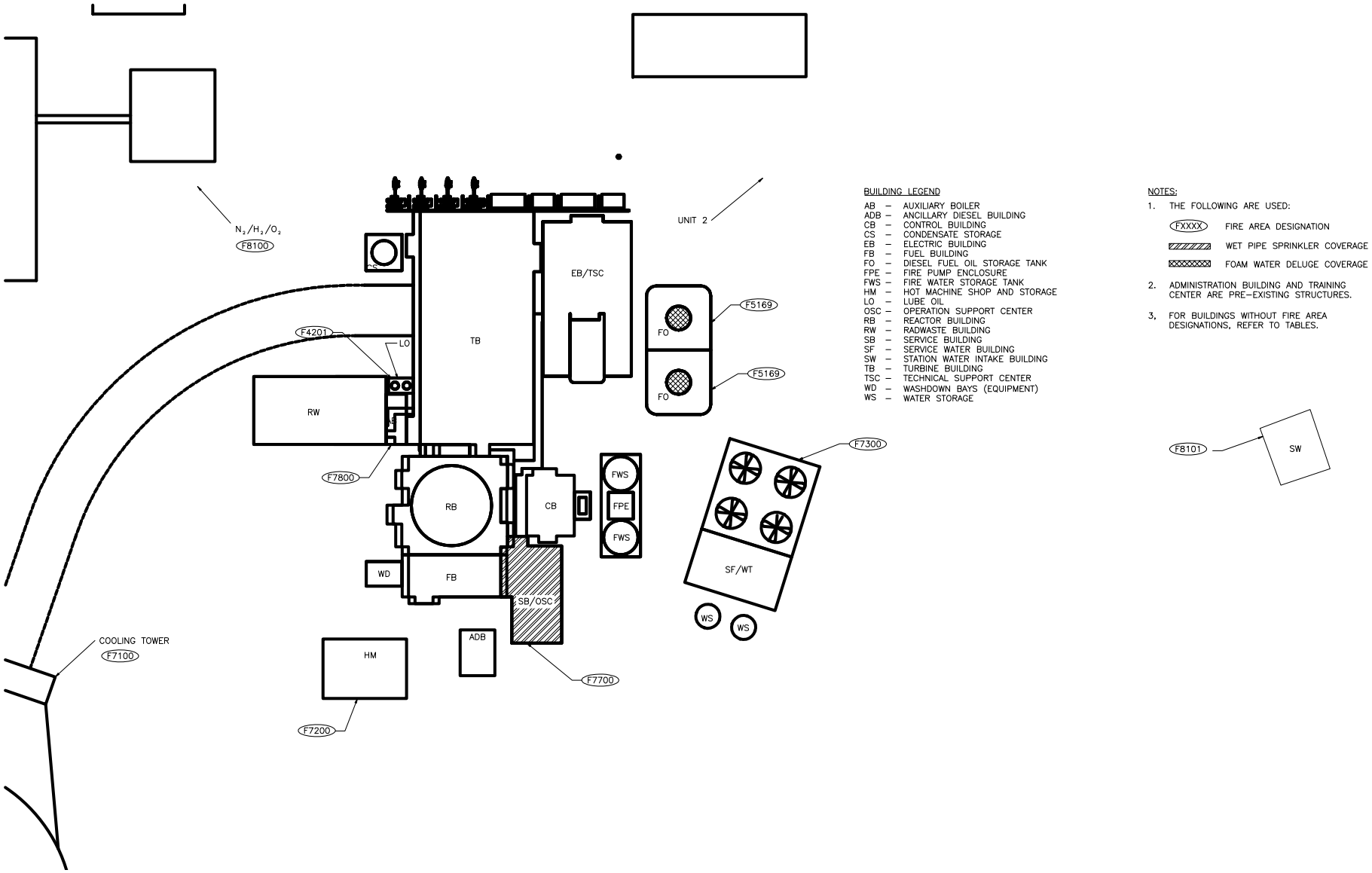

Figure 9A.2-201 Fire Zones - Station Water Intake Building

[EF3 COL 9A.7-1-A]

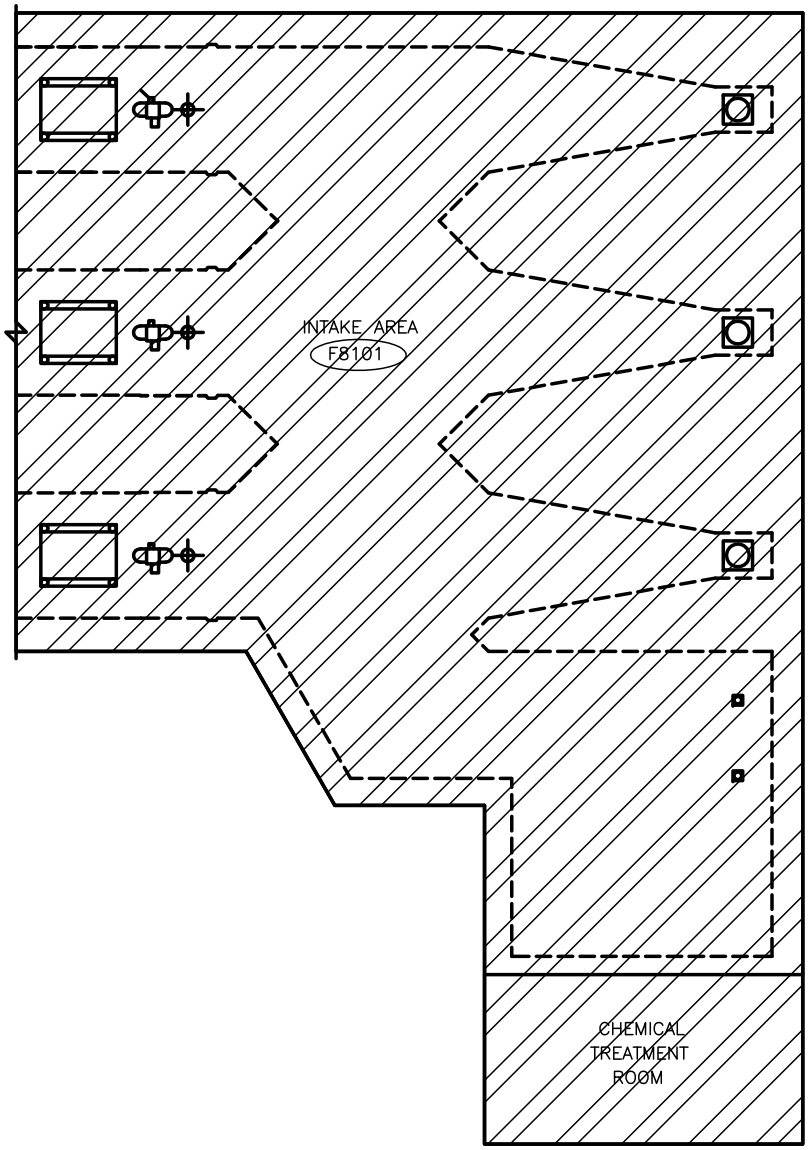

NOTES:

1. THE FOLLOWING ARE USED:

   FXXXX — FIRE AREA DESIGNATION

   WET PIPE SPRINKLER COVERAGE

   FOAM WATER DELUGE COVERAGE

2. ADMINISTRATION BUILDING AND TRAINING CENTER ARE PRE–EXISTING STRUCTURES.

3, FOR BUILDINGS WITHOUT FIRE AREA DESIGNATIONS, REFER TO TABLES.

Appendix 9B Summary of Analysis Supporting Fire Protection Design Requirements

This section of the referenced DCD is incorporated by reference with no departures or supplements.