invensys

Operations Management

Letter No. NRC-V10-10-004

April 9, 2010

United States Nuclear Regulatory Commission
Mr. Jonathon Rowley, Project Manager
M/S 12D2
One White Flint North
11555 Rockville Pike
Rockville, MD 20852-2738

Subject: Nuclear Safety Related Qualification of the Tricon TMR Programmable Logic Controller (PLC) – Update to Qualification Summary Report Submittal and "Application for Withholding Proprietary Information from Public Disclosure" (TAC NO. ME1906)

References:

1. Letter, J. Polcyn (Invensys) to NRC, June 1, 2009, subject: NRC Safety Evaluation Report, "Review of Triconex Corporation Topical Reports 7286-545, Qualification Summary Report, and 7286-546, Amendment 1 to Qualification Summary Report, Revision 1", Letter No. NRC-V10-09-001.
2. Letter, B. Haynes (Invensys) to NRC, April 6, 2010, subject: Nuclear Safety Related Qualification of the Tricon TMR Programmable Logic Controller (PLC) – Update to Qualification Summary Report Submittal and "Application for Withholding Proprietary Information from Public Disclosure", Letter No. NRC-V10-10-003.

In preparation for the NRC safety evaluation of the V10 Tricon TMR PLC, the staff visited Invensys at its Irvine, California, facility on January 21 and 22, 2010. As part of the information exchange that occurred over the two days, Invensys presented to the staff on various technical issues. The staff provided feedback on the technical presentations, and made a number of useful suggestions on the information the staff would need for the safety evaluation of the V10 Tricon TMR PLC. In Reference 2, Invensys committed to submitting the following documents to support the staff review:

(1) A revised topical report on the V10 Tricon TMR PLC, to include a redline-strikeout version that clearly annotates the differences between the V9 and V10 Tricon versions;

(2) An additional 54 technical documents pertaining to the V10 Tricon TMR PLC; during the January information exchange with NRC, the staff and Invensys performed a line-by-line review of the ISG6 table to finalize the list of documents to submit for the safety evaluation and identified these additional 54 documents required by the staff;

(3) A whitepaper, NTX-SER-09-06 describing the process Invensys follows during the development of programmable logic devices, field programmable gate arrays (FPGAs), etc.; the document will address legacy development up to and including V10.5, as well as the process going forward to ensure recent NRC guidance on FPGA-based safety systems is incorporated into future Tricon releases;

(4) A revision to document SER Maintenance Process, NTX-SER-09-20, that clarifies and enhances the proposed SER maintenance process as compared to previous revisions of the paper;

(5) A revision to Tricon V9.5.3 to V10.2.1 Differences Document, NTX-SER-09-05, that provides additional clarity on product software configuration, structure, and development path;

(6) A Program Manual that will govern the Tricon TMR PLC nuclear system integration process, including nuclear application software development; this will be a revision to NTX-SER-09-21;

D062
NRR

(7) A revision to the Invensys ISG2 & ISG4 Compliance Paper, NTX-SER-09-10, that incorporates technical details into the discussion on conformance of the V10 Tricon TMR PLC communication features and protocols to the staff guidance on safety system communications; and

(8) A revision to the Invensys Cyber Security Program Plan Licensing Topical Report (LTR) that will address anticipated regulatory changes as presented in Draft Guide-1249.

Items 1 and 2 in the above list were enclosed in Reference 2. Items 3 through 5, enclosed in this letter and listed on Attachment 1, are amplifications and/or clarifications of technical information already provided to the staff to help minimize requests for additional information during the formal review of the V10 Tricon TMR PLC. Items 6 through 8 will be submitted in accordance with the schedule in Table 1 below. We will advise of any changes to this schedule:

Table 1. Supplementary document submittal schedule.

Document	Anticipated Submittal Date
Nuclear System Integration Program Manual, NTX-SER-09-21[1], Revision 1	April 16, 2010
Tricon Applications in Nuclear Reactor Protection Systems – Compliance with NRC Interim Guidance ISG2 & ISG4, NTX-SER-09-10, Revision 1	April 16, 2010
Invensys Security Program LTR, 7286-545-2-P[2], Revision 1	May 7, 2010

[1]Document formerly titled, "Summary of The Invensys Project Procedures Manual for Safety-Related Work"
[2]Document formerly titled, "Invensys Cyber Security Program Plan Licensing Topical Report"

Also enclosed are two CDs containing several documents that were previously submitted on NRC Letters indicated in Table 2 below. The files are being resubmitted to reflect additional information and clarifications. The files in Enclosure 2 supersede in their entirety the documents previously submitted as shown in the table below:

Table 2. Superseded files.

New File	Replaces Old File	Old File Transmittal Letter
[003R2_DiffV9V10_P]	*[003R1_DiffV9V10_P]*	*NRC-V10-09-006*
[010R1_SERMaint.pdf]	*[010E3_SERMaint.pdf]*	*NRC-V10-09-003*
[015R2_DiffV9V10_NP.pdf]	*[015R1_DiffV9V10_NP.pdf]*	*NRC-V10-09-006*

Invensys is also providing this letter as our "Application for Withholding" pursuant to the provisions of 10 CFR Part 2.390, Paragraph (b)(1). This submittal contains commercial strategic information proprietary to Invensys and customarily held in confidence. As previously identified in this letter, the proprietary material for which this withholding is requested has been specifically identified. In accordance with 10 CFR Part 2.390, Affidavit No. TCXNRC-10-02 accompanies this transmittal and sets forth the basis for which the identified proprietary information may be withheld from public disclosure. Accordingly, it is respectfully requested that the specified information which is proprietary to Invensys be withheld from public disclosure in accordance with 10 CFR Part 2.390.

Invensys has given its best effort to address all of the staff's comments and questions pertinent to the V10 Tricon TMR PLC to ensure an expeditious safety evaluation. However, we recognize that additional information may be required by the staff. We look forward to supporting the staff on this important effort.

invensys
Operations Management

Letter No. NRC-V10-10-004

Correspondence with regard to this transmittal should be directed to the following:

Mr. Brian Haynes
Project Manager
Invensys
15345 Barranca Parkway
Irvine, California 92618

If there are any questions on this submittal or any of its enclosures, please contact me at (949) 885-0778.

Sincerely,

FOR BRIAN HAYNES

Brian Haynes
Project Manager
Invensys

cc: Ms. Stacey Rosenberg, Branch Chief – NRR – CDs Only
Mr. William Kemper, Branch Chief – NRR – CDs Only
Mr. Andy Sykes – Invensys – Letter Only
Mr. Steve Blair – Invensys – Letter Only
Mr. Clayton Scott – Invensys – Letter Only
Mr. Richard Lilleston – Invensys – Letter Only

Attachment/Enclosures

ATTACHMENT 1
Enclosure Listing – CD 12 & 13 Content

Enclosure Description	*CD12**	*CD13*	*[filename] [size MB]*
Enclosure 1: - Affidavit #TCXNRC-10-02	X	X	*[138_Affidavit10_2.pdf] [0.2]*
Enclosure 2: Revisions to Previously Submitted Documents			
Differences between the Tricon V9.5.3 and the Tricon V10.2.1 System – NTX-SER-09-05, Rev 2*	X	---	*[003R2_DiffV9V10_P.pdf] [1.2]*
Differences between the Tricon V9.5.3 and the Tricon V10.2.1 System – NTX-SER-09-05, Rev 2 **	X	X	*[015R2_DiffV9V10_NP.pdf] [0.9]*
SER Maintenance Process – NTX-SER-09-020, Rev 1	X	X	*[010R1_SERMaint.pdf] [0.2]*
Enclosure 3: New Invensys White Paper on PLDs			
Triconex Development Processes for Programmable Logic Devices in Nuclear-Qualified Products – NTX-SER-09-06, Rev 0*	X	---	*[139_PLDDev_P.pdf] [3.0]*

*) Document Contains Invensys Proprietary material

**) Non-proprietary version of Proprietary document (redacted)

Notes:

(a) CD#12 contains Proprietary Documents (among all files). CD#13 contains only Non-Proprietary Documents (Publicly Available).

(b) Non-Proprietary version of NTX-SER-09-06, Rev 0 not provided due to the predominantly proprietary content.

AFFIDAVIT No. TCXNRC-10-02
Re: Request for Withholding from Public Disclosure per 10CFR2.390

STATE OF CALIFORNIA)
) ss
COUNTY OF ORANGE)

I, Gary Hufton, being duly sworn, hereby say and depose:

1. I am Director of Control Hardware Development at Invensys, and as such I have been specifically delegated the function of reviewing company proprietary information sought to be withheld from public disclosure in connection with the nuclear safety related qualification of the TRICON Programmable Logic Controller (PLC) system and am authorized to apply for its withholding on behalf of Invensys.

2. The information sought to be withheld is contained in the document(s) described below:

   (1) Differences between the Tricon V9.3.5 System & the Tricon V10.2.1 System – NTX-SER-09-05, Rev2
   (2) Triconex Development Processes for Programmable Logic Devices in Nuclear-Qualified Products – NTX-SER-09-06, Rev 0

   Each of the indicated documents contains information considered to be proprietary. Proprietary material in the enclosed documents is indicated by brackets [ ] or other similar markings as required by 10CFR2.390(b)(1)(i)(B). Non-proprietary versions of selected documents (with specific proprietary parts removed) are also being provided, as indicated in the associated Transmittal letter.

   This information is a collection of key documents associated with ongoing upgrade and maintenance of qualification of the Tricon PLC. This will allow the NRC to verify compliance with current regulatory requirements in support an update to the SER for the Tricon PLC System and associated Triconex Topical Report 7286-545-1-A.

3. I am making this affidavit in conformance with the provisions of 10CFR Part 2.390 of the Commission's regulations and in conjunction with the Invensys Triconex application for withholding accompanying this Affidavit.

4. I have personal knowledge of the criteria and procedures utilized by Invensys in designating information as a trade secret, privileged, or as confidential commercial or financial information. Some examples of categories of information which fit into the definition of proprietary information are:

   a) Information which discloses process, method, or apparatus, including supporting data and analyses, where prevention of its use by Invensys Triconex's competitors without license or contract from Invensys constitutes a competitive economic advantage over other companies in the industry.

b) Information, which if used by a competitor, would reduce his expenditure of resources or improve his competitive position in the design, manufacture, shipment, installation, assurance of quality, or licensing of a similar product.
c) Information which reveals cost or price information, production capacities, budget levels, or commercial strategies of Invensys, its customers, its partners, or its suppliers.
d) Information which reveals aspects of past, present, or future Invensys Triconex customer-funded development plans or programs, of potential commercial value to Invensys.
e) Information which discloses patentable subject matter for which it may be desirable to obtain patent protection.
f) Information obtained through Invensys Triconex actions which could reveal additional insights into Nuclear safety related PLC equipment qualification processes and regulatory proceedings, and which are not otherwise readily obtainable by a competitor.

Information to be withheld is considered to be proprietary based on the reasons set forth in paragraphs 4 (a), (b), and (f) above.

5. These documents describe the details of a program to qualify Triconex equipment which has undergone nuclear qualification testing. Product design and development details are also represented. Invensys Triconex is the first manufacturer of a PLC to fully implement the requirements set forth in the EPRI TR-107330, which has been endorsed by the Commission in an SER. Invensys Triconex has expended a significant amount of money and effort involving numerous contractors over a 12 year time period to develop and implement an ongoing successful approach to its qualification and test program. Information developed relating to test plans, approaches, equipment, specific problems encountered, licensing perspectives, and lessons learned has significant value because of the resources expended to successfully accomplish this process and the usefulness of this knowledge to potential competitors.

   Specific test data showing compliance with requirements and demonstrating technical capability of the equipment has substantial commercial value because it provides the basis for qualifying Triconex equipment to be sold for safety-related digital upgrades to nuclear plants. Existing options for digital upgrades in the nuclear industry are limited. We believe that ongoing successful nuclear qualification upgrades of the Invensys Triconex products, already well known in non-nuclear applications, will continue to give Invensys a competitive advantage in this field.

   Disclosure of information in these documents would cause substantial harm to the competitive position of the Invensys, as there are other competing companies who wish to develop, qualify, and sell digital control systems for safety related application in nuclear power plants. Competing firms could use our experience, successful approaches, and technical information to facilitate their own equipment qualification efforts and/or product design without compensating Invensys.

6. Pursuant to the provisions of paragraph (b)(4) of Section 2.390 of the Commission's regulations, the following is furnished for consideration by the Commission in determining whether the information sought to be withheld from public disclosure should be withheld.
   (i) The information sought to be withheld from public disclosure is owned and has been held in confidence by Invensys.
   (ii) The information is of a type customarily held in confidence by Invensys and not customarily disclosed to the public. Invensys has a rational basis for determining the types of information customarily held in confidence by it and, in that connection, utilizes a system to determine when and whether to hold certain types of information in confidence. The application of that system and the substance of that system constitute Invensys policy and provide the rational basis required.

(iii) The information is being transmitted to the Commission in confidence and, under the provisions of 10CFR Part 2.390, it is to be received in confidence by the Commission.

(iv) This information is not readily available in public sources.

(v) Public disclosure of this proprietary information is likely to cause substantial harm to the competitive position of Invensys, because it would enhance the ability of competitors to provide similar design of PLC or qualify similar equipment using similar project methods, equipment, testing approach, contractors, or licensing approaches. As described in section 5, this information is the result of considerable expense to Invensys and has great value in that it will assist Invensys in providing Triconex digital upgrade equipment and services to a new, expanding markets not currently served by the company.

7. The foregoing statements are true and correct to the best of my knowledge, information, and belief.

Gary Hufton
Director of Control Hardware Development
Invensys

Sworn to and subscribed before me

this 4 day of April, 2010

Notary Public

State of California
County of Orange County
Subscribed and sworn to (or affirmed) before me
on this 4 day of April, 2010
by
proved to me on the basis of satisfactory evidence
to be the person(s) who appeared before me.
Signature (Seal)

V. MATHESON
COMM. # 1862131
NOTARY PUBLIC-CALIFORNIA
ORANGE COUNTY
My Comm. Expires AUG 21, 2013

invensys

NUCLEAR QUALIFIED PRODUCTS

INVENSYS TRICONEX
SAFETY EVALUATION REPORT (SER)
MAINTENANCE PROCESS

Document No.: NTX-SER-09-20

Revision: 1

Issue Date: April 7, 2010

MAINTENANCE OF INVENSYS TRICONEX TOPICAL REPORT AND SER

Background

Invensys is enhancing its Quality Management System to address actions that are necessary to maintain the Triconex system Topical Report (7286-545-1-A) and to assure nuclear licensees that the Tricon Platform provided for their application is always within the boundaries of the current US Nuclear Regulatory Commission's Safety Evaluation Report (SER). Current procedures do not address the gap between products listed in the 2001 V9 SER and nuclear product upgrades that have been developed subsequent to the SER. Recognizing that this disparity creates additional licensing burdens for Invensys customers and regulators, this SER Maintenance Process is being established.

Nuclear Qualification Maintenance

Current nuclear qualification procedures define the actions necessary to address evolutionary upgrades and general product maintenance for Triconex nuclear products. New or upgraded equipment may be added to the Nuclear Qualified Equipment List (NQEL), provided it has been evaluated or undergone further testing in accordance with applicable Engineering Department procedures. Similarly, any new or upgraded software for the Triconex platform may be added to the NQEL in accordance with the evaluation process defined in the Engineering Department procedures.

Change Impact Analysis

Invensys Triconex has well-established existing processes for ongoing review of changes to its products for impact on their qualification. These processes include a review of hardware and software changes to assure that performance and environmental characteristics of the system are not reduced by the proposed change and to assure that fit, form, and function are maintained. Procedure EDM 21.30 requires that, as part of the Change Control Board (CCB) review of proposed product changes (commercial and nuclear), a Change Impact Analysis must be performed. Procedures provide evaluation criteria, guidance on actions to be taken, and measures for documenting the review. Under this process, each change is screened for impact on existing product qualifications and certifications, including nuclear. When a change is found to have a potential impact on the critical characteristics of nuclear qualified component, a decision is made to either (1) initiate further action to qualify the change per nuclear qualification procedures or (2) to reject the change for nuclear use and appropriately document the restrictions.

New Process Additions

To expand the scope of this product maintenance process, an additional SER Impact Review is being added to further evaluate changes for consistency with the existing NRC SER. The intent of this new evaluation is to identify any safety issues related to significant platform or programmatic changes that have not been reviewed by the NRC (similar to a 10CFR50.59 evaluation). Platform and process commitments contained in the Topical Report and its associated SER form the basis for NRC approval of the Tricon platform. To confirm continuing validity of the SER basis, Invensys Triconex will implement SER Impact Reviews on all potentially significant changes using a standardized checklist and established review criteria. To the extent that routine product and process changes are confirmed to be within the established criteria, the Triconex platform will be considered to be consistent and current with the latest SER/Topical Report and marketed as such. This will be the normal case for a stable, widely-used platform such as the Tricon, where product changes are primarily driven by maintenance issues and evolutionary improvements. However, if a major hardware, software, or process change creates a potentially unreviewed safety issue, the process will assure that NRC review and approval (and a revised SER) is obtained prior to Invensys release of the affected products for nuclear safety-related use.

Review Criteria

The SER Impact Review will include consideration of the following examples of major changes that would require further evaluation:

1. Major Platform Changes, e.g.:
   - Change to basic system architecture
   - New Main Processor module
   - Different application programming model
   - New product or functionality of a type not previously evaluated in the SER
2. Significant Process Changes, e.g.:
   - Design process (major development process changes)
   - QA program (reduction in commitment to quality standards)
   - Elimination of independent third party review process
3. Changes that would decrease commitments in the current SER, e.g.:
   - Reduction in performance or Environmental Qualification characteristics
   - Reduction in other NRC approval bases or assumptions
   - Substantive change to Topical Report Section 5.0, Processes and Policies

Procedure Action

Review criteria similar to these will be incorporated into Invensys Triconex procedures along with appropriate guidance for further processing of items that are deemed to adversely impact the SER.

Provisions for updates to the Topical Report and NRC interface, when warranted, will be provided in the procedures. Attached is a sample checklist format that could be considered for use, subject to further development of the process procedures.

Scope of Reviews

Potentially significant changes can come from several sources. Per EDM 21.30, changes that impact nuclear qualified hardware or software are approved only if properly qualified and reflected on the NQEL. Also, in the V10 Triconex Topical Report, Invensys has made commitments to maintain selected processes and policies consistent with benchmark documents, as listed in section 5.0. Accordingly, Invensys Triconex procedures will require an SER Impact Review, as a minimum, for the following conditions:

- All change made to the V10 NQEL (Changes to qualified nuclear HW/SW)
- All changes to QPM 2.0 (Triconex Quality Assurance Program Description)
- All changes to EDM 12.00 (Product Development Process)
- Other procedure changes deemed to be in conflict with applicable TR section 5.0 commitment documents, including
    - Security LTR 7286-545-2
    - Project Integration Manual NTX-SER-09-21
    - SER Maintenance Program NTX-SER-09-20
    - Compliance with ISG-2 & ISG-4 NRX-SER-09-10

The SER Maintenance Program will subject to periodic QA audits.

Records and Reports

Records of all SER Impact Reviews will be maintained, and will be traceable to related platform or process changes. Periodically (not to exceed 24 months), a report will be provided to the NRC summarizing the results of all SER Impact Reviews made during the period. This Report will provide an assessment of ongoing consistency of the Tricon Platform and related processes with the current SER. For changes made during the period that were determined to be potential unreviewed safety issues, the Report shall summarize the actions planned (or in-progress) to secure NRC review and approval prior to implementation of the changes on the nuclear Platform.

Implementation

The Invensys Triconex SER Maintenance Process will be in place and implemented prior to issuance of the V10 SER.

SER Impact Review Checklist (Example)

Description of Change under review _____

Date Evaluated _____ ECO Number (if applicable) _____

(Check applicable box) (Each response requires comment or justification. Attach additional page if necessary)

Yes	No	
☐	☐	1. Is this a change to the basic system architecture? _____
☐	☐	2. Is a new Main Processor being added? _____
☐	☐	3. Is the basic application programming model being changed? _____
☐	☐	4. Does the change introduce a new type of product or functionality not evaluated in the current SER? _____
☐	☐	5. Is the design, verification, or validation process undergoing a major change? _____
☐	☐	6. Is the independent review process being changed or eliminated? _____
☐	☐	7. Is a quality program change being made such that there is a reduction in commitments to existing quality standards? _____
☐	☐	8. Are performance or environmental qualification parameters being reduced? _____
☐	☐	9. Does the change constitute a reduction in other NRC SER approval bases or assumptions (e.g., standards or regulations)? _____
☐	☐	10. Does the change otherwise constitute a substantive change to TR Section 5.0, Processes & Policies? _____

	YES to any of the questions: This change may constitute a condition affecting the Nuclear Product that is NOT within the scope of the current SER. This SIR shall be submitted to the NSC for disposition.
	NO to all questions: Based on this change, the Nuclear Product continues to be consistent with the NRC SER dated xx/xx/xxxx.

Comments/Actions _____

Evaluated by: _____ Approved by _____

DRAFT

invensys

NUCLEAR QUALIFIED PRODUCTS

DIFFERENCES BETWEEN THE TRICON V9.5.3 SYSTEM AND THE TRICON V10.2.1 SYSTEM

Non -Proprietary copy per 10CFR2.390
- Areas of proprietary information have been redacted.
- Designation letter corresponds to Triconex proprietary policy categories (Ref. transmittal number NRC-V10-09-001, Affidavit, Section 4.)

Document No.: NTX-SER-09-05

Revision: 2

Issue Date: April 7, 2010

Revision 2 Changes (see change bars)

Section	Description
Section 1.3.1	Added V9 Termination Panel Assembly reference
Section 1.3.3	Added relevant conditional statement from SER
Section 1.3.4:	Redrafted for greater specificity on hardware/software development process evolution
Appendix 6.2:	Added new section to discuss Software Development Trail and source information for V10.2.1 software (renumbered existing Appendices).
Various sections:	Clarified terminology for Shared Memory as "Dual Port Ram" (graphics and text)
Various sections:	Editorial changes

Table of Contents

1.0 INTRODUCTION 4
1.1 BACKGROUND 4
1.2 SYSTEM ARCHITECTURE & SYSTEM LEVEL DIFFERENCES BETWEEN V9.5.3 & V10.2.1 5
1.3 SUMMARY OF DIFFERENCE 7
1.3.1 HARDWARE 7
1.3.2 SOFTWARE (SEE TABLE "SAFETY-RELATED SOFTWARE" IN V9 SER) 9
1.3.3 QUALITY ASSURANCE/PROCEDURES PROCESS CHANGES 10
1.3.4 ENGINEERING/SOFTWARE DEVELOPMENT/DESIGN PROCESS CHANGES 17
1.3.5 REVIEW OF DOCUMENTS CREDITED IN V9.5.3 SER BTP 7-14 EVALUATIONS 21
1.3.6 QUALIFICATION PROCESS 23
1.4 REFERENCES 24
2.0 MAIN PROCESSOR DIFFERENCES 25
2.1 MAIN PROCESSOR HARDWARE DIFFERENCES 25
2.2 MAIN PROCESSOR SOFTWARE DIFFERENCES 27
2.2.1 TRICON V9.5.3 MODEL 3006N MP SOFTWARE 27
2.2.2 TRICON V10.2.1 MODEL 3008N MP SOFTWARE 28
2.2.3 COMPARISON OF TSX AND ETSX 31
2.2.3.1 DIFFERENCES BETWEEN TSX AND ETSX SUBSYSTEMS 32
2.2.4 COMPARISON OF IOC AND COM (MODEL 3006N MP) AND IOCCOM (MODEL 3008N MP) 32
2.2.4.1 DIFFERENCES BETWEEN IOC / COM AND IOCCOM SUBSYSTEMS 33
3.0 I/O MODULES 34
3.1 I/O MODULE HARDWARE 34
3.1.1 ANALOG INPUT (AI) MODULES 34
3.1.2 ANALOG OUTPUT (AO) MODULES 36
3.1.3 DIGITAL INPUT (DI) MODULES 36
3.1.4 DIGITAL OUTPUT (DO) MODULES 37
3.1.5 REMOTE EXTENDER MODULES 38
3.1.6 I/O MODULE TERM PANELS 38
3.1.7 SIGNAL CONDITIONERS 38
3.2 I/O MODULE SOFTWARE 38
3.2.1 ANALOG INPUT (AI) MODULES 39
3.2.2 ANALOG OUTPUT (AO) MODULES 40
3.2.3 DIGITAL INPUT (DI) MODULES 40
3.2.4 DIGITAL OUTPUT (DO) MODULES 41
3.2.5 REMOTE EXTENDER MODULES 41
4.0 COMMUNICATION MODULES 42
4.1 COMMUNICATION MODULE HARDWARE 42
4.2 COMMUNICATION MODULE SOFTWARE 45
5.0 TRISTATION 1131 SOFTWARE 47
6.0 APPENDICES 49
6.1 EMC TEST DIFFERENCES BETWEEN TRICON V9.5.3 AND TRICON V10.2.1 SYSTEMS 50
6.2 V10.2.1 SOFTWARE CHANGE DEVELOPMENT TRAIL 52
6.3 V&V SUMMARY REPORT TRICON V9.6 – TRICON V10.2.1 RELEASES 56

1.0 INTRODUCTION

This document has been created specifically for the purpose of describing the hardware and software differences between the Tricon V9.5.3 system (the current V9 system identified in the existing SER) and the Tricon V10.2.1 system. The information in this document is derived from various internal formal requirements and/or design documents, nuclear qualification documents, etc. References that will be cited often in this document include:

- 9600164-545, Rev 3, Equipment Qualification Summary Report (EQSR)
- 9600164-539, Rev 1, Critical Digital Review (CDR)
- 9600164-535, Rev 1, Software Qualification Report (SQR)
- 9100278-001, Rev1.2, Differences between the TRICON 9.52.1 System and the TRICON 10.2.4 System and V&V Summary
- 9100041-001, rev 17, Triconex Nuclear Qualified Equipment List (Tricon v9 NQEL)
- 9100150-001, rev 6, Tricon v10 Nuclear Qualified Equipment List (Tricon v10 NQEL)

This document is not a specification for the Tricon systems. If there is any discrepancy between this document and the formal documents, the formal documents shall prevail.

1.1 Background

Invensys initiated the Tricon V10.2.1 Nuclear Qualification Upgrade Project to address the contingencies identified in *Triconex Topical Report 7286-545-1-A, Qualification Summary Report* and the *NRC Safety Evaluation Report (SER)* dated December 12, 2001 (ADAMS Accession Number ML013470433). NRC staff noted that the Tricon PLC system did not fully meet the guidance of TR-107330 for seismic, EMI/RFI conducted and radiated emissions, surge withstand, and ESD withstand, requiring the nuclear power plant engineering staff to verify that reported results envelop the specific plant application.

Recognizing that such requirements increase plant contingencies, Invensys initiated modifications of the Tricon to elevate its performance to that required in TR-107330 and the recently issued R.G. 1.180, Revision 1. In addition to EMC hardening of components, Invensys also introduced new processors and features, which required evaluation and verification and validation testing.

The Tricon V10.2.1 system has been developed in accordance with approved Invensys processes and procedures. These processes and procedures are substantially the same as those that were reviewed and approved as part of the V9.5.3 SER issuance, but have since been strengthened based upon Continuous Process Improvement principles and best practices.

As part of the product development cycle, all Tricon system versions after V9.5.3 have been verified and validated at the system, subsystem, and module levels by the Triconex Product Assurance group and by an independent, external third party (TÜV), as per Invensys processes and procedures.

Invensys is interested in mitigating project risk and schedule risk for both our customers and ourselves. We believe we can do this by adhering to guidelines proposed by the NRC in recent public forums and ANS meetings. By requesting the NRC to revise its safety analysis to reflect upgrade of the Tricon V9.5.3 to the Tricon V10.2.1, we will enable a licensee to propose an approved platform that is currently within the boundaries of its approval, as described in the topical report. We believe this will decrease the risk to our customers and potentially minimize the review cycle.

1.2 System Architecture & System Level Differences between V9.5.3 & V10.2.1

Section 2 of the SER describes the Tricon V9.5.3 system architecture. The Tricon V10.2.1 system architecture is the same as that of the previously qualified Tricon V9.5.3 system. The following figure, also in the SER, shows the Triple Modular Redundant (TMR) architecture of all Tricon systems:

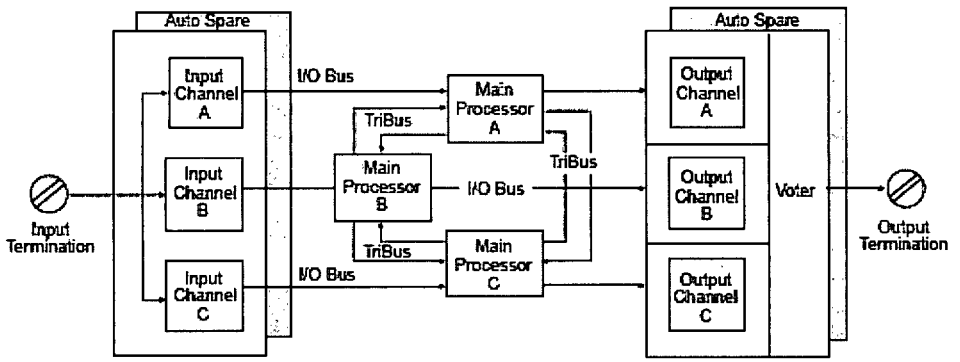

The TriStation 1131 application programming model architecture for the Tricon V10.2.1 system is the same as that of the previously qualified Tricon V9.5.3 system.

Since the time the SER was issued, the Tricon V9.5.3 has had some enhancements as well as maintenance upgrades. The CDR (Triconex report 9600164-539, Rev 1) provides additional details on the history of upgrades to V9.5.3. For the list of new or upgraded modules that went through qualification testing for the Tricon V10.2.1, see section 3.3 of the EQSR (Triconex report 9600164-545, Rev 3).

The Tricon V10.2.1 system includes the following **new modules**:

- A new Main Processor (Model 3008N):
  - Two 50 MHz, 32-bit Freescale Semiconductor MPC860EN microprocessors along with 25 Mb/second Tribus provides quadruple performance of the V9.5.3 Main Processor (Model 3006N).
  - 16 Mbyte of DRAM versus 2 Mbyte of static RAM for the application and Sequence of Events Data

  - See EQSR section 3.1.6, and CDR sections 3.1.1 thru 3.1.5, and 3.1.8
- New SMT-based I/O modules (AI 3721N and DO 3625N):
  - These are next generation I/O modules that use the same basic TMR (Triple Modular Redundant) architecture of the previous I/O modules. The interface to the I/O bus and I/O protocol for communication to the MP is the same as previous I/O modules.
  - Each channel (leg) of the module has an ATMEL AT91R40008 ARM microcontroller and a Xilinx Spartan IIE 1.8V Field Programmable Gate Array (FPGA). Each channel has a separate 2 MB flash memory. The microprocessor's 16-bit bus connects to the FPGA and flash memory.
  - The 3721N AI module provides the following advantages over the previous AI modules for the Tricon V9.5.3 system:
    - A 10 msec scan rate for all the field inputs, compared to the 50 msec scan rate for all the field inputs of previous AI modules (such as the 3700AN).
    - Can be configured for unipolar input (0 to 5 VDC) or bipolar input (-5 to +5 VDC).
    - 14-bit resolution, versus the 12-bit resolution of previous AI modules.
  - The 3625N DO module provides the following advantages over the previous DO modules for the TriconV9.5.3 system:
    - 32 output points, compared to 16 points for the old modules
    - Can be configured as supervised or unsupervised
  - Replace the following V9.5.3 modules:
    - AI 3700AN (0-5 VDC) and AI 3704EN (0-5/0-10 VDC, High Density)
    - DO 3604EN (24 VDC) and DO 3624N (24 VDC, Supervised)
  - See CDR section 3.2 for a detailed discussion of the next generation I/O modules
- AO 3805HN (4-20 mA) module:
  - Supports increased inductive loads
  - Replaces AO 3805EN (4-20 mA)
- PI 3511N – New Pulse Input module:
  - Faster input scan
  - Based on existing PI 3510N module
- Existing Through Hole I/O modules converted to SMT modules (Form, fit, and function compatible)
  - 3701N (0-10 VDC) - Through Hole to 3701N2 (0-10 VDC) – SMT
  - 3501TN 115V AC/DC – Through Hole to 3501TN2 115V AC/DC – SMT
  - 3502EN 48V AC/DC – Through Hole to 3502EN2 48V AC/DC – SMT
  - 3503EN 24V AC/DC – Through Hole to 3503EN2 24V AC/DC – SMT

- A new communication module (TCM 4325AN Fiber Optic):
  - Combines the functionality of the three Tricon V9.5.3 communication modules (EICM 4119AN, NCM 4329N, and ACM 4609N)
  - Improves communication capabilities, including MODBUS TCP protocol support.
  - See CDR section 3.3 for a detailed description of the TCM 4325N; additionally, Appendices A and B to the CDR provide the results of rigorous review of the TCM against NRC requirements

1.3 Summary of Differences

Section 1.0 of the SER contains a list of Tricon V9.5.3 modules approved for use in safety-related applications. The SER also contains a table titled "Safety-related Sofware" in Section 2.2.1 (page 18) that lists software for each Tricon V9.5.3 module, including version numbers. The tables in the following sections compare Tricon V9.5.3 and V10.2.1 hardware modules (section 1.3.1) and software versions (section 1.3.2). See section 3.3 of the EQSR for the list of components that went through qualification testing for Tricon V10.2.1. All components qualified for safety-related use are on the NQEL. Detailed discussions are provided in the CDR on the Main Processor modules (section 3.1), I/O modules (section 3.2), and the communications module (section 3.3).

1.3.1 Hardware

Module	Tricon V9.5.3 System	Tricon V10.2.1 System
Main Processor	3006N	3008N
	Hardware floating point processor	Embedded floating point software
Communication Module	Three modules: ▪ 4119AN (EICM) ▪ 4329N (NCM) ▪ 4609N (ACM)	One module: ▪ 4352AN (TCM) Fiber Optic
I/O Modules Analog Input (AI)	3700AN (0-5 VDC)	3721N (0-5 or -5 to +5 VDC, Differential) Next Generation Module, SMT
	3701N (0-10 VDC) – Through Hole	3701N2 (0-10 VDC) - SMT
	3510N (Pulse Input)	3511N (Pulse Input) – Faster Input Scan
	3703EN (Isolated)	Same
	3708EN (ITC)	Same
	3704EN (0-5/0-10 VDC, High Density)	Removed
	3706AN (NITC)	Removed
I/O Modules Analog Output (AO)	3805EN (4-20 mA)	3805HN (4-20 mA) – Supports increased inductive loads

Module	Tricon V9.5.3 System	Tricon V10.2.1 System
I/O Modules Digital Input (DI)	3501TN 115V AC/DC – Through Hole	3501TN2 115V AC/DC – SMT
	3502EN 48V AC/DC – Through Hole	3502EN2 48V AC/DC – SMT
	3503EN 24V AC/DC – Through Hole	3503EN2 24V AC/DC – SMT
	3504EN 24/48 VDC – Through Hole	Removed
	3505EN 24 VDC – Through Hole	Removed
I/O Modules Digital Output (DO)	3604EN 24 VDC 3624N 24 VDC, Supervised	3625N 24 VDC, Supervised/ Unsupervised Next Generation Module
	3601TN 115 VAC	Same
	3603TN 120 VDC	Same
	3607EN 48 VDC	Same
	3623TN 120 VDC, Supervised	Same
	3636TN (Relay Output)	Same
Remote Extender Modules: **Primary** **Remote**	4210N (Single Mode Fiber Optic cable) 4211N (Single Mode Fiber Optic cable)	4200N (Multi Mode Fiber Optic cable) 4201N (Multi Mode Fiber Optic cable)
I/O Module Term Panels	Version 8 Term Panels Version 9 Term Panels (selected)	Removed Various new Term Panels to support V10 modules
Signal Conditioners	▪ Signal Conditioner (-100 to 100 °C) Pt (7B34-01-1) ▪ Signal Conditioner (0 to 100 °C) Pt (7B34-02-1) ▪ Signal Conditioner (0 to 200 °C) Pt (7B34-03-1) ▪ Signal Conditioner (0 to 600 °C) Pt (7B34-04-1)	Same
	Not included	Four additional Signal Conditioners: ▪ Signal Conditioner (0 to 200 °C) Pt (7B34-CUSTOM) ▪ Signal Conditioner (0 to 600 °C) Pt (7B34-CUSTOM) ▪ Signal Conditioner (0 to 100 mV) (7B30-02-1) ▪ Signal Conditioner (0 to 120 °C) Cu (7B14-C-02-1)
Power Supplies:	ASTEC Power Modules	Alternate Vicor Power Modules
120 V **24 VDC** **230 VAC**	8310N 8311N	8310N2 8311N2 8312N2

Module	Tricon V9.5.3 System	Tricon V10.2.1 System
Chassis:		
Main	8110N	8110N2
Expansion	8111N	8111N
Remote Expansion	8112N	8112N

1.3.2 Software (See Table "Safety-related Software" in V9 SER)

Module	Tricon V9.5.3 System Software Version	Tricon V10.2.1 System Software Version
TriStation 1131 Developer's Workbench ***(Application Development Software)***	v3.1	v4.1.437
Main Processor Software:		
Application Processor	TSX 5211	ETSX 6198 (Build 92)
I/O Processor	IOC 5212	IOCCOM 6054 (Build 92)
COM Processor	COM 5206	
Communication Module Software:		
TCM	Not Applicable	TCM 6136 (Build 92)
Common V9.5.3 COM	ICM 4930	Not Applicable
EICM	IICX 5276	Not Applicable
NCM	NCMX 5028	Not Applicable
ACM	ACMX 5203	Not Applicable

I/O Module Software	Tricon V9.5.3 System Software Version	Tricon V10.2.1 System Software Version
AI 3721N	Not Applicable	AI 6200 (Build 92)
DO 3625N	Not Applicable	DO 6213 (Build 92)
AI 3701N/N2	AI/NITC 4873	AI/NITC 5661
IAI 3703EN	EIAI/ITC 5491	EIAI/ITC 5916
ITC 3708EN	EIAI/ITC 5491	EIAI/ITC 5916
PI 3510N	PI 4559	Not Applicable
PI 3511N	Not Applicable	PI 5647
AO 3805EN/HN	EAO 5595	EAO 5897

I/O Module Software	Tricon V9.5.3 System Software Version	Tricon V10.2.1 System Software Version
DI 3501TN/TN2 **DI 3502EN /EN2** **DI 3503EN/EN2**	EDI 5490	EDI 5909
DI 3505EN **DI 3504EN** **AI 3704EN**	EDI 5490 HDI 5499 HDI 5499	Not Applicable
DO 3601TN **DO 3607EN**	EDO 5488	EDO 5781
DO 3604EN	EDO 5488	Not Applicable
RO 3636TN	ERO 5497	ERO 5777
DO 3603TN	TSDO 5502	Same
DO 3623TN	TSDO 5502	TSDO2 5940
DO 3624N	TSDO 5502	Not Applicable
Remote Extender Modules	RXM 3310	Same

A more detailed overview of the change history of the V10.2.1 software modules is shown in Appendix 6.2.

1.3.3 Quality Assurance/Procedures Process Changes

As stated in the SER for V9.5.3 Tricon PLC, it was originally designed as a commercial-grade system. Independent assessments by MPR Associates and ProDesCon, as described in the SER for V9.5.3, determined that the Triconex development process, including QA program, satisfied the requirements of 10 CFR Part 50 Appendix B and BTP 7-14. Based upon not only these independent assessments, but also other technical information provided to NRC for the safety evaluation, the NRC subsequently determined that the QA program at Triconex satisfied the provisions of Appendix B to 10 CFR Part 50, and the development process for V9.5.3 satisfied the requirements of BTP 7-14, provided that an independent level of V&V, such as by TÜV, continues to be part of the process. Section 4.0 of the NRC SER discusses the NRC evaluation of V9.5.3.

Since the time the SER was issued for V9.5.3, significant improvements to the Triconex QA program have been implemented. Below is a table of the changes to the Triconex QA program since the time when V9.5.3 was approved by NRC for safety-related applications. The changes to the program are enhancements that were identified during program audits and surveillances, and implemented as part of corrective/preventive actions or continual improvement. These were identified by several sources:

1. NRC (whether SER or periodic audit);
2. External, third-party reviews by, for example,
   a. NUPIC
   b. Det Norske Veritas (DNV)
   c. Florida Power & Light
   d. Bechtel National
   e. Atomic Energy Canada Limited (AECL)
   f. TÜV
   g. MPR; or
3. Triconex self-assessments.

Triconex asserts that the changes identified in the below table did not reduce existing commitments to or compliance with the requirements of a 10CFR50 Appendix B Quality Assurance program.

Tables 1 and 2 are summaries of the changes to the QAM and QPM, and Table 3 is the list of new QPM procedures added (by V10.2.1 timeframe/2006) since the time V9.5.3 was approved (2001).

Table 1: Summary of Changes to Quality Assurance Management procedures (2001-2006)

QAM Procedure	Title	V9.5.3 Rev	V10.2.1 Rev	Summary of Changes
0.0	Introduction	015	029	Updated as procedures are added, deleted, or superseded, as well as to reflect editorial changes (e.g., procedure title changes).
0.1	Table of Contents	015	029	
0.2	Quality Assurance Manual History	015	Del'd	No longer used as part of QA procedures.
0.3	Quality System Compliance Cross-Reference	001	003	Minor updates as new procedures are added. No reduction in commitments
1.1	Quality Policy	007	011	Major revision. Revised Quality Policy to include commitments to implementing best practices and continual process improvement
1.2	Triconex Organization	009	018	Organizational changes to address merger of Triconex with Invensys Process Systems. QA authority established at each company location. Enhancements include establishment of various standing committees and review boards to address and resolve product QA issues.
1.3	Management Review	006	012	Enhancements to basic program, such as additional commitment to senior management oversight of the quality management system, to include process measurement and analysis (through, e.g., self-assessments) to facilitate continuous improvement.
1.4	Customer Satisfaction Survey	000	003	No significant changes to basic process, added commitment to management accountability. No reduction in commitments.

2.1	Quality System	006	012	Enhancements include: expanding scope of program requirements to include 10 CFR 50 Appendix B and NQA-1-1994 in accordance with NRC safety evaluation; further refinement of the QA Program process flow to assure verbatim compliance.
2.2	Quality System Procedures	008	015	Significant enhancements to the procedure, based, in part, on findings from NMC/Dominion Audit 2005-0106. Enhancements include: requirements for "effective date"; requirements regarding electronic versions of manuals and procedures; new requirement for flow down of QAM requirements to organization-specific documents (e.g., EDM, PPM); clarified personnel responsibilities regarding training, approval, etc.
2.3	Quality Planning	005	009	Same basic process with enhancements that add Project Quality Objectives to the procedure, as well as a requirement for Project Quality Plans for system integration projects (in accordance with PPMs).
3.0	Contract Review	007	011	Significant changes that address the types of orders: 1) hardware (standard product) purchase order, 2) application projects (system integration) purchase order, and 3) sales order. Defines the review process for each type of project, organizational responsibility, and the nexus to QA with regard to satisfying customer requirements. Adds Certificate of Compliance requirement for Class 1E orders.
4.0	Design Control	007	014	Enhancements include: 1) additional design control requirements from NQA-1, in accordance with the NRC safety evaluation, to the design process; 2) addition of nuclear application Project Procedure Manuals to list of procedures controlled by this section of QAM; 3) improved design process definition; and 4) improved organizational interfaces and design control responsibilities
5.1	Document and Data Control	009	015	Same basic process, enhancements include references to NQA-1, and incorporation of application project Project Procedure Manuals.
5.2	Document Approval and Issue	005	007	Same basic procedure, places control of documents under PPM 4.0. No reduction in commitments.
5.3	Document Changes	006	009	Same basic procedure, enhanced requirements regarding document approval authority. Places control of documents under PPM 4.0. No reduction in commitments.
6.0	Purchasing	011	020	Enhancements include requirements regarding safety-related Class 1E purchases, including use of an Approved Suppliers List/Nuclear Approved Suppliers List and Supplier Evaluations. Clarifies governing procedures for commercial-grade dedication for safety-related applications. Significantly enhances approved parts traceability, documentation control, and supplier analysis/approval.
7.0	Control of Customer Supplied Products	007	009	Same basic procedure, no reduction in commitments.
8.0	Product, Parts, and Materials Identification and Traceability	009	016	Enhancements include requirements for traceability of test firmware, use of electronic databases for identification and traceability, and incorporation of application project requirements (and associated Project Procedure Manuals) into the process described by this section.

9.0	Process Control	006	010	Same basic procedure, enhancements to work procedures applicable to electronic assemblies, enhancement to requirements regarding the work environment, additional requirements pertinent to special processes, and new requirements regarding process measurement. No reduction in commitments.
10.0	Inspection and Testing	010	017	Same basic procedure, with enhancements addressing application projects (Project Procedure Manuals), system acceptance testing, test procedures, and requirements for inspection involving nuclear safety-related Class 1E items (i.e., references to engineering procedures).
11.0	Control of Inspection, Measuring and Test Equipment	008	014	Same basic procedure, enhancements include tracking of organizational and personnel responsibility for instrument calibration, calibration requirements when working with a calibration supplier, and additional requirements regarding: 1) out-of-calibration equipment, 2) calibration records, and 3) calibration supplier audits.
12.0	Inspection and Test Status	007	012	Same basic procedure, updated to incorporate requirements for application projects and applicable Project Procedure Manual procedures. No reduction in commitments.
13.1	Control of Non-Conforming Product	007	011	Same basic procedure, updated to incorporate requirements for application project non-conformances (and applicable Project Procedure Manual procedures). No reduction in commitments.
13.2	Non-Conforming Product Review and Disposition	007	011	Procedure was updated to incorporate requirements for application project non-conformances (and applicable Project Procedure Manual procedures). Enhancements to responsibilities of the oversight board that reviews non-conformances, as well as requirements when non-conformances result from supplier programmatic deficiencies.
13.3	10CFR Part 21 Reporting of Defects and Noncompliance	001	007	Procedure was updated to incorporate 10 CFR Part 21 reporting requirements for application projects. Clarifies scope of the procedure to remove potential ambiguity regarding commercial grade dedication and application projects. Significantly enhances discussion of personnel and management responsibility, and clarifies the role of the oversight board that addresses and resolves 10 CFR Part 21 reporting issues. Significant improvements to definitions of terms pertinent to 10 CFR Part 21, and procedure used to determine NRC notification.
14.0	Corrective and Preventive Action	007	014	Procedure was updated to incorporate requirements for corrective and preventive actions with regard to application projects (and applicable Project Procedure Manual procedures). Enhancements to responsibilities of the oversight board that reviews corrective and preventive actions, as well as reporting mechanisms and closeout requirements. Adds reference to governing procedure containing requirements regarding 10 CFR Part 21 notifications.
15.0	Handling, Storage, Packaging, Preservation and Delivery	006	007	Same basic procedure, updated to incorporate requirements for application projects and applicable Project Procedure Manual procedures. No reduction in commitments.

16.0	Quality Records	009	015	Same basic procedure, updated to incorporate requirements for nuclear records as well as application projects and applicable Project Procedure Manual procedures. Adds requirements regarding electronic records handling, storage, and security. No reduction in commitments.
17.0	Audit Program	009	013	Same basic procedure, enhanced to better define both personnel responsibility and relationship to Quality Surveillances. No reduction in commitments.
18.0	Training	012	018	Significant modifications to the training program, including requirements for training planning, implementation, certification of expertise, and documentation. Enhancements ensure that employee and contractor competency, skills, training, and certification records are maintained as Quality Records.
19.0	Servicing	006	008	Significant procedural changes to the servicing program. Enhancements include better definition of customer support activities with regard to safety, responsibilities of customer support staff, training and certification of customer support staff, traceability of materials, documentation (e.g., discrepancy reporting, technical bulletins, material discrepancy reports), and customer training and support.
20.0	Statistical Techniques	006	008	Same basic procedure, with no reduction in commitments.

Table 2: Summary of Changes to Quality Procedure Manual procedures (2001-2006) a

1.3.4 Engineering/Software Development/Design Process Changes

Section 4.2 in the SER described the V9.5.3 Tricon PLC software design review and conclusions by the NRC. It was concluded in the SER that the Triconex software development processes were found to be acceptable and suitable for the development of high quality software suitable for use in safety-related applications in nuclear power plants, based on existing processes which included an independent organization to augment the product V&V activities. To confirm that Triconex development processes continue to be equivalent to (or better than) the processes reviewed as part of the V9 Qualification, a review was made of changes to engineering processes from the timeframe of the Tricon V9.5.3 qualification (2001) to the present (2009).

Product development processes and software development activities are controlled by procedures found in the Engineering Department Manual (EDM). All changes in engineering procedures since the 2001 timeframe were reviewed for any significant changes that may be construed to be a reduction in the rigor or effectiveness of development processes as previously reviewed. No reductions were found. To the contrary, an ongoing improvement in process rigor and procedure completeness is evident. Significant improvements in the quality and formality of the EDM procedures have taken place since the SER was issued for Tricon V9.5.3, with no basic changes to the design process flow and formality. This statement is based on the following:

1. **Evaluation of EDM procedure content confirming that essential control elements existing at the V9 timeframe continue to be part of the development process.**
   - A comparison of the current EDM Table of Contents with that from the V9 timeframe shows that all 39 of the original procedures continue to exist, with the exception of 2 administrative procedures (0.2 and 50.10). Changes to EDM procedures continued to be made to refine, but not change the intent or level of control of quality of the process. As examples, Table 4 lists several key procedures and provides descriptions of changes made since V9. Change histories for all EDM procedures are on file and available for audit to further confirm their content adequacy.

- EDM 12.00 is the primary procedure that defines the overall Triconex Product Development Process. This procedure provides the structure and flow of the process, including product lifecycle phases, and is supported by other detailed EDM procedures. A comparison of the current version of EDM 12.00 with the 2001 version shows that the same process elements, lifecycle phases, and design development control elements are still present, plus significantly greater detail and guidance. Further consistency with nuclear standards has been established, including current reference to IEEE 1012 for software V&V activities.

2. **Establishment of new EDM procedures to improve consistency with nuclear industry standards for software development and other design functions.**
   - Table 5 lists a number of significant new procedures that were added to the EDM since 2001. In general, additional procedures were developed to address maintenance of qualification for nuclear qualified products, dedication of commercial parts and services, and continuous improvement of design and V&V processes that support nuclear product design activities.

3. **Evolution of the Triconex process as a result of audits of the QA program, including product development activities.**
   - In 2001, the Triconex nuclear QA program was relatively new. Audits by nuclear customers (including NUPIC), internal audits, and NRC audits over the past 8 years have confirmed compliance with nuclear standards (including Appendix B, NQA-1) and have contributed significantly to ongoing improvements. Invensys Triconex is now a well-established nuclear company and has been providing safety control solutions to the nuclear industry for many years.

4. **Other independent evaluations documented in V10 Qualification project documents that describe the product hardware and software development processes and compliance with NRC standards, including**
   - 9600164-535, Software Qualification Report (SQR), section 5.0, et al.
   - 9600164-539, Critical Digital Review (CDR), sections 3.0, 3.1, 3.2.8, 4.1, 4.2, 4.5, 6.0.

Further review or audit of Triconex procedures, change history, and process implementation at the facility can provide further evidence of positive process evolution from 2001 to 2009.

a.

Table 4: Summary of Changes to Selected EDM Procedures (Though 2009)

Table 5: New EDM procedures added since 2001 (V9.5.3) timeframe (sampling)

a.

1.3.5 Review of Documents Credited in V9.5.3 SER BTP 7-14 Evaluations

In the SER, the elements of BTP 7-14 (NRC software guidance) were reviewed against documents that were transmitted to the NRC. The NRC ADAMS numbers for these reference documents were also listed in the SER. The V9.5.3 SER identified 11 elements of interest in BTP 7-14:

- Software Management Plan
- Software Development Plan
- Software Quality Assurance Plan
- Software Integration Plan
- Software Installation Plan
- Software Maintenance Plan
- Software Training Plan
- Software Operations Plan

- Software Safety Plan
- Software Verification & Validation Plan
- Software Configuration Management Plan

Several documents were referenced in the SER discussions (sections 4.2.2.1 through 4.2.2.11) in supporting the staff's conclusion that the software development and life cycle planning for the V9.5.3 Tricon PLC system is adequate for software intended for safety-related use in nuclear power plants. Documents identified in the SER included:

- V9.5.3 Software Qualification Report (SQR) (ML003733651)
- Triconex User Documents (ML003702538)
- Triconex Training Manual (ML003702538)
- QAM (Quality Assurance Manual) (ML010610188)
- Applicable TUV Report (ML012700039)

For V10.2.1, a review was performed to identify changes to these referenced V9.5.3 documents (or current equivalent) and to assess any potential impact on the V10.2.1 platform with respect to BTP 7-14 compliance.

Comparison with the current V10.2.1 version:

V9.5.3 Software Qualification Report (SQR):

For the V10.2.1 Qualification Project, a new SQR, document 9600164-535, was developed. Also, a CDR, document 9600164-539, was developed. The V10.2.1 SQR refers to the CDR for evaluation of compliance with BTP 7-14. In the V10.2.1 CDR, section 4.2 addresses the enhancements to the software development procedures and confirms that the current process is still adequate for software intended for safety-related use in nuclear power plants. Both the V10.2.1 SQR and V10.2.1 CDR are being provided to the NRC for review of software processes and areas of change.

Triconex User Documents:

Product Technical (User) Documents continue to be produced for each Tricon Version, to be used by the customer in implementing TRICON systems in their plant. V10.2.1 user documents are equivalent in format and content to the V9.5.3 user documents, and have merely been revised to reflect the specific characteristics of the V10.2.1 models.

Triconex Training Manual:

Section 4.2.2.7 of the SER discusses Software Training Plans, and Section 4.3.7 discusses Training as it relates to the V9.5.3 Tricon, including reference to the version of the Training Manual current at the time the SER was issued. The staff concluded that the training program was adequate for both Invensys personnel and users of the V9.5.3 Tricon. The current Triconex Training Manual (9750002-001) continues to define customer technical training courses in maintenance and application programming and is the equivalent of the Triconex Training Manual referenced in the V9.5.3 SER.

QAM and Applicable TUV Report:

Section 4.2.2.10 of the SER discussed in detail the Verification and Validation (V&V) activities conducted internally as well as the independent reviews by TÜV. V9.5.3 evaluation of BTP 7-14 V&V Planning referenced a combination of Triconex QA procedures, TÜV independent review and certification, and an external critical digital review of Triconex software. The V10.2.1 Qualification Project included a new, independent CDR (document 9600164-539), as mentioned above, which is being provided to the NRC for review. The CDR also discusses continual process improvements to the Appendix B program and procedures, including significant improvements to internal V&V planning and implementation. The Tricon V10.2.1 system has been certified by TÜV, similar to the V9.5.3 Tricon, and its report is available for review.

1.3.6 Qualification Process

Overall Qualification Process was as per EPRI 107330 requirements for both Tricon V9.5.3 and Tricon V10.2.1 systems. The following new reports for Tricon V10.2.1 (equivalent to V9.5.3 reports) were developed, reviewed, and released:

- 9600164-545, Rev 3 , Equipment Qualification Summary Report (EQSR)
- 9600164-539, Rev 1, Critical Digital Review (CDR)
- 9600164-535, Rev 1, Software Qualification Report, (SQR)
- 9600164-541, Rev 0, System Description
- 9600164-532, Rev 0, Reliability-Availability Study

Section 4.1.3 discusses the staff's review of the V9.5.3 Tricon environmental testing. For the V10.2.1 Tricon, EQSR sections 4.1 to 4.10 provide detailed discussion of qualification activities. Several of the test suites were changed to address contingencies identified by the NRC in the SER, such as temperature and humidity, and radiation hardness.

Tricon V9.5.3 System	**Tricon V10.2.1 System**
IEEE 323-1983	IEEE 323-2003
Low Humidity, limited due to test equipment	Low Humidity tested to TR-107330 requirements
Radiation qualification by analysis	Radiation qualification by test
EMC testing to TR-102323 **(Please see section 6.1 EMC tests differences between Tricon V9.5.3 and Tricon V10.2.1 Systems for details)**	EMC testing to R.G. 1.180 R1 (Please see section 6.1 EMC tests differences between Tricon V9.5.3 and Tricon V10.2.1 Systems for details)

Seismic envelope – 10G's	Seismic envelope – 14 G's
No electrostatic discharge testing	Electrostatic discharge testing performed to IEC 61000-4-2

1.4 References

The following documents were used as references in the development of this document:

- 9600164-545, Rev 3 (EQ Summary Report)
- 9600164-539, Rev 1 (TRICON V10_2_1 CDR)
- 9600164-535, Rev 1 (Software Qualification Report)
- 9600164-541, Rev 0 (System Description)
- 9600164-532, Rev 0 (Reliability-Availability Study)
- 9100041-001, rev 17, Triconex Nuclear Qualified Equipment List (Tricon v9 NQEL)
- 9100150-001, rev 6, Tricon v10 Nuclear Qualified Equipment List (Tricon v10 NQEL)

2.0 Main Processor Differences

The following sections provide detailed information about the Main Processor (MP) hardware and software differences between the Tricon V9.5.3 and the Tricon V10.2.1.

2.1 Main Processor Hardware Differences

SER Section 2.1.2 discusses the hardware in the Main Processor for the V9.5.3 Tricon. Since the time the SER was issued, the Main Processor has been updated. The EQSR for V10.2.1 Tricon describes in section 3.1.6 the updated Main Processor. The CDR describes in detail the upgrades to the Main Processor in sections 3.1.1 thru 3.1.5. The following table, based upon Table 3-1 in the CDR, details the hardware differences between the Tricon V9.5.3 Model 3006N Main Processor and the Tricon V10.2.1 Model 3008N Main Processor:

Tricon V9.5.3 Model 3006N MP	**Tricon V10.2.1 Model 3008N MP**
Three microprocessors for: ▪ **Application** (1) ▪ **Input/Output Modules** (2) ▪ **Communication Modules** (3)	Two microprocessors for: ▪ Application (1) ▪ Input, Output, and Communications Modules (2)
Hardware floating point processor	Embedded floating point software
Components are through-hole. Single-printed circuit board inside module is **covered in components.**	Components use Surface Mount Technology (SMT). Most of base-printed circuit board inside the module is empty, with limited circuits, connectors, and power conditioning. Most of MP functionality is on attached daughter card.
Application microprocessor **is 25 MHz 32-bit National Semiconductor 32GX32** (now **obsolete**).	Application microprocessor is 50 MHz 32-bit Freescale Semiconductor (was Motorola) MPC860EN microcontroller.
MP TSX program stored in 512 kilobyte (kb) **Programmable Read-Only Memory (PROM).**	MP ETSX program stored in 2 megabyte (MB) flash memory.
Firmware upgrade by PROM replacement.	Firmware upgrade via download through Ethernet port on MP front panel.
Control Program and Sequence of Events data stored in 2 MB **battery-backed, static random access memory (SRAM).**	Control Program and Sequence of Events data stored in 16 MB dynamic random access memory (DRAM) while running. Control Program is backed up in 4 MB flash memory. Any information that should be preserved during a power failure (such as control program retentive data and disabled point settings) is stored in 32 KB battery-backed, non-volatile random access memory (NVRAM).
MP watchdog timer is **set at 2.4 second timeout.**	MP watchdog timer is set at 0.512 second timeout.
TriClock used for MP rendezvous.	TriTime for MP rendezvous.

Tribus used for voting, 4 Megabits (Mb)**/second**	Tribus used for voting, 25 Mb/second.
Tricon **node address set in configuration**.	Tricon node address set on MP front panel and in application software configuration.
TSX Debug port on MP front panel.	ETSX and IOCCOM Debug ports on MP front panel.
Input/Output Module Controller (IOC) is NXP (was Phillips Semiconductor) 80C31, programmed in Assembly language.	Input, Output, and Communication Modules Controller (IOCCOM) is 50 MHz 32-bit Freescale Semiconductor MPC860EN.
Communication Module Controller (COM) is an Intel 80C152.	
IOC stored in 64 kilobyte PROM.	Combined IOCCOM program stored in 2 MB flash memory.
COM stored in 64 kilobyte PROM.	

The following figure illustrates the Tricon V10.2.1 Model 3008N Main Processor block diagram:

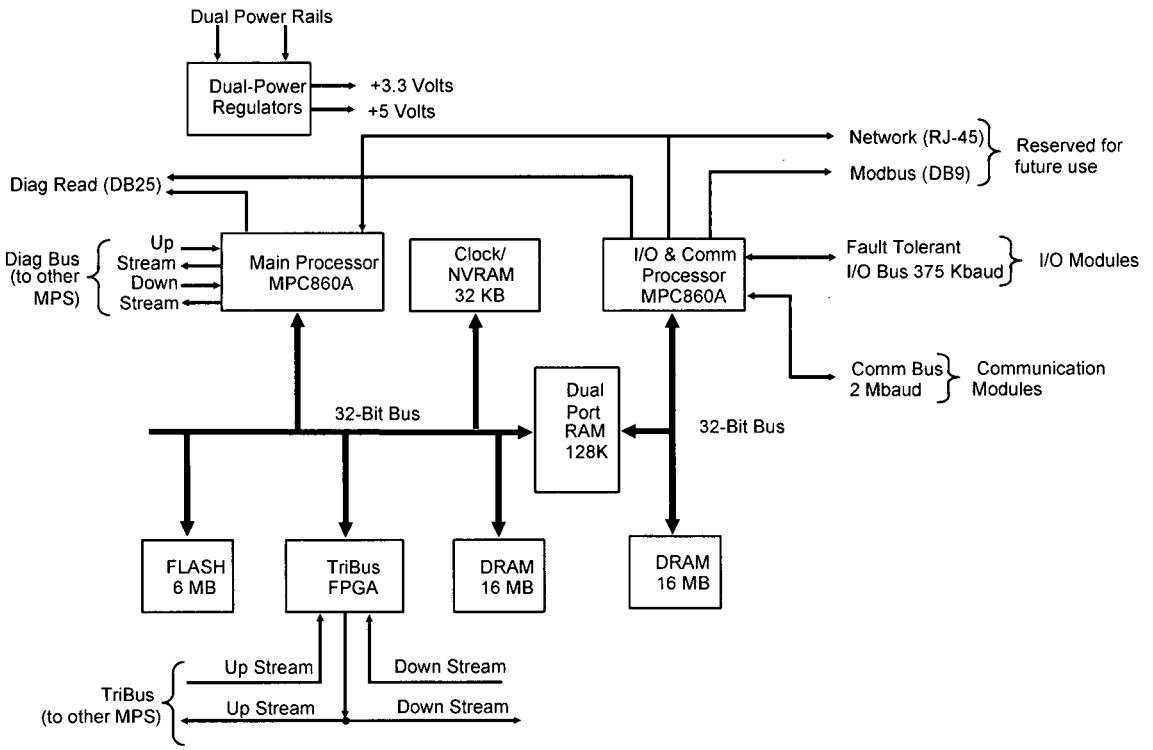

The following figure illustrates the Tricon V9.5.3 Model 3006N Main Processor block diagram:

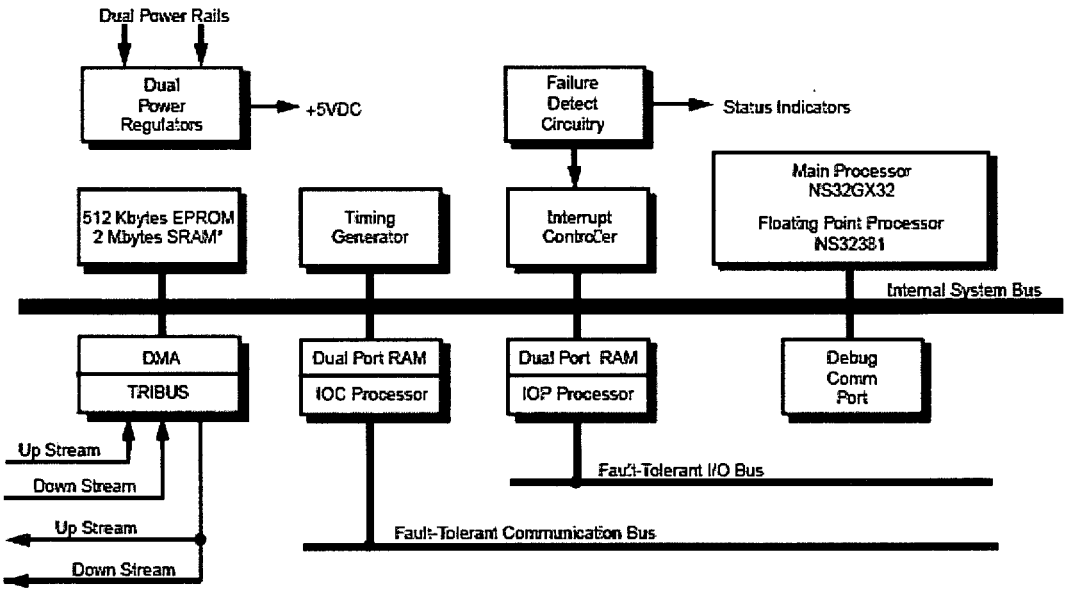

2.2 Main Processor Software Differences

SER Section 2.2.1 discusses the software in the Main Processor for the V9.5.3 Tricon. When the architecture of the Main Processor changed, as described above, the software was updated. The EQSR for V10.2.1 Tricon describes in section 3.2.1 the updated software for the Main Processor. The CDR describes in detail the upgrades to the Main Processor software in sections 3.1.6. The following sections detail the software differences between the Tricon V9.5.3 Model 3006N Main Processor and the Tricon V10.2.1 Model 3008N Main Processor.

2.2.1 Tricon V9.5.3 Model 3006N MP Software

The Tricon V9.5.3 Model 3006N MP has three separate sets of software (firmware) associated with three microprocessors:

- **Triconex System Executive (TSX)** – Runs on the application processor (NS32GX32). The TSX executes the application (also known as the *control program*) on a per-scan basis.
- **Input/Output Control (IOC)** – Runs on the I/O processor (NXP 80C31). The IOC manages the inputs/outputs to and from the I/O modules. The IOC interfaces to the TSX via shared memory (dual port RAM), and interfaces to the I/O modules via an RS 485 I/O bus.
- **Communication Modules Control (COM)** – Runs on the COM processor (Intel 80C152). The COM manages the incoming and outgoing messages to and from the communication modules. The COM interfaces to the TSX via shared memory (dual port RAM), and interfaces to the communication modules via an RS 485 I/O bus.

The following figure illustrates the hardware and software relationships for the Model 3006N MP:

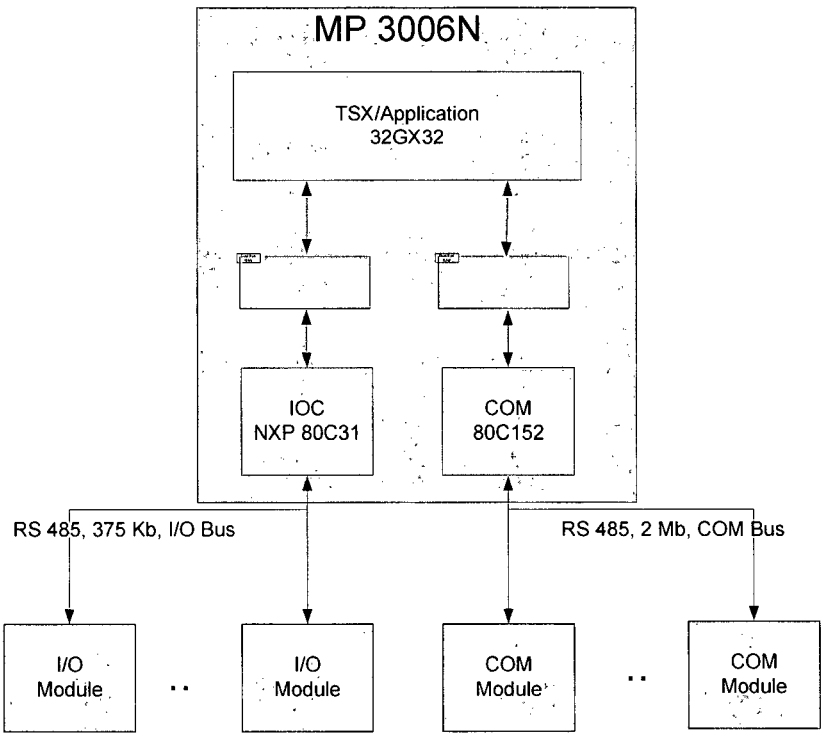

MP 3006N Hardware/Software Block Diagram
Tricon 9.5.x System

2.2.2 Tricon V10.2.1 Model 3008N MP Software

The Tricon V10.2.1 Model 3008N MP has two separate sets of software (firmware) associated with two microprocessors:

- **Enhanced Triconex System Executive (ETSX)** – Runs on the application processor (MPC 860A). The ETSX executes the application (also known as the *control program*) on a per-scan basis. The code base for the ETSX code was taken from TSX and LSX (the Laguna System Executive). The following figure illustrates the ancestry of ETSX (see section 3.1.6 of the CDR for details on the software history of the 3008N MP):

a, b

The IOCCOM manages the inputs/outputs to and from the I/O modules, and the incoming/outgoing messages to and from the communication modules. The IOCCOM interfaces to the ETSX via shared memory (dual port RAM), interfaces to the I/O modules via an RS 485 I/O bus, and interfaces to the communication modules via a separate RS 485 COM bus. There are dedicated communication channels between the MP and the TCM such that communication errors or external network events (such as data storms) will not affect the safety function.

The IOCCOM software uses no interrupts except for the watchdog. The I/O bus handling is always the highest priority. The COMBUS functions are performed while the I/O bus is waiting for a response.

The following figure illustrates the hardware and software relationships for the Model 3008N MP (see section 3.1.6 of the CDR for additional details on the IOCCOM software):

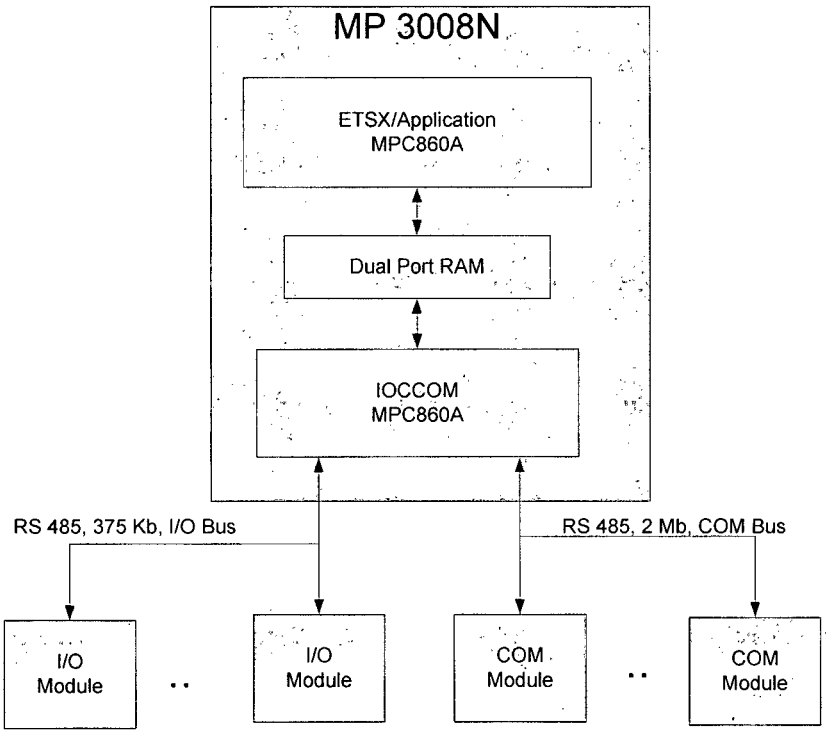

MP 3008N Hardware/Software Block Diagram
Tricon 9.6 and later Systems

2.2.3 Comparison of TSX and ETSX

The following table compares the Tricon V9.5.3 Model 3006N MP software (TSX) with the Tricon V10.2.1 Model 3008N software (ETSX):

Item	Tricon V9.5.3 Model 3006N MP (TSX)	Tricon V10.2.1 Model 3008N MP (ETSX)
Architecture	Basis for ETSX	The basis for ETSX is TSX. TSX was migrated from the 32GX32 processor to the MPC860A processor, and enhanced to support new communication modules and I/O modules. This is why ETSX architecture is very similar to TSX architecture.
Version	Version = TSX 5211	Version = ETSX 6198 (Build 92)
Processor Type	Runs on 32GX32 processor.	Runs on MPC860A processor.
Programming Language		
Application Programming Model & Development Workstation	TriStation 1131, v3.1	TriStation 1131, v4.1.437
Inter-Processor Interface	Tribus	Tribus
Shared Memory (Dual Port RAM) Interface	IOC (64K) COM (64K)	IOCCOM (128K)
Interface to I/O Modules	4-Wire RS-485	4-Wire RS-485
Interface to COM Modules	2-Wire RS-485	2-Wire RS-485
I/O Bus Protocol	375K Baud async	375K Baud async
COM Bus Protocol	2 MB HDLC	2 MB HDLC
External Host Interface Protocols	Modbus, TSAA	Modbus, TSAA

a, b

2.2.3.1 Differences between TSX and ETSX Subsystems

The following table describes the differences between the major subsystems of the Tricon V9.5.3 Model 3006N MP software (TSX) and the Tricon V10.2.1 Model 3008N software (ETSX):

a, b

2.2.4 Comparison of IOC and COM (Model 3006N MP) and IOCCOM (Model 3008N MP)

The following table compares the Tricon V9.5.3 Model 3006N MP software (IOC and COM) with the Tricon V10.2.1 Model 3008N software (IOCCOM):

Item	Tricon V9.5.3 Model 3006N MP (IOC and COM)	Tricon V10.2.1 Model 3008N MP (IOCCOM)
Architecture		
Version	Version = TSX 5211 IOC 5212 COM 5206	Version = IOCCOM 6054 (Build 92)
Processor Type	Two 8031s	Runs on MPC860A processor.

a, b

Item	Tricon V9.5.3 Model 3006N MP (IOC and COM)	Tricon V10.2.1 Model 3008N MP (IOCCOM)
Programming Language		
Shared Memory (Dual Port RAM) Interface	IOC (64K) COM (64K)	IOCCOM (128K)
Interface to I/O Modules	4-Wire R-485	4-Wire RS-485
Interface to COM Modules	2-Wire RS-485	2-Wire RS-485
I/O Bus Protocol	375K Baud async	375K Baud async
COM Bus Protocol	2 MB HDLC	2 MB HDLC

a, b

2.2.4.1 Differences between IOC / COM and IOCCOM Subsystems

The following table describes the differences between the major subsystems of the Tricon V9.5.3 Model 3006N MP software (IOC and COM) and the Tricon V10.2.1 Model 3008N software (IOCCOM):

a, b

3.0 I/O Modules

The following sections provide detailed information about the I/O Module hardware and software differences between the Tricon V9.5.3 and the Tricon V10.2.1.

3.1 I/O Module Hardware

Section 2.1.3 of the SER discusses the I/O module hardware for V9.5.3 Tricon. Since the time of issue of the SER, the Tricon I/O has been upgraded. In some cases the upgrades were improvements to existing boards (e.g., PI 3511N), in other cases the changes were more significant (e.g., conversion to surface mount technology). EQSR section 3.1.7 discusses V10.2.1 I/O module hardware, and section 3.3 lists the specific I/O modules that went through qualification testing for V10.2.1. It should be noted that the CDR discusses primarily the next-generation I/O (see section 3.2). The following sections detail the hardware differences between I/O Modules in the Tricon V9.5.3 and the Tricon V10.2.1.

3.1.1 Analog Input (AI) Modules

The following AI modules are the **same** for the Tricon V9.5.3 and Tricon V10.2.1:

- *3703EN – Isolated AI module (IAI)*
- *3708EN – Isolated Thermo Couple (ITC)*

The following modules from the Tricon V9.5.3 are **not included** in the Tricon V10.2.1:

- *3700AN – AI (0-5 VDC)*
- *3704EN – AI (0-5/0-10 VDC, High Density)*
- *3706AN – Non-isolated Thermo Couple (NITC)*
- *3510N – Pulse Input*

The following through-hole technology modules from the Tricon V9.5.3 have been **converted** to form-, fit-, and function-compatible Surface Mount Technology (SMT) modules, and qualified for the Tricon V10.2.1:

- *3701N2 – AI (0-10 VDC)*
  - The only changes required for conversion from the through-hole module to SMT module are the implementation changes:
    - A new PCB layout for the SMT module.
    - Use of SMT parts in place of through-hole parts.
  - This SMT module was reviewed and verified by TÜV (independent third-party).

The following modules (not in the Tricon V9.5.3) have been **added** to the Tricon V10.2.1:

- *3721N – AI (0-5 or -5 to +5 VDC, Differential); Next Generation Module, SMT*
  - This is a Next Generation AI module that uses the same basic TMR (Triple Modular Redundant) architecture of the previous I/O modules. The interface to the I/O bus and I/O protocol for communication to the MP is the same as previous I/O modules.
  - Each channel (leg) of the 3721N module has an ATMEL AT91R40008 ARM microcontroller and a Xilinx Spartan IIE 1.8V Field Programmable Gate Array (FPGA). Each channel has a separate 2 MB flash memory. The microprocessor's 16-bit bus connects to the FPGA and flash memory.
  - The 3721N AI module provides significant advantages over the previous AI modules for the Tricon V9.5.3:
    - A 10 msec scan rate for all the field inputs, compared to the 50 msec scan rate for all the field inputs of previous AI modules (such as the 3700AN).
    - Can be configured for unipolar input (0 to 5 VDC) or bipolar input (-5 to +5 VDC).
    - 14-bit resolution, versus the 12-bit resolution of previous AI modules.
  - The module performs the same types of checks and verifications across channels as the Tricon V9.5.3 AI modules.
  - This module replaces the following Tricon V9.5.3 modules:
    - 3700AN – AI (0-5 VDC)
    - 3704EN – AI (0-5/0-10 VDC, High Density)
  - CDR sections 3.2 and 3.2.1 discuss in detail the next generation I/O hardware. Also, see section 3.2.4, "Analog Input Customization"

- *3511N - Pulse Input*
  - The Model 3511N Pulse Input module features a faster input scan, providing a faster speed measurement capability for the V10.2.1 Tricon.
    - The worst case speed measurement update rate of the Model 3510 PI is 50 msec.
    - The PI 3511N measurement update rate is twice as fast as the 3510: 12.5 msec typical, 25 msec worst case.
  - The Model 3511N PI module is based upon the existing Model 3510N PI module hardware/software platform, with minor modifications. Specially, the internal reference frequency is changed from 1 MHz to 2 MHz, and the firmware

calculations scaled appropriately. Other than an improved update rate, none of the other published specifications are affected.

- This module replaces the Tricon V9.5.3 3510N module.

3.1.2 Analog Output (AO) Modules

The Tricon V9.5.3 *Model 3805EN (4-20 mA) Analog Output* module was modified to resolve the problem with high inductive loads connected to the output points during the periodic board switch. The problem details are presented below.

a, b

Both the AO modules (Model 3805EN and Model 3805HN) are form-, fit-, and function-compatible.

The Model 3805H module was included in the Tricon V10.2.1 qualification.

3.1.3 Digital Input (DI) Modules

The following through-hole technology modules from the Tricon v9.5.3 have been **converted** to form-, fit-, and function-compatible Surface Mount Technology (SMT) modules, and qualified for the Tricon V10.2.1:

- *Model 3501TN DI (115V AC/DC)* through-hole module converted to *Model 3501TN2 DI (115V AC/DC)* SMT module.
- *Model 3502EN DI (48V AC/DC)* through-hole module converted to *Model 3502EN2 DI (48V AC/DC)* SMT module.
- *Model 3503EN DI (24V AC/DC)* through-hole module converted to *Model 3503EN2 DI (24V AC/DC)* SMT module.

The only changes required for conversion from the through-hole module to SMT module are the implementation changes:

- A new PCB layout for the SMT module.
- Use of SMT parts in place of through-hole parts.

The SMT modules were reviewed and verified by TÜV (independent third-party).

The following modules from the Tricon V9.5.3 are **not included** in the Tricon V10.2.1:

- *3504EN DI (24/48 VDC)*
- *3505EN DI (24 VDC)*

3.1.4 Digital Output (DO) Modules

The following modules from the Tricon V9.5.3 are **not included** in the Tricon V10.2.1:

- *3604EN DO 24 VDC*
- *3624N DO 24 VDC, Supervised*

The following DO modules are the **same** for the Tricon V9.5.3 and Tricon V10.2.1:

- *3601TN DO 115 VAC*
- *3603TN DO 120 VDC*
- *3607EN DO 48 VDC*
- *3623TN DO 120 VDC, Supervised*
- *3636TN RO (Relay Output)*

The following module (not in the Tricon V9.5.3) has been **added** to the Tricon V10.2.1:

- *3625N DO (24 VDC, Supervised/Unsupervised), Next Generation SMT Module*
  - This is a Next Generation DO module that uses the same basic TMR (Triple Modular Redundant) architecture of the previous I/O modules.
  - The interface to the I/O bus and I/O protocol for communication to the MP is the same as previous I/O modules.
  - Each channel (leg) of the Model 3625N module has an ATMEL AT91R40008 ARM microcontroller and a Xilinx Spartan IIE 1.8V Field Programmable Gate Array (FPGA). Each channel has a separate 2 MB flash memory. The microprocessor's 16-bit bus connects to the FPGA and flash memory.
  - The Model 3625N DO module provides significant advantages over the previous Tricon V9.5.3 DO modules:
    - 32 output points, compared to 16 points for the old modules
    - Can be configured as supervised or unsupervised
  - This module replaces the following Tricon V9.5.3 modules:
    - *3604EN DO 24 VDC*
    - *3624N DO 24 VDC, Supervised*
  - CDR sections 3.2 and 3.2.1 discuss in detail the next generation I/O hardware. Also, see section 3.2.3, "Digital Output Customization"

3.1.5 Remote Extender Modules

Section 2.1.1.3 of the SER discusses Remote Extender modules for V9.5.3. See EQSR section 3.3 for a list of components that went through qualification testing for V10.2.1. The following Remote Extender modules from the Tricon V9.5.3 are **not included** in the Tricon V10.2.1:

- *4210N (Single Mode Fiber Optic cable) Primary Remote Extender module*
- *4211N (Single Mode Fiber Optic cable) Secondary Remote Extender module*

The following Remote Extender modules are **included** in the Tricon V10.2.1:

- *4200N (Multi Mode Fiber Optic cable) Primary Remote Extender module*
- *4201N (Multi Mode Fiber Optic cable) Secondary Remote Extender module*

3.1.6 I/O Module Term Panels

All Tricon v8 I/O module term panels were removed from the Tricon V10.2.1.

3.1.7 Signal Conditioners

The following Signal Conditioners are the **same** for the Tricon V9.5.3 and Tricon V10.2.1:

- Signal Conditioner (-100 to 100 °C) Pt (7B34-01-1)
- Signal Conditioner (0 to 100 °C) Pt (7B34-02-1)
- Signal Conditioner (0 to 200 °C) Pt (7B34-03-1)
- Signal Conditioner (0 to 600 °C) Pt (7B34-04-1)

The following Signal Conditioners have been **added** to the Tricon V10.2.1:

- Signal Conditioner (0 to 200 °C) Pt (7B34-CUSTOM)
- Signal Conditioner (0 to 600 °C) Pt (7B34-CUSTOM)
- Signal Conditioner (0 to 100 mV) (7B30-02-1)
- Signal Conditioner (0 to 120 °C) Cu (7B14-C-02-1)

3.2 I/O Module Software

SER section 2.2.1.2 discusses I/O module software for each module reviewed for V9.5.3. Since that time, the software for the I/O modules has been upgraded. EQSR section 3.1.7 discusses V10.2.1 I/O module software, and section 3.3 lists the specific I/O modules that went through qualification testing for V10.2.1. It should be noted that the CDR discusses primarily the next-generation I/O (see section 3.2). The following sections detail the software differences between I/O Modules in the Tricon V9.5.3 and the Tricon V10.2.1. Note that the tables below are based on the table in SER Section 2.2.1, "Safety-related Software," but with the addition of a column containing V10.2.1 software versions for comparison.

3.2.1 Analog Input (AI) Modules

The software for the AI modules common to both systems is the same.

AI Module	Tricon V9.5.3 Software version	Tricon V10.2.1 Software version
AI 3701N/N2	AI/NITC 4873	AI/NITC 5661
IAI 3703EN	EIAI/ITC 5491	EIAI/ITC 5916
ITC 3708EN	EIAI/ITC 5491	EIAI/ITC 5916
PI 3510N	PI 4559	Not Applicable
PI 3511N	Not Applicable	PI 5647
AI 3721N[1]	Not Applicable	AI 6200 (Build 92)

AI 3721N is a next-generation I/O module that not only provides significant enhancements in functionality, but also improve maintainability because it is built upon a common software "core". The software provides improved functionality, with common routines for actions performed by all the new I/O modules.

The software uses an FPGA to perform all interactions with the hardware. As a result, the microprocessor code does not have to deal with timing issues or other hardware issues, as these are hidden from the software in the FPGA logic, thus simplifying the software in each module. Rather, the microprocessor is presented with a common set of memory-mapped registers which provide a common interface to the inputs, outputs, communication channels, and the module itself. Both the HDLC communications protocol and the communications between the microprocessor channels on the module are handled by the FPGA, eliminating microprocessor software support requirements for both.

The core software consists of five tasks. The highest priority task is the Periodic Timer Interrupt Task. The MP Communication Interrupt Task is the second highest priority. The External Watchdog Interrupt Task is the third highest priority. The Foreground Interrupt Task is the fourth highest priority task, and the Background Task is the fifth and lowest priority task.

Each channel performs diagnostics on startup, which must complete successfully before the module channel is allowed to become operational. After startup, run-time diagnostics are performed periodically, normally in the background or foreground loop.

a, b

Module-specific software components have a defined interface. The interface between the core and the module-specific software components is specified in a Unified Modeling Language (UML) model developed using ARTiSAN tools. The core software supports data types for discrete, integer, and real data, and data quality for each point. The core software supports up to 64 points per module.

The software that coordinates messages to and from the MP ensures that the module does not respond to messages that are not addressed to it, using the chassis and slot data read from the Tricon backplane. The software checks for message corruption using a 16-bit CRC. Corrupt messages are ignored.

Using the timers, the software synchronizes with the other two channels, to ensure that data sampling is coordinated, which minimizes sampling-induced data variances. Synchronization is designed to ensure that failures in one or two channels do not result in loss of data.

Several different types of diagnostics are performed. As an example, the watchdog timer diagnostic coordinates with the other two channels, and only then does that channel allow its watchdog timer to time out. The module microprocessors verify the correct operation of outputs on an output module, and then the microprocessor restarts the process of strobing the watchdog. Watchdog timer strobes occur at least every 4096 microseconds, no more often than every 1024 microseconds, and avoiding the watchdog guard registers. Less frequent tests include walking data patterns through the RAM, verifying the RAM address lines, verifying the CRCs on flash memory blocks, verifying the FPGA version, and verifying the FPGA configuration data against the configuration data stored in flash memory.

3.2.2 Analog Output (AO) Modules

The software for the Model 3805EN AO module (Tricon V9.5.3) has gone through upgrades for incorporation into the Model 3805HN (Tricon V10.2.1). The version number for V10.2.1 of this software is EAO 5897.

3.2.3 Digital Input (DI) Modules

DI Module	Tricon V9.5.3 Software Version	Tricon V10.2.1 Software Version
DI 3501TN/TN2 **DI 3502EN /EN2** **DI 3503EN/EN2**	EDI 5490	EDI 5909
DI 3505EN	EDI 5490	Not Applicable
DI 3504EN **AI 3704EN**	HDI 5499	

3.2.4 Digital Output (DO) Modules

DO Module	Tricon V9.5.3 Software Version	Tricon V10.2.1 Software Version
DO 3625N[2]	Not Applicable	DO 6255 (Build 92)
DO 3601TN **DO 3607EN**	EDO 5488	EDO 5781
DO 3604EN	EDO 5488	Not Applicable
RO 3636TN	ERO 55497	ERO 5777
DO 3603TN	TSDO 5502	Same
DO 3623TN	TSDO 5502	TSDO2 5940
DO 3624N	TSDO 5502	Not Applicable

The software provides improved functionality, with common routines for actions performed by all the new I/O modules. Please refer to section 3.2.1 (3721N AI module) for a detailed description of next-generation I/O.

3.2.5 Remote Extender Modules

The software for the remote extender modules in both Tricon V9.5.3 and Tricon V10.2.1 is the same. The software version number is RXM 3310.

4.0 Communication Modules

Sections 2.1.4 and 2.2.1.3 of the SER discuss the communications modules hardware and software, respectively, for Tricon V9.5.3. Significant changes were made to the communications module for Tricon V10.2.1, as discussed in CDR section 3.3. The following sections provide detailed information about the communication processor hardware and software differences between the Tricon V9.5.3 and the Tricon V10.2.1. Extensive discussion on the results of an independent review of the Tricon V10.2.1 communications module is provided in CDR Appendices A and B.

a, b

4.1 Communication Module Hardware

As mentioned earlier, the Tricon V9.5.3 has three communication modules:

- 4119AN (EICM)
- 4329N (NCM)
- 4609N (ACM)

The new 4352AN (TCM) Fiber Optic module qualified in Tricon V10.2.1 replaces the functionality of the above three communication modules.

Module	Tricon V9.5.3	Tricon V10.2.1
Communication Module	Three modules: ▪ 4119AN (EICM) ▪ 4329N (NCM) ▪ 4609N (ACM)	One module: ▪ 4352AN (TCM) Fiber Optic

From the interface point of view, the TCM architecture is the same as the other communication modules. It uses the same RS-485 COM bus (triplicated), and the same COM protocol to communicate with the MPs. It communicates to external hosts (such as the TriStation 1131 workstation, MODBUS Master, DCS, other Tricon or Trident systems, etc.) using the 802.3 fiber optic interface or the serial interface. The new TCM uses the MPC8270 microprocessor and flash memory for software storage, while the previous communication modules used the 68020, 8031, and 8086 family of microprocessors and PROMs for software storage.

The TCM 4352AN and NCM 4329N basic block diagrams are provided on the following pages for comparison purposes:

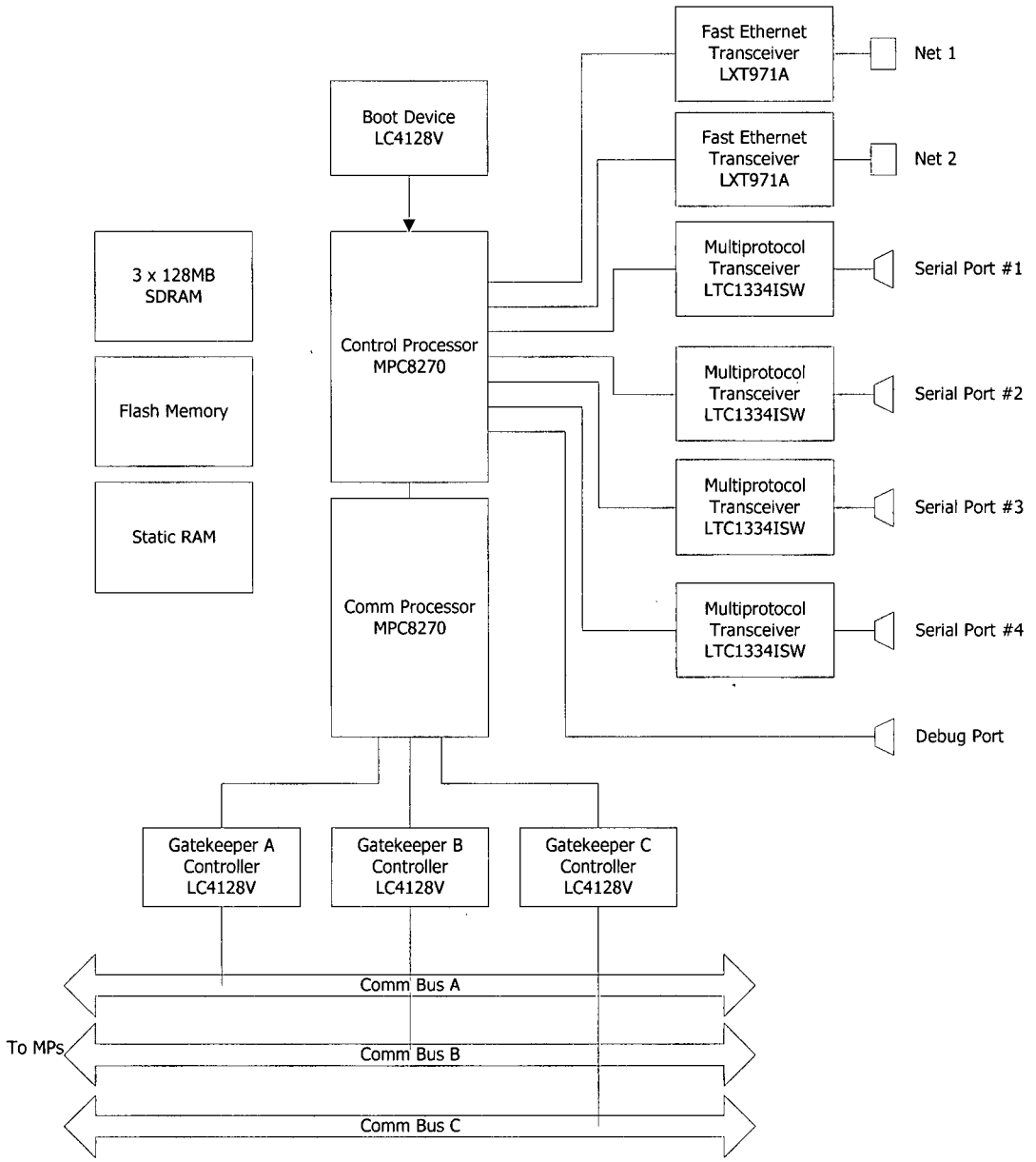

TCM 4352AN Block Diagram

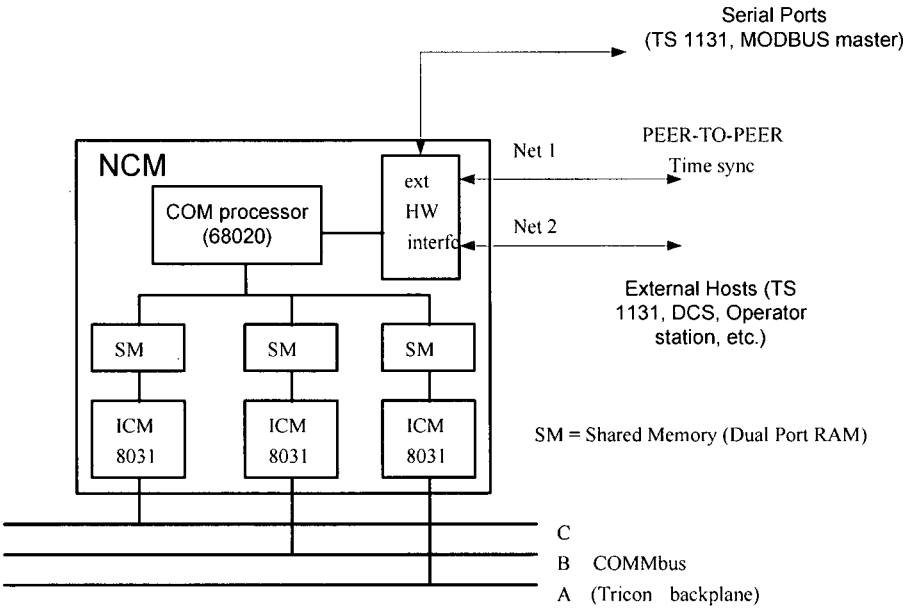

NCM 4329N Block Diagram

The TCM provides communication between the Tricon and the external world using any of the supported message protocols. The physical interface to the external world is comprised of the following ports:

- Two network ports designated NET 1 and NET 2. On the Model 4352AN TCM, these are fiber-optic ports. These are general-purpose Ethernet connections that can be used for printing, SNTP or GPS time synchronization, application-driven peer-to-peer or master-slave connections, Modbus, TSAA communication, or TriStation configuration.
- Four serial ports, which support Modbus, GPS time synchronization, or TriStation configuration. The serial ports may not be used with TriStation for nuclear applications.
- A debug port, intended solely for troubleshooting by the manufacturer, which interfaces with the control processor.
- The TCM internal physical interface to other Tricon components includes the following:
    - A communication bus that passes information between the TCM and the MPs. The interface is triplicated, and the TCM connects through the backplane to three separate, redundant bus channels, each associated with a single MP. Each connection passes through dedicated 'gatekeeper' circuitry. Before processing, the MPs vote to verify consistency of the received message, using the Tribus connections between the MPs.
    - Power input from the chassis backplane power rails.

- The internals of the TCM include the following:
  - Two programmable MPC8270 controllers. These function as a control processor, which interfaces with the external ports, and a communication processor, which interfaces with the Tricon Communication Bus channels. The communication processor is configured in slave mode; for example, the core is disabled and provides peripherals to the control processor.
  - Three programmable LC4128V chips that each function as a "gatekeeper" controller for one of the Tricon Communication Bus channels.
  - Two LXT971A fast Ethernet transceivers that support network ports NET 1 and NET 2.
  - Three LTC1334ISW multi-protocol transceivers that support Serial Ports 1 through 4.
  - Three SDRAM, two flash memory, and one static RAM integrated circuits.

In addition to these components, the TCM hardware includes external watchdog timer circuitry.

4.2 Communication Module Software

The TCM 4352AN uses VxWorks real-time OS as a base software and associated hardware support package, compared to VRTX real-time OS and associated hardware support package for the Tricon V9.5.3 communication modules (EICM 4119AN, NCM 4329N, ACM 4609N). All the communication module software supports the following application-level protocols:

- TriStation Serial
- TriStation Network
- MODBUS Serial
- Peer-to-Peer
- Tricon System Application Access (TSAA)
- Network Printer
- Time Synchronization
- Simple Network Time Protocol (SNTP)

The code for the above application-level protocols from the Tricon V9.5.3 communication modules was ported with minor changes (for example, OS services calls) to the TCM module.

In addition, the TCM supports the following two protocols:

- MODBUS TCP
  An updated version of the open-standard MODBUS serial protocol that allows MODBUS communications over Ethernet-based communication links.
- OPC

Checks on the validity of the data between the TCM and the Tricon safety core (MPs and I/O subsystem) are implemented on the MP, which discards any malformed data and votes on any messages (which are sent to each MP identically) over the Tribus prior to processing. Loss of the entire TCM subsystem does not affect the operation of the safety core (MPs and I/O subsystem).

The following table provides a comparison of the communication module software for the Tricon V9.5.3 and Tricon V10.2.1:

Module	Tricon V9.5.3	Tricon V10.2.1	
4352AN (TCM)	Not Applicable		a, b
4119AN (EICM)	Software version = ICM 4930, IICX 5276	Not Applicable	
4329N (NCM)		Not Applicable	a, b
4609N (ACM)	VRTX32 & TNX Real Time OS Software version = ICM 4930, ACMX 5203	Not Applicable	
Protocols	TCP (UDP)/IP	TCP (UDP)/IP	
	TriStation Serial	TriStation Serial	
	TriStation Network	TriStation Network	
	MODBUS Serial	MODBUS serial	
	-	MODBUS TCP	
	-	OPC	
	Peer-to-Peer	Peer-to-Peer	
	Tricon System Application Access (TSAA)	Tricon System Application Access (TSAA)	
	Network Printer	Network Printer	
	Time Synchronization	Time Synchronization	
	SNTP (Simple Network Time Protocol)	SNTP (Simple Network Time Protocol)	

5.0 TriStation 1131 Software

Section 2.2.3 of the SER discusses the TriStation 1131 software V3.1. Section 4.2.3 of the SER provides the staff's conclusion that the TriStation 1131 V3.1 software is acceptable to produce software that is intended for safety-related use in nuclear power plants. Since the SER was issued, TriStation 1131 software has been modified for maintenance as well as functional improvement. The current revision level is V4.1.437. Section 4.5.4 of the CDR describes the evolution of TriStation 1131 software. The major changes in TriStation 1131 V4.1.437 (Tricon V10.2.1) from TriStation 1131 V3.1 (Tricon V9.5.3) are:

- Automatic upgrade of projects (application/control program) created with the previous versions of TriStation 1131 (v2.x, v3.x, or v4.0) to TriStation 1131 v4.1
- Support for the new I/O modules (3625N DO, 3721N AI) and new communication modules (TCM models)
- New code generator, assembler, and linker for Model 3008N Main Processor
- API interface for automation of application development and testing
- Emulator enhancements for application testing in offline mode
- Bug fixes

The following table summarizes the changes from one version to the next:

a, b

a, b

Section 7.3 of the SQR documents the qualification activities regarding the TriStation 1131 software. Both the SQR and CDR affirm the acceptability of using TriStation to generate software intended for safety-related use in nuclear power plants.

6.0 Appendices

6.1 EMC Test differences between Tricon V9.5.3 and Tricon V10.2.1 systems

Version 9			Version 10		
Test Type	**Test Method**	**Frequency Range**		**Test Method**	**Frequency Range**
Conducted Emissions	CE101	30 Hz to 50 kHz	Conducted Emissions	CE101	30 Hz to 10 kHz
Conducted Emissions	CE102	50 kHz to 400 MHz	Conducted Emissions	CE102	10 kHz to 2 MHz
Radiated Emissions, Magnetic Field	RE101	30 Hz to 100 kHz	Radiated Emissions, Magnetic Field	RE101	30 Hz to 100 kHz
Radiated Emissions, Electric Field	RE102	10 kHz to 1 GHz	Radiated Emissions, Electric Field	RE102	2 MHz to 1 GHz
Conducted Susceptibility, Audio Frequency	CS101	30 Hz to 50 kHz	Conducted Susceptibility, Common-Mode Disturbances	IEC Standard 61000-4-16	15 Hz to 150 kHz
Conducted Susceptibility , High Frequency	CS114	50 kHz to 400 MHz	Conducted Susceptibility, Harmonics and Interharmonics	IEC Standard 61000-4-13	16 Hz to 2.4 kHz
			Conducted Susceptibility, Radio Frequency	IEC Standard 61000-4-6	150 kHz to 80 MHz
Radiated Susceptibility, Magnetic Field	RS101	30 Hz to 100 kHz	Radiated Susceptibility, Power Line Frequency	IEC Standard 61000-4-8	60 Hz
Radiated Susceptibility, Electric Field	RS103	10 kHz to 1 GHz	Radiated Susceptibility, Damped Oscillatory Magnetic Field, Helmholtz Coil Exposure	IEC Standard 61000-4-10	100 kHz and 1 MHz
			Radiated Susceptibility, High Frequency	IEC Standard 61000-4-3	26 MHz to 1 GHz

Version 9			Version 10		
			Radiated Susceptibility, Pulsed Magnetic Field, Helmholtz Coil Exposure	IEC Standard 61000-4-9	----
Conducted Susceptibility, EFT/Burst	IEC 801-4	2.5 to 5 kHz, 3 Hz Burst Rep. Rate	EFT	IEC Standard 61000-4-4	Power Leads, Level 3, Test Voltage Level: 2 kV max. Signal Leads, Level 3 Test Voltage Level: 1 kV max.
Surge Withstand	IEEE C62.41 IEC 801-5 IEC 801-5	Ring Wave Test, 3.0 kV Comb. Wave Test, 3.0 kV Ring Wave Test, 3.0 kV and 1.0 kV	Surge Withstand	IEC Standard 61000-4-12 61000-4-5	Ring Wave Test, 0.5, 1.0, and 2.0 kV Ring Wave Test, 0.5, 1.0, and 2.0 kV

6.2 V10.2.1 Software Change Development Trail

This Appendix provides traceability information for Tricon operating software (firmware) that changed from V9.5.3 to V10.2.1, as noted in section 1.3.2 of this report. For V10.2.1, twenty six (26) separate software modules of different types and revision levels were changed. Each individual SW module, in turn, has numerous documents supporting its development and release. Due to the evolutionary platform maintenance process, there is no single document that compiles all product changes into a comprehensive V10.2.1 document for design inputs or V&V activities. Recognizing the platform complexity and number of software module changes, this information matrix is provided to assist in the audit of documentation associated with V10.2.1 software and its relationship with the previously reviewed V9.5.3 software. A further overview of related V&V activities through V10.2.1 is provided in Appendix 6.3.

Table 1 identifies all V10.2.1 software types (identifier), the final V10.2.1 revision/meta number of each module, and reference to the parent hardware module in which the software is resident. The Bolded items are those types of software that have changed from the equivalent V9.5.3 software modules (i.e., 13 out of the 15 SW types have changed). For the SW modules that have changed, the table lists the Tricon Version that released that specific module revision, the date of the Release, and references to the key documents relating to that Release. Reference documents include the governing Software Release Definition, input documents/specifications, V&V Plan, and V&V Report. Key input documents are listed, but this is not necessarily a complete list, due to varying complexity of specific version changes. Engineering Project files provide a complete listing of the documents associated with the each platform release, including the software module changes, and provide a road map of document hierarchy.

Table 2 shows graphically the evolutionary development path of V10.2.1 from earlier versions to facilitate the review of the software history. This graphic provides the basis for tracing the applicable software versions that affected the final V10.2.1 software modules. For the 5 Major Releases (V9.6, V10.0, V10.1, V10.2, and V10.2.1), the primary release content is indicated in the table. The V10 Software Qualification Report (9600164-535), Figure 6-2, is the source of this "Development Tree," and has further detail on the development process. Each of the Tricon versions directly in the path from V9.5.3 to V10.2.1 is listed in Table 3 with pertinent information. Due to customer maintenance obligations, various commercial product versions continue to receive maintenance revisions that have no direct effect on the V10.2.1 development path that branched off earlier. Starting with V9.5.3, it can be seen that there are 15 version change steps in the path evolving to V10.2.1. These 15 versions are the basis for Table 3.

Table 3 shows the development and change history for the software modules that changed in V10.2.1. This includes new software developed for the V10.2.1 system as well as evolutionary changes to platform software that was previously reviewed as part of the V9 Tricon SER. Table 3 lists each of the evolving Tricon platform versions, from V9.5.3 down the development path to V10.2.1. Table 3 shows (in Bold) the point at which new or changed modules were introduced and released, and the relationship to previously reviewed software in V9.5.3. Software associated with the next generation V10 modules (MP, TCM, NGAI, NGDO) is considered new, although roots for the ETSX go back to V9 TSX, IOC, and COM software. More detail on the architecture and development path for these new modules is found in the Software Qualification Report (9600164-535) and the Critical Digital Review (9600164-539). While Table 1 specifically identifies key supporting documents for the final V10.2.1 software modules, the corresponding documents for other module revisions (along the development path) shown in Table 3 are on file in the Triconex Engineering department and available for audit.

a, b

Table 1: Software Change Matrix – Final V10.2.1 Software Module Reference

Table 2: Development Tree for New TRICON Software Versions

TRICON Version V6.0 through V9.4 (1985-1998)

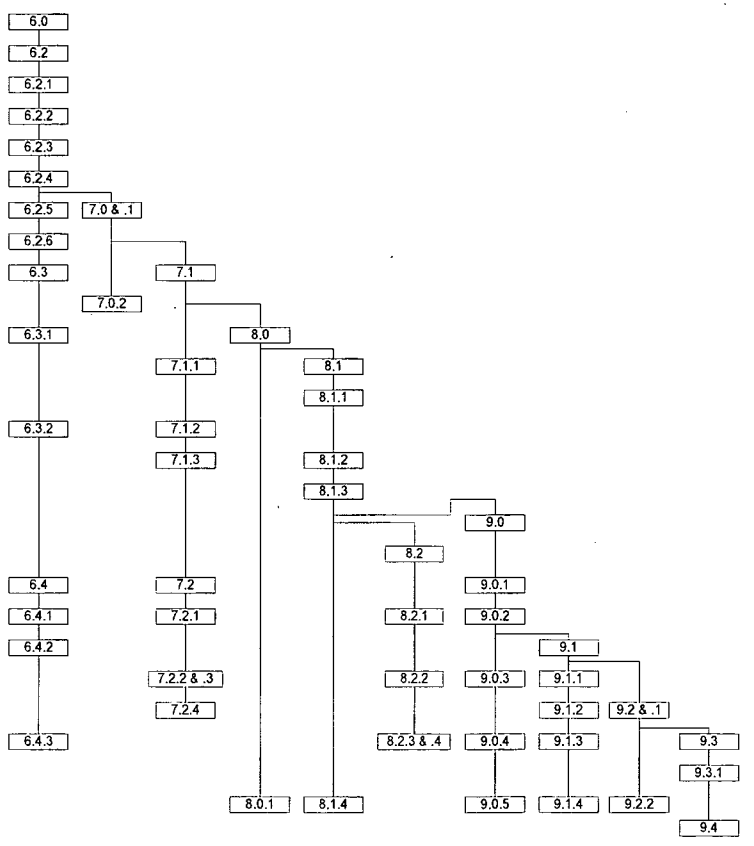

See next chart

Reference Software Qualification Report 9600164-535

TRICON Version 9.3.1 through 10.2.1 (1998-2006)
(Reflects Development Path from V9.5.3 to V10.2.1)

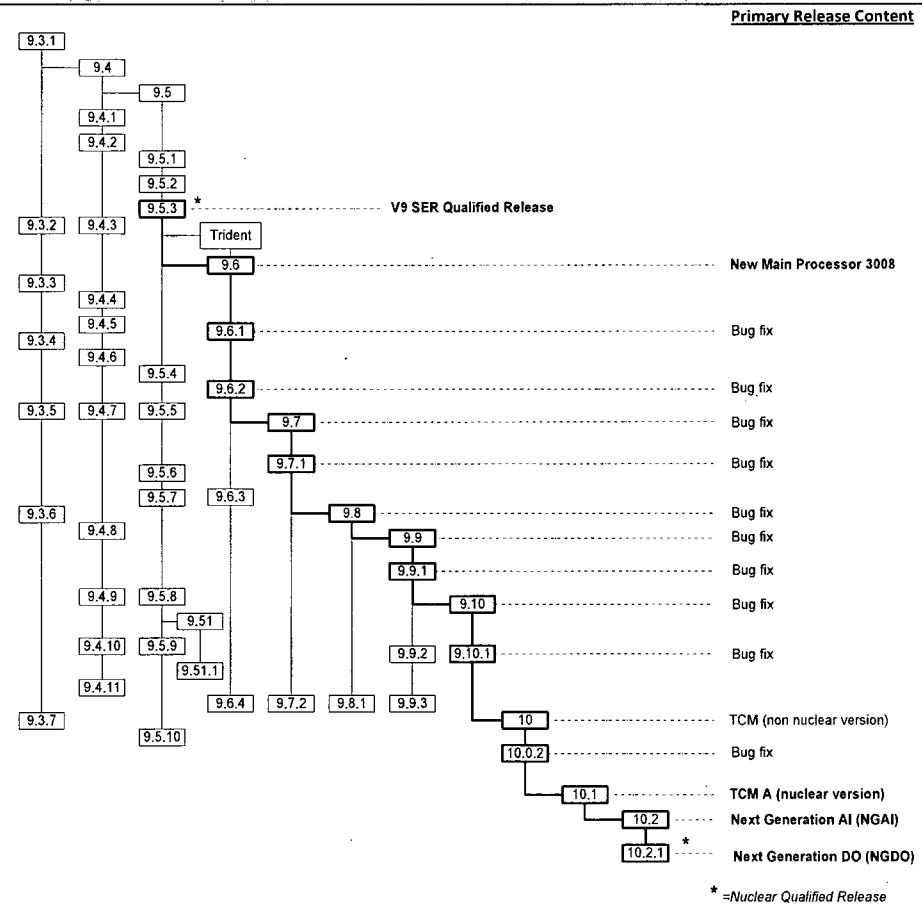

Table 3: V10.2.1 Software Module Development History – Evolutionary Changes and New

a, b

6.3 V&V Summary Report Tricon V9.6 – Tricon V10.2.1 Releases

This Appendix provides a summary report of all V&V activity for Major Revisions, and Maintenance releases since the Tricon V9.6 release. Since Tricon V9.5.3, several maintenance releases have been processed and added to the V9 Nuclear Qualified Equipment List (NQEL), specifically V9.5.6, V9.5.7, V9.51.1, V9.52, and V9.52.1. These V9.5.x upgrades were processed in accordance with Triconex Appendix B QA procedures and reflect the same V9 platform architecture depicted in the V9 SER. Applicable specifications, V&V records, and qualification upgrade evaluations are on file for these V9 upgrades.

Notwithstanding the "V9" designation, the Tricon V9.6 marked the beginning of the new "V10" architecture, adding the new Main Processor 3008N. Therefore, this table reflects a tabulation of primary V&V records for the V10 platform changes as described in this document.

This summary report includes **ALL** releases for the complete commercial Tricon product line. This summary report is **not** limited to product that is listed on the NQEL only. Tricon V10.2.1 was the platform version qualified during the V10 Qualification Project and is the only V10 version listed on the below table as being Nuclear qualified (and listed on the NQEL).

a

Table 1: V&V Summary Report Tricon V9.6 – Tricon V10.2.1 Releases

a, b

a, b

a, b

Table 2: Column legend

This table provides a brief description of the information provided in each column of Table 1 in this summary.

Column	Description
Major/Maintenance Release	Release identifier. Vx.y.z: x is the Major release number, y is the Revision number, and z is the Maintenance release number. (EDM 20.00)
Date	Date the Software Release Definition (SRD) was released.
Applicable V&V plans	Listing of the document number for the applicable V&V Plans.
Major Procedures executed	Listing of the major procedures that we executed as part of the formal Validation of the release.
Software release definition	The software Release Definition is the document that describes what is being released. It also contains information on compatibility, included bug fixes, and/or functional enhancements.
Release content summary	Major reason why the release was needed. This Column mostly refers to I/O Modules, Communication modules, Main Processor modules and their Firmware. See Table 3
V&V report	Pointer to the location of the V&V report. Historically V&V reports were kept in hardcopy only. Since V10.2 all reports are kept in electronic format only in our Synergy source control system database. The hardcopy is currently being scanned.

Table 3: Acronym Legend and Cross Reference

This table provides a cross reference between the Firmware acronyms (EEPROM) used in the release content summary column of table 1 and the actual Tricon Model number. Firmwares labeled "included in the build" are not in EEPROM. They are downloaded to Flash Memory. Model numbers ending with an N are included on the V10 NQEL.

Name / Description		Model#	Firmware Acronym	
			V9.5.3	V10.2.1
ACM	Advanced Comm. Module	4609N	ACMX	N/A
AI	0-10V DC	3701N, 3701N2	AI/NITC	AI/NITC
AI	0-5/0-10V DC	3703EN	EIAI/ITC	EIAI/ITC
AI	0-5V DC	3700AN	AI/NITC	N/A
AI	DC Coupled Thermocouple	3706AN	AI/NITC	N/A
AI	0-5/0-10V DC coupled, commoned	3704EN	HDI	N/A
AI	Isolated Thermocouple	3708EN	EIAI/ITC	EIAI/ITC

Name / Description		Model#	Firmware Acronym	
			V9.5.3	V10.2.1
AI	Differential Analog Input, 32 points	3721N	N/A	Included in the build
AO	4-20	3805EN, 3805HN	EAO	EAO
DI	115V AC/DC HiKV	3501TN, 3501TN2	EDI	EDI
DI	24/48V DC	3504EN	HDI	N/A
DI	24V AC/DC	3503EN, 3503EN2	EDI	EDI
DI	24V DC Low Threshold	3505EN	EDI	N/A
DI	48V AC/DC	3502EN, 3502EN2	EDI	EDI
DO	115V AC non Commoned	3601TN	EDO	EDO
DO	120V DC Supervised HiKV	3623TN	TSDO2	TSDO2
DO	120V DC Commoned HiKV	3603TN	TSDO	TSDO/HVDO
DO	24V DC non Commoned	3604EN	EDO	N/A
DO	24V DC Supervised	3624N	TSDO2	N/A
DO	48V DC non Commoned	3607EN	EDO	EDO
DO	24V DC Supervised, 32 points	3625, 3625N	N/A	DO
EICM	Enhanced Intelligent Communication Module	4119AN	ICM + IICX(A)	N/A
MP	EMP II	3006, 3006N		N/A
MP	EMP III	3008, 3008N	N/A	Included in the build: ETSX IOCCOM
NCM	Network Interface Module	4329N	ICM + NCMGX	N/A
PI	Pulse Input	3510N	PI	N/A
PI	Pulse Input	3511N	N/A	PI
RO	Dry Contact	3636TN	ERO	ERO
RXM	Primary Single Mode Fiber	4210N	RXM	N/A
RXM	Primary	4200N	N/A	RXM

Name / Description		Model#	Firmware Acronym	
			V9.5.3	V10.2.1
RXM	Remote Single Mode Fiber	4211N	RXM	N/A
RXM	Remote	4201N	N/A	RXM
TCM	Tricon Communication Module	4352AN	N/A	Included in the build; TCM

Table 4: Other Abbreviations used in table 1

Abbreviation	Meaning
CR	Change Request – a Synergy Database record
PDR	Product Discrepancy report – a Synergy database record
SCAO	Servo Controller Analog Output Module (bi-polar)
PAN	Product Alert Notice
TAB	Technical Advisory Bulletin
Bug	Generic term for a product discrepancy usually reported in a PDR/PER
PER	Product Enhancement Request – a Synergy database record.
NGIO	Next Generation I/O modules (AI 3721N and DO 3625N)