FINAL DATA REPORT REVISION 0
GEOTECHNICAL EXPLORATION AND TESTING

EXELON TEXAS COL PROJECT
VICTORIA COUNTY, TEXAS
SUPPLEMENTAL INVESTIGATION INCLUDING UHS

August 11, 2009

VOLUME 2

Prepared By:

MACTEC Engineering and Consulting, Inc.
Raleigh, North Carolina

MACTEC Project No. 6468-07-1777

Prepared For:

Bechtel Power Corporation
Subcontract No. 25352-102-HC4-CY00-00001

Contents

Appendix C – Cone Penetrometer Test Results
Appendix D – Geophysical Test Data

FINAL DATA REPORT REVISION 0
GEOTECHNICAL EXPLORATION AND TESTING

EXELON TEXAS COL PROJECT
VICTORIA COUNTY, TEXAS
SUPPLEMENTAL INVESTIGATION INCLUDING UHS

August 11, 2009

VOLUME 2
Appendix C – Cone Penetrometer Test Results

Prepared By:

MACTEC Engineering and Consulting, Inc.
Raleigh, North Carolina

MACTEC Project No. 6468-07-1777

Prepared For:

Bechtel Power Corporation
Subcontract No. 25352-102-HC4-CY00-00001

MACTEC

DOCUMENTATION OF TECHNICAL REVIEW
SUBCONTRACTOR WORK PRODUCT

Project Name: Exelon Texas COL Project – Supplemental Investigation, Including UHS

Project Number: 6468-07-1777

Project Manager: Scott Auger

Project Principal: Kathryn White

The report described below has been prepared by the named subcontractor retained in accordance with the MACTEC QAPD. The work and report have been reviewed by a MACTEC technically qualified person. Comments on the work or report, if any, have been satisfactorily addressed by the subcontractor. The attached report is approved in accordance with section QS-7 of MACTEC's QAPD.

The information and data contained in the attached report are hereby released by MACTEC for project use.

REPORT :

Fugro Cone Penetration Testing (CPT) at Exelon COL Project – Supplemental Investigation including UHS

SUBCONTRACTOR:

Fugro Consultants

DATE OF ACCEPTANCE : 8·11·09

TECHNICAL REVIEWER: Kathryn White

PROJECT PRINCIPAL: Kathryn A White

FUGRO CONSULTANTS, INC.

6105 Rookin Road
Houston, Texas 77074
Tel: 713-346-4000
Fax: 713-346-4002

July 21, 2009
Report Number 04.19090015

Mr. Scott Auger, P.E., PMP
MACTEC Engineering and Consulting, Inc.
3301 Atlantic Avenue
Raleigh, North Carolina 27604

REVISION 1
REPORT FOR
PIEZOCONE PENETRATION TESTING
AND RELATED SERVICES
EXELON TEXAS COL PROJECT– SUPPLEMENTAL INVESTIGATION, INCLUDING UHS
VICTORIA, TEXAS
MACTEC PROJECT # 6468-07-1777

Dear Mr. Auger:

Fugro Consultants, Inc. is pleased to enclose the data report for Cone Penetration Testing (CPT) at Exelon Texas COL Project – Supplemental Investigation, including UHS, Victoria, Texas. Cone Penetration Tests were carried out according to ASTM-D5778-2007, "Performing Electronic Friction Cone and Piezocone Penetration Testing of Soils" standard test method.

For your information, the soil stratigraphy was identified using Campanella and Robertson's Simplified Soil Behavior Chart. Please note that because of the empirical nature of the soil behavior chart, the soil identification should be verified locally. Some soils, such as glacial till, cemented soils and calcareous soils are outside the scope of these soil behavior charts.

Cone Penetration Test data was collected utilizing Fugro's digital cone penetrometer systems that were mounted on 20-ton capacity ATV track-mounted Cone Penetration unit.

The Fugro Organization has been developing and deploying Cone Penetration Testing (CPT) systems since the early 1940's. We currently own and operate over 600 onshore and offshore cone deployment systems worldwide. Fugro developed the first commercial cone penetrometer in the 1960's and has manufactured and utilized the industry standard in electronic cone penetrometers since that time.

The following sections summarize CPT test method and our site investigation activities:

1.0 Summary of CPT Test Method

A penetrometer assembly with a conical point having a 60° apex angle and a cone base area of 10 cm^2 or 15 cm^2 is advanced through the soil at a constant rate of 2 centimeters per second. The force on the conical point (cone) required to penetrate the soil is measured by strain gages at a minimum of every 2 centimeters of penetration. Stress is calculated by dividing the measured force (total cone force) by the cone base area to obtain cone resistance, q_c.

TOTAL PAGES IN DOCUMENT: 49

A friction sleeve is present on the penetrometer immediately behind the cone tip, and the force exerted on the friction sleeve is measured by strain gages attached to load cells at the top and bottom of the sleeve assembly, at a minimum of every 2 cm of penetration. Stress is calculated by dividing the measured force by the surface area of the friction sleeve to determine friction sleeve resistance, f_s.

Many penetrometers are capable of measuring dynamic pore pressure induced during advancement of the penetrometer tip using an internal pressure transducer. These penetrometers are called "piezocones." The piezocone is advanced at a rate of 2 centimeters per second, and readings are taken at a minimum of every 2 centimeters of penetration. The dissipation of excess pore pressure can be monitored by stopping penetration, unloading the push rod, and recording pore pressure as a function of time. When pore pressure becomes constant, it is measuring the equilibrium value or piezometric head at that depth.

Penetrometers are also available with geophones mounted above the friction sleeve for measuring shear wave velocity. These penetrometers are called "seismic cones." The seismic cone is advanced at a rate of 2 centimeters per second, and readings taken at a minimum of every 2 centimeters of penetration. Advancement of the seismic cone is stopped at predetermined intervals (usually 5 or 10 feet). At these intervals shear wave velocity measurements are recorded using a seismograph. Placing a metal beam on the ground and striking the ends of the beam with a hammer generate the shear waves.

2.0 Significance and Use

Tests performed using CPT methods provide a detailed record of penetrometer results, which are used for the evaluation of site stratigraphy, homogeneity and depth to firm layers, voids or cavities, other discontinuities, and correlations with geotechnical and hydrogeological properties of soils. When properly performed at suitable sites, the test provides a rapid means for determining subsurface conditions.

CPT methods provide data used for estimating engineering properties of soil intended to help with the design and construction of earthworks, foundations for structures, and the behavior of soils under static and dynamic loads.

CPT methods test the soil in situ and soil samples are not obtained. The interpretation of the results from the test methods provides estimates of the types of soil penetrated. Engineers may obtain soil samples from parallel borings for correlation purposes since the results of these tests are empirical in nature and yield results regarded as behavior type but not actual grain size.

3.0 Limitations of Use

Refusal, deflection, or damage to the penetrometer assembly may occur in coarse-grained soil deposits with maximum particle sizes that approach or exceed the diameter of the cone. Partially lithified and/or cemented deposits may cause refusal, deflection, or damage to the penetrometer assembly.

Standard push rods can be damaged or broken under extreme load conditions. The amount of force that push rods are able to sustain is a function of the unrestrained length of the push rods and the weak links in the push rod-penetrometer tip string, such as push rod joints and push rod-penetrometer assembly connections. The force at which rods may break is a function of the equipment configuration and ground conditions during penetration. Excessive rod deflection is the most common cause for rod breakage during deep pushes in dense material with soft overlying soil.

4.0 Equipment

Equipment utilized in conducting Cone Penetrometer Testing include:

1. Digital Standard Cone (CPT) to measure tip and sleeve resistances and probe inclination
2. Digital Piezocone (CPTu) to measure tip and sleeve resistances, probe inclination and dynamic pore pressure
3. Cone rods with pre strung electrical cone cable.
4. Digital Data Acquisition System including the Digital Connection Box (PCUM), a data logging laptop computer and laser printer.
5. A self-contained CPT rig that contains the hydraulic pushing system, a power supply unit and other tools, equipment and materials necessary

Digital Piezocone (CPTu) testing was done during this investigation.

4.1 Electric Cone Penetrometers

Fugro Consultants, Inc. utilizes electric cone penetrometers, available in either a $10cm^2$ or $15cm^2$ cone base area that exceed the standards set forth by ASTM-D5778-2007, ISO 9001 and ISSMGE Technical Committee 16. Technical details and specifications of Fugro's Cone Penetrometers are given in Appendix A.

4.2 Cone Rods

Fugro's CPT cone rods are manufactured from high tensile strength steel and have a cross sectional area adequate to sustain, without buckling, the thrust required to advance the penetrometer tip. Prior to testing, an electrical cone cable is prestrung through the cone rods and is connected by a crossover cable to the Data Acquisition System.

Push rods are supplied in 1- meter lengths and must be secured together to bear against each other at the joints to form a rigid-jointed string. The deviation of push rod alignment from a straight axis should be held to a minimum, especially in the push rods near the penetrometer tip, to avoid excessive directional penetrometer drift.

Generally, when a 1-m long push rod is subjected to a permanent circular bending resulting in 1 to 2 millimeter (mm) of center axis rod shortening, the push rod should be discarded. This corresponds to a horizontal deflection of 2 to 3 mm at the center of bending. The locations of push rods in the string should be varied periodically to avoid permanent curvature.

Standard 20-metric ton high tensile strength steel push rods with 36-mm OD, 16-mm ID, and a mass per unit length of 6.65 kg/m are used.

4.3 Data Acquisition System

The. digital data acquisition system utilized by Fugro in conducting CPT Testing consists of a PCUM, a portable laptop computer, and a printer.

The digital data acquisition system collects the cone penetrometer's digital signal, which is monitored, recorded and presented in near-real time on the laptop computer.

Information collected during a push is stored digitally as binary data on computer's hard disk and transferred to compact disks. Windows-based programs read the data and convert it to text files. The data files include project description and location, operator, data format information and other pertinent information about the sounding.

Following each push, data collected with a standard CPT cone are presented in a graphical format. The log includes:

1. Cone resistance plot in tons/ft^2 (TSF),
2. Friction sleeve resistance plot in tons/ft.^{2} (TSF),
3. Friction ratio plot in %

Versus depth below ground surface in feet.

For data collected with a piezocone, the log includes, in addition to the above, an additional plot of pore pressure in tons/ft^2 (TSF), versus depth in feet.

A variety of plotting parameters are available for uniform presentation of data. As stipulated in the ASTM standard, the vertical axis is designated for the depth while the horizontal axis displays the magnitude of the test values recorded. Final plotting scales are determined after all the tests are completed, and takes into consideration test values and depths recorded for the project.

4.4 CPT Rig

A primary component of any CPT system is the CPT rig. Fugro Houston currently owns and operates ten (10) truck mounted CPT units, four (4) ATV-mounted units, and two (2) skid mounted units. The CPT rigs have self contained electrical, hydraulic, and climate control systems and range in weight from 15 to 30 tons. Except for the skid-mounted units, the rigs have hydraulic jacking systems to lift and level the pushing platform. The "dead weight" of the rigs provides the reaction weight necessary for advancing the CPT tools, eliminating the need for time-consuming earth anchoring. Fugro's typical purpose build CPT rigs are shown in Appendix B.

5.0 Calibration

Fugro's cone penetrometer manufacturing and calibration procedures include ISO 9001, ASTM-D5778-2007, and European cone penetration standards. The calibration tests include load testing over the full range of output for each cone. Cones are tested and calibrated for the following:

- Mechanical Calibration
- Cross-talk Check
- Dimension Check
- Seal / O-Ring Check
- Electronic Calibration

- Temperature Effect
- Pre and Post Test Voltage Readings (zeros)
- Full Scale Output Load Reading
- Pore Pressure effect on tip and friction readings
- Pore Pressure Transducer calibration

Fugro's cone penetrometer calibration zeros are checked and verified before and after each sounding. Periodic full-scale calibration is likewise conducted according to the Quality Assurance and Quality Control procedures as specified in ASTM-D5778-2007.

During this investigation, utilized cone penetrometers were load range checked and calibration verified before and after the project. Calibration Verifications are documented in Appendix C.

6.0 Test Procedure

Prior to beginning a sounding, a site survey is performed to ensure hazards such as underground utilities will not be encountered. The rig is positioned over the location of the sounding and the leveling jacks are lowered to raise the machine mass off the rig's suspension system. The hydraulic rams of the penetrometer thrust system are set to as near vertical as possible by adjusting the leveling jacks. Once the rig is set level, the data acquisition system is powered up, and standard Fugro CPT checklist procedures are followed.

During this investigation, for each CPT test initial and final zero readings were recorded and included in Appendix C. In addition to standard cone penetrometer check list during Piezocone penetration testing the following procedures are followed:

1. Assemble the piezo elements with all fluid chambers submerged in the de-aired medium used to prepare the elements. Flush all confined areas with fluid to remove air bubbles. Tighten the cone tip to effectively seal the flat surfaces and apply vacuum pressure to piezo tip section.

2. If unsaturated soil is first penetrated and it is desired to obtain accurate dynamic pore pressure response once below the ground water, it may be necessary to prebore or sound a pilot hole to the water table. In many cases the piezocone fluid system may be cavitated during penetration through unsaturated soil or in dilating sand layers below the water table, which can adversely affect dynamic response.

The CPT rig was placed over the location and leveled with leveling jacks. After insuring the cone was cleaned and the seals were in place, the cone was prepared as in step 1 above. The cone was then suspended over the location and lowered until the tip was above the ground surface, but not in contact with it.

Labels were entered into the computer to identify the CPT sounding and location. The test was then started on the computer. After starting the test software the operator waits for 30 seconds to allow the system to collect zero readings before lowering the cone to the ground surface and advancing the penetrometer into the soil.

The penetrometer is pushed into the soil at a rate of 2 cm per second. A shaft encoder that is connected to the cone rod using a slip ring plate measures depth. A steel cable is attached to slip ring plate. The cable is then routed over a pulley then attached to a spring-loaded wheel on the shaft encoder. As the cone rod penetrates the soil the cable turns the wheel on the encoder and counts the depth.

The readings from the penetrometer and encoder are sent to the computer, which displays the data graphically, and numerically on screen in real time. The raw data is also stored on the computer hard

drive. After the desired depth or refusal is reached, the penetrometer and cone rod are pulled from the ground. When the penetrometer is hanging free above the ground, post test zero readings are recorded and the data stored.

CPT soundings may encounter refusal prior to reaching the desired depth for several reasons. These reasons include:

- The CPT rig cannot generate enough downward force to continue penetration.
- The CPT rig is lifting off the ground while pushing.
- The slope of the penetrometer exceeds angle limits.
- There is not enough lateral support from the soil to prevent the cone rod from bowing and breaking as it is advanced. Casing can help in this situation, however it is not always possible to advance casing to the depth required.

If refusal is due to slope the operator will terminate the sounding and determine the cause. The test will also be terminated if there is a problem with the data observed during the test. After correcting the problem, the operator will move over and re-push the test.

7.0 Quality Assurance and Quality Control

As part of Fugro's QA procedures, when a digital data acquisition system is activated, the serial number, calibration values for each channel, calibration date and calibration due dates will automatically be recorded in each CPT test file along with the initial and final zero readings of the cone penetrometer.

Upon completion of a project, the field data is transmitted electronically or by overnight mail to the main office in Houston, Texas, where it is processed, reviewed and finalized. The original, unprocessed data is stored in a large capacity, limited access storage medium where it is kept indefinitely for future reference as confidential records.

The integrity of the measurements are checked and verified to ensure that the logs generated are as accurate as possible. Rod spikes, which are generated naturally when the pushing is stopped to add rods while advancing the sounding, are identified and edited out.

Prior to the release of the Final Report, a Senior Staff member reviews the entire set of data. In this process, the reviewer conducts a thorough assessment of the data set checking its consistency and accuracy. Should any deviation beyond Fugro's accepted standards occur, the data is rejected and test is redone at Fugro's expense.

8.0 Summary of Testing performed on this project

The table below is a summary of testing done for this project. All CPT testing were completed using Fugro's Digital Cone Penetrometer system. A 15 cm^2 piezocone was used for all locations.

CPT	Date	Depth
C-3101	03/06/2009	74.87
C-3102	03/06/2009	95.14
C-3110	03/06/2009	77.1
C-3201	03/05/2009	109.25
C-3204	03/04/2009	87.07
C-3205	03/05/2009	95.73
C-3206	03/04/2009	62.34

C-3207	03/06/2009	77.3
C-3208	03/05/2009	90.75
C-3209	03/04/2009	85.37
C-3211	03/04/2009	85.43
C-3212	03/05/2009	90.94

Fugro Consultants, Inc. appreciates the opportunity to be of service to MACTEC Engineering and Consulting, Inc. If you have any questions, please feel free to contact me at 713-346-4000.

Very truly yours,
FUGRO CONSULTANTS, INC.

Recep Yilmaz
Senior Vice President

12 Zone Soil Behavior Chart

Classification Data:
Robertson and Campanella UBC-1986

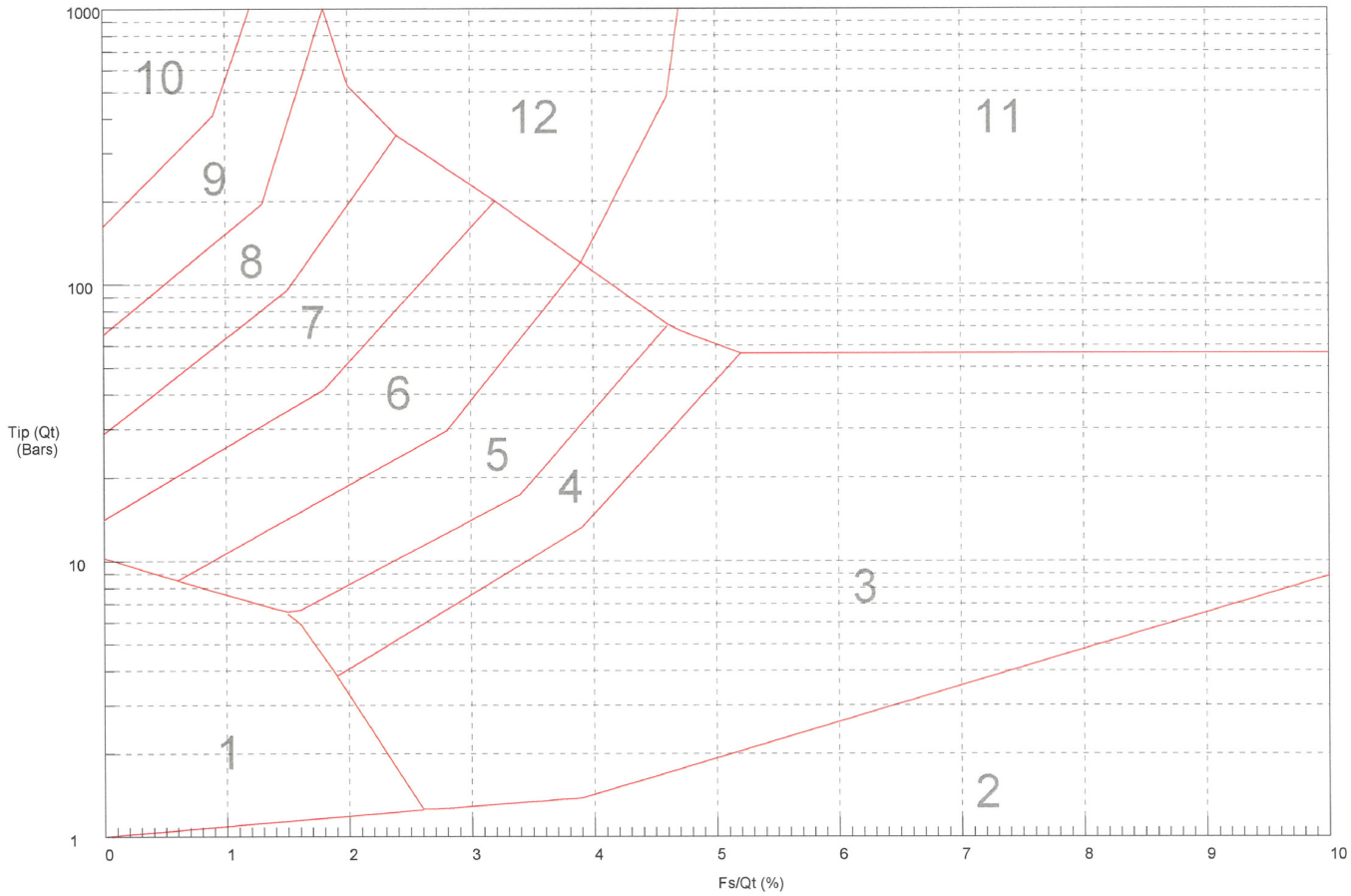

1 sensitive fine grained
2 organic material
3 clay
4 silty clay to clay
5 clayey silt to silty clay
6 sandy silt to clayey silt
7 silty sand to sandy silt
8 sand to silty sand
9 sand
10 gravelly sand to sand
11 very stiff fine grained (*)
12 sand to clayey sand (*)

* Overconsolidated or cemented

APPENDIX A

FUGRO'S CONE PENETROMETER

APPENDIX A

FUGRO PENETROMETER TIPS DATA - TYPES FCKE

SPECIFICATIONS LOADCELLS		F5CKE	F10CKE	F7.5CKE & F15CKE
CONE LOADCELL				
Base Area	cm^2	10	10	15
Apex Angle	DEG	60	60	60
Full Range	kN	50	100	150
Load Limit	kN	100	100	200
Effect of 10 bar water pressure	N	450	450	880
Output at zero load	mV	< ± 0.5	< ± 0.5	< ± 0.5
Full range output (FRO)	mV	10	10	10
Input resistance	ohm ca.	270	270	270
Output resistance	ohm ca.	240	240	240
Non linearity and hysteresis	%FRO	< 0.1	< 0.1	< 0.1
Calibration accuracy	%FRO	< 0.5	< 0.5	< 0.5
Rated bridge supply voltage	Volt	10	10	10
Maximum bridge supply voltage	Volt	15	15	15
Thermal zero shift	%FRO/10^0C	< 0.2	< 0.2	< 0.2
Thermal Sensitivity shift	%FRO/10^0C	< 0.1	< 0.1	< 0.1
Repeatability	%FRO	< 0.1	< 0.1	< 0.1
SLEEVE + CONE LOADCELL				
Sleeve Area	cm^2	150	150	200
Full Range	kN	50	100	150
Load Limit	kN	100	100	200
Effect of 10 bar water pressure	N	300	300	280
Output at zero load	mV	< ± 0.5	< ± 0.5	< ± 0.5
Full range output	mV	10	10	10
Input resistance	ohm ca.	270	270	270
Output resistance	ohm ca.	240	240	240
Non linearity and hysteresis	%FRO	< 0.1	< 0.1	< 0.1
Calibration accuracy	%FRO	< 0.5	< 0.5	< 0.5
Rated bridge supply voltage	Volt	10	10	10
Maximum bridge supply voltage	Volt	15	15	15
Thermal zero shift	%FRO/10^0C	< 0.2	< 0.2	< 0.2
Thermal Sensitivity shift	%FRO/10^0C	< 0.1	< 0.1	< 0.1
Repeatability	%FRO	< 0.1	< 0.1	< 0.1
GENERAL				
Friction output at full range load of cone	%FRO	< 2		
Compensated temperature range	^{0}C	- 10 to + 40		
Maximum temperature	^{0}C	80		
Insulation resistance	10^8 ohm	> 5		
Slope sensor built-in		on request		

NOTES: The friction sleeve is located immediately above the cone.
Standard delivery includes: cone, calibration sheet, and connector tube.
The accuracy during field use will depend on: field calibrations, treatment during testing, readout equipment, abrasion and maintenance.

TYPE F7.5CKEW/V

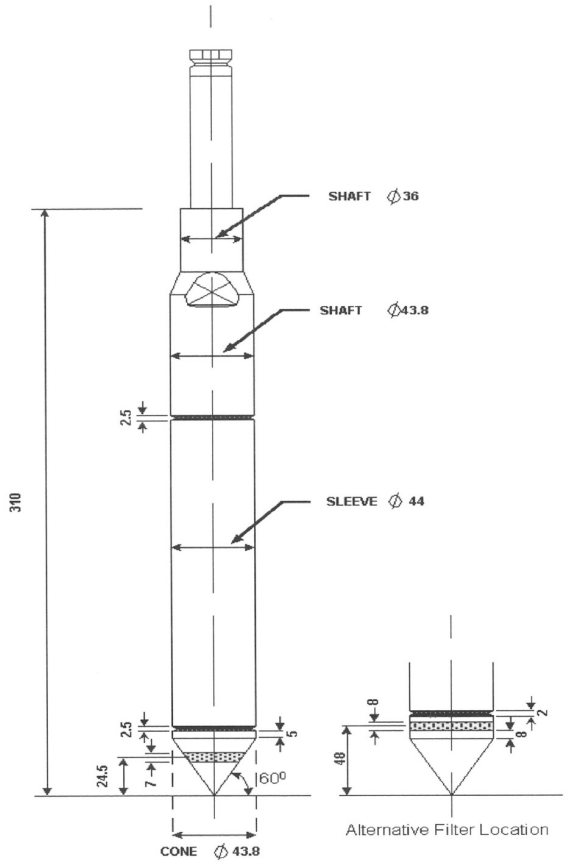

DIMENSIONS

CONE BASE AREA	(mm^2)	:	1,500
SLEEVE AREA	(mm^2)	:	20,000
ά FACTOR		:	0.59

SPECIFICATIONS

CONE LOAD CELL			
- FULL SCALE RANGE	(kN)	:	75
- OVERLOAD CAPACITY	(kN)	:	200
CONE PLUS SLEEVE LOAD CELL			
- FULL SCALE RANGE	(kN)	:	75
- OVERLOAD CAPACITY	(kN)	:	200
PORE PRESSURE TRANSDUCER			
- FULL SCALE RANGE	(Mpa)	:	5.0
- BURST PRESSURE	(Mpa)	:	12.5

NOTES:

1. LOAD CELLS/TRANSDUCERS MAY BE CALIBRATED FOR LOWER RANGES
2. UNEQUAL SLEEVE END AREAS
3. SUBTRACTION TYPE
4. ALL DIMENSIONS IN mm
5. BUILT-IN AMPLIFIERS
6. SLOPE SENSOR INCORPORATED
7. THREADED END : INTERNAL, CONICAL