WASHINGTON STATE UNIVERSITY

Nuclear Radiation Center

April 7, 2010

Document Control Desk
U.S. Nuclear Regulatory Commission
Washington, DC 20555-0001

Reference: Washington State University
Docket No. 50-27, License No. R-76

Subject: Response to WASHINGTON STATE UNIVERSITY – REQUEST FOR ADDITIONAL INFORMATION REGARDING THE WASHINGTON STATE UNIVERSITY TRIGA REACTOR LICENSE RENEWAL (TAC NO. ME1589); Dated January 28, 2010

The Request for Additional Information dated January 28, 2010 has been received at Washington State University. Included with this cover letter are the responses of Washington State University to the Request for Additional Information. Also included are proposed changes to the Washington State University Technical Specifications for License Number R-76. Proposed changes to the Technical Specifications are indicated by change bars in the margins on the right side of the document.

I declare under penalty of perjury that the foregoing is true to the best of my knowledge.

Executed on : April 10, 2010

Respectfully Submitted,

Donald Wall

Donald Wall, Ph.D.
Director

Attachments

cc: Region IV Office
Linh Tran
Frank DiMeglio

A020
NRR

P.O. Box641300, Pullman, WA 99164-1300
509-335-8641 • Fax: 509-335-4433 • www.wsu.edu/nrc

The following text includes a reproduction of the questions and comments that were sent to WSU in the REQUEST FOR ADDITIONAL INFORMATION REGARDING THE WASHINGTON STATE UNIVERSITY TRIGA REACTOR LICENSE RENEWAL (TAC NO. ME1589) dated January 28, 2010. Each individual RAI is followed by the response of WSU.

1. **The 2002 SAR, Chapter 2, Section 2.1.2 provides information current as of 2002. NUREG 1537, Part 1, Section 2.1.2, Population Distribution, (Section 21.2) requires that the data should be based on the most recent information available and also requires information regarding the distance to the nearest permanent residence (including but not limited to dormitories). Please update the population distribution to bring the information up to the most current data available and include the distance to the nearest permanent residence or dormitory.**

Response
Population estimates are prepared for April 1 of each year by the State of Washington Office of Financial Management (OFM). This is the link to the OFM data table that provides population estimates for the years 2001 through 2009:

http://www.ofm.wa.gov/pop/april1/finalpop2009.pdf

The 2000 Census population of Pullman was 24,948, and the population was estimated by the OFM to have grown to 27,600 as of April 1, 2009.

The distance to the nearest permanently occupied dwelling (an apartment building in the Valley Crest Village apartment complex) is approximately 626 meters at a compass heading of 239 degrees. Valley Crest Village was built in the early 1970's and there are forty-eight two and three bedroom apartments in this complex. The distance to Stimson Hall, the nearest dormitory is 1800 meters at a compass heading of 243 degrees. Other housing (apartments) are approximately 725 meters at a compass heading of 303 degrees. There has not been construction of new housing units within a 725 meter radius since 2002, and the Valley Crest Village apartments remain the only housing units within 725 meters of the reactor facility. Thus the change in population distribution since 2002, within 725 meters of the facility is negligible, and affected only by the changeover of residents within the Valley Crest Village apartment complex. New construction within Pullman has tended to be northwest of the reactor facility, at distances greater than one kilometer.

Distances and compass headings to housing units were obtained from the Google Earth website.

2. **Chapter 3 of your 2002 SAR does not include explicit limitations on the operation of the crane and the requirement that the crane in the reactor building not be parked over the reactor pool. NUREG 1537, Part 1, Section 3.1, Design Criteria requires that the applicant should identify design criteria for structures, systems and components; modes of operation ; location; applicable design criteria, etc. that help provide defense in depth against uncontrolled release of radioactive materials. Please explain how the crane in the reactor building is operated and what preventive actions exist ensuring that the crane is securely located, when not in operation.**

Response
WSU Standard Operating Procedure Number 1, "STANDARD PROCEDURE FOR USE OF THE REACTOR" specifies in Section Q the requirements for use and location of the crane. SOP 1, Section Q stipulates the following:

- The crane may not be positioned over the reactor or pool when the reactor is in operation.
- The crane is to be "parked" at the far west end of the pool room, away from the reactor pool when not in use.
- The power supply for the crane is locked in the "off" position when the crane is not in use, or when the reactor is in operation.

The key for the crane power supply lock is kept in the reactor control room. Only licensed Reactor Operators or Senior Reactor Operators have unescorted access to the control room and pool room, which are defined as Controlled Access Areas. Thus, no unlicensed person can access or operate the crane without the knowledge of a licensed individual.

3. **NUREG 1537, Part 1, Section 4.2.4 Neutron Startup Source, requires that the applicant should provide information on the materials of the startup source. Chapter 4, Section 4.2.4 of the 2002 SAR does not identify the material of the encapsulation of the startup source. Please identify the material of the cylinder that contains the antimony –beryllium startup source.**

Response
The startup source was manufactured by General Electric, and consists of an antimony cylinder, surrounded by a cylindrical beryllium shell, with the concentric antimony and beryllium cylinders enclosed within a shell composed of aluminum. The materials description may be found in the report, "Descriptive Specification for Swimming Pool Reactor" by the Atomic Power Equipment Department of General Electric (document number GEZ-1830). A photocopy of the engineering diagram that illustrates the neutron start-up source is included with this response document. Part Number 2 on the engineering diagram, Capsule SB-BE-NS-2 FROM ORNL is not in use at WSU. The small capsule that is not in use is a small sized neutron source that was intended for initial start-up of the reactor. The larger (lower) source was shipped in an unirradiated condition, thus the need for the smaller capsule source for initial start-up. However, the larger source has been activated through routine operation, and is the only start-up source in use.

4. **NUREG 1537, Part 1, Section 4.3, Reactor Tank or Pool requires that the applicant present all information about the pool necessary to ensure its integrity and should assess the possibility of uncontrolled leakage of contaminated primary coolant and should discuss preventive and protective features. Chapter 4, Section 4.3 of your 2002 SAR does not provide this information.**

   a. **Please discuss the reactor pool water level monitoring system, alarm levels and required responses from operator and/or university personnel, if remote alarm signal is present.**
   b. **Please discuss potential draining pathways of reactor pool water leakage, operator responses and radioactivity monitoring before release to sewage system.**

c. **Upon complete loss of coolant, water would drain to floor and into sump. Please discuss sump and holdup tank volume and radioactivity in coolant before releasing water to sewage.**

Response to RAI 4(a)
The reactor pool water level is monitored by a system that is equipped with three float switches. The float switches are mounted at different vertical positions on a single support assembly that is anchored to the pool wall. Thus, each of the three switches is activated at a different pool water level. The upper switch is a high pool water level alarm. The middle switch energizes or denergizes the pool make-up water supply system. The lower switch activates a low pool water level alarm.

The upper alarm switch is mounted 3.5 inches above the pool make-up water supply switch.

The lower alarm switch is mounted 4.5 inches below the pool make-up water supply switch.

The upper (high) level alarm switch is configured such that it is in the normally closed position, thus sending a positive signal when the pool water level is in a normal range with respect to being overfilled.

The lower level alarm switch is configured such that it is in the normally closed position, thus sending a positive signal when the pool water level is above the normal range. In the case of either the upper or lower switches, a loss of electrical continuity would result in an alarm condition.

The pool make-up water switch is configured such that it is in the normally closed position when the pool water is at or above the pre-set level, and the switch opens when pool water level falls. An open circuit is interpreted by the make-up water delivery system as requiring delivery of make-up water. As a result of this configuration, a loss of electrical continuity would be interpreted as a command to activate the pool water make-up system. This configuration is the more conservative, as a high pool water condition is less serious than a low pool water condition. The only exception to the above description occurs when the make-up water relay is removed for maintenance, in which case the make-up feed system will not engage.

The upper and lower pool water sensors send trouble signals when activated. There are three different means by which a pool water level alarm may be communicated to reactor staff members:

1. There is a local alarm, consisting of an annunciator and alarm indicator light on the reactor control console
2. The system sends a signal to a continuously monitored external monitoring station at the Whitman County police, fire, and ambulance dispatch center (also known as Whitcom)
3. The system has an autodialing feature which automatically sends a pre-recorded telephone message to an emergency cellular telephone number. There is a licensed (RO or SRO) member of the reactor staff on call at all times during non-business hours. The emergency cellular telephone is carried by the on-call staff member.

Standard procedure for a pool water trouble signal is for Whitcom to dispatch a WSU police officer to the scene to investigate. Whitcom also maintains a call list of WSU NRC staff members. A Whitcom dispatcher will notify a WSU NRC staff member who will also respond to

the scene to investigate. Due to the on-call policy, a licensed staff member can respond to an alarm any time day or night, generally in no more than 15 – 20 minutes.

Description of responses to pool water level alarms is described in the WSU Emergency Plan, and Standard Operating Procedure Number 18, "STANDARD PROCEDURE FOR ACTION IN EVENT OF AN ALARM."

Response to RAI 4(b)

Draining Pathways

Reactor pool water leaks could potentially happen through lack of structural integrity of the pool wall, e.g. a hairline crack, or a malfunctioning beam port. Irrespective of the pathway of the leak, the floor drains in the possible leak areas, (e.g. the beam room or the fresh fuel and radioactive materials storage area, the pool water purification room) all drain into a building "hot drain" system. The effluent from the hot drain system flows into a lower underground tank that has a volume of 3000 gallons. The contents of the lower (3000 gal.) tank may be pumped into an "upper" tank, also underground but about ten feet higher in elevation than the lower tank. The upper tank has a capacity of 5000 gallons. The difference in the elevation of the two tanks is due to the fact that the facility is adjacent to a steep hill, and the upper tank is farther uphill than the lower tank. The upper tank has a recirculation feature, which allows a pump to thoroughly mix the water, thus assuring homogeneity. Only the upper tank has a means to be emptied into the sanitary sewer system. The only connections to the lower tank are from the building hot drain system and the pump line to the upper tank.

Standard operating procedure is to pump the effluent that has collected in the lower tank into the upper tank, and allow the water to recirculate for at least four hours. Water samples are then taken and checked for radioactivity by both liquid scintillation counting and gamma-ray spectrometry. This is normally done about one time per year. It is not necessary to empty the tanks more frequently because the effluent volumes are normally much less than 3000 gallons per year, and consist mostly of water with small amounts of hand soap due to hand washing in laboratory areas.

Since the lower tank is smaller in volume than the upper tank, it would not be possible to overfill the upper tank with one lower tank volume, and cause an inadvertent discharge into the sanitary sewer system.

Operator Responses

Pool water leaks are generally divided into two classes (slow and fast) with respect to operator responses. A slow leak is a leak that results in a water loss rate that is within the capability of the pool make-up water system to maintain normal pool water levels, i.e. on a scale similar to normal evaporative losses. A fast leak is a leak that exceeds the capability of the pool make-up water system to maintain normal pool water levels. Responses to both types of leaks are described in the WSU Standard Operating Procedures and Emergency Response procedures.

Slow Leak

Slow leaks in reactor pools are not unheard of. The WSU reactor facility experienced such a leak during the 1990's. The leak was sufficiently slow that much of the leaking water evaporated before entering the hot drain system. The leaking area was monitored for radioactivity and the hot drain system was monitored for radioactivity according to standard

operating procedures. The leak was repaired and the pool was relined with an epoxy sealant. A normal response to a slow leak would be to closely monitor the situation, measure the leak rate by monitoring pool water make-up system delivery volumes, and determine a course of action to repair the leak. The reactor may not be started or operated unless the pool water level is within the normal range.

Fast Leak

A fast leak as described in the following conditions would constitute an emergency, and would be classified as an Alert:

1. A low pool level alarm with visual observation indicating an abnormal loss of water at a rate exceeding the pool makeup capacity or
2. A pool level alarm plus pool room radiation alarm during non-business hours.

Such a condition would immediately trigger activation of the WSU Reactor Facility Emergency Organization, and the WSU Emergency Management. The initial response for a fast leak is identical to the WSU Earthquake Emergency Procedure as described in the WSU Emergency Plan. The volume of water in the case of catastrophic damage could potentially exceed the capacity of the two hold-up tanks, however, pool water release is an analyzed event—the entire contents of the pool water could be released as effluent directly into the sanitary sewer system without exceeding 10 CFR 20 release limits. As an example, please refer to the response to RAI 7 for discussion of tritium in the pool water.

Radioactivity Monitoring

The procedure for sampling and monitoring water in the waste tanks is described in WSU Nuclear Radiation Center Standard Operating Procedure Number 1.1: STANDARD PROCEDURE FOR ANALYSIS OF LIQUID WASTE SAMPLES.

WSU monitors the radioactivity content in the upper tank before a determination is made regarding discharge into the sewer system. Two samples are taken for radioactivity measurement. One sample of 500 mL volume is used for gamma spectroscopic analysis. A second 1 mL sample is counted by means of liquid scintillation. The combination of the two methods is used to ascertain radioactive content (or lack thereof) and identification of the waste tank contents.

Response to RAI 4(c)

The floor hot drain system empties into an underground tank which has a capacity of 3000 gallons. The contents of the lower tank may be pumped into an upper tank, which has a capacity of 5000 gallons. Only the upper tank can be discharged into the sanitary sewer system.

5. **NUREG 1537, Part 1, Section 7.3 Reactor Control System, requires that the process instruments be designed to measure and display such parameters as coolant flow, temperature, or level; etc. In some designs, this information may also be sent to the RPS. The thermal hydraulic analysis of the converted WSU reactor core as presented in Chapter 7, Section 7.3 of the Revised 2008 SAR dated June 13, 2008 assumes a core water inlet temperature of 30°C with an administrative limit of 50°C. It does not propose a Technical Specification (TS) limiting condition for the coolant water inlet temperature. Please explain why a TS limit on water temperature is not needed.**

Response.
WSU has analyzed reactor performance for core water inlet temperatures of 50 °C. The thermal hydraulic analysis was carried out by Argonne National Laboratory during 2008, during the course of preparation for conversion of the reactor from HEU to LEU fuel. The results are presented in a response dated September 03, 2008, and may be found in the U.S. NRC ADAMS system under accession number ML082390030.

The pertinent information is reproduced here.

Text from September 3, 2008 RAI Response, ML082390030

1. Your additional input to your answer for request for additional information (RAI) 28 dated August 4, 2008, provided the results of thermal hydraulic analysis at 50 °C pool temperature and a reactor power level of 1.0 MW(t). However, TS 3.1 allows reactor power levels up to 1.3 MW(t). Please provide a new analysis performed at the license limits of 50 °C pool temperature and 1.3 MW(t) reactor power level. Discuss why the results of the analysis are acceptable.

Revised Response to RAI Question 28:

Washington State University currently has an administrative limit of 50°C for maximum pool water temperature – the reactor may not be operated with pool water temperatures greater than 50°C. The reactor pool water cooling system has been shown to be capable of indefinitely maintaining the pool water temperature below 50°C when operating at full licensed power, under all ambient weather conditions.

The analysis was repeated for a power level of 1 MW, to show that thermal hydraulic results are still acceptable at 50°C. Results are presented below for the hottest fuel element.

Parameter	Inlet Temp 30°C (86°F)	Inlet Temp 50°C (122°F)
Exit Coolant Temperature, °C (°F)	84.06 (183.3)	98.3 (208.9)
Maximum Wall Temperature, °C (°F)	142.6 (288.6)	142 (288)
Peak Fuel Temperature, °C (°F)	500 (932)	499 (931)
Minimum DNB Ratio	2.50	2.20
Channel Mass Flow Rate, kg/sec	0.0919	0.103
Maximum Flow Velocity, cm/sec	18.90	21.3
Exit Clad Temperature, °C	130.9	131

Since limited operation is permissible up to a power level of 1.3 MW, the analysis was repeated at that power level with an inlet temperature of 50°C to show that they are still acceptable. Results are presented below for the hottest fuel element.

Parameter	Inlet Temp 30°C (86°F)	Inlet Temp 50°C (122°F)
Exit Coolant Temperature, °C (°F)	91.98 (197.6)	101.3 (214.4)
Maximum Wall Temperature, °C (°F)	165 (330)	165 (329)
Peak Fuel Temperature, °C (°F)	541 (1005)	540 (1004)
Minimum DNB Ratio	1.92	1.69
Channel Mass Flow Rate, kg/sec	0.104	0.126
Maximum Flow Velocity, cm/sec	21.6	26.9
Exit Clad Temperature, °C	141	141

Both results show a reduction in the DNB ratio but very little change in fuel or cladding temperatures. An increase in natural circulation flow helps to offset the effect of the higher coolant inlet and exit temperatures.

The analyses for DNB are based on the Bernath correlation which has been used for TRIGA reactors for many years. The results shown in the tables above are reasonable to ensure the safety of the facility.

END of Text from September 3, 2008 RAI Response, ML082390030

WSU has never had a Technical Specification limit for coolant water inlet temperature for two reasons:

1. There is an Administrative Limit of 50° C for pool water temperature.
2. The cooling tower provides adequate cooling capacity to maintain pool water temperature below 50° C, even when running at 1 MW for extended times during hot weather.

The administrative limit on pool water temperature appears in WSU Nuclear Radiation Center Standard Operating Procedure No. 4: STANDARD PROCEDURE FOR STARTUP, OPERATION, AND SHUTDOWN OF THE REACTOR. The pertinent part of the SOP is Section C.2.e., which states, "If the pool water temperature becomes greater than 50 °C, rundown the reactor."

As a result of the capacity of the pool water cooling system, the 50 °C Administrative Limit has been judged to provide adequate assurance that the reactor would not be operated with pool water temperatures in excess of 50 °C. A technical specification limit would have a somewhat different effect on operations as compared to an administrative limit—in the case of the Administrative Limit, the reactor would have to be shut down upon reaching a 50 °C pool water temperature. In the case of a Technical Specification limit the reactor would have to be shut down before the pool water temperature reached 50 °C (e.g. at 45 °C) in order to provide an adequate margin of error to avoid violating, or even approaching a violation of a Technical

Specification. All RO and SRO are thoroughly trained on both SOP and Technical Specification limits, and are well-aware of the 50 °C pool water temperature limit. The pool water temperature is not tied into the SCRAM chain, nor is there an engineered system that lowers reactor power upon reaching a pre-set pool water temperature. As a result, limitations on pool water temperature are dependent upon operator training and compliance with written procedures and conditions. Irrespective of whether the pool water temperature is an SOP or Technical Specification limit, any operator who would allow operation of the reactor at pool water temperatures greater than 50 °C would be guilty of negligence in the conduct of the duties of an RO or SRO.

In order to develop data to provide a comprehensive answer to this question, WSU has reviewed operating records for the period of January 1, 2000 through January 31, 2010. Every date on which a pool water temperature reading exceeded 40 °C is reported in Table 5.1, below, along with the relevant circumstances. The highest recorded temperatures were 44.8 °C on 10/31/2008 and 44.6 °C 1/11/2005, in both cases after operating continuously for about 75 and 36 hours, respectively.

Pool Temp °C	Date	Time	Circumstances (a)
40.3	9/24/2009	1450	Thursday, after running 7+ hours/day all week
41.0	6/25/2009	0000	Friday, after operating 24/7 for four days
41.5	6/24/2009	2029	Thursday, after operating 24/7 for three days
41.0	12/23/2008	1615	Tuesday after 2 days of 8+ hours operation
44.8	10/31/2008	1131	Friday after operating 12+ hours/day all week
40.0	7/23/2008	0000	Wednesday, after operating 24/7 since Monday morning
40.4	7/22/2008	2103	Tuesday, after operating 24/7 since Monday morning
41.6	7/3/2008	1429	Thursday after running 7+ hours/day all week, during summer
41.0	7/2/2008	1430	Wednesday after running 7+ hours/day all week, during summer
40.5	7/1/2008	1410	Tuesday after running 7+ hours/day all week, during summer
40.8	7/19/2007	454	Friday of a shift run
41.1	7/18/2007	1854	Thursday of a shift run
40.1	6/5/2007	0049	Tuesday of a shift run
40.2	6/4/2007	2249	Monday of a shift run (14 hours continuous running)
41.4	4/20/2006	1757	Thursday of a shift run
40.1	4/19/2006	2153	Wednesday of a shift run
40.5	12/15/2005	1711	Friday of a shift run
41.2	12/14/2005	0004	Thursday of a shift run
42.6	12/13/2005	1204	Tuesday of a shift run
40.3	6/22/2005	0000	Wednesday of a shift run, performed a power cal the week before*
40.8	6/21/2005	2123	Tuesday of a shift run, performed a power cal the week before*

40.0	5/18/2005	2036	Wednesday of a shift run
41.1	1/12/2005	0151	Wednesday of a shift run, performed a power cal the week before*
44.6	1/11/2005	2250	Tuesday of a shift run, performed a power cal the week before*
42.6	11/15/2004	2028	Ran with cooling shut down for maintenance earlier in the day, Monday of a shift week
40.0	9/29/2004	1830	Wednesday of a shift run
40.0	9/28/2004	2129	Tuesday of a shift run
40.1	9/1/2004	1805	Wednesday during a period of daily running for 2 weeks
41.1	8/19/2004	1004	Thursday of a shift run during summer
42.2	8/18/2004	1804	Wednesday of a shift run during summer
41.9	8/17/2004	1705	Tuesday of a shift run during summer
41.0	8/16/2004	2304	Monday of a shift run during summer
40.3	8/5/2004	1716	Thursday after running 7+ hours/day all week, during summer
41.0	8/4/2004	1604	Wednesday after running 7+ hours/day all week, during summer
40.2	8/3/2004	1658	Tuesday after running 7+ hours during summer
40.1	7/20/2004	1621	Tuesday after running 7+ hours during summer
41.1	7/15/2004	0304	Thursday of a shift run during summer
41.5	7/14/2004	2204	Wednesday of a shift run during summer
40.0	7/13/2004	2303	Tuesday of a shift run during summer
41.6	6/24/2004	1555	Thursday after running 7+ hours/day all week
40.6	6/23/2004	1206	Wednesday after running 7+ hours/day all week
40.4	10/28/2003	1952	Tuesday of a shift run
40.1	10/1/2003	1804	Wednesday of a shift run
41.8	8/21/2003	1620	Thursday of a shift run during summer
40.9	8/20/2003	1613	Wednesday of a shift run during summer
41.2	8/7/2003	1608	Thursday of a shift run during summer
42.6	8/1/2003	1654	due to running every day consistently during warm months
42.9	7/31/2003	1605	due to running every day consistently during warm months
42.3	7/30/2003	1457	due to running every day consistently during warm months
41.4	7/29/2003	1554	due to running every day consistently during warm months
42.8	7/24/2003	1609	due to running every day consistently during warm months
43.1	7/23/2003	1605	due to running every day consistently during warm months
41.1	7/22/2003	1618	due to running every day consistently during warm months
42.0	7/17/2003	1511	due to running every day consistently during warm months
42.0	7/16/2003	1555	due to running every day consistently during warm months
40.8	7/15/2003	1539	due to running every day consistently during warm months
40.2	7/11/2003	0901	due to running every day consistently during warm months
42.5	7/10/2003	1557	due to running every day consistently during warm months
41.3	7/9/2003	1548	due to running every day consistently during warm months
40.4	7/3/2003	1441	due to running every day consistently during warm months
41.9	6/26/2003	1607	due to running every day consistently during warm months
41.2	6/25/2003	1706	due to running every day consistently during warm months

40.7	6/19/2003	1547	due to running every day consistently during warm months
41.8	6/18/2003	1608	due to running every day consistently during warm months
41.8	6/12/2003	1406	due to running every day consistently during warm months
40.4	6/11/2003	1618	due to running every day consistently during warm months
41.3	6/6/2003	1550	due to running every day consistently during warm months
40.8	6/5/2003	1628	due to running every day consistently during warm months
40.8	5/30/2003	1548	due to running every day consistently during warm months
40.0	5/22/2003	1519	due to running every day consistently during warm months
40.4	9/13/2002	1530	Friday after running 8+ hours/day all week
41.6	8/29/2002	1517	Thursday after running 8+ hours/day all week
41.4	8/28/2002	1534	Wednesday after running 8+ hours/day all week
40.3	8/23/2002	1602	Friday after running 8+ hours/day all week
40.6	8/15/2002	1541	Friday after running 8+ hours/day all week
40.7	8/14/2002	1534	Thursday after running 8+ hours/day all week
41.7	7/26/2002	1534	due to running every day consistently during warm months
42.1	7/24/2002	1553	due to running every day consistently during warm months
40.6	7/23/2002	1615	due to running every day consistently during warm months
41.6	7/18/2002	1618	due to running every day consistently during warm months
41.8	7/17/2002	1551	due to running every day consistently during warm months
40.5	7/16/2002	1603	due to running every day consistently during warm months
42.8	7/11/2002	1514	due to running every day consistently during warm months
41.3	7/10/2002	1613	due to running every day consistently during warm months
40.3	6/27/2002	1619	Thursday after running 8+ hours/day all week
40.9	6/26/2002	1542	Wednesday after running 8+ hours/day all week
40.6	8/16/2001	1606	due to running every day consistently during warm months
40.2	8/15/2001	1558	due to running every day consistently during warm months
40.1	7/12/2001	1558	due to running every day consistently during warm months
40.0	7/3/2001	1452	due to running every day consistently during warm months
			The pool temp never reached 40 degrees in 2000

(a) "A shift run" refers to the performance of a project that requires continuous, around-the-clock operation of the reactor at full power. In most cases, the shift runs commenced on the Monday of the respective week.

The normal rate of temperature rise when the secondary side of the cooling system is shut down, and the pool divider gate installed, is 5.9 °C per hour of operation at one megawatt. Under normal operating conditions, without the divider gate installed, the rate of temperature rise would be less (about half) the rate with the gate installed. Thus, the only credible way that the pool water temperature could be driven to greater than 50 °C would be for an operator to start and run the reactor at substantial power levels, for an extended period of time, with the cooling system in a non-functional or shutdown condition. Such an action by an operator would be contrary to multiple standard operating procedures, and would constitute either willful violations of standard operating procedures, or gross negligence of an extraordinary extent. Furthermore, even if the cooling system were to malfunction (e.g. a cooling tower fan failure), the rate of temperature rise of the pool would be sufficiently slow that it would be detected well

before reaching 50 °C, either upon observation of rising pool water temperature between hourly system readings, or upon taking hourly readings.

Finally, WSU would like to note that there is no fundamental objection to making pool water temperature into a Limiting Condition of Operation (LCO) if the U.S. NRC would so desire, but upon examination of the operating history of the reactor, and the fact that there is already a Standard Operating Procedure pool water temperature limit, does not consider it to be necessary to make pool water temperature a LCO.

6. **NUREG 1537, Part 1 Section 9.1, Heating, Ventilation and Air Conditioning Systems, requires that the applicant address the prevention of uncontrolled releases of airborne radioactive effluents to the environment during normal operations. If the HVAC systems also are designed to mitigate the consequences of accidents, the engineered safety features should be noted in this section but described in detail elsewhere. The applicant should discuss the bases and purpose of technical specifications that apply to the HVAC systems including calibrations, testing and surveillance. In Chapter 9, Section 9.1 of the Revised 2008 SAR dated June 13, 2008, a flow of 2000 cubic feet/min (cfm) is taken credit for during the discussion of the maximum hypothetical accident (MHA) public dose calculation. The applicant states that the WSU reactor facility ventilation system is monitored for filter efficiency but does not discuss the calibration of the flow rate. Please discuss how the flow rate is calibrated.**

Response

Flow rate through the HVAC system is measured directly. The WSU organization that has responsibility for measuring and maintaining air balances in university HVAC systems is the WSU Facilities Operations department. The flow rate measurements are carried out by an Environmental Controls Technician using an air velocity pitot tube anemometer. Small holes have been drilled in the air inlet and outlet ducts, through which the pitot tube may be inserted, and positioned at different locations within the duct. A series of measurements of air velocity is made within the air duct at various locations in a cross-sectional grid pattern. The velocity measurements are converted to volume by multiplying the velocity times the cross sectional area of the duct. The pitot tube access holes are plugged when not in use. The measurements are made for both air inlet and exhaust ducts in order to determine the setting for Manual Damper #5, which is used to bleed off air from the inlet duct, in order to adjust the air balance such that a negative (relative) air balance is maintained within the pool room.

WSU proposes to add a requirement to the Technical Specifications Section 4.3.4 that stipulates a biennial measurement of the air flow rates in the ventilation system. The proposed change to the Technical Specification is included as an attachment to this document.

7. **Chapter 11, Section 11.1.1 of your 2002 SAR does not include the occupational dose in the reactor room from Ar-41 and does not provide an estimate of the buildup of tritium in the pool water. NUREG 1537, Part 1 Section 11.1.1, Radiation Sources, requires that the applicant address the sources of radiation that are monitored and controlled by the radiation protection and radioactive waste programs. The sources should be categorized as airborne, liquid, or solid.**

a. **Please discuss occupational dose level from Ar-41during normal operation in the reactor room.**
b. **Please provide an estimate of the buildup of tritium in the pool water as a result of normal operation.**

Response to RAI 7 (a)

Occupational Dose Level from Ar-41 in the Pool Room
The Derived Air Concentration (DAC) value for Ar-41 that is presented in 10 CFR Part 20, Appendix B, Table 1 (Occupational Values) is 3×10^{-6} μCi/mL. Normally, the DAC value corresponds to the concentration in air that would result in an intake of one Annual Limit on Intake (ALI) for a 2000 hour working year. However, there is no ALI value for Ar-41, since argon does not form compounds, and is not retained within the body. In the present case, the DAC is derived for submersion in a hemispherical semi-infinite cloud of airborne material.

The count rate of Ar-41 in the pool room air during hours of operation during January, 2010 was 1.89 counts per minute, which corresponds to a concentration of Ar-41 in air of 2.3×10^{-4} Bq/mL or 6.3×10^{-9} μCi/mL. This value takes into account continuous around-the-clock monitoring, including non-operational hours, and as a result, is somewhat lower than the value that more accurately corresponds to occupational exposure values.

The count rate on the Ar-41 monitor was recorded 242 times during reactor operational hours between January 5 and March 12, 2010. The average value for the period is 4.7 ± 5.2 counts per minute, which corresponds to $1.6 \times 10^{-8} \pm 1.7 \times 10^{-8}$ μCi/mL, or about 0.5 ± 0.5 % of the DAC limit value. The largest single measurement, recorded at 11:33 a.m. on 29 January, 2010 was 47 cpm, which corresponds to 1.6×10^{-7} or 5.3%, of the DAC limit value, if this level were to continue for one work year. As a practical matter, the reactor generally operates approximately 1000 hours per year, i.e. during about half of the work year there is no Ar-41 production. Accordingly, during reactor operations (about half the work year), the operational dose level from Ar-41 is about 0.5% of the DAC value, and during reactor shut-down (about half the work year) there is no Ar-41 production, and consequently, no occupational dose at all due to Ar-41. One can reasonably conclude that the average occupational exposure is therefore about half of 0.5% of the DAC limit value.

Response to RAI 7 (b)
At WSU the only source of tritium buildup in the reactor pool is due to neutron capture of deuterium. There are two possible sources of deuterium in the reactor pool:

1. Deuterium production due to neutron capture by hydrogen
2. Naturally occurring deuterium in water

Deuterium production vs. naturally occurring deuterium

The reaction that produces tritium in the WSU reactor is:

$$^{2}H + n \rightarrow {}^{3}H \qquad 7.b.1$$

The amount of ^2H generated by the reactor is negligible compared to naturally occurring ^2H. Please refer to the calculations below for explanation of the volume of irradiated water, and average neutron flux of the reactor.

The volume of water under neutron irradiation that is used in the present calculation of ^2H production is 237.4 L (*vide infra*). A volume of 237.4 L contains 26,351 moles of ^1H, or 1.59×10^{28} atoms of ^1H. At an average neutron flux of 2.41×10^{16} $n \cdot m^{-2}s^{-1}$ (*vide infra*) the rate of generation of ^2H by neutron capture of ^1H is 4.59×10^{22} atoms of ^2H per 1000 hours of operation.

$$\# \text{ atoms} = n\sigma\phi t \qquad 7.b.2$$

$$(1.59 \times 10^{28}\ {}^1H \text{ atoms})\bullet(0.333 \times 10^{-24}\ cm^2)\bullet(2.41 \times 10^{12}\ n \cdot cm^{-2}s^{-1})\bullet(3.6 \times 10^6 \text{ seconds})$$

$$= 4.59 \times 10^{22}\ {}^2H \text{ atoms}$$

Where n is the number of target atoms, σ is the reaction cross section in cm^2, ϕ is the neutron flux in neutrons$\bullet cm^{-2}\bullet s^{-1}$, and t is the irradiation time, in seconds.

Using a pool water volume of 242,000 L, and neglecting evaporation loss, the buildup of ^2H is about 1.90×10^{17} atoms ^2H/L for 1000 hours of operation. The naturally occurring concentration of ^2H is about 1.03×10^{22} atoms/liter. Thus the approximate annual generation rate of ^2H is more than 50,000 times less than the naturally occurring concentration of ^2H. As a result, the naturally occurring concentration of ^2H will be used for the purposes of calculating the ^3H production rate, and the amount of ^2H that arises as a result of reactor operation will not be taken into consideration, as the quantity is insignificant in comparison to the natural abundance of ^2H.

The natural abundance of deuterium as a fraction of total hydrogen is about 0.000154, which is the fraction that will be used in the tritium production calculation (neglecting kinetic isotope effects, and differences in vapor pressure of heavy water). The rate of tritium production is a function of the amount of deuterium in the reactor and the average neutron flux.

Average neutron flux calculation

The WSU reactor typically operates with a pool water temperature of about 35 °C. The average thermal fission cross section for U-235 may be corrected to 308 K as follows (Glasstone and Sesonske, 1994):

$$\bar{\sigma} = \frac{\sigma_{kT}(kT)^{1/2}}{\overline{E^{1/2}}} \qquad 7.b.3$$

Where

$$\overline{\sqrt{E}} = \frac{2\pi}{(\pi kT)^{3/2}} \int_0^\infty E e^{-E/kT} dE \qquad 7.b.4$$

$$= \left(\frac{4kT}{\pi}\right)^{1/2} \qquad 7.b.5$$

Substituting (7.b.5) into (7.b.3) gives

$$\overline{\sigma_{th}} = \frac{\sigma_{kT}\sqrt{\pi}}{2} = \frac{\sigma_{kT}}{1.128} \qquad 7.b.6$$

The fission cross section of uranium-235 exhibits some departure from 1/v behavior, which is corrected by use of the g-factor, g(T), a correction factor for U-235 that is numerically equal to about 0.97 at 308 K (Glasstone and Sesonske, 1994). The average thermal fission cross section $\overline{\sigma_{th}}$ at temperature, T, is given by

$$\overline{\sigma_{th}} = \frac{g(T)\sigma_{kT}}{1.128}\left(\frac{T_0}{T}\right)^{1/2} \qquad 7.b.7$$

Where σ_{kT} is the cross section determined at some temperature T_0 (293 K in the present case), and T is the temperature to which the cross section is being corrected, i.e. 308 K.

$$\overline{\sigma_{th}} = \frac{(0.97)(582\times10^{-28}\text{m}^2)}{1.128}\left(\frac{293\text{K}}{308\text{K}}\right)^{1/2} = 488\times10^{-28}\text{m}^2 \qquad 7.b.8$$

The average thermal neutron flux is given by

$$\bar{\phi} = \frac{3.1\times10^{10}\text{P}}{\text{NV}\overline{\sigma_{th}}} = \frac{\left(3.1\times10^{10}\text{fissions}\cdot\text{sec.}^{-1}\text{W}^{-1}\right)\left(1\times10^{6}\text{W}\right)}{\left(2.63\times10^{25}\text{fissile nuclei}\right)\left(488\times10^{-28}\text{m}^2\right)} \qquad 7.b.9$$

$$= 2.41 \times 10^{16}\ \text{n}\cdot\text{m}^{-2}\text{s}^{-1}$$

Where 3.1×10^{10} is the number of fissions per second required to produce 1 watt of energy, P is the reactor power, NV is the number of fissile nuclei (U-235) in the reactor, $\overline{\sigma_{th}}$ is the temperature corrected fission cross section, and $\bar{\phi}$ is the average thermal neutron flux.
For the purposes of the tritium production rate calculation, the reactor volume will be defined as 77.47 cm length, 67 cm wide, 76.2 cm high, giving a volume of 395,515 cm^3. There are 119 fuel rods and 20 graphite reflectors. The length of a single fuel rod is 76.20 cm with a 55.63 cm long, 3.58 cm diameter stainless steel clad fuel and graphite reflector, with the top and bottom fittings smaller in diameter. Neglecting the volume contributed by the top and bottom fittings, the total volume of fuel elements is

$$119\pi\left(\frac{3.58\text{cm}}{2}\right)^2 55.63\text{cm} = 66{,}636\text{cm}^3 \qquad 7.b.10$$

There are 20 graphite reflector elements in the reactor. The dimensions of the reflector, neglecting the lower grid plate adaptor and handle, are 7.62 cm × 7.62 cm × 78.74 cm, resulting in a volume of 4572 cm^3 per reflector. The total volume of all reflectors is 91,440 cm^3.

Deuterium is present in water at 154 ppm, or about 1 atom of deuterium for every 6500 atoms of H. Thus, the number of deuterium atoms per liter of water is given by

$$0.000154\left(\frac{55.5\text{mol}}{\text{liter}}\right)\times 2\frac{\text{mol}\cdot{}^{1}\text{H}}{\text{mol}\cdot\text{H}_2\text{O}}\times 6.022\times 10^{23} = 1.03\times 10^{22}\,\text{atoms}\,{}^{2}\text{H/liter} \qquad 7.b.11$$

An upper bound for the volume of water in the reactor may be estimated by taking the total volume of the reactor, minus the volumes displaced by fuel and reflectors. Note that this does not account for the volume of water displaced by control blades, graphite reflector handles, fuel rod end fittings and handles, and other structural components. Neglecting the volume of water displaced by the upper and lower fuel rod fittings and handles, gives a volume of water in the reactor of:

$$395{,}515\ \text{cm}^3 - 66{,}636\ \text{cm}^3 - 91{,}440\ \text{cm}^3 = 237{,}439\text{cm}^3 \qquad 7.b.12$$

The number of deuterium atoms in the reactor is given by:

$$(237.44\ \text{L water}) \times (1.03 \times 10^{22}\ \text{atoms}\ {}^{2}\text{H/L}\ \text{H}_2\text{O}) = 2.44 \times 10^{24}\ \text{atoms}\ {}^{2}\text{H} \qquad 7.b.13$$

The amount of tritium produced in the WSU reactor for every year from 2000 through 2009 was calculated using 2.44×10^{24} atoms ^{2}H as the number of target nuclei, 2.41×10^{12} n·cm^{-2}s^{-1} as the average flux within the reactor; and the number of operational hours per calendar year. The following table provides the number of megawatt hours and number of microcuries of ^{3}H produced in each fiscal year (July 1 – June 30).

Fiscal year	MW hours of Operation	μCi ^{3}H Produced
2000	874.35	463
2001	1085.2	575
2002	915.83	485
2003	1000.3	530
2004	1405.41	745
2005	1266.83	671
2006	1233.35	654
2007	1272.53	674
2008	1020.2	541
2009	959.63	509

The calculation of tritium concentration in pool water is somewhat more conservative and simpler to carry out if it is approximated that there is no loss of tritium during the operational year (of tritium production) due to either radioactive decay or pool water evaporation. Corrections are made on an annual basis, at the end of each operational year, for losses due to radioactive decay and evaporation for years subsequent to the year of production, for each year of production. For example, the production of tritium in FY 2001 was 575 μCi. This value was then recalculated to account for radioactive decay and evaporation loss for every year through 2009, to obtain the amount of residual tritium produced in FY 2000 that remains in the pool in FY 2009. This process was repeated for each year of tritium production from 2000 through 2009. The tritium production for FY 2009 was not corrected for decay or evaporation losses. The amounts of tritium remaining in 2009 for each year of production from 2000 through 2009 were then summed to obtain a value for the tritium concentration in 2009.

	Year of Tritium Production (a)								
Year of Correction (c)	2001	2002	2003	2004	2005	2006	2007	2008	2009
2001	575								
2002	541	485							
2003	499	448	530						
2004	467	419	496	745					
2005	437	392	464	697	671				
2006	406	364	431	648	624	654			
2007	377	338	400	602	580	607	674		
2008	340	305	360	542	522	547	607	541	
2009	273	245	290	435	419	439	488	435	509
Total (b)	3533								

(a) All units for tritium are in microcuries.
(b) The Total is determined by adding all the amounts of 3H remaining in the pool from prior year production, corrected for radioactive decay and evaporation. The total value is the summation of all the values in the horizontal row for the year 2009.
(c) The data in the rows under the year of correction indicates the amount of tritium remaining in the pool during that year, for production in a given year. For example, 745 microcuries of tritium were produced in 2004, and; of the 745 microcuries produced that year, 435 remained in the pool in 2009.

Given an inventory of 3533 microcuries remaining in the pool in 2009, and a pool water volume of 2.42×10^8 mL the concentration of tritium in the pool at the end of FY 2009 was:

$$\frac{3533\mu\text{Ci}}{2.42\times10^{8}\text{mL}} = 1.46\times10^{-5}\,\mu\text{Ci/mL} \qquad 7.b.14$$

The release limits given in 10 CFR 20, Appendix C, Table 3 Releases to Sewers, for tritium is 0.01 μCi/mL monthly average concentration. The tritium concentration in the pool water is approximately 0.15%, or ca. 685 times below the sewer release limit, before dilution. The WSU Technical Specifications, Section 3.12 specify that the total annual quantity of liquid effluent that may be released may not exceed 1 Ci per year. The quantity of tritium in the pool water is sufficiently low that, even if the entire contents of the pool were to be emptied directly into the sanitary sewer system, the release limit for tritium could not be violated.

8. **Chapter 12, Section 12.1.3 of your 2002 SAR specifies that the senior reactor operator (SRO) can be reached by phone and does not address the ability to come to the site within a specified time. NUREG 1537, Part 1, Section 12.1.3, Staffing, requires that the applicant should discuss the availability of senior reactor operators during routine operation and should meet, at a minimum, the requirements of 10 CFR 50.54(m)(1). ANSI/ANS-15.1-1990, Section 6.1.3(1) specifies the minimum staffing when the reactor is not secured. The ANSI Standard calls for an SRO to be readily available on call and specifies this as within 30 minutes or 15 miles of the facility. Please describe how WSU expects to adhere to the guidance of the ANSI/ANS standard.**

WSU has a two person rule for all reactor pre-start up checkouts, start ups, and significant power increases. The two person rule requires that two licensed individuals, at least one of whom must be a Senior Reactor Operator, be at the facility during the aforementioned reactor manipulations. Occasionally, a single RO or SRO may remain in the facility while the second operator on duty leaves the facility for a short period of time for some purpose. It should be noted that the temporary absence of a licensed individual does not affect the "second person rule", i.e. that a second person must be in the facility at all times when the reactor is operating. At no time and under no circumstances is it permissible for a single licensed individual to operate the reactor without a second person in the facility. In a case where the licensed individual leaving the facility is to remain on call, WSU interprets being on call as remaining within the city limits of Pullman. Pullman, Washington is a small city; the distance from the WSU/NRC to the most distant point within Pullman, at the western extreme of the city limits, is approximately 3.85 miles. The travel time from the western city limit of Pullman, at the intersection of Washington State Highway 195 and Washington State Highway 270 to the WSU/NRC is 12 – 15 minutes, depending upon traffic. Thus, the SRO on-call may remain anywhere within the city of Pullman, and arrive at the WSU/NRC within 30 minutes of notification of the need to report to the facility.

WSU is submitting a proposed change to the Technical Specifications to clarify and codify the on-call requirement. The proposed change is included with this document as an attachment.

9. **NUREG 1537, Part 1, Section 10.1 Experimental Facilities and Utilization, requires that the applicant provide sufficient information to demonstrate that no proposed operations involving experimental irradiations or beam utilization will expose reactor operations personnel, experimenters, or the general public to unacceptable radiological consequences. Regulatory Guide 2.2, Section C.1.c.(3) states that the "materials of construction and fabrication and assembly techniques should be so specified and used that assurance is provided that no stress failure can occur at stresses twice those anticipated in the manipulation and conduct of the experiment or twice those which could occur as a result of unintended but credible changes of, or within, the experiment. During NRC staff review of Chapter 14 technical specification (TS) 3.10(4), Limitations on Experiments, allows that explosive materials in quantities less than 25 mg may be irradiated in the reactor in a container "provided that the pressure produced upon detonation of the explosive has been calculated and/or experimentally demonstrated to be less than the design pressure of the container." This is contrary to the suggested guidance. Please discuss whether the word "half" should be inserted after "less than" in TS 3.10(4)? If not, Please clarify TS 3.10(4**

Response to RAI 9

WSU agrees with the reviewer that the Technical Specification describing the container material should be revised to be in accordance with Regulatory Guide 2.2 issued by the U.S. AEC in November, 1973. WSU proposes a modification to Technical Specification 3.10 (4); the proposed change to the Technical Specifications is included as an attachment to this document.

References

Glasstone and Sesonske, 1994. Nuclear Reactor Engineering Reactor Design Basics, 4th Ed. S. Glasstone and A. Sesonske Chapman & Hall, NY pp. 82 - 85

Specifications: The reactor shall not be operated unless the facility ventilation system is operable, except for periods of time not to exceed 48 hours to permit repair or testing of the ventilation system. In the event of a substantial release of airborne radioactivity within the facility, the ventilation system will be secured or operated in the dilution mode to prevent the release of a significant quantity of airborne radioactivity from the facility.

Basis: During normal operation of the reactor and the ventilation system, the concentration of ^{41}Ar and other airborne radionuclides discharged from the facility is below the applicable maximum air effluent concentration (AEC) values. In the event of a substantial release of airborne radioactivity within the facility, the ventilation system will be secured or operated in a dilution mode as appropriate. This action will permit minimizing the concentration of airborne radioactive materials discharged to the environment until it is within the appropriate AEC value. In addition, operation of the reactor with the ventilation system shut down for short periods of time to make system repairs or tests does not compromise the control over the release of airborne radioactive materials. Moreover, radiation monitors within the building, independent of the ventilation system, will give warning of high levels of radiation that might occur during operation with the ventilation system secured.

3.10 Limitations on Experiments

Applicability: This specification applies to experiments installed in the reactor and its experimental facilities (defined in Section 1.2).

Objective: The objective is to prevent damage to the reactor or excessive release of radioactive materials in the event of an experiment failure.

Specifications: The reactor shall not be operated unless the following conditions governing experiments exist.

(1) Nonsecured experiments shall have reactivity worths less than 1.00$.

(2) The reactivity worth of any single experiment shall not exceed 2.00$.

(3) Total worth of all experiments will not exceed 5.00$.

(4) Explosive materials, such as gunpowder, TNT, nitroglycerin, or PETN, in quantities greater than 25 mg shall not be irradiated in the reactor or experimental facilities. Explosive materials in quantities less than 25 mg may be irradiated in the reactor or experimental facilities, provided the pressure produced upon detonation of the explosive has been calculated and/or experimentally demonstrated to be less than half the design pressure of the container.

(5) Experiment materials, except fuel materials, which could off-gas, sublime, volatilize, or produce aerosols under (a) normal operating conditions of the experiment or reactor, (b) credible accident conditions in the reactor, or (c) possible accident conditions in the experiment, shall be limited in activity so that if 100% of the gaseous activity or radioactive aerosols produced escaped to the reactor room or the atmosphere, the airborne concentration of radioactivity averaged over a year would not exceed the applicable limits of Appendix B of 10 CFR 20.

In calculations pursuant to item 5 above, the following assumptions shall be used:

extending more than 1 day, except for the pool level channel which shall be tested monthly.

(3) A channel calibration shall be made of the power level monitoring channels by the calorimetric method annually, but at intervals not to exceed 15 months.

(4) A channel test of each item in Table 3.2, other than measuring channels, shall be performed semiannually, but at intervals not to exceed 7.5 months.

Basis: Measurement of the scram time on an annual basis is a check not only of the scram system electronics, but also is an indication of the capability of the control rods to perform properly. The channel tests will ensure that the safety system channels are operable on a daily basis or before an extended run. The power level channel calibration will ensure that the reactor will be operated at the proper power levels. Transient control element checks and semiannual maintenance ensure proper operation of this control element.

4.3.3 Radiation Monitoring System

Applicability: This specification applies to the surveillance monitoring for the area monitoring equipment, Argon-41 monitoring system, and continuous air monitoring system.

Objectives: The objectives are to ensure that the radiation monitoring equipment is operating properly and capable of performing its intended function, and that the alarm points are set correctly.

Specifications: All radiation monitoring systems shall be verified to be operable at least monthly at an interval not to exceed 45 days. In addition, the following surveillance activities shall be performed on an annual basis at intervals not to exceed 15 months: 1) the area radiation monitoring system shall be calibrated using a certified source; 2) a calibration of the Ar-41 system shall be done using at least two different calibrated gamma-ray sources; 3) a calibration shall be performed on the CAM in terms of counts per unit time per unit of activity using calibrated beta sources.

Basis: Experience has shown that monthly verification of Radiation Monitoring Systems' operability in conjunction with an annual more thorough surveillance is adequate to correct for any variations in the systems caused by a change of operating characteristics over a long timespan.

4.3.4 Ventilation System

Applicability: This specification applies to surveillance requirements for the pool room ventilation system.

Objective: The objective is to ensure the proper operation of the pool room ventilation system in all operational modes; the isolation and dilute modes would be used to control the release of radioactive material to the environment in the event of an emergency.

Specifications: The operation of the pool room system shall be checked monthly (at intervals not to exceed 6 weeks) by cycling the system from the "normal" to the "isolate" and "dilution" modes of operation. The positions of the associated dampers, indicator display, and fan operation shall be visually checked to ensure correspondence between the device performance and selected mode of operation. The pressure drop across the absolute filter in the pool

ventilation system shall be measured at least twice a year. The absolute filter shall be changed whenever the pressure drop across the filter increases by 1 in. of water.

The air flow rates in the ventilation system shall be measured biennially, at intervals not to exceed 30 months.

Basis: Experience has shown that the only reliable method of testing the ventilation is to cycle the system into the various modes and visually check each portion of the system for proper operation in that mode.

4.3.5 Experiment and Irradiation Limits

Applicability: This specification applies to the surveillance requirements for experiments installed in the reactor and its experimental facilities and for irradiations performed in the irradiation facilities.

Specifications:

(1) A new experiment shall not be installed in the reactor or its experimental facilities until a hazards analysis has been performed and reviewed for compliance with "Limitations on Experiments," Section 3.10, by the Reactor Safeguards Committee. Minor modifications to a reviewed and approved experiment may be made at the discretion of the senior operator responsible for the operation, provided that the hazards associated with the modifications have been reviewed and a determination has been made and documented that the modifications do not create a significantly different, a new, or a greater hazard than the original approved experiment.

(2) An irradiation of a new type of device or material shall not be performed until an analysis of the irradiation has been performed and reviewed for compliance with "Limitations on Irradiations," Section 3.11, by a licensed senior operator qualified in health physics, or a licensed senior operator and a person qualified in health physics.

Basis: It has been demonstrated over a number of years that experiments and irradiations reviewed by the reactor staff and the Reactor Safeguards Committee, as appropriate, can be conducted without endangering the safety of the reactor or exceeding the limits in the Technical Specifications.

4.4 Reactor Fuel Elements

Applicability: This specification applies to the surveillance requirements for the fuel elements.

Objective: The objective is to verify the continuing integrity of the fuel element cladding.

Specifications: All fuel elements shall be inspected visually for damage or deterioration and measured for length and bend at intervals not to exceed the sum of 3,500.00$ in pulse reactivity. The reactor shall not be operated with damaged fuel. A fuel element shall be considered damaged and must be removed from the core if:

(1) in measuring the transverse bend, its sagitta exceeds 0.125 in. over the length of the cladding

(2) in measuring the elongation, its length exceeds its original length by 0.125 in.

(3) a clad defect exists as indicated by release of fission products

6.0 ADMINISTRATIVE CONTROL

6.1 Responsibility

The facility shall be under the direct control of a licensed Senior Reactor Operator (SRO) designated by the Director of the WSU Nuclear Radiation Center. The SRO shall be responsible to the Director for the overall facility operation including the safe operation and maintenance of the facility and associated equipment. The SRO shall also be responsible for ensuring that all operations are conducted in a safe manner and within the limits prescribed by the facility license, Federal and State regulations, and requirements of the Reactor Safeguards Committee.

6.2 Organization

(1) The reactor facility shall be an integral part of the Nuclear Radiation Center of Washington State University. The organization of the facility management and operation shall be as shown in Figure 6.1. The responsibilities and authority of each member of the operating staff shall be defined in writing.

(2) When the reactor is not secured, the minimum staff shall consist of:

(a) Reactor Operator (RO) at the controls (may be the SRO)

(b) Senior Reactor Operator (SRO) on call but not necessarily on site

(c) another person present at the facility complex who is able to carry out prescribed written instructions

For the purposes of Section 6.2, an individual who is "on call" shall be defined as

An individual who

- Has been specifically designated and the designation known to the operator on duty
- Keeps the operator on duty informed of where he/she may be rapidly contacted and the telephone number, and
- Is capable of getting to the reactor facility within a reasonable time under normal conditions (less than 30 minutes) and must remain within a 15 mile radius of the facility.

6.3 Facility Staff Qualifications

Each member of the facility staff shall meet or exceed the minimum qualifications of ANS 15.4, "Standard for the Selection and Training of Personnel for Research Reactors," for comparable positions.

6.4 Training

The licensed Senior Reactor Operator designated by the Director as being responsible for the facility also shall be responsible for the facility's Requalification Training Program and Operator Training Program.

6.5 Reactor Safeguards Committee (RSC)

6.5.1 Function

The RSC shall function to provide an independent review and audit of the facility's activities including:

(1) reactor operations
(2) radiological safety
(3) general safety
(4) testing and experiments
(5) licensing and reports
(6) quality assurance

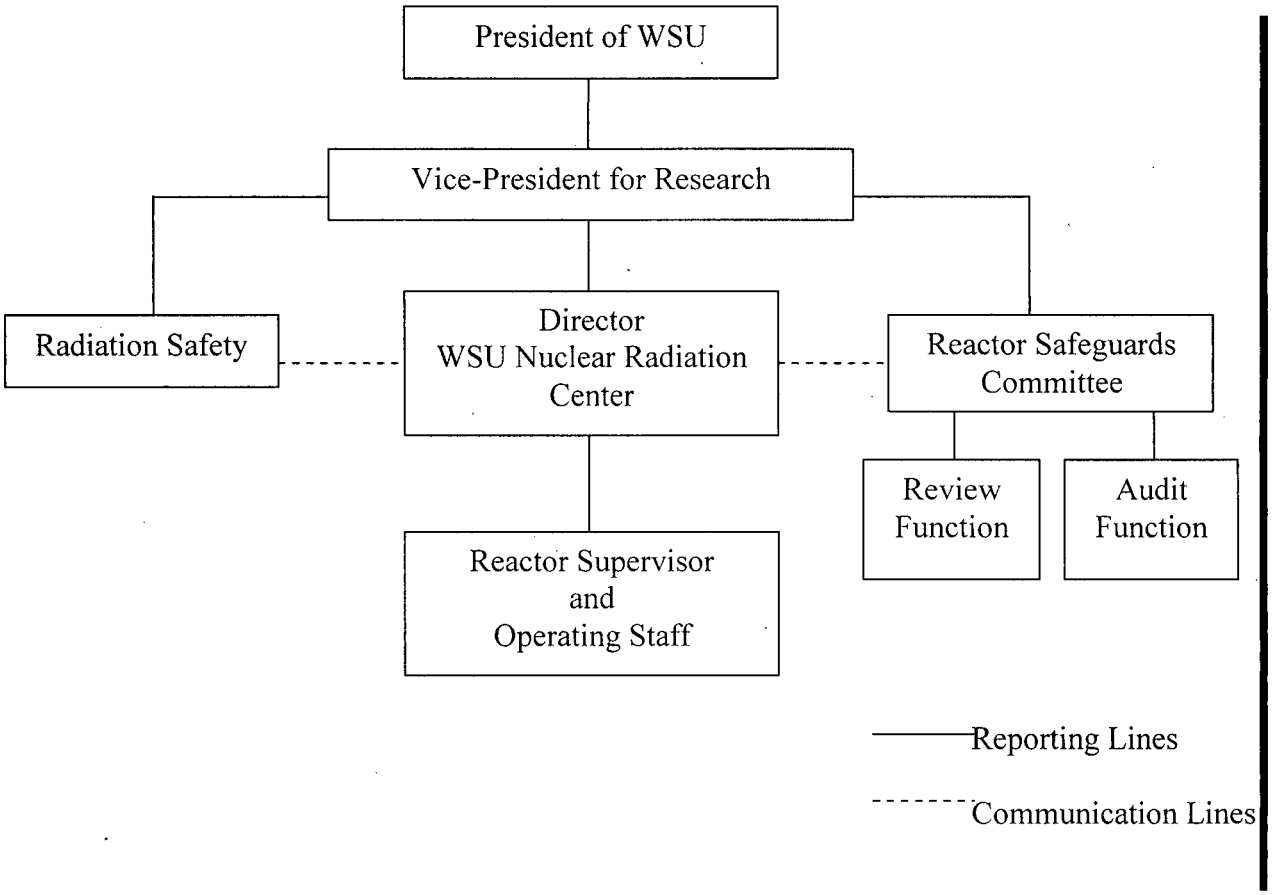

Figure 6.1 Facility organization

6.5.2 Composition and Qualifications

The RSC shall be composed of at least five members knowledgeable in fields that relate to nuclear reactor safety. The members of the Committee shall include one facility Senior Reactor Operator and WSU faculty and staff members designated to serve on the Committee in accordance with the procedures specified by the WSU committee manual. The University's Radiation Safety Director shall be an ex officio member of the Committee.

6.5.3 Operation

The Reactor Safeguards Committee shall operate in accordance with a written charter, including provisions for:

(1) meeting frequency: the full committee shall meet at least semiannually and a subcommittee thereof shall meet at least semiannually

(2) voting rules

(3) quorums: chairman or his designate and two members

46-9588-10
Amend No 2

July 20, 1960

Division of Licensing and Regulation
U. S. Atomic Energy Commission
Washington 25, D.C.

Attention: Mr. John E. Bower

Reference: DIR:IB:RWS(26826)

Gentlemen:

This is in reply to your letter of June 28, 1960 requesting further information on the General Electric Type II Antimony-Beryllium source.

The source and holder are manufactured by the General Electric Company. Enclosed are six copies of information on fabrication and sealing characteristics and three drawings as supplied to us by the manufacturer.

It should be pointed out that the source holder shown in G.E. Drawing 655C430 contains Antimony and Beryllium supplied to us in a non-radioactive form. In use near the reactor core Antimony-124 will be produced, hence we would want the license to cover the Antimony-124 contained in the capsule and source holder. The total Antimony-124 activity will not exceed 75 curies.

Sincerely yours,

Harold W. Dodgen

Harold W. Dodgen
Director
Nuclear Reactor Laboratory

HWD/cb
cc: S.E.Haglet,Chairman,
Isotopes Committee
encl: 1) Information on GENS-Type II Sealed Source
2) General Electric Drawing No. 655C430
3) General Electric Drawing No. 1114A909
4) General Electric Drawing No. 856B731

UNLESS OTHERWISE		D USE THE FOLLOWING:—		
APPLIED PRACTICES	SURFACES	TOLERANCES ON MACHINED DIMENSIONS		
		FRACTIONS	DECIMALS	ANGLES
307A500		±	±	±

655C430

SOURCE ASSEMB

FIRST MADE FOR NEUTRON SOUR

G	PART NO.	NAME	DRAWING	MATERIAL, WEIGHT
X	1	ASM		
1	2	CAPSULE	SBBE-NS-2 FROM ORNL	
1	3	JACKET CAP	111A1654, P-1	
1	4	CAP	111A1653, P-1	
1	5	JACKET	8558804	
1	6	CUP ASSEM	2558 [illegible], G-1	
1	7	BOTTOM PLATE	[illegible] P-1	
1	8	HOOK	8558601 P-1	
1	9	NUT	3/8-16 NC2 B25	
8	10	NUT	1/4-20 NC2 B25, P-1	
1	11	STRAP	111A1652 P-1	
2	12	THDED SHAFT	111F [illegible] P-1	
AR	13	SAFETY WIRE	STN STL TYPE 304 .062 DIA	

P.L. ISSUED

Note
1- Drill .5" Sl. Hole For Safety Wiring Pellet Pile At Assembly
2- Shielded Arc Weld At Assembly To GE Spec. APED-W-2 & APED-T-1
3- Pt 2 To Be Activated To 50 Curies By Radioisotope Sales Dept. Oak Ridge National Laboratory, Oak Ridge Tenn. Or Equiv. Before Shipment To Field
4- Shipping Cask To Be Returnable Type Available Through The Vendor Of Pt 2

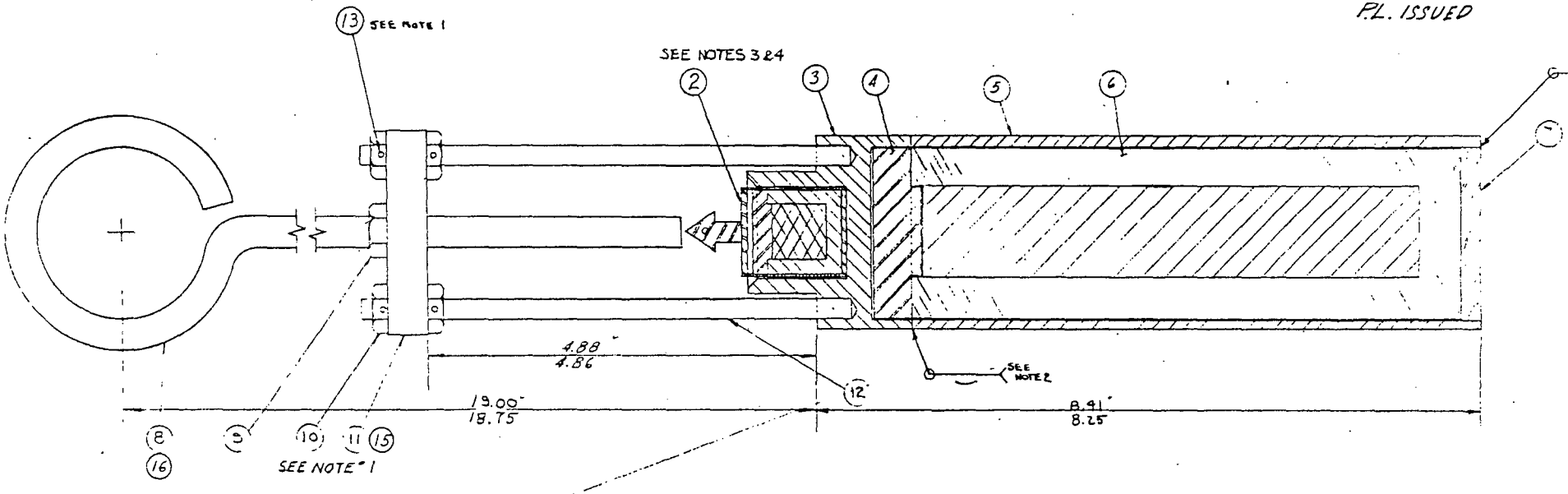

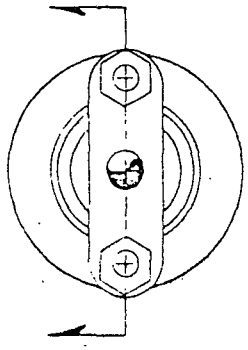

1
14
SEE NOTES

Figure 2.10

DESCRIPTION OF GROUPS	REVISIONS	PRINTS TO
	1 [illegible] 3-4-57	
	2 [illegible]	

APED 655C430

NRC Handout No. 31, 2/73