New Reactor Design Certification Critique

April 6, 2010
NRC Commission Briefing

Sandy Rupprecht
Vice-President, Regulatory Affairs
Westinghouse Electric Company

The Key Challenge

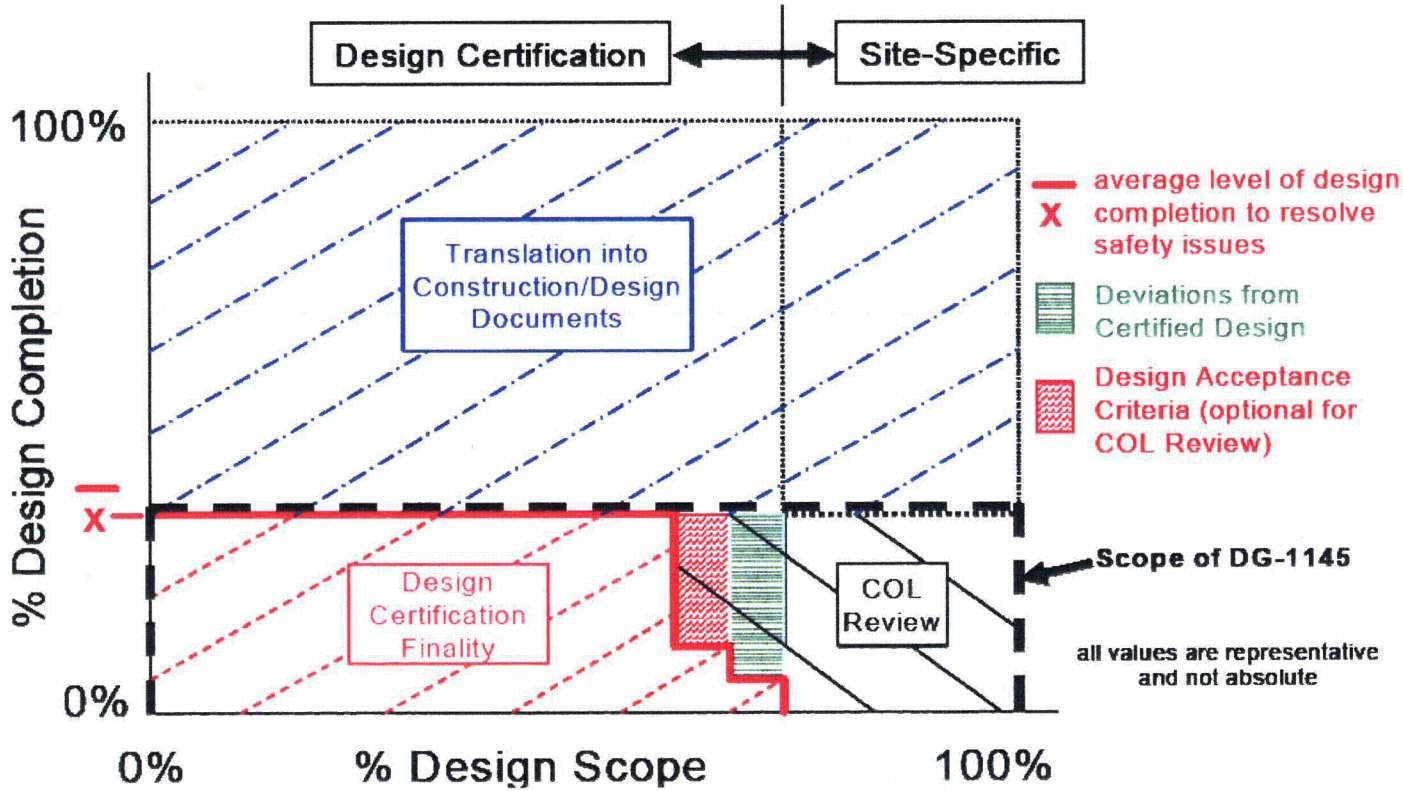

Design vs. Licensing Basis Finalization
Concurrent Design & Licensing Finalization

Westinghouse

Assessment

- Good Practices
  - Communication –channels, frequency, & clarity
  - Management engagement & accessibility
  - Project management discipline
  - Public disclosure & IP protection balance

- Areas For Improvement
  - Level of design detail to satisfy reasonable assurance
  - Management of changes
  - Rulemaking process

Westinghouse

Design Certification Review Process

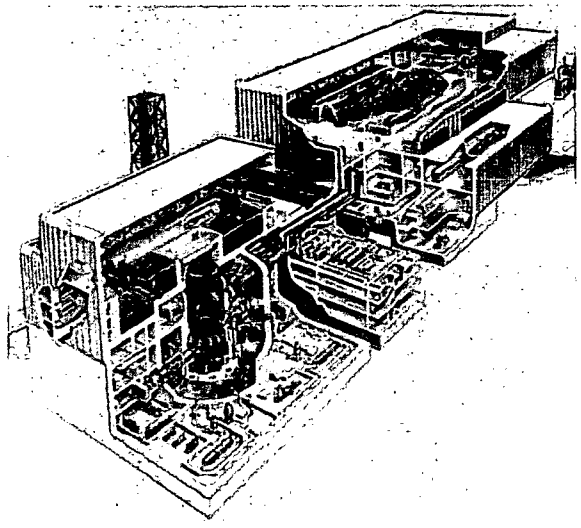

Jerry Head
Sr. Vice President,
Regulatory Affairs

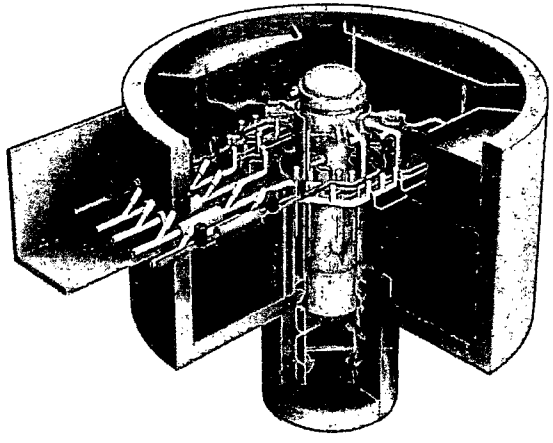

April 6, 2010
NRC Commission Briefing

HITACHI

What is working well?

- **10 CFR Part 52 Process is Working**
  - Design Certification rules, Early Site Permits, and a Limited Work Authorization have been issued
  - Additional Design Certifications and Combined License Applications are under review
    - ACRS process of performing initial reviews by Design Control Document ("DCD") chapter is working well
    - New DC Rulemaking process will soon be tested with the ESBWR DC (SECY-09-0018)

What is working well? (cont.)

- **Design Certification Reviews**
  - NRC has ramped up resources for multiple Design Certification applications
    - Addressing challenges in first-of-a-kind reviews
  - Industry applicants for Combined Licenses see benefit in standard design process for future projects
    - Design Centered Approach and Reference COLAs concept
  - NRC and industry interactions to address generic topics

Lessons Learned

- Management of NRC review process and execution should be standard and transparent to applicants
  - Organization charts
  - Manpower estimates
  - Detailed schedule
- Process for handling evolving regulatory requirements and guidance needs to be clear

Lessons Learned (cont.)

- Expectations regarding sufficient level of detail should be established
- Applicants and NRC need guidance regarding treatment of first-of-a-kind issues and technology innovation

Design Certification Process

April 6, 2010

Thomas E. Sliva
Vice President , New Plant Projects
AREVA

AREVA

What is working well

- Design Centered Working Groups provide a forum for standard approach to issue resolution
- eRAI process simplifies exchange of RAIs and responses
- Allowing individual SERs with open items to progress through ACRS
- Coordination of ACRS presentations eliminates surprises
- Level of interaction with staff is constantly improving
  - Minimizes misunderstanding of issues
  - Provides forum for problem resolution

Areas for Attention

- Dealing with new regulatory guidance issued during the review
- Defining role of MDEP in NRC review process
- Level of detail required to reach closure
- Common understanding of path to close issues
  - Status of submitted RAI responses
  - What questions are on the way?
  - Agreement on level of management interaction required
- Early identification of new questions arising from the actual writing of the SERs

MNES
MITSUBISHI NUCLEAR ENERGY SYSTEMS, INC.

US-APWR

DCD Lessons Learned

April 6, 2010

Frank Gillespie, Senior Vice President
Mitsubishi Nuclear Energy Systems

Successful Aspects

- Overall approach is sound.
- Communications at all levels.
- Intermediate milestone adjustments have accommodated most changes.
- Innovation in submittals has been accepted by the staff to minimize impacts.
- Schedules are taken seriously.

Areas for Improvement

- Complete the updating of guidance.
- Docketing review and letter should address alternative approaches.
- Acknowledgement of acceptability of RAI's.
- Schedule impact of outstanding confirmatory results.

TOSHIBA

Leading Innovation >>>

Feedback on the Design Certification Process

Tuesday, April 6, 2010

Robert W Schrauder
Vice President, Licensing
US ABWR Projects & Technologies

TOSHIBA
Leading Innovation >>>

What's Working Well

- NRO Communication with Industry
- NRC Considers Industry Input
- Industry/NRC Coordination Thru NEI

TOSHIBA
Leading Innovation >>>

What Could Improve

- Understanding of "Finality"
- Treatment of Codes and Standards
- Change Approval Process

U.S. DEPARTMENT OF
ENERGY

Nuclear Energy

DOE Programs for Small Modular Reactors and Advanced Reactor Concepts
April 6, 2010

Richard Black
Director

Office of Advanced Reactor Concepts
Office of Nuclear Energy
Department of Energy

U.S. DEPARTMENT OF ENERGY

Nuclear Energy

Office of Advanced Reactor Concepts

- **Office of Advanced Reactor Concepts**
  - New Office established in FY2011
  - Responsible for both SMR and Advanced Reactor Concepts

- **FY2011 Budget Request for Advanced Reactor Concepts**
  - ~$61M
  - Engage industry, NRC, federal and international organizations to establish the appropriate DOE role to enable and accelerate licensing and deployment of SMR and Advanced Reactor technologies into the commercial markets.

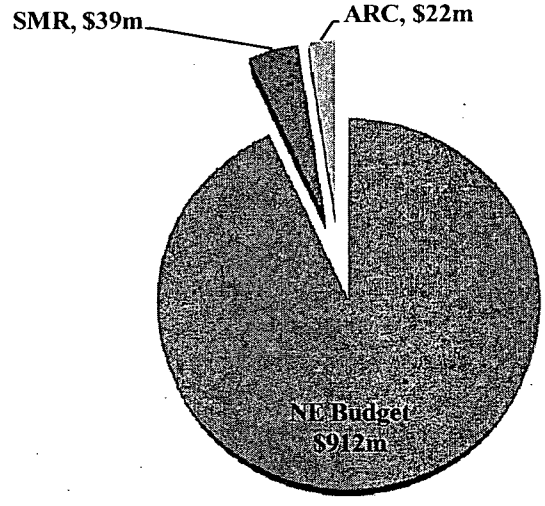

FY 2011 Budget Request

U.S. DEPARTMENT OF ENERGY

Nuclear Energy

SMRs and Advanced Reactor Designs and Concepts

- **SMR and advanced reactor designs and concepts can be grouped into three sets based on:**
  - Design type
  - Estimated licensing and deployment schedule
  - Maturity of design

- **Three sets:**
  - Light Water Reactor (LWR) evolutionary based designs
    - 5-10 years
  - Non-LWR designs
    - 10-15 years
  - Advanced (Transformational) Reactor Concepts and Technologies
    - 15-25+ years

Note: DOE currently defines SMRs as those reactor designs that are ≤300MWe, and fabricated in modules that are transportable from the factory to the site by rail, truck, or barge.

U.S. DEPARTMENT OF ENERGY

Nuclear Energy

SMR/ARC Program Focus Areas

- **Focus areas for RD&D based on estimated deployment schedules for reactor types:**
  - 5-10 Year
    - Cost-share partnership with LWR SMR designs where near-term NRC licensing can be completed.
  - 10-15 Year
    - Engage industry, universities, and DOE National Laboratories on new and innovative technologies and advanced reactor concepts (non-LWR) to enable them for licensing and deployment.
  - 15-25+ Year
    - Support previously established international collaborations established under GEN IV on advanced/transformational reactor concepts.

U.S. DEPARTMENT OF ENERGY

Nuclear Energy

SMR/ARC Program Activities

- **TARGET**
  - Demonstrate if SMRs/ARCs meet safety requirements and offer economic or other advantages supporting deployment.

- **FY 2010 Activities**
  - Conduct FY2010 workshop(s) .
    - Evaluate SMR designs.
      - Schedule
      - R&D requirements
      - Maturity
    - Establish priorities to enable development and deployment.
      - Near-term
      - Long-term
    - Identify appropriate federal roles.
      - R&D
      - Funding
    - Establish DOE programs.
  - Visit SMR vendors/customers to determine viability of design and commercial markets, and needs requirements.

U.S. DEPARTMENT OF ENERGY

Nuclear Energy

SMR/ARC Program Activities

- **FY 2011+ Potential Activities:**
  - Fund NRC design certification fees for up to two (2) LWR SMR designs.
    - Cost-share.
    - Awarded through an open, competitive process.
  - Support RD&D activities at DOE national laboratories and universities.
    - Cost-shared where appropriate.
    - Advanced SMR/ARC designs involving experiment, theory, risk-assessment, and modeling and simulation.
  - Collaborate with NRC to develop an SMR/ARC licensing framework.
    - Identify where DOE R&D can support NRC's regulatory decision-making.
  - Develop objective cost models to assess the SMR business case.
    - Evaluate and support economics of SMRs.
  - Evaluate applicability of current nuclear codes and standards to support SMR/ARC licensing.
    - Collaborate with NRC, standards developing organizations and industry to identify gaps (NESCC, co-chaired by ANSI and NIST).
    - Develop new and/or revise nuclear industry codes and standards as needed.

U.S. DEPARTMENT OF ENERGY

Nuclear Energy

SMR Deployment Challenges

- **Technical**
  - Developing necessary R&D and demonstration of new reactor technologies
- **Licensing**
  - Applicability of LWR requirements, codes and standards
  - Application "completeness" for certification and licensing
  - NRC staffing and skill mix for non-LWR SMRs
- **Financial**
  - Cost validation of advanced, simpler designs
  - Upfront financial investment for first-of-a-kind designs
  - Validating design for innovative structures, systems and components
  - Availability of loan guarantees
- **Other**
  - End-user/customer commitment
  - Stakeholder acceptance
  - Proposed "Clean Energy" legislation(s) recognizing nuclear as part of the clean energy portfolio.

U.S. DEPARTMENT OF ENERGY

Nuclear Energy

DOE Role in SMR/ARC Program

- **Partner with industry and governmental organizations to evaluate SMR market potential and support appropriate RD&D and cost-share activities for licensing and deployment.**
  - SMR RD&D activities for FY2011 and beyond will support –
    - NE R&D Roadmap.
    - NE Imperative Implementation Plans.
    - SMR Program Plan.
  - NE R&D Roadmap will focus on the technical and licensing challenges.
  - NE cost-share activities will focus on the licensing and financial challenges.

U.S. DEPARTMENT OF ENERGY

Nuclear Energy

DOE-NE SMR/ARC Program Benefits

- **Administration and Congress recognize nuclear energy must be part of the nation's future energy portfolio.**
  - Nuclear Power Plants provide carbon-free energy for diverse applications.
  - DOE will work with the NRC to enhance regulatory requirements and licensing process for SMRs/ARCs.
  - DOE and DoD are evaluating SMR/ARC options for energy security .

- **SMRs supports near- and long-term job creation and non-proliferation goals.**
  - Jobs span manufacturing, technical and operational fields.
  - U.S. leadership revitalized in nuclear design, engineering and manufacturing.
  - SMR/ARC designs will incorporate proliferation resistant features.

- **SMRs can respond to diverse market needs for electricity and process heat.**
  - Retrofit/repower fossil fuel electrical plants.
  - Grid/location challenges.
  - Manufacturing/petroleum industry.

U.S. DEPARTMENT OF ENERGY

Nuclear Energy

Acronyms

ANSI	American National Standards Institute
ARC	Advanced Reactor Concepts
DoD	Department of Defense
DOE	Department of Energy
GEN IV	Generation IV
LWR	Light Water Reactor
NE	Nuclear Energy
NESCC	Nuclear Energy Standards Coordination Collaborative
NIST	National Institute of Standards and Technology
NRC	Nuclear Regulatory Commission
R&D	Research and Development
RD&D	Research, Development, and Demonstration
SMR	Small Modular Reactors
U.S.	United States

B&W mPower™
a progressive energy solution

Commission Briefing

April 6, 2010

Christofer M. Mowry, President
B&W Nuclear Energy

© 2010 The Babcock & Wilcox Company Nuclear Energy. All rights reserved.

B&W mPower™: Program Objectives

Develop and deploy, by 2020, a GEN III++ SMR that:

- ✓ Offers incremental utility-scale generation
- ✓ Improves construction process
- ✓ Enhances operational efficiency

Within the constraints of:

- Proven: Established NRC regulatory framework
- Simple: Integral NSSS, passively safe
- Benign: Underground, robust margins, air-cooled
- Practical: Standard fuel, containment, and O&M
- Affordable: $4000kW-6000/kW, configuration driven

© 2010 The Babcock & Wilcox Company Nuclear Energy. All rights reserved.

B&W mPower Consortium & IAC

A signed Consortium MOU with 4 utility partners

- ✓ Core utilities committed to B&W *m*Power solution
- ✓ Pursue key near-term development activities:
  - Regulatory Policy Issues
  - Site feasibility studies

An Industry Advisory Council for B&W mPower

- Customer input into design
- Eight domestic members
- Two international members
- Several others pursuing membership

Industry support demonstrated by Consortium and IAC

© 2010 The Babcock & Wilcox Company, Nuclear Energy. All rights reserved.

B&W *m*Power Lead Plant Schedule

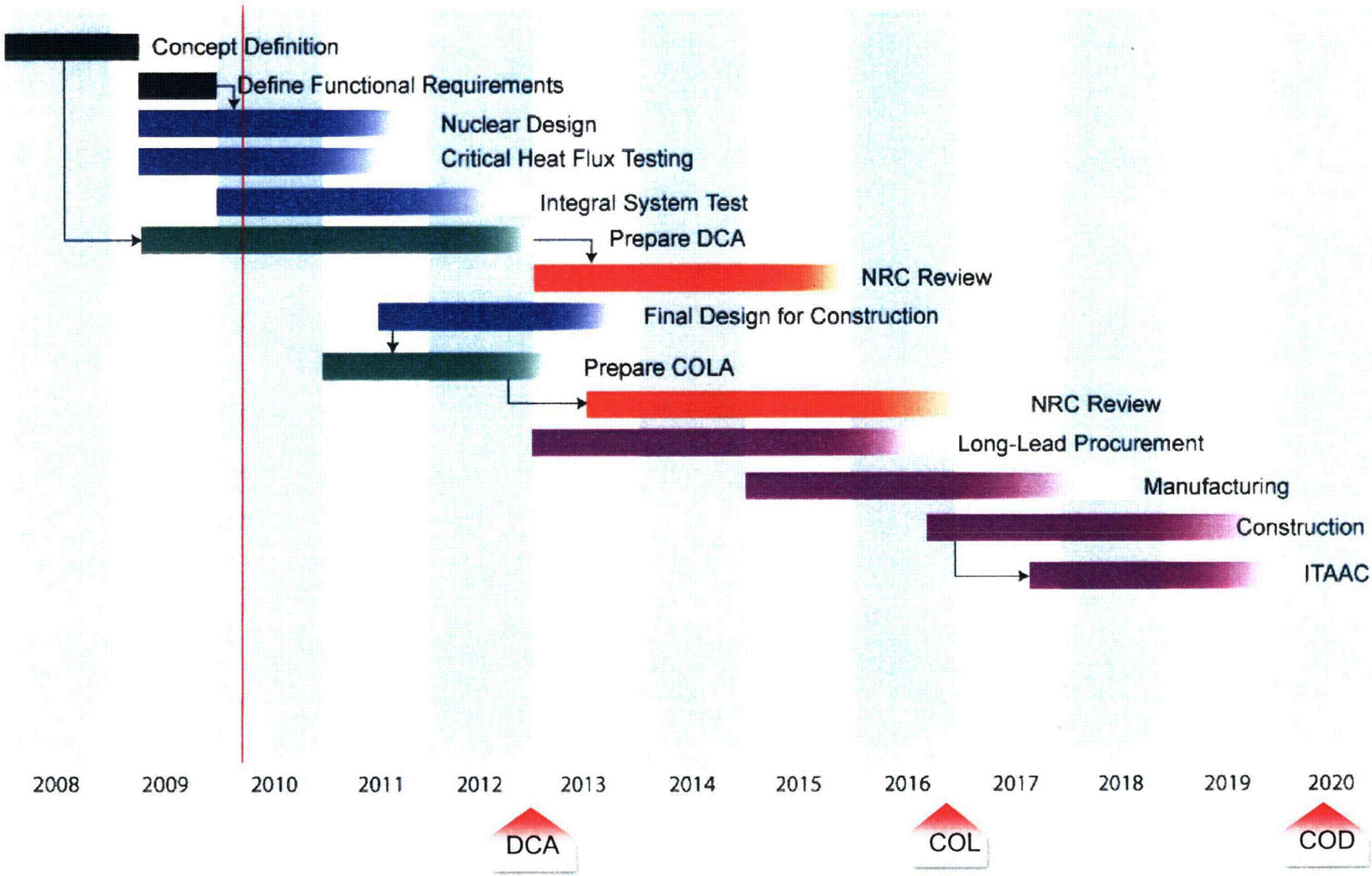

© 2010 The Babcock & Wilcox Company Nuclear Energy. All rights reserved

Planned Licensing Topical Reports

✓	QA Program Plan	March 2010
☐	mPower Design Description	April 2010
☐	Critical Heat Flux Testing Plan	April 2010
☐	Integrated Systems Testing Plan	June 2010
☐	Core/Fuel Design Criteria & Analysis Methodology	July 2010
☐	Accident Analysis Codes & Methodology	October 2010
☐	CRDM Design/Testing Plan	October 2010
☐	Multi-module Control Room & Operations Staffing	April 2011

120+ dedicated design, licensing, and manufacturing engineers

© 2010 The Babcock & Wilcox Company, Nuclear Energy. All rights reserved.

A Generation III++ Reactor

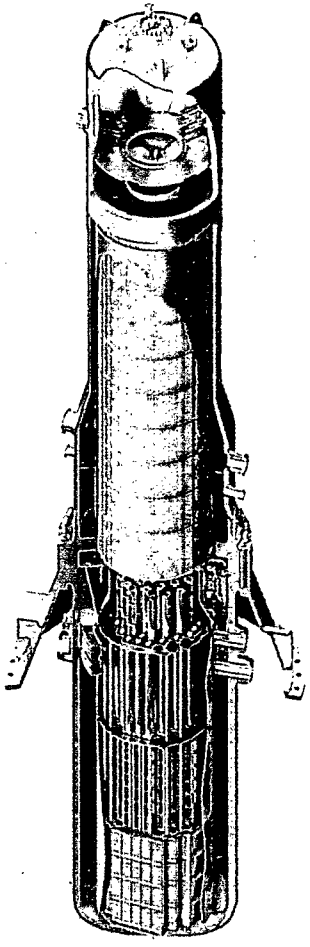

- Integral 125 MWe modular reactor
- Proven Advanced LWR technology
- Simple, fully "passive safety" design
- No emergency AC power
- "Industry standard" PWR fuel
- 60-year spent fuel storage
- 4-5 year fuel cycle
- Dry containment

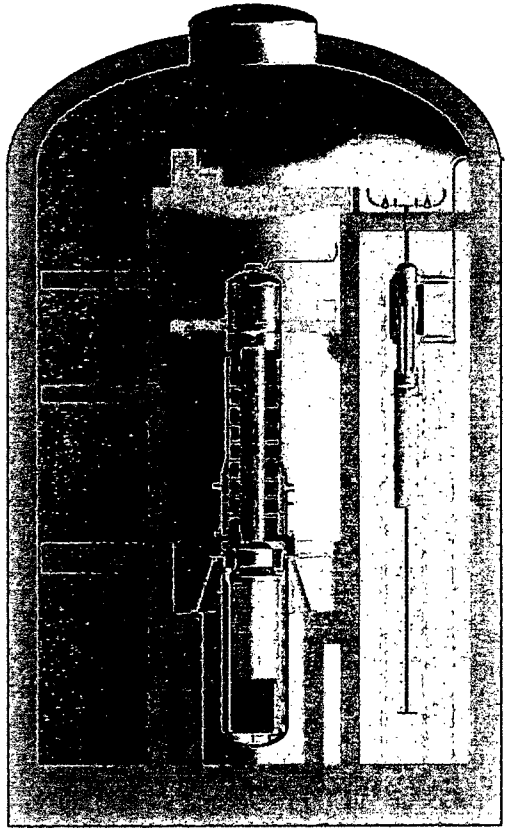

Best-in-Class Gen III+ technologies . . . breaks the scale-cost paradigm

© 2010 The Babcock & Wilcox Company. Nuclear Energy. All rights reserved.

Scalable Nuclear Plant

- 1-8+ modules per plant, 125-1,000+ MWe
- Scalable to grid, site, load-growth
- Fully independent Nuclear Islands
- Underground containment building
- Air- or water-cooled condenser
- Three-year construction schedule
- Reactor installed last

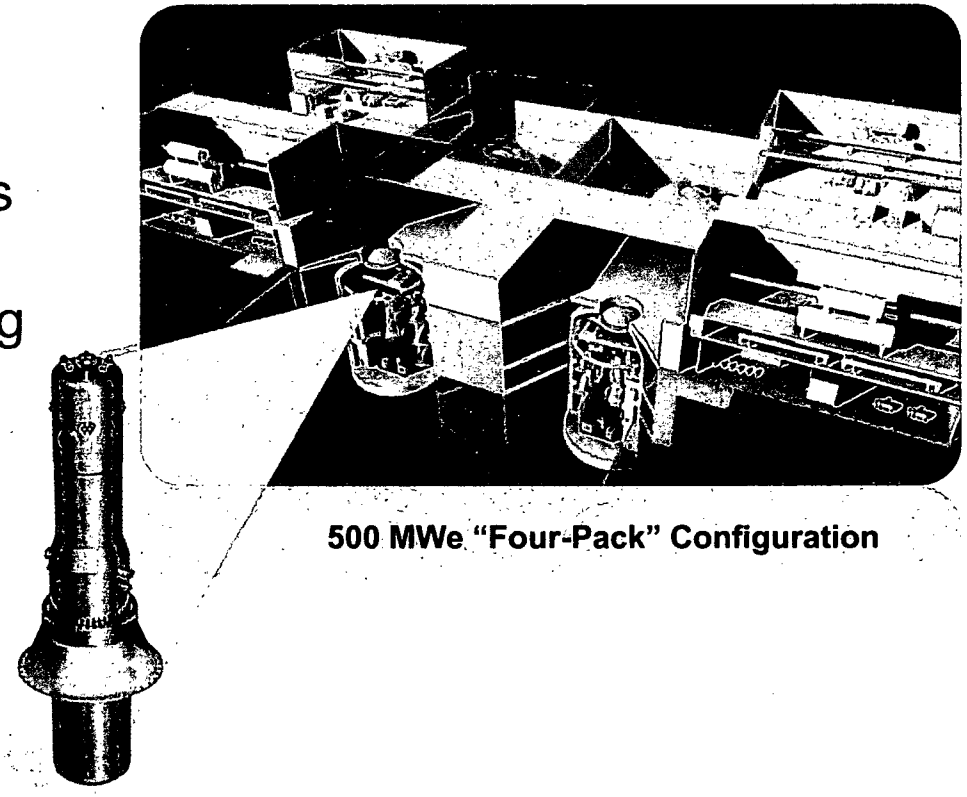

500 MWe "Four-Pack" Configuration

Flexible, affordable nuclear solution … Project cost and schedule certainty

© 2010 The Babcock & Wilcox Company Nuclear Energy. All rights reserved.

Westinghouse's Small Modular Reactor Program

April 6th, 2010

Michael Anness
Manager, Advanced Reactors
Research & Technology Unit

SMR Plans

- Westinghouse investigating SMRs as an option for customers
  - Ongoing for 10+ years
- Current activities in conceptual design phase
- Program evolving, capturing AP1000 lessons-learned

SMR NRC Engagement

- Program in pre-application licensing stage
  - Activities ongoing
- Design certification is preferred licensing path

Acronyms

- NRC: Nuclear Regulatory Commission
- SMR: Small Modular Reactor

NuScale Power: Plans and status of NRC interactions

April 6, 2010

Paul Lorenzini
Chief Executive Officer
NuScale Power Inc.

Plans and status

- Technology started under DOE-NERI program.
- Test facility in operation since 2003
- Notified NRC of intent to license in February, 2008
- Four pre-application meetings 2008-2009
- 15 LTRs planned 2010-2011
- DCD submittal Q1 2012

Market readiness

- Complete commitment to commercialization
- Advisory board formed 2008 - five major nuclear utilities
- Energy Northwest MOU 01/2009
- Additional discussions underway
- Interest in SMRs continues to grow – utilities, regulators, policy and opinion leaders

Regulatory process critical

- Committed to high quality DCD
  - Integral test facility – tests and code / system validation
  - Mature design – NSSS and BOP
  - Early completion of independent safety reviews (PRA / PIRT)
  - Multi-module control room simulator

Key issues to consider

- Safety Review – thorough, complete, timely
- Early identification and resolution of any design specific issues that affect timeline
  - See NuScale response to RIS 2010-03
- Generic Issues – SMR designers, industry work with NRC to resolve outside of Design Certification

U.S.NRC

United States Nuclear Regulatory Commission

Protecting People and the Environment

Periodic Briefing on New Reactor Issues – Design Certifications

Bruce S. Mallett
Deputy Executive Director for Reactor and Preparedness Programs

April 6, 2010

Agenda

- New Reactor Licensing Status
  - Michael Johnson
- Design Certification Review Insights
  - Frank Akstulewicz
- Advanced Reactor Program
  - Overview – Michael Mayfield
  - Policy Issues & Plans – William Reckley

Status

- Midway through the first combined license application reviews and making good progress.

- Driving technical issues to resolution in design certification reviews

Status

- Construction inspection activities have begun. Enhancements to the process continue.

- Preparing for advanced reactor reviews by identifying and developing plans for policy and technical issues.

Successes

- Created and implemented the Design Centered Approach
- Developed and implemented a process for early identification of project risks and issues
- Public Outreach

Insights

- **Regulatory guidance development should occur before industry develops its applications**

- **Early industry communication regarding its plans with NRC is important**

Insights

- Scheduling certainty and licensing predictability are enhanced when DCs are completed first
- First-of-a-kind design approaches are encouraged to improve safety but will require more review.
- Changing designs of DC or COLs under review leads to delays

Commission Interactions

- Design certification rulemakings
- Mandatory Hearing
- Design certification renewal

Advanced Reactor Program

- Address design and licensing reviews for advanced reactors

- Near Term Focus:
  - Regulatory infrastructure
  - Preparation for NGNP & iPWRs
  - Limited preparation for SFRs

Licensing Approach

- 10 CFR Part 52
- Build on large LWR experience and previous advanced reactor experience
- Emphasize guidance development and revision
- Early resolution of issues

Current Activities

- **Next Generation Nuclear Plant**
  - **Early and frequent interaction with DOE**
  - **Infrastructure and guidance development**
  - **Policy and key technical issues**
  - **Looking at first-of-a-kind issues**
  - **Preparation for COL submittal in 2013**

Current Activities

- iPWRs and SFRs
  - Pre-application discussions with suppliers
  - Emphasis on iPWRs
  - Identify and resolve generic policy issues
  - Awareness of technology and developments for SFRs

Policy & Key Technical Issues

- Defense in Depth
- Operator Staffing
- Modular Units/Expandable Site
- Physical Security
- Offsite Emergency Planning
- Financial Requirements
- Manufacturing License

Path Forward

- **Stakeholder Interactions**
  - **Pre-application meetings**
  - **Topical report and white paper reviews**

- **Resolution of key policy and technical issues**

Conclusions

- Involve NRC early in design process
- Learn from current LWR reviews
- Emphasis on preparation activities

Acronyms

- COL – Combined License
- DC – Design Certification
- DOE – U.S. Department of Energy
- iPWR – Integral Pressurized Water Reactor
- LWR – Light Water Reactor
- NGNP – Next Generation Nuclear Plant
- SFR – Sodium Fast Reactor