Sam Belcher
Vice President – Nine Mile Point

P.O. Box 63
Lycoming, New York 13093
315.349.5200
315.349.1321 Fax

CENG
a joint venture of
Constellation Energy · EDF

NINE MILE POINT
NUCLEAR STATION

March 22, 2010

U. S. Nuclear Regulatory Commission
Washington, DC 20555-0001

ATTENTION: Document Control Desk

SUBJECT: Nine Mile Point Nuclear Station
Unit No. 1, Docket No. 50-220

License Amendment Request Pursuant to 10 CFR 50.90: Revision to Containment Spray System Nozzle Surveillance Frequency

Pursuant to 10 CFR 50.90, Nine Mile Point Nuclear Station, LLC (NMPNS) hereby requests an amendment to Nine Mile Point Unit 1 (NMP1) Renewed Operating License DPR-63. The proposed amendment would revise the testing frequency for the Containment Spray System nozzles specified in Technical Specifications (TS) Surveillance Requirement 4.3.7.b from "at least once per operating cycle" to "following maintenance that could result in nozzle blockage."

Industry experience has shown that nozzle blockage is unlikely since the nozzles are a passive design and the system is kept in a normally dry state. The proposed frequency will continue to provide confidence that an unobstructed flow path is available and will preclude the need for unnecessary testing when no activities have occurred that would introduce debris into the headers and no active degradation mechanism is present. Testing at the proposed frequency would reduce outage dose and improve personnel safety.

The description and technical basis of the proposed changes are contained in the Enclosure. The proposed TS changes necessary for implementation are indicated on the marked-up page provided in Attachment 1 of the Enclosure. This submittal contains no new regulatory commitments.

NMPNS requests approval of this request by March 23, 2011, with implementation within 60 days of receipt of the approved amendment. The requested approval date and implementation period will provide adequate time to complete implementation activities for removing the scheduled operating cycle surveillance of the nozzles from the NMP1 Refueling Outage N1R21 scope (spring 2011).

ADD1
NRR

Pursuant to 10 CFR 50.91(b)(1), NMPNS has provided a copy of this license amendment request, with Enclosure, to the appropriate state representative.

Should you have any questions regarding the information in this submittal, please contact T. F. Syrell, Licensing Director, at (315) 349-5219.

Very truly yours,

STATE OF NEW YORK :
: **TO WIT:**
COUNTY OF OSWEGO :

I, Sam Belcher, being duly sworn, state that I am the Vice President-Nine Mile Point and I am duly authorized to execute and file this license amendment request on behalf of Nine Mile Point Nuclear Station, LLC. To the best of my knowledge and belief, the statements contained in this document are true and correct. To the extent that these statements are not based on my personal knowledge, they are based upon information provided by other Nine Mile Point employees and/or consultants. Such information has been reviewed in accordance with company practice and I believe it to be reliable.

Subscribed and sworn before me, a Notary Public in and for the State of New York and County of Oswego, this 22 day of March, 2010.

WITNESS my Hand and Notarial Seal: Lisa M. Doran
Notary Public

My Commission Expires:
9/12/2013
Date

Lisa M. Doran
Notary Public in the State of New York
Oswego County Reg. No. 01DO6029220
My Commission Expires 9/12/2013

SB/RJC

Enclosure: Evaluation of the Proposed Change

cc: S. J. Collins, NRC
R. V. Guzman, NRC
Resident Inspector, NRC
A. L. Peterson, NYSERDA

ENCLOSURE

EVALUATION OF THE PROPOSED CHANGE

TABLE OF CONTENTS

ATTACHMENTS

1.0 SUMMARY DESCRIPTION

This evaluation supports a request to amend Renewed Facility Operating License DPR-63 for Nine Mile Point Unit 1 (NMP1). The proposed amendment would revise Technical Specification (TS) Section 4.3.7, "Containment Spray System," by modifying the frequency of Surveillance Requirement (SR) 4.3.7.b, "Nozzles," from "at least once per operating cycle..." to "following maintenance that could result in nozzle blockage." Additional wording changes are being made to the SR to make it more consistent with the corresponding Standard TS (Reference 1), SR 3.6.1.7.4.

The proposed license amendment would revise the surveillance frequency for testing the drywell and torus spray nozzles. The proposed TS changes necessary for implementation are described below and are indicated on the marked-up page provided in Attachment 1. The proposed TS Bases changes are shown in Attachment 2. The TS Bases mark-ups are provided for information only and will be processed in accordance with the NMP1 Technical Specifications Bases Control Program (TS Section 6.5.6).

2.0 DETAILED DESCRIPTION

2.1 Description of the Proposed Change

SR 4.3.7.b requires that at least once per operating cycle, an air test shall be performed on the Containment Spray System (CSS) spray headers and nozzles. The frequency of this SR would be changed from "once per operating cycle" to "following maintenance that could result in nozzle blockage." Additionally, the SR is being revised to be more reflective of the Standard TS SR by deleting references to the type of test (e.g., air) performed and deleting references to the spray headers.

2.2 Background

The CSS is an Engineered Safeguards System which reduces containment pressure and temperature following a Loss-of-Coolant-Accident (LOCA). The system is designed to prevent containment pressure and temperature from exceeding design values for Reactor Coolant System leaks up to and including the design basis accident (DBA), the double-ended break of a reactor coolant recirculation line. The system is capable of meeting these design objectives even with degraded Emergency Core Cooling System performance and the release of energy from a fuel cladding metal-water reaction. The CSS provides long term cooling of the pressure suppression chamber (torus) after a LOCA. As a result, the system is a means of decay heat removal available following a DBA LOCA. The CSS is also capable of providing an unlimited supply of lake water for both core and containment cooling. This capability is provided by the containment spray raw water subsystem. This subsystem may be aligned to provide lake water directly to the reactor vessel via the core spray spargers and to containment via the containment spray headers. These alignments allow the CSS to be used to flood the reactor vessel above the top of the core. The CSS may also be used under normal operating conditions to cool the torus water and lower the torus water level. In addition, the CSS may be used under off-normal conditions to add lake water directly to the torus.

The CSS is designed with two redundant loops. The "primary" loop (Loop 11) provides water to the primary or "inner" drywell header and to the torus header. The "secondary" loop (Loop 12) provides water to the secondary or "outer" drywell header and to the torus header. (The torus header is common to both loops.) Each loop includes two redundant trains, each of which can provide water to the drywell header associated with the loop and to the one common torus header. Each train includes a containment spray pump, and the associated containment spray raw water pump and heat exchanger. All pumps in a loop are powered from the same emergency power bus.

SR 4.3.7.b currently requires that an air test be performed every operating cycle to ensure that the spray headers and nozzles are unobstructed. However, header and nozzle blockage is considered unlikely, except as a consequence of maintenance or repair, since the SR has been successfully completed every refueling outage from 1990 through 2009. The design of the system minimizes the likelihood of significant corrosion or degradation. The risks of the performance of this test are not commensurate with the safety benefit of performing the test unless there has been an activity which may have resulted in the introduction of material into the piping that may lead to nozzle blockage. Many of the spray nozzles are located high in the drywell and torus. Access to the nozzles, to verify they are unobstructed, is difficult and presents substantial personnel safety hazards. These risks are unwarranted given the very low risk of nozzle obstruction. Many other licensees have obtained license amendments that revised the frequency of the test from some specific periodicity to "following maintenance which could result in nozzle blockage" (reference Section 4.2, Precedent).

3.0 TECHNICAL EVALUATION

The NMP1 containment spray pipes that feed the drywell headers are 12" schedule #40, A333, GR6 carbon steel and schedule #80 galvanized carbon steel. These 12" pipes feed the seven ring headers consisting of 2" through 6" galvanized carbon steel. The nozzles are Grinnell Corporation Protectospray angle spray models made of corrosion resistant stainless steel. There are twenty of the Model D3, 28-0.275" (3/8") nozzles on header rings "F" and "G." There are one hundred eighty-four of the Model D3, 34-0.500" (1/2") nozzles on the remaining 5 header rings. All of the nozzles point downward except for those on the lowest header ring, which is ring header "A" on elevation 245 feet. These nozzles are pointed slightly above horizontal.

The containment spray pipes that feed the torus header are 12" schedule #40, A333, GR6 carbon steel. These two pipes feed one common ring header of mostly 4" and some 3" carbon steel pipe. The torus header is attached to the top of the torus and runs in a full circle around the torus. The 40 spray nozzles on this header are Spraying Systems Company Model 1H4.2, FullJet 1" nozzles with a 15/64" orifice. All of the nozzles in the torus point downward.

See the following attachments for more information:

Attachment 3, Grinnell Protectospray Nozzle
Attachment 4, Spraying Systems Company FullJet Nozzle
Attachment 5, Drywell Spray Header Schematic
Attachment 6, Containment Spray Piping and Nozzle Sizes

Air flow testing and visual inspections of the NMP1 drywell and torus spray nozzles from 1990 through 2009 (last ten tests) were reviewed. There was no nozzle blockage identified in these tests.

In order to evaluate the vulnerability of having a CSS spray nozzle obstruction, condition reports (CR) related to the spray nozzles were reviewed. Five are relevant to this request:

- CR-1997-001947 (0/1/1997): During quarterly surveillance testing, blocking valve BV-80-40 was inadvertently opened allowing water to flow through the containment spray loop 111 header. Spray loop 111 feeds ring headers "C", "D" and "G." A walk down indicated no adverse impact on drywell equipment.

- CR-2000-003458 (10/4/2000): During a work order to replace a bent nozzle, other nozzles were closely inspected visually. A small piece of cloth was found protruding from one of the other nozzles on the "A" header. Some nozzles on the "A" header were removed in order to inspect the header using a video probe. A ¾" layer of material was found behind the cloth. CR-2000-003477 was written to document the condition. The material was sampled and found to have small particles of corrosion products in it. The ¾" layer was determined to be built up due to the cloth obstruction, but the origin of the material was not determined. The header pipe is made of galvanized steel and would not normally rust. The material was removed and the rest of the header was inspected and found to be clean. The apparent cause of the cloth being in the pipe was inappropriate Foreign Material Exclusion (FME) control. Since this incident, a more robust FME program was instituted.

- CR-2003-003535 (8/15/2003): When CSS loop 122 was being drained after a pump test. There was a procedural error resulting in the blocking valve being open. It was determined that approximately 80 gallons had drained through the drywell spray headers. The procedural error was corrected and subsequent testing did not indicate any evidence of corrosion products being discharged from the nozzles as a result of this event.

- CR-2004-002253 (5/2/2004): This CR was initiated to investigate a small (1/16") hole drilled in a pipe plug in the lowest ring header ("A") of the drywell containment spray system. The hole was drilled into the header as a drain point. The issue was dispositioned as acceptable as is.

From the review of these CRs, it can be concluded that events that could affect nozzle flow have been infrequent and of minor impact. The one exception to this was the obstruction of a single nozzle due to the FME.

The CSS in the drywell and torus is expected to be dry from the air-operated isolation valves located outside of the drywell through to the spray nozzles. During plant operation, the drywell and torus are inerted with nitrogen. The CSS pumps are normally shut off and the piping drained, except during quarterly pump testing or when the system is used for torus cooling. The CSS blocking valves are tested for stroke timing periodically, but with the system drained. The quarterly pump testing and torus cooling are performed with the blocking valves shut. That is the only time when there is water against the blocking valves. If water leaks past the blocking valves during pump testing, the water would drain out of the nozzles and the drain hole (in ring header "A") and the headers would be dried by the nitrogen environment. Any large leak would be indicated by increased drywell leakage as identified by the drywell floor drains and corrective action would be taken. The majority of the piping in the drywell is galvanized and therefore will not produce corrosion products even if wet (see Attachment 6). The piping in the torus is carbon steel, but all nozzles point downward and water would not remain in the pipes. With the nitrogen environment, conditions do not exist for prolonged corrosion generation in the drywell or torus spray system piping. In 2003, there was one inadvertent draining of the CSS into the spray headers (see CR-2003-003535 above). Since 2003, there have been three refueling outage air tests with no degraded flow observed.

The only credible event that could result in the blocking of a nozzle would be maintenance that could introduce foreign material into the CSS piping or other maintenance in the drywell or torus that could cause debris to fall onto nozzles. The spray nozzles in the drywell and torus are pointed downward except for those on the lowest drywell header ring, which is ring header "A" on elevation 245 feet. These nozzles are pointed slightly above horizontal. The nozzles, though open at the end, have a flared spray piece over the nozzle orifice (reference Attachment 3). Any debris coming down from above would be expected to be deflected away from the orifice unless it was sufficiently small to fall past the spray piece. Any

material that was large enough to clog an orifice would not be expected to enter the nozzle. It would sit on top until it was removed by the spray. The nozzles that are oriented downward would not be able to have debris enter from below. There is no credible event that could block a header unless large debris was introduced. That can only be done during maintenance activities, which include appropriate FME controls.

Procedure CNG-MN-1.01-1001, Foreign Material Exclusion, developed using industry guidance and operating experience documents, is in place to prevent the introduction of foreign material into the CSS. When maintenance or repairs are performed on the drywell or torus spray system or on other connected systems that could result in obstruction of the spray nozzles or headers, the Foreign Material Exclusion (FME) Program ensures that system cleanliness is maintained. Procedure CNG-MN-1.01-1001 includes criteria for establishing FME areas, steps to take if FME control is lost, and guidance for FME retrieval. FME areas are clearly marked and material accountability is assured through logs and securing of loose items and tools. FME barriers and covers are used except when performing necessary operations. The FME controls require post maintenance verification of system cleanliness and freedom from foreign materials. If any material is unaccounted for in an FME area or a general FME concern is observed, a condition report is initiated. The corrective action program would then provide for a determination of the scope of the issue, the actions necessary to return the area to the required level of cleanliness, and whether testing is necessary.

The requirement to test the headers will be removed as well as the type of test to be used. Since the opening within the pipes is much larger than the nozzles, they are not likely to become obstructed unless the nozzles become obstructed. Nozzle testing after maintenance that would affect the nozzles would ensure the headers are also clear of obstruction. Using air as the test method may not always be the most appropriate method for detecting nozzle blockage. In some cases, using another method, such as a fiber-optic device, may be appropriate. By deleting reference to the spray headers and the use of air as a test method, the proposed change will be more consistent with the Standard TS (Reference 1), SR 3.6.1.7.4.

In summary, industry experience (from the precedents listed in Section 4.2) and previous NMP1 testing have shown that drywell and torus nozzle or header blockage is unlikely since the nozzles and pipes are a passive design and the system is kept in a normally dry state. The proposed test frequency will continue to provide confidence that an unobstructed flow path is available and will preclude the need for unnecessary testing when no activities have occurred that would introduce debris into the nozzles or pipes and no active degradation mechanism is present. Testing at the proposed frequency would reduce outage dose and improve personnel safety. Verification that the headers are unobstructed would still be accomplished with nozzle testing as required. The deletion of the type of test (e.g., air) performed will be more reflective of the Standard TS SR and allow use of other means that may be more appropriate.

4.0 REGULATORY EVALUATION

4.1 Applicable Regulatory Requirements/Criteria

Nine Mile Point Unit 1 (NMP1) was constructed before the General Design Criteria of 10 CFR Part 50 were promulgated. However, when Niagara Mohawk Power Corporation (NMPC), then the licensee for NMP1, petitioned the Atomic Energy Commission (AEC) to convert the NMP1 provisional operating license (POL) to the full-term operating license (FTOL), assessments were provided relative to the General Design Criteria (GDC) (Reference 2). The criteria that pertain to the CSS include Criterion 38 - Containment Heat Removal; Criterion 39 - Inspection of Containment Heat Removal System; and

Criterion 40 - Testing of Containment Heat Removal System. The assessments for these criteria are currently discussed in Section VII-B of the NMP1 Updated Final Safety Analysis Report.

The CSS is designed to prevent overheating and over pressurization of the containment, reduce drywell airborne fission product concentrations, and control the pressure suppression chamber water temperature following a design basis LOCA. The system is designed to provide heat removal capabilities for vessel leaks up to and including the DBA, the double-ended break of a reactor recirculation line, without core spray system operation. The system operability requirements, combined with the requirement to perform post-maintenance testing to verify system operability, minimize the potential for nozzle and header obstruction and provide confidence that the system can perform its intended functions. Therefore, the proposed revision to the surveillance requirement frequency to verify spray nozzles are unobstructed "following maintenance that could result in nozzle blockage" is consistent with applicable regulatory criteria.

Based on the considerations discussed above, (1) there is reasonable assurance that the health and safety of the public will not be endangered by operation in the proposed manner; (2) such activities will be conducted in compliance with the Commission's regulations; and (3) the issuance of the requested license amendment will not be inimical to the common defense and security or to the health and safety of the public.

4.2 Precedent

Similar changes to the frequency of nozzle testing have been approved for the following plants:

Nine Mile Point Unit 2, approved February 11, 2008
Arkansas Nuclear One, Unit 2, approved July 2, 2007
R. E. Ginna Nuclear Power Plant - approved July 31, 2006
Comanche Peak Steam Electric Station, Units 1 and 2 - approved September 23, 2005
Vermont Yankee Nuclear Power Station - approved September 20, 2005
Crystal River Unit 3 - approved August 4, 2005
Millstone Power Station, Unit 3 - approved May 31, 2005
Pilgrim Nuclear Power Station - approved April 12, 2005
Calvert Cliffs Nuclear Power Plant, Units 1 and 2 - approved April 8, 2004
Byron Station, Units 1 and 2 - approved September 22, 2003
South Texas Project, Units 1 and 2 - approved August 20, 2003
Beaver Valley Power Station, Units 1 and 2 - approved February 24, 2003
Palisades Plant - approved February 24, 2003
Braidwood Station, Units 1 and 2 - approved February 20, 2003
Surry Power Station, Units 1 and 2 - approved December 10, 2002
Salem Nuclear Generating Station, Units 1 and 2 - approved October 10, 2002
North Anna Power Station, Units 1 and 2 - approved October 1, 2002
H. B. Robinson Steam Electric Plant, Unit 2 - approved September 19, 2002
Clinton Power Station, Unit 1 - approved March 28, 2002
Perry Nuclear Power Plant, Unit 1 - approved June 29, 2000

4.3 Significant Hazards Consideration

Nine Mile Point Nuclear Station, LLC (NMPNS) is requesting an amendment to Renewed Facility Operating License DPR-63 for Nine Mile Point Unit 1 (NMP1). The proposed amendment would change the NMP1 Technical Specifications (TS) by changing the testing frequency for drywell and torus spray nozzles specified in TS Surveillance Requirement (SR) 4.3.7.b from "once per operating cycle" to "following maintenance that could result in nozzle blockage." The requirement to test the headers would be removed, as well as the type of test to be performed.

NMPNS has evaluated whether or not a significant hazards consideration is involved with the proposed amendment by focusing on the three standards set forth in 10 CFR 50.92, "Issuance of amendment," as discussed below:

1. Does the proposed change involve a significant increase in the probability or consequences of an accident previously evaluated?

   Response: No.

   The proposed change modifies the SR to verify that the Containment Spray System (CSS) drywell and torus spray nozzles are unobstructed after maintenance that could introduce material resulting in nozzle blockage. The requirement to test the headers will be removed as well as the type of test to be used. Since the opening within the pipes is much larger than the nozzles, they are not likely to become obstructed unless the nozzles become obstructed. The spray nozzles and headers are not assumed to be initiators of any previously analyzed accident. Therefore, the proposed change does not increase the probability of any accident previously evaluated. The spray nozzles are used in the accident analyses to mitigate design basis accidents. The revised SR to verify system operability following maintenance is considered adequate to ensure operability of the CSS. Since the system will still be able to perform its accident mitigation function, the consequences of accidents previously evaluated are not increased.

   Therefore, the proposed change does not involve a significant increase in the probability or consequences of an accident previously evaluated.

2. Does the proposed change create the possibility of a new or different kind of accident from any accident previously evaluated?

   Response: No.

   The proposed change revises the SR to verify that the CSS nozzles are unobstructed after maintenance that could result in nozzle blockage. The requirement to test the headers will be removed as well as the type of test to be used. The spray nozzles and headers are not assumed to be initiators of any previously analyzed accident. The change does not introduce a new mode of plant operation and does not involve a physical modification to the plant. The change will not introduce new accident initiators or impact the assumptions made in the safety analysis.

   Therefore, the proposed change does not create the possibility of a new or different kind of accident from any accident previously evaluated.

3. Does the proposed change involve a significant reduction in a margin of safety?

Response: No.

The proposed change revises the frequency for performance of the SR to verify that the CSS nozzles are unobstructed. The frequency is changed from "once per operating cycle" to "following maintenance that could result in nozzle blockage." The requirement to test the headers will be removed as well as the type of test to be used. The revised testing requirement, along with the foreign material exclusion program, the normal environmental conditions for the system, and the remote physical location of the spray nozzles, provide assurance that the spray nozzles and headers will remain unobstructed. As the spray nozzles and headers are expected to remain unobstructed and able to perform their post-accident mitigation function, plant safety is not significantly affected.

Therefore, the proposed change does not involve a significant reduction in a margin of safety.

Based on the above, NMPNS concludes that the proposed amendment does not involve a significant hazards consideration under the standards set forth in 10 CFR 50.92(c), and, accordingly, a finding of "no significant hazards consideration" is justified.

4.4 Conclusions

In conclusion, based on the considerations discussed above, (1) there is reasonable assurance that the health and safety of the public will not be endangered by operation in the proposed manner, (2) such activities will be conducted in compliance with the Commission's regulations, and (3) the issuance of the amendment will not be inimical to the common defense and security or to the health and safety of the public.

5.0 ENVIRONMENTAL CONSIDERATION

A review has determined that the proposed amendment would change a requirement with respect to installation or use of a facility component located within the restricted area, as defined in 10 CFR 20, or would change an inspection or surveillance requirement. However, the proposed amendment does not involve: (i) a significant hazards consideration, (ii) a significant change in the types or significant increase in the amounts of any effluent that may be released offsite, or (iii) a significant increase in individual or cumulative occupational radiation exposure. Accordingly, the proposed amendment meets the eligibility criterion for categorical exclusion set forth in 10 CFR 51.22(c)(9). Therefore, pursuant to 10 CFR 51.22(b), no environmental impact statement or environmental assessment need be prepared in connection with the proposed amendment.

6.0 REFERENCES

1. NUREG-1434, Standard Technical Specifications General Electric Plants, BWR/6, Vol. 1, Revision 3.0, SR 3.6.1.7.4.

2. Technical Supplement to Petition for Conversion from Provisional Operating License to Full-Term Operating License, dated July, 1972, Section III, Adequacy Relative to Current Standards.

ATTACHMENT 1

PROPOSED TECHNICAL SPECIFICATION CHANGES (MARK-UP)

The current version of the following NMP1 Technical Specification (TS) page has been marked-up by hand to reflect the proposed changes:

159

LIMITING CONDITION FOR OPERATION

3.3.7 CONTAINMENT SPRAY SYSTEM

Applicability:

Applies to the operating status of the containment spray system.

Objective:

To assure the capability of the containment spray system to limit containment pressure and temperature in the event of a loss-of-coolant accident.

Specification:

a. During all reactor operating conditions whenever reactor coolant temperature is greater than 215°F and fuel is in the reactor vessel and primary containment integrity is required; each of the two containment spray systems and the associated raw water cooling systems shall be operable except as specified in 3.3.7.b.

b. If a redundant component of a containment spray system becomes inoperable, Specification 3.3.7.a shall be considered fulfilled, provided that the component is returned to an operable condition within 15 days and that the additional surveillance required is performed.

SURVEILLANCE REQUIREMENT

4.3.7 CONTAINMENT SPRAY SYSTEM

Applicability:

Applies to the testing of the containment spray system.

Objective:

To verify the operability of the containment spray system.

Specification:

The containment spray system surveillance shall be performed as indicated below:

a. Containment Spray Pumps

(1) At least once per operating cycle, automatic startup of the containment spray pump shall be demonstrated.

(2) At least once per quarter, pump operability shall be checked.

b. Nozzles

~~At least once per operating cycle~~ ~~an air~~ test shall be performed on the spray ~~headers and~~ nozzles.

Following maintenance that could result in nozzle blockage,

ATTACHMENT 2

PROPOSED TECHNICAL SPECIFICATION BASES CHANGES (MARK-UP)

The proposed NMP1 Technical Specifications Bases changes (page 163) are provided for information only.

In conjunction with containment spray pump operation during each operating cycle, the raw water pumps and associated cooling system performance will be observed. The containment spray system shall be capable of automatic initiation from simultaneous low-low reactor water level and high containment pressure. The associated raw water cooling system shall be capable of manual actuation. Operation of the containment spray system involves spraying water into the atmosphere of the containment. Therefore, periodic system tests are not practical. Instead separate testing of automatic containment spray pump startup will be performed during each operating cycle. During pump operation, water will be recycled to the suppression chamber. Also, air tests to verify that the drywell and torus spray nozzles and associated piping are free from obstructions will be performed each operating cycle. Design features are discussed in Volume I, Section VII-B.2.0 (page VII-19)*. The valves in the containment spray system are normally open and are not required to operate when the system is *called upon to operate.*

The test interval between operating cycle results in a system failure probability of 1.1×10^{-6} (Fifth Supplement, page 115)* and is consistent with practical considerations. Pump operability will be demonstrated on a more frequent basis and will provide a more reliable system.

*FSAR

following maintenance that could result in nozzle blockage. As an alternative, a visual inspection (e.g., boroscope) of the nozzles or piping could be utilized in lieu of an air test if a visual inspection is determined to provide an equivalent or more effective post-maintenance test. A visual inspection may be more effective if the potential for material intrusion is localized and the affected area is accessible. Maintenance that could result in nozzle blockage would be those maintenance activities on any loop of the containment spray system where the Foreign Material Exclusion program controls were deemed ineffective. For activities such as valve repair/replacement, a visual inspection would be the preferred post-maintenance test since small debris in a localized area is the most likely concern. An air test may be appropriate following an event where a large amount of debris potentially entered the system.

ATTACHMENT 3

GRINNELL PROTECTOSPRAY NOZZLE

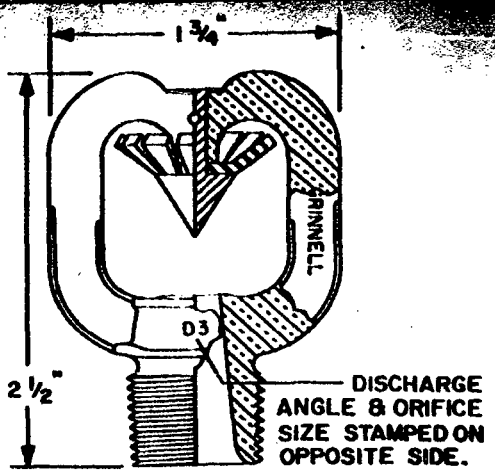

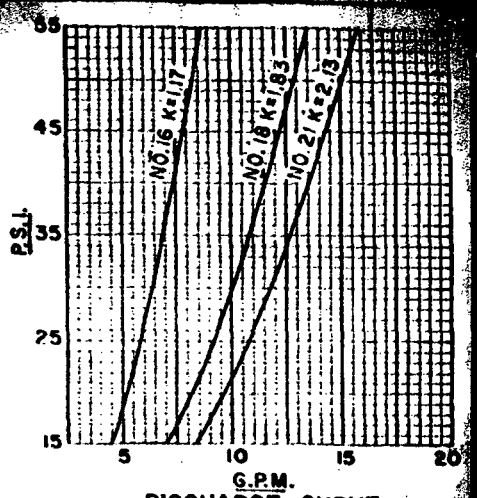

DISCHARGE CURVE

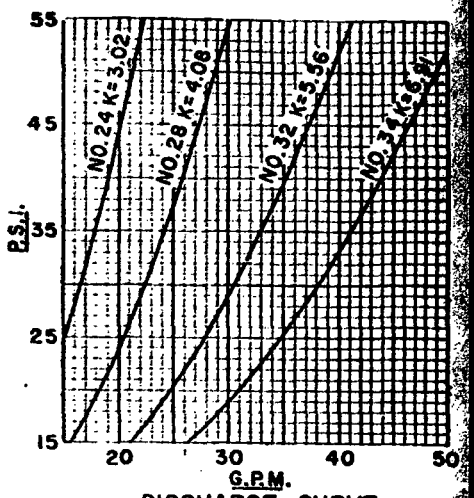

DISCHARGE CURVE

INCLUDED ANGLE OF DISCHARGE PATTERN:

65°	80°	95°	110°
125°	140°	160°	180°

ORIFICE SIZE: ORIFICE SIZES ARE IDENTIFIED BY NUMERICAL DESIGNATIONS. NUMERICAL DESIGNATIONS AND THEIR DECIMAL INCH EQUIVALENTS ARE AS FOLLOWS:

NO. 16 -.206"	NO. 28 -.375"
NO. 18 -.250"	NO. 32 -.438"
NO. 21 -.281"	NO. 34 -.500"
NO. 24 -.328"	

PIPE THREAD CONNECTION: ½" NPT.

MATERIAL & FINISH; BRASS - PLAIN, LEAD COATED, TEFLON COATED OR CHROME PLATED. STAINLESS STEEL-PLAIN ONLY. FURNISHED IN BRASS WITH PLAIN FINISH UNLESS OTHERWISE SPECIFIED.

TO ORDER SPECIFY:
GRINNELL (SPECIFY MATERIAL & FINISH IF OTHER THAN PLAIN BRASS IS REQUIRED) PROTECTOSPRAY NOZZLE, TYPE D3, (ANGLE OF DISCHARGE PATTERN), NUMBER (ORIFICE SIZE).----------(QUANTITY)

GRINNELL
PROTECTOSPRAY NOZZLE
TYPE D3 (BRASS & STAINLESS STEEL)

ATTACHMENT 4

SPRAYING SYSTEMS COMPANY FULLJET NOZZLE

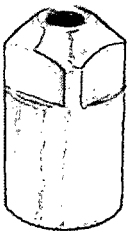

One-piece body
3/4" to 1" NPT or BSPT (F)

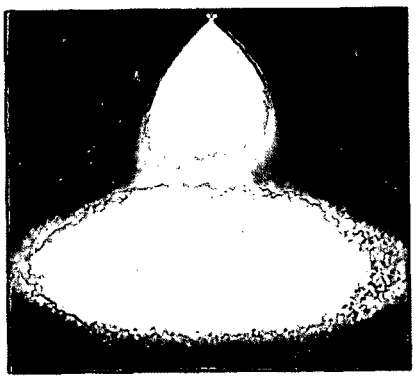

ATTACHMENT 5

DRYWELL SPRAY HEADER SCHEMATIC

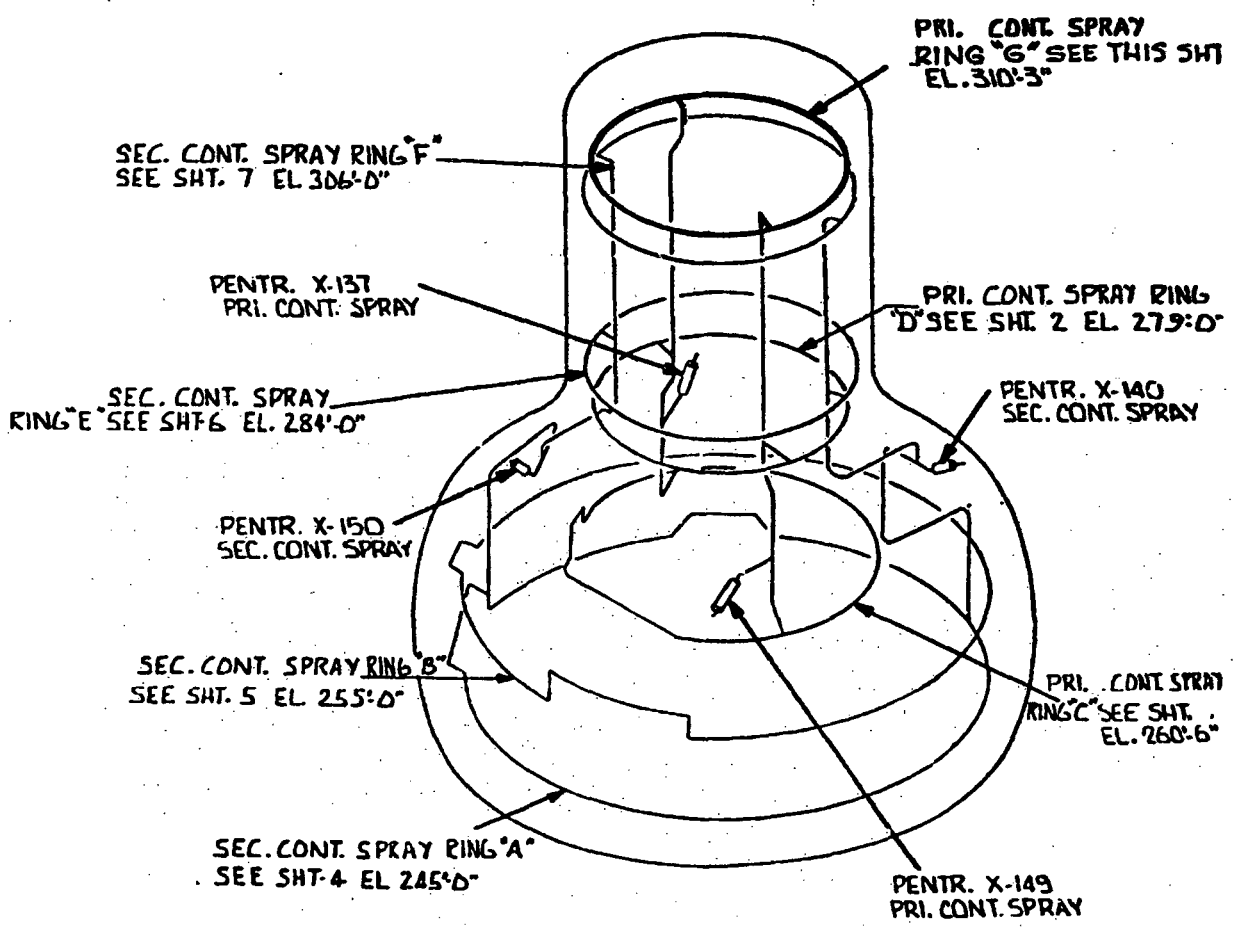
PRI. CONT. SPRAY RING "G" SEE THIS SHT EL. 310'-3"
SEC. CONT. SPRAY RING "F" SEE SHT. 7 EL 306'-0"
PENTR. X-137 PRI. CONT. SPRAY
PRI. CONT. SPRAY RING "D" SEE SHT. 2 EL. 279'-0"
SEC. CONT. SPRAY RING "E" SEE SHT 6 EL. 284'-0"
PENTR. X-140 SEC. CONT. SPRAY
PENTR. X-150 SEC. CONT. SPRAY
SEC. CONT. SPRAY RING "B" SEE SHT. 5 EL. 255'-0"
PRI. CONT. SPRAY RING "C" SEE SHT. EL. 260'-6"
SEC. CONT. SPRAY RING "A" SEE SHT 4 EL 245'-0"
PENTR. X-149 PRI. CONT. SPRAY

ATTACHMENT 6

CONTAINMENT SPRAY PIPING AND NOZZLE SIZES

ATTACHMENT 6
CONTAINMENT SPRAY PIPING AND NOZZLE SIZES

Primary Loop – Drywell: Two pumps
Three ring headers

	Description	Length (ft)/ Quantity	Diameter (in)	Material	Location
Train "A"	Feed pipe from Cont. Spray Pump #111	32-1/2	12	Seamless schedule #40 carbon steel, A333, GR6	
		8-1/4	12	Galvanized schedule #80 carbon steel	
Train "C"	Feed pipe from Cont. Spray Pump #112	23-3/4	12	Seamless schedule #40 carbon steel, A333, GR6	
		12-1/2	12	Galvanized schedule #80 carbon steel	
Ring Header "C"	Header Pipe	127	6	Galvanized schedule #80 carbon steel	Drywell Elev. 260', 6"
	Nozzles	84 **	1/2	Stainless steel	
Ring Header "D"	Header Pipe	112	2	Galvanized schedule #80 carbon steel	Drywell Elev. 279'
	Nozzles	8 **	1/2	Stainless steel	
Ring Header "G"	Header Pipe	99	1-1/2	Galvanized schedule #80 carbon steel	Drywell Elev. 310'
	Nozzles	10 *	3/8	Stainless steel	

Spray Nozzles: * 3/8" Grinnell Type D3, No. 28 – 0.375"
** 1/2" Grinnell Type D3, No. 34 – 0.500"

Secondary Loop – Drywell: Two pumps
Four ring headers

	Description	Length (ft) / Quantity	Diameter (in)	Material	Location
Train "B"	Feed pipe from Cont. Spray Pump #121	32-1/2	12	Seamless schedule #40 carbon steel, A333, GR6	
		8-1/4	12	Galvanized schedule #80 carbon steel	
Train "D"	Feed pipe from Cont. Spray Pump #122	26-1/2	12	Seamless schedule #40 carbon steel, A333, GR6	
		6-1/4	12	Galvanized schedule #80 carbon steel	
Ring Header "A"	Header Pipe	211	4	Galvanized #80 carbon steel	Drywell Elev. 245'
	Nozzles	42 **	1/2	Stainless steel	
Ring Header "B"	Header Pipe	193	4	Galvanized #80 carbon steel	Drywell Elev. 255'
	Nozzles	42 **	1/2	Stainless steel	
Ring Header "E"	Header Pipe	98-1/4	2	Galvanized #80 carbon steel	Drywell Elev. 284'
	Nozzles	8 **	1/2	Stainless steel	
Ring Header "F"	Header Pipe	99-3/8	2	Galvanized #80 carbon steel	Drywell Elev. 306'
	Nozzles	10 *	3/8	Stainless steel	

Spray Nozzles: * 3/8" Grinnell Type D3, No. 28 – 0.375"
** 1/2" Grinnell Type D3, No. 34 – 0.500"

Torus Loop: Two pumps
One ring headers

	Description	Length (ft) / Quantity	Diameter (in)	Material	Location
Header pipe from Pump #121	Feed pipe from Cont. Spray Pump #121	7/8	12	Seamless schedule 40 carbon steel, A333, G6	Torus
		260-1/4	3	Seamless schedule 40 carbon steel, A333, G6	
		24-1/2	4	Seamless schedule 40 carbon steel, A333, G6	
Header pipe from pump #112	Feed pipe from Cont. Spray Pump #112	7/8	12	Seamless schedule 40 carbon steel, A333, G6	Torus
		293-1/2	3	Seamless schedule 40 carbon steel, A333, G6	
		24-1/2	4	Seamless schedule 40 carbon steel, A333, G6	
Torus Header Ring	Header Pipe	387-1/2	4	Seamless schedule 40 carbon steel, A333, G6	Torus
	Nozzles	40*	15/64	Stainless steel	

Spray Nozzles: * Spraying Systems Company, Model 1H4.2, Fulljet Nozzle