Official Transcript of Proceedings

NUCLEAR REGULATORY COMMISSION

Title: Advisory Committee on Reactor Safeguards
Subcommittee on EPR

Docket Number: (n/a)

Location: Rockville, Maryland

Date: Friday, February 19, 2010

Work Order No.: NRC-069 Pages 1-287

NEAL R. GROSS AND CO., INC.
Court Reporters and Transcribers
1323 Rhode Island Avenue, N.W.
Washington, D.C. 20005
(202) 234-4433

UNITED STATES OF AMERICA

NUCLEAR REGULATORY COMMISSION

+ + + + +

ADVISORY COMMITTEE ON REACTOR SAFEGUARDS (ACRS)

+ + + + +

SUBCOMMITTEE ON EPR

+ + + + +

FRIDAY,

FEBRUARY 19, 2008

+ + + + +

ROCKVILLE, MARYLAND

+ + + + +

The Subcommittee met at the Nuclear Regulatory Commission, Two White Flint North, Room T2B1, 11545 Rockville Pike, at 8:30 a.m., DR. DANA POWERS, Chairman, presiding.

MEMBERS PRESENT:

DANA POWERS, Chairman

GEORGE E. APOSTOLAKIS

WILLIAM J. SHACK

JOHN W. STETKAR

NRC STAFF PRESENT:

DEREK WIDMAYER, Cognizant Staff Engineer

GETACHEW TESFAYE

PROSANTA CHOWDHURY

HANH PHAN

THERESA CLARK

ED FULLER

LYNN MROWCA

JIM XU

MOHSEN KHATIB-JAHBAR

DON DUBE

LYNN MROWCA

JOSEPH COLACCINO

ALSO PRESENT:

SANDRA SLOAN

DARRELL GARDNER

VESNA DIMITRIJEVIC

VINCENT CORDOLIANI

BOB ENZINNA

DAVID GERLITS

ROBERT MARTIN

NISSIA SABRI-GRATIER

JOSHUA REINERT

JIM FULFORD

TABLE OF CONTENTS

AGENDA ITEM	PAGE
1. Introduction - Dr. D. Powers, ACRS	4
2. NRC Staff Introduction - G. Tesfaye, NRO	38
3. U.S. EPR DC APPLICATION FSAR Chapter 19, PRA and Severe Accident Evaluation (continued) - V. Dimitrijevic, N. Sabri-Gratier, D. Gerlits, R. Martin, AREVA NP	4
4. U.S. EPR DC APPLICATION FSAR Chapter 19, PRA and Severe Accident Evaluation (continued) - AREVA NP	172
5. U.S. EPR DC SER with Open Items for Chapter 19, PRA and Severe Accident Evaluation - G. Tesfaye, P. Chowdhury, T. Clark, H. Phan, E. Fuller, J. Xu, NRO	114
6. U.S. EPR DC SER with Open Items for Chapter 19, PRA and Severe Accident Evaluation (continued) - NRO	248

P-R-O-C-E-E-D-I-N-G-S

(8:30 a.m.)

1. INTRODUCTION

CHAIR POWERS: Let's get back into session. We're continuing our meeting of the Subcommittee for the certification of EPR and the R-COLA. And we are going to bind up some loose ends that were left over from yesterday concerning both the RAP and a couple of questions that arose on the PRA. And then we are going to move to the staff presentation on this first part of the PRA.

I think it is evident we are not going to get through the whole planned exercise at this meeting because I do intend to shut off sometime between 4:00 and 4:30, but I think we are going to end up with a good basis for figuring out where we go from here.

And, with that introduction, I am going to turn it to Sandra. And she is going to tell me what we are doing here.

3. U.S. EPR DC APPLICATION FSAR CHAPTER 19, PRA AND SEVERE ACCIDENT EVALUATION (CONTINUED)

MS. SLOAN: Okay. Again, I'm Sandra Sloan from AREVA. We wanted to go back yesterday to

revisit RAP for a couple of reasons. One is to echo back what we think the questions are so that as we follow up on it, we have accurately captured what the concerns were and also trying to respond directly to at least one of the questions that you raised with more information.

As I heard it yesterday, there were three questions that came out of the RAP discussion. The first question was related to, is there a gap somewhere in the design continuum between what's in the DC RAP program versus what would be in the RAP program for the COL? That was one piece of it. And we'll talk about that in a little bit. We're going to address that with this slide.

The second part of the question that I heard was a question of treatment of systems versus components and how that is addressed, again between DC and COL.

The third piece of the question I think I heard was a question of implementation and details of how this is implemented over the design cycle. And I guess before we launch into talking directly addressing some of those questions, does that accurately reflect the questions that you had

yesterday?

CHAIR POWERS: It was pretty clear to me that the first two are correct. The third one I'm not sure that we've gotten that far.

MS. SLOAN: Okay.

CHAIR POWERS: It's clear systems versus components in DC RAP is an issue for us. And there is always this question of, are we going to end up with a gap or the potential for a gap between the DC RAP and the COL RAP? I mean, the answer is, of course, not.

We are going to insist that the COL RAP in the end has to be the operative one, but it's what he has to work with and to start with that is not entirely clear, of course. Okay?

MS. SLOAN: Okay. So what I would like to do, then, I'm going to turn it over to Darrell Gardner to walk through this slide that we have prepared that I hope better illustrates what in words we were trying to say. I always believe a picture is worth 1,000 words.

So maybe, Darrell, if you could walk us through this particular slide?

MR. GARDNER: Sure.

CHAIR POWERS: I have to say right off the bat I think we understood this slide. Okay? I mean, we understood the writing. We understood that list. It's what? I don't remember where it is. It's line 3.

MEMBER STETKAR: Line 3 in the last column --

CHAIR POWERS: Yes.

MEMBER STETKAR: -- I think is the focus.

CHAIR POWERS: Is the focus.

MEMBER STETKAR: Is the focus, right, for the moment.

MR. GARDNER: So we'll skip past the other parts, then, just simply get to that in terms of what's happening in this phase one piece that is predominantly identification of the list and the outline of the goals of the program.

So in this particular phase, which is performed in the design certification phase, there are two approaches to identifying the list of components, as we discussed yesterday. It's the PRA-based approach, which will identify those things modeled in the PRA that were risk-significant; as well as the expert panel approach, which would

deterministically conclude systems that were imported, risk-significant, based on the panels' deliberations.

What you end up with is a conservative list of systems that are then identified in the design certification, as within the scope of the RAP. There is also a COL item that would then require the COL applicant to identify any additional things that would be site-specific in terms of systems that are not already within the scope of the design certification.

So those are additional items such that when you saw the design certification list combined with the list that's in the COL, you have the list. And the list would be a conservative list because it's done at the system level.

So, in other words, if you were to pick a system, if that system is identified, all the components are in, within the scope of the RAP. So in that way, there is not a gap in terms of components being left off.

MEMBER APOSTOLAKIS: If you have a PRA and you do what you just said and you have the expert partner and you have the other additions that you

mentioned, how many components will be left out?

MR. GARDNER: We don't believe there are any components that are left out.

MEMBER APOSTOLAKIS: Okay.

MEMBER SHACK: You mean all the components in the plant?

MEMBER APOSTOLAKIS: Then all the components in the plant are under wrap?

MS. SLOAN: No.

MR. GARDNER: Well, not every system is listed. And I think --

MEMBER APOSTOLAKIS: It's tough for me to see what would be left out after you do all of this.

MR. GARDNER: Derek, were you able to distribute --

MEMBER SHACK: There are 34 sheets with about 5 components per sheet.

MR. WIDMAYER: Yes, I did. I gave supplement 1 to 226 to each of the members.

MR. GARDNER: So there are two tables in that supplement. One supplement is the list that came from that first step. This is the PRA, which is several sheets. There is another sheet that is a system-based list from the expert panel. I think if

you look at that system -- there is a fair number of systems, but it is not every system in the plant.

If you'll note, in the phase two, there are two components to phase two, which is still in design space. There is the part that the COL applicant is doing to add that extra piece we talked about.

After the COL license is issued, this is drawn in sort of a continuum. Obviously this could be done somewhat parallel, but the detailed design phase is where you're working into: detailed design, procurement, where that program gets in place.

MEMBER SHACK: That was a question I had yesterday. The EPR, when the combined license is issued, the reference COLA, will there be any DAC in that or this will be all ITAAC at that point? You know, how far will the detailed design go at the COL stage?

MS. SLOAN: I think that is really a separate question. And, in fact, as the DC applicant, I'm not sure we're at liberty to talk about that.

MEMBER SHACK: Okay.

MR. GARDNER: But to continue during this

detailed design phase, as a COL licensee who is implementing the program and that's where they implement the program that they then described in their FSAR; the generation of procurement specs; test specs; fabrication requirements; and, of course, the development of a plant-specific PRA, which will be representative of a final design. We get the insights there to then inform the list at a component level.

MEMBER APOSTOLAKIS: Just for clarification, the systems, structures, and components that are used in the PRA to show that you meet the goals are declared safety-related, aren't they?

MR. GARDNER: We need a PRA person to speak to that.

MS. SLOAN: Yes. I think we would need one of our PRA staff to address it. If not, we'll just have to follow up and find out the answer.

MS. DIMITRIJEVIC: Do you mean safety-related or safety-significant?

MEMBER APOSTOLAKIS: I mean safety-related according to the regulatory definition.

MS. DIMITRIJEVIC: No. I mean, we have in the PRA also components which are not safety-related in systems.

MEMBER APOSTOLAKIS: I thought the rule was that if you used something in the PRA to show that you meet the goals, these are all safety-related.

MS. DIMITRIJEVIC: No.

MEMBER SHACK: I think that is for the passive plants. They do the focused PRA.

MEMBER APOSTOLAKIS: Anyway, I mean, if a lot of you say no, there must be a reason.

MEMBER SHACK: Yes. You didn't do a focused PRA with just the safety-related components.

MS. DIMITRIJEVIC: No, no. We just did the normal PRA, which has a lot of non-safety-related components. However, in the definition of the safety components, sometimes the components, which are important in PRA, are to the deterministic principle, however safety components are determined.

MEMBER APOSTOLAKIS: I am pretty sure they are. They are. Okay. We'll find out.

MEMBER STETKAR: You know, for me this helps. I haven't had a chance to look at the list.

The list will actually help me much more when I sit down and take a look at that list and think about not only what's on it but at the moment what's not on it and what rationale might support what is not on it and then try to understand that if something is not currently on the list, where might it be added to the list or is there a good rationale for it not being on the list, combination of either insignificance in terms of the PRA and judged insignificance from the expert panel.

But I think we need a little bit, I certainly need a little bit, of time to just study now that we have the list, to study the list and get a better feel for it. And we just got it this morning, a half an hour or so ago.

MS. SLOAN: Okay. So maybe that helps --

CHAIR POWERS: As far as I can tell, all this does is confirm what we came out of yesterday thinking, corroborating at the systems level. And consequently when you identify a system, every component in there is on your -- a fairly heavy burden pulls on the more detailed design and the COLA.

MEMBER STETKAR: That's okay. As long as

the process is like this, that at this stage of the game, as long as we have some confidence, indeed, we have in a sense the master list, however that is characterized, and that that list becomes more refined and focused as the process proceeds, that there isn't a burden on the COL applicant except for site-specific issues to go expand the scope of that master list.

CHAIR POWERS: Yes. As far as I can tell, with no expansion of the scope, there may be some refinement.

MEMBER STETKAR: Yes. Refinement is fine. I mean, you know, that's the burden on the COL applicant because they're going to be developing programs.

CHAIR POWERS: I mean, it seems to me that what we had in this world is a lot of people with a fairly naive view on what they're getting out of the design certification process.

MEMBER STETKAR: Indeed, that might -- I don't know. We don't know what communications go on.

CHAIR POWERS: Press on.

MS. SLOAN: Okay. I think we'll switch over. We had a couple of follow-up. We had a couple

of questions yesterday related to PRA that we had hoped to follow on maybe about five minutes.

If the PRA staff who had the questions, if you could just identify yourself, repeat the question or what you think the question was and then respond?

MR. CORDOLIANI: Sure. Good morning. So, again, my name is Vincent Cordoliani. I've given my biography yesterday. So I've just been working with AREVA for three years in the EPR area.

So we had I think two further questions on the PRA. The first one had to do with, have we evaluated the impact of using the mean value of initiating events in the total CDF and especially the total LRF? I think that was the question.

And the second question was, how can we justify having a total plant-wide fire frequency which is lower than the NUREG-6850?

MEMBER STETKAR: Those are two questions, yes.

MR. CORDOLIANI: All right. So on the first one, the first thing I would like to say is that whenever we do the uncertainty declaration, I mean, at least that you saw in the chart, when we run

the model, the model actually utilizes the mean values as point estimates. They give you a point estimate, which is calculated using the mean values of all the initiating events as point estimates.

MEMBER STETKAR: Can I rephrase that a bit to make sure I understand what you're saying?

MR. CORDOLIANI: Yes.

MEMBER STETKAR: When you do the uncertainty analysis, you propagate through the model uncertainty distributions. And the quantification process from those uncertainty distributions calculates a mean value.

The mean value itself is not run through the model. The mean value is a calculated parameter of the overall uncertainty distribution.

MR. CORDOLIANI: Right. It is.

MEMBER STETKAR: Is that correct?

MR. CORDOLIANI: But then we also give you a point estimate. And that point estimate will be calculated using the -- in that one, they will use the mean values of the initiating event as point estimates to be consistent. So the point estimate that is created by that model will be already the point estimate given using the mean value of all the

initiating events that --

MEMBER STETKAR: Okay.

MR. CORDOLIANI: So that point estimate might be slightly different than the one using the point estimate model. And we have those numbers. And as far as core damage frequency is concerned, the difference is negligible to the point estimate place. We have 5.3-7.

As far as laboratory frequency, as we mentioned, it may be affected by the fact that some interfacing system LOCA initiating events have a mean value which is significantly higher than the point estimate. As far as laboratory frequency, there is a small but non-negligible impact. Instead of 2.6-8, we find something on the order of 2.8-8.

So, again, this is a point estimate calculated using the mean values.

MEMBER STETKAR: I understand what he's saying, but --

MEMBER APOSTOLAKIS: I didn't.

MEMBER STETKAR: Okay.

MEMBER APOSTOLAKIS: What is the total plant-wide frequency of fires?

MEMBER STETKAR: No, no, no. We didn't

get to that one yet. We're still on the point estimate versus mean versus mean versus --

MEMBER APOSTOLAKIS: I thought you were talking about --

MEMBER STETKAR: -- point estimate.

MEMBER SHACK: Let me make sure I think I understand. But you have calculated two point estimates. One you come up somewhere, but when you recalculate for the uncertainty calculation, it calculates a new point estimate based on the means of the distribution. And that is what fixes the cutsets. And then it works from there. Is that --

MEMBER STETKAR: Let me just cut to the quick here. There is no justification, period, for using anything other than the mean value of the uncertainty distribution when you quantify what you are calling the point estimate model, period. There is no justification.

So any ad hoc process that you're using to justify small differences between point estimates from the uncertainty calculation versus point estimates from the non-uncertainty calculation versus mean values versus other concepts of point estimates is simply not justified mathematically.

The strong recommendation from this committee is use the mean values from every uncertainty distribution that you create for every database variable in the study when you solve the original model to generate the cutsets.

MEMBER APOSTOLAKIS: But, John --

MEMBER STETKAR: And then there will be a small difference between the mean value that you quantify when you propagate the uncertainties. There will be a small difference because of the state-of-knowledge correlation in the model. There will be a small difference. Everybody is kind of aware of that.

But by actually solving the original model with the mean values from the uncertainty distributions for your database parameter values, you will then not face this question about possibly truncating cutsets and not populating the database. I mean, your discussion right now says that that truncation gives you essentially no error at the core damage frequency level and maybe a ten percent or a little bit less error at the large release frequency error.

There is no reason to have to sit here

and try to defend those numerical differences because the original calculation process is not fundamentally justified.

MS. DIMITRIJEVIC: Well, I just want to present to you an idea of the reason because mean value is not a characteristic which can be strongly associated with something if you don't have an infinite number of runs in Monte Carlo and always make sure that you have a seed.

So documenting mean value is not as easy as documenting point estimates because if you document mean value on something which runs 600,000 times --

MEMBER STETKAR: You know, Vesna, you have log-normal distributions specified for parameter values --

MS. DIMITRIJEVIC: That's true.

MEMBER STETKAR: -- in the documentation that I can read. I can actually have -- I can calculate the mean value of a log-normal distribution. That doesn't make any difference on the seed or the number of samples in a Monte Carlo run. That is a deterministic value.

All I'm saying is that if you have a

log-normal distribution with a median value of x and an error factor of y, then you know the mean value. That is the value that you should put in for you point estimate parameter value when you solve the cutsets.

Now, how closely if you try to replicate just that mean value, if you just try to replicate that one distribution, how closely you replicate that distribution depends on the seed and the number of samples that you use.

But that is mathematical. That is mechanics, if you will. That is not an excuse for not using the mean value.

MS. DIMITRIJEVIC: No, no. I understand now our differences, that initiating events which we are discussing here are not integrated in the model because they cannot be integrated in the models because the Risk Spectrum doesn't allow it to have the same basic event with the different time.

MEMBER STETKAR: And I have a simple little calculator that I can't do time intervals on either. That's your tool. That's not an excuse for --

MS. DIMITRIJEVIC: If you will just give

me a second?

MEMBER STETKAR: Sure.

MS. DIMITRIJEVIC: I will try to explain to you.

MEMBER STETKAR: All right.

MS. DIMITRIJEVIC: So initiating events are run separately to the main model because they cannot be run on the same model because of the difference of the mission time.

So, therefore, when we pick up the initiating event distribution to enter to the main model, we have to decide exactly on which seat and from how many runs so somebody where we ran this PRA can reproduce the same distribution. And since we are running this complicated fault tree for the loss of component cooling water, we can run over 60,000. And we try to stabilize.

It's always, this mean value is always, depending on the regional seed at Monte Carlo and not on the runs because we cannot run unlimited time of the runs.

MEMBER APOSTOLAKIS: For a point calculation, you don't need Monte Carlo at all, do you?

MS. DIMITRIJEVIC: Yes.

MEMBER STETKAR: Well, they do, actually, because what they're doing is they're solving --

MEMBER APOSTOLAKIS: Who?

MEMBER STETKAR: They're calculating an initiating event frequency by the solution of a fault tree model.

MEMBER APOSTOLAKIS: If I feed into the model just point values, then to get the point frequency or the minimal cutest, why do I need Monte Carlo? Only if I don't accept the propagation do I need the Monte Carlo.

In other words, your point earlier that I feed either a point value or a mean value, as far as the remaining calculations are concerned, it doesn't matter. It's just what you put in the model.

MEMBER STETKAR: That's right. I don't understand, for example, why you say you're not --

MEMBER APOSTOLAKIS: Another issue, though, John. Of course, I agree with you. I mean, that's the perennial problem we've had here, especially with some other representatives, who go out of their way to argue about point value.

But, again, for a design certification,

though, the regulatory requirement is category 1 of ASME, which I believe is based on point estimates. So from that perspective, maybe what they're doing is acceptable because there is no mention of uncertainty calculations in category 1.

MEMBER STETKAR: As long as, indeed, the results and a summary of the quality of the study acknowledge that all they're doing is a category 1 PRA.

MEMBER APOSTOLAKIS: Well, yes. You are absolutely right and --

MEMBER STETKAR: But say they are doing category 3 in terms of --

MEMBER APOSTOLAKIS: Well, I think we --

MEMBER STETKAR: -- initiating event frequencies and things.

MEMBER APOSTOLAKIS: I think that was a slight exaggeration, as you pointed out yesterday. So as far as category 1 is concerned, you can't really argue with them. But later on when we do a site-specific -- I mean, somebody else will do it.

MS. DIMITRIJEVIC: But we did the complete uncertainty runs with the mean values. We provided mean values in uncertainty. I'm not sure

about this --

MEMBER APOSTOLAKIS: But John's point is earlier, you know, because when you do the uncertainty propagation, you have already defined the set of minimal cutsets on which you will do it. And I think this question goes --

MS. DIMITRIJEVIC: I really don't believe it will affect, we don't really believe this will affect, the number of cutsets into the run.

MS. SLOAN: I guess I would suggest on the AREVA side unless we have --

MEMBER APOSTOLAKIS: That's something that cannot --

MS. SLOAN: -- something more to add to the discussion, then we should move on to try to answer the next question if --

MEMBER STETKAR: Part of the problem is it is conceivably not difficult to actually generate something you have reasonable confidence as a mean value.

MEMBER APOSTOLAKIS: Sure. Absolutely.

MEMBER STETKAR: In other words, quite honestly, I think we spent more money and more time in the last two days than the amount of effort it

would take to actually be careful about generating those mean values when you do the model solution.

MEMBER APOSTOLAKIS: So your concern is whether the set of minimal cutsets that are using the uncertainty calculation is the appropriate set because --

MEMBER STETKAR: Absolutely. And --

MEMBER APOSTOLAKIS: -- it is the result of a screening using point values.

MEMBER STETKAR: Absolutely. And I think what Vincent said this morning corroborates that a bit because he said, if I understand this -- make sure that I didn't misunderstand you -- that when you looked at the differences between the point estimate and the mean value, you had something on the order of roughly a ten percent difference in the large release frequency calculation, right?

MR. CORDOLIANI: Between the point estimate calculated using point estimate and initiating event frequencies and the point estimate calculated using mean value initiating event frequencies that we had less than ten percent difference?

MEMBER STETKAR: Did you resolve the

model and regenerate cutsets using the mean values or --

MR. CORDOLIANI: So, again, the difference is only like for those initiating events calculated using fault tree that one model would use point estimate. The other would use mean as point estimates.

MEMBER STETKAR: Okay.

MR. CORDOLIANI: And in that case, yes, we would calculate it.

MEMBER STETKAR: You regenerated the cutsets?

MR. CORDOLIANI: Right.

MEMBER STETKAR: Yes. Okay. So it's not a big difference, but it's measurable. So your point from a category 1 perspective, no big deal.

MEMBER APOSTOLAKIS: Yes.

MEMBER STETKAR: No big deal at all.

MEMBER APOSTOLAKIS: But, again, I strongly second the argument that Mr. Stetkar made. I mean, if the mean values are available, then those are the ones that should be used. This is an issue that has been discussed in this room or the room next door for years now. And I don't understand the

industry, why they insist on this point value calculation and they feel that if you talk about mean values, you're asking them to do a big deal. I mean --

MEMBER STETKAR: I think we have to be careful in -- I understand what you're saying, Vesna, about reproducibility and numerical precision, if you will, in the seven-significant-figure number that you call the mean value because if you're not careful about setting the seed and the number of samples, the fifth significant figure in that value is going to change.

On the other hand, it's more important to know that that value is closer to three than it is to two.

MEMBER APOSTOLAKIS: But still, though, John, all of this is related, it seems to me, to the truncation value you also used. Now, you mentioned yesterday that Risk Spectrum does some funny things that make it a little bit independent of the truncation because if the truncation is down to 10-13 or 14, the differences between point values and mean values, you will end up with a good set. I don't expect you to.

You said that there are some other things, which brings me to another point because Vesna has also said, but Risk Spectrum does risk. The tool cannot dictate what is being done. I mean, if the tool cannot do what is appropriate, then it should not be used, rather than saying we used the Risk Spectrum and Risk Spectrum cannot do the right thing, which I don't believe, by the way. I think, from what I hear, it is a good tool. I mean, it's not --

MEMBER STETKAR: I would rephrase that, George. I think that --

MEMBER APOSTOLAKIS: In proper English, John?

MEMBER STETKAR: I didn't quite -- you have a strong accent, but I don't --

(Laughter.)

CHAIR POWERS: For somebody who lives in Arkansas, that's not --

(Laughter.)

MEMBER STETKAR: I don't speak Arkansasian. Anyway, I wouldn't characterize it as saying that the tool has flaws, he shouldn't use the tool because every PRA tool out there has weaknesses.

I think that it's just important that when you characterize the results of the PRA, you acknowledge those weaknesses.

MEMBER APOSTOLAKIS: I agree. I agree.

MEMBER STETKAR: Because they all do. I mean, they all do some sort of truncation.

MEMBER APOSTOLAKIS: But to different levels of approximation. The argument, we didn't do it because the tool didn't allow us to do it, I have a problem with that kind of argument.

Anyway, I think we are talking too much now.

CHAIR POWERS: It strikes me that we understand what was done.

MS. SLOAN: Okay.

CHAIR POWERS: And we will formulate a proposal on exploring some of the mechanics and details of the PRA model in a separate meeting. And we'll do that sometime today.

MS. SLOAN: And we had a second response --

MEMBER STETKAR: The thing on the fire frequencies was the --

MS. SLOAN: Sure.

MR. CORDOLIANI: So the fire question, so we went and looked at plant-wide frequency of fire. And, as you said yesterday, for NUREG-6850, it's close to .3.

MEMBER STETKAR: Yes.

MR. CORDOLIANI: In our frequency, if we take out suppression because some of our frequencies have like factors accounting for suppression, like the turbine building, because it has automatic suppression. So we use a .1 factor. If you remove that suppression, our total fire frequency would be about .1, which is less than what the NUREG has.

We understand where those differences come from. And I can give you two examples. For instance, the actual cabinet fires, the frequency in the NUREG-6850 is 4.5-2. And our frequency happened to be less than that using RAI's paper, but if you look at the fire frequency from the NUREG-6850, it has been seen as conservative by many. I mean, it is an ongoing effort to resubmit that frequency.

And so that is one point that we -- the other points that we have some areas that we screen out; for instance, the emergency diesel generator buildings, which we basically -- we didn't include

that scenario in our fire analysis because it would only affect one diesel generator and due to physical separation, it would not even cause an initiating event. And the fire frequency for diesel generator is like 2.1-2. That is also part of the NUREG-6850. So by all those pieces together, we can expand the difference into total fire frequency.

Also, we have an RAI question, 223 I believe it is, where the staff asked us to do a sensitivity using NUREG-6850 fire frequencies. And the results that we show were like any other small inquiries in the CDF, about five percent.

So, even if the initiating frequency shows some differences, the risk result we show was not very significant.

MEMBER APOSTOLAKIS: Are you saying that the fundamental reason is that it's how you define a fire? In other words, what fires should the database include? Is that the fundamental argument you're making that if I relax my definitions and I include every fire in the world, then yes, I will come up with .25 or .3. But you guys say no, we didn't do that. We consider the fire --

MR. CORDOLIANI: I think it --

MEMBER APOSTOLAKIS: Is that what your fundamental argument is?

MR. CORDOLIANI: I think this is part of it, yes, but I'm not completely sure like there was a difference in the fire which, frankly, didn't -- the type we used was as stated in the NUREG-6850. There may be endpoints for those particular cabinet fires. It's possible that a very small fire range pertaining --

MEMBER APOSTOLAKIS: So essentially you're questioning what are the criteria they used to include fires in the NUREG and what you did. That's essentially what you're saying.

MR. CORDOLIANI: We're not questioning the NUREG. The thing is we --

MEMBER APOSTOLAKIS: Nobody would dare do that.

(Laughter.)

MR. CORDOLIANI: No.

MEMBER APOSTOLAKIS: John?

MEMBER STETKAR: I think I heard three -- I don't think it's as simple as just questioning the data in the NUREG. I think I heard sort of three different reasons presented. One was you mentioned

turbine building fires, and you took credit for a .1 suppression.

Okay. Let me just make sure I understand the three points. The second one is that with respect to the cabinet fire frequencies, in particular, that's an area where you seem to have some perhaps difference of opinion with the NUREG/CR-6850 frequency.

And the third was that, indeed, even if you accept the NUREG/CR-6850, there are some locations in the plant that you screened out; in particular, the diesel generator buildings, as not causing an initiating event.

So, even though if you have a fire there, you are not arguing with the frequency. You're just arguing about whether that fire in that building should be treated as an initiating event. Those are three sort of different philosophical --

MEMBER APOSTOLAKIS: But are we sure that the NUREG included those?

MEMBER STETKAR: Let me talk a little bit about those three. First of all, the NUREG says that you have a frequency and your fire analysis is supposed to evaluate the effectiveness of your

suppression, timing and effectiveness of the suppression.

So you're not supposed to just simply reduce the frequency of a fire by taking credit for suppression because that is part of the fire analysis process. You're implicitly putting a whole model in there in that .1 factor to reduce the frequency and then arguing about what gets burned.

MR. CORDOLIANI: If I may, we never said that we made a detailed NUREG-6850 fire analysis for design certification given the information we had. We made a more conservative --

MEMBER STETKAR: I'm just saying it should be if -- I'm not arguing with that thought process. I'm saying it should be more transparent, rather than just saying, well, we used a frequency of 10-5 -- I know you used the higher frequency. This is an absurd example. We used a frequency of 10-5 because we took credit for a factor of 1,000 in suppression. Say we used a frequency of 10-2 and in our simplified fire analysis we took credit for a factor of 1,000 for suppression. Make it clear.

Doing a simple analysis is okay, but don't hide the fact that you have taken credit for

suppression in a lower initiating event frequency unless you really document it now.

MR. CORDOLIANI: What I believe, in the FSAR tables, this is clearly stated. I don't have them with me.

MEMBER STETKAR: Okay. The second point on the cabinet fires is I think there is obviously a lot of controversy about cabinet fire frequencies and how the NUREG/CR-6850 groups together the things that they call electrical cabinets. There is a lot of discussion about that.

However, it is important to recognize that the process that was used in NUREG/CR-6850 by the people who generated those fire frequencies -- and it was generated primarily by EPRI through a fairly detailed review of operating experience. Those people assigned -- they did a screening process.

So the only fires that they retained were either fires that they deemed to be challenging or there was some uncertainty about whether they would be challenging. And if there something was deemed to be not challenging, it was thrown away.

If there was uncertainty about whether it

might be challenging, that event was assigned a weight of .5. So it was counted as half a fire. And any fire that was deemed to be challenging was counted as a fire.

So that the frequency already has been through some vetting process and screening process such that that frequency is ostensibly the frequency of fires that are challenging enough to damage some amount of equipment within the thing that they call a cabinet.

You have to be a little bit careful about saying, well, we're going to do yet another screening of those values because, quite honestly, the screening results in the decision process really aren't transparent in the NUREG/CR-6850 document that is available in backup.

So I would be a little bit cautious about the second thing in terms of saying, well, we don't have confidence in those cabinet fire frequencies. That is an area of ongoing concern. And it hasn't really reached -- you know, again, for your purpose doing a design certification fire analysis at this stage in 2009 or '10, it would be a little bit premature to second-guess where those cabinet fire

frequencies are going.

The third issue in terms of does a fire in a diesel generator room really cause an initiating event? Now, that is strictly up to the individual PRA model. You know, the NUREG/CR-6850 data and the frequencies make no judgment about whether a diesel generator fire will cause an initiating event. It is simply the diesel generator fire frequencies.

If the judgment of the EPR project team is that fires in those buildings will not, cannot cause an initiating event, there are no spurious signals that can be generated by any of the instrumentation and control signals that go out to the diesel. I don't even know what electrical stuff might be out there. It can come back into the plant and give you a trip.

If you've really thought about that process and concluded that you can really screen out those buildings, conceptually there is nothing wrong about that at all. You just need to make sure that you can justify that no initiating event can occur from any fire out there.

Sometimes that is a little bit difficult to do. Sometimes it's easier to just say, well,

we'll assume an initiating event can occur and see how important it is.

MEMBER APOSTOLAKIS: Can you remind me, Vincent, what your database was?

MR. CORDOLIANI: Well, initially we used the RES/OERAB/SO2-01. It's a research paper I think at the Idaho National Lab that only like take fire, a ten-year period. And we used that database because it gave fire frequencies based on generic locations, which we thought were more appropriate for our level of knowledge.

But during the RAI process, the staff actually asked us to compile it with NUREG-6850 because this data set may be too short to accurately -- so we did this comparison in RAI 223, and we showed a very small increase in core damage frequency.

MEMBER APOSTOLAKIS: Thank you.

MEMBER STETKAR: I think that helps. I'm glad it helps explain at least some of the differences there. This is another area where it's a little bit frustrating from our perspective because it seems in the whole PRA review, -- the staff will eventually get up here -- it asked an awful lot of

questions. And there seems to be a lot of information floating around in RAIs and responses to RAIs that we don't have.

I mean, as you mentioned, there was a question. You know, you responded to it. And there's sort of almost a side parallel set of calculations going on through this RAI and response process that makes our role just a little bit difficult.

CHAIR POWERS: Thank you. Now at this point, we are going to return back to the discussion of chapter 19, PRA and severe accidents. And we are going to hear from the staff.

MR. TESFAYE: Okay.

MR. TESFAYE: Good morning, Dr. Powers and everybody. My name again is Getachew Tesfaye. I am the lead project manager for EPR design certification project.

The staff has been patiently waiting to present their findings. They're ready. And at this time I would like to introduce the chapter project manager, Mr. Prosanta Chowdhury, to lead the staff's presentation. Prosanta?

MR. CHOWDHURY: Thank you, Getachew.

2. NRC STAFF INTRODUCTION

MR. CHOWDHURY: Good morning, everybody. My name is Prosanta Chowdhury. I am the NRO project manager responsible for coordinating staff review of FSAR chapter 19 of the U.S. EPR design certification application.

As for myself, my background, I have two Master of Science degrees: one in electrical engineering from Moscow, Russia in Russian language and one in nuclear engineering from Louisiana State University.

I have been with the NRC since April of 2005. Before that, from 1987 through 2005, I worked as an environmental scientist for the State of Louisiana Department of Environmental Quality Radiation Protection Program.

Also between 1996 and 2003 as a technical expert of the International Atomic Energy Agency, I conducted training and missions in various countries, mostly European countries, and reviewed several IAEA technical documents. And that's enough about myself.

The NRC technical staff involved with the safety review of U.S. EPR FSAR chapter 19 are presented here: Mr. Hanh Phan, -- Dr. Ed Fuller will

join us later -- Ms. Theresa Clark and Jim Xu. They are here to present the SER with open items. And they will be very happy to attempt to answer any questions you might have.

During this meeting, the staff plans to make a presentation of the chapter 19 SER with open items. Chapter 19 is divided into two main sections for this presentation: 19.1, Probabilistic Risk Assessment; and 19.2, Severe Accident Evaluation.

And for the purpose of today's presentation by the staff, the staff has chosen to group the review of these two sections as follows. PRA 19.1 is grouped in six areas. Those are shown on the display here: PRA quality; internal events; seismic margin assessment, also internal flooding, internal fires, other external events; and other modes of operation. Finally, application of PRA results in conclusion.

The severe accident evaluation section is grouped in five areas: severe accident prevention, severe accident mitigation, containment performance capability, accident management, consideration of potential design improvements and conclusion.

The staff will also provide the synopsis

of the EPRI approach. The staff issued a total of 371 questions to the applicant, requesting additional information, during the review process.

Out of 371 questions, there are 20 open items identified in the SER with open items. The staff will provide a detailed list of these open items as functional specific SER and application sections. The U.S. EPR chapter 19 SER with open items was issued as a publicly available document on January 27th, 2010.

And, with that, I now turn the presentation over to the lead technical reviewer, Mr. Hanh Phan, of the PRA and Severe Accidents Branch.

MR. PHAN: Thank you, Prosanta.

Gentlemen, good morning. My name is Hanh Phan, and I am the lead technical reviewer for EPR SER chapter 19. I am the senior PRA analyst in the NRO PRA Branch. I joined the NRC in 2006. Prior to that, I worked for the Idaho National Lab and Pacific Northwest National Lab, also at the Columbia Generating Station.

In my past, I developed internal events PRA, internal flooding PRA, seismic PRA, and also fire PRA. I also developed PRA for the hydropower

power plants in support of the Army Corps of Engineers. I also developed PRA applications, including risk-informed ISI, diesel AOT, and MSPI, SDP, and others.

In my past, I also served as a PRA peer reviewer. I did provide training on PRA quality. I have Master and a Bachelor in electrical engineering.

Prior to each presentation, the staff will describe in more details the review approach so that you will understand the depth of the reviews that we have performed.

In general, this slide shows you the steps that the staff has taken. I will focus on items 5, 7, and 10. In item 5, we say that we develop initial risk insights.

After the application docket in early 2008, the staff developed the risk insight from the PRA's perspective, including important systems and components and the measures assumptions in the PRA. And we shared that with all the technical branches.

At item 7, we state that we perform audits at the AREVA offices. The regulations do not require the applicant to submit that PRA. However, AREVA made their PRA documentation available for the

staff at the Twinbrook office.

The staff has conducted --

MEMBER APOSTOLAKIS: When you say, however, you don't mean that they did it because they are nice people? The regulation actually says, I think, that you have the right to go to their offices and review it.

MR. PHAN: Yes. When I say, however, because they have the document nearby our offices here. So that we easily --

MEMBER APOSTOLAKIS: You have the right to go to their offices and review the models, don't you?

MR. PHAN: Yes, sir.

MEMBER APOSTOLAKIS: Okay. This however was a little bit disturbing.

(Laughter.)

MR. PHAN: But we did totally 17 one-day audits at the office to look at their documentation.

MEMBER STETKAR: Seventeen one-day audits?

MR. PHAN: Yes.

MEMBER STETKAR: How many people participated in each of them on average? I don't

know if everyone --

MR. PHAN: Average from one to three to all of us.

MS. CLARK: Plus contractors.

MR. PHAN: Plus contractors.

MEMBER STETKAR: But they were simply one-day audits. So you only had one-day snapshots.

MS. CLARK: They were consecutive days as well. This is Theresa Clark from the staff.

MR. PHAN: But we count them as one day each when we prepared the audits report.

MEMBER STETKAR: Okay. During those audits, did you look at specific -- I would like to understand a little bit more what you did in the audits. And if you're going to go into the audits more during the presentation --

MR. PHAN: Yes, we will.

MEMBER STETKAR: Okay. I will be quiet and wait until you're --

MEMBER APOSTOLAKIS: I have a little broader question. What is your objective of doing all of this?

MR. PHAN: May I ask you more specific? On the audits or --

MEMBER APOSTOLAKIS: No. The review of the PRA. I understand that you want to make sure that it's a quality product, sure, all these questions and so on. But what are we trying to get out of reviewing the PRA for the design certification?

MR. PHAN: The staff focused on two areas. The first one is that the safety goals should be met with the CDF and the LRF and the CCDP.

MEMBER APOSTOLAKIS: Sure.

MR. PHAN: And, secondly, the staff looked at the risk insights. Theresa is showing me one of the slides on the conclusions regarding the expectation from the staff reviewing the PRA. The 10 CFR 52.47(a)(27) required that the description of the PRA and its result should be submitted. So the staff reviewed the description and the results.

Secondly, in the SRP, there are four items we have itemized here. The first one is to ensure the applicants uses the PRA results and insights to identify and establish the specifications and performance objectives.

The second one, identify major features and -- and I apologize, but I would turn to slide 27.

These are the SRPs, and this is the regulation that the staff wrote and used as the basis to conduct our review.

MEMBER APOSTOLAKIS: So basically understanding of the design?

MR. PHAN: Yes, sir.

MEMBER APOSTOLAKIS: And the last items on this slide is that the staff participated in the Multinational Design Evaluation Program we call MDEP. The objective of the MDEP PRA was to share information by the MDEP members, including U.S., Finland, France, and U.K. We had face-to-face meetings, and we shared the information through the electronic copies. We also identified the differences amongst the designs.

Next slide, please. This slide is to show you at the end of phase 2, the staff issued 24 RAIs with 316 questions regarding section 19.1 PRA. With that, we identified 15 open items: one on PRA quality, 7 on internal events PRA, 3 on the seismic margin assessment, one on the internal fires PRA, 2 on the level 2 during powers, and one on level 2 during shutdown.

Next one, please. For section 19.2,

severe accident evaluation. At the end of phase two, the staff issued 7 RAIs with 55 questions. Out of those five are open identifiers.

The staff will go over these open items later. So in the next three slides, 8, 9 and 10, is a listing of the description or the subject of the open items. I won't list them all at this point.

So, with that, the staff now wants to present to you the first topic of interest that related to the PRA quality. The applicant performed a self-assessment against the ASME PRA standard. And they document their conclusion in the tables 19.1-1 of their FSAR.

Recently, the applicant conducted a peer review using NEI's 05-04 process and the ASME PRA standard 2007. It is certainly noted in the staff's interim guidance to state that the peer review of the D.C. PRA is not required prior to the application. So the applicant did take an extra step to evaluate their PRA quality.

The peer review results show that out of 328 supporting requirements, 68 percent are characterized as met. Nine percent are not applicable. Thirteen percent are not met and not

achievable. And ten percent are not met because of the technical merits.

MEMBER STETKAR: Hanh?

MR. PHAN: Yes, sir?

MEMBER STETKAR: These summaries up here are cast in absolute terms, in terms of you say 68 percent met the applicable requirements. There is another dimension to that satisfaction, which means they met the applicable requirements for which capability category.

When you say 68 percent of the technical areas met the requirements, is that met the requirements under capability category 1 or 2 or 3?

MR. PHAN: In the PRA standard, ASME standard, there are many often requirements with only one description from all three capabilities: one, two, and three. For those supporting requirements, if the PRA met, normally the PRA analysts can say that they have the capability three.

MEMBER STETKAR: Okay.

MR. PHAN: That's why sometimes they say their PRA had the capability three because one, the definition for all three.

MEMBER STETKAR: Okay. Let me ask the

question from the negative perspective. If something was not met on the basis of technical merit, for example, the last bullet there, does that mean it does not meet technical capability category one or two or three?

MR. PHAN: For those with one definition and not met that definition particularly. For those with three capabilities, they have not met capability one.

MEMBER APOSTOLAKIS: They have a next slide that shows --

MEMBER STETKAR: Oh, do they?

MEMBER APOSTOLAKIS: The issue of capability, though, is important. What did you have in mind when you reviewed the PRA? Category one?

MR. PHAN: Yes, sir.

MEMBER APOSTOLAKIS: Okay.

MR. PHAN: Capability one.

MEMBER APOSTOLAKIS: They have category one.

MEMBER STETKAR: Okay. That -- I asked this yesterday.

MEMBER APOSTOLAKIS: Because if you look at the next slide, they explain this basis on

technical merit. It has nothing to do with the categories, limited information, incomplete model.

MEMBER STETKAR: But still if you have three possibility capability categories, you could make a judgment relative to --

MEMBER APOSTOLAKIS: Incomplete model --

MEMBER STETKAR: -- what an incomplete model is. Okay.

The question that I had is -- and I raised it yesterday -- the thing that troubled me is I understand what you're telling us here is that in the SER if I can find the right quote here, in the SER, there is a statement in writing that said you reviewed FSAR tier 2 table 19.1-1 -- and I'll skip all of the titles -- and finds the applicant properly characterized its findings relative to the capability categories addressed in the ASME PRA standard and reasonably described in the quality state of the U.S. EPR design-specific PRA.

That table gives one the impression that with a very small number of exceptions, this PRA meets either capability category 2 or capability category 3. The statement in the SER seems to fully support that. And, yet, I hear you saying that you

really just thought about does this PRA meet capability category 1?

So I'm a little bit disturbed that the SER seems to be endorsing the claim that with the exception of a few let's say site-specific or operational type omissions, like testing procedures and final design information on cable routing and that type of stuff, that otherwise this PRA is a rather very high standard compared to many, many PRAs that have been produced for even operating plants.

I am a bit concerned that the SER may be delivering a mixed message relative to the endorsement of that assessment in that table versus the level at which you really set your review goals.

I don't know if you want to make any comments about that. That is more of a statement, rather than a question.

MR. PHAN: That statement is misleading. The staff did not intend to say the EPR PRA at the capability three. The staff says so because for those SER one descriptions, if they met those, it can be at the capability three. So we will go back and withdraw that statement from --

MEMBER APOSTOLAKIS: I think that was not

the intent of the original ASME document because, of course, in category three, you have to have good event trees. But if you have good event trees, you cannot say on category three. Category three builds on one and two and does additional things: uncertainty analysis and so on.

MEMBER STETKAR: Plant-specific.

MEMBER APOSTOLAKIS: So if you say that event trees are good; therefore, it's category three, really is not appropriate. I think you agree that it is a misleading statement. So it's okay. Right? It will be corrected?

MR. PHAN: Yes, we will correct it.

MEMBER APOSTOLAKIS: Very good.

MEMBER STETKAR: Thanks.

MR. PHAN: Okay. So in RAI 54, question 19.01-14, the staff requested the applicant to provide the reason for 41 SRs being assigned as Not Met as Not Achievable.

And in their response, the applicant stated that the plant-specific data is not available; because the detail details information is not available; because the procedures, including operating and emergency procedures, are not

available; and walkdowns cannot confirm. So many 41 SRs are not met as not achievable.

Next slide, please. In their response to RAI 54, question 19.01-15, the applicant provided a basis for the 32 SRs as Not Met on Basis of Technical Merit. Out of those, 20 SRs are due to incomplete PRA documentation, 9 SRs are limited information, and 3 on the incomplete models.

The staff asked for the impact on the conclusions regarding the last three SRs regarding the models' incompletion. And the applicants analyzed those three and concludes that these SRs would have no impacts on the PRA resources.

MEMBER APOSTOLAKIS: Just a point of clarification. This NEI-based review was given to the AREVA people. Did they provide them as a result of this, the PRA documentation that was missing? So did you have the benefit of that or did you also look at the PRA where the documentation was incomplete?

MR. PHAN: The staff did not use the peer reviews for our conclusion regarding the PRA qualities.

MEMBER APOSTOLAKIS: I understand that. But when they say that there was incomplete

documentation, that was when the PRs reviewed the PRA.

MR. PHAN: Yes, sir.

MEMBER APOSTOLAKIS: When you reviewed the PRA, had that documentation been supplied?

MR. PHAN: No.

MEMBER APOSTOLAKIS: Dr. Dimitrijevic, have you supplied that? Is there a current version where the documentation is supplied?

MS. DIMITRIJEVIC: No. If the question is did we supply --

MEMBER APOSTOLAKIS: Are you going to?

MS. DIMITRIJEVIC: Yes.

MEMBER APOSTOLAKIS: Okay. That's good. Thank you.

CHAIR POWERS: You are so easily satisfied but a pussycat, too.

MEMBER APOSTOLAKIS: But coming back to this, I mean, the applicant went out of its way to do this extra thing, which I'm sure cost some money. How did that help you?

I mean, I understand that it provided an extra level of confidence, but did it make your effort easier or you would have done things anyway

and this just provided additional information? I mean, was this helpful?

MR. PHAN: The results from the peer review have only been used to provide the staff an adequate level of confidence in the EPR PRA model results and such.

MEMBER APOSTOLAKIS: But did it make your life easier?

MR. PHAN: Yes, in one way.

MEMBER APOSTOLAKIS: I'm sorry?

MR. PHAN: Yes, in one way.

MEMBER APOSTOLAKIS: Which is?

MR. PHAN: That is we were asking the applicant to give us specifics in those areas that the peer reviewers identified as not met and that staff compared those to those that the staff found from our peer reviews. If anything is missing, the staff creates RAIs and is asking the applicant for justifications.

MEMBER APOSTOLAKIS: I get now a little bit uneasy. Judging from what you said, the fact that this peer review existed created the additional headaches for the applicant. Is that true?

Are you discouraging future applicants

from doing the peer review and submitting the results to you? Theresa, explain to me why not.

MS. CLARK: In my opinion, which you'll hear more about later, I believe that, as Hanh said, it's more of a completeness issue in some areas that I reviewed. Maybe I looked at their results before I had gotten to reviewing a certain section.

And they may have raised a point that I didn't get to yet, but it was a very valid point. And so that went into our question process. It's not to say we wouldn't have caught those issues, but it's possible that it actually added efficiency in some areas.

MEMBER APOSTOLAKIS: At the risk of being declared again as an easy interviewer, I would say okay.

(Laughter.)

MEMBER APOSTOLAKIS: Well, the thing is this is a good thing they did in my view. So if somebody said, and we appreciated it and it was more efficient and all of that, if it was only a reason for you to create more RAIs, the next applicant might not actually go through this, right? Okay.

MR. PHAN: The interim staff guidance 3

states that PRA maintenance should commence at the time of application for both D.C. and COL applications. This means that the PRA should be updated to reflect plant modifications if there are changes to the design.

MEMBER STETKAR: Hanh?

MR. PHAN: Yes, sir?

MEMBER STETKAR: Let me stop you there before you get to the second one.

MR. PHAN: Yes.

MEMBER STETKAR: In the SER, you quote that statement quite frequently in terms of justification for the findings from your review. For example, if you find a situation where there is a completeness issue or some numerical effect where the applicant has responded to an RAI and it made the conclusion that, indeed, enhanced modeling, whatever you want to call it, the issue would, yes, indeed, result in a small increase, the conclusions that I read in the SER generally track the line that says, well, this is a small change. It certainly does not affect the conclusions regarding satisfaction of the safety goals. Therefore, it's not a big deal in some sense. And then this paragraph is quoted that says,

well, you know, there's a requirement for PRA maintenance.

I think, in fairness to COL applicants, the concept of PRA maintenance in my mind is a bit different than fixing up the PRA to add things and correct mistakes that have been identified during the review.

Typically if I think of a COL applicant picking up a PRA that has been reviewed and maintaining it, yes, indeed, they're responsible for adding new things that are unique to their site. They're responsible for keeping it as a, quote-unquote, living PRA. They need to add plant-specific data. They need to account for their own maintenance procedures.

When I think of that in terms of maintenance and going forward with the PRA, I don't generally think of fixing up identified errors or deficiencies.

So as I read through the SER, I was a little bit disturbed by the use of this PRA maintenance requirement through the COL phase and on out into the operating phase as a justification that it's okay to have deficiencies or omissions at the

DCD space.

I don't necessarily argue with your conclusions that the deficiencies or omissions are not important. I just think it's important to telegraph to the COL applicant that the amount of effort that may be required there is not just maintenance of an existing accepted PRA. It may be corrections of several items that have been raised during this phase of the review.

And I'm not sure that that message came across very strongly --

MR. PHAN: Yes.

MEMBER STETKAR: -- or whether you actually wanted to telegraph that message.

MR. PHAN: Yes. You want to say something?

MS. CLARK: This is Theresa Clark. I'll do my introduction on the very next slide.

There are actually two issues here. And I want to make sure that we don't get them confused. One issue is the ones you point out where maybe there is something missing in the design certification PRA but they have evaluated and said X percent change. And there are several of those.

Another issue is where they have made potentially maybe operational assumptions that the COL applicant may change in the future. And so I will talk about it in more detail later, but we have had them document those. If the COL applicant or holder chooses to change those, the PRA maintenance program will capture those. So let's set those aside.

MEMBER STETKAR: Yes, and I fully agree with that. I'm glad you clarified that.

MS. CLARK: In the first set of things, which is the little changes or potentially larger changes -- I wrote this question, but I was hoping to make Hanh talk about it.

Basically we read the question 329 sort of to capture these and see where the applicant's approach is. And since this is an open item, we're not really ready to talk about the resolution.

MEMBER STETKAR: Okay.

MS. CLARK: But the thrust of that question was to say basically what you asked, where what happens when you add all of these things up? You know, as individuals, you know, five percent here, one percent here, we can understand that as

individuals, they might be acceptable. But we don't understand the integrated effect until we see a PRA update.

And so what is the applicant's process for determining whether they need to do that sort of PRA update? And so that is essentially what the open item is.

MEMBER STETKAR: Oh, okay. Ah. Thank you. That helps. I didn't quite get that when I read that.

MS. CLARK: Right.

MEMBER STETKAR: So that helps an awful lot.

MS. CLARK: If I may, there's a couple --

MEMBER STETKAR: If that is the intent of that --

MS. CLARK: Absolutely. If I --

MEMBER STETKAR: -- that helps.

MS. CLARK: If I may read a couple of sentences from that question? I brought his because my brain isn't big enough. It says, the staff expects that the PRA be maintained during the application process such that it remains design-specific, et cetera. This process ensures

that the integrated effects of individual changes are reviewed by the staff and that the FSAR reflects both qualitative and quantitative insights related to the design. Please describe the method for tracking items for which PRA updates are needed. And please discuss the next routine update of the PRA, when it is planned and when we can audit it, et cetera, et cetera, because that is where we --

MEMBER STETKAR: Still, I mean, if I listen to that, I could interpret that as tracking the effects of changes in the PRA to changes in the plant design. I mean, it's not very pointed to say please explain who and when the identified deficiencies -- where you have identified something and the applicant has acknowledged that, indeed, that is a deficiency, although it is a deficiency that doesn't make much difference in the numbers, it yet is a deficiency.

That is a little bit different than making sure that the PRA adequately keeps track of changes in the design as the design evolves. That is one part of keeping the PRA up to date.

MS. CLARK: You're correct.

MEMBER STETKAR: It is a question of

bringing -- the concern is that when fuel is loaded in a particular reactor, the PRA quality should be at a certain level and understanding what that level is and who has the responsibility at what point in time from today out until that fuel load for addressing some of the shortcomings that have been identified.

I don't want to emphasize -- I mean, shortcomings sounds really strong. It's not, but it's a cumulative effect. I always use that 20 5-percent deficiencies is a factor of 2.

Is a factor of two important in terms of meeting the safety goals? No. Is a factor of two important in identifying potential components that a licensee may put in their D-RAP or O-RAP program? I don't know. Probably not but not as confident there.

So it's a question of ensuring that those, the cumulative effects of all of those little things, in addition to any future changes in the design as it becomes more evolved, are actually captured in the PRA.

When you read the question, I still didn't have the sense of that who is going to fix up all of the little pieces.

MS. CLARK: I agree with you. We

mentioned design here because that was what was called out specifically in the ISG. And given that this is an open item, I really don't want to second-guess the --

MEMBER STETKAR: Yes. Okay. That's --

MS. CLARK: -- applicant when I approach this.

MEMBER STETKAR: As long as --

MS. CLARK: But it is clearly an issue.

MEMBER STETKAR: From what you said, you know --

MS. CLARK: Integrated effects are important measures. I agree.

MEMBER STETKAR: Yes. Okay. Okay. Thanks.

MR. PHAN: So Theresa has covered the second bullet on this slide. So with that, I would stop here and would be happy to answer any additional questions on the PRA quality.

If not, then I would like to turn over to Ms. Theresa Clark. She is going to talk about the internal events PRA.

MS. CLARK: Okay. Good morning. Now I will give my official introduction, which you also

heard slightly in November, when we heard from chapter 10, but I would not expect you to remember that in detail.

MEMBER APOSTOLAKIS: Good.

MS. CLARK: Actually, you might have caught that on the first slide. I have since changed jobs, but this is a commitment from my old job. And I want to make sure that I give it the duty it deserves.

My name is Theresa Clark. Right now I am a technical assistant in the Division of Safety Systems and Risk Assessment, which is the same division that these folks are in, but I have actually worked on this design certification PRA review from the start, actually from before it was submitted.

I worked at the NRC for about six years. And most of that was in PRA, although I did a few rotations in different areas. And previously to that, I earned degrees in materials engineering, which we flagged the last time I was here, Bachelor's and Master's from the University of Maryland.

So what I am going to talk with you about -- no comments this time. What I am going to talk with you about this morning are --

MEMBER APOSTOLAKIS: We are on the record. Did you take any PRA classes from Professor Mosleh?

MS. CLARK: I did not.

MEMBER APOSTOLAKIS: You did not?

MS. CLARK: I started PRA once I came to the --

MEMBER STETKAR: That is not necessarily a bad thing.

(Laughter.)

MEMBER STETKAR: And that's on the record.

MS. CLARK: We were in the same building, though.

MEMBER APOSTOLAKIS: Oh. By osmosis, then.

MS. CLARK: So I am responsible for two topics in the U.S. EPR PRA review. One is level 1 internal events at power, and the other is level 1 internal events for shutdown, which we'll talk about later this morning.

As Hanh mentioned, before we go into the actual details, I am going to give you a little bit of discussion about the review approach so that we

have a common understanding of how we looked at the PRA. And after that, I'll move on to the technical topics.

Obviously I reviewed dozens of individual topics during this review, but I am only bringing to you the ones that I thought might be of the most interest to the Subcommittee. And through questions, of course, we could get to more.

Many other subjects, as you are aware, are documented both in RAIs and in the safety evaluation. And just in case you flipped through the slides and you were a little confused about the order, there is one topic related to level 1 that Ed Fuller reviewed. And so, for ease of switching people around, he is going to do that during his level 2 part. That relates to success criteria in the level 1 model.

Next slide, please. So, as I said, before I outline the technical topics and interests, I want to describe their review approach so that you can understand the depth and breadth of the review that we performed.

As I just mentioned, I have been involved with the U.S. EPR review since the pre-application

stage. We actually held an audit in October 2007, pre-submittal, which really had a quality assurance focus, but we were able to go and review the FSAR before it was submitted and really start understanding, formulating questions, even before it came in the door.

That really helped us out because after the documents were docketed in early 2008, we began our review in earnest. And, as Hanh mentioned, one of those steps was to develop these risk insights that we shared with other branches. And this encouraged early discussion with other technical branches and allowed us to understand the design that's reflected in the PRA and also changes that might not yet be reflected.

For example, as we discussed in November, we were involved in discussions about emergency feedwater for months because of that initial interaction that we had.

So I would say that my review progressed in three stages, which are outlined here. The first stage involved sort of obviously careful reading of the application, comparison to the acceptance criteria in the Standard Review Plan.

And, really, one of the things that I focused on at first was simply making sure that assumptions or techniques that were described were adequately justified where they were versus just making a statement about things.

We issued my first request for additional information, or RAI, just about a month after docketing. And that was 60 or so questions and 11 other RAIs -- and this covers both at power and shutdown just for my stuff -- followed throughout phases one and two, totaling nearly 200 questions. Like I said, this includes questions on shutdown risk. So this stage of the review had a broad focus.

The second stage of my review focused more on depth and detail. There are two real opportunities that allowed me to go do an in-depth review of this information, both audits and MDEP, the Multinational Design Evaluation Program. Both of these Hanh mentioned, but I just want to give you slightly more detail.

We were able to audit the AREVA PRA. And between April 2008 and March 2009, I spent about two weeks total of time looking at these detailed documents.

I reviewed portions of every supporting document that is related to the level 1 at power and shutdown PRA on topics such as data, sequence development, initiating events, and system notebooks.

And I also took vertical slices through the PRA in which I looked at the details of the most important at power and shutdown sequences from the event tree initiating event sequence portions through the system models and the human actions and down to the data development.

MEMBER STETKAR: Theresa, you obviously must have done that during the audits. Is that right?

MS. CLARK: Absolutely.

MEMBER STETKAR: Okay. So you did take those vertical slices?

MS. CLARK: Yes.

MEMBER STETKAR: At risk for lack of time here, do you have more information about what you did there to give us a feel for where you -- not excruciating detail, but, I mean, did you look at three or four different models or one model?

MS. CLARK: Yes. As I said, I looked, at least at a top level, at every document that they

had. And then I probably looked at -- I have my notes, but I don't want to go through them.

MEMBER STETKAR: Just a general feel for --

MS. CLARK: For example, loss of off-site power is very important. And so I can't remember how many sequences I looked at, but the top one or two sequences I looked at in detail going through the event tree.

They have sequence diagrams that were used to develop the event tree. They had success criteria that went into the top events in the event tree, the fault trees for the electrical systems all the way down to the data for circuit breakers and stuff.

MEMBER STETKAR: You actually went --

MS. CLARK: All the way down.

MEMBER STETKAR: Good. Good. Great.

MEMBER APOSTOLAKIS: That's good.

MEMBER STETKAR: That's excellent. Did you do that image in loss-of-off-site power? Did you drill down in any of the other models?

MS. CLARK: I believe I did, but I don't have my notes right here.

MEMBER STETKAR: Okay. Thanks. Good.

MS. CLARK: And throughout this process, I kept detailed review notes. I sort of kept a running computer list of every question that I had, not questions to the applicant but questions to myself. I mean, you know, I would paste in something from the FSAR so I could remember that I had actually resolved that for myself.

So that enabled me to keep my head together from the audit and make sure that important information that I sought during the audits, if it needed to be on the record, then I would ask a question to get that information. And later we'll talk a little bit about data.

Maintenance assumptions, for example, was one of the things where it was very clear from the detailed documentation what the applicant had done. So I was able to ask a question and sort of get that information into the record.

And then the second thing that I want to talk about, very briefly, is MDEP, which Hanh already mentioned. Each of the countries that is involved in MDEP is reviewing the EPR, although they're different in each country slightly. And they have the benefit

of seeing the PRA from these different countries.

So, for example, I asked multiple questions of AREVA based on points identified by IRSN, which is a French contingency reviewing the French PRA. And also we had a meeting last March with our international counterparts, where one of the major topics of the meeting was digital I&C and how that is modeled in the PRA. So we were able to understand what our international colleagues were bringing up as issues and make sure that we ask similar questions and share our insights there.

MEMBER APOSTOLAKIS: Is anybody modeling it?

MS. CLARK: Modeling digital I&C? Everyone is.

MEMBER APOSTOLAKIS: In the PRA?

MS. CLARK: Yes.

MEMBER APOSTOLAKIS: Geez. Except us? We don't seem to know how to do it.

MS. CLARK: I mean, it --

MEMBER APOSTOLAKIS: They do know how to do it?

MS. CLARK: We'll talk about it a little bit more.

MEMBER APOSTOLAKIS: Okay.

MS. CLARK: I think the models are quite similar across the countries. And we have similar issues as regulators with those models.

MEMBER APOSTOLAKIS: Wow.

MS. CLARK: And then the third stage of the review process, I focused on documentation and conclusions, obviously. And if you looked at the safety evaluation, I structured it around the regulations and the acceptance criteria that are in the SRP section to make it clear how I came to those conclusions, identified open items, et cetera.

I think a point that is very important to bring up is I mentioned how early we started sending out questions. We don't see very many open items for this chapter. And that's because we started sending questions early and we are able to have many rounds of follow-up. So a lot of things got resolved because on a particular issue, there might have been four or five questions on the same topic.

MEMBER STETKAR: Theresa, let me ask. One of the things that I struggled with as I was reading through the SER is that -- I mentioned it earlier -- there is a apparently a lot of meat in the

RAIs and the responses.

And our role is not to perform an independent detailed review of the PRA by any shape or form. However, it is to develop an independent sense of confidence in both the PRA, the technical quality of the PRA, and in a sense of confidence that the review has reached, your review has reached, appropriate conclusions.

It is honestly really difficult to reach that level of confidence simply by reading the SER because the SER simply refers to this, what must be a horrendous pile if you would ever print it out, of documents and discussions.

Do you have any suggestions about how we -- this meeting is not going to end, I think, our interactions on the PRA review. And I don't necessarily expect an answer back, but if there is anything that you can think of that would help us short of sitting down and reading that whole litany, which I am certainly not going to do, I think we would appreciate that. I am not. Taxpayers --

MS. CLARK: You said you didn't expect an answer back, but I'll take --

MEMBER STETKAR: No. It's kind of a

take-away. You brought up this long history of --

MS. CLARK: I do have two suggestions I can give you.

MEMBER STETKAR: That's good. And I think we would appreciate that because I think everybody in the room would appreciate something that adds efficiency and kind of enhances the quality of our function in this process.

MS. CLARK: Very quickly in the interest of time, I would like to make two points. One is that you're absolutely correct that this is a challenge.

We asked a lot of questions. We got a lot of information. And the staff's challenge was to understand how much of that we needed to talk about in our safety evaluation and how much of that we needed to ask the applicant to include in the FSAR for the record.

So we have had that approach throughout. You know, is this important enough to go in the FSAR? Is it important enough to go in the safety evaluation, which we don't want to be 1,000 pages long?

So we have gone through that screening

process. And we hope that we have provided the most important information in our safety evaluation.

The second point, just on the techie side, I save all the RAI responses in one folder. And you can word-search. So that's how I operate. And that is what I am doing right here. So we can work on that later.

MEMBER APOSTOLAKIS: Maybe we can get that.

MR. FULLER: Hi. This is Ed Fuller. I have a third suggestion for you, which is one that I prepared you for in my presentation later.

I realized very early on during the audit process that it a tremendous amount of meat that in order to properly digest would have to be extracted from the applicant in a way that would go on the docket.

So I prepared a number of RAI questions designed to get in response essentially an entire, for example, document report or calculation so that in the RAI response, me and my contractor team could get as detailed a review as possible.

And when I make my presentation later, I actually will give you a little road map on some but

not all of that.

MEMBER STETKAR: I think that will help, but the thing that I struggled with is you mentioned -- I forgot the body count -- 300-plus questions --

MS. CLARK: Some of which are many pages.

MEMBER STETKAR: Yes. And some of those are many pages. And we heard earlier that a response to a single question under an RAI apparently includes a rather extensive explanation in comparison of, for example, fire frequencies -- that's one answer to apparently one question. Ed just mentioned apparently fairly detailed supporting analyses that are documented through these things.

I think I made the point. In terms of time, it's a little difficult for -- you know, we can't ask for all 300-plus RAIs because it's physically not possible probably to read all of that material in a year. On the other hand, it's also difficult for us to say, well, please give us the RAIs and questions that you think are most important because that in a bit compromises our independence function.

Take it away. If you have any recommendations of sort of how we can quickly get at

that underlying discussion and documentation, it would really help.

MS. MROWCA: John, this is Lynn Mrowca. We have one more thing to say. And I think Theresa made this point of trying to define what in the response needs to go into the DCD.

I think we're very sensitive to the concept of finality once the design gets certified and what goes into that FSAR. And so we are really trying to make sure that all of that stuff goes into the FSAR and that this SE just supplements.

For instance, we wouldn't assume that they would put clarifying information in there. It helps us, but it doesn't have to go in there. But being sensitive to what happens after the design is certified with finality is very important.

And the second point is, as Theresa said, all of these RAIs and responses are publicly available. So if there was one in particular, one issue you wanted to go into, we would be happy to help you find the RAI or a few RAIs that respond to that.

MEMBER STETKAR: I recognize that. It's just a question of how far -- sometimes you don't

know what to ask for until you ask for several things and find out that the trail leads you astray. That's enough. We'll get back --

MS. MROWCA: We'll help you with the top.

MEMBER STETKAR: -- on something of --

MS. CLARK: Next slide, please. So the first topic that I want to discuss is the documentation of insights and assumptions. One of the acceptance criteria that is in the SRP is that the staff should confirm that the applicant -- that the assumptions made in the PRA will remain valid in the as-to-be-built, as-to-be-operated plant and such that they can be addressed by the COL application.

And the SRP also mentions in several places that the description of the PRA has to include risk insights. And in the SRP, it says that these risk insights are supposed to be defined like they were defined in the AP600 DCD.

It's sort of confusing how they make that reference there. But in the AP600 DCD, the applicant identified a long list of risk insights with dispositions to where you could find more information in ITAAC, COL items, and other parts of the DCD.

And that gave the staff confidence that

these insights would remain valid because they were documented elsewhere.

MEMBER APOSTOLAKIS: I keep hearing about the insights. It's a word I don't particularly like. Can you give me an example?

MS. CLARK: You'll see that very soon. May I wait a moment?

MEMBER APOSTOLAKIS: I can't wait.

MS. CLARK: Bated breath. So on this topic, you'll see that the applicant had similar challenges with this. And that is where I am going.

One of my first questions to the applicant related to just this point because they came in originally with a table, which is table 19.1-102, that included a bunch of insights and assumptions. And it did not include these dispositions to other parts of the FSAR where you could find more information.

And so I originally asked them for those dispositions. They made some changes. They could have been linked to better parts of the FSAR. And they did that later. And, as a result, because the applicant was struggling with the definition of insight and its conflation with assumptions, they

actually split it into three different tables.

There are three different tables that I want to highlight briefly. And I'll show a little screen shot in a second. Table 19.1-102 they have redefined. And it relates now to the reduction of risk in the U.S. EPR design. And it lists design features, such as redundant trains of safety systems, physical separation, RCP seal improvements that contribute most of the low risk that is achieved for the U.S. EPR design. And these features are also described elsewhere in the FSAR.

Because these features are critical to achieving the low risk that is stated, each table entry includes references to tier one, tier two, COL information items, where those features are described in more detail, which gives us assurance that the as-built plant will continue to have these features that contribute to low risk.

Table 19.1-108 lists insights about the design that were developed through the PRA process and, for example, the importance of ac power, which is sort of obvious for this active plant, level control during mid-LOOP and a bunch of others. You'll see an example in a second.

And, again, each of these insights is linked to an FSAR section or COL information. And it gives more detail. And this table is good because it provides a reference to EPR designers to make sure that they continue to consider these insights as they further develop the design. And it's useful to use because this is the type of information that we shared with other branches.

In contrast, the third table, which is table 19.1-109 lists important modeling assumptions. In response to one of our questions, the applicant reviewed over 1,200 of their assumptions, and they grouped them. And they created a list that's primarily of things that need to be -- and I mentioned this earlier -- need to be reviewed for applicability in the future. We might have made an operational assumption, but the plants can be operated in a certain way.

And they have created a COL item where later the COL will go back and check these assumptions and make sure that they remain valid for the as-built, as-operated plant.

The COL holders will do this. And it's actually been documented as a license condition in

the applications that we have received that refer to the U.S. EPR. I don't want to get any more into COL detail, though.

MEMBER STETKAR: Theresa, on those modeling assumptions -- and I have to admit I didn't read the whole table, but occasionally in the SER, there are items that you identified during your review. And the resolution of those items was that they were added to that list of assumptions.

The one that I highlighted was that the PRA doesn't evaluate instrument miscalibration. I mean, it's just not evaluated. And that apparently was listed as an assumption in the PRA.

When you say that the COL applicant has to verify that that assumption remains valid, I'm a little confused. You know, not modeling instrument calibration, does that mean that they're going to have perfect calibration or the people are perfect or that it remains okay to not model that or it's really not an assumption? It's something that's not in the model, --

MS. CLARK: Right.

MEMBER STETKAR: -- as opposed to an assumption that, well, we assumed that the equipment

would be out of service for one week based on generic data? And that is something that you have to go back and verify when you get a little bit more information.

MS. CLARK: I think you're right that there may be two sort of things going on in that --

MEMBER STETKAR: But those types of things are included in that 109 table, aren't they?

MS. CLARK: Yes. I believe you're correct. There are two processes really going on here, though. You need to keep in mind, as we mentioned before, that the PRA is going to be updated. And, as the regulation states, before fuel load, they need to update the PRA considering all of the standards that we have endorsed effective the year before that.

So something that is an omission -- and I confess that I am not as familiar on the calibration as related to the standard, but I am guessing that that is something that is going to be part of the standard and something that would be called out as they do that update because it's one of the areas where possibly they have identified they don't have procedures yet, so they can't do it yet.

So I think that the two processes, both having the assumptions that you checked, the real assumptions, and the PRA update before fuel load, they'll capture both of those types of issues.

MEMBER STETKAR: I'm hopeful that's true. I mean, I tend to think of this process. The parallel is during the design certification, certain assumptions are made. For example, seismic loading, an assumed seismic hazard, is set.

And the COL applicant must confirm that, indeed, that is bounding for their site. So that a lot of the confirmation of the assumptions is that any site-specific information is typically bounded conservatively by the assumptions that are made during the design certification process; whereas, in some cases here we're talking about things that are omissions, you know, sources of optimism, for example, that we're now asking the COL applicant to admit were optimistic and we need to enhance what we're doing to essentially quantify how much increase in risk there is. And that is a little bit different kind of requirement for the COL applicant.

MS. CLARK: You're right. I think we'll have to look at that more. And so I just want to say

we have these tables. Once the applicant provided them, obviously I reviewed them in detail to make sure they connected to the right other parts of the FSAR. And I asked for some follow-ups to make sure that inconsistencies were cleared up.

I just wanted to bring up this train of questioning and these tables because I think it's an area where the staff's review and the applicant's work in response added a lot of value to the FSAR because we're reviewing this PRA and this application at a stage where many operational things may not be known. And it's really critically important to document the plant they thought they were building the PRA for. So that they can look at that later and see if anything has changed.

And also because one of our acceptance criteria is to look at risk reduction compared to operating plants, the tabulation of these design features that reduce risk is very important. And, as I mentioned before, it is very helpful to share these with other branches.

I am going to flip really quickly through the next few slides just so you can see what these tables look like. This slide is the old AP1000

insights, which we referred to. It has insights and dispositions.

Moving on, this is table 19.1-102, which includes the physiatrist that reduce risk as well as the disposition. In many cases, these refer to ITAAC that will verify that these things actually exist in the as-built plant.

Next slide. 19.1-108 is the insights. Again, they have references.

Next slide. 19.1-109 is the list of assumptions. And, again, this links to a COL item that is used as a license condition for COL applicants.

Next slide, please.

MEMBER APOSTOLAKIS: Wait a minute. Wait a minute. Did you give me an insight?

(Laughter.)

MEMBER APOSTOLAKIS: I'm looking for an insight.

MS. CLARK: Yes. One of the insights --

MEMBER APOSTOLAKIS: Let's go back to wherever --

MS. CLARK: I don't even know if I gave you a good one on this slide. I just wanted to show

you what the table --

MEMBER APOSTOLAKIS: That's good. Here it says insight.

MS. CLARK: Yes.

MEMBER APOSTOLAKIS: Oh. Next one. Next slide.

MS. CLARK: I don't know if these are my favorite ones.

MEMBER STETKAR: Those are good.

MEMBER APOSTOLAKIS: Pick one of those and explain what we mean by --

MS. CLARK: Okay. Small LOCAs, for example.

MEMBER APOSTOLAKIS: Small LOCA. Okay.

MS. CLARK: A lot of LOCAs aren't as -- this is really on another slide, but I'll shortchange myself here. A lot of LOCAs aren't as important for the U.S. EPR because we've got four trains of safety systems. And there's a lot of mitigating systems.

But small LOCAs are still important because this plant has medium head safety injection. They need to depressurize to use that. And that's something that is modeled as potentially able to fail.

So small LOCAs still show up, even though big LOCAs are less important for this plant.

MEMBER APOSTOLAKIS: This is, in large part, due to the four-train redundancy. That is good. The contribution for small LOCAs is, however, still important on a relative basis because of the potential for common cause failures of the systems needed to prevent --

MS. CLARK: That's sort of different than what I said, but it's still true. Some of these for a seasoned PRA person are not Earth-shattering. Ac power is important, yes.

MEMBER STETKAR: But I think this is --

MEMBER APOSTOLAKIS: So what? I don't understand what --

MS. CLARK: For people who aren't us, like when we discuss these with other branches, these are less obvious. And that's what we find it useful for.

MEMBER STETKAR: The fact that small LOCAs show up where they do on this particular design might be surprising to others who are not as familiar with the design and the PRA, I mean, that it's not obvious, for example, why small LOCAs might be

important on this plant in a relative sense and less important on one of the other new plants because of slight, subtle, what might be conceived as subtle, differences in the design.

MEMBER SHACK: If you look at 3 in that table, potential cross-train impact, loss of HVAC, I think --

MS. CLARK: That's --

MEMBER STETKAR: That's a moot one. That's one I'd have to use --

MEMBER SHACK: We keep hearing about the four divisions and all the --

MS. CLARK: Like three slides.

MEMBER SHACK: And here we come up with this one, which is --

MEMBER APOSTOLAKIS: Which one is that?

MEMBER STETKAR: She'll get to it. She'll get to it.

MEMBER SHACK: It's just the two she happens to have up there are kind of --

MEMBER STETKAR: But even the small LOCA is a bit surprising for some other plants.

MS. CLARK: It's just the first stage of the table. So there's more. Okay. If we could go

to slide 22, I would have talked about this first, but I'm going to refer to the insight. So you might not have understood what the insights tables were. So I'll talk about it in a second.

As I mentioned before, one of the acceptance criteria in the SRP is that the design represents a reduction in risk compared to operating plants. And we're supposed to broadly compare those and see whether we can come to that conclusion.

The details are obviously in the safety evaluation, but I want to go over a couple of highlights here. It says at the bottom this comes from two major sections of the FSAR. There's 19.1.3, which is really these operational features that contribute to lower risk, and the table that I just mentioned before.

On a qualitative basis, the internal events risk is reduced in four major areas. And I really just want to go over these very briefly. The first is station blackout. Obviously that is an important contributor to risk in certain current plant PRAs, sometimes more than 70 percent of total CDF.

For the U.S. EPR, there are several

features that reduce station blackout risk. And I don't want to go into the system parts of it, but, for example, normal power comes from the switchyard. So there's no need for a fast transfer after a turbine trip. And there are multiple emergency diesel generators as well as station blackout diesel generators that are there.

The second is response to loss-of-coolant accidents. I believe we saw on the slide yesterday the in-containment refueling water storage tank, IRWST, and how that avoids the need for the operators to switch over to recirculation during a LOCA.

Also, there is the ability to automatically depressurize the reactor coolant system such that you can use the medium-head safety injection system. That's automatic. That's good. But, as I mentioned before, because of that need, small LOCAs are still important.

The third topic is loss of heat removal, which in the U.S. EPR design is a fairly small contributor because of several improvements to enhanced for secondary heat removal and feed-and-bleed cooling.

For secondary heat removal, as you know,

there are four trains of emergency feedwater. There is also a start-up and shutdown feedwater pump that provides an additional source of feedwater.

And for feed and bleed, there are multiple paths through which the operators can bleed the reactor. They can use essentially the PORVs, the pressurizer safety relief valves. They can also use the severe accident depressurization valves, which I'm sure you'll hear about in the severe accident part.

Finally, there are improvements related to tube ruptures. The LOCA things help you there as well. But also the medium head safety injection system is designed with the shutoff head that's less than the main steam safety valve setpoint. So that reduces some of your pathway through the steam generators and possibly outside.

And there is automatic isolation of the steam generator when a tube ruptures detected. So that, again, takes the operator out of the equation for some scenarios that are used in current plants.

These are just a few of the design features. There's --

CHAIR POWERS: If I look at those, --

MS. CLARK: Yes.

CHAIR POWERS: -- every one of them really addresses the frequency of core damage, the likelihood that an initiator will lead to core damage. Did you identify any capabilities in the plant to reduce risk by its impact on radionuclide release or its behavior?

MS. CLARK: I would love to defer that question to when we talk about level 2 because I am by no means a person who knows about that kind of thing.

CHAIR POWERS: Well, I mean, it seems like this is -- you're speaking of reduction of risk.

MS. CLARK: For the level 1 PRA.

CHAIR POWERS: And you only addressed the issues of core damage.

MS. CLARK: I agree with you.

CHAIR POWERS: But I have to wait anyway.

MS. CLARK: Please. You would not like my answers.

MEMBER STETKAR: I would offer the tube rupture stuff helps both.

CHAIR POWERS: Damaged fuel.

MS. CLARK: There are very many features

that I think you will be interested in that I am not an expert to talk about.

CHAIR POWERS: I am real interested --

MS. CLARK: Okay.

CHAIR POWERS: -- in one that is not there.

MS. CLARK: Slide 23, please.

MR. FULLER: Excuse me. I would rather wait, but let me whet your appetite just a little bit.

(Laughter.)

MR. FULLER: You would have found with the induced tube rupture issue, not the initiating event tube rupture. Features like the depressurization system, the manually actuated depressurization system, would essentially make that issue much less likely from a PRA standpoint and from a severe accident, containment-challenged standpoint reduces the likelihood of the direct containment heating event. And there are others, too, but that is probably the most important one.

MS. CLARK: Okay. Next I want to talk about my evaluation of a topic that I know is of interest to you, which is digital I&C. Some of it

may not be complete, obviously, because all of the open items for the level 1 PRA are on this subject. And the I&C staff is still reviewing the design. So it's possible there would be design changes that would result in PRA changes.

It was the subject of multiple questions and also, as I said, part of the MDEP meeting. The I&C model is an extremely detailed model that includes multiple failure modes for the protection system, rather than just a black box. In certain areas, there are undeveloped events for other I&C systems.

I want to highlight three major areas briefly. One is software reliability. Two is interactions among systems. And three is the data that was used.

The PRA includes two separate software failures. We heard that yesterday. And when I did my review, I was using an interim staff guidance on digital I&C for PRA. And that suggested some sensitivity studies, which obviously do not tell the whole picture.

But the applicant in response to one of my questions performed some of the sensitivity

studies that were suggested in the PRA. They spoke about that yesterday. These reliability values are important. That's essentially what the studies tell you. And it's not a big surprise.

There's a follow-on question to have them --

MEMBER APOSTOLAKIS: Let me understand that. There is some number for the reliability of the software. And then you change it up and down to see what happens?

MS. CLARK: And I understand that that is not necessarily giving you the whole picture. Yes. In one of the RAIs, one of the very early questions, they changed it by not a whole lot, a couple of orders of magnitude.

In a follow-on question, we asked for more information: one, to change it a lot more and see what the effect was.

MEMBER APOSTOLAKIS: As a side remark, I mean, there is an ACRS letter where we explicitly say one should not do that.

CHAIR POWERS: It didn't do any good, George.

MEMBER APOSTOLAKIS: It didn't do any

good.

MS. CLARK: On the other side, sensitivity studies obviously don't give you the whole picture. And I wanted to understand their reasoning for selecting the values. And that's another issue that became an open item. More details on how the --

MEMBER APOSTOLAKIS: I think the issue here with software is really the failure modes that may be unexpected when something happens. So was there any effort to actually see what kind of failure modes one might have if certain things failed or if the specifications were not right?

I mean, again, I realize this is going well beyond the state, the current state, of the art. But this is really where the action is. I mean, to say there is a probability of failure of the software as a package and then to start playing games with it, I don't know what kind of insight that gives anywhere.

MS. CLARK: That is exactly why we asked the additional question that became an open item, such as asking for how we got those.

MEMBER APOSTOLAKIS: You said earlier

that the international partners do something about it. Is that the level of analysis they do as well? Okay.

So I correct my earlier statement that we are the only ones who don't know how to do it. Nobody knows how to do it. And this issue is really hot.

Okay. I think I stunned you, but this is the way it is. I mean, we don't know how to do it.

MEMBER STETKAR: I think we know more how to do it. It's just that nobody wants to take the effort to try to understand that.

MEMBER APOSTOLAKIS: It is a research question in my mind. I mean, somebody has to spend some serious time thinking about it and trying to develop the potential failure modes and then start thinking about perhaps probabilities.

But because the issue is one of essentially design errors in its many manifestations, I think it's going to be a major challenge. So it's a bit unfair. It's a lot unfair to actually ask a particular PRA to do this, but this is a research area.

My concern about the sensitivity studies

-- and that's why the letter was very explicit about it -- I believe it was AP1000 that started this business -- is that people after using it two, three times doing sensitivity studies may feel that, okay, this is the way to do it. And nobody takes action to actually do something more serious. That is the concern.

So I don't think sensitivity studies mean anything here.

CHAIR POWERS: George, the issue we confront it seems to me is not satisfactorily resolved by simply saying that no one knows how to do it.

If there is an issue of whether we are providing adequate protection to the public health and safety or not, then I don't care whether they don't know how to do it or not. They do it.

MEMBER APOSTOLAKIS: The reason why I am saying nobody knows how to do it is because I want to make it clear that it's not something that people know how to do and this particular group didn't do it. It goes well beyond the state of the art.

Now, from the point of view of adequate protection, you can resolve the good old

defense-in-depth, diversity, and all of that and handle it that way and convince yourself that there is reasonable assurance, the traditional way of handling things.

But to actually talk about software reliability, I believe nobody knows how to do it. But that's not the end result of the adequate protection issue. You can still have assurance by doing other things.

So, from that point of view, I fully agree with you. I mean, it's not to prove something that is --

CHAIR POWERS: We could put an analog backup.

MEMBER APOSTOLAKIS: We can do that, for example. And everybody will be thrilled.

(Laughter.)

CHAIR POWERS: Half the room will be thrilled.

MS. CLARK: I am sure you will hear much more from chapter 7 about that.

The second major subtopic is potential interactions between I&C systems. As I mentioned before, the protection system is modeled in great

detail, but there are other systems that aren't.

So one of the open items is to explore whether there is any potential -- what do I want to say? -- dependencies between the protection system and these others.

MEMBER STETKAR: Theresa, George asked about insights earlier. I was trying to avoid questions about digital I&C because we could spend days talking about that, but you mentioned that they developed a very complex, detailed model, this software common cause failure notwithstanding.

Did the complexity and detail in that model identify any, let me say, surprises? In other words, to develop all of that detail justified by identifying any particular weaknesses in the software architecture, you're going to eventually get to an example that is really neat about this ventilation stuff that's a very, very subtle set of dependencies that is only revealed when you do a fairly detailed systematic evaluation.

What I'm curious about is did the complexity and level of detail in those digital I&C models result in any if you want to call them insights or discoveries about the design or the

architecture of those systems?

MS. CLARK: It didn't during my review, but that might be a great question to pose to the applicant.

MEMBER STETKAR: I'll ask if there's a short answer.

MEMBER APOSTOLAKIS: Everyone is looking at you.

MS. SLOAN: Let me rephrase and make sure we understand the question. I think --

MEMBER STETKAR: Let me just kind of cut quickly. Thirty years ago, people were convinced that they needed to develop models for reactor protection systems down to really contacts and open circuits in resistors. And that is the only way that we could understand how a reactor protection system, analog reactor protection system, could ever operate.

After spending an awful lot of time and money doing that level of detail, we found that we didn't learn anything from it except that it took a lot of work to do all of that level of detail that we didn't learn anything from, that it was much more effective to look at some intermediate level and maybe focus on some of the things that George was

talking about in terms of failure modes, rather than does this resistor have a short circuit in it or is that capacitor open?

And that's sort of the crux of my answer, that having done a relatively complex analysis, did you discover anything from that analysis or is it just something that burns up time trying to solve cutsets?

MR. ENZINNA: All right. My name is Bob Enzinna from AREVA. I will introduce myself first. I was educated at RPI. I studied under Dr. Hockenbury and Dr. Max Yeater. I went to work at Babcock and Wilcox over 30 years ago. And I have been working in the Lynchburg location through all the evolutions of the company.

I have been in liability and risk assessment the whole time. During my career, I have analyzed, done reliability analysis on a lot of I&C systems, starting with the analogue, some of our earlier digital systems that we sold, and then most recently the protection system in EPR, as well as the protection system replacement that was recently approved for Oconee.

The last couple of years I have also been

very active at the industry level in the NEI/NRC technical working group on digital I&C and the Reliability Subgroup.

So I guess there are lots of questions swimming around here. I would like to address some comments you have made, George. I think there were two different things that you said. One is about, do we understand the failure modes?

And I would say that our designers who built the system do indeed understand the failure modes of the software and have gone to extensive lengths to reduce those failure modes.

The other part of the question is, do we know how to put a failure probability on that? And that is another story.

Earlier this year I participate in a workshop in Brookhaven. I was the industry representative. There were software reliability experts from around the world.

And they were posed a question that was asked by the ACRS, can software reliability be addressed in a PRA? Is there a philosophical basis for including software reliability in the PRA?

The consensus, unanimous consensus, was

yes. Software reliability is something you can treat probabilistically and you should in a PRA.

It was also obvious to me that as far as the methodology of how do you generate a number for that, there were as many different opinions as there were people in the room.

So that's the crux of the issue. We have been analyzing digital I&C systems for years. The vendors of these systems know how to generate reliability models for digital I&C hardware. So it really comes down to the question, how do you do the software?

And that's why it's my firm opinion that there will never be a precise way to generate a number for it. That's really not my primary concern. The primary job of us is to reduce the number, not necessarily know what it is.

So what we have done in this PRA is generate reliability values for the software that have a large element of subjectivity in them, engineering judgment. So that forces us to do sensitivity studies and treat that uncertainty like we would other uncertainties in a PRA.

So the question was, what did we learn

from that? Two things. One is I am convinced from my study of this system that the probability of a software failure is very small because of all the protections and fences that we built in the system from our studying of the failure modes. The other insight is the uncertainty is large.

So if you looked at our results, the Fussil-Vasili values for the software contribution are fairly small, but the RAW values are high.

So what we have learned from that is, well, we have committed in our design to a diverse actuation system. What that system does is it reduces the uncertainty. It won't necessarily reduce the core damage frequency or reduce the absolute value of a failure because I think that is very unlikely and the failure modes that are postulated are very hypothetical and remote, but it does reduce the uncertainty and the spreads that we're seeing in these sensitivities.

MEMBER APOSTOLAKIS: So essentially, then, you implemented the diversity, defense-in-depth measure to make sure that the thing would work. When all is said and done, that is really what you did by putting in a diverse system.

MR. ENZINNA: The diverse system is not included in the model that they have reviewed. We didn't include the diverse trips in our model, in our base model, because we hadn't identified all the functions yet at that point.

So the sensitivity studies that we submitted with these RAIs, large uncertainties, because the effects of those backup trips aren't in there. When we incorporate those backups in a future update, those uncertainties will come down.

MS. SLOAN: But we have implemented a diverse actuation system in the design. I think that was your question.

MEMBER APOSTOLAKIS: Yes.

MS. SLOAN: We have a diverse actuation system in the I&C design.

MEMBER APOSTOLAKIS: But it's not in the PRA that the staff is reviewing? The design is not the design they're reviewing?

MR. ENZINNA: We didn't credit the backup functions for diversity and defense-in-depth and various backups to the ESFAS trips in this model yet.

MEMBER APOSTOLAKIS: So it will be done later?

MR. ENZINNA: Done later, yes.

MEMBER STETKAR: Is that identified in the SER? I didn't --

MS. SLOAN: There is a backup trip model as a backup to reactor trip, but there's not backup engineered safeguard features actuations. I think it's in there, but it's certainly in the FSAR.

MEMBER STETKAR: I will try to keep this short. My original question was not really related to software failures. It was more related to -- your slide says there is a very complex model. And that implies a fairly complex hardware model, how the stuff is wired together.

And the question was, did you discover anything by developing that rather complex and detailed model of the hardware, the different modules and the digital I&C?

Software aside, did you find anything, you know, discover any of what we used to call pinch points that wouldn't have otherwise been obvious unless you had gone to that level of detail?

MR. ENZINNA: No, not personally because it's a fairly mature design. And the design we have is very similar to the design that was used in our

European plant. And so many of the insights that you have referred to have already been accounted for in the improved design that we have.

For example, it's a four-channel RPS. And it has functional diversity in it. So each of those four channels is guided into the two independent channels. So it's essentially an eight-channel system with an A/B diversity.

And that was a feature that was put in there as a result of reliability and risk studies, plus, of course, functional things that we've got features in there, trips in there that you won't see --

MEMBER STETKAR: So you are saying if you had done that level of analysis 10 to 15 years ago, you know, you might have learned more at that time and probably did?

MR. ENZINNA: Yes.

MEMBER STETKAR: Okay. Good. Thanks.

MS. CLARK: I think I'll move on because these are open items. And you'll definitely hear more about this later.

Next slide, please. We heard a little bit about this earlier. And I've actually discussed

this. It's been resolved to our satisfaction. It's in the safety evaluation. But it was the subject of so many questions as well as discussions at our MDEP meetings that I thought it would be useful to bring up here.

The topic here is the ventilation dependencies that are assumed in the system and that they strongly drive risk. It's both a design and a modeling issue.

Let me see. I'd like to flip to the next slide, and I'll come back to this. Essentially the component cooling water system at this plant has a dual common header design, where each header joins two of the four trains and those common headers cool other certain loads.

And two of those loads happen to be two of the safeguard building HVAC trains. There are two air-cooled chillers and two component cooling water-cooled chillers. And because of how the system is modeled as well as how it is designed as well as how it is modeled in the PRA, this has some implications.

Because the PRA assumes that component cooling water pump in train 1 is running -- this is a

little bit complicated -- it assumes that it's running. And it also assumes that the function that causes the switchover so if you lose pump 1, you switch to pump 2. So you keep the common header. It assumes that that switchover function is also in building 1. So flip to the next slide.

MEMBER APOSTOLAKIS: Probably a good assumption.

MS. CLARK: If you lose ventilation to building 1, the model assumes that you would lose that running pump and you would lose the switchover, which means you would lose the common header. And because that common header provides cooling to the chiller for HVAC in the other building, then over time you could lose HVAC in the other building in the electrical equipment and emergency feedwater that is supported by that HVAC.

Now, there are a lot of assumptions based into this, but it is interesting. And it might not have been obvious. The applicant identified this from the beginning. It's not like it was a magical catch that we made.

But because these two trains are linked together, it contributes about 40 percent of the

internal events risk. So I asked a lot of questions to understand it. And our European counterparts didn't see this in their models, but they wanted to know what it was. So that's why we asked a lot about it.

So there are two major assumptions driving it. Can you flip back two to the text? Thank you. There are two assumptions driving it. One is the running train, and one is the switchover.

It's driven by the assumptions that divisions 1 and 4 are initially running. If divisions 2 and 3 are initially running, then after that failed, even if the common header failed, it wouldn't matter because there are air-cooled chillers in the other divisions. So you would only lose one train.

And so we had the applicant look at this and say, you know, what would the effect be if 2 and 3 were running? Well, the effect is basically you remove this whole contribution, and CDF would go down about 40 percent.

But in their response, they gave, you know, realistically there is going to be pump rotation when you operate this plant. Certain pumps

are going to be running at certain times. They're not going to say always run two and three because that is the lowest risk.

And so they looked at some possible pump rotation strategies, and they said if they implemented those strategies, internal CDF might go down by about a fifth.

So we felt like we understood what was going on here. They took the more risky approach, you know, higher-risk approach when they modeled it. And so we kind of moved on from there.

The other major assumption is that the PRA assumes that the CCW switchover fails when you lose that ventilation to the building. So we asked for more information there. Had they considered any design changes that would remove the vulnerability of the switchover?

And basically they sort of went through the fact that certain design changes could introduce additional failure modes. And they said, you know, obviously there might be procedures later on to say if you lose ventilation, you should probably make sure that there is a running pump in a building with ventilation.

But this isn't a procedure that has been developed. They're not sure if the COL holders would go this way. So they didn't want to model an action that wasn't documented properly. So basically they took the more conservative approach there as well.

So what we wanted to do was make sure that we understood what was going on here and that the insights and the assumptions that were related were documented because, again, as you observed before, this isn't something that might be obvious, but it is something that is extremely interesting and that you can understand that this is driving a very large chunk of the internal events risk based on certain operational assumptions.

So if the plant were operated a different way, if there are procedures in place, the absolute value of the risk might be lower. And the importance of the equipment might also be lower.

MEMBER STETKAR: Just to interject, this is a wonderful example of the use and the power of performing risk assessment at the design phase.

Now, what has it told us? It has told us that, indeed, there have been some assumptions made. Those assumptions have been tested. They're

conservative. There might be operational decisions that could reduce to some extent this contributor to risk -- that is important information to the COL applicant, the eventual licensee; that's great -- and that we still at this design stage have assurance that we are well within the margins to the safety goals because everything that we understand about this somewhat surprising phenomenon, we have confidence that the risk is not much higher, if any higher, than what has been quantified in the PRA. And I think it's a wonderful example of the use of PRA in the design phase.

CHAIR POWERS: We have no idea where we stand relative to the safety goals. All we know is where we stand relative to the subsidiary goals.

MEMBER STETKAR: That's true. Okay. I stand corrected. 10-4 core damage frequency and 10-6 R2 release frequency.

MS. CLARK: Can we go forward three slides, please? So this is my last slide on the internal events PRA. Essentially, obviously, we can't come to a formal conclusion until the open items, which are all related to digital I&C, are resolved.

But the safety evaluation is organized by these acceptance criteria that Hanh talked about before. And except for those open items, we have come to a conclusion on many smaller points, all of the RAIs and that kind of thing. And we believe that there has been a robust analysis done here.

And so barring any further questions, which I would be very happy to answer, the next section is on external.

CHAIR POWERS: We will take a break for -- I sense some interest on the Committee in taking a break. There is usually a stronger laugh than that, but some of them are aging ungracefully, I guess. We'll take a break until 10 after. My intention is to go until noon and take a break for lunch at that point. We will recess --

MEMBER APOSTOLAKIS: Praise to the Chief.

CHAIR POWERS: -- until 10 after.

(Whereupon, the foregoing matter went off the record at 10:49 a.m. and went back on the record at 11:12 a.m.)

CHAIR POWERS: We are ready to come back into session. And we will continue with the staff's presentation.

5. U.S. EPR DC SER WITH OPEN ITEMS FOR CHAPTER 19, PRA AND SEVERE ACCIDENT EVALUATION

MR. PHAN: Yes. Good morning again. This is Hanh Phan. In the next group of presentations, the staff will cover the seismic PRA margins, the external flooding, the internal fires, and the external events.

So, with that, I would like to introduce Dr. Jim Xu. He is going to talk about the seismic evaluation.

MR. XU: Hi. Good morning. My name is Jim Xu. I'm a senior structural engineer from NRO Division of Engineering, Structural Engineering Branch.

I have been with the agency for three years and working primarily on the review of the design of containment in the category 1 structures for D.C. and COLAs. I also include the seismic margin analysis.

Prior to joining NRC, I worked at the Brookhaven National Lab for 20 years and worked mostly on the seismic issues for NRC and DOE. And apart from that, I was as a young engineer working at Twice (phonetic) Nuclear for a few years. I have a

Ph.D. in software engineering.

Having said that, I would like to highlight the elements that should be included in the PRA-based seismic margin analysis. And I'll go through the issues we have with AREVA's analysis.

There are basically three elements in the PRA-based seismic margin assessments. The word PRA-based implies we should use mainly elements that are employed in the seismic PRA analysis. And we try to complement that with margin assessments. And the first elements in the PRA-based seismic margin assessment is the development of the accident sequences, including all of the seismic initiating events. And that will be done based on ASME PRA standard in accordance with the capability of category 1 requirements.

The accident sequence analysis shall include initiating events from transients; COLAs, loss of coolant accidents, of all sizes; and loss of supporting systems due to seismic failures.

So from the seismic sequence analysis, we will establish SEL, which is a seismic equipment list. What would include all the structures, systems, and components identified on the accident

sequences.

That list will fit in the third bullet, which is to determine the capacity of the SSCs in terms of high confidence and the low probability of failure, HCLPF capacity.

And this would include two aspects. One is the SSC level, structures, systems, components, needed to perform fragility analysis, and the fragility analysis for SSCs that completed. Then we'll determine the sequence-level HCLPF. Okay?

And the lowest, the sequence-level HCLPF, will be the one that governs planned seismic margin HCLPF. And that's the high level of methodology for seismic margin assessments.

On the accident sequence analysis, AREVA has developed two types of initiating events. One is LOOP-induced transients. Okay? And the second is small-break LOCAs. Okay?

And that may not be adequate because, according to ASME PRA standard, we need to assess the seismic initiating events, including LOCA of all sizes. That's also size large LOCA events as well.

The challenge actually is the latter part in the fragility analysis because for fragility

analysis, one needs to establish the ground motion first as the input to the fragility analysis. And that goes to the next page. I have the next slide. That is the next slide. Okay.

Originally AREVA used NUREG/CR-0098 spectra as the input to fragility analysis. And we go back and forth with RAIs. And we just received the response from AREVA. And that response actually was received after the cutoff date for this SER. Therefore, it would not incorporate that there would be our staff assessment in the SER.

I would like to state that AREVA now has used the EPR CSDRS as the input to fragility analysis. And that is the one the staff would accept. Okay. In fact, we --

MEMBER SHACK: Are these the people that have like ten spectra?

MR. XU: That is another issue I want to get into, yes. The CSDRS established for AREVA for EPR, for U.S. EPR, is originally based on the Euro spectrum. Okay?

There were three sets of ground motion input that we're presenting: soft, medium and hard site characteristics. Okay.

During the last December 14 pulpit meeting with AREVA, AREVA informed the staff that AREVA would incorporate one additional U.S. hard rock site ground motion and associated characteristics into the CSDRS. Okay.

Now they will have four different response spectrums that they need to assess for the fragility analysis of the old SSCs on sequences. And that is a challenging job, and I haven't seen anybody done, you know, multiple done, one or two at the most. We need to do all four of them. Okay. So that is a challenging job, but that is what AREVA has committed to do.

We just received the response that the Committee is doing that and wait until AREVA completes the fragility analysis. And the staff will review to determine the adequacy of the analysis. That is the fragility.

I want to mention one more thing about fragility. Okay? For fragility analysis, there are two approaches or two types of components. One is fragility analysis by performing calculations. It's analysis. It's a log-normal distribution.

You determine the median and

uncertainties. Okay. And that is one type of analysis people usually do for buildings and mostly for buildings.

For components qualified by testing, it is a different issue. Okay. We recently, the staff, prepared ISG-20. It's available in the NRC website. And we also provided guidance on determination of the fragilities for equipment qualified by testing. Okay? That's how to use different sets of standards.

The second bullet, the fragility of the SSC did not account for the effect of nuclear island stability. And this has raised some concerns, not just for the PRA-based seismic margin assessments. This is also a major issue for chapter 3, 3.8, with the design of the containment.

And one reason why the nuclear island stability becomes an important issue here, as opposed to historically this issue will never raise to the prominence, this kind of prominence, because the existing power plant built in this country or maybe around the world, in the past, you know, most of them did not employ a nuclear island concept. They built a containment that stands alone on their own basemat. And they're not a very massive as these.

And also the ground motion level used in the design of site-specific reactors are not as large and broad as the standard designs.

In the standard design, you have a nuclear island basemat that is so massive and so large and also the design standard is much higher because this is a standard design, a generic design that covers so many different sites, and that is why the stability becomes a very important issue and it will still have many RAIs in 3.8 dealing with how do we get to attend the safety factor, sliding, especially the sliding of the nuclear island.

And that's why we raised this RAI question for the fragility because the fragility was never considered, nuclear island stability, from the existing operating vouchers. And that's the reason we ask the question.

The applicant responded that they will pass this issue to the COLA to address because that will be easier to address on a site-specific situation.

The last bullet on the COLA information item, there is some confusion among applicants regarding the scope and the responsibility of the

D.C. and the COLA, who is supposed to do which part. Okay? And I would like to clarify that as well.

The D.C. design is based on design-specific information. They don't have the benefit of site-specific or plant-specific information. Okay?

So they make a lot of assumptions in their PRA-based seismic margin assessments. Those assumptions will have to be confirmed about the COLA, the COL applicants when they have a site, that when they have a site, that they have site-specific characteristics available.

And they also have the site hazards available. And that's important. That's one of the reasons they need to perform PRA-based seismic margin assessments as against to PRA, seismic PRA, period. Okay.

The reason in D.C., they do margin, which is PRA, because they don't have the benefit of the HCLPF. So they couldn't do the size of the PRA. Otherwise they would do PRA.

So for COL applicants, they do not need to redo another site-specific seismic margin assessment. And this is one of the COL items AREVA

has listed. I think they need to correct that aspect. Okay.

The PRA-based seismic margin analysis will be performed only once in the D.C. space. Okay? That's a D.C. applicant responsibility, not the COL's.

The COL's responsibility is to -- because they have the site-specific information. Therefore, they need to update D.C. PRA-based seismic marginal assessment, update all the sequences and the fragilities to incorporate site-specific soil failures and to see if there are sequences that need to be revised to incorporate liquefactions and slope and stability issues that would be due to lower the capacity of the structural components.

So that will either lead to a modified existence sequence in D.C. space or you may have some addition sequences. And that's the COL's responsibility.

After we update, the COL will determine the, identify the, structures, systems, components that are affected by site-specific conditions. And the performance for GLP analysis based on the GMRS, instead of CSDR. GMRS is site-specific ground motion

response spectrum. And that's the update aspects.

The other aspects are with the D.C., we need to provide the instruction as after the COL application is approved and the plant has been built, the licensee needs to perform a walkdown to verify as-built and as-built configuration is consistent with what is committed in the D.C. and the COl applications. And there are also instructions that need to be provided in the D.C. application.

MEMBER STETKAR: Jim?

MR. XU: That's what I have.

MEMBER STETKAR: Just one question. I was looking through my notes, and I couldn't find it.

MR. XU: Yes.

MEMBER STETKAR: AREVA has a fully integrated level 1 and level 2 PRA. In other words, they have linked the level 1 PRA models with the level 2 --

MR. XU: Yes.

MEMBER STETKAR: -- PRA models. When they defined the sequences for the what we call the PRA-based sequences to determine the limiting fragility, the HCLPF values.

Do those sequences extend out through the

level 2 model?

MR. XU: No.

MEMBER STETKAR: Why?

MR. XU: To the Level 1.

MEMBER STETKAR: Why?

MR. XU: Well, level 2 is very difficult to be done for seismic events. Actually, even for operating plants, there are very limited level 2 seismic PRAs available.

MEMBER STETKAR: Wait a minute. That's because most operating plants have not performed a level 2 PRA. So they don't have those level 2 models. These folks have kind of the level 2 PRA. So they have the level 2 models. So I'm curious why the sequences don't extend out to include seismic fragilities of systems and components and structures that may be unique to the level 2 because that would give you additional insights for the seismic capability out through release categories, which I think is important.

MR. XU: Yes, I agree with you. Actually, we would like to see that.

MEMBER STETKAR: You didn't ask for that.

MR. XU: No. Well, you know, right now

we are trying to straighten out the process, the implementation aspects. We just got this response. And this will put AREVA on the right path before they even committed to do NUREG-0098. And that is completely out of whack.

MEMBER STETKAR: But still all of the questions are within the context of simply seismic margins to core damage, --

MR. XU: Yes.

MEMBER STETKAR: -- not seismic margins to releases.

MR. XU: That's exactly right because that sequence should be consistent with the seismic PRA. Okay? Whatever sequence of that seismic PRA normally would include it should include in the set PRA-based seismic margin assessment. And that's why even the current scope that AREVA has done has not adequately addressed all the initiating events.

So some more work needs to be done in the sequence. And maybe we need to address the issue you raised, to include the sequences to level 2.

MEMBER STETKAR: I don't know whether we'll change the conclusions at all, but that certainly --

MR. XU: Well, that will provide --

MEMBER STETKAR: You know, in the sense that we're trying to evaluate the risk of this plant relative to public, releases to the public, and we have a tool that within the limitations of a seismic margin analysis can at least give us some insights to that contribution to risk, it seems like we ought to use it.

MR. XU: Seismic risk is going to be among the highest risk.

MEMBER STETKAR: If a real seismic risk assessment is done, then I think yes.

MR. XU: Yes because the special internal events --

MEMBER STETKAR: But given the fact that we don't have a real seismic risk assessment, at least having confidence that a margins assessment gives us confidence out through the release categories --

MR. XU: Exactly.

MEMBER STETKAR: -- would provide some added confidence, at least at this stage of the design certification process.

MR. XU: We did include one staff

position, ISG-20, that if a COL applicant could not meet the 1.67, the magic margin, then they should perform -- because they have the seismic hazard information. Then they should come off the hazard was the hazard to produce --

MEMBER STETKAR: A mean estimate of the failure probabilities, yes.

MR. XU: That's right, yes. And you have listed for LRF, no one has done it, but --

MEMBER STETKAR: No.

MR. XU: -- they can do the LERF. That's what they could do, yes. For the fragility analysis, it is challenging because there are multiple --

MEMBER STETKAR: Because of the multiple? Yes, that's right.

MR. XU: Yes.

MR. FULLER: This is Ed Fuller. Seismic margins assessment is incompatible with a level 2 PRA. We fully expect the full level 2 seismic PRA to accompany the one that the COLA holder produces prior to fuel load.

And it is my expectation that when that is done, you will find that there will be a significant increase in both the CDF and the large

release frequency.

Back right around the turn of the century --

(Laughter.)

MR. FULLER: Back around the turn of the century, when I was in between my two EPRI tenures working for a consultant called Pole Star, we did steam generator tube integrity risk assessment for the Diablo Canyon plant. And in that, there was a seismic PRA that we utilized that PG&E had done.

The contributions to these accident scenarios, if you'll look at the release categories to find for the various kinds of initiating events; for example, station blackout or loss of off-site power or whatever, they were adding more than a factor of two to the CDF and LERF.

So, granted, that's Diablo Canyon, but my expectation is when people really do their seismic PRAs, you're going to see big jumps in these numbers relative to what we see in these design certifications.

MEMBER STETKAR: Yes. I think any of us who have kind of been around since before the turn of the century --

(Laughter.)

MEMBER STETKAR: -- or have done some of that stuff are pretty sensitive to that. My only point was that within the limitations of the seismic margin assessment that is being done as part of the PRA work to support the design certificate, there is, indeed, some extension that could be made out into the level 2 models to pick up not necessarily seismic-induced failures that you're talking about but things like have they evaluated containment isolation functions, which are strictly a level 2 but systems-related, systems hardware-related, type thing.

And have they judiciously selected all of the sequences, to include the SADVs and the SAHR, and that type of stuff, which would contribute also to level 2 and appear in some of the level 1 sequences? But containment isolation certainly doesn't in terms of systems analysis.

It seems like they could at least do that to give confidence that, at least at the design stage, there aren't any hidden vulnerabilities in some of the systems that they haven't looked at pending a full analysis that you're talking about.

MR. FULLER: Just remember all they're required to do for the design certification is a seismic margins analysis.

MR. XU: PRA-based.

MEMBER STETKAR: That's true, but you could still do a PRA-based seismic margin analysis that identifies your combinations of equipment failures out through to include what would normally contribute to plant damage states, let's call it, --

MR. FULLER: Sure.

MEMBER STETKAR: -- rather than just core damage.

CHAIR POWERS: So you are telling me that I am going to get to write a letter that says this plant poses no undue risk to the public health and safety as long as we don't have an earthquake?

(Laughter.)

MR. FULLER: Do I have to answer that question, Dana?

(Laughter.)

CHAIR POWERS: Well, you could at least say it's got to be a pretty big earthquake.

MR. XU: Any more questions?

(No response.)

MR. XU: Thank you.

MR. PHAN: Thank you, Jim.

The next topic is on the internal floodings and on the internal fires. Plus, I would like to talk about the approach that was performed to reduce the internal flooding and internal fires PRA.

For PRA, I examined the EPR plant layout to ensure that the PRA covers all potential risk-important areas.

Next I focused my review on the accident scenarios to ensure that the PRA includes all possible scenarios associated with the identified areas, including the spatial and direct impacts.

And, third, I looked carefully throughout the accident sequences to ensure that they are logically deriving the scenarios. I also reviewed the event trees, fault trees, and the data, including initiating at sites to each area; and, finally, the assumptions and the results.

This slide shows you the methodology that the applicant took to develop the internal flooding PRA. Because of the time constraints, I am not going to go over this slide.

For the first topic of interest regarding

internal flooding PRA, I would like to talk about the flooding sequence. The staff review found that the flooding source of the valves, pumps, tanks, and PORVs was not included in the analysis. Thus, in the RAI 4, question 19-50 and RAI 142, question 19-262, the staff requested for the justification.

The applicant chose topical report EPRI 102266 to correlate the initiating event frequency -- I mean, internal flooding frequencies.

In its response, the applicant performed a sensitivity using EPRI report 1013141, to include the passive components. The sensitivity study showed that using EPRI report 1013141 would result in the small decrease, just about one percent.

The staff also reviewed the response and the FSAR and found that human-induced flooding events were not included in the estimates.

In the applicant's response to RAI 120, question 19-228, the applicant's estimate calculated the human-induced flooding events frequencies as 4.4E-4 per year. Compared to the flooding frequency of 2E-2 per year provided in the EPR, the applicant concludes that the flooding frequency from human-induced events only contributes one percent.

Next slide, please.

MEMBER STETKAR: That is a little bit surprising given the operating history that a lot of the floods that we have seen, especially during shutdown, are human-induced floods.

It is also, I think, a little misleading to take three flooding events across the industry and divide by many thousands of industry-years and assign that frequency as evidence for the experience at individual plants.

What we found is that things like fires and flooding are very, very plant-specific. They depend on plant-specific arrangements and, to a large extent, how people do business, especially from these human-induced flooding events.

MR. PHAN: Yes.

MEMBER STETKAR: So the actual experience is one flooding event, let's say, at plant X in the number of years that that plant has operated, zero flooding events at plant Y in the number of years that that plant has operated, zero plant floods at plant Z. It is not three flooding events divided by the sum total number of operating years.

MR. PHAN: Yes.

MEMBER STETKAR: If you account for that plant-to-plant variability in the actual experience, you generally develop estimates of the flooding frequencies that a) are higher than the point estimate presented and b) have much larger uncertainties because you're not quite sure which member of the population your particular plant is in.

So I was curious whether you explored with the applicant their assertions regarding the small frequency of these human-induced floods and the basis for that assertion.

Again, I'm not insinuating that this is going to be a significant contributor, but because this is another area where the argument is, well, it's a small increase and it's small enough that we don't need to worry about it, the frequency could actually be substantially higher --

MR. PHAN: Yes.

MEMBER STETKAR: -- just simply using the evidence that they have.

MR. PHAN: Yes. First, this frequency does not include those that occurred during low-power at shutdown.

MEMBER STETKAR: I understand that.

MR. PHAN: Yes.

MEMBER STETKAR: This is simply three events --

MR. PHAN: Yes.

MEMBER STETKAR: -- during power operation.

MR. PHAN: Yes.

MEMBER STETKAR: But it's still three events that happened -- I don't know the events, and I don't know what plants that they happened, but it's three events that happened at three discrete plants.

MR. PHAN: Yes.

MEMBER STETKAR: And currently we don't have even 40 years of operating experience at any given plant, I don't believe. We might have 40 years at one or two.

MR. PHAN: Might I ask AREVA --

MEMBER STETKAR: We don't have hundreds of years at any plant.

CHAIR POWERS: Next year.

MEMBER STETKAR: Next year? Okay. Thirty-nine.

MR. PHAN: May I ask AREVA if you have any additional information regarding the estimate?

MR. CORDOLIANI: Hello. This is Vincent Cordoliani again. I think those are valid points, but what we have done in that RAI response was really -- well, first of all, when procedure and maintenance and the possible procedures are not really set in the phase, it's difficult to give a precise variation of the human-induced floods.

So our approach in that RAI was not necessarily to show that it was good to always neglect them but just show that by this estimation, once we have them in all detail, once we have the EPR PRA done for the fuel load, the impact of adding those events would be small. That's what the thought was.

So, I mean, as you said, the frequency reduced was phased on those events mentioned, those three.

MEMBER STETKAR: Well, my point is it's based on COL data in the denominator, rather than -- you know, if, for example, I had one flooding event in 20 years. Let's just take a simple example that I have 100 sites. One site has had one flooding event in 20 years.

There's in some sense a one percent

probability that the flooding frequency is one event in 20 years, which is .05, not 10-5 or something like that.

And when you account for that uncertainty looking at the actual variability in the plant population, you might have a three percent probability that the flooding frequency is something on the order of .05, maybe a little bit lower and a 97 percent probability that it is much less than that, but that depends on whatever generic distribution you're using.

It's a much different assessment than just saying three events divided by many, many, many years.

MR. CORDOLIANI: All right. Again, without further years and without having a better idea on what type of risk scheme maintenance may or may not occur, using that type of COL-generated data was the best we could do to answer this.

MEMBER STETKAR: It's not the best you could do to answer that question. You could have done something different that would have also addressed the question without that plant-specific data.

To bound the question, you have not bounded that frequency. You have, in fact, calculated the fact that the frequency based on the generic experience can't be any lower than the value that you used.

That's enough. We need to keep going on the --

MR. PHAN: The next topic of interest related to the reactor building annulus flooding scenarios, the applicant developed a simple event tree to calculate the associated flooding frequencies. In this scenario, an operator action was credited to isolate the pipe break before significant floods would occur.

The event tree provided five possible end states. The first one, the operator successfully isolates the flooding. The next one, the flooding would propagate to both safeguard buildings 2 and 3; the third one, the propagation to safeguard building 2; the fourth one, propagation to the safeguard building 3. And the last scenario is that the flooding we contend is inside the reactor building annulus in which the electrical penetration is.

In this end state, the applicants assumed

core damage with the direct result. That's two, three, and four. The applicant took credits for the door failures so floods would be propagated from one area to the other.

This approach results in the reduction of the end state 5 flooding frequency, which is the most important sequence of all.

The staff found that the treatment of door failures may not have been properly credited. Thus, in RAI 4, question 19-52 and RAI 120, question 19-228e, the staff requested the applicant provide the potential impacts of this finding on the results.

In the response, the applicant evaluated the impacts and stated that if failure of the doors between the annulus and the safeguard buildings is not in the models, the operators would have more time to isolate the break because the new height of the concerns becomes the elevation of the lowest electrical penetrations, which is higher than the doors.

The HEP, the human error probabilities, was recalculated to be 2.0E-4 based on 73 minutes of timing. Consequently, the approach currently provided in the FSAR and the new approach yield

similar CDF of 3.2E-8 per year.

Next slide, please. This topic of interest relates to the indirect impact from the floodings.

The staff found that the potential electrical equipment failures in other divisions or at other locations due to water contacts or pipe whip were not included in the assessment.

In its response to RAI 4, question 19-51, the applicant verified that the internal flooding PRA did not identify any potential electrical equipment failures in multiple divisions or location, other locations.

There were places where two different divisions are routed together, such as the safeguard, the switchgear rooms. However, these rooms were not included in the internal flooding PRA because no flooding scenarios were identified that could affect them.

Next slide.

MEMBER STETKAR: In the switchgear rooms, is there any chilled water piping to the ventilation coolers in switchgear rooms?

MR. PHAN: May I turn to the AREVA to

answer that?

MR. CORDOLIANI: Sure. Not in switchgear rooms, no. There is some piping in the higher levels of the safeguard buildings, but the flooding design --

MEMBER STETKAR: Okay. But there aren't separate coolers in the switchgear rooms?

MR. CORDOLIANI: I believe there is no --

MEMBER STETKAR: Okay. That's fine. That answers my concern. Thanks.

MR. PHAN: Okay. In the conclusion, the staff review found that the internal flooding PRA properly identified and selected the flooding areas consistent with the layout of the EPR buildings that are in the FSAR chapter 1.

The U.S. EPR internal flooding of 6.1E-8 is below the safety goals of 1.0E-4. And the applicant met the acceptance criteria of 10 CFR 52.47(a)(27) and the SRP.

So I would stop here and answer any questions you have on the internal floodings. Otherwise I would go to the next topic on internal fire PRA.

(No response.)

MR. PHAN: For internal fire PRAs, one open item is identified at the end of the phase two regarding the reactor coolant pump fires.

Next slide, please. This slide shows you the approach that was taken to complete the internal fire PRA. And I would not go through these steps.

So next slide, please. The first topic of interest related to the fire ignition frequency, the applicant used the method described in the RES/OERAB/S02-01 to estimate the fire ignition frequencies.

The staff finds that the fire frequency in this report was developed for the reactor oversight purposes and would not be appropriate to use to develop the fire PRA.

So in RAI 97, question 19-223, the staff requested the applicant to provide justification for the use of this report to calculate their fire ignition frequencies.

The applicant performed a sensitivity study using the NUREG/CR-6850 and compared the differences in frequencies with the one they reported in the FSAR.

The results showed that using the

research study, the research study underestimated the fire frequency in the switchgear rooms; overestimated the fire frequency in the control rooms; and gave comparable frequencies in the auxiliary buildings, turbine buildings, solid waste systems pumphouse, and the batteries room.

The applicant concluded that using NUREG/CR-6850, the estimated change in fire CDF is just about five percent.

CHAIR POWERS: Did the analysis go further and see if there are any changes in systems, structures, or components that were significant with the higher frequencies or different in their significance with the higher frequencies relative to the original analysis?

MR. PHAN: Could you please repeat your question?

CHAIR POWERS: Well, my issue is CDF is an interesting but kind of integral measure. And I'm asking, did you change anything that I think that is important in the plant in the system, structure, or component within the plant becomes important with the higher frequencies relative to what it was with their original analysis?

MR. PHAN: The application used the location-based approach to calculate the frequency. So if there are any major changes to the systems or components, that would not reflect in their frequency estimate.

The applicant performs the sensitivities using 6850. However, they only identified those components in the 6850, key components identified in the 6850.

So the staff found not any additional sequences that contribute to the frequencies significantly.

MEMBER APOSTOLAKIS: I don't think that is what you asked, but --

MEMBER STETKAR: Do you want me to rephrase it? Did the risk achievement worths of any equipment from the revised analyses with the higher frequencies change significantly?

MR. PHAN: They did not perform the importance analysis to support the second approach.

MEMBER STETKAR: Okay.

MEMBER APOSTOLAKIS: What was the answer?

MEMBER STETKAR: They did not do the analysis. So we don't know.

MEMBER APOSTOLAKIS: It's a key word, not.

CHAIR POWERS: I mean, that is the problem with these delta CDFs is it doesn't tell me anything. The CDF in general doesn't tell me anything.

MEMBER APOSTOLAKIS: Well, it tells you something.

MEMBER STETKAR: Well, it tells you something, but it's a decent question because --

MEMBER APOSTOLAKIS: Not risk.

MEMBER STETKAR: -- if a higher frequency of a fire in a particular plant location challenges a different set of equipment whose nominal failure rates are X, the relative importance of that additional equipment might change more substantially than the small fractional change in overall core damage frequency.

MEMBER APOSTOLAKIS: That's right.

MEMBER STETKAR: That is an insight.

MR. PHAN: The next topic is related to the fire ignition frequency. The staff found that either NUREG/CR-6850 or the research study control room fire frequency, using that to represent U.S. EPR

control rooms may not be appropriate.

The reason is the fire frequencies provided in these documents are derived from the existing power plants equipped with the analog technology. However, the EPR main control rooms is driven by digital computers.

In their response to the staff, they concluded, the applicant concluded, that they used .5, a factor of .5, applied to the research control room frequency estimates with the 7.2E-3 per years and used that as their control rooms ignition frequency.

The number they used in the FSAR right now is 3.6E-3 with the higher than 6850 frequency of 2.6E-3. So they concluded their estimate is conservative.

CHAIR POWERS: I have to admit that is a complete mystery to me. I would have thought things would scale on the power dissipated in the control room.

MEMBER APOSTOLAKIS: Also, that the presence of operators and humans in general there does not affect the frequency of fires at all. Is it just a matter of the equipment?

MEMBER STETKAR: Typically, I mean, right, wrong, or indifferent, there is a transient frequency for control room fires --

MEMBER APOSTOLAKIS: Yes.

MEMBER STETKAR: -- that is estimated in some -- typically it is a hardware-related frequency that is quantified, but --

MEMBER APOSTOLAKIS: And there aren't very many fires to begin with.

MEMBER STETKAR: There aren't.

MEMBER APOSTOLAKIS: Well, there are --

MEMBER STETKAR: There is a countable number of very small fires that can --

MEMBER APOSTOLAKIS: Very, very small, which are really not --

MEMBER STETKAR: That's right.

MEMBER APOSTOLAKIS: -- very relevant.

MEMBER STETKAR: But, for whatever reason, they were retained within the EPRI database using their screening criteria for potential significance or whatever. So when somebody examined those things and whatever was populated was retained, but they are admittedly small fires.

MEMBER APOSTOLAKIS: This factor of .5 is

pure judgment, right?

CHAIR POWERS: I would call it lag.

MEMBER APOSTOLAKIS: What did you say, Vincent?

MR. CORDOLIANI: I said yes.

MEMBER STETKAR: Yes. Yes was the answer.

MEMBER SHACK: Probably to both questions.

MR. PHAN: The next topic on the RCP fire scenario, the staff found out the RCP fires are excluded from the analysis.

Next slide, please. In their response, the applicant provided the reasons why they included the pump fires. And the reason is because the frequency is low. However, they performed the sensitivity and provide three scenarios associated with the pump fires.

The first one is the pump fire itself. The second one is on the pump oil fires with limited leak. And the last one is the oil pump fires with a major spill.

The staff reviewed the response and found that the conditional core damage probabilities of the

last scenarios of 1.1E-6 is low, even with a major spill in the containment.

CHAIR POWERS: I have to say that improving that leak collection system has to be one of the best design features of this plant. I get so tired of the silly oil leak fires when they are totally unnecessary.

MR. PHAN: Yes. The staff did receive the response from the applicants in the review. So this item is tracked as an open item.

Another topic on the diesel generators, the staff found that the diesel generators are excluded from the fire PRA. In response to our questions, the applicants state that because of the contribution of the diesel to core damage is insignificant, so they excluded the diesel fires from the fire PRA.

Next slide, please. The staff also asked the applicants regarding the indirect impact. The applicants respond to this question by stating that based on the concepts of the cable routings, the fire scenarios were divided such that damage to the cables routed to a specific fire area would have no impact on components located outside of this fire area.

MEMBER APOSTOLAKIS: The applicant stated that based on the concepts of cable routing. What does that mean, concepts of cable routing?

MR. PHAN: For each PRA --

MEMBER APOSTOLAKIS: What is the concept of cable routing?

MR. PHAN: First thing, they say that their cables would have three-hour barriers, protectors.

MEMBER APOSTOLAKIS: How does that affect the PRA?

MR. PHAN: And, secondly, they say that for each fire area, all these components within areas, that the cables would be routed through except for a few areas that are routed together.

MEMBER APOSTOLAKIS: So there will be no areas where there will be cables feeding power to a component somewhere else?

MR. PHAN: There are a few.

MEMBER APOSTOLAKIS: How can that be?

MR. PHAN: There are a few area.

MEMBER SHACK: He says there are going to be a few.

MEMBER STETKAR: The word no is a very

big no. The word all is a very big word.

MEMBER APOSTOLAKIS: Yes.

MEMBER STETKAR: He carefully said, a few.

MEMBER APOSTOLAKIS: A few.

MR. PHAN: Such as the control rooms and the cables spreading from that multiple division would be routed together.

MEMBER APOSTOLAKIS: But you mentioned the three-hour barrier. I'm curious how that is taken into account in a PRA.

MR. PHAN: For those that identified in the spreading room table, spreading room area, they cited they have three-hour barriers.

MEMBER APOSTOLAKIS: But how does that affect the fire PRA?

MR. PHAN: The fire PRA does not include cable routings. So that would have no input or no contribution to the --

MEMBER APOSTOLAKIS: Because if it has no impact, why is it mentioned?

MR. PHAN: In that response, can AREVA -- in their response, they just held it as they have three-hour barriers.

MEMBER APOSTOLAKIS: Yes.

MS. DIMITRIJEVIC: The three-year barrier is the fire area. This is the definition of the fire area. So if the divisions in cable spreading rooms are separated by three-hour barrier, that means only one division can be disabled by the fire. That was the assumption.

MEMBER APOSTOLAKIS: Because it is a three-hour barrier?

MS. DIMITRIJEVIC: In the division. So that is a different fire area. Even though in the same room, those cables are -- the definition of the fire area is --

MEMBER APOSTOLAKIS: I understand the definition, but the fact that you have a three-hour barrier does not mean the fire can propagate through it.

MS. DIMITRIJEVIC: Well, it's not going to propagate in three hours.

MEMBER APOSTOLAKIS: Even that I don't know. I mean, all these definitions of three-hour, two-hour barriers are so stylized that I don't know that they mean much, but maybe for your purposes, it's not relevant. In a real fire PRA, you really

have to worry about it, but for your purposes, again, it may be okay.

MS. DIMITRIJEVIC: Well, it may something change since we did that many different fire PRAs in the current industry. But the three-hour was never questioned as a fire body. Only two hours and one hour, you have combustible loads and analyze propagation. But three-hour was always good enough for the purpose of separation.

MEMBER APOSTOLAKIS: The point is that these concepts come from a different world. So when you do the PRA, you really have to look at the actual potential of damage.

MS. DIMITRIJEVIC: Well --

MEMBER APOSTOLAKIS: Well, anyway, again, just remind me. The PRA just before fuel loading will be a real fire PRA, correct?

MR. PHAN: Yes, sir.

MEMBER APOSTOLAKIS: Okay.

MR. PHAN: In the conclusion, the U.S. EPR fire CDF --

MEMBER APOSTOLAKIS: Why do you have that conclusion? You also had it before for the floods. Did anybody ever --

MR. PHAN: Yes.

MEMBER APOSTOLAKIS: What? Yes what?

MR. PHAN: This is a --

MEMBER STETKAR: One of the problems I have with this is the fire CDF is 1.8E-7, which is well below 1.0E-4. We don't care what the fire CDF is.

MEMBER APOSTOLAKIS: That is my point.

MEMBER STETKAR: We care about the total CDF.

MEMBER APOSTOLAKIS: The total. It's the total that matters. That's why I'm asking why --

MEMBER STETKAR: We don't care what the fire CDF is relative to 1.0E-4. If it was greater than 1.0E-4, that might be a problem, but we wouldn't if it was 10-80 or 10-5, even if nothing else --

MEMBER APOSTOLAKIS: There is no specific requirement to do this.

MEMBER STETKAR: You would care to do this.

CHAIR POWERS: I would care.

MEMBER STETKAR: I have one question.

MEMBER APOSTOLAKIS: You are a caring kind of guy, though. That's why.

CHAIR POWERS: I am a very caring person --

MEMBER STETKAR: I have one --

CHAIR POWERS: -- who doesn't worry about fire a lot.

MEMBER APOSTOLAKIS: I am really curious before you ask the question. Why did you put that bullet there and you do it also for floods? There is no --

MR. PHAN: Just to confirm that their fire CDF is less than 1.0E-4 and they --

MEMBER APOSTOLAKIS: It's the total that matters, not just the fire or flood, right?

MR. PHAN: Yes. That's true, sir.

MEMBER STETKAR: I do have a question on fires. And I am surprised you didn't mention it in any of your slides. Is it true that the only locations where the applicant evaluated I'll call it hot shorts, you can call it spurious actuations, were the main steam safety valve and release valve rooms and the pressurizer compartment? Did they evaluate hot shorts anywhere else?

MR. PHAN: Yes, only one place, in the main steam and the main feedwater room.

MEMBER STETKAR: They also evaluated it in the pressurizer compartment, didn't they? Say yes.

MR. PHAN: Yes.

(Laughter.)

MEMBER STETKAR: Thank you.

My question is -- no. They did definitely evaluate it in the pressurizer.

MR. PHAN: Yes.

MEMBER STETKAR: And I saw something in the main steam and feedwater compartment. Did they evaluate hot shorts in any other locations?

MR. PHAN: No, sir.

MEMBER STETKAR: Okay. So that is curious. My real question is, I read the discussion related to spurious opening of the PSRVs and SADVs in the pressurizer compartment. And values, numerical values, are assigned to the conditional probability of spurious opening or conditional probability of hot short, if we want to call it that.

Those numerical values for a motor-operated valve are at 0.17 and for a solenoid-operated valve is 0.33. As I understand it, those values were justified by using the methodology

in NUREG/CR-6850. It's referenced to appendix J, but I believe it should be appendix K.

The methodology in appendix K is a detailed circuit analysis methodology. For example, the motor-operated valve value of 0.17 that I believe they cite from appendix K is derived from a very, very detailed analysis of a particular motor-operated valve circuit that involves a nine-conductor cable with one ground circuit and a particular display and interlock configuration.

If you don't have enough design information to make general assumptions in the PRA, how do you know so much about the circuits for that motor-operated valve?

MR. CORDOLIANI: Well, you are addressing the question to me.

MEMBER STETKAR: I mean, I am assuming they are going to point to you.

MR. CORDOLIANI: Well, no. We don't have that.

MEMBER STETKAR: Okay. Well --

MR. CORDOLIANI: I mean, we don't have other information either. We don't have enough information --

MEMBER STETKAR: Okay.

MR. CORDOLIANI: So those were examples. And you don't see --

MEMBER STETKAR: No. Those are number examples. But in NUREG/CR-6850, there are generic hot short probabilities for motor-operated valves and solenoid-operated valves for a generic circuit based on actual results from cable fire testing that are substantially higher than that, twice the value for a solenoid-operated valve and depending on whether or not you use a control power transformer, anywhere from twice to four times higher for a motor-operated valve.

So if you don't know anything about the circuits, I'm curious about why you can justify those, what you characterize as example values. Why don't you use the higher values?

MR. CORDOLIANI: I cannot answer. I am not sure --

MEMBER STETKAR: Okay. Thanks.

MR. CORDOLIANI: -- what you are referring to, but we would need to check and get back to you on that.

MEMBER STETKAR: The staff had a question

about it. And you basically accepted the response. I'm kind of curious about why you accepted the response given the fact that the response seems to be -- again, I don't have the answers to the questions.

But my reading of that seemed to be saying that they justified the lower values based on applying the methodology in appendix J or K. Both of them relate to detailed circuit analysis and provide examples of particular circuit configurations, number of conductors, grounding of those circuits, the availability of control power transformers, and so forth, that doesn't seem to be that level of detailed information is available at this point. So I'm not sure how we can know so much about that where we don't know very much of anything about anything else.

I'll just leave that on the table. And perhaps you might want to follow up on it.

MEMBER APOSTOLAKIS: Can you go back to --

MEMBER STETKAR: I am done.

MEMBER APOSTOLAKIS: -- 37?

MR. PHAN: Thirty-seven.

MEMBER APOSTOLAKIS: When you say, analyze possible fire scenarios for the location,

that's where you assume that everything in that location goes, right?

Did you consider or did they consider the possibility that everything goes? And because some other piece of equipment somewhere else is down for whatever other reason, then you may have core damage? In other words, did they focus only on the losses in that compartment?

MR. PHAN: Yes.

MEMBER APOSTOLAKIS: Shouldn't developing the scenario --

MR. PHAN: I think that there are indirect impacts. And they say there are no indirect impacts. Even that's fire --

MEMBER APOSTOLAKIS: But there may be some other system somewhere else that is not affected by a fire that may be down due to some other reason.

MR. PHAN: Yes.

MEMBER APOSTOLAKIS: Wouldn't that create a scenario? The combination between losing everything in this room and this other thing being down --

MR. PHAN: Yes.

MEMBER APOSTOLAKIS: -- might be a

scenario. Is that the possibility here?

MR. PHAN: The way they developed the fire PRA that they used, the event tree and the fault tree from the internal models. And they felt those components are caused by the fires. So the other random failures are still in the sequence.

MEMBER APOSTOLAKIS: Oh. So the sequences did include this other. Okay. Okay. Okay.

MR. PHAN: And the very last topic is on the other external events. The applicant performed a qualitative screening on the high winds, tornadoes, external flooding, and external fires. For other events, such as transportation, dam failures, hurricanes, tsunami, and so on, the applicant considered those as site-specific events and chose not to evaluate them at the design certification.

CHAIR POWERS: That isn't surprising.

MR. PHAN: So, with that, I end my presentation on the external events. And I will stop here if you have any questions.

CHAIR POWERS: On external events, I don't know you could possibly think tsunami would be a site-specific event. It's just beyond me.

(Laughter.)

CHAIR POWERS: Thank you.

MR. PHAN: Thank you, sir.

MS. CLARK: Do we want to press on to our goal of 54 or not?

CHAIR POWERS: I want to press on through to page 54.

MS. CLARK: That would be me. Hi again. This is --

CHAIR POWERS: And I never contradict.

MS. CLARK: I will try to make this quick because everyone is hungry. This is Theresa Clark again. I'm back with you to talk about my review of the level 1 internal events PRA for shutdown.

I'm not going to go through the whole review process that I did before because it is really the same stuff that applies as far as the level of detail of my review.

CHAIR POWERS: You're convincing me I never want you to review anything I write.

MS. CLARK: There are no open items remaining in this section because of the early and frequent RAIs that I talked about. So I am just going to go over a couple of technical topics of

interest of the many, many that we discussed throughout the process.

As you may notice from this list, they are not particularly PRA topics, although you can rest assured that we looked at the PRA as well. They're really about the operational assumptions that determined how the shutdown PRA is developed.

The key issues are in this assumptions area because the applicant is attempting to develop an average shutdown model for a plant that is not yet operating. Outages are very unique. And so the real online model for shutdown could be different from what we see here.

So at the design stage, what is most important is to understand that the plant has been designed with shutdown risk in mind and that it's got the right design features and administrative features to make sure that they reduce risk where they can and that we understand the risk profile for the plant.

Next slide, please. The first thing I want to talk about I also discussed for the at-power model. It's just the way that the design represents a reduction in risk compared to the operating plants.

Most of the things that I talked about

for at-power also apply to shutdown. But just very briefly, we talked previously about maintenance. We expect there to be online maintenance for this plant as the way it is designed.

So just sort of on a qualitative basis, -- this isn't a PRA thing -- on a qualitative basis, you would expect less maintenance to be going on during shutdown and fewer forced outages required to do maintenance during shutdown.

So on a qualitative basis, you could think that there might be lower risk. Also, the U.S. EPR has been carefully designed with several automatic actions that take the operator out of the equation during shutdown.

The letdown during the chemical and volume control system, low-pressure reducing station automatically isolates when you get to low level, which would stop a loss of coolant through that system.

The medium-head safety injection system comes on automatically when it is needed to mitigate a loss of level. And also the RHR pumps are stopped automatically in certain scenarios. So these automatic functions reduce risk compared to a regime

where the operators have to do everything.

And next I just want to mention the benefit of an operational strategy that the applicant has described. The spent fuel pool is designed to accommodate a full core offload.

And the applicant expects that steam generator maintenance is actually going to be done at the three-quarter LOOP level when there is no fuel in the vessel.

So what that means is that, although the shutdown PRA model is mid-LOOP and it models mid-LOOP without steam generators available, in reality, shutdown may well have a much higher level, say, at the flange level. And it may not have a mid-LOOP with fuel in the vessel. And the steam generators might be available in reality.

So this operational strategy would --

MEMBER STETKAR: Run that by me again.

MS. CLARK: What they are trying to say -- and, you know, this is an operational assumption that it's possible, may change -- is that they're not going to go to mid-LOOP to do steam generator maintenance except when there is no fuel in the vessel. So when they drain down, they're going to --

MEMBER STETKAR: I don't care where they are in LOOP if there is no fuel in the vessel.

MS. CLARK: That is exactly my point.

MEMBER STETKAR: Okay. I don't understand the subtlety of being at mid-LOOP or top of vessel or no water if there is no fuel in the core.

MS. CLARK: My point --

CHAIR POWERS: The essential thing is they're not going to do any steam generator maintenance unless there is no fuel.

MEMBER STETKAR: If that is what they're trying to say --

MS. CLARK: Yes.

MEMBER STETKAR: Okay.

MS. CLARK: So what I am trying to say is they might not drain down as far and they might have the steam generators available, both of which are good things.

MEMBER STETKAR: As long as there is fuel in the core?

MS. CLARK: Correct.

MEMBER STETKAR: Okay. I've got it. Thank you.

MS. CLARK: So let's go to the next slide.

MEMBER STETKAR: Theresa?

MS. CLARK: Yes?

MEMBER STETKAR: You talk about plant operating states. Does the EPR -- and this is I know not the design. It's an operational consideration. But is it planned to do a full core offload when you refuel or are you just going to do a fuel shuffle? I know that's an --

MS. CLARK: It's a PRA assumption that they will do a full core offload.

MEMBER STETKAR: Full core offload?

CHAIR POWERS: And there is no fuel handling?

MEMBER STETKAR: Well, what I was going to ask is, does the scope of the shutdown PRA then include events that can cause loss of cooling to the core while it's out in the fuel pool?

MS. CLARK: The spent fuel pool is not within the shutdown PRA that they have done.

MEMBER STETKAR: Okay. That's interesting.

CHAIR POWERS: That is like fuel-handling

accidents are far out of scope.

MEMBER STETKAR: It is on the record.

CHAIR POWERS: Please continue.

MS. CLARK: Okay. Next slide. This is slide 51. The next subject I want to discuss is equipment availability, which relates both to the maintenance assumptions in the PRA and our SRP criteria, which says, has the applicant used risk insight to establish specifications and objectives?

Early in the review process, we've noted that the applicant documented their assumptions about what equipment is going to be available. So that was good. But some of this equipment didn't have tech specs associated with it. So we asked for various sensitivity studies.

The applicant provided both RAW values for systems and then sensitivity studies for system that might not be available. And, really, that just led us to ask them for a justification of some of these systems were quite important and why there were not tech specs for these systems, namely medium-head safety injection and the IRWST.

And the response was put in tech specs. So that was great. And I just wanted to bring this

up very briefly here because it is very supportive of the staff's conclusion that the applicant used risk to improve the design and its specifications.

The applicant determined that these were risk-significant enough to be included in tech specs. There's a criterion for putting things in tech specs based on a risk perspective. And so we have more confidence that these will be available to mitigate accidents.

Next slide. The next topic I want to discuss is the shutdown schedule and decay heat. Again, this wasn't really a safety issue or --

CHAIR POWERS: Can you confirm that fires through shutdown were also not considered?

MS. CLARK: They were considered qualitatively. And they've done some screening scenarios for us in our RAI responses.

MEMBER STETKAR: Is there any reason given the information that they have -- I mean, they have plant operating states, which basically put the plant in a configuration, several different configurations.

They don't know exactly what is going to be in or out for maintenance or those types of

things. They have fire areas defined. And, you know, admittedly, it might be a little bit difficult to estimate some frequencies, especially for personnel-induced fires during shutdown, but attempts have been made to do that.

Is there any fundamental reason why they couldn't do some equivalent level of, let's say, quantitative fire evaluation at shutdown given the information that is available, recognizing that it is not a very precise estimate? But neither is the estimate at power for fire damage.

MS. CLARK: I don't want to speak for what they could do, but they have done some quantitative evaluations as a result of our questions --

MEMBER STETKAR: Okay.

MS. CLARK: -- for specific scenarios, both floods and fires.

I believe there were three scenarios. It's in the safety evaluation. Essentially they looked at things that fires and floods could do that weren't necessarily already in the shutdown model.

And so they looked at a handful of scenarios, and then they compared the consequences of

those scenarios to what was already modeled, and it was less.

Anyway, going back to the subject of decay heat load, this wasn't necessarily a safety issue, but it was another issue where we wanted them to identify and document their assumptions. Durations of the shutdown plant operating states were originally documented in the FSAR, but it wasn't clear what assumptions went into these values. So basically we got them to tell us the assumptions. They're up on this slide.

That was fine, but if you see, they have assumed certain things about the refueling cycle. And then they have extended their amount of shutdown to account for their assumed capacity factor. This is good because it increases their exposure time. And it increases initiating event frequencies.

However, that was applied to each plant operating state. And what that meant was that they could be entering a plant operating state in an assumed later time, where the decay heat load would be lower.

And so we drilled into this a little bit to say, are there operator actions that might not

actually succeed if you entered this time earlier because you have artificially extended your shutdown schedule?

So basically they did some analyses of this. And there was one operator action that they would have less than 20 minutes, which was about their criterion. And the effect was fairly small.

The important thing here was that they needed to clearly document their assumptions here and everything related to that. So that's why I brought it up here.

Next slide, please, 53. The final technical topic is just another operational assumption that I wanted to highlight because of its effect on the risk profile.

Temporary pressure boundaries have been a problem at certain operating plants because failures of temporary pressure boundaries -- think, for example, of freeze seal. Either they could start an event or they exacerbate an event. So we got them essentially to document their assumptions about pressure boundaries. You know, you don't really need to say much more than that.

So next slide, please. This is the same

sort of slide that I gave you before for at-power. You know, the I&C stuff applies because it's all the same model. So we can't really come to a conclusion until the I&C things are resolved.

But for shutdown-specific issues, they have met the criteria. And the RAI process has resolved all of the issues so far.

And that's it.

CHAIR POWERS: Any additional questions to pose?

MS. SLOAN: Dr. Powers?

CHAIR POWERS: Yes?

MS. SLOAN: May I make one comment for the record?

CHAIR POWERS: You may.

MS. SLOAN: I feel obliged to do this to close something. When we earlier talked about the seismic margins analysis, I feel obligated to respond and say that the plant has a robust deterministic seismic design basis, which will demonstrate the earthquake capabilities in chapter 3. I just for the record want that to be clear.

CHAIR POWERS: That is great.

MS. SLOAN: Okay.

CHAIR POWERS: And I am not surprised either.

Are there any other comments?

(No response.)

CHAIR POWERS: Shall we break for lunch?

MEMBER APOSTOLAKIS: No.

CHAIR POWERS: You don't want to break for lunch?

MEMBER STETKAR: Look, I can go a week and a half without eating.

CHAIR POWERS: Good. The Chair declares a break for lunch. And we will resume at 1:30.

(Whereupon, a luncheon recess was taken at 12:30 p.m.)

1
2
3
4
5
6
7
8
9
10
11

A-F-T-E-R-N-O-O-N S-E-S-S-I-O-N

(1:29 p.m.)

CHAIR POWERS: Let's resume.

4. U.S. EPR DC APPLICATION FSAR CHAPTER 19, PRA AND SEVERE ACCIDENT EVALUATION (CONTINUED)

MS. SLOAN: Okay. So afternoon. We'll start this afternoon continuing with PRA, this time the level 2 at-power PRA, followed after that -- I've got to go back to that -- with the shutdown PRA in level 2. Okay.

MR. GERLITS: Good afternoon. My name is Dave Gertlis. I work for AREVA in the PRA Department. I am the technical lead on the level 2 at-power PRA.

A little about my background. I graduated from the University of Iowa in Iowa City with a degree in physics and chemistry in 1977. I joined the Navy, Navy Nuclear Power Program, as an officer, served on board the Ulysses S. Grant, left the Navy in 1982, and went to the Pilgrim Nuclear Power Station, where I spent 22, almost 23 years.

At Pilgrim, I got my senior reactor operator's license. And for the first five years of my career there, I trained operators: initial and

requalification.

Then the last 17 years of my career there, I worked in a group called Systems and Safety Analysis. We were the people who did 50.59 compliance with the FSAR.

But the work that led me here was actually the PRA. When generic letter 88-20, I was part of the crew that did the initial, the IPE and IPEEE for Pilgrim. And in the IPEEE, I actually did the seismic PRA portion of that with help from contractors.

I was also involved in the maintenance of the emergency operating procedures and, as an extension of that, was a member of the BWR Owners Group EOP and severe accident guidelines and helped create the severe accident guidelines for Pilgrim.

I left Pilgrim in 2005, came to AREVA, where I was involved in level 1 systems, a smattering of level 1 systems, level 2. And I'm actually also a reviewer of the level 3 PRA that was done, the MAACS 2 work that was done for the EPR. That's me.

Next slide. Okay. The presentation we are going to give today is an overview of the level 2 PRA that we have done. Our level 2 PRA was a

full-scope level 2 with containment event trees that include phenomena, systems, and human actions. Our level 2 covers all plant operating states. And the results of our analysis are release category frequencies and source terms that cover all release sizes and the timings of those releases.

All right. I'll give you an overview of the phenomena that we examined. The list includes induced reactor coolant system rupture. We looked at steam generator tube rupture, hot leg and surge line rupture, and the creep rupture of the reactor vessel.

For fuel-coolant interactions, we examined both in-vessel and ex-vessel steam explosions.

The next bullet, phenomena at vessel failure, once the core leaves the vessel, we examined the reactor pit overpressurization failure; my personal favorite actually, vessel rocketing; -- it's very interesting -- and direct containment heating.

Hydrogen. We examined the phenomena associated with hydrogen: deflagration, flame acceleration, and the deflagration to detonation transition. Extending the -- since this was a full-scope level 2, we extended out to long-term

containment challenges that included containment pressurization, seeing the incomplete melt transfer of the corium from the pit to the core spreading area and what the effects of that would be, and also the effects of extended molten core-concrete interaction with basemat penetration.

We also examined the possibility of recovering in-vessel injection and retaining the core in vessel.

This may have been discussed earlier. You have heard it discussed earlier. But we integrated the level 1 with the level 2 PRA. And as part of this integration, we were actually able to credit systems, hook systems into the event tree and the fault trees for the level 2 containment event tree.

The systems that we credited or that we used were the dedicated primary system depressurization valves. The core melt stabilization system and severe accident heat removal system, we'll look at that as an integrated whole.

And the modes that we examined were the IRWST cooling, as in level 1; spray mode for containment pressure control and we investigated

atmospheric scrubbing; the gravity-fed flooding and the forced core spreading area cooling. We also credited in the level 2 low head safety injection for in-vessel core retention and for core spreading area cooling as a backup system.

Of course, we looked at primary containment isolation system. That's come up many times, especially today. So that was part of our analysis.

And we also examined the operation of the hydrogen recombiners. And that is credited in the hydrogen phenomenological evaluation.

CHAIR POWERS: How do you handle poisoning of the hydrogen recombiners?

MR. GERLITS: We examined the reduction in the efficiency of the hydrogen recombiners by -- hold on. Could you repeat that? The poisoning?

CHAIR POWERS: Yes, poisoning.

MR. GERLITS: Yes. Actually, Bob, could you speak to that?

MR. MARTIN: Yes, I could. My name is Bob Martin. Short bio: advisory engineer, AREVA, been there 13 years, responsible for large-break LOCA containment analysis and then, of course, severe

accident.

That question has recently been asked through a series of RAIs for chapter 6. As a matter of fact, we will be sending responses to that question, in particular, within a week or so.

In the set of questions with regard to PAR survivability, we have outlined in our responses several tests that have been done, both by AREVA, through our cooperation with EDF, EPRI, a rather extensive what I will call PAR qualification suite with regard to fission product contamination specifically. The assessments were done in PHEBUS tests or at least one, if not a few PHEBUS tests, with the conclusion leading to negligible impact.

CHAIR POWERS: It is a negligible test, too. Okay. Well, so all I have to do is wait until this RAI comes in.

MR. MARTIN: Exactly. All you've got to do is wait.

CHAIR POWERS: And the staff will share with me these tests.

MR. MARTIN: That is between you and the staff.

CHAIR POWERS: And if they are all like

the PHEBUS tests, then we can discuss this again.

MR. MARTIN: Of course.

CHAIR POWERS: Okay.

MR. GERLITS: Right. All right. Next. Moving on, I will speak briefly on the level 2 human reliability analysis. Our human reliability analysis was based on the state-of-the-art severe accident guidance.

When we performed the PRA, we were in close contact with the folks in AREVA who were developing the severe accident guidelines or the operational strategies.

CHAIR POWERS: The first line must be intended to mean something to me. Based on state-of-the-art severe accident guidance?

MR. GERLITS: Yes.

CHAIR POWERS: What does that mean?

MR. GERLITS: This was the OSA, the severe accident guidelines that are being developed for the EPR fleet where they're in a further state of maturity in Europe. But we understand the basic concepts here in the States. And we were using these as the basis for the level 2 human actions we needed to take.

CHAIR POWERS: Unless this is something that somebody has developed someplace, I mean, there is no arbitrator like Professor Apostolakis that declares this the state of the art and -- I mean, it's not a review or something like that? It's some document?

MR. GERLITS: Yes, yes. I'm sorry if I wasn't clear. It's based on what we have.

CHAIR POWERS: Okay.

MR. GERLITS: Okay. Our human reliability analysis includes not only immediate actions but also includes intermediate and long-term actions that include consideration of the control room, the technical support center, and the emergency director in the evaluation and decision-making process. We hadn't seen that before in other human reliability analyses that have been done. So we investigated that.

Our human reliability analysis models the dependencies between level 2 actions or among level 2 actions and between the actions in level 1 and level 2. So you'll see dependencies within the level 2 for the human actions and across the entire spectrum.

The important level 2 human actions that

emerge from the review that we did were the operator failing to perform backup actions for containment isolation and the operator failing to enter the accident management guidelines and manually depressurize the RCS, not much else to do.

Okay. The next element I would like to speak about is the containment fragility evaluation. We developed a containment composite fragility curve for the U.S. EPR containment. And this composite fragility curve showed that we had a ratio of the median failure pressure to the design pressure of 2.9, almost 3 times. So that is a robust containment in my book.

And the reason we developed this containment fragility evaluation was when we were looking at challenges to the containment, we needed to calculate the probability of containment failure during each one of the events.

We calculated this by using the composite containment capacity distribution and a load distribution for each one of the events. We used Monte Carlo sampling for the convolution of the load and capacity distributions. And from that analysis emerged the containment failure probability.

Now, the uncertainty in the containment failure probability is accounted for in the load and capacity distributions. So we --

CHAIR POWERS: Whenever I see test means containments, test these containments -- not yours but other kinds of containments, it always fails at a detail.

MR. GERLITS: A detail?

CHAIR POWERS: Yes, something below the level of resolution of the models, ABAQUS and things like that that they use, for calculating what failure is going to occur. I think I am familiar with every single containment failure test, including the ones the Indians had done. And in every case, they always fail at a detail.

And when I remark on that, the people doing the experiments always tell me, yes, but had it not failed there, it would have failed by membrane failure at -- put in a psi. So it's okay, then, that it failed this detail.

And I said okay. I mean, I had no choice but to believe them on these things because I am certainly not going to do the calculation myself because I can't.

But then I say okay. Now, extrapolate this up to a reactor. There are lots of details, lots of details well below the level of resolution that I'm guessing is used in developing the capacity distribution.

How do you handle that?

MR. GERLITS: Our containment fragility evaluation examined some of the -- could I get some clarification on what you mean by detail?

CHAIR POWERS: Oh, usually they fail at a -- if it's steel, a flaw in the steel or a flaw in the construction or a weld or some fine feature, the construction, something that is below the gridding that you usually use in one of these finite element calculations, smaller than that, something that doesn't show up, not something that they developed a grid structure for, gloss over it and say everything in there was uniform, but it's not. And you get a failure.

I can't think of a single counter-example. In fact, I am quite positive there are no counter-examples for that. All failures are always at one of these details.

And, like I say, whenever I've asked

them, they say, yes. Well, if it hadn't failed there, it would have failed by membrane failure within another five psi anyway. So it's okay. And I fully believe them except normally when I talk about a real containment, you know, real containments have got lots of details, lots and lots of them. But, I mean, you have no hope of modeling it. I mean, it would billions of nodes if you tried to model them.

MR. GERLITS: Right. Our containment fragility was -- Nissia can step in with a little detail if I need it here, but we did a -- it was a finite element analysis of the containment. And we looked at the dome. We looked at the dome belt, which ends up being the limiting factor.

CHAIR POWERS: It's not a manway?

MR. GERLITS: We looked at the manways, the hatch, and the personnel access. Nissia, we also looked at the hatch itself, right?

MS. SABRI-GRATIER: Good afternoon. My name is Nissia Sabri-Gratier. Just a little bit of background before I answer this question. I have a Master's degree in nuclear engineering from the University of Florida. And I have an engineering degree in instrumentation for nuclear engineering

from Physics Engineering School in France.

I joined AREVA in late 2008. And I have been working on the U.S. EPR PRA with the main focus on level 2 phenomena and level 2 shutdown since then.

So basically to answer this question, when we go to calculate the composite fragility curve for the U.S. EPR and for using the level 2 PRA, we go with the information that we obtained from the structural analysis.

This was done for the U.S. EPR by having six subsections in the containment. And at this stage of the analysis because the design of the containment is not finished, we only have fragility curves for rupture.

I believe that the type of failures, sir, you are referring to when you talk about welding or small details would be mainly encompassed in leakage-type failure for the containment if I understand that correctly because the rupture is covered in the structural analysis of the six subsections.

If this small detail leads to an actual failure, rupture failure, of the containment, assumption is that it is covered in the structural

analysis that we have.

We don't have the details of the structural analysis and finite element analysis with us. We can take an action and go back with you on that. I'm not sure if that answer is completely your question that, at least from the PRA side, this is how we approach the problem of containment fragility.

MR. GERLITS: Plus, we were looking at it in terms of the uncertainties in the analysis. Beta factors that go into the creation of the fragility curve take into account variations in manufacturing or installation as well as uncertainties in the analytical methods.

MS. SABRI-GRATIER: If I may just add about the uncertainties? These are provided also to us from the structural analysis. And these typically cover the analytical uncertainty as well as the material uncertainty.

CHAIR POWERS: This is just all ABAQUS calculations?

MS. SABRI-GRATIER: I'm sorry?

CHAIR POWERS: You use ABAQUS for this?

MS. SABRI-GRATIER: We use log-normal distribution.

CHAIR POWERS: What?

MS. SABRI-GRATIER: Log-normal distribution. Oh, the finite element? I'm not sure about that.

MR. MARTIN: I think it's the content of our chapter 3.8 that discusses some of this stuff that you're asking here on like ultimate capacity and various failure points.

MEMBER APOSTOLAKIS: But the capacity is assessed by somebody else. I mean, it's not the code, the beta2 and so on. It's somebody's judgment based on whatever evidence that person has that gives you that.

MR. MARTIN: Yes.

MEMBER APOSTOLAKIS: And these are presumably inputs to whatever code you are using. Is that a correct understanding?

MS. SABRI-GRATIER: Yes, that's correct. The type of inputs we get --

MEMBER APOSTOLAKIS: And I think the question refers more to the initial assessment. You said that the betas include the design errors and so on. I don't know whether they include what Dr. Powers was referring to.

CHAIR POWERS: I think those are --

MEMBER APOSTOLAKIS: Sorry?

CHAIR POWERS: Typically what you would do in one of these calculations is the material is a little thinner or a little thicker, the strength a little lower or a little higher, things like that.

And I don't have an answer for you. I just wonder what you would do about it because I can't -- like I say, I think I'm familiar with every containment failure test, every big one anyway. I can't think of a counter-example where they didn't fail initially at a detail below the level of resolution of the calculation.

MR. GERLITS: And at this stage, we felt that it was appropriate to model containment rupture as the failure mode. We didn't feel comfortable with the level of detail to be able to take credit for a leakage that would preclude a rupture. We wanted to look at what we consider a limiting failure.

MS. SLOAN: Dana, is there a particular question you ant us to follow up on to come back to the Subcommittee?

MEMBER SHACK: Well, I would like to know what distributions actually went into the

calculation. I mean, what did you --

MEMBER STETKAR: Yes. That would be nice to see what those lower tails look like.

MEMBER SHACK: Did you have distributions of strength? You know, did you have distributions of thickness? Was there just a distribution to account for the fact that failure is going to occur, you know, distributions of failure strains?

You know, it isn't clear to me how -- I know you did the ANSYS calculation, but, you know, it really does, as George said, depend on what you use for the distribution of these other quantities.

MEMBER APOSTOLAKIS: Well, if they use fragility curves, that's it, it seems to me. The fragilities are supposed to have all of the other stuff. But I don't think they have what Dana has raised.

CHAIR POWERS: They do not.

MEMBER APOSTOLAKIS: They do not, yes.

MS. SLOAN: If I may just --

MEMBER APOSTOLAKIS: Now, that is assuming that David gave us the exact answer because they may have done something else.

MS. SLOAN: So what I am noting as the

question is what particular distributions were input to the calculations. Is that fair enough?

MEMBER APOSTOLAKIS: Right, the structural analysis.

CHAIR POWERS: Why don't you give it the --

MS. SLOAN: In the structural analysis. And I think what I would suggest is we can take that question. And it may be addressed in chapter 3. And we'll follow up with the civil structural folks to help get you a response.

CHAIR POWERS: That would keep Mr. Shack very happy. That would not be --

MEMBER APOSTOLAKIS: But that is probabilistic. Chapter 3 is deterministic, is it not?

CHAIR POWERS: Oh, it's --

MEMBER APOSTOLAKIS: You will contaminate them? Shed some light into all of this.

CHAIR POWERS: Heat perhaps.

MR. MARTIN: I would just add to give you a little perspective on the 2.9 number. For our calcs in severe accident, we used the minimum value of 2.1 or somewhere around there. So maybe it gives

you a perspective of what the distribution might be.

CHAIR POWERS: Yes. I am not objecting to either of those numbers, which are well within the experimental range. I mean, I can find experiments that match either one of those.

The question really is how do we interpret those experiments? We would like to interpret those experiments as validating our finite element curves, but, in fact, when you look in detail, they don't. In fact, they explicitly don't validate the codes.

And the argument always is yes, but the failure was close enough that the membranae failure would have occurred -- you know, if the detail hadn't been there, if it had been an absolutely perfect structure, failure that occurred within a few psi and so it is, in fact, a validation, you kind of have to believe that for the test.

I mean, some of these tests are pretty substantial in size, but then we have reactor containment. In particular, they pack all of the penetrations you have in a real reactor containment.

So the question comes about, what will I do? I've got a code, a finite element code, that I

have some confidence can do the smooth structure. I want to apply it to the structure with lots of penetrations. And I get a result.

Now, do I go in and put in one of Professor Apostolakis' distributions or do I take an arbitrary shift in things? Do I use the minimum, like you suggested here, in my analysis?

And I don't know the answer to that. I mean, I have no exact answer to it.

MS. SLOAN: Nissia, did you want to add something?

MEMBER APOSTOLAKIS: Who did your fragility, produce your fragility curves? Which company? Somebody did it.

MS. SABRI-GRATIER: Well, we took the inputs from the structural analysis. And there were inputs where the median pressure of failure and --

MS. SLOAN: AREVA. AREVA.

MEMBER APOSTOLAKIS: AREVA did?

MS. SLOAN: AREVA.

CHAIR POWERS: And what is the name of that company again? It doesn't sound very Anglo-Saxon.

(Laughter.)

MS. SLOAN: Sir, we have our own civil structural department that provides this input for us.

MEMBER APOSTOLAKIS: Good.

MR. GERLITS: Moving on, I also wanted to talk about the level 1 to level 2 integration. And when I look at the model, like I said, I've modeled other PRAs. And I end up being a visual thinker.

So I think when I think of the level 1 to level 2 integration, I like to think of it as a horizontal and a vertical integration, the horizontal integration coming from the level 1 to the level 2 though the core damage end states.

Core damage end states we defined are a set of attributes that uniquely define and group a set of level 1 core damage sequences together. They transfer these groups of sequences to the appropriate level 2 containment event tree for quantification. And since we are pumping the output of a level 1 sequence as the input to a level 2 sequence, this allows system failures in the level 1 to propagate through to the containment event tree and all the way out to the release category frequencies.

The level 2 containment event trees, as I

said, have 2 interfaces. The core damage end states, like I said, is the horizontal one. And the vertical integration is with the system models. The level 2 event tree top events are linked to the system top events in the level 1 event trees.

MEMBER STETKAR: Here is a screwdriver and a wrench question. What you said sounds good, that the level 2 event trees are linked to each sequence from the level 1 model.

So in some sense, the concept of core damage end states really doesn't apply to this model. You're not really aggregating sequences from the level 1 model into a bin that's called a plant damage state in some other constructs.

MEMBER APOSTOLAKIS: I thought that's what you said, John.

MEMBER STETKAR: Let me continue. I want to understand what they did.

MEMBER APOSTOLAKIS: Yes.

MEMBER STETKAR: As I understand it, you have actually linked the level 2 event trees to each sequence in the level 1 event tree. Is that correct?

MR. GERLITS: Yes. Well, we defined -- the end of every level 1 sequence is a consequence.

We named the consequence. We have a set of bridge trees.

MEMBER STETKAR: I'm going to get to the bridge trees in a minute.

MR. GERLITS: Okay.

MEMBER STETKAR: But in principle, there is a unique relationship between each sequence, each core damage sequence, from the level 1 event tree.

A level 2 containment event tree is hung onto that sequence. The characteristics of that, different trees may be hung on different sequences because some are high-pressure, some are containment bypass, and things like that.

So the logic structure that is hung onto each of the level 1 sequences may be different depending on the characteristics of the level 1 sequence, but you actually hang the tree. You attach the tree to each sequence.

Is that correct or am I misunderstanding what was done?

MR. GERLITS: I think that's --

MEMBER STETKAR: I think, to make sure we understand, in other constructs, people accumulate the frequency of a large number of generally similar

but individually different level 1 core damage event sequences, treat that as a de facto separate initiating event that has a defined characteristic, and then quantify that separately in the level 2 models.

MR. GERLITS: Yes. Well, that's what we did. In my personal history, that is what happened --

MEMBER APOSTOLAKIS: Vesna wants to say something.

MEMBER STETKAR: Wait a minute.

MS. DIMITRIJEVIC: I understand where John comes from. And he actually answered his own question. This is not those old core damage end states. They are used to being the direct sequence on the right containment event tree.

MEMBER STETKAR: Okay. The core damage end states do not accumulate frequency.

MS. DIMITRIJEVIC: No, no.

MEMBER STETKAR: And you quantify separately --

MS. DIMITRIJEVIC: No, no. Just direct them to the right containment event tree.

MEMBER STETKAR: Good. I'm really glad

to hear that.

MEMBER APOSTOLAKIS: So there is one huge sequence all the way.

MEMBER STETKAR: Yes, yes. So in that sense, their concept of core damage end states is simply a road map that says, hang this tree on that sequence.

MEMBER APOSTOLAKIS: Which I believe is also -- I mean, this connection is what Sandia did in 1150, right, the APT, accident progression tree?

MR. GERLITS: We also defined them because they're a phenomenon in the level 2, but --

MEMBER STETKAR: Depend on --

MR. GERLITS: Yes, meet certain characteristics.

MEMBER APOSTOLAKIS: Now we understand.

MEMBER STETKAR: However, back to my screwdriver and wrench perspective on life, you mentioned these -- I've forgotten. I think you called them bridge trees. I've seen them called linking trees.

It's a nice concept that says an event tree is actually physically attached to each sequence. I suspect that's not really the mechanics

of the process because I've seen references to these bridge trees, which means there is probably some other logic going on in between there. Is that true?

MR. GERLITS: Sometimes yes, sometimes no. It depends on the --

MEMBER STETKAR: Okay. In the sometimes yes cases, what does that logic do? The event tree guy is smiling because he kind of knows.

MS. SABRI-GRATIER: If I may just maybe partially answer that question? In the cases where the logic is not simply to link the core damage end state to define a containment event tree, we look at depressurization. And that is the early stage of the event tree in the level 2 release.

So, for example, we have first stage of high-pressure containment event tree, where we would test for operator depressurization or induced tube rupture or induced tangential tube ruptures. And if depressurization is successful, then the sequence is now sent to a low-pressure containment event tree, instead of going through the high-pressure containment event tree.

MEMBER STETKAR: So there is actual logic in that bridge tree that says, is depressurization

successful, that subdivides that sequence?

MS. SABRI-GRATIER: Yes, sir.

MEMBER STETKAR: Oh, I didn't know. That's interesting.

MS. SABRI-GRATIER: That's the first stage. It might not be called linked tree, but that's the first stage of, for example, the high-pressure containment event tree. The first of the linked trees are linked with more simplified logic

MEMBER STETKAR: Because what I was getting back to is a bit of perhaps old history on the Risk Spectrum code. And that is that in many cases, at least in the past, Risk Spectrum didn't do very well transferring across linked event trees, things like sequence-specific boundary conditions. It just didn't keep track of those things very well.

So that if you were using a specific success criterion for a particular system, let's say SAHRS or LHSI or something like that, in the level 1 model, when you tag the level 2 model to it, you lost the information about what those success criteria were.

It was just simply, like I said, a

screwdriver-wrench-type thing and that people in these linking models had to become fairly clever about how they reorganized things to get supposedly the right boundary conditions set up for then the quantification or the linking of that fault tree in the level 2 model.

MR. GERLITS: That was one of the other reasons why we used the core damage end states. We used the core damage end states to identify situations where we needed to --

MEMBER STETKAR: Yes, but the core damage end states don't take, directly take, care of the level of detail that I'm talking about. And that is boundary conditions that affect consistent success criteria for the same system in both chunks of the model if you want to think of it that way.

So I don't know whether you had to do that. I mean, I was kind of leading out -- I didn't realize that there was some additional logic in this linking that looked at things like, was depressurization successful so you could send what started out looking like a high-pressure melt to a low-pressure tree.

MS. SABRI-GRATIER: For example, if I can

just add something? We have defined something like 30 core damage end states. And we tried, really, to use very specific conditions to assign the core damage end state.

So in a way, we really tried just by putting that flag of the core damage end state -- we know afterwards in level 2, for example, if the injection was successful or not.

Afterwards, when we entered the containment event tree itself, whatever we need for success criteria to test for the injection, we would have the fault tree that was the same that was in the level 1.

MEMBER STETKAR: I don't want to take up too much time because we need to talk about phenomenological issues. I just want to make sure. Let me ask the corresponding screwdriver and wrench people, did you have to be careful of the way in which you transferred boundary conditions between the level 1 and level 2 interface?

MR. CORDOLIANI: And that is an excellent point because, actually, it's true that until the late 2000s, with the Risk Spectrum used, it's still possible to propagate a boundary condition from an

event tree to another.

We did not use boundary conditions for that. I think we used some properly through level 1 trees and some properly through level 2 trees. But whenever we had to carry over information from level 1 to level 2, we actually used the events, like those flags or --

MEMBER STETKAR: Okay. That's the way you did it.

MR. CORDOLIANI: Yes.

MEMBER STETKAR: That's better. Good. Thanks. Yes. Because follow-up was going to be, did the staff look at that? It's places where historically we found people need to be very clever when they link those event trees together if you're using a lot of boundary conditions. And we found problems where clever people have made clever mistakes.

But if you didn't need to do that, that's really good news. So thanks. It's a really subtle point, but when you talk about linking these models together at a high level, it sounds like you just wire them together.

And it's a straightforward process that,

indeed, everything is fully integrated. It's fully linked. It's one big model. And sometimes in practice, that is not quite true.

MR. CORDOLIANI: You would be happy to know that the latest guidance now enables boundary conditions to be --

MEMBER STETKAR: Is that right? They've finally done it?

MR. CORDOLIANI: Yes.

MEMBER STETKAR: That's great news. I mean, they've been promising that for a long time. So good.

MR. GERLITS: All right. Moving, moving along, I will briefly discuss the source term analysis methodology. We defined 24 release categories. And the attributes associated with these release categories included whether it was a containment bypass situation or not, the time frame for the containment failure, the type of containment failure, the use of containment spray, and the status of core melt cooling.

We performed the source term analysis using the MAAP code MAAP4.0.7. And the results of this source term analysis included the release

fractions for the 12 fission product groups that our MAAP model tracks, the release height, the timing of the release, and the plume energy. This is the information that was carried across to MAACS 2.

One of the issues we needed to wrestle with or if level 2 was to define what large release was. And we decided in our process that we would focus on the large in large release, and we wanted to feel comfortable that we were carrying forward the precedence of what had been done in the industry.

So we defined our definition of large release as any release category with a release fraction of iodine, cesium, or tellurium above the range of between two and three percent. So we classified these as large releases.

MEMBER APOSTOLAKIS: Of what? Three percent of what?

MR. GERLITS: The release fraction. So it's of the core inventory.

MEMBER APOSTOLAKIS: Core inventory.

MR. GERLITS: Yes. And our release fraction, our definition of large release, we found is conservative with respect to the early fatality QHOs, the quantitative health objectives that are

defined in the NRC safety goal policy. And, as a result, our bottom line for large release, as you have seen before, is 2.8E-8.

You can see in this picture the --

MEMBER APOSTOLAKIS: Is that straightforward, Dana?

CHAIR POWERS: Say that again.

MEMBER APOSTOLAKIS: Go back to the previous slide. The second bullet, is that a straightforward calculation that if you take three percent of the inventory, that with respect to early QHO? It's not obvious to me.

CHAIR POWERS: I have no idea.

MEMBER APOSTOLAKIS: Okay.

CHAIR POWERS: Usually we ask questions like, what is the dose at the site boundary --

MEMBER APOSTOLAKIS: Yes. Yes.

CHAIR POWERS: -- and the worst two hours of the accident and things like that. The dose would be hellacious at two to three percent in the --

MR. KHATIB-JAHBAR: Mohsen Khatib-Jahbar, ERI. Typically, George, for a large power reactor of 1,000 megawatts, --

MEMBER APOSTOLAKIS: Yes.

MR. KHATIB-JAHBAR: -- the early fatality threshold is approximately five percent according to iodine and cesium. So for 1,500 megawatts, this is okay. Fifty-three percent is reasonable, I think, because typically you talk one early fatality within a certain distance if you consider that as being a safety goal type objective. This will be well within that.

MEMBER APOSTOLAKIS: Okay. That is good to know. But you wouldn't call it conservative. You said reasonable.

MR. KHATIB-JAHBAR: No. It's reasonable.

MEMBER APOSTOLAKIS: Reasonable. Okay.

MEMBER SHACK: It is in the Brookhaven LERF thing. There is a large release study that the staff did. And they get 2.5 to 3 percent of iodine, thorium as one --

MEMBER APOSTOLAKIS: So somebody --

MEMBER SHACK: -- frequency within one mile.

MR. KHATIB-JAHBAR: That is for 1,000 megawatts.

MEMBER APOSTOLAKIS: Okay. That's fine. That's fine. What was the correction? I'm sorry.

Bill?

CHAIR POWERS: Bigger plant.

MEMBER APOSTOLAKIS: Bigger plant.

CHAIR POWERS: I mean, this is just the definition for what they're using for what they mean by large. It's definitely one that would get your attention. Well, it's at 22 million curies.

MR. GERLITS: All right. We see here a slide showing a figure of the distribution of the contributions to large release frequency.

The greatest contribution was from the family of release category 300, early containment failure due to containment rupture. The second contributor, at 20 percent, was steam generator tube rupture.

And the third highest, coming in at four percent, was containment isolation failure. And release category 800, the interfacing system LOCA, has only contributed one percent.

CHAIR POWERS: When you say failure due to rupture, you're just including everything, pressurization, penetration, hydrogen combustion? They're all --

MR. GERLITS: All.

CHAIR POWERS: However that occurs?

MR. GERLITS: Yes.

MEMBER STETKAR: Is that interfacing system LOCA frequency contribution based on -- I'm going to have to kill myself when I say this, but point estimate values or is it based on the mean values of the interfacing system LOCA frequencies? I'm not going to say that again.

MR. GERLITS: I believe it was the point estimates.

MEMBER STETKAR: Okay. So it could be considerably higher if you used the mean values because some of those interfacing system LOCA frequencies, the difference between what's called the point estimate and what's called the mean, whatever those are, is measurable. And I'm not talking about hugely, but it could be a factor of six, five or six or seven or something like that.

MR. GERLITS: It could be higher.

MEMBER STETKAR: Okay.

MEMBER APOSTOLAKIS: This is the place where the state-of-knowledge correlation really makes a difference because of the spread of the distributions. They're really wide. So if you --

MEMBER STETKAR: In many --

MEMBER APOSTOLAKIS: Say point estimate, John.

MR. GERLITS: All right. The top large release frequency sequences and phenomena are discussed on this slide. And in this case, the initial, the results that are in the FSAR are that the top LRF sequences for internal events was containment overpressure failure due to unmitigated steam line break inside containment. That was the highest contributor. And coming up in second place was the steam generator tube rupture from initiating events that lead to core damage.

For the top LRF sequences in fire and flooding, with the steam generator tube rupture initiating event removed where early containment failure due to hydrogen flame acceleration loads and the high-pressure core damage sequences with thermally induced steam generator tube rupture.

The top phenomena that contributed to LRF are, as I alluded to earlier, the thermally induced steam generator tube rupture that occur for small/seal LOCAs and containment failure occurring due to loads from an accelerated hydrogen flame in

the lower or middle equipment rooms. So these are our phenomena.

CHAIR POWERS: When you say accelerated hydrogen flame, do you mean a flame that accelerates up to the point that you get shockwave?

MR. GERLITS: The process, that process of --

CHAIR POWERS: Do you get high enough hydrogen concentrations to accelerate up into a shockwave?

MR. GERLITS: Our analysis showed that we were -- let me get my notes out.

MS. SABRI-GRATIER: If I may, just --

MR. GERLITS: Go ahead.

MS. SABRI-GRATIER: -- in the meantime, add some details to this? Analysis has shown that in a limited number of nodes and for extremely short period of time, you could indeed exceed the flammability limit. And we used that to evaluate the probability of having containment failure due to flame accident duration.

We also considered that in cases where we had prior to vessel rupture partial damage. So this is why we have, indeed, probably containment failure

due to flame acceleration.

CHAIR POWERS: The flammability limit is not the issue here. It's can you get sufficiently above the flammability limit that deflagrations will accelerate to the point they create shockwaves?

MS. SABRI-GRATIER: Well, in some cases we took some conservative assumptions as far as the distant concentration, which if it were higher, it would inert those specific nodes. And we did not want to rule it out. So it was considered as a possible potential failure mode from hydrogen combustion loads.

CHAIR POWERS: It's your story.

(Laughter.)

MR. GERLITS: When we saw these combinations of nitrogen steam, oxygen, and hydrogen, we tagged that. And then we went back in the areas. We went back and looked at what would the results of flame acceleration be in those places.

CHAIR POWERS: I see. So you looked at your concentration loadings. And then you said, what if I had a deflagration-to-detonation acceleration in here? Is there anything I could destroy? So it's really quite conservative?

MR. GERLITS: Yes.

CHAIR POWERS: That's very conservative.

MR. GERLITS: All right. So the conclusions from our analysis were that the phenomena of containment failure we have examined on a plant-specific basis using state-of-the-art techniques.

Our large release frequency is five percent of CDF for all initiators. And our at-power conditional containment failure probability is at five percent. And this meets the Commission's goals of a conditional containment failure probability of less than .1.

And I believe that's it. That's it for me. I'll turn it over to Nissia.

CHAIR POWERS: Are there any other questions about this other than the question that I cannot remember when the Commission said that the containment failure probability should be .01?

MEMBER APOSTOLAKIS: I don't remember that.

CHAIR POWERS: Maybe our memory just fails us.

MEMBER APOSTOLAKIS: What I remember is

that there were either the LRF at the time should be 10-5 or less or the CCCCCC should be .1, which is equivalent, really, because 10-4 CDF means -- but this is a little new to me. Anyway, they meet it.

CHAIR POWERS: And what else would you expect for double containment?

MEMBER APOSTOLAKIS: Yes, I guess that's true. Don may be able to shed light.

MR. DUBE: Don Dube, NRC staff. There are several policy papers, late '80s, early '90s, where the staff proposed and the Commission approved goals for new reactors. The staff proposed 10-5 CDF, and the Commission came back and said, no. 10-4.

The staff proposed 10-6 large release frequency, and the Commission approved that. And then there was also a deterministic goal for containment and a probabilistic goal, a conditional containment failure probability of .1, and then also for the most likely accident sequences leading to core damage, for at least 24 hours, that the containment maintain its integrity in the short term and also in the long term.

The Commission did say that this .1 conditional containment failure probability is --

I'll call it a loosey-goosey goal in the sense that they didn't want the design to be such that we sacrificed core melt prevention at the expense or you did not have core melt mitigation at the expense of core melt prevention.

So, in other words, if you look at some of the systems that I used to prevent core damage and mitigate core damage, there may be pools of water. And if you have a choice of using this pool of water to mitigate a core damage accident or use it to prevent, you are better off using it to prevent. So the containment performance is not always independent and completely decoupled from the core melt prevention.

So the .1 is a very --

MEMBER APOSTOLAKIS: But .1, though, really, I don't know what it means. If you go to the 1150 results and you look at the uncertainties that are there in the figures on this containment, conditional containment, failure probability, the uncertainty is essentially between zero and one. Okay? So it's really --

MEMBER STETKAR: For phenomenological type stuff?

MEMBER APOSTOLAKIS: It's level 2, yes, level 2. So, I mean, maybe .2 is a point estimate.

(Laughter.)

MEMBER APOSTOLAKIS: But based on the uncertainty, it seems to me it's all over the place. It's not quite one. It's a little less than one.

MR. FULLER: This is Ed Fuller. Excuse me, George. I could not hear a word you said then. I think it was very important. Could you repeat it?

MEMBER APOSTOLAKIS: I wasn't loud enough, Ed?

MR. FULLER: My hearing is not so great.

MEMBER APOSTOLAKIS: Okay. Okay. We keep talking about the conditional containment failure probability of .1 as some sort of a goal. My point was that I don't know whether that is a meaningful goal when I go to NUREG-1150 and I look at the uncertainty they report on that conditional probability, which is essentially all over the map. It's essentially between zero and one.

That was the comment. You don't have to comment, but go ahead.

MR. FULLER: Just a little. From our own perspective, when we look at that particular

criterion, we say about .1 is okay. We don't get excited unless it's getting up close to .2 or so. And then we get excited.

MEMBER APOSTOLAKIS: Is that the mean value you are referring to?

(Laughter.)

MEMBER APOSTOLAKIS: Well, it has to be because, I mean, if I have all this uncertainty, I can't --

MR. FULLER: All right. Let's back up a little bit. A large release is a nebulous definition, start point.

MEMBER APOSTOLAKIS: Correct.

MR. FULLER: And we just saw what AREVA is using, two to three percent of volatile fission product release of the core inventory. Other applicants have more conservative definition large release frequency. For example, GE for the ESBWR says anything above tech spec leakage is a large release.

So when you see ambiguity like this, you cannot take the .1 as something to hang your hat on. So we pay very careful attention to 10-6 large release frequency guideline and not so much to the

CCFP.

MEMBER APOSTOLAKIS: That makes sense to me.

MEMBER SHACK: Even though your large release varies from a very small one to a fairly sizeable one.

MEMBER APOSTOLAKIS: Essentially I think what Ed said is it's a judgment call.

MEMBER SHACK: Yes.

MEMBER APOSTOLAKIS: They look at their analysis, and they make a decision yes, this is reasonable or, it isn't, really. It's not a criterion, as it shouldn't be, I think, in this case.

CHAIR POWERS: As you have often advocated, fuzzy lines here.

MEMBER APOSTOLAKIS: Well, not fuzzy.

MR. FULLER: I can't hear you.

MEMBER APOSTOLAKIS: It's not bright. It's not bright.

CHAIR POWERS: No bright light.

MEMBER APOSTOLAKIS: Fuzzy means other things.

CHAIR POWERS: I would go on to bright level 2 for shutdown.

MEMBER APOSTOLAKIS: That's very good. That's a very --

CHAIR POWERS: I am dying to hear how we handle shutdown level 2.

MEMBER APOSTOLAKIS: Is that the infamous standard, ANS standard, out now? I am confused. The shutdown PRA, is that official? Is it out?

MS. SABRI-GRATIER: Yes.

MR. REINERT: The shutdown PRA standard is not officially --

MS. SABRI-GRATIER: Sorry.

MEMBER APOSTOLAKIS: It's not? Okay.

MS. SABRI-GRATIER: The shutdown in level 2 period for the U.S. EPR is officially on the -- sorry.

So, again, my name is Nissia Sabri-Gratier. I will be presenting the shutdown level 2 PRA. Before I start, I would like to just maybe to remind what is the scope of the level 2 PRA.

We have, really, three main benefits from doing that. First, we understand better what is the containment performance during shutdown conditions. We gain more insights into important phenomena, components, and operator actions. And also we can

evaluate the differences between source term from power operation and the shutdown operation.

Next slide, please. This will be a little bit shorter than the level 2 at power because this analysis is really structured similarly to the at-power level 2. In fact, elements of the at-power level 2 PRA are assessed for their applicability in shutdown. If they are applicable and bounding, then we justify using them in the shutdown. If not, we have a new analysis.

There are many conditions that are different between the power and the shutdown that lead ultimately to different results in the shutdown level 2 PRA. And these are Lower decay heat levels and pressures, which, for example, we found resulted in the preclusion of the induced hot leg rupture and modification of the end use steam generator tube rupture probabilities.

We faced some limitations in modeling in open RCS using MAAP, which is the level 2 code we are using. And that is mainly in POS D and E, where the RCS is open.

We had an additional system to model. And that is a containment hatch with the related

operator actions for hatch closure sequences. Of course, we have a higher likelihood of having the containment open or the containment penetrations being open.

And, finally, due to different setpoints, for example, for the pressurizer and also the operation of the residual heat removal system, we needed a new evaluation of the containment failure due to hydrogen combustion loads.

MEMBER STETKAR: Remind me. There are too many things muddled up. What is the functional definition of core damage in the level 1 shutdown models? What determines that I reach a thing that is called core damage in the level 1 shutdown models?

MS. DIMITRIJEVIC: It is peak cladding temperature above 2,200.

MEMBER STETKAR: So you also use that in -- okay. You're apparently modeling operator actions to mechanically close/reclose the equipment and personnel hatches. Is that true?

MS. SABRI-GRATIER: Yes, correct.

MEMBER STETKAR: Have you looked at how much time is required to do that and what dose rates might be --

MS. SABRI-GRATIER: Yes.

MEMBER STETKAR: -- what the people doing this might be getting in terms of a dose rate in terms of if you were going to send me out there to do it. I might, for example, turn in my resignation and go home.

CHAIR POWERS: No one would trust you to close.

MEMBER STETKAR: Nobody would even trust me to write my name anymore. That's okay.

(Laughter.)

MEMBER STETKAR: No. Seriously, some of the things that people have been concerned about that by the time you get to even a condition that precedes what is defined as core damage for the level 2 models, like --

MS. DIMITRIJEVIC: I have a correction to make on the definition of shutdown, definition core damage.

MEMBER STETKAR: Okay. That's good. I'll listen to you.

MS. DIMITRIJEVIC: It's very important. You asked me for sufficient core damage, and I just gave you it automatically for that power.

MEMBER STETKAR: Yes.

MS. DIMITRIJEVIC: Actually, the definition for core damage at shutdown is any moment when the core start being uncovered, in any moment when core is uncovered, that is timing --

MEMBER STETKAR: Covered.

MS. DIMITRIJEVIC: Yes.

MEMBER STETKAR: But typically you would have boiling. It depends on the scenario.

MS. DIMITRIJEVIC: Boiling could have occurred before that.

MEMBER STETKAR: One that could be occurred?

MS. DIMITRIJEVIC: Yes.

MEMBER STETKAR: So you could have a steam environment --

MS. DIMITRIJEVIC: We could have a steam environment.

MEMBER STETKAR: -- in the containment and propagating out into wherever the hatches are?

MS. DIMITRIJEVIC: That's also true, but, now --

MS. SABRI-GRATIER: I will answer this part of the question.

MEMBER STETKAR: Thanks because that's what I thought I remembered, but I wasn't sure.

MS. SABRI-GRATIER: So, of course, we did look at the environment habitability inside containment in the case of accidents where the hatch was open and we had to send operators inside to close it.

We started by basing our analysis on a criteria that seemed reasonable for sending operators inside. And those were, of course, radiation level inside containment but also temperature. And the different accident runs we have done using MAAP have shown that the increase in temperature to -- we have a limit of 50 degrees C., 122 Fahrenheit. That would be already our criterion to not be able to send operators inside. And that precedes uncovering of the core, which for us is the onset of having radiation environment inside the containment.

MEMBER STETKAR: Okay. It's good to hear you took that. Yes. The specific temperatures and things, you know, you can discuss that. Because I've talked to a lot of people who said by the time you get to the actual act of boiling, they aren't going to send anybody in there. They have other guidelines

that say we're going to fall back to plan C, for example.

So I'm glad. It sounds like your analyses account for a reasonable margin.

CHAIR POWERS: It did not take much more than anybody knew to make that extremely difficult to have it.

MEMBER STETKAR: That is right, but, as I said, assuming that they reasonably accounted for that, allowing them enough time prior to getting to the top of the core, they probably did okay.

MEMBER APOSTOLAKIS: Dana?

MR. FULFORD: My name is Jim Fulford. I'm a part-time working member of the working group for the development of level 2 PRA standards. And the discussion of core damage is the subject of discussion at the moment.

Where it stands currently is core damage is a prolonged state of insufficient cooling of the reactor core, which facilities oxidation of fuel cladding and material damage to a sufficient quantity of active fuel to result in the resultive fission products which if transported to the environment could result in measurable off-site public health.

MEMBER STETKAR: So that definition is much more restrictive than the criterion they use, which is basically --

MR. FULFORD: They're being conservative.

MEMBER STETKAR: They're being conservative. That's good.

Now, my concern was the consistency of what is being defined as core damaged versus the conditions for which you are taking credit for operator actions to reclose the hatch only because the open hatch plant operating states populate a fairly fraction of the outage. So good. Thanks.

MEMBER APOSTOLAKIS: Well, I mean, I looked at your slides later. You don't come back to the issue of operator actions.

MS. SABRI-GRATIER: For hatch-closing?

MEMBER APOSTOLAKIS: For anything on shutdown. So the question is, how did you model those? I mean, you produced some probability somewhere because it's a PRA. You used the ASEP methodology here?

MS. SABRI-GRATIER: We actually used the SPAR-H methodology the same as level --

MEMBER APOSTOLAKIS: SPAR-H?

MS. SABRI-GRATIER: SPAR-H. Yes, SPAR-H methodology, the same as the level 2 at power.

MEMBER APOSTOLAKIS: How did you decide to use SPAR-H?

MS. SABRI-GRATIER: That was decided early on, before the level 2, very early in the level 2.

MEMBER APOSTOLAKIS: Was that conclusion reached that the reason was what?

MS. SABRI-GRATIER: I think maybe somebody from level 1 can answer better that question since we --

MEMBER APOSTOLAKIS: I'll tell you I will speculate. It's the nice tables they have. They have very nice tables with numbers.

MS. DIMITRIJEVIC: We did respond to this question yesterday if you believe it. It came out why did we decide on SPAR? At this moment maybe we have to choose our methodology, which was early in that --

MEMBER APOSTOLAKIS: And that was easy.

MS. DIMITRIJEVIC: We can tell that this is much more appropriate in design certification because it allows a relative ranking versus a

lapse-over. So it shows you better, I mean, how --

MEMBER APOSTOLAKIS: Now let me understand this situation. I appreciate that. If this design is confirmed, not -- what is it? Certified. Certified.

(Laughter.)

MEMBER APOSTOLAKIS: If it is certified and then before fuel loading, there is a PRA submitted, is it a correct understanding that if you keep using the SPAR-H and somebody objects, you will say nobody will certify it, so it's okay? Because in my view, it is not the appropriate model. So how does the legal part work here?

MR. FULLER: I think you are right.

MEMBER APOSTOLAKIS: You think I am right? Which way, that you cannot question the method?

MS. MROWCA: I am not sure if I have the correct answer. This is Lynn Mrowca. And that's why this morning I was saying that we are very sensitive to the concept of finality.

MEMBER APOSTOLAKIS: That's exactly what it is.

MS. MROWCA: Yes. Yes.

MEMBER APOSTOLAKIS: I mean, if that is the case, if the Committee also blesses and the Commission, of course, the method that is used, I, for one, would expect a very different letter coming out of the ACRS than if there is no finality.

MR. DUBE: Don Dube. The PRA is not part of the design basis. So the applicant is free to change the methodology. They can go through a 50.59-like process.

MEMBER APOSTOLAKIS: It is not the applicant that worries me, Don. It is you.

(Laughter.)

MEMBER APOSTOLAKIS: What are you going to do? The applicant may choose to do whatever they want, but what if they come back and say SPAR-H and you guys blessed it? Do you have a legal room there to say no, we didn't bless the method?

MR. COLACCINO: If I could?

MEMBER APOSTOLAKIS: Yes, sure.

MR. COLACCINO: It's Joe Colaccino. Clearly the question -- that's probably why I am answering right now -- is that in the certification, what would require the staff to do an additional review? What are the regulatory requirements that

would follow on after this?

And the answer -- I think you're hitting on it -- is there wouldn't be any afterwards. The regulations that are in effect for PRA after the certification then extend to that one year before fuel load.

But the staff doesn't look at that review. So the staff would not conduct a review of that, of the PRA, at that point. That is a requirement that is on the licensee at that point.

MEMBER APOSTOLAKIS: The staff will not review the final PRA before the --

MR. DUBE: There is not requirement --

MS. MROWCA: It's available for inspection.

MEMBER APOSTOLAKIS: I'm sorry?

MS. MROWCA: Available for inspection.

MR. COLACCINO: Right. And that is review versus inspection. That is something that we are also very sensitive to as well.

MEMBER STETKAR: I mean, we can discuss HRA methods, but it comes back to the issues that I was talking about in terms of completeness of contributors and things like that.

MEMBER APOSTOLAKIS: It is the finality issue.

MEMBER STETKAR: Right. I thought I was hearing the fact that, well, as long as everything is documented at this point, the staff would have another chance to basically review the final resolution of those deficiencies or omissions at a later stage. But now I'm hearing that you don't.

MEMBER APOSTOLAKIS: So that is part of 52? It's part of part 52, what you just said?

MR. COLACCINO: Part of 52. Yes, it is.

MEMBER APOSTOLAKIS: It says --

MR. COLACCINO: I mean, we --

MEMBER APOSTOLAKIS: -- that you can inspect it, but you don't review?

MR. COLACCINO: Now, I don't know if the inspection is actually -- I don't have a reg book in front of me. But if that's the actual -- we would not be conducting a review.

MR. DUBE: I don't believe the word inspection is in part --

MEMBER APOSTOLAKIS: It would be very strange, though, it seems to me to spend all of this effort reviewing a PRA for what is really a paper

reactor. When they are ready to go and load the fuel, we don't review that PRA. Wouldn't that be strange?

MR. DUBE: If I might add, the purpose of the standard, the purpose for the regulations requiring that the COL holder at the time of fuel load has to get the standards endorsed by the staff one year before, is the staff is through reg guide 1.200, which endorses the ASME standards, relying on the industry consensus standards to perform that function.

In fact, even moving forward for the current fleet of operating plants, the whole idea of reg guide 1.200 and developing standards is to minimize the staff's, the need for the staff, review of the baseline PRA.

MEMBER APOSTOLAKIS: But isn't the final decision that there is adequate protection of public health and safety, the final thing that says, go ahead and operate?

At that time, don't you have to look at all of the documentation in front of you without saying, gee, that was approved five years ago and this and that? How can you make that declaration if

you don't go back and look? I mean, you look at the real evidence that you have in front of you?

CHAIR POWERS: Well, there would be an examination of the PRA for the COL application in some detail before you went to -- the Commission would vote. And then following that voting, they could load fuel.

MS. MROWCA: If I can add something, too.

CHAIR POWERS: Yes?

MS. MROWCA: This is Lynn Mrowca again. I mean, one thing that we will inspect is for maintenance rule. And that is that prior to fuel load, the inspection finding to load fuel, that we do a maintenance rule inspection. I mean, at that time we can look at the PRA and make sure that it is acceptable for use in the maintenance rule.

MEMBER APOSTOLAKIS: Well, I mean, what Dr. Dube said is actually encouraging because the staff is in the process now of looking at all of these human reliability models and coming up with maybe one or two.

So presumably one year before they load fuel, that will be in place. And then there will be a legitimate question, did you use this thing that

has been approved?

But this is something that is not very clear to me. And I would like to understand it better. What kind of review will take place?

CHAIR POWERS: That COL application, that has to be approved.

MEMBER STETKAR: But we are hearing that there is no requirement for an actual formal staff review of the PRA at that point.

MEMBER APOSTOLAKIS: Except what Don says, that they have to convince the NRC of --

MEMBER STETKAR: Based on the COL application, which is before -- Don is talking about fuel load, one year before fuel load. Dana said COL application, which is much more before that.

MEMBER APOSTOLAKIS: Yes. Anyway, I don't want to hog, but that is not clear to me.

MEMBER STETKAR: It is somewhat disconcerting. If in principle the PRA were complete and conservative at the DCD, at the design certification stage, such that any refinements would perhaps remove conservatism, you would feel a little bit more comfortable about how the subsequent inspections or reviews or whatever they are are

performed.

However, if the PRA has some deficiencies in it at the design certification that the staff has documented and says, well, they'll be cleaned up later, then it's more important to make sure that somebody systematically assures that, indeed, they are cleaned up to everyone's satisfaction, you know, not necessarily perfect but that at least a systematic second look is taken or we need to be a heck of a lot more careful right now.

MEMBER APOSTOLAKIS: That's what I said. That's what I meant when I said the letter would be very different.

MEMBER STETKAR: That's right.

MS. DIMITRIJEVIC: Well, we are still concerned about this SPAR, though, because that is in NUREG-6883. And it's the first time that we heard that this metal may not be acceptable. So we are really surprised by this.

The SPAR-H method may not -- this is something which we -- before all of this very interesting discussion. We are very interested in the results of this discussion.

But also you started saying the SPAR-H is

not considered acceptable today?

MEMBER APOSTOLAKIS: I didn't say that, but what the staff has told us when questioned about SPAR-H is that it was developed to almost the exclusive use of the SPAR models during the SDP process and that it was not intended to be an HRA model.

Now, if you ask me, you know, where is that written, I don't think it is written anywhere.

MEMBER STETKAR: That is something that is used in the reactor oversight process.

MEMBER APOSTOLAKIS: Oversight process doing --

MEMBER STETKAR: It's a simple-minded way of inspectors being able to get a ballpark.

MEMBER APOSTOLAKIS: And then if the ballpark is disturbing, then they go to more details. You know, they argue back and forth with the licensee. But it was not intended to be an HRA model, as, say, ATHENA or other --

MS. DIMITRIJEVIC: Well, this is a news for us.

MEMBER APOSTOLAKIS: Yes.

MS. DIMITRIJEVIC: I mean, we thought it

was a fully acceptable method.

MEMBER APOSTOLAKIS: Okay.

MS. SABRI-GRATIER: Thank you.

Next slide, please. Okay. The release categories is defined as using the same criteria at power. Nothing has changed. The source term assessment was a little bit different and was mainly driven by the pressurization level and the status of the primary system.

For example, in plant operating state C, we have a primary that's initially pressurized and closed. And POS D and E, we have a primary that is initially depressurized and open. There are very specific shutdown conditions that impact, actually, the source term evaluation.

These are low decay heat levels, low RCS coolant inventories in a number of plant operating states. There is the possibility of air ingression when the RCS is open that could potentially lead to higher ruthenium releases, although this does not impact the LRF as we define it.

CHAIR POWERS: I have no understanding of how that can possibly be. If you get high ruthenium releases, you're putting out so damn many fission

products that --

MS. SABRI-GRATIER: Sir, this is true. And I would like just to underline the fact that it's based on the large release frequency as we define it, which is based on cesium, iodine, and tellurium.

MEMBER STETKAR: You don't think we're going to get two or three percent release of cesium and iodine if you're pumping out the within you?

MS. SABRI-GRATIER: It is very possible. We are addressing this issue in open item that we received. We have a strategy to answer them.

MEMBER STETKAR: Have you got any idea how hot that fuel is going to be? I mean, the only way you can release the ruthenium is you're burning the clad. And when cladding burns in air, oh, we're talking about some high temperatures.

MS. SABRI-GRATIER: Absolutely. And, actually, I have a slide later on where I cover a little bit in more detail the way we approached and tried to justify how we treated the ruthenium releases. Maybe we can discuss that in more details when we go to that slide.

MEMBER STETKAR: You released the ruthenium. Not only are you getting all of the

cesium, iodine, and tellurium. You also are getting all of the moly. There may not be too much barium, but you're getting everything else.

Then we'll get your attention. You don't have to be too close either. We'll get your attention.

MEMBER SHACK: Perhaps that is what her slide means. You get how much more --

(Laughter.)

CHAIR POWERS: Yes, but the trouble is this plant is in Maryland. I am in New Mexico, and I am still concerned.

(Laughter.)

MEMBER APOSTOLAKIS: What is the half-life of ruthenium? I don't know what it does?

CHAIR POWERS: Well, if you think on what isotope, there's one that's like a two-year isotope. Ruthenium is the nightmare of all fission products. It is as bad as iodine for short-term prompt fatalities. It is as bad as cesium for long-term fatalities.

MEMBER APOSTOLAKIS: Both?

CHAIR POWERS: Yes. It is the nightmare radionuclide.

MEMBER APOSTOLAKIS: Okay. And that is why it is excluded?

MS. SABRI-GRATIER: It is delayed for later, this cushion maybe. I think maybe two slides after that. I will try to explain the approach at least we have taken.

CHAIR POWERS: The ruthenium for -- I mean, for decades, we blew it off because it's a fairly refractory radionuclide. It doesn't even move.

I mean, you can melt down fuel, and you hardly move any of it. Then, all of a sudden, they realized, in air, that wasn't true. And the Canadians, in fact, did some tests. And they just boiled the ruthenium off because they have a DBA that involves injection with fuel assembly out onto the reactor operating floor. And it burns in containment air. And they get humongous radionuclide releases.

I mean, if you get to that stage in one of these accidents and it's not clear that you fall under shutdown conditions, you would be releasing every radionuclide in the fuel and whatnot.

The reason it's not clear is a lot of these accidents, there's enough boil-off steam

pressure that the air actually can't get into it.

MS. SABRI-GRATIER: And, actually, we do consider that. The most likely scenario where we would have ruthenium release is increased, the scenario would you would have a head off from the RPV and an RPV failure because that's really the condition that will give you enhanced flow of air from containment through the corium. And that would permit, really, the transport of ruthenium oxides to the outside.

I don't know if you would like me to elaborate more on this at this point or --

CHAIR POWERS: You are going to get to it. I just wanted to see if --

MS. SABRI-GRATIER: Okay.

CHAIR POWERS: -- you used a famous circulation document diagram or not.

MS. SABRI-GRATIER: And, actually, I just wanted to point out that it's true you were right what was large before the ruthenium is to large the ruthenium. And that is the only statement that the impact on LRF is trained to make.

For the last point, the open RCS, we treated that in estimation of source term. The way

we did it is we considered that there was no retention in the primary system if it was open. And, basically, everything that was produced inside was outside.

Next slide, please. As I said, we used the simplified methodology for the source term in shutdown. We did have successful MAAP runs for plant operating states CA and CB, where the primary system is closed. However, we could not manage to have successful runs when the primary was open.

And for that, we used different strategies, as I said. For POS D and E, we used the fact that we didn't take credit for retention inside the primary.

We also used insights from some at-power analyses as far as the decontamination factors of the source, for example, or what type of differences we have seen in release categories, whether or not we had molten core-concrete interaction.

As some particularities also that impacted the source term in shutdown, for example, where the preclusion, which is really the absent or unimportance of some phenomena, these being induced hot leg rupture, high-pressure melt ejection

challenges, and direct containment heating, of course, we did have some release categories that were defined at power that were not populated in shutdown. And that's really due to the fact of what the recognition was and how we could loop the sequences together.

Next slide, please. Here we are talking again about the air ingression phenomena at shutdown. So, really, the timing of concern is when we have a vessel head that is off and our PV failure. Therefore, we have a possibility of high convective air flow through the core that has remained in the vessel.

What happens in shutdown condition with having the low decay heat, we have potentially a greater mass of residual fuel in the RPV at the time of the breach, which is different from that power.

What happens exactly, the mechanism, degraded core is exposed to a gas flow, oxygen and nitrogen from outside containment and hydrogen, because the core has already started degradation.

This leads to alteration of the zircaloy oxidation kinetics due to oxidation of zirconium in air, rather than in steam; and formation of oxidic

forms of certain fission products, mainly the ruthenium oxides.

CHAIR POWERS: The oxidation kinetics are different. That's hardly the issue. Air oxidation, I mean, the oxidation of zirconium is limited by the transport of oxygen through the oxide film.

That transport of oxygen doesn't care whether it came from steam or it came from oxygen or CO2 or anything else. They're about the same. What makes the difference is the heat of oxidation is now essentially double.

MS. SABRI-GRATIER: Yes.

CHAIR POWERS: So your heat release is that kills you on these things.

MS. SABRI-GRATIER: Well, as far as the consequences and the type of mitigations, we have in the U.S. EPR for this type of phenomena, what we said based on frequency, really, no impact on LRF, but we have potential for higher ruthenium releases.

We think that the fact of having PARs in the containment and the role they play in the reduction of oxygen concentration somehow lowers the potential for enhanced zirconium oxidation, although that doesn't really resolve completely the problem.

At this time and mainly due to the limitations of using MAAP in shutdown conditions, we haven't investigated this phenomenon in more extensive manner. And, as I said earlier, we do have an open item on this that we are addressing. And hopefully the results and answer, the response for this question will be available to you.

CHAIR POWERS: How much oxygen concentration reduction would you have to get to reduce the zirconium oxidation potential?

MS. SABRI-GRATIER: I will be honest, sir. I don't know as I'm not really expert in this type of phenomenon. But this is something we are investigating right now with some experts in the field and state of the arts and published papers.

CHAIR POWERS: It would be a fantastic amount of reduction.

MS. SABRI-GRATIER: Next slide, please. I wanted to give you a snapshot of what the results for the shutdown level 2 looked like. Basically we have six cutset groups that contribute to more than one percent to the LRF. And, actually, 95 percent of the shutdown LRF come from something like 30,000 cutsets, which really show that there are no major

outliers in the shutdown LRF.

We have the first group. And that is the largest group, release category 802. That will present an RHR LOCA outside of containment. And the contribution is 27 percent also.

The second major group presents failure of containment isolation, either by failing to close the hatch with LOCA or the hatch was open and cannot be closed in plant operating state E with LOCA. This release category is defined as 204 and has contribution of 17 percent or so.

The third major group, LRF presents a very early containment failure due to hydrogen flame acceleration. When we say early, we mean before vessel failure. And that is grouped in RC 303. And the contribution is close to 16 percent.

And, finally, we have a failure to close the hatch again, a containment isolation-type failure with a LOCA. And it contributes about eight percent. And the other groups, as I said, contribute less than one percent.

Next slide, please. This pie chart is to show you -- well, before maybe the pie chart, I will just quickly say something about the main release

category contributors to the shutdown LRF: first, containment isolation, which we can easily understand that because in shutdown with the hatch opened, containment isolation becomes, really, a major contributor to the LRF.

The interfacing system LOCA, that really comes from shutdown CDF, especially in plant operating state E; and, finally, containment rupture due to early hydrogen flame acceleration. And that's only where we have the containment closed.

Maybe we can see something interesting as far as the contribution of the different POS to the LRF. POS CB describes a state with RHR cooling and the water level at mid-LOOP and the RPV head on is a major contributor. This high contribution is really associated to the CDF and comes from the level 1.

We have after that a similar contribution for state CA. And state E is the third highest contributor.

Next slide, please. This was also to show you what are the important contributors to the shutdown LRF. We could see that the LOCA in state CB is the largest contributor, followed by state CA, and in our chart, probably break outside of containment

in state E.

Next slide, please. I wanted to present this because I think is interesting to see how the different release categories contribute to the at-power and the shutdown LRF. I think this provides some insight as far as what is different and what is the benefit of having, really, a shutdown analysis.

We could see that the highest contributor in the shutdown LRF again is the containment isolation. And, again, that is related to the containment hatch. This is followed by early containment rupture.

Note that the early containment rupture, which is grouped in release category 300, was a main contributor and at-power LRF, but, really, most of it was part of the steam line break. And the non-steam line break part of it is equivalent, 28 compared to 21 percent, in shutdown.

Then we go in shutdown to the release category 800, again representing the interfacing system LOCA, which is RHR pipe break outside of containment. And that also comes from shutdown CDF mainly.

And, finally, release category 700, which

represents steam generator tube rupture, that was more important in that power due to the higher pressurization level in the higher decay heat.

Next slide, please. Some important rankings as far as phenomena. The early containment failure due to hydrogen flame acceleration came as the most important phenomenon based on Fussil-Vasili. And containment failure due to in-vessel steam explosion came as an important base on the RAW.

As far as systems, the severe accident heat removal --

CHAIR POWERS: When do you fail by in-vessel steam explosion, when you had explicitly a containment failure there --

MS. SABRI-GRATIER: Well, actually, with the in-vessel steam explosion, the way we model it, you could have several impacts on containment because, for example, you had lower head failure or upper head failure during containment heating or any other phenomenon.

MR. GERLITS: For in-vessel steam explosion, we model the transfer of the energy from the corium into the water in the bottom of the vessel. And then we look at the energy that the

steam could have.

We look at the upper head and lower head failures. If you say the upper head fails, we say it fails containment. We don't take any credit for any intervening structures or anything like that.

CHAIR POWERS: You look just at end failure or do you look at missiles?

MR. GERLITS: We looked -- say that again.

CHAIR POWERS: Do you look at failing the upper head --

MR. GERLITS: Yes.

CHAIR POWERS: -- or do you look at missiles?

MR. GERLITS: We look at the failure. We assume that the upper head becomes a missile.

CHAIR POWERS: So you have to rupture all the bolts. The problem is that that is a lot of bolting. To fail, usually you can fail. The head is a lot easier.

MR. GERLITS: We looked at the phenomena. We looked at energy that could be generated by dropping the core into the water and said, that's a lot of energy. And so we looked at the robustness of

the head. And we --

CHAIR POWERS: Did you take the Hickes-Menzies limit to get that energy or did you do a conversion factor calculation?

MR. GERLITS: There was a -- let's see.

CHAIR POWERS: Let me save you a lot of effort. We presumably will get a chance to talk about this at length in other sections. It sounds to me like you've been horrendously conservative.

MS. SABRI-GRATIER: Actually --

CHAIR POWERS: This is the first time I have seen this upper head failure show up in an analysis in a long time. It brings back fond memories of a previous life.

(Laughter.)

MS. SABRI-GRATIER: And, really, the fact -- I mean, why it is showing up in shutdown, where we have even lowered decay heat and pressure --

CHAIR POWERS: Your triggering efficiencies are a little higher supposedly.

MS. SABRI-GRATIER: Yes, absolutely.

MR. KHATIB-JAHBAR: Let me comment here. This is something I think is important. Mohsen Khatib-Jahbar here. On a conditional basis, the

number is very low.

CHAIR POWERS: Yes.

MR. KHATIB-JAHBAR: Because the overall LRF is 10-8, anything can contribute.

CHAIR POWERS: Yes. In fact, I quickly went through and said we really should not be leaving out the earthquakes because the probability has gotten so low we're down in the noise. Yes, you're absolutely right. And I'm probably taking already more time. It just brings back such memories.

I think you have been very, very conservative. Let's go on.

MS. SABRI-GRATIER: Actually, the RAW number shows as high because, really, the probability of having this particular basic event is low. It's on the order of the 10-6.

As far as systems, the important systems are severe accident heat removal, of course, and the RHR flow diversion isolation.

As far as operator actions, we found that operator actions from the level 1 are still very important for the LRF, but for a specific level 2 operator action, the hatch closure, with and without power, was extremely important.

Next slide.

CHAIR POWERS: Again on a conditional basis, it was important?

MS. SABRI-GRATIER: Yes. For a conclusion, now second-guessing, satisfy the Commission safety goal, I think we have covered that. So the shutdown large release frequency for the U.S. EPR is ten percent of the CDF. Again, a reminder, CDF was 5.8E-8. Shutdown LRF is 5.7E-9.

Maybe the most important information would be the CCFP for the total at power and shutdown. It's .05. And that satisfies the goals, whatever the Commission is -- on top of that, having a specific shutdown level 2 provided more insights on accident sequences during shutdown conditions.

And I think that's all. If you have any questions?

CHAIR POWERS: Are there any additional questions here? I'm really struggling with how I am going to write this letter. It's going to say no undue risk to the public unless we have a big earthquake, and don't believe their shutdown numbers because they are way too high.

MEMBER APOSTOLAKIS: Yes. I mean, if you

go back, it seems to me, one slide back, the number 5.7, 10-9, that means that if we had built a reactor when the Earth's crust started forming --

CHAIR POWERS: No, George. It is when life started. It's not when --

MEMBER APOSTOLAKIS: No, no. It's 10-9 year.

CHAIR POWERS: That's only half a billion years.

MEMBER APOSTOLAKIS: In the reactor, we're continuously in the shutdown state from the beginning. How many core damage releases would you allow?

CHAIR POWERS: I'll remind you of a reactor we had in Africa and the reason that we have giraffes.

(Laughter.)

CHAIR POWERS: I propose we take about a ten-minute break and then we --

MR. TESFAYE: Staff's presentation.

CHAIR POWERS: Okay. We are going to take a ten-minute break real quickly and then proceed on.

(Whereupon, the foregoing matter went off

the record at 3:09 p.m. and went back on the record at 3:19 p.m.)

CHAIR POWERS: Okay.

6. U.S. EPR DC SER WITH OPEN ITEMS FOR CHAPTER 19, PRA AND SEVERE ACCIDENT EVALUATION (CONTINUED)

MR. TESFAYE: What we are going to try to do is in relation to what we were doing this morning. Then we're going to finish up the presentation that Ed was speaking about before, about three slides. And Ed will give his level 2 presentation. He has a plan to finish up his presentation in an hour.

MR. FULLER: It is not to finish. It is to prioritize to get the most important points across within an hour, recognizing that we cannot possibly finish at all in one hour.

MR. TESFAYE: Okay.

MR. FULLER: Anyway, I am Ed Fuller. I am a senior reliability and risk analyst in the PRA Branch of NRO. I have been in this position for three and a half years. I came from -- in this position, I review the level 2 PRA submittals and severe accident evaluation submittals for all of the design certifications.

And obviously I can't do all of that

myself. So I have a very reliable contractor, ERI, who works with me to review the FSAR, help prepare RAI questions, produce a technical evaluation report, or review the RAI responses along with me, and works with me to evaluate possible follow-up questions. And, without ERI, I would not be able to do this job.

My background is that prior to coming to the NRC, I spent many years at the Electric Power Research Institute in two separate stints doing primarily severe accident evaluations or preparations of tools to do severe accident analyses and in that context did a lot of level 2 PRA activities as well.

I was responsible for the initial drawing the original specifications up for the MAAP code when I was in the IDCOR program back in the early 1980s. And I was responsible for continuing the development of MAAP after IDCOR was over at EPRI.

After I left EPRI the first time, I used the MAAP code for quite a few applications as a consultant. What else?

I have a Ph.D. in nuclear engineering, which I got in the middle of the last century, it seems.

(Laughter.)

MR. FULLER: Nineteen sixty-nine from the University of Arizona. And previous to becoming a light water reactor severe accident person, I was a fast breeder severe accident person. So those are my qualifications.

What we are going to do here today is because we don't have enough time to go through all of the material I prepared for the level 2 PRA, not to mention severe accidents, I am going to finish up our discussions on the level 1 PRA to go over what I did and found in the success criteria evaluation.

And then from there I want to prioritize and discuss explicitly the three open item areas that we have in our level 2 PRA, both at power and during shutdown events and then after that go back and hit one or two highlights of things that you're going to find really important that we don't have any open items on anymore. Okay?

So with the success criteria, what we found is that AREVA used a very what I would call prudent approach to analyzing success criteria. They chose a number of scenarios. And they're listed on slide 55 here that they used MAAP4.0.7 to use and analyze these criteria, determine what the criteria

were, actually.

Basically, they decided that core damage for this purpose is defined as uncovering the core. And they assumed core damage if the peak cladding temperature exceeded 2,200 degrees Fahrenheit. And, in addition, for ATWS scenarios, they assumed core damage if the RCS pressure exceeded 130 percent of the design pressure.

The found during the course of doing these calculations that sometimes they got into nebulous regions. They determined that they could assure success pretty much if the peak cladding temperature was less than 1,400 degrees Fahrenheit before it stopped increasing. And they were assuming that if they exceeded 1,800 degrees Fahrenheit, they had better assume core damage and no success in this case.

There is this gray region between 1,400 degrees and 1,800 degrees in the MAAP calculations, where they realized that MAAP has quite a few simple models that they concluded couldn't be relied upon to that degree of certainty in that range.

So what they did was they ran some benchmark calculations with RELAP for scenarios that

fell into that range. And based on that, they came to an overall conclusion that mostly the MAAP results agreed with RELAP. And for those cases that they didn't, they said they developed a set of acceptance criteria.

CHAIR POWERS: Let me ask you a couple of questions here.

MR. FULLER: Yes?

CHAIR POWERS: Exceeding peak clad temperatures, be it 1,800 or 2,200 degrees, that was included in appendix K for the issue of will the core remain coolable.

And that set of criteria, having a coolable core is a little more extensive than just a peak clad temperature. It is, in fact, a set of criteria to assure that the clad doesn't become embrittled so that when you restore cooling, you don't shatter the core into 1,000 little pieces that are no longer coolable.

That aspect of embrittling the clad doesn't show up here.

MR. FULLER: No, it doesn't. This is the PRA success criteria.

CHAIR POWERS: Yes. And what I'm asking

is suppose, just as a hypothetical, I come up, sit at 1,600 for 7 hours, and then I restore cooling. Am I going to shatter the core?

MR. FULLER: I don't know, but --

CHAIR POWERS: Their criteria would say no. I would be just --

MR. FULLER: Well, that would depend, then, what RELAP would say because when you are at 1,600, their acceptance criteria say you've got to do something else besides MAAP here. Okay?

By the way, before I go on --

MEMBER SHACK: I suspect his RELAP calculation just looks at peak clad temperature, too.

MR. FULLER: I expect so, but I don't know.

When we did our audit, I came across this report that talked about their success criteria evaluation. It was a pretty detailed report. It looked pretty good. But those details don't appear in the FSAR.

So I wrote an RAI question. And write this down because if you're interested, you might want to look this up. I forgot to put it on these slides here. RAI 133, question 19-246. The response

to that question will provide all of the details.

So if you look at their acceptance criteria, they do cover the gamut in terms of at-power events, low-power, and shutdown events, ATWS. And they say it's a 24-hour mission time. So you said 16 hours, I think.

CHAIR POWERS: I picked a number.

MR. FULLER: So my guess is if they saw a RELAP saying that you're at 1,600 degrees Fahrenheit, they're probably going to declare failure. That's my guess.

Anyway, slide 57 lists the success criteria. I'm not going to go over them in the interest of time.

MEMBER STETKAR: Before we get off this slide, I'm going to back up because it is success criteria-related. I've got a little bit confused because they said that they did run MAAP analyses to determine success criteria. And I'm certainly not a MAAP expert.

I seem to have read somewhere that they concluded that, for example, two emergency feedwater trains are required if steam is released through the main steam safety valves but only one train is

required if you're relieving steam actively through the relief valves.

I have read that. From a thermal hydraulics perspective, I am not well-founded to know whether or not that makes sense.

On the other hand, it seems that the success criteria that they applied uniformly in their model was one of four emergency feedwater trains, regardless of the initiating event, regardless of whether it was active steam relief or steam relief through the safety valves.

Did you look at that aspect of consistency of the success criteria or did someone else or am I misinterpreting something?

MR. FULLER: Well, let's put it this way. I looked at their RAI response. And they have a table in this RAI response. The table goes on for several pages. It gives you the success criteria for each of these scenarios that are listed on page 55 here.

I didn't actually sit down and evaluate each one and decide for myself if it was success or failure.

MS. CLARK: This is Theresa Clark from

the staff. I think it might be more appropriate for AREVA to say exactly how they modeled one particular scenario or the other.

My understanding is that that information from the calculations, -- I can recall that one the same as you do -- got transferred into like the flag events and stuff that was in the model.

MEMBER STETKAR: I only know, you know, unfortunately, I only know what I can read on pieces of paper. And the good news is that for every event tree, there is a table for each type event that lists the success criteria.

And I guarantee you that for small LOCA events, which, for example, would require active depressurization through the MSRVs and for general transient events, where success is modeled with just steam release through the safety valves, it's one of four EFW pumps.

That is what is written in a table. What is actually wired into some PRA model I have no idea.

MS. CLARK: Maybe they will be able to speak on that.

MS. DIMITRIJEVIC: This is true. There is a discrepancy with what is written in one place.

Then there must be some typo because every success criterion which was determined by MAAP was transferred to event trees.

MEMBER STETKAR: Well, you know, the problem is I think you did a -- I wish George was here because George loves to discuss modeling uncertainty. I was honestly very, very impressed with your discussion of your treatment of modeling uncertainty. I think you get just tremendous marks for that.

That being said, to kind of support this difference in success criteria I notice that the weights that are applied in those modeling uncertainties indeed apply higher weights to different numbers of --

MS. DIMITRIJEVIC: Yes.

MEMBER STETKAR: -- EFW trains, given different types of initiating events, which tends to support that MAAP conclusion.

MS. DIMITRIJEVIC: Yes.

MEMBER STETKAR: But I don't see that in the tabulated success criteria, at least --

MS. DIMITRIJEVIC: In the event tree in that --

MEMBER STETKAR: You know, 19A appendix --

MS. DIMITRIJEVIC: Right. We will check --

MEMBER STETKAR: I don't see that. So I don't know what was actually used. I mean, it sounds like a really good story, but if it wasn't really used in practice --

MS. DIMITRIJEVIC: No, no, no. Absolutely. That would be completely unintentional.

MEMBER STETKAR: Okay.

MS. DIMITRIJEVIC: So we will check this for you.

MEMBER STETKAR: The reason I saved it for Ed was I looked ahead. And you're the only person in this whole big discussion that said anything about success criteria. So that's why I waited until now, rather than yesterday.

MR. FULLER: That's fine. I'm sure that you will --

MEMBER STETKAR: You said MAAP.

MR. FULLER: If you look at that RAI response, that will lead you down the path of finding out what you want to know about all of the

allocations of equipment for the various scenarios.

MEMBER STETKAR: And that is not just core damage. I mean, it is success criteria for injection, for feed, for steam relief. All of that is in there.

MR. FULLER: Their criteria are on slide 57 for each of these cases.

MEMBER STETKAR: Yes.

MR. FULLER: Granted, they did not look at all. In their benchmarking, they did not look at all of these. And I might point out in anticipation of a discussion I am hoping to have later before we leave the steam line break inside containment, that one is not listed on the table.

And, as you probably are aware from what you heard a while ago, they assumed for this particular scenario where they got containment failure early, that they not only failed the containment, but they returned to criticality and get themselves into a core damage situation very fast.

We questioned that. And I'll explain later our thought process and how that got resolved. Their slides are here. But I just want to point out that that particular scenario is not in the table for

success criteria.

Anyway, notwithstanding all of that, we believe that their approach is prudent because they established ranges where they realized that the tool that they were using was limited and cautioned their COL applicants or whoever uses this later to stick to the acceptance criteria.

Okay. I want to go to slide 59 because I want to talk about the approach that we took to the level 2 PRA and the severe accident evaluation review.

It's pretty much what Hanh mentioned earlier. I should add, though, that in this case for the severe accident evaluation, we were able to get a head start because they sent us a topical report before they ever submitted an application on how they were evaluating the various severe accident phenomena in the context of the EPR design. And they discussed the code patches they were going to be using to do the initiating event evaluation and also the level 2 accident progression.

So they used MAAP4.07, as you already know. They used WALTER for doing some heat transfer calculations. They used MELTSPREAD to determine

where the melt would go after vessel failure because, as you probably are aware, even though nobody has discussed it yet, they have a core melt stabilization system, which is complicated. And they have a severe accident heat removal system that works in conjunction with it.

So we had to review that. And basically I wrote an SER on it. It's one of the first things I did after I got here from EPRI, was did that review.

Then I and my contractors reviewed the FSAR and identified where additional information was required. That was step number one.

And you heard about the audits that we did. What you may not know is that when we do these audits, we are not allowed to copy documents or obtain electronic files. All we can do there is make notes.

MEMBER STETKAR: This is probably a little bit less important, but did you have access to the actual PRA models? I mean, could you look at the models on the computer? And that is more of a level 2 --

MR. FULLER: Level 1 I think --

MEMBER STETKAR: Well, it's level 1,

level 2.

MR. PHAN: The answer is no. We don't have the opportunity to look at the electronic version of the PRA.

MEMBER STETKAR: Okay.

MR. FULLER: In level 2 space, we don't do that.

MEMBER STETKAR: I was going to say it's not the phenomenological things that you're talking about, but it just --

MR. FULLER: And then, as I alluded to earlier, we prepared RAI questions. We had to get smart about it. And unless we had some specific questions we knew could be answered quickly and they didn't need follow-up, we carefully phrased the questions in such a way as to get as much information on the docket as we need it.

And that way we would have information in place to carry out the thorough review. In other words, we couldn't get the whole PRA, but we could -- if we were smart in preparing the questions, we could get the answers we wanted.

And then after we got those, some of which went on to 100 pages or more, we prepared

follow-up questions to provide the clarifications and reviewed those.

ERI prepared a technical evaluation report to help me write my SER. And in preparing the technical evaluation report, we considered the responses to these questions.

And from there, we went forward and got to the point where we are today with the SER with open items.

MS. SLOAN: Dr. Powers?

CHAIR POWERS: Yes, ma'am?

MS. SLOAN: Can I just interject a comment? I guess I would like to add that we were not asked to provide access to those files. But should we get asked, all of our files internally are available for staff inspection at any time.

CHAIR POWERS: Well, thank you.

MS. SLOAN: It's an open book.

CHAIR POWERS: Thank you very much. I'm sure the staff is delighted to hear that. What I see, though, is that the rules that the Commission has chosen to adopt here are providing a handicap and that we need to alert this Commission of this handicap here and to appoint them with the difficulty

they have, especially if they were to encounter an applicant not quite as generous as Ms. Sloan here seems to be willing to be.

(Laughter.)

MS. SLOAN: I would say, Dr. Powers, that is the case for any analysis that we perform. Chapter 15 is the same way. I mean, we -- and, actually, if you look at the PRA document, we submitted this binder to NRC, which is bigger than our chapter 15 notebook. And, just like on chapter 15 --

CHAIR POWERS: And you think they thanked you for that?

MS. SLOAN: Just like on chapter 15, the books are always open. The staff on chapter 15 has come and audited calc files and looked at S-RELAP5 calculations. I would just say that what we are doing for PRA is no different fundamentally than what the NRC has accepted as practice in the past for the deterministic analysis.

CHAIR POWERS: That's good, and that's helpful. I think we have something the Commission may not be aware of because many of them are not experienced in how to look at things. And it's not

you. It's the hypothetical applicant that may be less generous that is causing you pause.

Let's charge ahead.

MR. FULLER: Okay. I am going to skip slides 60 and 61. I think we beat that to death when Dave was talking on the containment event trees.

One of the important components of preparing their event trees, though, are these phenomenological evaluations. We took a very careful look at these phenomenological evaluations, which are listed on page 62 because they took probabilistic approaches to evaluating these phenomena for the purposes of doing their level 2 PRA.

We asked questions, I guess, on every single one of them. And we had follow-ups along the way. At this juncture, though, there is only one open item remaining. And that is related to the fuel-coolant interactions.

So I want to discuss that now. And, time permitting, I want to come back to the induced rupture of the reactor system boundary and, if time really permits, talk about the hydrogen deflagration flame acceleration and DDT transition.

So let's now go to slide 67. Regarding

in-vessel steam explosions, we didn't have any real problems with that. And so I don't even think we asked any questions because we didn't think that that was a likely serious issue.

Regarding ex-vessel steam explosions, though, we have some interesting concerns that were not something we went in with a -- we didn't have any preconceptions about it. We're a little bit surprised.

Basically the chances of you having a situation where you can possibly have a steam explosion are pretty remote because their design philosophy is such that they don't want water in their cavity.

There are a few scenarios which will get it there. And so there is some probability that there will be a water pool and when you have vessel breach.

They evaluated the failure probability of containment in this case by comparing distribution of impulse loads to a distribution of reactor cavity pit structure strengths. And they used the Monte Carlo simulation to look at the various possibilities for these loads. And they used a correlation coming out

of that relating energy release to peak overpressure duration. And they calculated very low-impulse loads and low conditional probabilities of containment failure as a result.

We questioned that approach and wondered why they did it because. There are some analytical approaches in existence based on previous NRC-sponsored analyses and some of our other applicants have actually used codes like TEXAS to do their analyses.

So we requested technical justification for the low values. And we requested a mechanistic analysis to support the uncertainty distributions. In response, they provided an analysis. And they revised their estimate upward a little bit for pit failure to 5 times 10-3.

We requested further information on the impacts of uncertainties associated with estimations of premixing and explosion as well as the consequences of these steam explosions.

There is another issue, which we will just probably -- I'm sure we won't discuss today because it's discussed in our severe accident evaluation review. And that is the possibility of

late steam explosions because in our confirmatory assessment using the MELCOR code that was done under the sponsorship of the Office of Research, also by ERI, by the way -- they did the work for Office of Research -- it was shown that in some cases, MELCOR calculates that there can be significant delays in getting all of the core debris out of vessel before vessel failure.

In such a manner as by the time a lot of it could come out, you could have water already flooded back in through from the spreading room through the channel connecting the spreading room with the cavity back to the cavity. And so we are asking questions about that, too, because the implications are you might have a late steam explosion.

We don't know what the loads would be or anything, but that is an open item in severe accident space which we're not going to discuss today because of interest of time.

CHAIR POWERS: Have you had ERI do TEXAS calculations on any of these scenarios?

MR. FULLER: Yes, in fact, they have done these calculations. And if you want to know some

details, Dr. Khatib-Jahbar can provide them right now if you want.

CHAIR POWERS: It might be interesting if you could give us a thumbnail sketch.

MR. KHATIB-JAHBAR: Of what we have done?

CHAIR POWERS: Yes.

MR. KHATIB-JAHBAR: We have done a number of things. First, we looked at the melt stabilization system, which is a cavity and the potential for the plug failure, which may happen prematurely. That relates to the overall growth stabilization system.

Then we also looked at a number of parametric calculations using TEXAS to see what is the range of explosive impulses we could get inside the cavity. And we varied the calculations over the difference in types of pores, whether they're metallic, they're oxidic over the range of temperatures and water conditions. And we found that what you will get is not very different from what you have seen for other reactors. And you don't expect to see much differences with other reactors.

However, because of the close proximity of the explosion to the cavity, the impulses are, of

course, transmitted directly to the cavity wall. And that's a concern because you have a protective layer of zirconium in this cavity. And that is what distinguishes this reactor from other reactor types which were previously licensed. So that's why we looked at this more carefully.

There are several lingering questions on the stability of the zirconium oxide, zirconium, the design for the cavity, and then there are still a number of open issues there that we are awaiting responses.

CHAIR POWERS: Thank you.

MR. FULLER: Okay. So this is an open item. It's RAI 349, question 19-334. And we are expecting responses to that. I don't know if that on is the end of March, the end of April, or the end of May. We had in our latest set of questions with these open items, those are the dates that AREVA has promised responses by.

Let's see. The other open item has to do with source term definition, page 70. They, as you heard, used MAAP to compute the source terms for 20-some odd release categories. And each source term that they used was associated with a single

representative sequence that they simulated with MAAP4.07.

They used these source terms, as far as I can judge, principally -- they may have used it for equipment survivability. I'm not sure. But they definitely used them to prepare their inputs for their MAACS2 calculations to support the environmental report.

One of those release categories, which is the second largest in their scheme, as they showed earlier, release category 702 is associated with scenarios involving a single steam generator tube rupture. It could be an induced tube rupture or a tube rupture that initiates the accident, either way, but it's one tube.

We were concerned that they didn't address multiple tube failures. So we asked the question. And then they answered it in response to RAI 133, question 19-233.

Meanwhile, we had done some confirmatory MELCOR calculations. And those showed results on the order of double what MAAP was getting for the first 24 hours of the accident.

Moreover, we thought that the results

should be going on for longer than 24 hours for accident management purposes and to look at MAACS. And so we asked them in a follow-up question, RAI 349, question 335, to revise their analyses to reflect the potential impact of continued heat-up of the steam generator tubes because we are surmising that the differences might be due to the way revaporization is being treated in the tube codes.

We're not absolutely sure of that because MAAP has had revaporization models in from day one essentially. But, nevertheless, we thought maybe we needed to see those results. And, furthermore, we wanted to have them extend those results this time to 48 hours.

We're not interested in them having many, many tube failures. There is a practical matter progression from one to two to five tubes. Maybe ten is the most one could expect, I think. So we told them to basically limit their study here so that they reflect the reality of how degraded tubes would behave in a severe accident. And so that is another open item, the results of which are going to be provided in the next few months.

Okay. The last open item pertains to

that subject near and dear to Dana's heart, the issue of low-power shutdown and the ruthenium release. It's page 73.

So we are concerned as well. And we requested that they verify that their approach is bounding given that during shutdown conditions with the reactor vessel open you could get air intrusion and then enhanced oxidation that could result in ruthenium release transforming into more volatile valence states.

Our concern goes beyond the issue of just what the contributions of large release frequency are. As we indicated before, probably for those scenarios, they already calculated that it was in excess of two or three percent volatile fission product release. And, according to the definition, they already met it.

However, we have issues related to the SAMDA, severe accident mitigation design alternatives, because, in the first place, the accident release categories that they now have put into their SAMDA evaluation did not include the shutdown scenarios. So anything having to do with ruthenium wasn't, at least that way of getting

ruthenium, was not being brought to the fore.

So we requested them to provide additional information regarding the air ingression and enhanced ruthenium release and do some sensitivity calculations such that they could determine the impacts on their SAMDA evaluation.

I don't know what their response is going to entail. I wouldn't be surprised if they had to do some MAACS calculations as part of responding to that. We will see. And, basically, that is the third open item related to the level 2 PRA.

Any more questions on that?

CHAIR POWERS: Do members have any questions on these open items? This is all stay tuned. We will find out when it happens or be edified in the process and things like that. I don't know exactly when we're going to do that but presumably sometime before July of 2011.

MR. FULLER: Okay. Then let me go on to a couple of other issues that we found really important. Let me find the right page here. Okay. Page 63, induced rupture of the RCS pressure boundary.

Not everything on these five pages is

open -- four pages, yes, four pages. But let's go. This phenomenological evaluation investigated induced ruptures of the hot leg nozzle, surge line nozzle, or steam generator tubes during high-pressure severe accidents.

We asked them questions along the way here pertaining to how one might do this kind of an evaluation based on our experience developing methodology in doing them. And we asked them to make sure that they had depressurized secondary sides, make sure they had some degree of degradation in the tubes. And we had them run parametric studies on that along the way to get an idea of if there were any circumstances where the tubes would fail first before the hot leg nozzle or --

CHAIR POWERS: In most of these, most of the time when we debate these issues, hot leg nozzle, surge line nozzle, and steam generator tube failures, we're always looking at sequences with intact loop seals.

MR. FULLER: I'm sorry?

CHAIR POWERS: Most of the time when we debate what --

MR. FULLER: Yes. Okay. They were

looking at seal LOCA cases, too, and the small LOCA cases. And in some of those circumstances, they end up with unidirectional steam flow, in which case they're going to fail tubes in great --

CHAIR POWERS: The tubes die.

MR. FULLER: -- numbers, whether they're damaged or not.

CHAIR POWERS: Yes.

MR. FULLER: So they looked at that. And they have a probability associated with that kind of circumstance.

CHAIR POWERS: They must have a model for LOOP seal clearing?

MR. FULLER: You know, I didn't ask them that question. MAAP does not have a model for LOOP seal clearing. You have to assume it. So I presume they didn't unless they did some confirmatory RELAP calcs.

MEMBER STETKAR: Ed, did you look backwards to check how carefully the level 1 models evaluate conditions of depressurized and dry secondary side? In other words, you know, there --

MR. FULLER: No.

MEMBER STETKAR: -- there are success

criteria in the level 1 models that require feedwater and steam relief, let's say, from one of four steam generators.

MR. FULLER: No.

MEMBER STETKAR: Those models don't necessarily know what is going on in any of the remaining three steam generators. They might not have had feedwater supplied to them. They might be depressurized because of valves that opened and stuck open.

MR. FULLER: No, we didn't. Let me make a note of that.

MEMBER STETKAR: That's why I brought it up. It's on the record now.

(Laughter.)

MEMBER STETKAR: It's an area that we have run into. I've become more sensitive to it, you know, since all of our discussions about induced steam generator tube rupture. And it's an area where most level 1 PRA modelers are not sensitive to the fact that, although you may or may not -- let's say you lose secondary heat removal because you had failure of all four feedwater trains.

Okay. You know you're dry, but nobody

looks to see whether or not you've got a stuck-open relief valve because they don't care. You're going to core damage. Nobody ever checks to see --

MR. FULLER: There's also --

MEMBER STETKAR: -- when you're depressurized on that secondary side because it's not a level 1 core damage issue. It's irrelevant.

MR. FULLER: And there's also failure of the valves to recede under repeated cycling.

MEMBER STETKAR: Exactly. It gets into, do you model the turbine bypass valves or not and that type of thing.

MR. FULLER: Yes.

MEMBER STETKAR: So I was just curious whether --

MR. FULLER: We didn't explicitly ask those questions, no.

MEMBER STETKAR: It's one of these things where a typical level 1 PRA doesn't pay any attention to that because they don't need to from strictly looking at core damage. And then they feed sequences to level 2 that say, well, we're at high pressure, we're at low pressure, or, for some reason, this particular sequence might have a stuck-open secondary

relief valve because in this particular plant, we challenged it to respond to a small LOCA or something like that.

MR. FULLER: Yes. Okay. I want to formulate something on that.

CHAIR POWERS: These are all 690 tubes?

MR. FULLER: Yes.

CHAIR POWERS: Yes?

MR. FULLER: Yes, absolutely. Okay.

CHAIR POWERS: They might have been smart and used the alloy-800.

MR. FULLER: Anyway, when they did all of their activities, they determined that it was most likely that the hot leg nozzle would rupture first. But when cases where steam -- at least when steam generator was fully depressurized, they predicted for those scenarios where you've got unidirectional flow, the probability was pretty high for sequences involving LOOP seal clearing following seal failure or certain small LOCAs.

But for transients, they had a very small number. Of course, that small number depends on the degree of damage of the tubes. And we asked them questions about, did you consider, for example,

whether or not you had foreign object wear and what that might do to increase the likelihood because that's the most likely way you're going to get the circumstance because stress corrosion cracking, as Bill Shack knows very well, is almost a non-issue with these alloy-690 tubes.

MEMBER SHACK: One hopes.

MR. FULLER: So far. Okay.

CHAIR POWERS: I believe that Dr. Shack will tell you that eventually they are going to crack. What he won't tell you is whether they will crack now or at the end of 80 years of life.

(Laughter.)

CHAIR POWERS: Eight hunderd, on the other hand --

MR. FULLER: Now I will turn to another issue. And if you want to hear about this, it's part and parcel of this induced rupture of the pressure boundary. We asked them some questions. And they did an analysis on the impact of instrument tube failures.

As many of you know, about two years ago, Bob Henry realized doing a great piece of detective work looking at the Three Mile Island charts that

there were fission products and hydrogen in that containment early on, before the B loop pump restart.

How could that be? Well, he surmised that it was instrument tube failures. They got melted out. And the air gaps in the tubes were part of the containment pressure boundary. So if you failed an instrument tube, you violated the RCS boundary, essentially, at least for a while.

So in response to a question, they ran some analysis where they looked at a single tube failure. It didn't show much effect. Then we asked them to do multiple tube failures, failing all of the air ball measuring system probes. Again they didn't get much of an effect.

And so we ran some confirmatory calculations with MELCOR and found those are very relatively small gap sizes relative to a Westinghouse plant or for those who might be associated with the review of the APWR, a Mitsubishi plant.

So basically they showed that natural circulation didn't get destroyed. And there wasn't an awful lot of additional hydrogen coming out in the instrument table region, you know, wherever measurements are.

We were concerned about possible DDT from that. And it looks like they were able to show us pretty well that there was not an issue here. So we closed that RAI.

The last thing I want to talk about is the steam line break inside containment because -- and this is page 69 -- as you saw, the release category associated with that initiating event dominated the large release frequency by a lot.

And I had mentioned a few minutes ago it was due to their assumption that if they got containment failure from this, that led to core damage, led to recriticality, and all hell would break loose. And it would be a very early failure.

So we asked them questions about that. And we basically asked them to do a deterministic analysis to justify those assumptions. And what they did is they did RELAP calculations to determine whether or not they were going to become recritical. They did MAAP calculations to see what the containment challenge was from this.

The answers to the questions were they weren't go to go recritical and that you wouldn't get a containment failure from this. That's why we're a

little bit surprised to see these pie pieces still showing this thing with such a high value.

So in our SER, we don't call it an open item anymore. We call it a confirmatory item because they haven't changed their FSAR yet to reflect this new information.

MEMBER STETKAR: It is a lot more realistic one.

MR. FULLER: Now, granted, I guess you're supposed to give us another FSAR pretty soon, right?

MR. TESFAYE: This is Getachew Tesfaye again. What we call confirmatory is what will provide us with a marked-up FSAR, but it has not been officially submitted, and an officially revised FSAR.

MR. FULLER: We don't even have the mark-up on this one yet.

MR. TESFAYE: Then it's an open item, not a confirmatory item.

MR. FULLER: Oh, okay. So it is an open item.

CHAIR POWERS: Do we know when this much-flaunted revision 2 is going to become available?

MR. TESFAYE: Last we heard it was May.

CHAIR POWERS: Will you transmit it to us simultaneously?

MS. TESFAYE: Absolutely, yes.

CHAIR POWERS: Okay. It's just timing and --

MS. SLOAN: Rev 2 submittal is targeted in June of this year.

CHAIR POWERS: Okay. So it is imminent on my time schedule. It's just around the corner. Okay. Good. Thank you very much.

MEMBER SHACK: Ed, I just had a question. On those induced tube failures, were they actually taking credit for anything if they didn't depressurize or did they just let things go to failure?

MR. FULLER: They weren't taking credit for a hot leg failing later if that is what you are asking.

MEMBER SHACK: Yes. Okay. I mean, so, then, what is the concern? I mean, they weren't being unconservative, were they?

MR. FULLER: No. That is not even an open item.

MEMBER SHACK: Okay.

MR. FULLER: Okay? There is an open item associated with multiple tube failures for source term which we just talked about. But with this piece, since we have a few minutes, I guess, whenever we talk about the severe accident evaluation, there is an interesting -- there is an open item that we have reviewing their severe accident management document, the OSSA that you heard about briefly earlier, very interesting document.

We're still reviewing it. And there were a couple of items that -- what we're doing, we're formulating follow-up questions now as part of our review. There is one follow-up item. There is one follow-up item related to -- well, there are two follow-up items related to depressurizing the primary side, which is their entrance.

When they decide they're going to enter the OSSA, that's when they decide, when they have 1,200 degrees Fahrenheit core exit temperature, 650 C.

And one of the questions we are going to ask -- and we have mentioned this in our SER with open items. We are going to ask them about whether or not you can give us some more information on the

relative time delay between when the core exit temperature reaches 1,200 and when they actually open up the valves.

We had an RAI. We asked them on that. They gave us a response. And they gave us some time ranges. It looks like up to 20 minutes, they would have up to 20 minutes, to do it before they could get into tube rupture land.

But we're going to be asking about the HRA associated with that. From what I heard this morning, it looks like a lot of what is in the details behind the OSSA is HRA-related stuff.

The other piece has to do with some information that we discovered at the CSARP meeting in October. There were some experiments done in Karlsruhe for the EPR configuration ECH experiment.

What these experiments showed was that, even if you have a relatively low delta P at vessel failure, a couple of hundred psi. There is enough force there that you can get an awful lot of core debris into pump rooms and steam generator compartments. So we plan to be asking them a question on how they're going to be dealing with that in accident management space.

So there is a symbiosis between the level 2 PRA review and the severe accident review basically.

CHAIR POWERS: Well, thank you very much. I have to say this was outstanding. I enjoyed every minute of it. I thank you all for your forbearance on our choppy presentation, but I think you saw that the Subcommittee is incredibly interested in everything that you're doing and ascribes a great deal of importance to it. And so, understandably, we keep wanting to plow into details and understand more about what you're doing and how you're doing things because, quite frankly, both the applicant and the reviewer are doing ground-breaking state-of-the-art work here and should be justifiably proud of what they are doing. I have thoroughly enjoyed and learned lots here. Thank you for making me smart.

MR. PHAN: On behalf of the staff technical reviewers, the staff would like to thank the ACRS Committee for the opportunity so we can share the findings from the staff reviews and also the extremely valuable information that the staff learned from this meeting. So thank you very much.

MS. CLARK: If I could have 30 seconds to

clear one thing up on the record? We were talking previously about the emergency feedwater success criteria. That sounded suspiciously familiar, but I didn't have my computer on.

I can't talk about what's in the FSAR because I don't have that here, but there are two questions that I will point you to where it was very clearly documented what they actually used in the model.

RAI 7, question 19-60 relates to the criteria for fast cool-down. And RAI 53, question 19-202 relates to the overall criteria for emergency feedwater in various scenarios.

MEMBER STETKAR: Two-o-two?

MS. CLARK: Two-o-two.

MEMBER STETKAR: Thank you. I think I remember reading those, which is why I flagged it myself.

MS. CLARK: That's all that I had. That's it. Thank you.

MEMBER STETKAR: Thanks.

CHAIR POWERS: And with that, I think I will bring this session to a close. I think we will see AREVA and the staff again on March 3rd. Is that

correct?

MR. TESFAYE: March 3rd, yes.

CHAIR POWERS: Well, we'll have some more fun.

MR. FULLER: Does that mean the rest of this presentation, then, or is that something else?

CHAIR POWERS: I think that is scheduled to be something else.

MR. TESFAYE: That is chapter 4 and chapter 5.

CHAIR POWERS: I think we're going to conduct a negotiation to decide when we're going to continue on on this or to stop and how we ought to go about continuing on on this sort of stuff. It should be interesting.

Good. We are adjourned.

(Whereupon, the foregoing matter was concluded at 4:16 p.m.)

Chapter 17 Quality Assurance
17.4 – Reliability Assurance Program

Design Stage (Stage 1)	Design Certification Phase (Phase 1)	Design Certification FSAR	Describes RAP Scope, Goals, Objectives
			Describes Program Implementation (explains stages and phases)
			Identifies risk significant SSCs (from PRA)
			Identifies risk significant systems from Expert Panel (System level list)
			Describes RAP Organization (Phase 1)
			COL Item to provide Site Specific List (additional items)
			COL Item to describe quality controls applied and how RAP is implemented into procurement, fabrication, construction, and test specifications for the SSCs within the scope of the RAP
			Includes ITAAC for Stage 1 Program Implementation
	Site Specific Phase (Phase 2)	COL Applicant FSAR	Adds Site Specific List
			Describes RAP Organization (Phase 2 and Stage 2)
			Describes quality controls applied and how RAP is implemented into procurement, fabrication, construction, and test specifications for the SSCs within the scope of the RAP
			Describes Operating Stage RAP (Stage 2)
		COL Licensee Detailed Design and Construction	Implement Design Stage Phase 2 RAP described in COL FSAR
			Plant-Specific PRA insights
			ITAAC Closure
Operating Stage (Stage 2)		COL Licensee	Implement Operating Stage RAP described in COL FSAR

United States Nuclear Regulatory Commission

Protecting People and the Environment

Presentation to the ACRS Subcommittee

AREVA U.S. EPR Design Certification Application Review

Safety Evaluation Report with Open Items

Chapter 19: PROBABILISTIC RISK ASSESSMENT & SEVERE ACCIDENT EVALUATION

February 18-19, 2010

Staff Review Team

- **Technical Staff**
  - **Hanh Phan** (Lead), Senior Reliability & Risk Engineer
    PRA and Severe Accidents Branch
  - **Edward Fuller,** Senior Reliability & Risk Engineer
    PRA and Severe Accidents Branch
  - **Theresa Clark,** Technical Assistant
    Division of Safety Systems and Risk Assessment
  - **Jim Xu,** Senior Structural Engineer
    Structural Engineering Branch 2
- **Project Managers**
  - **Getachew Tesfaye**
  - **Prosanta Chowdhury**

Presentation Outline

United States Nuclear Regulatory Commission
Protecting People and the Environment

Chapter 19.1 - Probabilistic Risk Assessment

1) PRA Quality
2) Internal Events PRA At-Power
3) PRA-Based Seismic Margin Assessment

   Internal Flooding PRA At-Power

   Internal Fires PRA At-Power

   Other External Events Risk Evaluation
4) PRA for Other Modes of Operation
5) Level 2 PRA At-Power

   Level 2 PRA for Other Modes of Operation
6) Uses and Applications of PRA

   Results & Conclusion

Outline (Continued)

United States Nuclear Regulatory Commission
Protecting People and the Environment

Chapter 19.2 - Severe Accident Evaluation

1) Severe Accident Prevention
2) Severe Accident Mitigation
3) Containment Performance Capability
4) Accident Management
5) Consideration of Potential Design Improvements & Conclusion

Review Approach

U.S.NRC
United States Nuclear Regulatory Commission
Protecting People and the Environment

- Acknowledged the PRA and severe accident related requirements (10 CFR Part 52), Commission's safety goals, SRP, PRA standard
- Received training on U.S. EPR design
- Participated in the pre-application quality assurance audit
- Reviewed pre-application topical report on severe accident evaluation
- Developed initial risk insights to support other technical branches
- Discussed EPR designs with other technical branches
- Performed audits at AREVA's offices
- Discussed technical issues with other NRC offices (RES, NRR)
- Ensured consistency with other design certifications
- Participated in the Multinational Design Evaluation Program (MDEP)

Overview of Design Certification Application

U.S.NRC
United States Nuclear Regulatory Commission
Protecting People and the Environment

Chapter 19.1 - Probabilistic Risk Assessment		
SE Section (Application Section)	**Subject**	**Number of SE Open Items**
19.1.4.2 (19.1.2)	Quality of PRA	1
19.1.4.3 (19.1.3)	Special Design/Operational Features	0
19.1.4.4 (19.1.4)	Internal Events PRA At-Power	7
19.1.4.6.1 (19.1.5.1)	PRA-Based Seismic Margin Assessment	3
19.1.4.6.2 (19.1.5.2)	Internal Flooding PRA At-Power	0
19.1.4.6.3 (19.1.5.3)	Internal Fires PRA At-Power	1
19.1.4.6.4 (19.1.5.4)	Other External Events Risk Evaluation	0
19.1.4.7 (19.1.6)	PRA for Other Modes of Operation	0
19.1.4.5 (19.1.4.2)	Level 2 Internal Events PRA At-Power	2
19.1.4.6.2.9 & 19.1.4.6.3.8 (19.1.5.2.3 & 19.1.5.3.3)	Level 2 External Events PRA At-Power	0
19.1.4.7.2 (19.1.6.2)	Level 2 PRA for Other Modes of Operation	1
19.1.4.1 & 19.1.4.8 (19.1.1 & 19.1.7)	Uses and Applications of PRA	0
	Totals	**15**
Total Number of RAIs = 24; Number of Questions = 316		

Overview of Design Certification Application

Chapter 19.2 - Severe Accident Evaluation		
SE Section (Application Section)	**Subject**	**Number of SE Open Items**
19.2.4.2 (19.2.2)	Severe Accident Prevention	0
19.2.4.3 (19.2.3)	Severe Accident Mitigation	2
19.2.4.4 (19.2.4)	Containment Performance Capability	2
19.2.4.5 (19.2.5)	Severe Accident Management	1
19.2.4.6 (19.2.6)	Consideration of Potential Design Improvements	0
	Totals	**5**
Total Number of RAIs = 7; Number of Questions = 55		

Description of SE Open Items

- **RAI 289, Question 19-329 (PRA Quality)*:** Plans for PRA update and method for tracking items for which updates are needed (e.g., design changes, peer review findings, model errors)
- **RAI 227, Question 19-284 (IEs PRA)*:** Justification for postulated failure rates of operating system and application software
- **RAI 227, Question 19-287 (IEs PRA)*:** Treatment of dependencies between the protection system (PS) and instrumentation and control (I&C) systems modeled as undeveloped events
- **RAI 227, Question 19-292 (IEs PRA)*:** Consideration of I&C common-cause failures (CCFs) that could both cause an initiating event and affect mitigation
- **RAI 227, Questions 19-293, 19-294, and 19-295 (IEs PRA)*:** Common-cause failure (CCF) modeling of processor and sensor failures and exclusion of input/output module CCFs
- **RAI 289, Question 19-328 (IEs PRA)*:** Assumption that AV42 priority modules are not subject to CCFs

***** Open items will be discussed in Technical Topics of Interest

Description of SE Open Items

- **RAI 234, Question 19-304 (SMA)*:** Implementation of PRA-based seismic margin analysis
- **RAI 349, Question 19-330 (SMA):** Results of the HCLPF Sequence Assessment
- **RAI 349, Question 19-331 (SMA):** Evaluation of seismic events during LPSD conditions (currently documented in SER Section 19.1.4.7)
- **RAI 269, Question 19-327 (Fire PRA)*:** Reactor coolant pump fire scenario
- **RAI 349, Question 19-334 (Level 2 PRA)*:** Requested additional information on the impacts of uncertainties associated with the dynamic load capacity of the reactor cavity pit from ex-vessel steam explosions
- **RAI 349, Question 19-335 (Level 2 PRA)*:** Requested revised analyses on multiple SGTR tube failures
- **RAI 349, Question 19-333 (Level 2 PRA)*:** Requested additional information regarding air ingression and enhanced Ru release during severe accident events at shutdown

Description of SE Open Items

- **RAI 262, Questions 19-319 thru 19-325 (SA Mitigation)*:** Resolve the differences between MAAP 4.0.7 and MELCOR 1.8.6 confirmatory calculations
- **RAI 349, Question 19-332 (SA Mitigation)*:** Requested additional information on material characteristics of Zirconia
- **RAI 234, Question 19-305 (CPC)*:** Containment capacity to withstand pressure from 100% metal-water reactions
- **RAI 234, Question 19-306 (CPC)*:** Containment structural performance expectation to withstand pressures from the more likely accident scenarios
- **RAI 133, Question 19-243 (SA Management)*:** Additional information on severe accident mitigation strategies

Technical Topics of Interest

Section 19.1.4.2 - Quality of PRA

- The applicant performed a self assessment against the ASME PRA Standard RA-Sb-2005, “Standard for Probabilistic Risk Assessment for Nuclear Power Plant Applications”
- The applicant conducted a peer review using Nuclear Energy Institute (NEI) 05-04, “Process for Performing Follow-on PRA Peer Reviews Using the ASME PRA Standard” and ASME RA-Sc-2007
- DC/COL-ISG-003 states that “Peer review of the DC PRA is not required prior to application”

Technical Topics of Interest

Section 19.1.4.2 - Quality of PRA

- Peer review results show that, of the 328 SRs:
  - "Met" - 225 SRs (68 percent)
  - "Not Applicable" - 30 SRs (9 percent)
  - "Not Met as Not Achievable" - 41 SRs (13 percent)
  - "Not Met on Basis of Technical Merit" - 32 SRs (10 percent)
- **RAI 54, Question 19.01-14** - The main reasons for the assignment of being "Not Met as Not Achievable" are:
  - Unavailability of plant-specific data
  - Detailed design information
  - Procedures
  - As-built walkdowns and confirmations

Technical Topics of Interest

Section 19.1.4.2 - Quality of PRA

U.S.NRC
United States Nuclear Regulatory Commission
Protecting People and the Environment

- **RAI 54, Question 19.01-15** – The findings associated with "Not Met on Basis of Technical Merit" SRs are:
  - Incomplete PRA documentation (20 SRs)
  - Limited information (9 SRs)
  - Incomplete model (3 SRs)

    (The applicant analyzed and determined that none of these 3 findings are significant)
- The peer review provided the staff an added level of confidence in the U.S. EPR PRA models, results, and insights

Technical Topics of Interest

Section 19.1.4.2 - Quality of PRA

- **DC/COL-ISG-3** - "PRA maintenance should commence at the time of application for both DC and COL applicants. This means that the PRA should be updated to reflect plant modifications if there are changes to the design"
- **RAI 289, Question 19-329 (Open Item**) - The applicant was asked to describe:
  - The method of tracking items for which PRA updates are needed (e.g., design changes, peer review findings, model errors)
  - The next update of PRA and FSAR PRA description/results
  - The revised detailed documentation available for staff audit

Technical Topics of Interest

Section 19.1.4.4 - Internal Events PRA At-Power

- Introduction & review approach
- Documentation of insights and assumptions
- Reduction of risk compared to operating plants
- Digital I&C (open items)
- Ventilation dependencies

Technical Topics of Interest

Section 19.1.4.4 - Internal Events PRA At-Power

- **Introduction & review approach**
  - Three stages covering Phases 1 and 2
    - **Stage 1:** broad focus, justification of application material
    - **Stage 2:** follow-ups, audits, and Multinational Design Evaluation Program (MDEP)
    - **Stage 3:** documentation and conclusions
  - Total (internal events at-power and shutdown): 14 RAIs, 187 questions

Technical Topics of Interest

Section 19.1.4.4 - Internal Events PRA At-Power

- **Documentation of insights and assumptions**
  - "PRA-based insights" as defined in the SRP
    - Insights that ensure that assumptions made in the PRA will remain valid in the as-to-be-built, as-to-be-operated plant
  - Assumptions made during design certification such that they can be addressed by combined license (COL) applicants
  - U.S. EPR Tables 19.1-102, 19.1-108, and 19.1-109
    - Design Features Contributing to Low Risk
    - PRA Based Insights
    - General Modeling Assumptions

Technical Topics of Interest

Section 19.1.4.4 - Internal Events PRA At-Power

U.S.NRC
United States Nuclear Regulatory Commission
Protecting People and the Environment

Table 19.59-18 (Sheet 14 of 24)

AP1000 PRA-BASED INSIGHTS

Insight	Disposition
13. (cont.)	
To prevent flooding in a radiologically controlled area (RCA) in the Auxiliary Building from propagating to non-radiologically controlled areas, the non-RCAs are separated from the RCAs by 2 and 3-foot walls and floor slabs. In addition, electrical penetrations between RCAs and non-RCAs in the Auxiliary Building are located above the maximum flood level.	3.4.1.2.2.2
14. The following minimizes the probability for fire and flood propagation from one area to another and helps limit risk from internal fires and floods:	
- Fire barriers are sealed, to the extent possible (i.e., doors).	9.5.1.2.1.1
- Structural barriers which function as flood barriers are watertight below the maximum flood level.	3.4.1.1.2
- Establishing administrative controls to maintain the performance of the fire protection system is the responsibility of the COL applicant.	Table 9.5.1-1, Item 29

Technical Topics of Interest

Section 19.1.4.4 - Internal Events PRA At-Power

U.S.NRC
United States Nuclear Regulatory Commission
Protecting People and the Environment

Table 19.1-102—U.S. EPR Design Features Contributing to Low Risk
Sheet 1 of 7

No	U.S. EPR Design Feature Description	Disposition
1	**High level of redundancy and independence for safety systems**	
	The U.S. EPR design incorporates four trains of most safety systems, and provides for significant separation:	
	• Four trains of the safety injection systems (LHSI, MHSI, and accumulators).	Tier 1, Section 2.2.3; Tier 2, Section 6.3
	• Four trains of emergency feedwater (EFW), supplying four steam generators. Each train has an EFW water storage tank for its suction source.	Tier 1, Section 2.2.4; Tier 2, Section 10.4.9.2.1
	• Four safety trains of support systems (cooling trains, building HVAC, and electric power).	Cooling Trains: Tier 2, Section 9.2.2; Tier 2, Section 9.2.1.2 HVAC: Tier 1, Section 2.6.6; Tier 2, Section 9.4.5 Electrical power: Tier 1, Section 2.5.1; Tier 2, Section 8.1.2

Technical Topics of Interest

Section 19.1.4.4 - Internal Events PRA At-Power

U.S.NRC
United States Nuclear Regulatory Commission
Protecting People and the Environment

Table 19.1-108—U.S. EPR PRA Based Insights
Sheet 1 of 5

No	U.S. EPR PRA Based Insight	Disposition
1	**Significance of AC power to the core-damage results** Despite the provisions made for the reliable supply of offsite and onsite AC power, the risk results indicate that losses of offsite power are among the dominant contributors to the frequency of core damage. Since the U.S. EPR employs active safety systems that derive their motive power from AC sources, this is to be expected. The CDF remains low because of the level of redundancy and diversity incorporated into the AC systems.	Tier 2, Section 19.1.4.1.2.2
2	**Modest contribution of SLOCA** Small LOCAs are less significant than are losses of offsite power. This is large part due to the four-train redundancy of the safety injection systems. The contribution from SLOCAs is, however, still important on a relative basis, because of the potential for common-cause failures of the systems needed to prevent core damage (e.g., common injection check valves, MHSI and actuation systems).	Tier 2, Section 19.1.4.1.2.2

Technical Topics of Interest

Section 19.1.4.4 - Internal Events PRA At-Power

U.S.NRC
United States Nuclear Regulatory Commission
Protecting People and the Environment

Table 19.1-109—U.S. EPR PRA General Assumptions
Sheet 6 of 16

No.	Category[1]	PRA General Assumptions[2]
32	SYS	If both means of thermal barrier cooling are lost (CVCS seal injection and CCW thermal barrier cooling), the applicable seal LOCA assumptions are summarized below: • If the RCPs are not tripped within 10 minutes (either automatically or manually), a seal LOCA is assumed. • If seal leak-off valves fail open on any of the four RCPs, the probability of a seal LOCA is estimated to be 0.2.

2. The PRA assumptions will be reevaluated as part of the PRA maintenance and update process. The PRA maintenance and upgrade process is described in Section 19.1.2.4. COL item 19.1-9 listed in Table 1.8-2—U.S. EPR Combined License Information Items is provided to confirm that assumptions used in the PRA remain valid for the as-to-be-operated plant.

Technical Topics of Interest

Section 19.1.4.4 - Internal Events PRA At-Power

- **Reduction of risk compared to operating plants**
  - Station blackout (SBO)
  - Loss-of-coolant accidents (LOCA)
  - Loss of heat removal
  - Steam generator tube rupture (SGTR)

(FSAR Section 19.1.3 and Table 19.1-102)

Technical Topics of Interest

Section 19.1.4.4 - Internal Events PRA At-Power

- **Digital I&C (open items)**
  - Complex model with detailed PS failures and undeveloped events for some other systems and failures
  - Three major points to discuss:
    - Software reliability
    - Interactions among systems
    - Data
  - Multiple open items:
    - RAI 227, Questions 19-284, 19-287, and 19-292 to 19-295
    - RAI 289, Question 19-328
    - Software failure rates, system dependencies, and CCFs

Technical Topics of Interest

Section 19.1.4.4 - Internal Events PRA At-Power

- **Ventilation dependencies**
  - Conservative assumption affects risk
  - Ventilation failure in one safeguard building (SB) can lead to failures in a second SB via a component cooling switchover dependent on ventilation
  - Staff asked questions to evaluate assumptions:
    - Running CCW train (worst case)
    - Switchover ventilation dependency
  - Applicant documented insights and assumptions

Technical Topics of Interest

Section 19.1.4.4 - Internal Events PRA At-Power

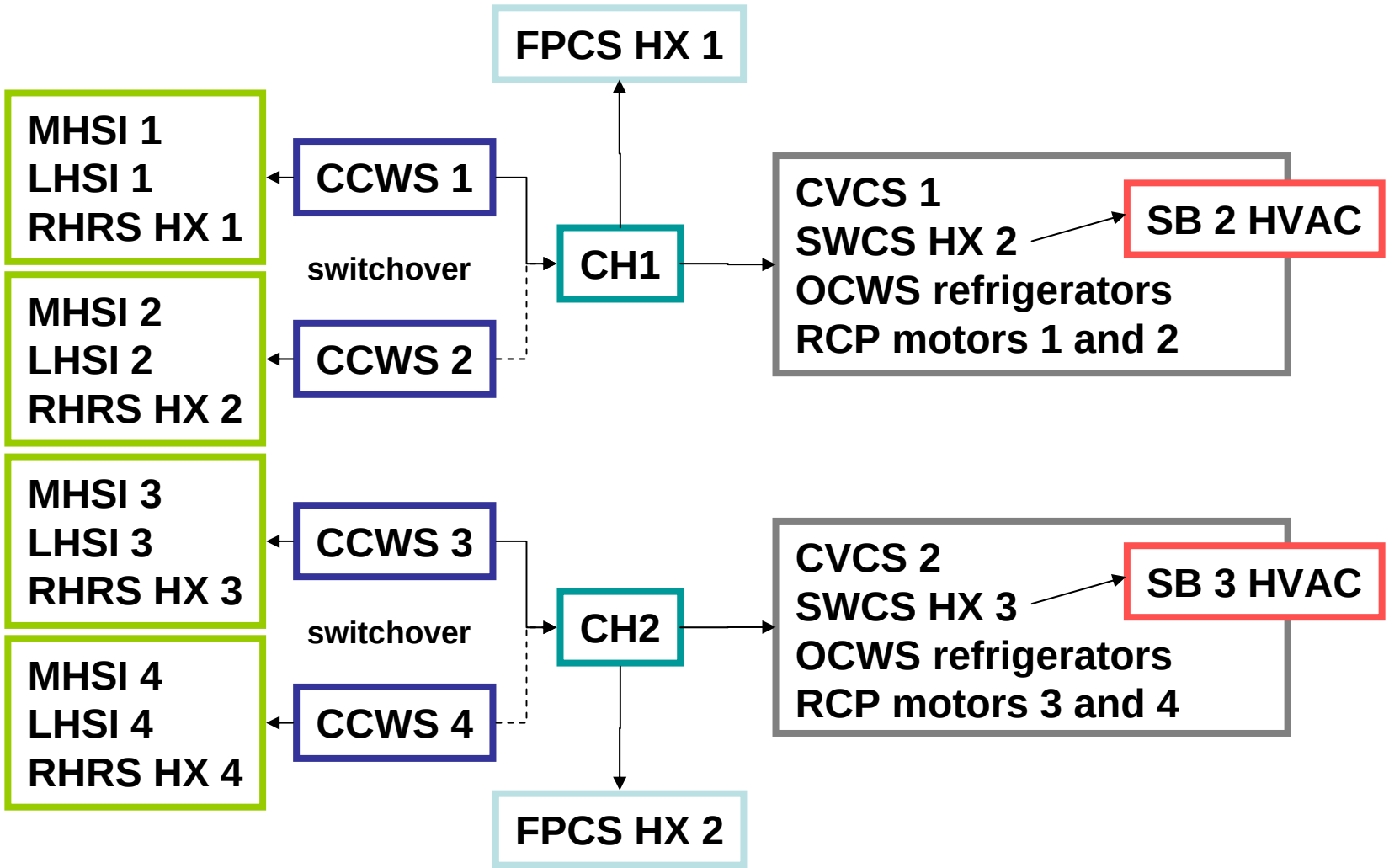

Technical Topics of Interest

Section 19.1.4.4 - Internal Events PRA At-Power

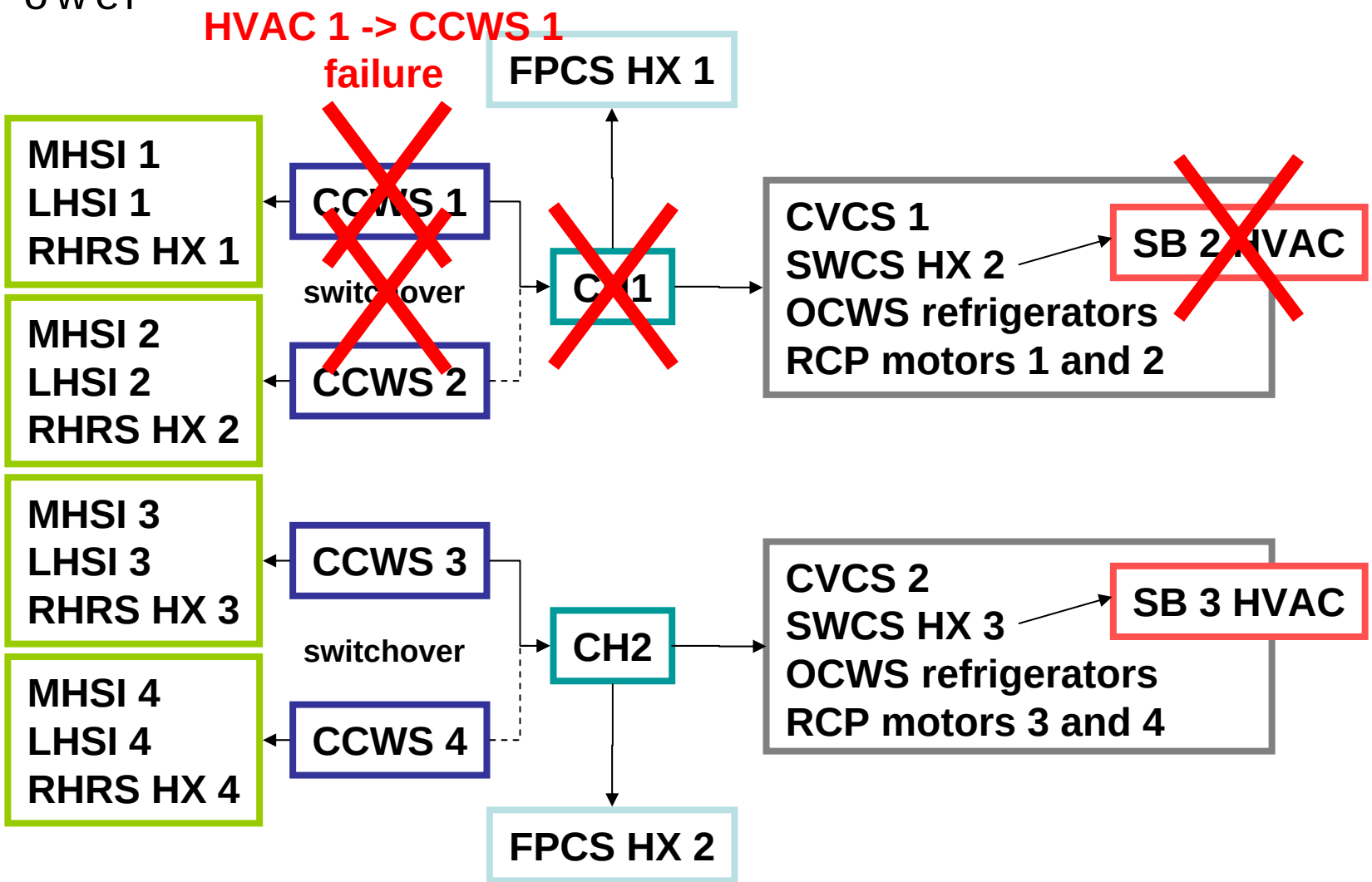

Conclusion

Section 19.1.4.4 - Internal Events PRA At-Power

- **Except for the open items in this section (digital I&C), the IE PRA at-power meets the acceptance criteria:**
  - **10 CFR 52.47(a)(27):** Description of the design-specific PRA and its results.
  - **SRP:** Ensure applicant used the PRA results and insights to identify and establish specifications and performance objectives
  - **SRP:** Identify major design features that contribute to the lower risk of the proposed design compared to existing designs
  - **SRP:** Consider the impact of data uncertainties on the risk estimates; review importance and sensitivity studies
  - **SRP:** Confirm that the assumptions are identified in the design certification such that they can be addressed by the COL

Technical Topics of Interest

Section 19.1.4.6.1 - PRA-Based Seismic Margin Assessment

- **EPR PRA-based seismic margin analysis**
  - Developed accident sequences using event and fault trees from the internal event system model
  - Established SEL for SSCs on seismic sequences
  - Determined sequence-level high-confidence-and-low-probability-of-failure (HCLPF) capacity (margin)
    - Fragility analysis of SSCs in SEL
    - Sequence-level HCLPF capacity

Technical Topics of Interest

Section 19.1.4.6.1 - PRA-Based Seismic Margin Assessment

- **Open Item (RAI 234, Question 19-304)**
  - Fragility of SSCs established based on NUREG/CR-0098 spectra which are not applicable to standard designs
  - Fragility of SSCs did not account for the effect of NI stability
  - COL information items should include: 1) COL update of DC PRA-based SMA to incorporate site- and plant-specific features, 2) COL holders will verify the as-designed and as-built plant-level seismic margin

Technical Topics of Interest

Section 19.1.4.6.2 - Internal Flooding PRA At-Power

- No open items
- Topics of interest:
  - Flooding frequencies
  - RB annulus flooding scenario
  - Spatial impacts

Technical Topics of Interest

Section 19.1.4.6.2 - Internal Flooding PRA At-Power (Methodology)

- U.S. EPR Internal Flooding PRA included the following steps:
  - Calculated flooding frequency, analyzed possible flooding scenarios, and selected the worst scenario
  - Applied the total building flooding frequency to the worst scenario and calculated CDF and LRF
- Selected buildings (contain IE PRA SSCs):
  - 4 Safeguard Buildings
  - Fuel Building
  - Reactor Building Annulus
  - Essential Service Water System Building
  - Turbine Building

Technical Topics of Interest

Section 19.1.4.6.2 - Internal Flooding PRA At-Power (Flooding Frequencies)

- The applicant chose Topical Report EPRI TR-102266, “Pipe Failure Study Update,” 1993, to derive internal flooding frequencies
- **RAI 4, Question 19-50 and RAI 142, Question 19-262** – Used EPRI Report 1013141 “Pipe Rupture Frequencies for Internal Flooding PRAs, Revision 1” for non-piping components flooding frequencies
- **RAI 120, Question 19-228c** – The applicant identified the human-induced flooding events and estimated the flooding frequency (4.4E-4/yr)

Technical Topics of Interest

Section 19.1.4.6.2 - Internal Flooding PRA At-Power (Flooding Scenarios)

- Event tree was developed for the RB annulus flooding scenario. The end states included:
  - Operator successfully isolates flooding
  - Flooding propagates to both SBs 2 and 3
  - Flooding propagates to SB 2 only
  - Flooding propagates to SB 3 only
  - Flooding is contained inside the RB annulus and reaches the electrical penetrations (core damage)
- **RAI 4, Question 19-52 and RAI 120, Question 19-228e** - Treatment of barrier structural (doors) failure may not have been adequately credited and assessed in the model

  Sensitivity study was performed considering more time for isolation

  The two approaches yielded similar CDF of 3.2E-8/yr

Technical Topics of Interest

Section 19.1.4.6.2 - Internal Flooding PRA At-Power (Flooding Scenario)

- **RAI 4, Question 19-51 -** The potential electrical equipment failures in other divisions or at other locations due to water contact or pipe whip were not addressed

  Applicant's assessment identified no potential electrical equipment failures in multiple divisions or locations. Due to the divisional separation, flood events would have effects restricted to that particular division. SB switchgear rooms were not included in the internal flooding PRA, because no flood scenario was identified that could affect them

Conclusion

Section 19.1.4.6.2 - Internal Flooding PRA At-Power

- Properly identified and selected the flood areas consistent with the layout of U.S. EPR buildings in FSAR Tier 2, Chapter 1
- U.S. EPR internal flooding CDF of 6.1E-8/yr is below the Commission's safety goal of 1.0E-4/yr
- The IF PRA at-power meets the acceptance criteria:
  - 10 CFR 52.47(a)(27): Description of the design-specific PRA and its results
  - SRP

Technical Topics of Interest

Section 19.1.4.6.3 - Internal Fires PRA At-Power

- One open item
- Topics of interest
  - Fire ignition frequency
    - The use of RES/OERAB/S02-01
    - Main control room fire frequency
  - Fire scenario
    - Reactor coolant pump (RCP) fires
    - Emergency power generating building (EPGB) fires
  - Spatial impact

Technical Topics of Interest

Section 19.1.4.6.3 - Internal Fires PRA At-Power

- The U.S EPR Fire PRA included the following steps:
  - Defined fire areas (FAs)
  - Estimated fire frequency
  - Assumed each fire will grow to be a fully developed fire
  - Analyzed possible fire scenarios for the location
  - Selected the worst-case scenario
  - Credited automatic fire suppression
  - Credited human recovery actions (control room fires)
  - Applied the total FA frequency to the worst scenario
  - Calculated the corresponding CDF and LRF

Technical Topics of Interest

Section 19.1.4.6.3 - Internal Fires PRA At-Power (Fire ignition frequency)

- Generic locations - Used RES/OERAB/S02-01, “Fire Events – Update of U.S. Operating Experience 1986-1999,” January 2002
- Transformer yard, MFW/MS valve room, and containment – Used NUREG/CR-6850, “EPRI/NRC-RES Fire PRA Methodology for Nuclear Power Facilities,” September 2005
- The staff finds that the fire frequencies in RES/OERAB/S02-01 were developed for the reactor oversight purposes and would be inappropriate for use in developing the fire PRA

Technical Topics of Interest

Section 19.1.4.6.3 - Internal Fires PRA At-Power (Fire Ignition Frequency)

- **RAI 97, Question 19-223** - The applicant performed a sensitivity study to address possible differences between fire frequencies obtained from RES/OERAB/S02-01 and NUREG/CR-6850
- The results show that RES/OERAB/S02-01:
  - Underestimated the fire frequency in switchgear rooms
  - Overestimated the fire frequency for the control room
  - Gave comparable frequencies for the Auxiliary Building, Turbine Building, solid waste system (SWS) pumphouse, and battery room
- The estimated change in fire CDF is insignificant (+5%)

Technical Topics of Interest

Section 19.1.4.6.3 - Internal Fires PRA At-Power (Fire Ignition Frequency)

- NUREG/CR-6850 (2.6E-3/yr) and RES/OERAB/S02-01 (7.2E-3/yr) control room fire frequencies may not be appropriate to represent U.S. EPR control room fire
- **RAI 227, Question 19-301 -** The applicant stated that there is no industry data available regarding the fire ignition frequency for digital control rooms

  A factor of 0.5 was applied to the RES/OERAB/S02-01 control room fire frequency (7.2E-3/yr) to account for the digital design (including fiber optic cables which are not susceptible to self-ignition) and the presence of computers instead of analog control panels

Technical Topics of Interest

Section 19.1.4.6.3 - Internal Fires PRA At-Power (RCP Fire Scenario)

- Reactor coolant pump fires due to oil leakage have been the source of most fires inside containment
- **RAI 66, Question 19.01-29** – The applicant stated that due to the specific oil collecting system, RCP oil fires with a high heat release are extremely unlikely and, therefore, were not considered as a credible fire scenario in the containment

Technical Topics of Interest

Section 19.1.4.6.3 - Internal Fires PRA At-Power (RCP Fire Scenario)

RCP Fire Scenario	Consequences	Frequency (1/yr)	CCDP	CDF (1/yr)	% of Fire CDF
Pump Fire	Loss of one pump	6.1E-03	3.6E-08	2.2E-10	0.12%
Pump Oil Fire with a Failure of Lube Oil Collection System (limited leak)	Loss of one SG	5.2E-04	2.1E-07	1.1E-10	0.06%
Pump Oil Fire with a Catastrophic Failure of Lube Oil Collection System (major spill)	Loss of two SGs	5.2E-05	1.1E-06	5.7E-11	0.03%

Technical Topics of Interest

Section 19.1.4.6.3 - Internal Fires PRA At-Power (RCP Fire Scenario)

- The CCDP (1.1E-6) of the RCP fire scenario “Pump Oil Fire with a Catastrophic Failure of Lube Oil Collection System” is low compared to the calculated CCDP of 8.7E-5 given an electric motor fire in the containment
- **RAI 269, Question 19-327 -** The applicant was asked for justification
- The response is currently under review and is being tracked as an open item

Technical Topics of Interest

Section 19.1.4.6.3 - Internal Fires PRA At-Power (EPGB Fire Scenario)

- EPGBs are excluded from the fire PRA
- **RAI 66, Question 19.01-31** – The applicant stated that the EPGBs were excluded based on the impact of the plant response, which is limited to a loss of one EDG train

  EPGB fire frequency of 7E-3/yr (2E-5 during the 24-hour mission time) compared to EDG non-fire-related unavailability (i.e., EDG failure to start = 4.4E-3 and EDG failure to run = 2.8E-2)

  The effects on fire CDF were evaluated to be insignificant

Technical Topics of Interest

Section 19.1.4.6.3 - Internal Fires PRA At-Power (Spatial Impact)

- U.S. EPR Fire PRA does not address the potential impact on components located outside of that fire area
- **RAI 66, Question 19.01-20** – The applicant stated that based on the concepts of cable routing, the fire scenarios were defined such that damage to cables routed through a specific PFA would have no impact on components located outside of the PFA

Conclusion

Section 19.1.4.6.3 - Internal Fires PRA At-Power

- The U.S. EPR fire CDF of 1.8E-7/yr is well below the Commission's safety goal of 1E-4/yr
- The Internal Fires PRA at-power meets the acceptance criteria:
  - 10 CFR 52.47(a)(27): Description of the design-specific PRA and its results
  - SRP

Technical Topics of Interest

Section 19.1.4.6.4 - Other External Events Risk Evaluation

- The applicant performed a qualitative screening analysis to assess the risk impacts of
  - High wind
  - Tornado
  - External flooding
  - External fire
- The applicant considered other external events such as transportation accident, dam failure, hurricane, tsunami, lightning, turbine generated missile, etc., as site-specific events and chose not to evaluate them at the design certification stage

Conclusion

Section 19.1.4.6.4 - Other External Events Risk Evaluation

- The applicant included COL Information Item 19.1-7:

  "A COL applicant that references the U.S. EPR design certification will perform the site-specific screening analysis and the site specific risk analysis for external events applicable to their site."

- The applicant has addressed the potential risk impacts of external events in conformance with the SRP

Technical Topics of Interest

Section 19.1.4.7 - PRA for Other Modes of Operation

- No open items
- Topics of interest:
  - Reduction of risk compared to operating plants
  - Equipment availability
  - Shutdown schedule and decay heat load
  - Temporary pressure boundaries

Technical Topics of Interest

Section 19.1.4.7 - PRA for Other Modes of Operation

- **Reduction of risk compared to operating plants**
  - On-line maintenance
  - Automatic actions on loss of level
  - Operational strategy

(FSAR Section 19.1.3 and Tables 19.1-102 and 19.1-108)

Technical Topics of Interest

Section 19.1.4.7 - PRA for Other Modes of Operation

- **Equipment availability**
  - Assumed availability in Table 19.1-89 and Table 19.1-109, Item 56
  - Sensitivity studies performed to identify risk-significant systems
  - Applicant revised MODE 5/6 technical specifications to include:
    - Reactor coolant system (RCS) loop level signal
    - Automatic start of medium head safety injection (MHSI) on low level
    - MHSI system
    - In-containment refueling water storage tank (IRWST)

Technical Topics of Interest

Section 19.1.4.7 - PRA for Other Modes of Operation

- **Shutdown schedule and decay heat load**
  - Schedule now clearly documented, considering:
    - 18-month refueling cycle
    - 14-day refueling outage
    - 5 days of forced outage per year
    - Additional distributed shutdown time to achieve a 94% availability
  - Staff reviewed effect of assumptions on decay heat calculations and success criteria

Technical Topics of Interest

Section 19.1.4.7 - PRA for Other Modes of Operation

- **Temporary pressure boundaries**
  - Failure not modeled in PRA because:
    - Nozzle dams not required for refueling outages
      - Steam generator maintenance following full core offload
    - Freeze seals not part of the U.S. EPR maintenance procedures
    - No bottom-head mounted instrumentation
  - Applicant documented assumptions for future evaluation during operation

Conclusion

Section 19.1.4.7 - PRA for Other Modes of Operation

- Except for at-power open items (digital I&C) that also apply to shutdown, the Level 1 shutdown PRA meets the acceptance criteria:
  - **10 CFR 52.47(a)(27):** Description of the design-specific PRA and its results
  - **SRP:** Ensure applicant used the PRA results and insights to identify and establish specifications and performance objectives
  - **SRP:** Identify major design features that contribute to the lower risk of the proposed design compared to existing designs
  - **SRP:** Consider the impact of data uncertainties on the risk estimates; review importance and sensitivity studies
  - **SRP:** Confirm that the assumptions are identified in the design certification such that they can be addressed by the COL

Technical Topics of Interest

Section 19.1.4.4 - Level 1 Internal Events PRA At-Power : Success Criteria

- AREVA used MAAP 4.0.7 to analyze success criteria for averting core damage for the following scenarios:
  - Loss of main feedwater (LOMFW)
  - Loss of coolant accidents (LOCA) (except large break LOCAs)
  - Steam generator tube rupture (STGR)
  - Steam line break inside containment (SLBI)
  - Steam line break outside containment (SLBO)
  - Feed and bleed scenarios
- Core damage was defined as uncovering the core, causing the fuel to heat, oxidize, and become severely damaged
  - For most transient and LOCA events, AREVA assumed core damage if the peak cladding temperature (PCT) exceeded 2200 °F
  - In ATWS scenarios, the applicant assumed core damage if RCS pressure exceeded 130 percent of design pressure

Success Criteria (continued)

- Benchmarking studies were performed using S-RELAP5 because certain scenarios may challenge the simplified models in MAAP
  - MAAP cases resulting in a PCT between 1400°F and 1800°F were examined in detail, often with a corresponding S-RELAP5 calculation
  - Below 1400°F, success was assumed; above 1800°F, core damage was assumed directly from the MAAP results
  - Initiating events analyzed included LOFW, SBLOCA, MBLOCA
- AREVA concluded that, overall, the MAAP 4.0.7 results agree with the S-RELAP results, and recommended further analysis for some scenarios

Success Criteria (continued): AREVA Developed the Following Acceptance Criteria

U.S.NRC
United States Nuclear Regulatory Commission
Protecting People and the Environment

- MAAP4 cases resulting in a PCT of ≤1400°F are considered a success
- MAAP4 cases resulting in a PCT of ≥1800°F are considered a failure
- MAAP4 cases resulting in a PCT greater than 1400°F and less than 1800°F are examined in detail, possibly with a corresponding S-RELAP5 calculation
- For overpressure events, the RCS pressure must be less than 130% the design pressure of 176 bar(abs) (2550 psia)
- For low power and shutdown events, the core must remain covered (i.e., the two-phase-level in the reactor vessel is above the elevation of the top of the core)
- For all events, a 24-hour mission time is required. Therefore, EFWS should be able to inject for this period and all 4 EFW tanks should not become empty within 24 hours after event initiation

Conclusion

Section 19.1.4.4 - Internal Events PRA At-Power

- The staff finds the applicant's approach to success criteria determination prudent, and is confident that it has led to the development of appropriate acceptance criteria for the use of MAAP4 in success criteria determination. The staff further notes that the applicant's acceptance criteria call for further analysis for some scenarios

Approach Taken in Level 2 PRA and Severe Accident Review

U.S.NRC
United States Nuclear Regulatory Commission
Protecting People and the Environment

- Reviewed a pre-application topical report on U.S. EPR Severe Accident Evaluation (ANP-10268P) and wrote a Safety Evaluation Report
- Reviewed the FSAR and identified where additional information was required
- Performed audits at AREVA's offices over many days
  - Could not copy documents or obtain electronic files
- Prepared RAI questions designed to place as much information on the docket as was necessary to be able to carry out a thorough review at the offices of NRC and its contractors
  - Some responses are long, detailed, and very informative
- Prepared follow-up RAI questions to provide additional clarification and reviewed responses
- Prepared the SER with open items

Technical Topics of Interest

Section 19.1.4.5 - Level 2 Internal Events PRA At-Power : Containment Event Trees

- The quantification of CETs is largely based on the results of plant-specific MAAP (Version 4.07) analyses, supplemented by results of phenomenological evaluations (PE)
- There are two types of interfaces between the Level 1 and Level 2 PRA models: The core damage end states (CDESs), and the systems credited in the event trees. The core damage accident sequences identified in the Level 1 analysis are binned into 30 distinct CDESs
- Prior to transfer to a Level 2 CET, each individual end state in the CDES is transferred through an intermediate "CDES link" event tree that allows some technical aspects of the linked model to be implemented
- There are eight CETs, seven of which receive a direct transfer from the CDES link event trees
- Once sequences are transferred to a CET, they generally pass through only that CET and are assigned to a release category (RC)

Containment Event Trees (continued)

United States Nuclear Regulatory Commission
Protecting People and the Environment

- The top events included in the CETs address phenomenological events, systems, and human actions credited to mitigate severe accidents. These events would be expected to have significant impacts on severe accident progression, affecting, directly or indirectly, the likelihood of containment failure or bypass and the magnitude of radiological releases
- Detailed discussions of CETs that use PEs are provided in the response to RAI 6, Question 19-81, 19-82, and 19-83
- Detailed discussions of the MAAP runs used to support CET quantification are provided in the responses to RAI 6, Question 19-82
  - A set of 91 MAAP accident progression analyses to support development of the containment event trees and supporting fault trees for branch probabilities is characterized in Table 19-82-1
  - A second set of 25 MAAP analyses to support the source term analysis is characterized in Table 19-82-2
- A mapping of the various MAAP runs to the release categories is provided in the response to RAI 6, Question 18-83, Table 19-83-1. A source term grouping diagram, that includes the attributes of accident sequences considered in defining and describing the release categories, is provided in Figure 19-83-1

Technical Topics of Interest

Section 19.1.4.5 - Level 2 Internal Events PRA At-Power : Phenomenological Evaluations

- AREVA carried out several plant-specific phenomenological evaluations (PE) to quantify the containment event tree (CET) in the Level 2 PRA:
  - Induced rupture of the reactor system pressure boundary
  - Fuel-coolant interactions
  - In-vessel core recovery
  - Phenomena at vessel failure (vessel rocketing, DCH)
  - Hydrogen deflagration, flame acceleration, and deflagration-to-detonation transition
  - Long-term containment challenges
- Additional information on the PEs was provided in a number of RAI responses, which the staff mostly found satisfactory
  - One open item remains, RAI 349, Question 19-334, related to fuel-coolant interactions

Induced Rupture of the RCS Pressure Boundary

U.S.NRC
United States Nuclear Regulatory Commission
Protecting People and the Environment

- The PE investigated induced ruptures of the hot leg nozzle, surge line nozzle, or steam generator tubes during high-pressure severe accidents
  - MAAP 4.0.7 was used to investigate such sequences and evaluate the sensitivities of the induced rupture phenomena
  - Uncertainty distributions were developed for the key parameters and Monte Carlo simulations were performed to determine predicted failure times
  - Sensitivity studies were carried out to assess the potential impacts of core blockages. However, the effects of instrument tube failures in the damaged core were not considered

Induced Rupture of the RCS Pressure Boundary (continued)

United States Nuclear Regulatory Commission
Protecting People and the Environment

- If SGs were to remain pressurized, the analyses indicated no risk of tube failure for any case analyzed
- Hot leg rupture was, however, assessed to be highly likely (>0.9). The location of hot leg rupture was predicted to be at the weld of the nozzle to the hot leg pipe
- For cases where the SGs are fully depressurized, SG tube failure is predicted to occur with a probability of up to 0.84 for sequences involving loop seal clearing following RCP seal failure or small LOCAs, and with a probability of about 0.0004 for transients
  - The response to RAI 133, Question 19-240, showed results of a MAAP 4.0.7 calculation for a depressurized secondary side and a 50% TW degraded SG tube. The hot leg nozzle was predicted to fail first
  - The staff's confirmatory calculations with MELCOR 1.8.6 predicted the same result, thus resolving Question 19-240

Induced Rupture of the RCS Pressure Boundary: Instrument Tube Failures

United States Nuclear Regulatory Commission
Protecting People and the Environment

- During a severe accident in a PWR where system pressure remains elevated, there is a great propensity for large recirculation of steam & hydrogen between the damaged reactor core & the upper plenum
- In case of PWRs with inverted U-tube steam generators (i.e., most of operating and new plants), counter-current flow patterns also develop between upper plenum, hot leg, and steam generator tubes
- A re-examination of the data records of the TMI-2 accident suggests that hydrogen, steam, and fission products entered the containment during the Zircaloy oxidation phase
  - Implications are that natural circulation may have been impeded, minimizing the natural circulation flows in the hot legs and steam generators
  - Another implication is that the possibility of hydrogen combustion in the vicinity of the seal table must be evaluated

Induced Rupture of the RCS Pressure Boundary: Instrument Tube Failures (continued)

United States Nuclear Regulatory Commission
Protecting People and the Environment

- To further evaluate the potential for induced SG tube failures, the staff issued RAI 22, Question 19-148, and RAI 133, Question 19-244, requesting AREVA to provide information relating to the consequences of instrument tube failures
  - Question 19-244 requested that the applicant provide an analysis of the consequences of failing all of the Aeroball Measuring System (AMS) probes in the region of the core where the Zircaloy oxidation takes place, for the the relevant severe accident scenarios. Results using MAAP 4.0.7 showed lower natural circulation flows in the RCS, and only minor consequences from hydrogen and fission product flows from the vessel to the containment through the instrument tubes
  - Confirmatory calculations using MELCOR 1.8.6 show that, due to the small cross-sectional area of these probes, their failure can only result in a slight increase in the in-vessel hydrogen production and consequent hydrogen concentration inside the instrumentation compartment of the primary containment. These results are similar to those reported by AREVA. Question 19-244 is thus resolved

Fuel-Coolant Interactions: Ex-Vessel Steam Explosions

U.S.NRC
United States Nuclear Regulatory Commission
Protecting People and the Environment

- AREVA evaluated ex-vessel steam explosions probabilistically for a bounding scenario, in which molten corium would be released from the vessel into a four-meters deep pool of saturated water in the cavity pit
- The failure probability was evaluated by comparing a distribution of impulse loads to a distribution of reactor cavity pit structure strengths
  - Mechanical energy release was evaluated by multiplying the mass of corium involved in premixing, the thermal energy stored in the core materials, and the conversion ratio for thermal to mechanical energy
  - Total load was evaluated using Monte Carlo simulations for these three items
  - The impulse loading was evaluated using a correlation relating energy release to peak overpressure and duration
- Very low impulse loads were calculated, leading to conditional probabilities of containment failure from ex-vessel steam explosions of 2.5E-5 and 8.4E-4 for low-pressure and high-pressure core melt scenarios, respectively

Fuel-Coolant Interactions: Ex-Vessel Steam Explosions (continued)

U.S.NRC
United States Nuclear Regulatory Commission
Protecting People and the Environment

- The staff questioned this analytical approach, based on previous NRC-sponsored analyses for other plants under similar conditions (see NUREG/CR-6849, "Analysis of In-Vessel Retention and Ex-Vessel Fuel Coolant Interaction for AP1000," August 2004)
  - Requested technical justification for the very low values for FCI loads estimated by the applicant's approach
  - Requested a mechanistic analysis to support the uncertainty distributions that would provide the range of expected loads on the RPV and reactor pit
  - In response, the applicant provided a structural analysis that resulted in a revised estimate of 5.0E-3 for pit failure
  - The staff requested further information on the impacts of uncertainties associated with estimations of pre-mixing and explosion loads, as well as the consequences of steam explosions from delayed location of core debris from the RPV, in RAI 349, Question 19-334
- RAI 349, Question 19-334 is an open item

Technical Topics of Interest

Section 19.1.4.5 - Level 2 Internal Events PRA At-Power : Accident Release Categories

- 25 release categories were defined by AREVA. The source terms for each RC listed in FSAR Tier 2, Table 19.1-20, are the MAAP results regrouped into nine chemical element groups suitable as input to offsite release calculation models
- Approximately 66 percent of the LRF for internal events is from RC304. This release category represents containment failure before vessel failure with no MCCI occurring, and with unavailability of the SAHRS spray for fission product scrubbing
  - Such scenarios were stated by the applicant to be due primarily to containment overpressure resulting from a steam line break inside containment (SLBI), with failure to isolate multiple SGs
  - The staff questioned the applicant's analysis in RAI 22, Question 19-160, and requested a deterministic analysis to justify the assumptions of containment failure and recriticality from SLBI
  - The applicant used RELAP5 to show there was no return to power, and MAAP 4.0.7 to verify the containment would remain intact. As a result, the LRF contribution from RC304 dropped from about 66 to 27 percent (from 8.5E-9/yr to 2.6E-9/yr, and the overall LRF dropped from 2.2E-8/yr to 9.5E-9/yr
- Since Revision 1 of the FSAR does not yet include these changes, RAI 22, Question 19-160 remains a confirmatory item

Technical Topics of Interest

Section 19.1.4.5 - Level 2 Internal Events PRA At-Power : Source Term Definition

- The applicant's source term analysis was performed using the MAAP 4.0.7 code, which includes U.S. EPR-specific models. It is composed of 12 groups of isotopes
- The source term for each release category was associated with a single representative sequence simulated with MAAP 4.0.7
- RC702 is associated with scenarios involving a single steam generator tube rupture, with an unscrubbed release to the environment. The effects of multiple tube failure was addressed in response to RAI 133, Question 19-233
- The staff was concerned that confirmatory MELCOR 1.8.6 runs calculated releases twice as high as MAAP 4.0.7 for the first 24 hours of the accident
- Consequently, the staff issued RAI 349, Question 19-335, requesting that the applicant:
  - Revise the SGTR analyses to reflect the potential impact of continued heat-up of the steam generator tubes, in order to determine at what level of failure (number of tubes) RCS depressurization can occur, to terminate additional tube failures
  - Extend the present MAAP-based source term calculations to at least 48 hours to account for revaporization, and report the impact on fission product releases and severe accident risk for U.S. EPR.
  - RAI 349, Question 19-335 is presently an open item

Conclusions

Section 19.1.4.5 - Level 2 Internal Events PRA At-Power

- The LRF is dominated by sequences that represent a severe challenge to the containment, or in which the containment function is already defeated (bypassed). These sequences represent:
  - a steam line break sequence inside containment, with failure of three steam lines to isolate, failure to isolate feedwater, and failure to provide boron injection for reactivity control, and
  - SGTR core damage sequences from the Level 1 PRA, including induced ruptures
- Analysis of MELCOR-predicted RCS temperature evolution for a high-pressure scenario (i.e., station blackout) showed that creep-induced failure in the vicinity of the hot-leg nozzles dominated RCS failure. This is consistent with the AREVA MAAP predictions. Furthermore, modeling of the failure of the in-core instrumentation tubes did not appear to alter this behavior, even though some impact on hydrogen release into the containment was noted

Technical Topics of Interest

Sections 19.1.4.6.2.9 & 19.1.4.6.3.8 - Level 2 External Events PRA At-Power

- The LRF from internal flooding is 1.1E-09/yr. About 76% involve early containment failures from hydrogen flame acceleration-induced containment rupture (Release Category RC304, containment failure before vessel failure). About 18% involve thermally-induced SGTRs (RC702). The sensitivity to the combined unavailability of feedwater and manual primary depressurization results in a significant impact on the thermally-induced SGTRs
- The LRF from internal fires is 3.6E-09/yr. About 80% involve early containment failures from hydrogen flame acceleration-induced containment rupture (Release Categories RC303 and RC304, containment failure before vessel failure). About 17% involve thermally-induced SGTRs (RC702). Core damage following a seal LOCA [1.52 cm (0.6 in.) or 5.08 cm (2 in.) equivalent LOCA] is a dominant precursor of high-temperature-induced SGTR

Technical Topics of Interest

Section 19.1.4.7.2 - Level 2 PRA for Other Modes of Operation

- The applicant calculated the LRF for low power and shutdown (LPSD) operation as 5.7E-9/yr. The CCFP is 0.10 and 0.026 for POS C (containment open) and POS D (containment closed) scenarios, respectively. In POS E (fuel load) the containment is open and the CCFP is unity
- The applicant applies the release category and source term results of the at-power level 2 PRA to the results of the shutdown PRA analysis, and states that this approach is bounding
  - The staff requested that this statement be verified, given that during shutdown conditions the reactor vessel is open, and air intrusion into the fuel assembly would enhance oxidation that can result in some fission products (e.g. Ruthenium (Ru)) transforming into more volatile valence states
  - In RAI 349, Question 19-333, the staff requested the applicant to provide additional information regarding air ingression and enhanced Ru release, and sensitivity calculations on the potential impact of increased Ru releases and impacts on the U.S. EPR SAMDA evaluation
- RAI 349, Question 19-333 is an open item

Conclusion

Section 19.1.4.7.2 - Level 2 PRA for Other Modes of Operation

- The staff agrees with the applicant that the results of the Level 2 PRA analysis for shutdown states show that the containment is robust for severe accident phenomenological failures in shutdown conditions
- The applicant needs to provide more information on the impacts of enhanced Ru releases on off-site consequences

Technical Topics of Interest

Sections 19.1.4.1 & 19.1.4.8 - Uses and Applications of PRA & Input to Other Programs

- U.S EPR PRA is currently not used for any formal risk-informed applications
- PRA results and insights are used to support other program (i.e., RAP)
- The regulatory treatment of non-safety systems (RTNSS) process is not applicable (no passive backup systems)

Results & Conclusion

Chapter 19.1 - PRA

- Risk metrics
  - CDF at-power = 5.3E-07/yr CDF at LPSD = 5.8E-8/yr
  - LRF at-power = 2.6E-08/yr LRF at LPSD = 5.7E-9/yr
  - CCFP at-power = 0.05 CCFP at LPSD = 0.098
- Redundancy and spatial separation of the safety SSCs
- CDF, LRF, and CCFP are below the Commission's safety goal
- 9 Confirmatory Items
- 15 Open Items
- Due to the open items and the extent of the confirmatory items, the staff is currently unable to come to an overall conclusion on Section 19.1