UNITED STATES
NUCLEAR REGULATORY COMMISSION
REGION II
SAM NUNN ATLANTA FEDERAL CENTER
61 FORSYTH STREET, SW, SUITE 23T85
ATLANTA, GEORGIA 30303-8931

March 19, 2010

NMED Nos. 090788
NRC Event Nos. 45446

Mr. David B. Amerine
President
Nuclear Fuel Services, Inc.
P. O. Box 337, MS 123
Erwin, TN 37650

SUBJECT: NRC AUGMENTED INSPECTION TEAM REPORT NO. 70-143/2009-011

Dear Mr. Amerine:

On January 7, 2010, the U.S. Nuclear Regulatory Commission (NRC) completed an Augmented Inspection at your Nuclear Fuel Services (NFS) facility. The enclosed report (Enclosure 1) documents the inspection results which were discussed with you and other members of your staff in a public exit meeting on March 2, 2010.

The Augmented Inspection Team was established to review the causes, and your staff's actions following a process upset in a bowl cleaning station of the uranium aluminum process in the Blended Low-enriched Uranium Preparation Facility (BPF) on October 13, 2009. The team reviewed the record of activities that occurred, interviewed personnel, and conducted facility walkdowns. The inspection charter is included as Enclosure 2.

On October 12, 2009, NFS finalized procedure changes to allow chemical processing of high-enriched uranium scrap material in the centrifuge bowl cleaning stations. On October 13, 2009, upon addition of nitric acid into the bowl cleaning station, the solution exhibited an unexpectedly high rate of reaction. The operator shut down the station recirculation pump and shut off the heaters. However, the solution continued to heat up producing an excessive quantity of nitrogen compound gases (NOx). These gases triggered the NOx detectors at the air gap of the nitric acid knockout column which prompted an evacuation of the building. The heated gases also deformed a section of the wet off-gas piping system for the bowl cleaning station and the nitric acid knockout column. In response, the NRC chartered a Special Inspection to review the facts and circumstances surrounding the event.

On October 19, 2009, NFS submitted an event notification to the NRC which stated that laboratory testing of the scrap material indicated that the rate of NOx generation was significantly higher than previously analyzed which could have potentially resulted in a "high occupational consequence." The system design for processing fines material included only one item relied on for safety (IROFS). However, the potential for a high occupational consequence when processing this material required the presence of additional IROFS. Based on the higher potential safety significance of the event and preliminary feedback from the team, which

identified human performance, organizational process and procedural issues as potential contributing factors, the inspection was upgraded to an Augmented Inspection on October 22, 2009. In addition to completing the fact-finding elements of the Special Inspection charter, the team was assigned to independently assess the adequacy of the NFS' decision-making activities associated with the event, independently determine the probable root and contributing causes of the upset, and independently conduct extent of condition and extent of cause evaluations. The team completed its initial inspection activities on October 30, 2009. On November 30, 2009, your staff communicated to the NRC your plans and intentions to restart the uranium aluminum process. Following discussions with NRC staff, you elected to halt restart activities until the team had an opportunity to review your corrective actions and the final root cause evaluation. The team completed onsite inspection activities on January 7, 2010.

The team concluded that the event occurred because multiple error-prevention barriers had failed. These failures were primarily attributable to a lack of management oversight of the change management process and a lack of a questioning attitude exhibited by all personnel involved in handling process change requests. A significant change to the uranium aluminum process was made without appropriately compensating for the increase in risk. The significance of the change went undetected by your staff and later resulted in a process upset that potentially could have had a high consequence occupational exposure. Processes with a significant potential for a high consequence occupational exposure are required to have sufficient IROFS in place to reduce the risk of exposure. The change made to the uranium aluminum process resulted in insufficient IROFS in place for the activity being performed. The team also identified performance issues associated with procedural compliance, technical reviews, safety reviews, written evaluations (required to support decisions made without prior NRC approval), and identification of required IROFS for other processes at the facility. The team determined that the November 30, 2009, decision to restart the uranium aluminum process was less than adequate because your staff did not have a rigorous technical basis and appropriate management review to support the conclusion that the process was ready for restart. In addition, corrective actions that NFS had taken in response to the event did not fully address the causal factors identified by the NRC inspection and NFS review of the upset condition.

The Augmented Inspection was chartered as a fact finding effort. Therefore, the performance issues identified in this report will require additional NRC inspection follow-up and further review prior to determining what enforcement action, if any, is appropriate.

Because of the concerns identified by the team, NRC conducted an interim review of NFS' performance in December 2009. These concerns involved the adequacy of NFS' management oversight of facility process changes, perceived production pressures, lack of questioning attitude by workers and management, and poor communications. In addition, the NRC identified concerns with the decisions made by NFS management, in both October and November 2009, to restart the uranium aluminum process lines without fully understanding the causes of the events and correcting the underlying problems. The review concluded that additional actions were needed to provide reasonable assurance that the facility could be operated safely.

On January 7, 2010, the NRC issued Confirmatory Action Letter 2-2010-001 in response to your letter dated December 30, 2009. Your letter contained additional actions (commitments) to ensure that the root causes of the October 13, 2009, process upset have been adequately evaluated and appropriate corrective actions have been implemented for all potentially affected processes before you resume operations of those processes. The NRC oversight of the implementation of NFS' commitments will include an inspection of the completed actions for each process as well as an NRC assessment of your corrective actions and recovery activities for adequacy. The NRC will provide results of those assessments, including prospective approvals to restart individual process lines, in writing when completed.

In accordance with 10 CFR 2.390 of the NRC's "Rules of Practice," a copy of this letter, and its enclosures not otherwise withheld from public disclosure will be made available electronically for public inspection in the NRC Public Document Room or from the NRC's document system (ADAMS), accessible from the NRC Web site at http://www.nrc.gov/reading-rm/adams.html.

Should you have any questions concerning this inspection, please contact us.

Sincerely,

/RA/

Luis A. Reyes
Regional Administrator

Docket No. 70-143
License No. SNM-124

Enclosures:
1. NRC Inspection Report No. 70-143/2009-011 w/Attachments
   Attachments:
   1. Supplemental Information
   2. Event Timeline
   3. Representative Picture of UAl Alloy Fines
   4. Picture of Damaged Off-Gas Piping
2. Augmented Inspection Team Charter dated October 22, 2009

cc w/encls: (See page 4)

cc w/encls:
Timothy Lindstrom
Vice President, Operations
Nuclear Fuel Services, Inc.
Electronic Mail Distribution

Mark Elliott
Director
Safety and Security Department
Nuclear Fuel Services, Inc.
Electronic Mail Distribution

Lawrence E. Nanney
Director
TN Dept. of Environment & Conservation
Electronic Mail Distribution

William D. Lewis
Mayor
Town of Erwin
211 N. Main Avenue
P.O. Box 59
Erwin, TN 37650

Gregg Lynch
Mayor
Unicoi County
P.O. Box 169
Erwin, TN 37650

Johnny Lynch
Mayor
Town of Unicoi
Unicoi, TN 37692

Distribution w/encls: (See page 5)

Distribution w/encls:
PUBLIC
J. Shea, RII
E. Cobey, RII
S. Vias, RII
G. Smith, RII
M. Crespo, RII
M. Chitty, RII
D. Dorman, NMSS
M. Tschlitz, NMSS
P. Habighorst, NMSS
K. Ramsey, NMSS
N. Baker, NMSS
nmed@inl.gov

X PUBLICLY AVAILABLE ☐ NON-PUBLICLY AVAILABLE ☐ SENSITIVE X NON-SENSITIVE
ADAMS: X Yes ACCESSION NUMBER:_____ X SUNSI REVIEW COMPLETE

OFFICE	RII:DFFI	RII:DFFI	RII:DRP	RII:DFFI	RII:DFFI	RI:DRS	RII:DFFI
SIGNATURE	GH 3/16/10	Via email 3/18/10	Via email 3/18/10	Via email 3/18/10	Via email 3/18/10	Via 3/12/10	Via Email
NAME	GHopper	SSubosits	TChandler	OLopez	LPitts	WSchmidt	MCrespo
DATE		3/12/10	3/12/10	3/12/10	3/12/10	3/12/10	3/12/10
E-MAIL COPY?	YES NO	YES NO	YES NO	YES NO	YES NO	YES NO	YES NO

OFFICE	RII:DFFI	RII:DFFI	RII:DFFI	RII:DFFI	RII:DFFI		
SIGNATURE			Via Email	SV 3/16/10	JWS 3/18/10		
NAME			GSmith	SVias	JShea		
DATE			3/12/10				
E-MAIL COPY?	YES NO	YES NO	YES NO	YES NO	YES NO	YES NO	YES NO

OFFICIAL RECORD COPY DOCUMENT NAME: S:\AIT NFS\FINAL\NFS IR 2009-011 (AIT REPORT).DOC

U.S. NUCLEAR REGULATORY COMMISSION

REGION II

AUGMENTED INSPECTION TEAM

Docket No.:	70-143
License No.:	SNM-124
Report No.:	70-143/2009-011
Licensee:	Nuclear Fuel Services Inc.
Location:	Erwin, Tennessee 37650
Dates:	October 19, 2009 through January 7, 2010
Inspectors:	G. Hopper, Chief, Reactor Projects Branch 7, Division of Reactor Projects (DRP) (Team Leader) L. Pitts, Fuel Facility Inspector, Division of Fuel Facility Inspection (DFFI) S. Subosits, Senior Resident Inspector, DFFI O. López, Fuel Facility Inspector, DFFI T. Chandler, Resident Inspector, Division of Reactor Projects W. Schmidt, Senior Reactor Analyst, DRS, Region I M. Crespo, Senior Fuel Facility Inspector, DFFI G. Smith, Senior Resident Inspector, DFFI
Approved by:	Joseph W. Shea, Director Division of Fuel Facility Inspection

Enclosure 1

EXECUTIVE SUMMARY

Nuclear Fuel Services
NRC Inspection Report No. 70-143/2009-011

The purpose of the Augmented Inspection Team was to inspect and assess the facts and circumstances surrounding the October 13, 2009 process upset at the Nuclear Fuel Services (NFS) facility that resulted in unexpected levels of heat and nitrogen compound gas (NOx) due to a chemical reaction during the dissolution of scrap material containing low levels of uranium in the BLEU Preperation Facility (BPF) uranium aluminum (UAl) process area.

On October 12, 2009, NFS finalized procedure changes to allow chemical processing of small particle of high-enriched uranium scrap material (fines) in the centrifuge bowl cleaning stations. The NFS laboratory had previously analyzed the fines to determine the procedure modifications necessary to process this material. On October 13, 2009, upon addition of nitric acid into the bowl cleaning station, the solution exhibited an unexpectedly high rate of an exothermic chemical reaction. The operator shut down the station recirculation pump and shut off the heaters. However, the solution continued to heat up, producing an excessive quantity of NOx. These gases triggered the NOx detectors at the air gap of the nitric acid knockout column which prompted an evacuation of the building. The heated gases also deformed a section of the wet off-gas piping system for the bowl cleaning station and the nitric acid knockout column. The team determined that immediate corrective actions taken by the licensee in response to the upset condition were adequate and in accordance with facility procedures, and were effective in ensuring the safety of the workers and the public. However, NFS management's initial decision to initiate system recovery actions on October 13, 2009, was not adequate because they had not developed a detailed evaluation, with an adequate technical basis and appropriate management review until the NRC questioned the licensee's basis for the planned actions. The team noted that NFS planned to initiate system recovery actions prior to understanding what actually caused the high reaction rate, and determining and addressing the root causes of the event to preclude additional and potentially related upsets. By October 15, 2009, NFS had developed a plan that was adequate to initiate system recovery actions, investigate the event, and develop corrective actions.

On October 13, 2009, NFS initially determined that no formal reporting notification was necessary and that this event as it occurred, did not meet the requirements for an emergency classification in accordance with NRC guidance and licensee procedures. However, laboratory analysis conducted after the event on similar Uranium aluminum fines revealed that the NOx generation for the fines was significantly higher than the previously analyzed NOx generation. The licensee determined that this higher NOx generation rate could have potentially resulted in a "high occupational consequence." As a result of this analysis, the licensee determined on October 19, 2009, at 1:30 p.m. that the Bowl Cleaning Station operation on October 13, 2009, represented an operating state that was different from analyzed in the integrated safety analysis (ISA) and that the performance criteria of Title 10 of the Code of Federal Regulations (10 CFR) Part 70.61 were not met based on the revised NOx generation rate. The licensee notified the NRC (EN 45446 at 5:00 p.m.) in accordance with 10 CFR 70 App. A(b)(1).

The actual safety significance of the Bowl Cleaning Station event was low since the upper NOx detector functioned as designed and alarmed following the vigorous reaction in Bowl Cleaning Station, and upon receipt of the alarm, personnel evacuated the area. The event had no actual

or potential safety significance to the public or the environment because the facility scrubber and ventilation systems operated properly throughout the duration of the upset preventing an excessive release of NOx gas outside the facility.

The team found that the change management process was not adequately implemented because of a lack of management oversight of the change management process, a lack of questioning attitude, perceived production pressure and poor communication. The team determined that adequate change management processes were in place prior to the October 13, 2009 event, and that, if used as written and intended, could have prevented the event. The licensee's procedures adequately dictated a process in which the appropriate management, technical, and safety staff would be engaged in the review of modifications to processes. The licensee failed to properly use four portions of its decision-making processes to implement the changes that led to the event: procedure change requests were improperly classified as urgent, management reviews failed to identify all the items affected by the change, technical reviews failed to identify the modification of the design basis, and safety reviews failed to identify the adverse affect the changes had on the Integrated Safety Analysis (ISA). Nuclear Fuel Services management was aware that this process change was being urgently implemented, due to an upcoming material control and accounting inventory, and did not reinforce an expectation for safety over production. This led to shortfalls in the following areas:

- The sample size of the lab testing was not adequate to justify the process changes that were implemented, the lab testing used to facilitate this process change was of a preliminary nature and was not formally planned or documented;

- The associated procedure changes were classified and processed as "urgent," but did not meet the licensee's requirements to be classified as "urgent;"

- The task safety analysis was inadequate for the known hazards, chemistry personnel recognized and documented the potential for vigorous chemical reactions when processing materials with large surface areas, but this information was not utilized by the personnel performing the process reviews; and

- Management review and oversight of the process change was inadequate to detect the failures of the technical and safety reviews.

The team also identified poor communications as a contributing cause for this event. Poor communications were evident as listed below.

- The process engineer's request for the chemist to develop a method for processing the fines material was of an informal nature and did not provide the chemist with the necessary information. Specifically, the chemist was unaware that these lab results would be used to change the uranium aluminum process to allow the processing of other types of fines material.

- The chemist verbally discussed the results of the lab testing at the BLEU Preparation Facility (BPF) Meeting on October 5, 2009. The requirements for processing this fines material were developed by the chemist and verbally presented. The chemist did not provide the appropriate limits for these results and it was not recognized that these results contradicted the previous documented lab testing information provided for processing fines.

- The safety and regulatory reviews for the final procedure change that allowed the processing of fines material in the Bowl Cleaning Station were completed by phone communication which resulted in the reviewers being unable to personally validate the information provided.

The team noted that management was directly involved in the informal, verbal communications that occurred prior to the event which contributed to the expediting of a procedure change with inadequate technical and safety reviews.

In addition, the team also determined that an inadequate 10 CFR 70.72 review was conducted for the procedure changes that led to the event. The team noted that these records, required by 10 CFR 70.72(f), did not provide an adequate written evaluation of the bases for the determination that the changes do not require prior NRC approval.

On November 30, 2009, NFS issued an internal memo authorizing the restart of the uranium aluminum process. NRC regional management became aware of the intention to restart and contacted NFS to determine the nature of NFS' completed and implemented corrective actions. As a result of these discussions, NFS discontinued restart activities to provide an opportunity for the NRC to inspect NFS' readiness for restart. The team arrived onsite December 3, 2009, to continue the inspection. The results of their review found that NFS' decision to restart the uranium aluminum process on November 30, 2009, was less than adequate because NFS did not have a rigorous technical basis and an appropriate management review to support a restart. The corrective actions taken by NFS did not address all the causal factors identified by the NRC inspection team and the NFS investigation efforts related to the upset condition.

- NFS' causal analysis for the October 13, 2009 process upset event was incomplete. It did not identify all of the performance issues, which led to the event (for example, lack of management oversight and lack of a questioning attitude) even though the licensee was aware of the existence of these additional factors.

- NFS' extent of condition review was incomplete because the condition was not evaluated in the Uranium-oxide process. The team determined that the Uranium-oxide process had input material variability, which rendered that process potentially vulnerable to the upset condition, and NFS should have included Uranium oxide in their extent of condition review.

- NFS' extent of cause review was less than adequate because it did not evaluate each of the root causes that NFS identified that contributed to the event.

- NFS' identified corrective actions were insufficient to ensure that all causal factors for the event were adequately addressed prior to restart of the uranium aluminum process.

- NFS did not appropriately resolve all issues identified during the extent of condition review. Specifically, a question related to item relied on for safety (IROFS) BUA-43 was raised which called into question the functionality of BUA-43, but it was not adequately addressed prior to NFS' restart decision.

- Nuclear Fuel Services' ISA was not adequate to meet the performance requirements in 10 CFR 70.61, in that, a high consequence accident scenario (NOx generation in the uranium aluminum process) did not have a sufficient number of IROFS identified and implemented. In addition, NFS did not identify IROFS for several accident scenarios in fuel manufacturing, Uranium-oxide, uranium aluminum, and the Commercial Development Line processes involving NOx generation that required IROFS to meet the performance criteria.

REPORT DETAILS

BACKGROUND:

The NFS facility is located on a 5-acre site in Erwin, Tennessee, which is in Unicoi County. The licensee's principle activity is the fabrication of nuclear fuel with high enriched uranium and scrap recovery processes. The facility contains several production processes including the Blended Low Enriched Uranium Preparation Facility (BPF) in which chemical processing recovers low levels of uranium from scrap material from Department of Energy (DOE) projects.

Within the BPF, a chemical dissolution process had been used to process ingots of scrap in the uranium aluminum (UAl) process area. NFS desired to chemically process fines scrap material (very small particles of UAl) in the uranium aluminum centrifuge bowl cleaning station (BCS), which was a change to the processing of ingots. The BCS is part of a three stage process for uranium recovery from scrap material. The first stage consists of UAl dissolvers in which uranium containing materials are sprayed with caustic solution until dissolved. In the second stage, the uranium material is separated from the caustic solution in a centrifuge. Stage three uses the BCS to remove the uranium from the centrifuge bowls. Nitric acid is pumped through the centrifuge bowls and recirculated until the residue is dissolved.

Bowl Cleaning Station #2

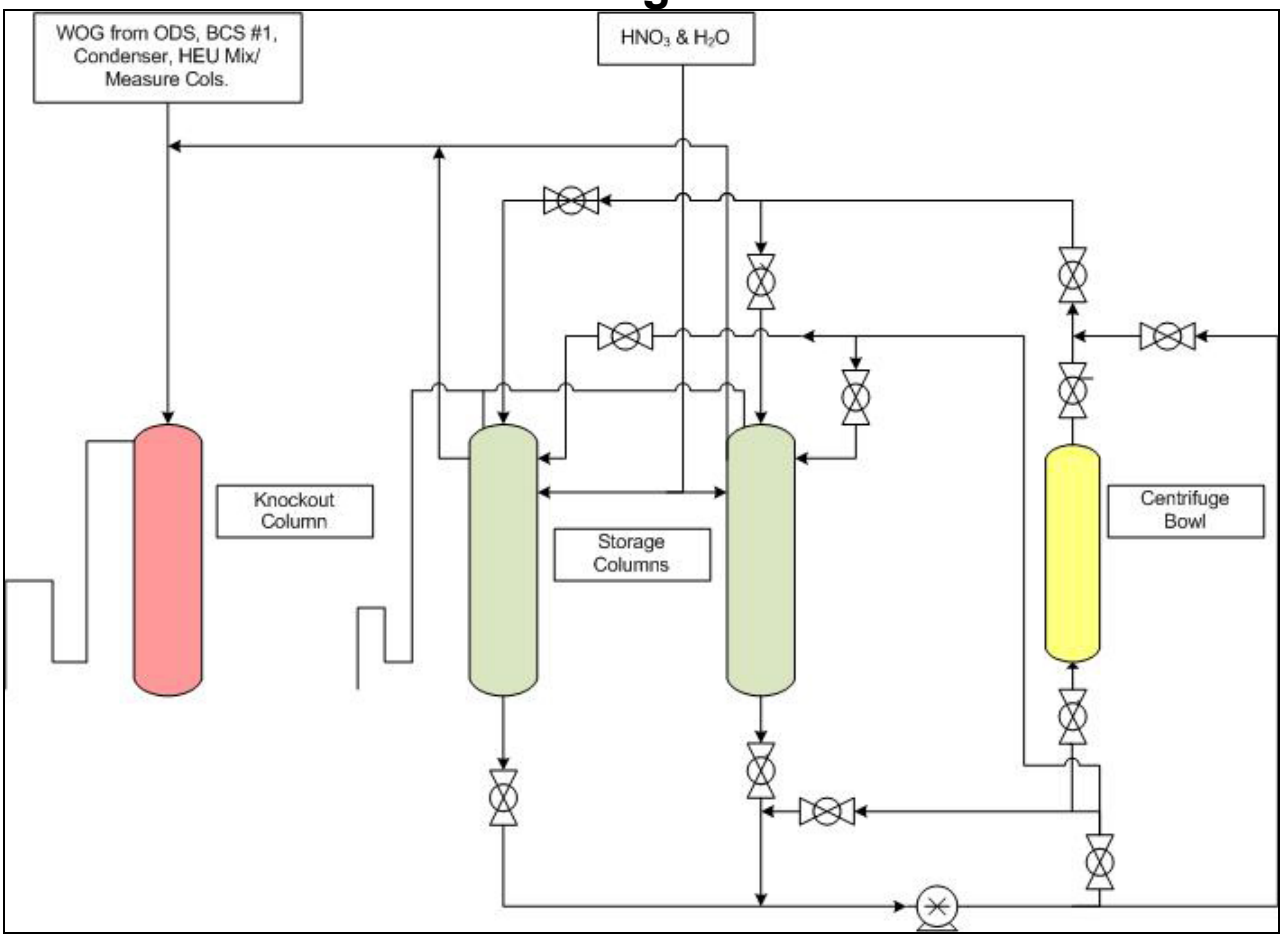

This chemical process is exothermic and has historically produced nitrogen oxide compounds (NOx) which are normally captured and processed by the wet off-gas (WOG) system. Safety Controls designated as IROFS include a NOx detection system with sensors at the employee working level and at the ceiling close to the knock out column's siphon break which is a potential release point for these gases.

On October 12, 2009, NFS finalized its procedures for chemical processing of UAl fines scrap material in the centrifuge BCS. A representative picture of this material is included as Attachment 3. The NFS laboratory had analyzed a sample of fines to determine the procedure modifications that were necessary to process this material. The decision was made to process the fines in the BCS using nitric acid because laboratory testing indicated that dissolving the fines with caustic in the normal dissolver column was not recommended due to the potential for a vigorous reaction. The nitric acid dissolution of the first batch of material (performed in BCS 2) did not proceed according to expectations.

On October 13, 2009, NFS began using the BCS system to dissolve UAl fines. The fines were loaded into strainer baskets and placed directly into the bowls to be dissolved with nitric acid. After the dissolution process began, the operator noticed that the temperature of the system was increasing and that NOx (in the form of a brown cloud) was beginning to form inside the BCS storage columns. The heaters were shutdown and the pump was jogged to control pressure. The upper NOx detector alarmed at approximately 20 minutes into the event, and the building was evacuated with complete accountability of all personnel. Immediate actions included remote monitoring of NOx levels in the BPF. Additionally, the building, and health and safety personnel re-entered the BPF in Self Contained Breathing equipment to validate shutdown conditions. The NOx levels inside the building were not significant, based on re-entry data and remote NOx detector readings. An additional outcome of the event was the deformation of a section of the off gas piping due to the excessive heat generated by the chemical reaction.

INSPECTION SCOPE:

The purpose of the augmented inspection was to inspect and assess the facts and circumstances surrounding the October 13, 2009 event at the NFS facility that resulted in unexpected levels of heat and nitrogen compound gas generation during the dissolution of fines scrap material. The objectives of the inspection were to: 1) evaluate the licensee's decision-making process regarding equipment and procedure modifications that occurred prior to the October 13, 2009 upset; 2) evaluate the licensee's decision-making process regarding the response and investigation of the upset; and 3) evaluate the licensee's basis for immediate and long term corrective actions to prevent recurrence. The inspection included a review of procedures, procedural implementation, change management and operational decision making to determine if the facility was operated safely and in compliance with its license. Areas examined during the inspection are identified in each charter item listed below. Within these areas, the inspection consisted of a selective examination of procedures and records, interviews with personnel, and observation of activities being performed by NFS' staff following the event.

CHARTER ITEMS:

1. Develop a complete sequence of events related to this operational upset.

Through interviews of licensee personnel and review of licensee records, the team developed a sequence of events associated with the event at the bowl cleaning station in the BPF. The sequence of events is included in this report as Attachment 2.

2. Evaluate the licensee's use of its decision-making process involved in any equipment or procedural modifications and associated evaluations that were performed prior to the processing of the fines/scrap material.

The team evaluated the licensee's use of its decision making process involved in procedure modifications and associated evaluations prior to the processing of the fines/scrap material. The team interviewed numerous individuals involved in the licensee's decision to process the metal-oxide fines/scrap material. Personnel interviewed included the process engineer, the process chemist, the engineering supervisor, various operations managers and supervisors, the project engineering manager, and several ISA reviewers. The team also reviewed the system operating procedures, the laboratory procedures, and the ISA. In addition, the team evaluation included a review of procedures NFS-CM-004, "NFS Change Control Process" and NFS–GH-901, "Configuration Management Program." These two procedures constituted the tools in which the licensee implemented its decision-making process to authorize the processing of the fines/scrap material. Following the evaluation of the procedures, the team concluded that the procedures adequately dictated a process in which the appropriate management, technical, and safety staff would be engaged in the review of modifications to the process.

Procedure NFS-CM-004 dictated the process steps to initiate changes, which begins with an enterprise change request (ECR). The team noted that ECRs 20092008 and 20091919 (which authorized the procedure changes that allowed the processing of the fines material) were implemented and approved. However, the team noted that they were both improperly classified as urgent. Section 2.0 of Procedure NFS-CM-004 stated that only those ECRs addressing "failures which are adversely impacting personnel safety or significantly impacting operations may be assigned a priority of urgent." The team determined that the purpose of the ECRs (which was to implement a method to process fines material) did not stem from an operational or safety failure and therefore should not have been classified as urgent. Based on interviews with NFS management, the team determined that it was a common practice for process engineers to classify ECRs as urgent. The Change Control Board (CCB) review represents management's review of ECRs. Urgent ECRs can be "expedited" and potentially by-pass the CCB review until after the change is implemented. Therefore, changes could be implemented more quickly. While both ECRs were classified as urgent, ECR 20092008 by-passed the CCB review prior to its implementation. The licensee's failure to properly classify ECRs was identified as an Unresolved Item (URI) 70-143/2009-011-01, Failure to properly classify ECRs. This item will require additional NRC review and evaluation in a subsequent inspection.

Procedure NFS-CM-004 Section 3.13 stated, in part, that the CCB was to review non-urgent ECRs in accordance with NFS-CM-005, "NFS Change Control Board Charter." This procedure stated that the CCB was to evaluate ECRs according to eight criteria. Item three of the criteria stated that the CCB would review the impact of the change on the facility systems, process, activities and Facility Configuration Information (specifically, "if design requirements and/or design basis are/were affected"). The CCB's review of ECR 20091919, which authorized the

processing of fines directly to the BCS, failed to identify that the design requirements and design basis were affected by the direct addition of fines into the BCS without first processing the material in the UAl dissolvers. In addition, item eight of the criteria stated that CCB would review urgent, expedited changes to ensure that items affected by the change had been identified and addressed. The CCB's review of ECRs 20091919 and 20092008 failed to identify that the process change was not bounded by the ISA and properly addressed [details regarding the ISA deficiencies are discussed in charter item 9]. The CCB's failure to identify the deficiencies in the ECRs that led to the event was identified as URI 70-143/2009-011-02, Failure of the CCB reviews. This item will require additional NRC review and evaluation in a subsequent inspection.

Once the ECRs were authorized, the licensee was to conduct technical and safety reviews prior to implementation of the changes. The team noted that the technical reviews performed for the procedure changes related to the processing of the fines material (Standard Operating Procedure (SOP) 409 Section 27, "Centrifuge Bowl Cleanout Process," Revision (Rev.) 15 and SOP 409 Section 10, "Uranium Aluminum Dissolution," Revs.26 and 27) did not meet the established criteria in procedure NFS-GH-901. Section 5.3.1 of Procedure NFS-GH-901 stated that "the technical review is focused on assuring that the design basis is preserved, and any changes are assessed and determined to be acceptable." The technical reviews failed to identify that processing UAl fines directly in the UAl BCS, without processing the material through the caustic dissolution and centrifuge steps, was not analyzed in the ISA as a part of the UAl design basis. In addition, the only material form evaluated in the ISA was UAl ingots. The processing of very small UAl fines was not analyzed in the ISA. Furthermore, the original laboratory analysis (HEU-11-02-02, Final Report: Dissolution of UAl Floor Sweepings and Dross, Rev. 0) warned not to process the UAl fines due to vigorous reactions, and this fact was overlooked in the technical reviews. The failure of the technical reviews to focus on assuring that ERCs 20091919 and 20092008 would preserve the design basis or that any changes were assessed and determined to be acceptable was identified as URI 70-143/2009-011-03, Failure to perform adequate technical reviews. This item will require additional NRC review and evaluation in a subsequent inspection.

The team noted that the safety reviews performed for the ECRs related to the processing of the fines material did not meet the established criteria in procedure NFS-GH-901. Section 5.3.2 of Procedure NFS-GH-901 stated that the safety reviews assure that the facility ISA is not adversely affected by the change, operational safety is not compromised, and that assumptions and commitments are maintained. The ECRs involved procedure changes to increase the nitric acid concentration used in the BCS and allow an additional input material, UAl fines, as opposed to centrifuge residue. The safety reviews only considered the consequences of increasing the nitric acid concentration on the accident sequence involving a spill of liquid nitric acid. The safety reviews failed to consider the impact on NOx generation rates due to the greater surface area of the UAl fines and failed to note that direct input of material into the BCS inherently adversely affects the ISA as the ISA assumed only material first processed in caustic dissolution is placed in the BCS. As a result, the ISA assumptions related to the rate of NOx generation during UAl BCS process were exceeded during the upset condition. The failure to assure that the facility ISA was not adversely affected by the change, operational safety was not compromised, and that assumptions and commitments were maintained was identified as URI 70-143/2009-011-04, Failure to perform adequate safety reviews. This item will require additional NRC review and evaluation in a subsequent inspection..

Conclusion

The team assessed that adequate change management processes were in place prior to the October 13 event, and if used as written and intended, could have prevented the event. The licensee's procedures adequately dictated a process in which the appropriate management, technical, and safety staff would be engaged in the review of modifications to processes. The licensee failed to properly use four portions of its decision-making processes to implement the changes that led to the event: 1) ECRs were improperly classified as urgent; 2) CCB reviews failed to identify all the items affected by the change; 3) technical reviews failed to identify the modification of the design basis; and 4) safety reviews failed to identify the adverse affect the changes had on the ISA.

3. Identify and evaluate the effectiveness of the immediate corrective actions taken by the licensee in response to the upset, including the decision-making process used to determine response and recovery activities.

The team identified and evaluated the effectiveness of the immediate corrective actions that the licensee took in response to the upset condition and the decisions made during the response and immediate recovery activities. The team reviewed documentation, including logs, operating procedures, work orders and associated condition reports, and interviewed licensee facility operators and engineers.

The team performed an independent review of the licensee's response to NOx alarms as required by SOP 409, Section 1, Rev. 24, "General Requirements for BLEU Preparation and Associated Facilities" and SOP 409, Section 27, "Centrifuge Bowl Cleanout Process." In addition, the team reviewed these procedures to ensure that they were adequate to protect the workers during a NOx release.

When the high reaction rate was observed, operators jogged (cycled on and off) the recirculation pump and cycled valves to relieve potential overpressure because they thought that the centrifuge bowl was obstructed with solids. This action was performed in accordance with SOP 406, Section 27, step 8.2B, "Abnormal Operation Responses – Unclogging of Solids." The operators also implemented procedure SOP 409, Section 27, "Centrifuge Bowl Cleanout Process," step 8.1.3B, High Temperature Condition. This procedure provided actions to safely shut down the heaters to stop the increasing temperature noted by the operators. The licensee also implemented procedure SOP 409, Section 1, Rev. 24, "General Requirements for BLEU Preparation and Associated Facilities." This procedure provided steps to respond to an activation of the NOx detection system, which is credited in the ISA as IROFS BPF-43. The procedural response included evacuation of the process area upon receipt of the NOx alarm and monitoring of the NOx levels on the remote indicators. The Safety Department was notified of the NOx alarm and the personnel evacuation. The licensee reentered the affected process area wearing the appropriate personnel protective equipment and roped off the process area, monitored NOx levels, collected high volume air samples for NOx measurement, verified the ventilation and scrubber systems were operating properly, shut down process equipment, and restricted access to the affected process areas. Specific times and actions are included in the timeline (Attachment 2).

The team concluded that the licensee's response to the NOx release was in accordance with SOP 409 and that SOP 409 provided adequate steps to respond to the NOx alarms and upset conditions.

The team also evaluated the licensee's decision-making process to determine response and recovery activities. Following the upset condition, NFS entered the upset condition in their corrective action program (PIRC 21448) on the evening of October 14, 2009, and assigned a small root cause team to investigate the upset (Investigation 10025). In addition, the licensee developed a recovery plan that focused on taking samples of the material involved in the upset to aid in the determination of what led to the increased reaction rate and development of a path for processing this material; restarting process areas serviced by the nitric acid knock out column, and dissolution of previously loaded material in the caustic dissolution process (serviced by a different wet off gas system) to allow the system to be thoroughly rinsed prior to shutdown. NFS planned to isolate the BCSs from the knock out column and inspected the associated WOG piping to support the restart of the oxide dissolution process and associated column systems. NFS also planned to finish the dissolution of previously loaded material in the caustic dissolution system to avoid potential safety issues due to solidification of the material in the process equipment. NFS staff transmitted this plan, which had not been approved by senior management, to the NRC the day after the event. This plan did not contain a deliberate and planned process to address how and why the event occurred. The NRC assessed this plan as reflecting their desire to operate the UAl process following the event, although without a clear understanding of the cause of the event and/or extent of condition.

The team noted that NFS did not have a written technical basis supporting the recovery plan to ensure that the implementation of the plan would not cause an additional upset condition. The team noted that the licensee planned to initiate system recovery actions prior to fully understanding what actually caused the high reaction rate and determining and addressing the root causes of the event to preclude additional and potentially related upsets.

Subsequent to NRC questions, on October 15, 2009, NFS developed an operational decision making issue (ODMI) to further explain the recovery plan from the upset. The ODMI was developed in accordance with Procedure NFS-GH-946, "Operational Decision Making." This procedure provided a framework to systematically and rigorously evaluate facility conditions that could impact safety, result in an impact to others process areas, cause equipment damage, or place personnel safety at risk. The ODMI included the following objectives:

- Established the criteria for proper isolation and handling of systems connected to the acid WOG and affected knock out column to prevent further events that may challenge the safety basis.

- Established a plan to safely sample and characterize the material involved in the upset.

- Establish the investigatory process that will be used to determine how the processing methodology and parameters for the suspect material were developed.

- Established the basis for allowing resumption of operations in BPF areas where the process methodologies were well understood and involved homogeneous well-characterized input materials.

- Established the process to develop the criteria, additional requirements, and conditions under which BPF operations may resume in the UAl and bowl cleaning areas.

The team assessed the ODMI and found it to be adequate. The final decision making-process used by the licensee to investigate and develop corrective actions ensured that the reason for the upset condition was well understood and an action plan, including a root cause analysis, was planned and developed.

Conclusion

The team determined that immediate corrective actions taken by the licensee in response to upset condition were adequate and in accordance with facility procedures, and were effective in ensuring the safety of the workers and the public. However, NFS' initial decision to initiate system recovery actions on October 13, 2009, was not appropriate because they had not developed a detailed evaluation, with an adequate technical basis and appropriate management review until NRC questioned the basis for the planned actions. By October 15, 2009, NFS had developed a plan that was adequate to initiate system recovery actions, investigate the event and develop corrective actions.

4. Independently assess the adequacy of the licensee's decision making involved in (a) any equipment or procedural modifications and associated evaluations that were performed prior to the processing of the fines/scrap material, (b) response during the event, and (c) recovery and process restart planning.

Part (a)

The team assessed the adequacy of the licensee's decision making involved in procedure modifications and associated evaluations prior to the processing of the fines/scrap material. As discussed in Charter Item number 2, the team identified that the licensee failed to properly implement four portions of its decision making processes: 1) ECRs were improperly classified as urgent; 2) CCB reviews failed to identify items affected by the change; 3) technical reviews failed to identify the modification of the design basis; and 4) safety reviews failed to identify the adverse affect the changes had on the ISA.

The team concluded that because of perceived urgency to maintain the production schedule, the decision was made to classify the ECRs as "urgent." The classification of urgent allowed one of the ECRs to bypass the CCB. The team identified that the failures of these reviews represented opportunities by management to identify weakness in the reviews that occurred which may have prevented the event.

When management decided to evaluate the feasibility of processing waste materials that could potentially contain high concentrations of fines, the laboratory department was tasked to develop a workable solution. The team determined that the chemists were not given the proper context as to how the results of their analysis would be used, and therefore, the previous lab report that had identified the possible negative consequences of processing fines were not emphasized. The chemists had identified early on in their laboratory analysis that the reaction rates associated with the fines (due to their large surface area) were high and thus, difficult to control. The chemists did not question the fact that the fines material provided to them for testing contained high concentrations of graphite (which has a very low reaction rate) and low concentrations of metal-oxide fines (which has a very high reaction rate). When the chemist had obtained preliminary results from the new laboratory work, the results were verbally provided to management and did not communicate the potential negative consequences of processing material with high concentrations of metal-oxide fines. In addition, the chemist had

conducted the new laboratory work on a single non-representative sample using the original test plan as authorization. A peer review (which would have been conducted with a new test plan) may have identified these weaknesses. When the preliminary information was provided in a meeting with management, management decided to proceed with the modifications based only on the verbal results of the tests. In addition, the team determined that the communications between the process engineer and his direct supervisor were inadequate. The engineering supervisor had little involvement with the proposed procedure changes, and as a result, his input was absent. This observation, along with the use of preliminary laboratory results by management, demonstrated to the team a lack of management involvement and oversight, specifically of direct report activities. The lack of management involvement and oversight contributed to the failure of the technical reviews to identify that processing fines directly in the BCS, without processing the material through the caustic dissolution and centrifuge steps, inherently altered the UAl process beyond that of the ISA. The team determined that the decisions from the technical reviews were based on incorrect assumptions regarding the changes proposed and resulted in the decisions to proceed with the operations that resulted in the event.

The information collected by the team indicated that the safety reviews of the ECRs were processed without consideration given as to how the high surface area of the fines could affect the rate of dissolution (and thus NOx generation) at the BCS. In addition, the team noted that safety approvals for ECR 20092008, which was initiated to address a procedural inconsistency that ECR 20091919 failed to catch, were conducted after hours over the phone to expedite the processing of this change request to continue production with little to no questioning attitude. The team determined that the decisions from the safety reviews were also based on incorrect assumptions regarding the changes proposed and resulted in the decisions to proceed with the operations that resulted in the event.

The team also determined that an inadequate 10 CFR 70.72 review was conducted based on reviews of the Safety and Regulatory Review Routing Forms used for the ECRs that led to the event. The team concluded that these records, required by 10 CFR 70.72(f), did not provide an adequate written evaluation of the bases for the determination that the changes do not require prior NRC approval. Therefore, the failure to have a written evaluation that provided the bases for the determination that the changes did not require prior NRC approval was identified as URI 70-143/2009-011-05, Failure to properly implement 10 CFR 70.72. This item will require additional NRC review and evaluation in a subsequent inspection report.

Part (b)

The team assessed the adequacy of the licensee's decision making process involved in the event response. The team determined that the decisions made during the immediate corrective actions taken by the licensee in response to upset condition were adequate and in accordance with facility procedures. For details regarding the event response see charter item 3.

Part (c)

The team assessed the adequacy of the licensee's decision making process involved in recovery and process restart planning. NFS' initial decision to initiate system recovery actions on October 13, 2009, lacked a detailed evaluation, with an adequate technical basis, and appropriate management review until the NRC questioned the basis for the planned actions. NFS staff transmitted to the NRC a restart plan the day after the event which did not address a

deliberate and planned process to address how and why the event occurred. The NRC perceived this plan as an immediate desire to operate the UAl process following the event without a clear understanding of the cause of the event and/or extent of condition.

Further discussions within NRC and NFS resulted in NFS implementing Procedure NFS-GH-946, “Operational Decision Making.” On October 15, 2009, NFS developed an ODMI to further explain the recovery plan from the upset. The ODMI outlined a process to safely reconfigure the system, investigate the event and plan restart activities. A small root cause team investigation was also assigned to ensure that the reason for the upset condition was well understood and an action plan could be developed with corrective actions to ensure the safe restart of plant operations and prevent similar type of events. The adequacy of the root cause analysis and corrective actions are discussed in charter items 7 and 11.

The final decision making-process used by the licensee to plan investigation and corrective actions resulted in addressing appropriate safety precautions to ensure that the reason for the upset condition was well understood and an action plan, including a root cause analysis, was planned and developed.

Following discussions with the NRC, NFS decided to upgrade the root cause investigation to a full root cause team investigation on October 22, 2009. The licensee continued through the month of November working on the root cause investigation and, development and implementation of corrective actions.

On November 30, 2009, NFS issued a memo authorizing the restart of the uranium aluminum process. NRC management became aware of the intention to restart and contacted the licensee to determine the nature of their implemented corrective actions. Further discussions with the NRC revealed that no new material had been processed in the system and some restart preparation activities had commenced such as rinsing of the system. As a result of these discussions with the NRC, the licensee discontinued restart activities to provide an opportunity for the NRC to inspect the readiness of the licensee and the UAl system for restart. The team arrived onsite December 3, 2009, to continue the inspection.

The team determined that NFS had implemented the ODMI objectives. However, the team noted that corrective actions taken by NFS did not address all the causal factors related to the upset condition. NFS had not performed an extent of cause review for every root cause identified in their root cause evaluation. In addition, the team had performed an independent root cause evaluation of the event and had identified the root causes as a lack of management oversight of the change management process and a lack of questioning attitude by NFS staff. The team presented the preliminary results of their root cause evaluation. However, NFS did not implement corrective actions to address these issues before making the decision to restart the UAl process.

The team also identified concerns with the technical basis of one of the two credited IROFS to mitigate NOx exposures from the UAl process. One of the two IROFS (BUA-43) is a chemical addition process, designed to limit UO_2 production (which limits NOx production). The technical basis for this IROFS was not adequately justified. The team noted that NFS had also identified a similar issue with IROFS BUA-43 during the extent of condition review. NFS identified a corrective action to develop a formal engineering basis for the use of IROFS BUA-43 and assigned a priority of “low” in their corrective action program. This priority was not appropriate

given that the licensee had intended to restart the UAl process and was aware that the technical basis for the IROFS was not well developed. The team determined that NFS demonstrated a lack of questioning attitude regarding the effectiveness of IROFS BUA-43.

The team determined that NFS' decision made on November 30, 2009, to restart the UAl process lacked a rigorous technical basis and appropriate management review. The corrective actions taken by NFS did not address all the causal factors related to the upset condition. NFS did not perform an extent of cause review for every root cause identified in their root cause evaluation. Additionally, NFS had intended to restart the UAl process without resolving an issue with an IROFS that had been identified as having an inadequate engineering basis.

Conclusion

The licensee's decision making during the implementation of the change management process was less than adequate and resulted in improper decisions that resulted in the event. In addition, the licensee failed to implement the requirements for 10 CFR 70.72.

The team determined that the decisions made during the immediate corrective actions taken by the licensee in response to upset condition were adequate and in accordance with facility procedures. However, NFS' initial decision to initiate system recovery actions on October 13, 2009, was less than adequate because they had not developed a detailed evaluation, with an adequate technical basis and appropriate management review until NRC questioned the basis for the planned actions.

The team determined that NFS' decision on November 30, 2009, to restart the uranium aluminum process was less than adequate because they did not have a rigorous technical basis and appropriate management review to support a restart. The corrective actions taken by NFS did not address all the causal factors identified by the inspection and investigation efforts related to the upset condition. NFS did not perform an extent of cause review for every root cause identified in their root cause evaluation. Additionally, they had intended to restart the UAl process without resolving an issue with an IROFS that had been identified as having an inadequate engineering basis.

5. Evaluate the licensee's implementation of the facility emergency plan and associated procedures for this event.

The team performed an independent review to determine if this event met the criteria for an emergency classification. The team reviewed NUREG-0728, the licensee's Emergency Action Levels (EALs) as described in procedure NFS-HS-E-03, Attachment C and applied the EAL to procedure NFS-GH-903 (Emergency Plan). The evaluation of the licensee's emergency response included a review of the NRC Incident Response Plan, licensee's activities leading up to the event, a review of the licensee emergency response procedures, implementation of Emergency Plan and notification guidance, and interviews of licensee staff directly involved in the initial and follow-up event response activities.

The process evolution that resulted in this event commenced at approximately 4:15 a.m. on October 13, 2009. Within a few minutes of commencing the bowl cleaning operation, a vigorous reaction started and operators noted a large amount of NOx generation visibly greater than expected. The affected process area is provided with two NOx detectors, the upper NOx detector is located above the process area and the lower NOx detector is located in the worker breathing zone. The first NOx alarm was received at time 0435. All NOx alarms received were from the upper NOx detector and at no time during this event were any NOx alarms received in the worker breathing zone.

Upon receipt of the NOx alarm, all plant personnel evacuated the area and personnel accountability was completed. Upon exit from the area, personnel monitored NOx levels on the remote indicators. The Safety Director was notified of the NOx alarm and the personnel evacuation. The Plant Superintendent and the operations staff performed actions to rope off the process area, monitor NOx levels, collect high volume samples for NOx, verified the ventilation and scrubber systems were operating properly, and restricted access to the affected process areas.

The Emergency Preparedness Manager referenced procedure NFS-HS-E-03 attachment C to determine if the event required activation, the following areas were evaluated:

- Criticality
- Radiological Release
- Fire
- Natural Phenomena
- Security
- Chemical Toxicity

No activation was required by the procedure.

Conclusion

This event did not meet the requirements for an emergency classification in accordance with NRC guidance and licensee procedures. The licensee properly evaluated the emergency classification for this process upset. The licensee's emergency preparedness decision making process for this process upset evaluated the appropriate areas and displayed a focus on protection of workers, the public and the environment.

6. Determine the adequacy of internal and external licensee upset reporting decisions.

The team reviewed the licensee's activities leading up to the event, the licensee's emergency response procedures, and their reporting requirements. The team also interviewed licensee staff directly involved in the initial and follow-up event response activities.

The team noted that upon receipt of the NOx alarm, all plant personnel evacuated the area and monitored the NOx levels on the remote indicators in accordance with procedures. Immediate internal communications included notification of building supervision and the Safety Director that a NOx alarm had resulted in personnel evacuation. The Plant Superintendent and the operations staff performed actions to rope off the process area, monitor NOx levels, collect air samples for NOx, verified the ventilation and scrubber systems were operating properly, and restricted access to the affected process areas. The senior resident inspector was notified by

phone shortly after the event. The event was entered into the Problem Identification, Resolution, and Correction System (PIRCS) that morning, and discussed at the daily BPF operations and the daily senior management problem screening meeting.

All NOx alarms received during the upset were from the upper NOx detector and at no time during this event were any NOx alarms received in the worker breathing zone. Therefore, workers were not exposed to the hazardous levels of NOx gas. The licensee reported that the highest reading NOx concentration was 28.5 parts per million (ppm) for a short period of time in the upper NOx detector, and the highest reading from the air sampler was around 10-13 ppm at ceiling level.

The ISA for the UAl BCS analyzed the release of abnormally high NOx gas concentration into the process area. The chemical consequence evaluation supporting the original ISA determined that chemical exposure to the worker could result in a credible intermediate consequence event. The chemical occupational consequences were based on the following average room concentration criteria as approved in NFS ISA methodology:

- Intermediate Consequence ≥ 12 ppm
- High Consequence ≥ 20 ppm

The licensee performed a post event laboratory analysis on similar UAl fines material in response to the observed initial high NOx levels during the upset. The laboratory analysis revealed that the material reaction rate was similar to that which was observed during the upset condition. The licensee determined that the NOx generation for the fines was significantly higher than the previously analyzed NOx generation for the UAl ingots. The new chemical consequence evaluation for the UAl BCS, using the generation rate for the fines, determined that the NOx generation rate could result in a credible high consequence event to the worker.

The licensee determined on October 19, 2009, at 1:30 p.m., that insufficient IROFS were in place for the BCS as a result of this analysis, and that the performance criteria of 10 CFR 70.61 were not met based on the revised NOx generation rate. The licensee notified the NRC in a timely manner (EN 45446 at 1700) in accordance with 10 CFR Part 70 Appendix A(b)(1) – Any event or condition that results in the facility being in a state that was not analyzed, was improperly analyzed, or is different from that analyzed in the Integrated Safety Analysis, and which results in failure to meet the performance requirements of 10 CFR 70.61. This is a 24 hour reporting requirement. This item is further discussed in the discussion of ISAs in charter item number 9.

Conclusion

The team concluded that licensee's decisions related to internal and external reporting requirements were performed with reasonable timeliness and in accordance with the applicable procedures and regulations.

7. <u>Evaluate the licensee's root cause analysis and determine if the licensee's review adequately identified the factors that led to the upset. Evaluate the licensee's extent of condition and extent of cause analyses.</u>

The team reviewed the licensee's root cause evaluation report and interviewed licensee personnel. In addition, the team reviewed the licensee's reports associated with their extent of condition and extent of cause reviews.

Following the unexpected excessive generation of NOx and heat in BCS 2 on October 13, 2009, the licensee documented the event in their PIRCS as #P21448 - Investigation ID# 10025. In this report, the licensee documented the decision to perform a small team root cause investigation. Based on laboratory testing of the UAl fines material and subsequent revision of the chemical accident consequence evaluation, the licensee's staff determined that the process upset was a result of an event that was outside of the bounds of the ISA. Following notification (Event No. 45446) of the condition and discussion with NRC, the licensee assigned a full team root cause investigation on October 22, 2009. The licensee's team was comprised of four individuals from the licensee's staff and one from the B&W Nuclear Operations Group – Lynchburg site, to review PIRCS# P21448-I10059. The team found that each of the licensee's Root Cause Analysis (RCA) team members had formal training in the chosen RCA methodology and an appropriate level of experience in RCA and incident investigations. The team also concluded that licensee management provided the RCA team with the necessary time and resources to complete the RCA.

The RCA team focused their efforts on gathering technical and operational details leading up to the event by interviewing licensee managers and staff from the operations, safety, engineering and laboratory organizations and reviewing pertinent procedures and change management documentation. The results of the RCA team's efforts were the generation of a narrative report, a chronological timeline, and identification of causal factors, contributing causes, root causes, and lessons learned. The report also proposed corrective actions to address the root and contributing causes to prevent recurrence of a similar event. The team concluded that the techniques and application of the RCA methodology used by the licensee's RCA team were consistent with the investigative practices and RCA methods. However, the team noted that the RCA methodology, as utilized by the licensee, did not rigorously address management oversight issues.

The licensee's RCA determined that there were three causal factors that were relevant to the event: (1) the licensee failed to implement plant-wide a change management procedure (NFS-TS-009, Rev. 0), originally issued in 2007, for changes which could modify or impact chemical processes; (2) the ISA team leader incorrectly concluded the process change, which allowed the processing of the UAl fines and floor sweepings, was bounded by the ISA and did not require a review of the process change by the ISA Chemical Analyst; and (3) the documented technical basis for the process change did not adequately describe the fundamental change to the UAl Bowl cleaning station process. The team concluded that the specific causal factors identified in the licensee's RCA were relevant and contributed to the BCS 2 event.

The team concluded that none of the above three causal factors focused on the lack of management oversight or the lack of questioning attitude that was demonstrated by the licensee's staff and management throughout the implementation of the site's change management process. The lack of management oversight allowed the change process to be completed without proper completion of documentation and with inadequate communication

between site management, engineering personnel, chemistry personnel and the licensee staff assigned to perform the technical and safety reviews. The lack of a questioning attitude resulted in completion of technical and safety reviews, without the reviewers adequately understanding the process change that they were approving, or questioning the lack of a detailed technical basis for the change. Based on review of the RCA and discussions with licensee management and staff, the team concluded that the RCA team recognized the lack of management oversight and lack of questioning attitude which contributed to the event, but did not document or fully evaluate these factors during the investigation.

The licensee's RCA proposed several corrective actions to help prevent the recurrence of a similar event. The team reviewed the corrective actions and determined that the basis of each corrective action was adequately supported by the RCA team's findings. The RCA corrective actions focused on actions to increase the procedural requirements for management of chemical process changes, reinforce the importance of the change management process, and increase the effectiveness of the corrective action program. The team noted that the corrective actions in the RCA only partially address the lack of management oversight and a lack of questioning attitude issues. The team's assessment of the licensee's corrective actions is detailed in charter item 11.

The team performed a review of the licensee's extent of condition which was captured in PIRCS # P21448-I10073. The team noted that the licensee performed a "vertical slice" review of four process systems located within the facility. The methodology for choosing the analyzed systems was based on the exclusion of systems that exhibited few changes within the recent past, systems that did not process a significant amount of material, as well as systems with low safety risk. The licensee required the selected systems to include at least one system from one of the three major operating areas, i.e. BPF, Fuel Manufacturing Facility (FMF), and the Commercial Development Line (CDL). The licensee determined that the following systems would be analyzed by a multi-disciplinary team: FMF Recovery Area E, CDL Heel Removal system, CDL Column/Tray Dissolvers, and the BPF Uranium-Aluminum system. The four areas were selected because they met one or more of the following criteria: 1) operations with changes in feed inputs; 2) operations with changes that are approved but not yet implemented or operated; 3) areas that have a significant number of changes to process/equipment or areas with operational/equipment issues; and 4) areas with a wide variety of inputs. The licensee's goal was to review the various safety documents and verify the safety basis of the system. The licensee's review team performed vertical slice type reviews for process operating procedures, drawings, and Safety Related Equipment (SRE)/IROFS versus accident scenarios documented in the ISA. Issues identified during the reviews were entered into the licensee's corrective action system.

As a follow-up to the licensee's vertical slice reviews, the team interviewed members of the licensee's review teams, reviewed the BPF ISA Summary for the UAl process, walked down a sampling of BPF UAl process drawings and reviewed sections 10 and 27 of SOP 409 for BPF UAl processing. The team also conducted field walk downs to verify the configuration of IROFS in the field and implementation of administrative IROFS into procedures. During the documentation review, the team noted that the licensee had identified a corrective action from their review to develop a formal engineering basis for the use of a chemical reagent in the UAl process. This chemical reagent inhibited the generation of UO_2 and thus NOx generation, based on the BPF UAl process chemistry. The team questioned why the priority assigned in PIRCS was "low" as this reagent addition was a chemical IROFS designated as BUA-43. The team's follow-up on other issues related to IROFS BUA-43 of the ISA is detailed in charter

item 9. The team concluded that the priority assigned was not appropriate for the circumstance since the licensee had plans in progress to restart the uranium aluminum process without resolution of this issue. The team did not note any additional issues from their field walk downs and documentation reviews for the BPF UAl process extent of condition. The team noted that the general evaluation methodology was reasonable and was performed with adequate engineering support and rigor.

The team performed an independent extent of condition (charter item 10) and noted that given the potential variability of material input into the Uranium oxide process, the team determined that the NFS extent of condition was incomplete because this process should have been included in the vertical slice review based upon the criteria selected by the licensee. In addition, various forms of UAl in storage may not be compatible with the UAl system. NFS plans on modifying the UAl system to include a station where test reactor fuel can be cut into smaller sections which will then be processed in the caustic dissolvers. The material could potentially present different reactions and/or rates than the normal UAl ingots. Additionally, some test fuel components were made from graphite and will require alternative processing. The team noted that these types of test reactor fuels were not addressed in the NFS extent of condition.

The licensee also performed an extent of cause investigation for their RCA Causal Factor 1, "Failed to implement training and assignment of NFS-TS-009 which allowed process change outside of established parameters to process granular aluminum fines in the BCS." This extent of cause investigation found 220 other procedures that were not tied to a specific job function and were therefore potentially susceptible to the same failure that allowed the lack of implementation for NFS-TS-009. All 220 procedures identified in PIRCS# P21793-I10153 were found to be properly implemented for the applicable job functions and appropriate personnel training had been completed for those procedures.

The licensee did not perform an extent of cause review for all of the root causes identified in their RCA. Extent of cause evaluations are typically performed for all identified root causes. Additionally, since the licensee RCA did not indicate lack of management oversight or lack of questioning attitude as root causes for this event, they did not perform an extent of cause investigation into those areas. The team concluded that the licensee did not perform an adequate extent of cause review because they did not evaluate all of the root causes in their RCA for extent of cause and did not evaluate the lack of management oversight or questioning attitude issues.

Conclusion

The team concluded that the licensee's root cause analysis identified three relevant causal factors that contributed to the BCS 2 event but failed to identify the primary root causes of the event. The licensee's RCA identified the primary root cause of this event to be "failure to implement NFS-TS-009" (Configuration Management of Process Change). The team disagrees with this primary root cause. The team determined that NFS had adequate procedural requirements at the time of the event and if those procedural requirements had been rigorously implemented the event would have been prevented. Therefore, an expectation that additional procedural requirements would have prevented this event is unrealistic due to the existing procedural requirements not being followed or enforced. Given the potential variability of input materials into the Uranium oxide process, the team also concluded that this process should have been included in NFS' vertical slice review based upon the criteria selected. Therefore,

the licensee's extent of condition review was incomplete. Additionally, the team concluded that the licensee did not perform an adequate extent of cause review because they did not evaluate the extent of cause for all of the root causes contained in their RCA.

8. Evaluate the actual and potential safety significance to workers, the public, and the environment.

The team reviewed the logs, data collected during the event, post event lab testing and interviewed licensee personnel to determine the actual and potential safety significance of the event.

The incident of concern is an acute chemical exposure to a worker from the release of NOx gas that could endanger the life of the worker or be released into the environment. To protect personnel in the BPF process area, upper and lower NOx detectors are installed at the siphon break at the top of the nitric acid knockout column and in the worker breathing zone. The NOx detectors are tied into local and remote (outside the BPF area doors) monitoring stations with associated alarms to allow operator monitoring of NOx concentrations and to alert workers in the event of a NOx release. The team determined the actual safety significance of the BCS 2 event was low because the upper NOx detector, an IROFS, functioned as designed and alarmed following the vigorous reaction in BCS 2, and, upon receipt of the alarm, BPF personnel evacuated the area. The team also noted that at no time during the event did the NOx detector in the worker breathing zone alarm and, as a result, workers were not exposed to hazardous levels of NOx gas. Furthermore, the facility ventilation and scrubber systems operated properly throughout the event resulting in no increase in releases of NOx gas to the environment.

During the October 13, 2009 BCS 2 event, the licensee's staff noted a local NOx concentration of 28.5 ppm for a short time duration for the upper NOx detector. Following the event and discovery of this unexpectedly high NOx concentration in the BPF, the licensee performed laboratory testing on October 14 through 16, 2009, with the UAl fines material and found that the material reacted vigorously with nitric acid to produce NOx gas at a significantly higher generation rate than previously calculated in the ISA for the processing of UAl ingots. Originally, the licensee's ISA and supporting calculations, which were based on the processing of UAl ingots, found a release of NOx gas would only result in an credible intermediate consequence chemical exposure event to a worker. The licensee determined that, with the higher NOx generation rate from processing UAl fines in the BCS 2, a credible high consequence chemical exposure event to a worker could occur in the BPF. The licensee's ISA criterion for a high consequence chemical exposure event to a worker is an average room concentration greater than or equal to 20 ppm. The team reviewed the licensee's ISA and new NOx generation calculations and concluded the potential safety significance to the workers was high from an acute chemical exposure to NOx gas released in the BPF.

After reviewing event details and the ISA, the team determined that there was no actual or potential safety significance to the public or the environment because the facility ventilation and scrubber systems operated properly throughout the event resulting in no increase in releases of NOx gas outside the BPF.

Conclusion

The team determined the actual safety significance of the BCS 2 event was low because the upper NOx detector functioned as designed and alarmed following the vigorous reaction in BCS 2, and, upon receipt of the alarm, BPF personnel evacuated the area. In addition, the team concluded that the potential safety significance to the workers was high from an acute chemical exposure to NOx gas released in the BPF based on a review of the results of calculations performed by the licensee. The team also concluded that there was no actual or potential safety significance to the public or the environment because the facility scrubber and ventilation systems operated properly throughout the duration of the BCS 2 event preventing an excessive release of NOx gas outside the BPF.

9. Evaluate the adequacy of the licensee's integrated safety analysis and corrective actions to ensure that the performance requirements are met for this and related accident scenarios.

The team reviewed the ISA and related chemical accident consequence evaluations for the UAl BCS to determine the adequacy of the licensee's ISA. The team noted that the October 13, 2009 upset condition was evaluated in the ISA as an abnormally high concentration NOx gas release into the facility. The chemical accident consequence evaluations supporting the ISA determined that a chemical exposure to the worker could at most result in a credible intermediate consequence event. The chemical occupational consequences were based on the following average room concentration criteria as approved in NFS ISA methodology:

- Intermediate Consequence ≥ 12 ppm
- High Consequence ≥ 20 ppm

The chemical accident consequence evaluations were based on generation rates averaged over an entire runtime period. NFS noted that this calculation method may not have adequately bounded the NOx generation that occurred on October 13, 2009. Therefore, on October 14-16, 2009, the licensee conducted laboratory analysis of the same UAl fines material involved in the upset in an effort to estimate the generation rate that had occurred. The laboratory testing determined that the NOx generation rate measured was significantly higher than the generation rate used in the consequence evaluations. Using the generation rate specific for the fines, the revised evaluations indicated that a credible high occupational consequence event was possible, which exceeded the safety basis of the ISA.

Based on the revised evaluations from the laboratory results, on October 19, 2009, NFS notified the NRC (Event No. 45446) in accordance with 10 CFR Part 70, Appendix A (b)(1) that the event had resulted in the facility being in a state that was improperly analyzed, or was different from that analyzed in the ISA, and which resulted in the failure to meet the performance requirements of 10 CFR 70.61.

The team performed an independent review of the safety basis of this accident sequence in the ISA. The ISA documented two IROFS as providing protection against NOx emissions: IROFS BPF-43 (the NOx detection/alarm system for evacuation) and IROFS BUA-43 (addition of a chemical reagent into the caustic dissolution system). On October 13, 2009, the licensee operated the UAl system without first processing material in the caustic dissolution station. This caustic dissolution station had the above two IROFS in place, however, the design change to directly input material into BCS resulted in IROFS BPF-43 as the only IROFS in place for the

BCS. An additional IROFS needed to be in place to provide adequate risk reduction to meet the performance requirements for a high consequence event. Therefore, in addition to exceeding the safety basis of the ISA, NFS operated the BCS without sufficient IROFS in place to meet the performance requirements.

10 CFR 70.61(b) states, in part, that the risk of each credible high-consequence event must be limited. Engineered controls, administrative controls, or both, shall be applied to the extent needed to reduce the likelihood of occurrence of the event so that, upon implementation of such controls, the event is highly unlikely or its consequences are less severe than those in paragraphs (b)(1)-(4) of this section. 10 CFR 70.61(b)(4) states, in part, that a high consequence event is an acute chemical exposure to an individual from licensed material or hazardous chemicals produced from licensed material that could endanger the life of a worker. The operations that occurred on October 13, 2009, in the BCS failed to meet the performance requirements of 10 CFR 70.61(b) due to insufficient IROFS being available and has been identified as URI 70-143/2009-011-06, Failure to meet performance requirements of 10 CFR 70.61(b). This issue will require additional NRC review and will be further evaluated in a subsequent inspection.

The team performed an independent assessment of the safety basis for NOx generation in the UAl system. The team identified concerns with the technical basis for IROFS BUA-43. The control was designed to limit UO_2 production in the caustic dissolution portion of the process (which limits NOx production in the BCS) through the addition of a chemical reagent. The team review of the technical basis for BUA-43 indicated that the licensee had not adequately quantified the effectiveness of this IROFS. Upon notification of the issue, the licensee failed to present adequate calculations that indicated that sufficient addition of the chemical reagent would prevent the release of excess NOx. 10 CFR 70.62(b) requires that each licensee maintain process safety information to enable the performance of an ISA and must include information pertaining to the technology of the process. The licensee's failure to maintain process safety information pertaining to the performance and technology of BUA-43 is identified as URI 70-143/2009-011-07, Failure to maintain process safety information required by 10 CFR 70.62(b). This issue will require additional NRC review and will be further evaluated in a subsequent inspection.

As part of the team's review of corrective actions, the team noted a corrective action to develop a formal engineering basis for IROFS BUA-43. However, upon questioning the licensee regarding this corrective action, the licensee stated that the intent was only to generate an engineering document that captured the literature references that supported the chemistry involved in BUA-43. The licensee had not identified the lack of quantification of the effectiveness of BUA-43 as an issue in its review. The team determined that the corrective action related to the technical basis of BUA-43 was inadequate.

The team reviewed the ISA's adequacy for the following additional processes that involved the generation of NOx gas: Uranium oxide, processes in the FMF, and the CDL tray and column dissolvers. The team noted that the ISA stated that NOx generation in the other process areas were listed as low consequence events. As part of NFS' corrective actions, NFS performed engineering calculations to quantify the potential NOx emissions for these other process areas. NFS' conclusion based on these new calculations was that the ISA properly characterized the consequences as low consequence. However, the team review of the calculations, including those for the UAl process, concluded that several controls, already in place (control of material addition, chemical reagent addition, ventilation system, etc.) for the process areas, were

mitigating the consequences of the accident scenarios. Therefore, these mitigating controls were required to be identified and controlled as IROFS to ensure that the accident scenario remained low consequence. 10 CFR 70.61(e) states, in part, that each engineered or administrative control or control system necessary to comply with the performance requirements of this section shall be designated as an item relied on for safety. The licensee's failure to identify engineered or administrative controls as IROFS for several accident scenarios in fuel manufacturing, Uranium oxide, UAl, and the CDL processes involving NOx generation is identified as URI 70-143/2009-011-08, Failure to identify engineered or administrative controls as IROFS required by 10 CFR 70.61(e). This issue will require additional NRC review and will be further evaluated in a subsequent inspection.

Conclusion

The licensee's ISA was not adequate to meet the performance requirements in 10 CFR 70.61, in that, a high consequence accident scenario (NOx generation in the UAl process) did not have a sufficient number of IROFS identified and implemented.

The licensee's corrective actions to ensure that the performance requirements were met for related accident scenarios were not adequate as evidenced by the inability to provide adequate technical basis for an IROFS (BUA-43). In addition, NFS did not identify IROFS for several accident scenarios in fuel manufacturing, Uranium oxide, UAl, and the CDL processes involving NOx generation that required IROFS to meet the performance criteria.

10. Independently determine the probable root and contributing causes of the upset, and independently conduct an extent of condition and extent of cause evaluation.

The team completed an independent evaluation to determine the probable root and contributing causes of the unexpected excessive generation of nitrogen compound gasses and heat in BCS 2 on October 13, 2009. To complete this independent determination, the team evaluated the processes, procedures and requirements related to the processing of waste material UAl in the BPF. The team also evaluated the licensee's change management process and performed personnel interviews in the areas of operations, operations supervision, chemistry, emergency preparedness, safety and plant management. Using the information gathered by these evaluations and interviews, the team developed a timeline of events and performed an events and casual factors analysis. To determine the probable root and contributing causes of this event the team classified the results of the events and causal factors analysis using the Management Oversight & Risk Tree (MORT) process.

The team concluded from the MORT analysis that the event root causes were a lack of management oversight of the change management process and a lack of questioning attitude by NFS staff. The lack of management oversight allowed the change process to be completed without proper completion of documentation in accordance with their procedures, and with poor communication between the engineering personnel and the licensee staff assigned to perform the technical and safety reviews. Among other indications, the following items revealed the lack of management oversight for the change management process. Management did not establish clear expectations for review of process changes and therefore these expectations were not enforced, trained or verified. The management reviews for process changes are specifically tasked with verifying that the technical review process is adequately performed, but did not identify that the documented technical basis and safety analysis was inadequate for the review to be performed. Management was aware that this process change was being urgently

implemented due to an upcoming MC&A inventory and did not reinforce an expectation for safety over production. NRC's expectation is that the management oversight program should have identified the adverse impact that production pressure was having on this process change and focused on safe operation of the facility. Therefore, the team determined that the requirements and expectations associated with the NFS change management process will have to be communicated, supported and enforced by NFS management to be effective in preventing recurrence of the failures that led to the event.

The MORT analysis identified that NFS' change process had five barriers that failed:

1. The lab testing was inadequate to support the process change.

2. The changes (ERC # 20091919 and ERC # 20092008) were improperly classified as urgent and due to being classified as urgent, ERC 20092008 by-passed the CCB review prior to implementation.

3. An inadequate technical basis was provided for the process change.

4. The CCB reviews for ECR # 20091919 and ECR # 20092008 (the review of ECR # 20092008 was conducted after the ECR was implemented) failed to identify that the change packages lacked adequate technical basis documentation (NFS-GH-901 states "NFS Change Control Process ensures that: Changes are appropriately documented to facilitate review, approval and implementation").

5. Technical/safety reviews failed to identify that processing of the fines would exceed the safety basis of the ISA.

The team identified that the underlying cause which led to these failures was the lack of questioning attitude displayed throughout the development of the process change and all of the reviews conducted to facilitate completion. Had any of the reviewers or CCB members questioned the lack of information contained in the technical basis provided, or if the lab technicians questioned the potential application of the testing that they were performing, the deficiencies in the implementation of the change management process and the inherent danger of the process change would have been identified.

The team identified two contributing causes for this event: production pressure and poor communication. NFS staff responded to an unwarranted sense of urgency to rapidly complete a procedural change to allow processing of the UAl fines. This apparent sense of urgency developed due to production pressure to complete the required annual special nuclear material (SNM) inventory. In fact, production over safety appeared to be institutionalized in procedure NFS-CM-004 in a step which allowed a change request to be classified as urgent to continue production. This led to shortfalls in the following areas:

- The sample size of the lab testing was not adequate to justify the process changes that were implemented, the lab testing used to facilitate this process change was of a preliminary nature and was not formally planned or documented;

- Production pressure contributed to the associated procedure changes being classified and processed as "urgent," but did not meet the licensee's requirements to be classified as "urgent;"

- The task safety analysis was inadequate for the known hazards, chemistry personnel recognized and documented the potential for vigorous chemical reactions when processing materials with large surface areas (fine material in the form of shavings or floor sweepings), but this information was not utilized by the personnel performing the process reviews; and

- Management review and oversight of the process change was inadequate to detect the failures of the technical reviews.

The team also identified poor communications as a contributing cause for this event. Poor communications were evident in the following areas:

- The Process Engineer's request for the chemist to develop a method for processing the fines material was of an informal nature and did not provide the chemist with the necessary information. Specifically, the chemist was unaware that these lab results would be used to change the UAl process to allow the processing of other types of fines material (the process engineer did not intentionally misinform the chemist; the process engineer was unaware that the fines material that remained to be processed differed from the material provided to the chemist);

- The chemist verbally discussed the results of the lab testing at the BPF Production Meeting on October 5. The requirements for processing this fines material were developed by the chemist and verbally presented. The chemist did not provide the appropriate limits for these results and it was not recognized that these results contradicted the previous documented lab testing information provided for processing fines; and

- The safety and regulatory reviews for the final procedure change that allowed the processing of fines material in the BCS were completed by phone communication. The reviewers were unable to personally validate the information being provided to them since these reviews were conducted over the phone. The team noted that management was directly involved in the informal/verbal communications that occurred prior to the event which contributed to the expediting of the ECR with inadequate technical and safety reviews which led to the event.

<u>Conclusion</u>

The team MORT indicated that the root causes were a lack of management oversight of the change management process and a lack of questioning attitude by NFS staff. The team also determined that the significant contributing causes to this event were production pressure and poor communications.

Independent Extent of Condition

The team noted that the introduction of the UAl fines into the BCS produced an unanticipated result since the fines were not the graphitic material that was tested in the lab. The introduction of unanticipated material was the event initiator. The team performed an independent extent of condition surrounding the BCS 2 event to identify other possible unexpected materials that could be event initiators. The team's analysis focused on the composition of materials that were

received under recent DOE contracts. In general, there are several material inputs to BPF and CDL that could deviate from the original design and contain contaminants that could cause unwanted results. These materials are located on site but have not been processed. The team noted that NFS will need to ensure proper sampling and verification of constituents prior to processing. Specifically, the team noted the following:

- Within the CDL, the Uranium Hexafluoride (UF_6) system recently experienced a fire while venting a large 5A UF_6 cylinder. The fire was due to a Fluorine (F_2) cover gas that behaved as an oxidizer and burned through the braided stainless steel Teflon-lined hose. The preliminary root cause analysis determined that the hose material was incompatible with the F_2. NFS was unaware that F_2 could be generated in a UF_6 cylinder due to long term storage. This phenomenon is due to the higher alpha flux that causes a disassociation of the UF_6 resulting in the formation of F_2 gas. NFS is currently assessing long term modifications of the system in order to process a cylinder with a F_2 cover gas. Although the smaller UF6 cylinders were sampled in the laboratory this larger 5A cylinder was not sampled due to the uranium mass limit in the laboratory.

- Various forms of UAl in storage may not be compatible with the UAl system. NFS plans on modifying the UAl system to include a station where test reactor fuel can be cut into smaller sections which will then be processed in the caustic dissolvers. These components will be constructed of UAl plates. The material could potentially present different reactions and/or rates than the normal UAl ingots. Additionally, some test fuel components were made from graphite and will require alternative processing. The team noted that these types of test reactor fuels were not addressed in the NFS extent of condition.

- Various forms of oxide that NFS possesses may not be compatible with the Uranium oxide system. NFS recently sampled a Uranium oxide container received from DOE and the sample was highly contaminated with organics (i.e. carbon components). NFS returned the sample to DOE and DOE confirmed the results. Note that the DOE shipping manifests did not indicate any contaminants. NFS plans on installing a system to remove the organics prior to dissolution. Also, the DOE material includes UO_2 which may produce a much higher NO_x generation rate than the normal black oxide (U_3O_8). The UO_2 may be processed in a device prior to being introduced into the Uranium oxide dissolvers, but the processing controls should be evaluated.

The team noted that, based on their review of the FMF, this facility undergoes very little change in the input materials. The team concluded that the FMF is likely not susceptible to a similar event as occurred in the UAl system due to the tight controls of the input materials as well as the consistency in the generated output product.

Conclusion

The team determined that the potential exists for a variety of input material into the BPF processes which could cause an unexpected reaction. The licensee must determine what actions are necessary to ensure that material introduced into the process systems is known, well analyzed, and will not result in upset conditions.

Independent Extent of Cause

The team used a risk-based approach and defined other potential instances of similar causes, evaluated the risk of a similar event occurring with a similar cause and then performed personnel interviews and change management document reviews to determine the extent to which each root cause had affected other areas of the facility. The team reviewed the areas of management oversight which could contribute to a similar event or lead to a non-compliance with a license condition. The team found that the lack of management oversight was not isolated to this event and, if not improved, could contribute to a similar event. The team reviewed several areas to determine if the lack of questioning attitude had or could contribute to a similar event or lead to a non-compliance with a license condition. The team found that the lack of questioning attitude was not isolated to this event and indications of the lack of a questioning attitude were found in the decisions made by NFS management and in the reviews performed by technical and safety staff.

As part of the extent of cause, the team reviewed 60 ECRs that were processed as Urgent to determine if the technical basis for the ECRs was adequate. The team found that 10% did not have an adequate documented technical basis. NFS management review is specifically tasked with verifying that the technical review process is adequately performed. The documents suggested that NFS' CCB failed to question the lack of an adequate documented technical basis or question how the technical and safety reviews were properly completed without an adequately documented technical basis. It was also apparent that no reviewers questioned the lack of information that was documented.

The team noted a previous violation was issued in August 2008 where the NRC identified a lack of adequate technical basis for changes made to the facility. The licensee responded to this violation and stated that corrective actions were in place to prevent recurrence. The BCS event occurred, in part, as a result of the same lack of adequate technical basis for changes to the facility. This event is indicative of a lack of oversight to ensure that corrective actions had been adequately implemented.

The team also reviewed ECRs to determine the extent of overuse of the classification "urgent." The team reviewed 107 ECRs that had been classified as "urgent" to determine if they had been properly classified in accordance with NFS-CM-004 (NFS Change Control Process). ECRs were classified as "urgent" across all engineering departments including the FMF. The team found that 10 of these 107 ECRs were incorrectly classified. Interviews with NFS management indicated that they were aware that ECRs were routinely classified incorrectly, but compliance with NFS-CM-004 had not been enforced.

The team noted that NFS management planned to restart the UAl process on November 30, 2009, without resolving an issue related to the effectiveness of an IROFS. The effectiveness of IROFS BUA-43 was questioned by NFS during performance of an extent of condition review for the October 13, 2009 event. NFS's review of IROFS BUA-43 recommended that a formal engineering basis be developed for the use of a chemical reagent to inhibit UO_2 production (which inhibits NOx generation) but this engineering basis was not completed or scheduled to be completed prior to restart of BPF. However, upon questioning the licensee regarding this corrective action, the licensee stated that the intent was only to generate an engineering document that captured the literature references that supported the chemistry involved in BUA-43. The licensee had not identified the lack of quantification of the effectiveness of BUA-43 as an issue in its review. The team determined that the corrective action related to the technical

basis of BUA-43 was inadequate. Additionally, the development of the engineering basis for BUA-43 was assigned a priority of "low" in the NFS corrective action program. The significance of restarting a process with an unresolved technical basis for an IROFS was not questioned by NFS management or staff. In addition, the item was not given a priority high enough to expeditiously resolve the issue.

The team reviewed the ISA analyses for other processes in the plant to determine if other issues with the calculations or IROFS may exist as a result of the identified root causes. The team review of the ISAs and calculations, including those for the UAl process, concluded that several controls, already in place (control of material addition, chemical reagent addition, ventilation system, etc.) for the process areas, were mitigating the consequences accident scenarios, but were not identified as IROFS. These mitigating controls were required to be identified and controlled as IROFS to ensure that the accident scenario remained low consequence. This indicated a problem with management oversight in the development of the ISA.

NFS management was aware that procedure NFS-CM-004 allowed processing of ECRs as "urgent" based not only on failures that impacted personnel safety but also failures that significantly impacted operations. NRC management questioned the expedited processing of ECRs based on the operations impact and NFS management responded by revising the definition to exclude operations impact, but NFS management did not question or evaluate if other procedures contained similar statements that could foster a belief that production was as important as safety.

The team observed a NRC criticality inspection exit meeting and noted that the inspectors identified a minor issue that had been documented in PIRCS P7914 on May 19, 2006, where a noncompliance with regulations, specifically license conditions, had been identified in that no basis documents existed for glass columns to address fixed neutron absorber requirements. The issue had not been addressed or corrected as of December 10, 2009, and another corrective action report (C3455) was written to address the problem with a due date of October 1, 2010. Management did not identify or correct this problem over a substantial period of time which indicates a lack of oversight in maintaining the safety basis.

Conclusion

The team found that the lack of management oversight was not isolated to this event. The team extent of cause evaluations revealed that the root causes of the October 13, 2009 event were apparent in other facility processes in that, ECRs were routinely and incorrectly classified as "urgent" across all engineering departments. NFS management was aware of this practice and did not require compliance with procedure NFS-CM-004 and, ECRs across all engineering departments had been reviewed, approved and implemented without an adequately documented technical basis. The team found that the lack of questioning attitude was not isolated to this event and indications of the lack of a questioning attitude were found in the actions of the technical and safety staff and in the decisions made by NFS management.

11. Determine the adequacy of the licensee's planned actions to prevent recurrence.

The team reviewed the corrective actions developed by the licensee and documented in the RCA. The licensee documented this event in the site's corrective action program and a RCA team developed several corrective actions to prevent the recurrence of this type of event. The

team evaluation of the RCA is discussed in charter item seven. The team reviewed each of the corrective actions and determined that the basis of each corrective action was adequately supported by the RCA team's findings. The corrective actions developed by the RCA team included the following:

- Develop and implement a project management program to be executed for all new projects or major process changes to current processes. Include in the program, at a minimum, the major components currently found in NFS-TS-009.

- Develop and implement a process to ensure formal communications between Operations and Laboratory to minimize confusion of technical information.

- Revise the Corrective Action Program to establish the requirements for the development and implementation of corrective actions.

- Revise the Configuration Management Program to provide the requirements for a technical basis with sufficient detail to facilitate the risk and hazard assessments of process changes.

- Enforce the requirements of NFS-GH-911 and NFS-HS-A-67. (ISA Chemical analyst did not review the process change IAW NFS-GH-911 and NFS-HS-A-67)

- The Human Performance Group should review the working environment of the Process Engineers, including number of systems for which each is responsible, the number of hours worked, the simultaneous task load, perceived production pressures, etc., since numerous error precursors in the Human Performance Tools Handbook appear to be involved and are possible contributors to this event.

- Evaluate the waste handling capability and impact on production processes. Ensure that waste handling is considered as an integral part of production management and proposals by responsible engineers and project managers.

- Review and evaluate the EB software and implementation to eliminate the possibility of unexpected changes occurring in documents and processes controlled by the software.

- Require routing of mark-ups with copies of procedures and documents for approval of changes.

- Write and implement a document providing guidelines to help ensure process changes made on off shifts have adequate technical support and oversight.

The team found that the corrective actions developed in the RCA were focused on the specific failure areas identified by the RCA team. The team assessed the RCA corrective actions and determined that these corrective actions would address the necessary enhancements to facility processes and programs that were identified by the RCA to; (1) increase the procedural requirements for management of process changes; (2) reinforce the importance of the change management process; and (3) increase the effectiveness of the corrective action program.

The team noted that the licensee's RCA differed from the team's RCA in that it did not document the lack of management oversight or the lack questioning attitude as root causes for this event. The root causes identified by the team were the underlying causes related to all of the contributing causes for this event. Interviews and meetings with RCA team personnel revealed that the RCA team recognized the lack of management oversight and lack of questioning attitude, but the RCA team did not document these factors as causes of the event. The team determined that these areas would require specific corrective actions to prevent recurrence of an event of this type. The team's evaluation of the NFS corrective actions found that the RCA corrective actions would not address lack of management oversight to a level that would prevent recurrence.

The team evaluated additional actions that were performed by the licensee to respond to the event. These additional actions were developed to support the repairs to the affected systems, develop the technical basis and procedural changes required for restart and continued processing, and to evaluate the safety basis of the involved process and similar processes in the facility.

The team found that the additional training and enhancements to the change management procedural requirements were effectively implemented. The following improvements were indentified:

- After the event, the technical basis being developed for minor ECRs contained the appropriate information to allow a thorough review by the technical and safety staff, if additional information was requested by the CCB or the reviewer(s), that information was also documented in a revision to the technical basis.

- The technical basis reviews that were completed after the event displayed an improved questioning attitude, in that ECRs that did not meet the new requirements were being returned to the engineer(s) for revision.

The licensee developed the RCA corrective actions and additional actions to facilitate a restart of the UAI process in early December 2009. The NRC conducted additional inspections to verify that corrective actions had been completed and identified that they were insufficient to ensure that all causal factors for the event were adequately addressed prior to restart of the UAI.

A management review of the performance of NFS over the last two years resulted in the issuance of a Confirmatory Action Letter (CAL) which has additional comprehensive corrective actions that must be completed prior to restart. Documentation of those additional corrective actions associated with the commitments in the CAL will be contained in a later report.

Conclusion

The team determined that the RCA did not specifically identify lack of management oversight or lack of questioning attitude as root causes for this event. No corrective actions were developed that would adequately address these root causes. These root causes are underlying causes for the failures in all of the areas addressed by the corrective actions. The team concluded that the corrective actions developed by the licensee's RCA team were adequate to address the specific failures identified by the RCA team but inadequate to prevent recurrence of this type of event.

EXIT MEETING:

During the course of the inspection, the team provided members of the plant staff and management with summaries of inspection findings a daily basis. During these discussions, licensee representatives identified some material examined during the inspection relating to as proprietary. All proprietary information was returned to the licensee. The team presented the inspection results to members of the plant staff and management at a public meeting conducted on March 2, 2010, in Erwin, TN. The plant staff acknowledged the findings presented.

SUPPLEMENTAL INFORMATION

KEY POINTS OF CONTACT

Licensee

D. Ashworth, ISA Fire Analyst
R. Bond, Senior Project Director
B. Butler, Process Engineer
G. Craig, ISA Engineer
R. Danna, Process Engineering Section manager
M. Eakin, NCS Analyst
B. Kidd, B&W Lynchburg HPI Coordinator
D. Kudsin, President, Nuclear Fuel Services
T. Lindstrom, Vice President Operations
R. Maurer, NCS Analyst
M. Moore, Director, Safety and Regulatory
J. Nagy, Chief Nuclear Safety Officer
D. Nixon, Process Engineer
J. Pritchard, Analytical Laboratory Manager
K. Roberts, ISA Radiological Analyst
D. Rogers, BP Building Manager
S. Sanders, Training Manager
E. Senter, ISA Team Leader
T. Sheehan, Director, HEU Operations
D. Ward, Interim Director, Safety and Regulatory
J. Wheeler, Licensing and ISA Manager

NRC

J. Shea, Director, Division of Fuel Facility Inspection (DFFI), RII
E. Cobey, Deputy Director, DFFI, RII
S. Vias, Chief, Fuel Facility Branch 1, RII

LIST OF ITEMS OPEN, CLOSED AND DISCUSSED

Item Number	Status	Type/Description
70-143/2009-011-01	Open	URI - Failure to properly classify ECRs. (Paragraph 2)
70-143/2009-011-02	Open	URI - Failure of the CCB reviews. (Paragraph 2)
70-143/2009-011-03	Open	URI - Failure to perform adequate technical reviews. (Paragraph 2)
70-143/2009-011-04	Open	URI - Failure to perform adequate safety reviews. (Paragraph 2)

70-143/2009-011-05	Open	URI - Failure to properly implement 10 CFR 70.72. (Paragraph 4)
70-143/2009-011-06	Open	URI - Failure to meet performance requirements of 10 CFR 70.61(b). (Paragraph 9)
70-143/2009-011-07	Open	URI - Failure to maintain process safety information required by 10 CFR 70.62(b). (Paragraph 9)
70-143/2009-011-08	Open	URI - Failure to identify engineered or administrative controls as IROFS required by 10 CFR 70.61(e). (Paragraph 9)

LIST OF DOCUMENTS REVIEWED

Procedures

LOA-18771-429, Portable NOx Detector for U-Aluminum Bowl Cleaning Station 1, dated November 18, 2009
NFS-CM-004, NFS Change Control Process, Rev. 3
NFS-GH-44, Evaluation and Implementation of Internally Authorized Changes, Rev. 10
NFS-GH-901, Configuration Management Program, Rev. 12
NFS-GH-946, Operational Decision Making, Rev. 0
NFS-HS-A-60, Integrated Safety Analysis Change Control, Rev. 8
NFS-HS-A-61, Integrated Safety Analysis Accident Consequence Evaluations, Rev. 9
NFS-HS-B-32, Attachment A, Special Air Sample Record Hi Volume, Rev.6
NFS-TS-009, Configuration Management of Process Change, Rev. 0
SOP 401, Section 1, General Requirements for BLEU Preparation and Associated Facilities, Rev. 24
SOP 409, Section 10, Uranium Aluminum Dissolution, Rev. 27
SOP 409, Section 10, Uranium Aluminum Dissolution, Rev. 28
SOP 409, Section 27, Centrifuge Bowl Cleaning Process, Rev. 15
SOP 409, Section 27, Centrifuge Bowl Cleaning Process, Rev. 16

Miscellaneous Documents

Blended Low-Enriched Uranium Preparation Facility Integrated Safety Analysis Summary, Rev. 6, dated January 2009
NFS Site ISA Summary, Rev. 6, dated January 2009
CD Line (supporting License Amendment) Integrated Safety Analysis Summary, Rev.1, dated February 2009
21T-09-1183, General Items Relied on for Safety (IROFS) and Safety-Related Equipment (SRE) – Bldg. 333, Rev. 32
21T-09-0668, IROFS and SRE – Bldg. 333 U-Aluminum Dissolution, Rev. 22
21T-09-0388, IROFS and SRE – Bldg. 333 U-Aluminum Dissolution Bowl Cleaning Station, Rev. 22
53T-09-0102, Calculation of Overall Excess NaNO3 for a “Typical” Run of Current U/Al Material in Strainer Baskets, dated November 9, 2009
55T-09-0746, Plan for Recovery from U-Al Bowl Cleaning Incident, dated October 13, 2009

55T-09-0839, Restart of Operations in the Building 333 Bowl Cleaning Stations and the U-aluminum Dissolution Systems, dated November 30, 2009
333-F0404-D, Rev. N, BPF HEU Nitric Acid Knockout Column P&ID
333-F0410-D, Rev. X, BPF U Aluminum Separation P&ID, Sheet 5
333-F0411-D, Rev. BB, BPF U Aluminum Separation P&ID, Sheet 6
333-F0414-D, Rev. AA, BPF U Aluminum Dissolution Accountability Columns, Sheet 9
333-F0415-D, Rev. P, BPF Caustic Make-up and Storage Tanks, Sheet 10
333-F0423-D, Rev. R, BPF U Aluminum Dissolution Centrifuge Cleanout Station
333-F0424-D, Rev. I, BPF U Aluminum Dissolution Centrifuge Cleanout Station 2
333-F0549-D, Rev. H, BPF HEU Staging Columns P&ID
333-F0553-D, Rev. M, BPF HEU Mix / Measure Columns P&ID
GEN-BPF-43/BUND-17, BPF HEU & LEU Area NOx Detector, Rev. 0
HEU-11-01-01, Residual Uranium Compounds from Caustic/Nitrate Treatment of UAl Dross, dated November 7, 2009
HEU-11-02-01, Test Plan: Dissolution of U-Al Floor Sweepings and Dross, Rev. 0
HEU-11-02-01, Interim Report: Dissolution of U-Al Floor Sweepings and Dross, Rev. 0
HEU-11-02-02, Final Report: Dissolution of U-Al Floor Sweepings and Dross, Rev. 0
ISA File, Monitoring for Nitrogen Dioxide vs. Nitric Oxide, dated April 5, 2006
ODMI-09-007, Evaluation of BPF Recovery Plan Due to Greater than Expected Exothermic Reaction in the U-aluminum Bowl Cleaning Station, dated October 15, 2009
SA-BBC-7, Bowl Cleanout Stations WOG Line Set Point Analysis
SA-BUA-43, U-Al Bowl Cleaning NaNO3 Flow Switch Setpoint Analysis, Rev. 2

Problem Identification Resolution and Correction System Reports:

P21448-I10038, P21448-I10047, P21448-I10059, P21448-I10073, P21793-I10153

Work Orders (Work Requests):

125761, 126026, 126028, 126488, 130367, 131409, 131439, 133762, 133782, 134017, 134045, 134307, 134729, 134982, 135345, 135353, 136124, 136124, 136039, 136180, 136211, 136304, 136313, 136665, 136668, 137574, 138452, 139727, 140152, 140308, 142352

Enterprise Change Requests (ECRs)

00000117, 20080380, 20080456, 20080561, 20080562, 20080653, 20080691, 20080703, 20080720, 20080964, 20081214, 20081388, 20081389, 20090121, 20090160, 20090168, 20090180, 20090300, 20090310, 20090504, 20090519, 20090580, 20090650, 20090690, 20090720, 20090748, 20090937, 20090959, 20090991, 20090993, 20091054, 20091055, 20091078, 20091091, 20091094, 20091148, 20091213, 20091215, 20091266, 20091319, 20091371, 20091410, 20091416, 20091491, 20091492, 20091511, 20091531, 20091547, 20091548, 20091549, 20091567, 20091574, 20091590, 20091593, 20091599, 20091601, 20091612, 20091643, 20091647 20091657, 20091673, 20091675, 20091704, 20091715, 20091733, 20091742, 20091746, 20091777, 20091789, 20091796, 20091850, 20091856, 20091862, 20091891, 20091903, 20091919, 20091922, 20091934, 20091977, 20091984, 20092008, 20092043, 20092044, 20092046, 20092048, 20092088, 20092101, 20092324, 20092327, 20092328, 20092331, 20092332, 20092335, 20092336, 20092340, 20092343, 20092352, 20092356, 20091073-03, 20091672-02, 20092061-01

List of Acronyms

ADAMS	Agency Documents Access and Management System
AIT	Augmented Inspection Team
BCS 2	Bowl Cleaning Station 2
BLEU	Blended Low Enrichment Uranium
BPF	BLEU Preparation Facility
CAL	Confirmatory Action Letter
CCB	Change Control Board
CDL	Commercial Development Line
CFR	Code of Federal Regulations
DFFI	Division of Fuel Facilities Inspection
DOE	Department of Energy
DRS	Division of Reactor Safety
EAL	Emergency Action Levels
ECR	Enterprise Change Request
F_2	Fluorine
FMF	Fuel Manufacturing Facility
HEU	Highly Enriched Uranium
IP	Inspection Procedure
IROFS	Item Relied on For Safety
ISA	Integrated Safety Analysis
MC&A	Material Control and Accounting
MORT	Management Oversight and Risk Tree
NFS	Nuclear Fuel Services
NOx	Nitrogen Oxide Compounds
NRC	Nuclear Regulatory Commission
ODMI	Operational Decision Making Instruction
PIRCS	Problem Identification, Resolution, and Correction System
ppm	Parts Per Million
RCA	Root Cause Analysis
Rev.	Revision
RII	Region II
SCBA	Self Contained Breathing Apparatus
SIT	Special Inspection Team
SOP	Standard Operating Procedure
SRE	Safety Related Equipment
UAl	Uranium Aluminum
UF_6	Uranium Hexafluoride
UO_2	Uranium Dioxide
URI	Unresolved Item
VP	Vice President
WOG	Wet Off Gas

Event timeline for Unanalyzed Event caused by generation of excessive amounts of Nitrogen Oxides (NOx) during processing of Uranium Aluminum (UAl) in Bowl Cleaning Station (BCS) 2

Approximately 800 cans of Dross material (heterogeneous metallic mixture resulting from oxygen combining with uranium and aluminum on the surface of molten metal, Clinkers (molded UAl discs), Flashing (overflow metal on the outside of a mold), and Ingots) and Floor Sweepings (fine particles) will be segregated and/or processed (950kg of UAl floor sweepings and dross including approximately 245kg of highly enriched uranium).

Date	Time	Activity
11/14/08		A Laboratory Test Plan is developed for dissolution (chemical separation) of UAl Floor Sweepings and Dross. This test plan was developed to determine the proper method for testing the various forms of the material to be processed. This test plan recognized the potential for a rapid reaction due to the small size of some of the material and corresponding large surface area of that material; "Rapid dissolution rates are expected for these fine particles because of the increased surface area associated with the material."
4/24/09		Interim Lab Report for Dissolution of UAl floor Sweepings and Dross is completed and provided to the Operations Department. This interim lab report documents a vigorous reaction when processing small material in caustic (sodium nitrate) solution "with floor sweeping material less than 2mm in size, a vigorous reaction occurs almost instantly."
5/5/2009		The Process Engineer submits a Request for Safety Evaluation to the ISA group; this safety evaluation is for processing of UAl Dross and Floor Sweepings.
7/31/09		SOP 409, Section 10 (Uranium Aluminum Dissolution), Rev. 24 is issued. SOP 409, Section 27 (Centrifugal Bowl Cleanout Process), Rev. 14 is issued. These revisions change the UAl process to provide a safe method for processing UAl Dross and Floor Sweepings material. (The processing of fines is not allowed by these procedure changes.)
7/31/09		NFS commences processing of Dross material in the BPF dissolvers.

Date	Time	Activity
8/24/09	0921	Interim Lab Report Approved, Dissolution of UAl Floor Sweepings and Dross issued. The following statements are contained within this report: • No metallic granular UAl material should be placed into the current UAl dissolver due to the vigorous reaction with caustic solution. • Due to inaccurate classification of the dross and floor sweeping material during packaging by DOE, other materials may be found during processing which will need further development testing.
Aug 2009		Transportation department identifies high levels of uranium in the waste stream. Non-destructive assay scan of the waste containers indicated significantly higher amounts of uranium than were expected. In order to decrease the amount of uranium in the trash and to recover as much uranium as possible, operations requests lab analysis for Dross, Floor Sweepings, and sieve waste (<1000 micron) for processing with Nitric Acid.
9/16/09	1126	Final Lab Report Approved, “Dissolution of UAl Floor Sweepings and Dross” issued.
9/22/09	0900	BPF Dross "Pre-Sieved (< 1000 micron)" sent to lab, sorted, and tested; to determine if and how this material could be processed; lab tests concluded October 1.
10/1/09		Expedited ECR processed for SOP 409, Section 10, Rev. 26, the purpose of this revision was to allow processing of fine material.
10/5/09		Lab results for BPF Dross Pre-Sieved (<1000 micron) verbally presented by the chemist at morning meeting. Lab was able to remove approximately 80% of the Uranium from both the residual strainer waste metal shavings and the sieve pan waste by increasing the Nitric acid from 5 molar to 8 molar with an increased process time (~8hrs). <u>The sieve pan waste used in this test (predominantly graphite) had a low metal content (this is significant because the material that generated the excessive heat and NOx on October 13, 2009 was high in metal content).</u> The lab did not document these results in a formal report and considered them to be preliminary (only tested 1 can of sieve waste), the chemist involved was unaware that these results would be used to justify a procedure change to allow processing of the sieve waste in the BCS using nitric acid.

Date	Time	Activity
10/12/09		SOP 409, Section 27 (Centrifugal Bowl Cleanout Process), Rev. 15 is issued. Changed paragraph 5.1.2 to increase the concentration from approximately 5 molar to approximately 8 molar or less, the basis for this procedure change was the verbal report of the lab results made on the morning of October 5..
10/12/09		SOP 409, Section 10 (Uranium Aluminum Dissolution), Rev. 26, is issued. Changed paragraph 5.1.27 to include steps for removal of UAl fines and processing of these fines in the BCS. This procedure change allowed the processing of sieve pan waste (fines) using nitric acid (the basis for this procedure change was the verbal report of the lab results made on October 5), at this time, NFS operations personnel were unaware of the significant difference between the material that had been provided to the lab and the material that was to be processed).
10/12/09		SOP 409, Section 10 (Uranium Aluminum Dissolution), Rev. 27, is issued. The need for this change was recognized by the 2nd shift operators. This revision changed paragraph 5.1.27 to delete transfer of filings to lab for processing and added steps to process these materials (the process engineer stated that the basis for this procedure change was the verbal report of the lab results made on October 5).
10/12/09		Safety & Regulatory Review Routing Form for SOP 409, Section 10, Rev. 27, is signed-off; most of the Safety and Regulatory review signatures for approval of this revision were completed per phone call.
10/12/09		2nd shift personnel contacted the process engineer by phone to revise the operator aids at the glove boxes. The posted operator aids did not get changed when SOP 409, Section 10, Rev. 26, was completed and in their current form, these operator aids do not allow processing of fines, the operator aids were revised per this phone call to allow the processing of fines.
10/13/09	0410	Three strainer baskets of sieved UAl material (fines) are loaded into a bowl for processing within BCS 2.
10/13/09	0415	Processing (dissolution) of fines is initiated in BCS 2.
10/13/09	0417	Initial indication of greater than expected exothermic reaction from BCS 2 (excessive bubbling of solution with greater than expected NOx generation).
10/13/09	0420	Due to the greater that expected reaction, the operator turned off the BCS 2 heaters and stopped recirculation.

Date	Time	Activity
10/13/09	0420-0435	Operators monitored NOx levels and solution temperature.
10/13/09	0425	Operators jogged (cycled on and off) the recirculation pump and cycled valves to relieve potential overpressure.
10/13/09	0435	NOx alarm sounded and the BPF building is evacuated.
10/13/09	0440	Personnel accountability completed, required plant notifications made, and reentry requirements confirmed (NOx levels <3 ppm by remote indication).
10/13/09	0445	Low NOx levels observed and initial reentry made to shutdown the solvent extraction process.
10/13/09	0450	A second NOx alarm is received and the reentry team evacuates (Lab results from October 14, 23:16 indicate that the reaction was continuing from initiation and this second alarm was not due to shutdown of equipment).
10/13/09	0515	Third shift supervisors make a second reentry, this reentry is made using SCBA to verify facility condition and to determine the state of BCS 2.
10/13/09	0525	NOx alarms remain clear and a third reentry is made by the Plant Superintendent and a Radiation Technologist, this entry is made without SCBA. The purpose of this entry was to verify facility condition, check for decreasing temperatures in BCS 2, and to verify the indications from the installed NOx detectors with portable NOx detectors. This entry lasted approximately 45 minutes. (The readings on the portable NOx detectors were consistent with the readings on the installed NOx detectors.)
10/13/09	0550	Third NOx alarm sounded and building evacuated.
10/13/09	0800	Fourth reentry is made in SCBA. This entry is made by the First Shift Supervisor and a Radiation Technologist to verify facility condition, decreasing temperature (~105°F) in BCS 2 and to again assess the function of both stationary NOx detectors with portable NOx detecting equipment. (The readings on the portable NOx detectors were consistent with the readings on the installed NOx detectors.)
10/13/09	0815	This event is discussed at the daily BPF operations meeting.
10/13/09	0915	This event is discussed at the daily senior management problem screening meeting.

Date	Time	Activity
10/13/09	1000	NFS management evaluates this event and correctly concludes that it does not meet NRC reporting requirements (the event was not reportable but a related reportable event is properly declared on October 19, see October 19, 2010 @ 1330 timeline entry).
10/13/09	1100	Sustained low NOx levels and low temperature in BCS 2 confirmed. Operations, Management and Engineering personnel enter the BPF processing area to conduct an assessment of affected equipment.
10/13/09	1200	Building reoccupied and all 333 HEU processing activities are suspended.
10/13/09	1330	Management and Support Function meeting is conducted to begin evaluation of the event and to identify response activities.
10/13/09		The BP Building Manager develops a “Plan for Recovery from U-Al Bowl Cleaning Incident” and sends that plan to the Director, HEU Operations for review.
10/13/09	1926	NFS management contacts NRC Region II through the NRC Headquarters Operations Office to discuss the event and the activities that will be completed prior to restart of the UAl process.
10/13/09	1930	Utilities and heaters to BCS 1 & BCS 2 are isolated and these process areas are posted as out of service.
10/13/09	1930	Caustic dissolution processing resumed to clean out the system and to place the equipment in a safe condition for a prolonged shutdown. No new material is introduced into the system.
10/14/09	10:14	The BPF Project Director requests that the chemistry lab determine if the dissolution can be safety performed in the BCS.
10/14/09	19:00	The chemistry lab receives a sample of material and begins testing.
10/14/09	22:17	NFS documents the decision to perform a small team Tap Root investigation for the event (documented in the PIRCS. A Tap Root investigation is performed to determine the Root and Contributing causes of an event (PIRCS Investigation ID# 10025).

Date	Time	Activity
10/14/09	2316	First round of lab tests simulating the BPF event are completed. The chemistry lab determines that the processing of fines is too vigorous to implement.
10/15/09	0800	Second round of chemistry lab testing begins to identify conditions for improved control of reaction.
10/15/09	0830	First round of lab tests are summarized at the BPF meeting; vigorous reaction reported when simulating dissolution event in lab.
10/15/09	1430	The ODMI is developed for Evaluation of BPF recovery plan due to a greater than expected exothermic reaction in the UAl BCS. The affected systems are posted as out of service.
10/16/09	0830	Second round of lab testing finds improved results for controlled reaction using lower solids load, 5 molar nitric acid, and no heat. These preliminary lab results are summarized at the morning BPF Operations meeting.
10/16/09	1035	The chemistry lab attempts to duplicates the event reaction in order to identify the composition and quantities of off-gas generated.
10/16/09	16:00	Lab test results are summarized by the chemistry lab. Testing concludes that, at greatly reduced material loading and starting at 2 molar free acid, the reaction can be controlled but throughput is restricted (<1 kg U/day) and solution [U] < 10 g/L.
10/19/09	1330	NFS Management and the ISA group determine that the process upset was a result of an event that was outside of the bounds of the ISA and therefore required a report to the NRC within 24 hours. Lab analysis performed on material similar to the material being processes in the BCS 2 displayed a generation of NOx that was outside of the bounds established in the ISA.
10/19/09	1700	Event #45446 reported in accordance with 10 CFR 70.74; \ 10 CFR 70, Appendix A, (b)(1), due to NOx generation higher than had been previously analyzed.
10/22/09	0854	NFS documents assignment of a Full Team Root Cause Investigation to investigate the event.

Date	Time	Activity
System isolation and restoration entries for entire BPF		
10/29/09		Team informs NFS that NRC does not have an official hold on operations of the UAl system.
11/14/09		NFS experiences a fire in the CDL due to unexpectedly high concentrations of fluorine in a 5A cylinder. No injuries or releases occur. All operations in CDL are shutdown to investigate the event.)
11/17/09		NFS PIRCS Investigation ID#10153 is completed. This investigation was developed as a corrective action from the Tap Root investigation as was performed to determine if any procedures were not properly implemented and would therefore not be utilized by NFS staff and management (one of the contributing causes of the event was related to the improper implementation of NFS Process Management Procedure, NFS-TS-009.
11/30/09		NFS informs the Resident Inspector of anticipated readiness and start up of UAl dissolution system for the week of November 30, 2009. The Resident Inspector had performed an inspection of actions that NFS had taken to prevent a re-occurrence of the process upset on October 13, 2009 and found no issues.
11/30/09		The Resident Inspector travels to Region II (RII) for the inspector counterpart meeting.
12/1/09		Resident Inspector communicates to RII management NFS' UAl start up plans.
12/1/09		RII management calls NFS to obtain more specific UAl restart dates. NFS safety management indicates that some restart activities have already begun (such as system rinsing). Subsequent calls clarify that no new material has been input into the system. Based on these communications with NRC, NFS places a hold on restart activities (which were expected to start on December 2, 2009) to provide NRC the opportunity to assess its readiness to restart UAl. RII management sends the Resident Inspector back to NFS to observe any potential UAl restart activities.

Date	Time	Activity
12/2/09	0800	RII management is briefed by the NFS vice-president (VP) on actions that NFS has taken to justify restart of the UAl process (and continued operations of other processes). The VP states that NFS had reviewed a subset of modification packages as old as two years to ensure that recent modifications had not compromised the safety basis of the UAl system. Subsequently, RII management begins mobilizing an inspection team to assess NFS' actions to justify restart, including whether NFS' review of modification packages was sufficient to provide assurance that the safety basis of the UAl system was sound.
12/2/09	1530	At RII management's request, the NFS VP and technical staff briefs the RII management and members of the anticipated inspection team that will be launched to review NFS' actions for restart. The NFS staff states that modifications packages were not reviewed (the VP apologized that he had misremembered the actions that the staff had taken). The NFS staff stated that they had taken a team of approximately eight individuals and reviewed the safety basis for four process areas they determined to be most vulnerable to the causes that led to the upset on October 13, 2009. One of the areas was the UAl process. They stated that no significant issues were discovered in their review of UAl. They did state that the tray dissolver in CDL that had not yet been operated. In addition, the NFS staff stated the new criteria for circumventing the initial CCB meeting. The NFS staff's reading of the new criteria appeared to document a concern for production that overrides the CCB's preliminary management review. NRC communicated its concern regarding such criteria that placed production over any sort of review. Subsequently, RII management confirms the decision to re-launch the majority of the team to evaluate NFS' actions in preparation for restart of UAl.
12/3/09		The team arrives at NFS and begins reviewing NFS' four safety basis reviews (which were called "Vertical Slices"). NFS informs the team that the procedure that implicated production over preliminary management reviews had been modified to ensure that only an immediate safety issue may warrant by-passing of the initial CCB review.
12/4/09		The team's inspection of NFS' Vertical Slices indicated that NFS had identified an issue with one of the four areas: the tray dissolver in CDL that had not yet been operated. NFS' review of the other areas had identified only minor issues that did not jeopardize its safety basis.

Date	Time	Activity
12/7/09		The team briefs NFS staff and management on potential issues identified with the effectiveness of IROFS BUA-43 and the potential need to identify addition controls as IROFS to support the safety basis for NOx generating accident sequences.
12/9/09		The NRC (DFFI Deputy Division Director) communicates concerns regarding foreign black material that had been discovered in a batch product from the oxide dissolution system.
12/9/09		The NFS VP commits to the NRC (DFFI Deputy Division Director) NFS' intent to identify any other procedures that may have proceduralized production over safety. In addition, NFS would be assessing the need to conduct additional Vertical Slices.
12/11/09		The team is briefed on NFS' latest actions to address NRC's concerns with consistency of material input. The NFS ISA staff informs the team that NFS is in the process of identifying two additional IROFS for processes generating NOx (the addition of peroxide and the control of material input amounts). NFS will also be considering identifying the ventilation system and the glass nitric acid knockout column as IROFS. In addition, the NFS VP stated that a memo was issued that restricted the input of material into BPF to only Dross and U-Metal (no fines or other untested material) until he specifically authorizes its input. The issues regarding the black material in the oxide dissolution system is explained to the team.

Representative Picture of UAL Alloy Fines

Damaged Off Gas Piping

UNITED STATES
NUCLEAR REGULATORY COMMISSION
REGION II
SAM NUNN ATLANTA FEDERAL CENTER
61 FORSYTH STREET, SW, SUITE 23T85
ATLANTA, GEORGIA 30303-8931

MEMORANDUM TO: George Hopper, Team Leader
Nuclear Fuel Services Augmented Inspection Team

FROM: Luis A. Reyes, Regional Administrator ***/RA/***

SUBJECT: AUGMENTED INSPECTION TEAM CHARTER FOR NUCLEAR FUEL SERVICES, DOCKET NO. 70-143 (INSPECTION REPORT NO. 70-143/2009-011)

This memorandum confirms the establishment of an Augmented Inspection Team at Nuclear Fuel Services to inspect all pertinent aspects of the process upset at the Blended Low Enriched Uranium Process Facility on October 13, 2009. This event involved the generation of excessive heat and nitrogen compound gases (NOx) in the centrifuge bowl cleaning station and subsequent damage to the wet off-gas system process piping. The enclosed Augmented Inspection Team charter replaces the Special Inspection Team charter dated October 16, 2009 which was established to examine the facts and circumstances of the October 13, 2009 event. You are the inspection team leader and should report your status directly to me. Steve Subosits, Omar Lopez, Leonard Pitts, Al Gooden and Tim Chandler are assigned as members of the team to assist in completing the objectives of the Charter.

The inspection and report will be performed in accordance with the provisions of Inspection Procedures 93800 and 88020, and will be consistent with Management Directive 8.3 and Manual Chapter 2600. The report will be issued within 30 days of the completion of the inspection.

The objectives of the inspection are to gather information and make appropriate findings and conclusions in the areas listed in the Charter. These results will be used as a basis for any necessary follow-up action.

Docket No. 70-143
License No. SNM-124

Enclosure: As stated

CONTACT: Manuel Crespo, RII/DFFI
404-562-4733

Joseph Shea, RII/DFFI
404-562-4700

Augmented Inspection Team Charter
Nuclear Fuel Services (NFS) Bowl Cleaning Station Process Upset

Event

On October 12, 2009 NFS finalized its procedures for chemical processing of fines/scrap material in the centrifuge bowl cleaning station. NFS' laboratory had analyzed the fines/scrap to determine the procedure modifications necessary to process this material. The nitric acid dissolution of the first batch of material (performed in Bowl Cleaning Station #2) did not proceed according to expectations.

On October 13, 2009 upon addition of nitric acid into the bowl cleaning system (which re-circulates the solution from the bowl to a wash column), the solution began producing unexpectedly high levels of off-gases (i.e. the solution was bubbling far more than normal). The operator shut down the station recirculation pump and shut off the heaters. However, the solution continued to heat up and produced nitrogen compound gases (NOx). These gases triggered the NOx detectors at the air gap of the nitric acid knockout column, which prompted an evacuation of the building. In addition, the heated gases deformed the wet off-gas piping system for the bowl cleaning station and the nitric acid knockout column.

The reaction that generated the excessive NOx gas appeared to proceed to completion within the next few hours. Afterwards, a safety re-entry team determined that the atmosphere of the building had returned to safe levels. Processes involving the nitric acid knockout column were shutdown.

On October 19, 2009 NFS submitted a report to the NRC (Event Notification 45446) pursuant to Title 10, Code of Federal Regulations, Part 70, Appendix A. The report stated in part:

> "Laboratory analysis of similar U-Al [uranium aluminum] fines material was conducted October 14-October 16. It behaved in the laboratory in the same manner as what was observed during the operational event. Based on the lab testing, a NOx generation rate specific for the fines material was estimated. Based on engineering calculation, it was determined that the NOx generation for the fines was significantly higher than the previously analyzed NOx generation for the U-Al ingots. The previous Nox evaluation for the U-Al Bowl Cleaning station resulted in an intermediate occupational consequence. Using the generation rate specific for the fines results in high occupational consequences."

Objectives

The objectives of the inspection are to: 1) evaluate the licensee's decision-making process regarding equipment and procedure modifications that occurred prior to the October 13, 2009 upset; 2) evaluate the licensee's decision-making process regarding the response and

investigation of the upset; and 3) evaluate the licensee's basis for immediate and long term corrective actions to prevent recurrence. To accomplish these objectives, the following tasks will be completed.

1. Develop a complete sequence of events related to this operational upset.

2. Evaluate the licensee's use of its decision-making process involved in any equipment or procedural modifications and associated evaluations that were performed prior to the processing of the fines/scrap material.

3. Identify and evaluate the effectiveness of the immediate corrective actions taken by the licensee in response to the upset, including the decision-making process used to determine response and recovery activities.

4. Independently assess the adequacy of the licensee's decision making involved in (a) any equipment or procedural modifications and associated evaluations that were performed prior to the processing of the fines/scrap material, (b) response during the event and (c) recovery and process restart planning.

5. Evaluate the licensee's implementation of the facility emergency plan and associated procedures for this event.

6. Determine the adequacy of internal and external licensee upset reporting decisions.

7. Evaluate the licensee's root cause analysis and determine if the licensee's review adequately identified the factors that led to the upset. Evaluate the licensee's extent of condition and extent of cause analyses.

8. Evaluate the actual and potential safety significance to workers, the public, and the environment.

9. Evaluate the adequacy of the licensee's integrated safety analysis and corrective actions to ensure that the performance requirements are met for this and related accident scenarios

10. Independently determine the probable root and contributing causes of the upset, and independently conduct an extent of condition and extent of cause evaluation.

11. Determine the adequacy of the licensee's planned actions to prevent recurrence

<u>Documentation</u>

Document the inspection findings and conclusions in an inspection report within 30 days of the completion of the inspection.