Kidde Fenwal

September 17, 2004

Ms. Marissa Bailey
M.S. T-5F5
U.S. Nuclear Regulatory Commission
11555 Rockville Pike
Rockville, MD 20852

Subject: Amendment to NRC Registration Certificate No: NR-0668-D-101-E and Exempt Distribution License No. 20-15285-03E

Dear Ms. Bailey,

This is a request to have our NRC Registration Certificate No: NR-0668-D-101-E and Exempt Distribution License No. 20-15285-03E amended to add our new Model CPD-7054 ionization smoke detector.

This new Model CPD-7054 uses the same Americium – 241 source, Model No. AMM-1001H, that is currently used in our Model CPD-7051 ionization smoke detector, which has 0.8 microcuries of radioactivity and is manufactured by AEA Technology plc.

Attached are two copies of a description, which identifies the differences between this new construction assembly and our current assembly, (per NUREG –1556, Vol.3, Sec. 10 requirements) and copies of the drawings for our new assembly. I have also enclosed marked-up copies of the Registration Certificate and Exempt Distribution License for your reference.

Please review this information and let me know if there is anything else that you will need to amend this Registration Certificate and Exempt Distribution License. Thank you for your help, if you have any questions concerning this subject, please contact me.

Regards,

Terry Garland

Terry Garland
Manager, D&A
Project Development
Phone: 508 881-2000 (Ext. 2364)
Fax: 508 231-2015
e-mail: terrill.garland@kidde-fenwal.com

Enclosures

Cc: Chris Mousseau, K-F RSO

LtrReg Cert Amend NR-0668-D-101-E.doc

Kidde Fenwal
400 Main Street
Ashland, MA 01721

Tel (508) 881-2000
Fax (508) 881-8920
www.kidde-fenwal.com

B-32

REGISTRY OF RADIOACTIVE SEALED SOURCES AND DEVICES
SAFETY EVALUATION OF DEVICE
(AMENDED IN ITS ENTIRETY)

NO.: NR-0668-D-101-E DATE: January 30, 2004

DEVICE TYPE: Smoke Detector

MODEL: CPD 7051, ~~and~~ 7052, and 7054

DISTRIBUTOR:

Kidde Fenwal
400 Main Street
Ashland, MA 01721

MANUFACTURERS:

For Model CPD 7051, and CPD 7054:
Nohmi Bosai, Ltd.
7-3 Kudan Minami, 4-Chome
Chiyoda-bu Tokyo 102, Japan

For Model CPD 7052:
Kidde Fenwal
400 Main Street
Ashland, MA 01721

SEALED SOURCE MODEL DESIGNATION:

AEA Technology plc AMM.1001H
NRD A-001 (Model CPD 7052 only)

ISOTOPE:

Americium-241

MAXIMUM ACTIVITY:

0.7 microcurie (25.9 kBq) (NRD A-001)
0.8 microcurie (29.6 kBq) (AEA AMM.1001H)

LEAK TEST FREQUENCY: Not required

PRINCIPAL USE: (P) Ion Chamber Smoke Detector

CUSTOM DEVICE: _____ YES ___X___ NO

REGISTRY OF RADIOACTIVE SEALED SOURCES AND DEVICES
SAFETY EVALUATION OF DEVICE
(AMENDED IN ITS ENTIRETY)

DEVICE TYPE: Smoke Detector

DESCRIPTION:

The Model CPD 7051 and CPD-7054 are ~~is a~~ dual chamber type smoke detectors that contain~~s~~ one AEA AMM.1001H source of 0.8 microcurie (29.6 kBq) per detector. These CPD 7051 and CPD 7054 Models are manufactured in Japan, and are distributed by Kidde Fenwal.

The Model CPD 7052 is also a dual chamber type smoke detector that contains one NRD A-001 source of 0.7 microcurie (25.4 kBq) or one AEA AMM.1001H source of 0.8 microcurie (29.6 kBq) per detector. These CPD 7052 Models are manufactured in Ashland, MA.

The source assembly is the source foil mounted to a 300 Series stainless steel plate and is champed by a 300 Series stainless steel source cover which has three integrally formed tabs which are mechanically folded over the back of the source plate and source cover. A threaded stud which is a part of and located beneath the source plate is then passed through the polycarbonate support plate and the printed circuit board and secured with a washer - lock nut thus forming secondary and tertiary protection above the source assembly.

REGISTRY OF RADIOACTIVE SEALED SOURCES AND DEVICES
SAFETY EVALUATION OF DEVICE
(AMENDED IN ITS ENTIRETY)

DEVICE TYPE: Smoke Detector

REFERENCES:

The following supporting documents for the Models CPD 7051, and 7054 7052 smoke detectors are hereby incorporated by reference and are made a part of this registry document.

- This registry sheet was originally compiled from information contained in License No. 20-15285-02E
- Kidde Fenwal, Inc.' letter dated November 27, 1991, with enclosures thereto.
- Kidde Fenwal, Inc.' letter dated December 13, 1991.
- Kidde Fenwal, Inc.' letter dated April 1, 1992, with enclosures thereto.
- Kidde Fenwal, Inc.' letters dated March 23, 2002, and May 13, 2002, with enclosures thereto.
- Kidde Fenwal, Inc.' letter dated July 24, 2003, with enclosures thereto.

ISSUING AGENCY:

U.S. Nuclear Regulatory Commission

Date: January 30, 2004 Reviewer: John P. Jankovich

Date: January 30, 2004 Concurrence: Ujagar S. Bhachu

NRC FORM 374

U.S. NUCLEAR REGULATORY COMMISSION

Amendment No. 05

MATERIALS LICENSE

Pursuant to the Atomic Energy Act of 1954, as amended, the Energy Reorganization Act of 1974 (Public Law 93-438), and Title 10, Code of Federal Regulations, Chapter I, Parts 30, 31, 32, 33, 34, 35, 36, 39, 40, and 70, and in reliance on statements and representations heretofore made by the licensee, a license is hereby issued authorizing the licensee to receive, acquire, possess, and transfer byproduct, source, and special nuclear material designated below; to use such material for the purpose(s) and at the place(s) designated below; to deliver or transfer such material to persons authorized to receive it in accordance with the regulations of the applicable Part(s). This license shall be deemed to contain the conditions specified in Section 183 of the Atomic Energy Act of 1954, as amended, and is subject to all applicable rules, regulations, and orders of the Nuclear Regulatory Commission now or hereafter in effect and to any conditions specified below.

Licensee	In accordance with application dated July 24, 2003,
1. Kidde-Fenwal, Inc.	3. License number 20-15285-03E is amended in its entirety to read as follows:
2. 400 Main Street Ashland, Massachusetts 01721	4. Expiration date March 31, 2012
	5. Docket No. 030-32498 Reference No.

6. Byproduct, source, and/or special nuclear material	7. Chemical and/or physical form	8. Maximum amount that licensee may possess at any one time under this license
A. Americium-241	A. Foil sources (Nuclear Radiation Development Model AMM-1001H, AEA Technology plc Model AMM-1001H)	A. Not Applicable (See Condition 11)

9. Authorized use:

Pursuant to Section 32.26, 10 CFR Part 32, the licensee is authorized to distribute smoke detector devices specified in Condition 10 to persons exempt from the requirements for a license pursuant to Section 30.20, 10 CFR Part 30, or equivalent provisions of the regulations of any Agreement State.

CONDITIONS

10. The following smoke detector devices may be distributed pursuant to this license provided the amount of Americium-241 contained in the device does not exceed the amounts specified in the following table:

Device Model	Maximum Quantity per Device
CPD-7051 and CPD-7054	0.8 microcuries (AEA Model AMM-1001H)
CPD-7052	0.8 microcuries (AEA Model AMM-1001H) or 0.7 microcuries (NRD Model A-001)

11. This license does not authorize possession or use of licensed material.

12. The licensee may distribute only from its facility located at 400 Main Street, Ashland, Massachusetts.

MATERIALS LICENSE
SUPPLEMENTARY SHEET

License Number
20-15285-03E

Docket or Reference Number
030-32498

Amendment No. 05

CONDITIONS

(Continued)

13. The licensee shall file periodic reports as specified in Section 32.29(c), 10 CFR Part 32.

14. Except as specifically provided otherwise by this license, the licensee shall conduct its program in accordance with the statements, representations and procedures contained in the documents, including any enclosures, listed below. The Nuclear Regulatory Commission's regulations shall govern unless the statements, representations, and procedures in the licensee's application and correspondence are more restrictive than the regulations.

    A. Letter dated November 27, 1991;
    B. Letter dated December 9, 1991;
    C. Letter dated May 27, 1992;
    D. Letter and application dated August 14, 1992;
    E. Letter dated August 24, 1992;
    F. Letter dated October 6, 1992;
    G. Letter dated February 28, 1994 with enclosure;
    H Facsimile dated April 8, 1994;
    I Facsimile dated July 29, 1997;
    J. Registry No. NR-0668-D101-E
    K. Application dated August 22, 2001;
    L. Letter dated November 7, 2001;
    M. Electronic mail dated March 15, 2002;
    N. Letter dated March 23, 2002; and
    O. Letter dated July 24, 2003.

FOR THE U.S. NUCLEAR REGULATORY COMMISSION

DATE: January 30, 2004

BY: Anthony S. Kirkwood

Anthony S. Kirkwood
Materials Safety and Inspection Branch
Division of Industrial and
Medical Nuclear Safety
Office of Nuclear Material Safety
and Safeguards
Washington, D.C. 20555

NRC Registration Certificate No. 20-15285-03E and Exempt Distribution License No. 20-1528-03E
Amendment Request Description to Add CPD-7054 per NUREG – 1556, Vol. 3, Sec. 10

10.1 Summary Information

10.1.1 Manufacturer and Distributor – No change, the manufacturer, Nohmi Bosai, Ltd. of Japan, and the distributor, Kidde-Fenwal, Inc. of Ashland MA, remain the same.

10.1.2 Custom User – No change, does not apply.

10.1.3 Other Companies Involved – No change, no other companies involved.

10.1.4 Model Number, Sealed Source and Principal Use Code – The sealed source is AEA Technology plc, (previously known as Amersham Corp.) Model AMM – 1001H, which is used in our current CPD-7051 detector. No change in the principal use code which remains at "P". (See attached Appendix A, Description of Radioactive Source.)

10.1.5 Radionuclides Used in the Product – Sealed source is Americium 241, which is the same as the current one, and is 0.8 microcuries.

10.1.6 Leak Test Frequency – No change, not required.

10.2 Conditions of Use – No change, smoke detectors are primarily installed in commercial and industrial installations.

10.3 Construction of the Product – The new assembly construction remains basically the same as the current version. (See attached Appendix B, Construction Details and assembly drawings.)

10.4 Labeling – The labeling information on the new assembly construction remains basically the same as the current version. (See attached Appendix C, copies of labels.)

10.5 Prototype Testing – The dose rate measurements, temperature test and drop test were performed on the new assembly construction units by the Japan Radioisotope Association. The results of these tests indicate that even when the device is subjected to significantly greater abuse than would be expected in normal use, the device effectively retains and shields the radioactive material. (See attached Appendix D, Test Report.)

The CPD-7054 assembly construction will be UL Listed the same as the current unit is.

10.6 Radiation Profiles - The dose rate measurements were performed on the new assembly construction units by the Japan Radioisotope Association. (See attached Appendix D, Test Report.)

10.7 Quality Control and Quality Assurance – No change, same as current units.

10.8 Installation, Servicing, and Instructions to Users – The installation and servicing instructions shipped with the current units are being updated to include the new Model CPD-7054 detector. (See attached Appendix E, copy of updated installation and servicing instructions)

Appendix A

DESCRIPTION OF RADIOACTIVE SOURCE

No	Items	Ionization Smoke Detector Model:CPD-7054
1	Application	Ionization Smoke Detector
2	Smoke Detector ・Manufacturer ・Model Number	 NOHMI BOSAI LTD. 7-3, Kudan Minami 4-home Chiyoda-ku Tokyo 102-8277, Japan Model : CPD-7054
3	Radioactive Source ・Manufacturer ・Model Number ・Product Code	 AEA Technology plc Harwell,Oxfordshire,England AMM.1001H AMMK7544
4	Characteristics of Radioactive Source ・Material ・Activity ・Chemical form ・Physical form	 Americium 241 (Hermetically sealed) 0.8 microcurie (29.6kBq) Americium oxid (AmO_2) Refer to"Certificate of Approval of Design for Special Form Radioactive Material"
5	Number of source per Detector	1 Piece
6	Mounting	Radioactive Source is loaded into a holder. Refer to "Certificate of Approval of Design for Special Form Radioactive Material"
7	Details of securement of Radioactive Source As refer to Certificate of Approval of Design for Special Form Radioactive Material, the source is loaded into a holder, fixed to the printed wiring board together with the support plate, and housed in the outer chamber. As can be seen from DETECTOR ASSEMBLY DWG. NO. AF30404100 / CHAMBER ASSEMBLY DWG. NO. AF30404198, the whole source is completely shielded with the metallic outer chamber and the printed wiring board so that the source can not be readily disassembled nor touched with finger. Maximum external radiation levels measured at distances of 5 and 25cm away from any external surface of the detector are 0.044 μSv/h(0.0044 mrem/h) and 0.002 μSv/h(0.0002 mrem/h) respectively. For more detailed test data on the detector, please refer to the TEST REPORT. The detector cannot be removed from the base without using the special tool, and an alarm is indicated on the control panel when the detector is removed from the base.	

P196361

REV	REVISION DESCRIPTION	DATE	ECN	APPROVED
A	DIMENSION ERROR CORRECTED.	26MAY87	0660	
	0.353/0.347 WAS 0.253/0.247			
B	0.353/0.345 WAS 0.353/0.347	10JUN87	0677	
C	0.195/0.197 WAS 0.193/0.190	10JUN87	0677	
	"ACTIVE SOC" NOTE ADDED.	10JUN87		
D	0.053 WAS 0.052	15JUN87	0677	
E	ITEM NO., DESCRIPTION, ETC. ADDED.	24FEB00	0767	

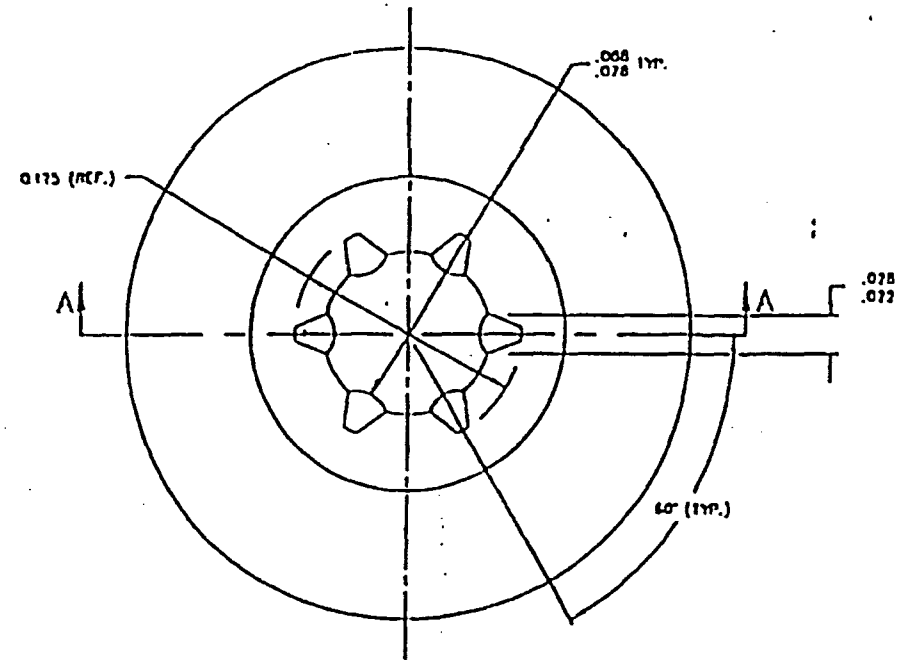

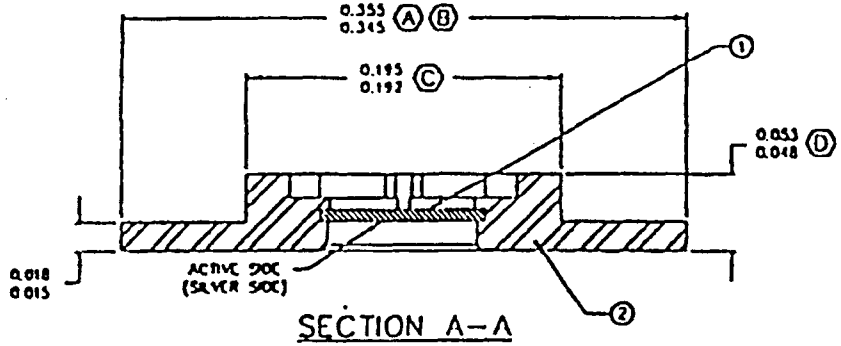

SECTION A–A

COPY

Ⓔ

ITEM	DESCRIPTION	DWG. NO.	MATERIAL	REQ'D
2	Holder, Part Number 196310	P196310	stainless steel	1
1	Amersham - 211 Source Ass, AMM05577	3481077	components	1

USED ON	N/A	PART NO.	196361
MATERIAL	STAINLESS STEEL	PROJ. NO.	N/A
FINISH	N/A		
SUR. ROUGH			

UNLESS NOTED OTHERWISE
REMOVE ALL BURRS AND SHARP EDGES
DO NOT SCALE
ALL DIMENSIONS IN INCHES

TOLERANCES
FRAC ± 1/32
.X ± 0.010
.XX ± 0.010
.XXX ± 0.005
ANG. ± 1/2°

SCALE NONE

	BY	DATE
DESIGN	UJC	25Sep86
DRAWN	CWS	14Oct86
ENGR	TKE	17Oct86
MFG APPROV	NA	NA
QUALITY APPROV	UJC	17Oct86
ENGR APPROV	KEM	17Oct86

AMERSHAM CORPORATION
2636 S. Clearbrook Dr.
Arlington Heights, IL 60005
(312) 593-6300

Amersham

TITLE
G.A. of Source Assembly 196361

THIS DRAWING IS THE PRIVATE AND CONFIDENTIAL PROPERTY OF AMERSHAM CORPORATION AND MUST NOT BE LOANED, COPIED, OR REPRODUCED WITHOUT WRITTEN PERMISSION.

SIZE C | SHEET 1 OF 1
DWG. NO. P196361 | REV. C

MS15-010a APP.B-1/4

DRG NO. 3A61472

NOTES:

1. ACTIVE MATERIAL: AMERICIUM 241
2. ACTIVITY: 29.6 kBq (0.8μCi) ± 20%
3. PEAK ENERGY LEVEL: 4.5 MeV ± 10%

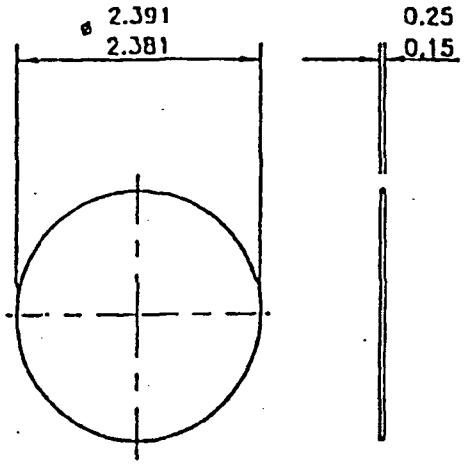

FOIL DISC BLANKED FROM ROLLED SHEET

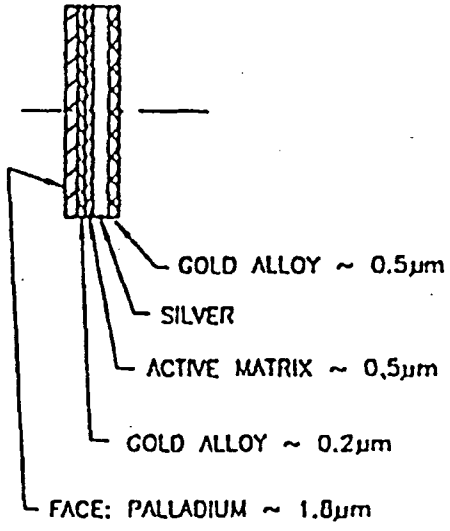

ENLARGED SECTION THR'O FOIL

FOR REFERENCE ONLY 15.10.97

TOLERANCES	MATERIAL	GENERAL NOTES	SCALE 5:1	E	DCR3794	2.1.96	C.D.W.				
—	—	THIRD ANGLE PROJECTION		ISSUE	MOD No.	DATE	DRAWN	CHECKED	APPROVED	QA APPROVED	
UNLESS OTHERWISE STATED		MODIFICATIONS INDICATED BY ISSUE NO. THIS DRAWING CONFORMS TO BS308. ALL DIMENSIONS IN MILLIMETRES UNLESS OTHERWISE STATED. DO NOT SCALE									
SURFACE TEXTURE	FINISH										
—	—										
UNLESS OTHERWISE STATED	REMOVE ALL BURRS	APPROVAL THIS DRAWING IS NOT TO BE USED FOR ANY PURPOSE UNLESS SIGNED AS APPROVED	USED ON —	SHT. SIZE A3	DRG NO. 3A61472					SHT 1 OF SHTS 1	

THIS DOCUMENT INCLUDING THE COPYRIGHT THEREIN IS THE EXCLUSIVE PROPERTY OF AMERSHAM INTERNATIONAL PLC. AMERSHAM UK, IT MAY ONLY BE USED FOR THE PURPOSE FOR WHICH IT WAS ISSUED, IT MAY NOT BE DUPLICATED IN ANY WAY, NOR TRANSMITTED TO ANY THIRD PARTY WITHOUT THE EXPRESS PERMISSION OF AMERSHAM INTERNATIONAL PLC.

© Amersham The Health Science Group

TITLE ALPHA FOIL DISC AMMK6045, AMMK4021 & AMMQ6527

Amersham International plc
Amersham Laboratories
White Lion Road Amersham
Buckinghamshire England HP7 9LL

telephone (0494) 544000
cables Activity Amersham telex
telex 83141 ACTIVAG
fax (0494) 543583

CERTIFICATE OF RADIOACTIVE SOURCE INTEGRITY

Title : Alpha Foil Disc in I.C.S.D. Holder

Assembly code : P288210 (Amersham Corporation)

Assembly drawing : P196361 (Amersham Corporation)

Nuclide : Americium-241 (Am-241)

Radiotoxicity group : A

Maximum activity : 37 kBq (1 uCi)

CLASSIFICATION : BS/ISO/ANSI 77 C64444 (Assessed)

RECOMMENDED WORKING LIFE : 10 Years

Test sources : No tests were performed. This assessed classification is based on experimental data obtained for foils of similar construction to that used in this design, see QCS 600.

Tests carried out in accordance with:

Leak test method	Temperature	Pressure	Impact	Vibration	Puncture	Units

Production Manager

Date 27 April 1992

QA Manager

Date 27/4/92

Q.C.
AUTHENTICATED

Amersham International plc
Amersham Laboratories
White Lion Road Amersham
Buckinghamshire England HP7 9LL

telephone (0494) 544000
cables Activity Amersham telex
telex 83141 ACTIVAG
fax (0494) 543588

CERTIFICATE OF RADIOACTIVE SOURCE INTEGRITY

Title : Alpha Foil Disc in I.C.S.D. Holder

Assembly code : 196361 (Amersham Corporation)

Assembly drawing : P196361 (Amersham Corporation)

Nuclide : Americium-241 (Am-241)

Radiotoxicity group : A

Maximum activity : 37 kBq (1.0 uCi)

CLASSIFICATION : SPECIAL FORM TEST DATA

RECOMMENDED WORKING LIFE : 10 Years

Test sources : 30 off active sources, serial numbered B1 to B30 inclusive, each containing 0.9 microcuries of Americium-241 in a metal foil disc. Assembled as in drawing number P196361 revision E.

Tests carried out in accordance with : IAEA SAFETY SERIES No.6 1985

Leak test method	Impact	Percussion		Temperature		Units
S.S. No 6 Para 612.(c)	PASS 0.13	PASS 0.18		PASS 0.32		nanocuries
S.S. No 6 Para 612.(f)	PASS 0.14	PASS 0.13		PASS 0.15		nanocuries

NOTE: 10 sources were subjected to each test, the leak test results quoted are the sum of all 10 leak test results.

Production Manager

Date 14/2/92

QA Manager

Date 14/2/92

Appendix B

CONSTRUCTION DETAILS

Refer to DETECTOR ASSEMBLY DWG.NO.AF30404100

1. LOWER ENCLOSURE - Component Recognized plastic (QMFZ2) by UL, PC/ABS Polymer Alloy Designated "Multilon", NO.TN-3616Q, rated 94V-0, manufactured by TEIJIN CHEMICALS LTD.
   Refer to DWG.NO.AF20404101.

2. COVER - Same material as item 1.
   Refer to DWG.NO.AF30404102.

3. WIND SCREEN - Same material as item 1.
   Fits in the printed wiring board. Refer to DWG.NO.AF30404103.

4. SUPPORT PLATE - Component Recognized plastic (QMFZ2) by UL, PC/ABS Polymer Alloy Designated "Iupilon", NO.PM2220, rated 94V-0, manufactured by MITSUBISHI ENGINEERING-PLASTIC CORP.
   Refer to DWG.NO.AF30404001.

5. OUTER CHAMBER - Stainless steel plate. Approximate overall dimensions 43.2mm ID at bottom, 34mm ID at top, 20.5mm high, Nominally 0.3mm thick. With 12 smoke entry openings Approx 4.5mm by 7.0mm on cover side.
   Refer to DWG.NO.CF30401005.

6. INTERMEDIATE ELECTRODE - Stainless steel plate. Approximate overall dimensions 27mm OD, 6.2mm high, nominally 0.3mm thick.
   Refer to DWG.NO.CF40401010.

7. SOURCE - Americium 241 (hermetically sealed)

Manufacturer	AEA Technology plc. Harwell,Oxfordshire,England
Product Code	AMMK 7544
Source Dimension	Overall ϕ2.381~ϕ2.391
Radioactivity	0.8 microcurie (29.6kBq)
Number of source (per detector)	1 piece

As refer to Certificate of Approval of Design for Special Form Radioactive Material, the source is loaded into a holder, fixed to the printed wiring board together with the support plate, and housed in the outer chamber.
As can be seen from DETECTOR ASSEMBLY DWG. NO. AF30404100 / CHAMBER ASSEMBLY DWG. NO. AF30404198, the whole source is completely shielded with the metallic outer chamber and shield case so that the source can not be readily disassembled nor touched with finger.

8. SCREW - Brass, M3X15, Ni plated, four provided.
With spring lock and plain washers.

9. INSECT SCREEN - Stainless steel screen, fits in item 5.
Refer to DWG.NO.CF30401009.

10. SPRING - Stainless steel spring. Approximate overall dimensions 7.2mm O.D. 9.0mm high, nominally 0.8mm thick.
Refer to DWG.NO.AF40404003.

11. INFRA RED LED - Built-in type.

12. INDICATING LED - Built-in type.

13. FET - Refer to ELECTRICAL PARTS LIST(Q1).

14. PRINTED WIRING BOARD - Component Recognized(ZPMV2)
NO.YS-114, maximum solder bath temperature and time limits are not to be exceeded, Has a minimum flame class 94V-0. Refer to DWG.NO.SF30404111 and SF40404112 for Marking and Circuit Patterns information.

15. SCREW - Steel, Zn plated

16. SCREW - Steel, Zn plated

17. CONTACT BLADE - Brass, Zn-Sn alloying plated, four provided.
Nominally 1.0mm thick.

18. NAME PLATE - POLYESTER
Refer to DWG.NO.AF40404104.

19. UL LABEL - U.L.I. APPROVED, TAMPERPROOF PRESSURE SENSITIVE PAPER.
Refer to DWG.NO.AF40400913c.

20. SEAL - POLYESTER

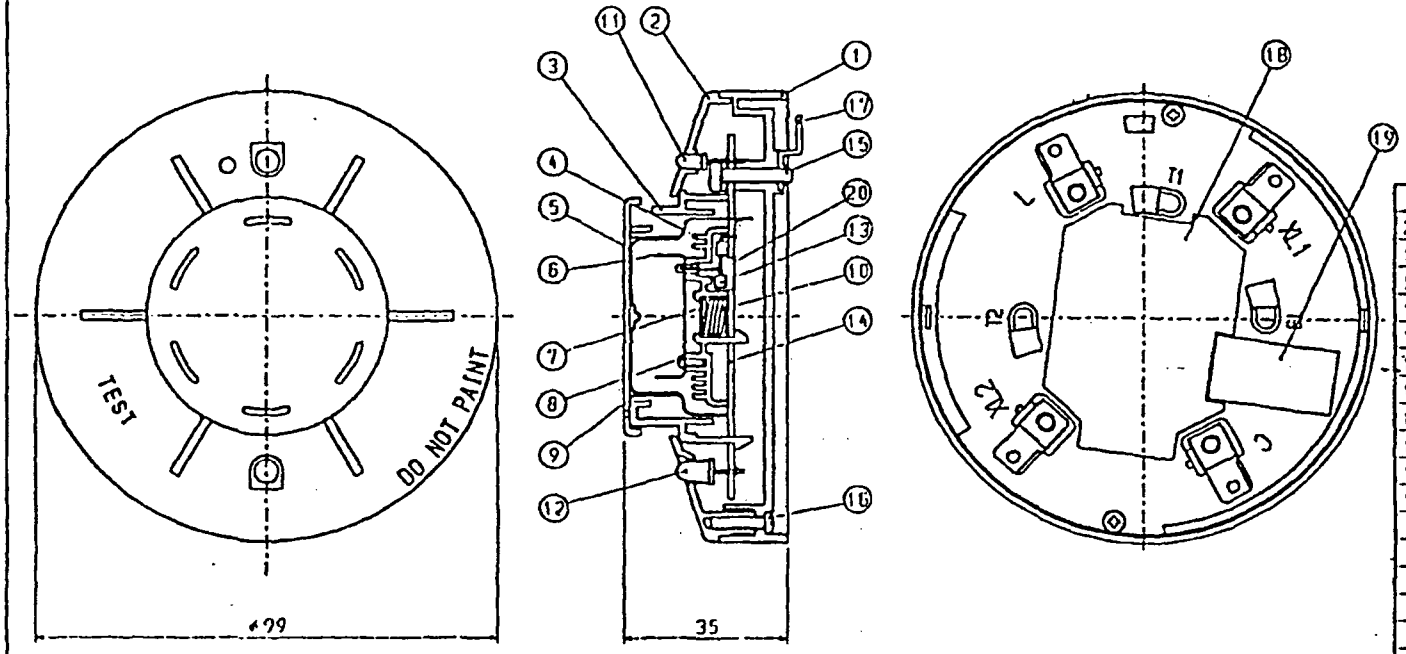

NO.	PARTS
20	SEAL
19	UL LABEL
18	NAME PLATE
17	CONTACT BLADE
16	SCREW
15	SCREW
14	PRINTED WIRING BOARD
13	FET
12	INDICATING LED
11	INFRA RED LED
10	SPRING
9	INSECT SCREEN
8	SCREW
7	SOURCE
6	INTERMEDIATE ELECTRODE
5	OUTER CHAMBER
4	SUPPORT PLATE
3	WIND SCREEN
2	COVER
1	LOWER ENCLOSURE

No.	DATE	DESCRIPTION	REV.	CHK.	APP.

UNLESS OTHERWISE SPECIFIED TOLERANCE:

≤10 ±0.5	
> 10..... 30 ±0.7	
> 30..... 70 ±1.0	
> 70.....150 ±1.2	
> 150.....300 ±1.5	
> 300.....500 ±2.0	
(UNIT: mm)	

ANGLE ±3°

UNIT: mm SCALE: 1 / 1

DATE: Feb. 24 2004

DESIGNED BY A. Okada

TRACED BY

CHECKED BY K. Kyumura

APPROVED BY K. Kyumura

TITLE: DETECTOR ASSEMBLY

IONIZATION SMOKE DETECTOR

DWG. NO. AF30404100

NOHMI BOSAI LTD.

<22602H>

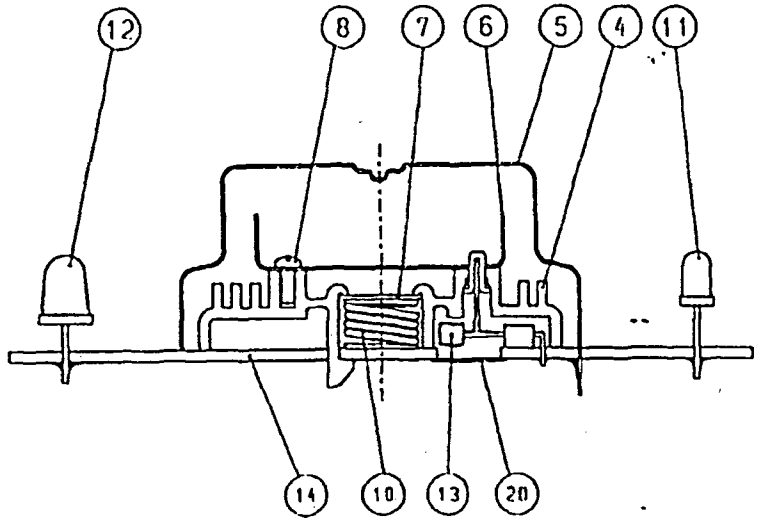

NO.	PARTS
20	SEAL
14	PRINTED WIRING BOARD
13	FET
12	INDICATING LED
11	INFRA RED LED
10	SPRING
8	SCREW
7	SOURCE
6	INTERMEDIATE ELECTRODE
5	OUTER CHAMBER
4	SUPPORT PLATE

No.	DATE	DESCRIPTION	REV.	CHK.	APP.

UNLESS OTHERWISE SPECIFIED TOLERANCE:

≤10	±0.5
> 10 30	±0.7
> 30 70	±1.0
> 70 150	±1.2
> 150 300	±1.5
> 300 500	±2.0

(UNIT: mm)

ANGLE ± 3°

UNIT: mm SCALE: 2 / 1

DATE: Feb 24 2004

DESIGNED BY: A. Okada

TRACED BY:

CHECKED BY: K. Kozanemaru

APPROVED BY: K. Kozanemaru

TITLE: CHAMBER ASSEMBRY

IONIZATION SMOKE DETECTOR

DWG. NO. AF30404198

NOHMI BOSAI LTD.

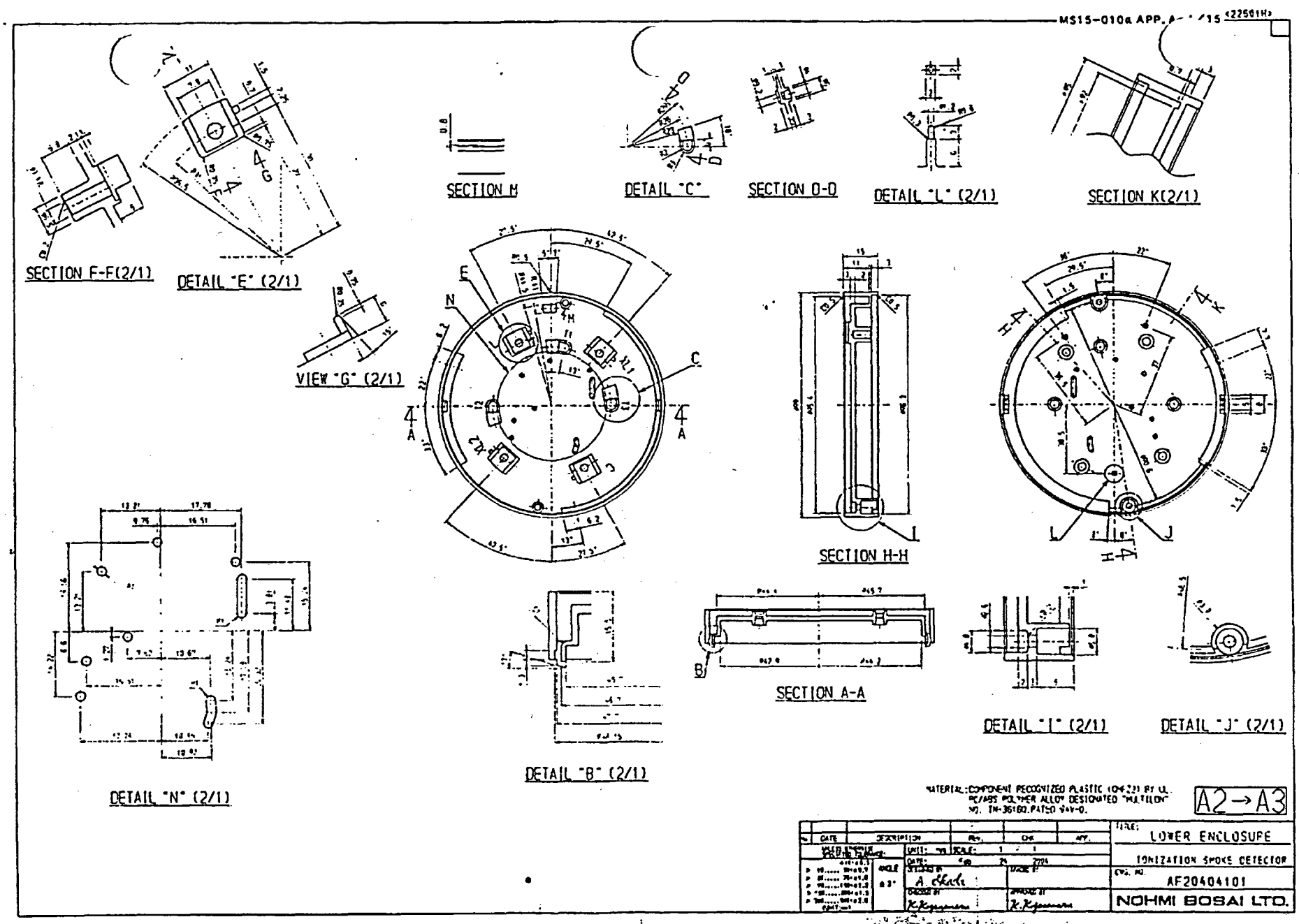
MS15-010a APP. A-1/15 <22501H>
SECTION F-F(2/1)
DETAIL "E" (2/1)
VIEW "G" (2/1)
SECTION M
DETAIL "C"
SECTION D-D
DETAIL "L" (2/1)
SECTION K(2/1)
SECTION H-H
SECTION A-A
DETAIL "I" (2/1)
DETAIL "J" (2/1)
DETAIL "N" (2/1)
DETAIL "B" (2/1)
MATERIAL: COMPONENT RECOGNIZED PLASTIC (OHEZ2) BY UL. PC/ABS POLYMER ALLOY DESIGNATED "MULTILON" NO. TN-36160, RATED 94V-0.
A2→A3
TITLE: LOWER ENCLOSURE
IONIZATION SMOKE DETECTOR
DWG. NO. AF20404101
NOHMI BOSAI LTD.

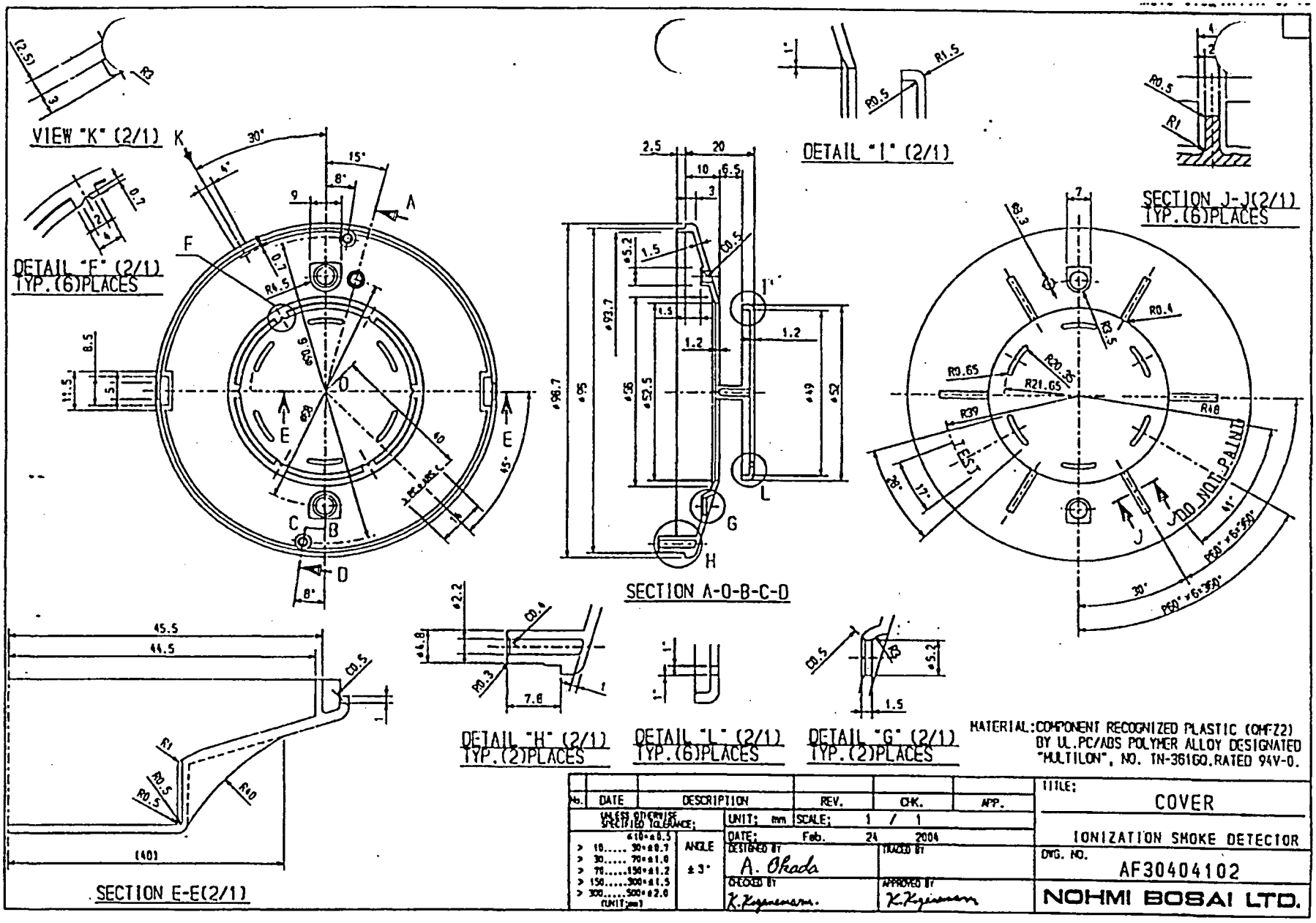
VIEW "K" (2/1)
DETAIL "F" (2/1)
TYP.(6)PLACES
DETAIL "I" (2/1)
SECTION J-J(2/1)
TYP.(6)PLACES
SECTION A-O-B-C-D
DETAIL "H" (2/1)
TYP.(2)PLACES
DETAIL "L" (2/1)
TYP.(6)PLACES
DETAIL "G" (2/1)
TYP.(2)PLACES
SECTION E-E(2/1)
DO NOT PAINT
MATERIAL:COMPONENT RECOGNIZED PLASTIC (OHFZ2)
BY UL.PC/ABS POLYMER ALLOY DESIGNATED
"HULTILON", NO. TN-36160.RATED 94V-0.
No. DATE DESCRIPTION REV. CHK. APP.
UNLESS OTHERWISE SPECIFIED TOLERANCE:
UNIT: mm SCALE: 1 / 1
DATE: Feb. 24 2004
DESIGNED BY A. Okada
TRACED BY
CHECKED BY K. Kojima
APPROVED BY K. Kojima
ANGLE ±3°
TITLE: COVER
IONIZATION SMOKE DETECTOR
DWG. NO. AF30404102
NOHMI BOSAI LTD.

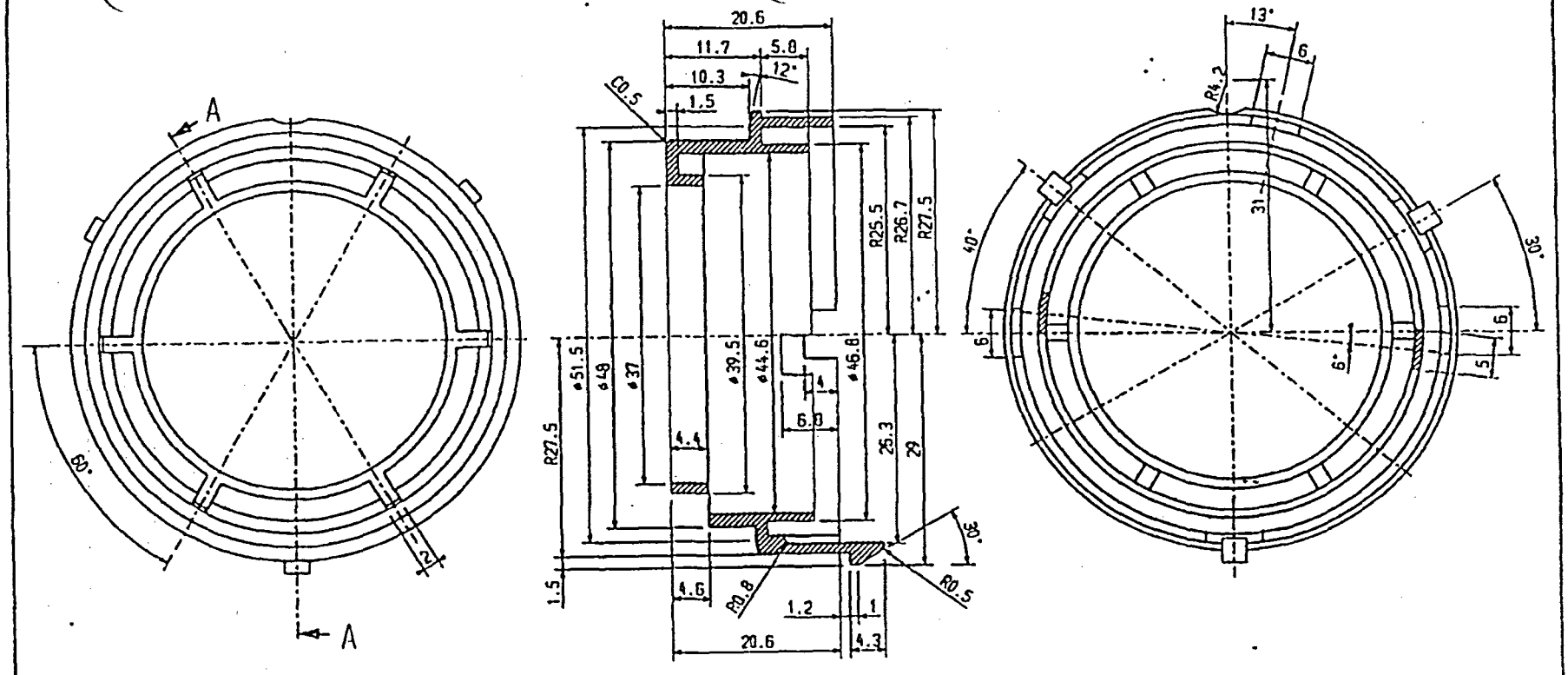

SECTION A-A

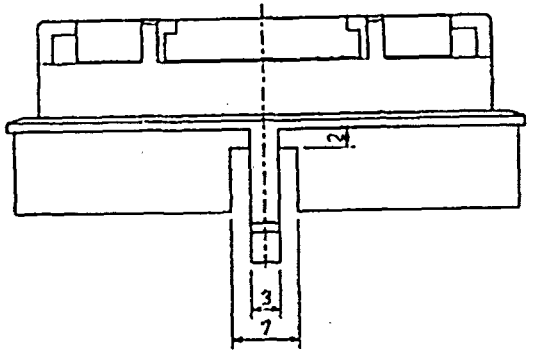

MATERIAL: COMPONENT RECOGNIZED PLASTIC (QMFZ2) BY UL.
PC/ABS POLYMER ALLOY DESIGNATED "MULTILON".
NO. TN-3G16Q.RATED 94V-0.

No.	DATE	DESCRIPTION	REV.	CHK.	APP.

UNLESS OTHERWISE SPECIFIED TOLERANCE:
≤10 ±0.5
> 10..... 30 ±0.7
> 30..... 70 ±1.0
> 70..... 150 ±1.2
> 150..... 300 ±1.5
> 300..... 900 ±2.0
(UNIT: mm)

ANGLE ±3°

UNIT: mm SCALE: 2 / 1
DATE: Feb. 24 2004
DESIGNED BY A. Okada
TRACED BY
CHECKED BY K. Kyoneman
APPROVED BY K. Kyoneman.

TITLE: WIND SCREEN
IONIZATION SMOKE DETECTOR
DWG. NO. AF30404103
NOHMI BOSAI LTD.

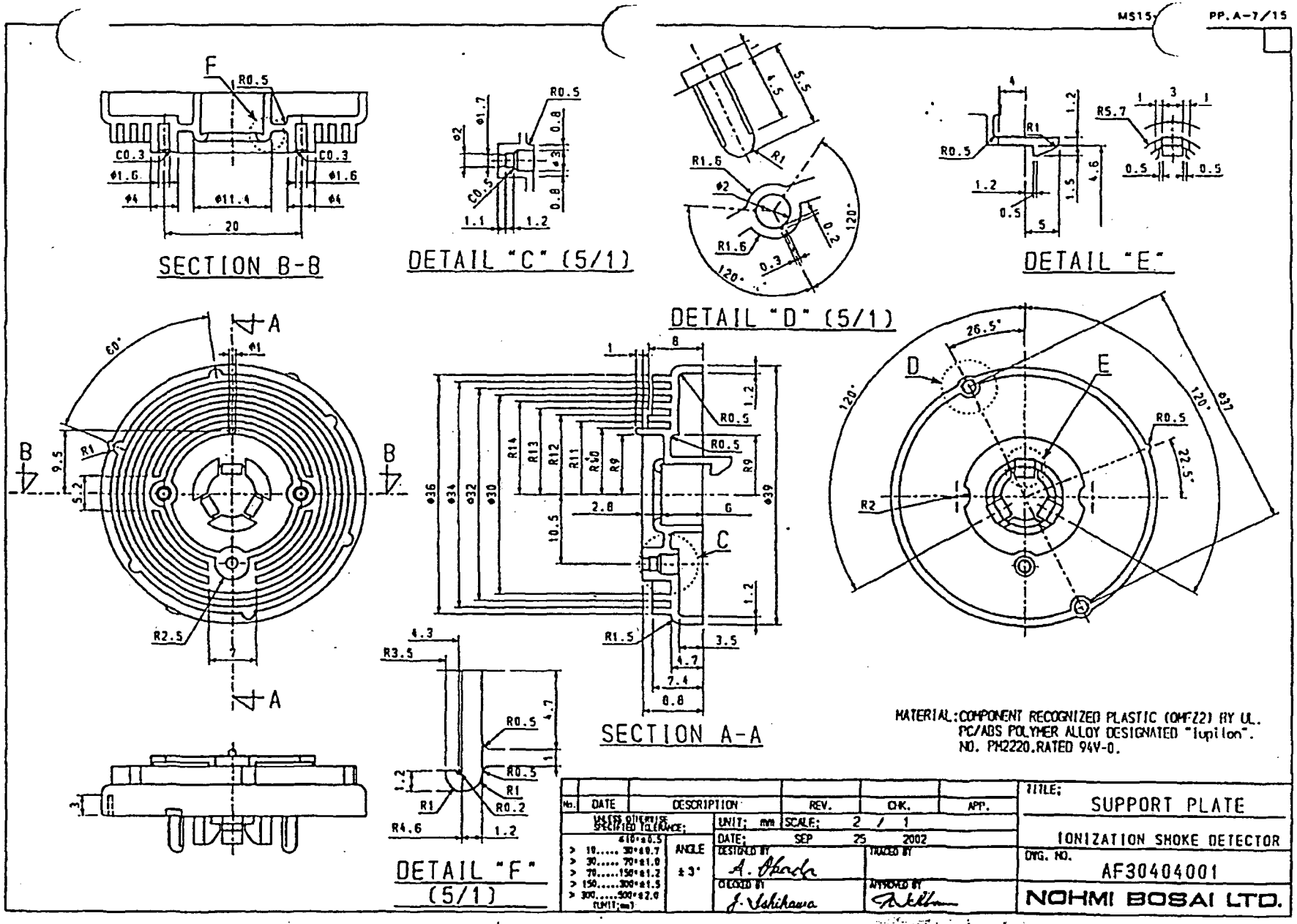
SECTION B-B
DETAIL "C" (5/1)
DETAIL "D" (5/1)
DETAIL "E"
SECTION A-A
DETAIL "F" (5/1)
MATERIAL:COMPONENT RECOGNIZED PLASTIC (OMFZ2) BY UL.
PC/ABS POLYMER ALLOY DESIGNATED "Iupilon".
NO. PH2220.RATED 94V-0.
No. DATE DESCRIPTION REV. CHK. APP.
UNLESS OTHERWISE SPECIFIED TOLERANCE:
UNIT: mm SCALE: 2 / 1
DATE: SEP 25 2002
ANGLE ±3°
DESIGNED BY A. Okada
CHECKED BY J. Ishikawa
TRACED BY
APPROVED BY
TITLE: SUPPORT PLATE
IONIZATION SMOKE DETECTOR
DWG. NO. AF30404001
NOHMI BOSAI LTD.

MATERIAL: STAINLESS STEEL PLATE
SUS 304, NOMINALLY 0.3 mm THICK

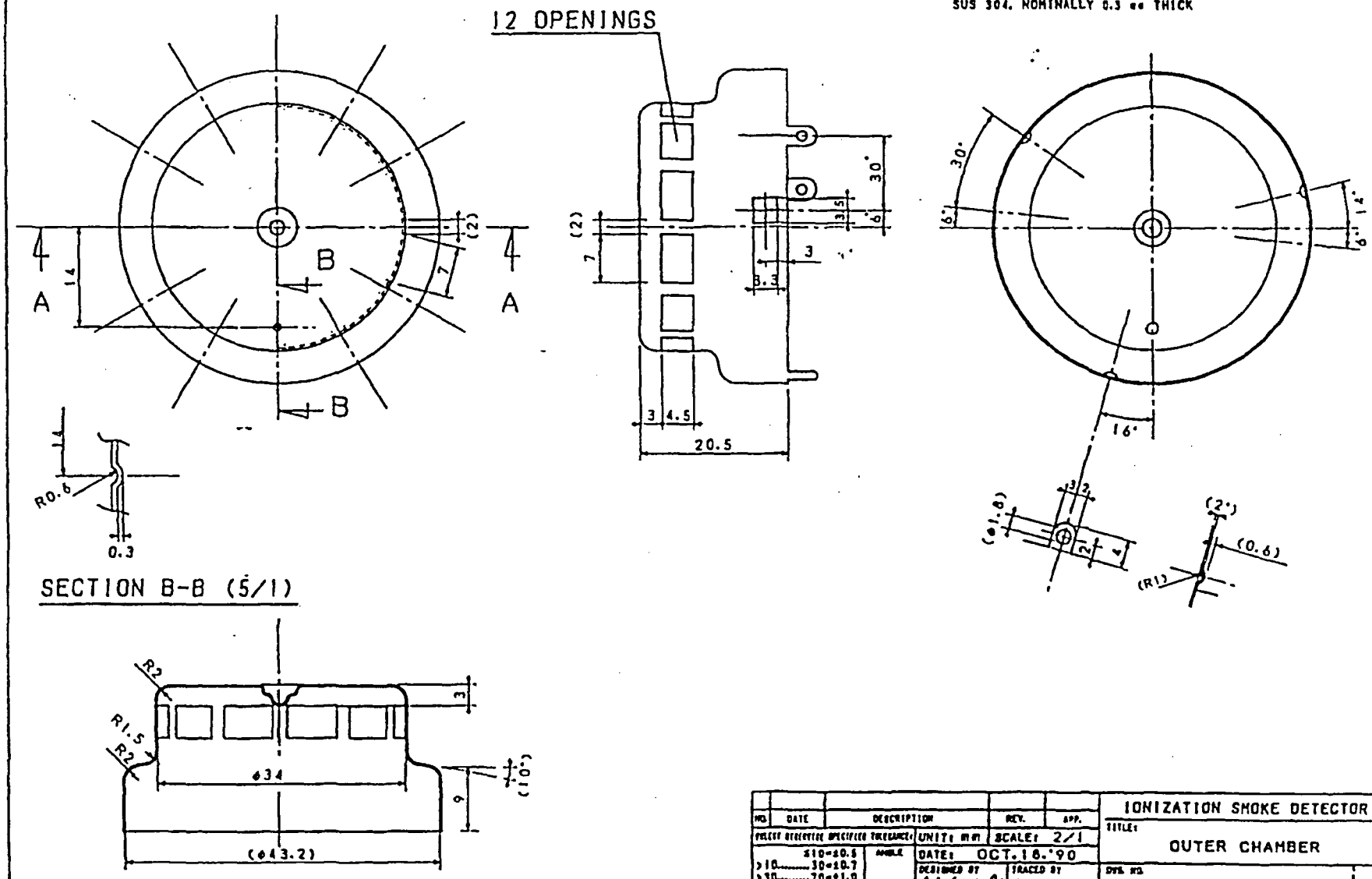

NO.	DATE	DESCRIPTION	REV.	APP.

UNLESS OTHERWISE SPECIFIED TOLERANCE: ≤10=±0.5, >10 ... 30=±0.7, >30 ... 70=±1.0, >70 ... 150=±1.2, >150 ... 300=±1.5, >300 ... 600=±2.0 (UNIT: mm)

ANGLE ±3°

UNIT: mm SCALE: 2/1

DATE: OCT. 18. '90

DESIGNED BY: J. Kobayashi

TRACED BY:

CHECKED BY: Tedasahi

APPROVED BY: Y. Tomita

IONIZATION SMOKE DETECTOR

TITLE: OUTER CHAMBER

DWG. NO. CF30401005

NOHMI BOSAI LTD.

MS15-010 A-9/15

MATERIAL: STAINLESS STEEL PLATE
SUS 304 NOMINALY 0.1mm THICK

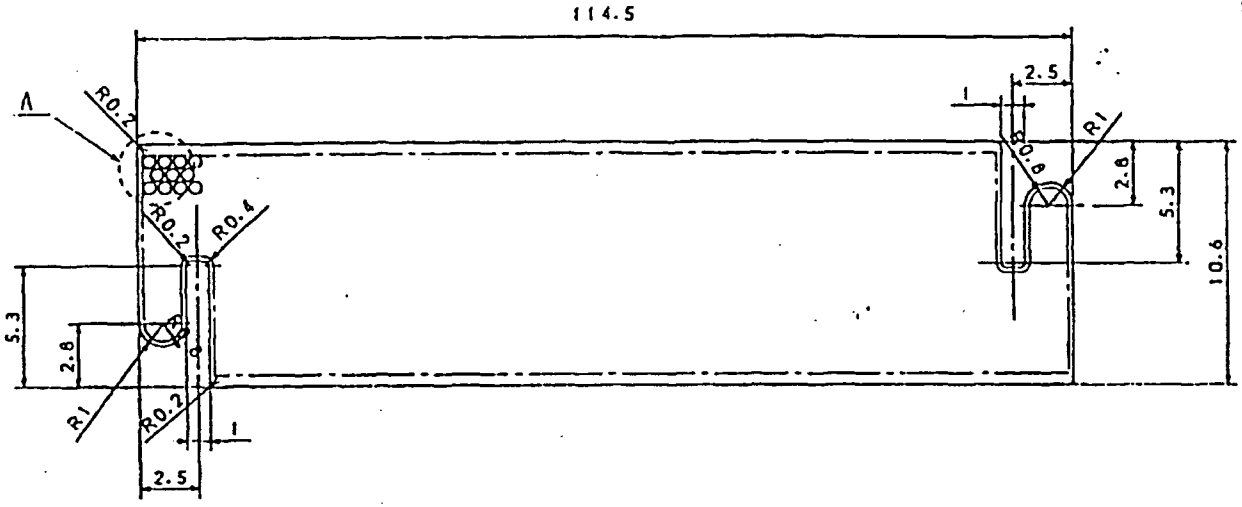

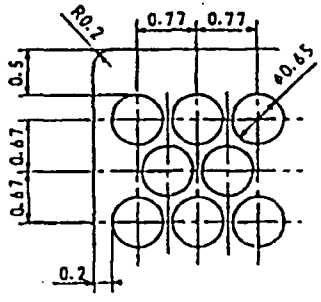

DETAIL "A" (10/1)

NO.	DATE	DESCRIPTION	REV.	APP.

UNLESS OTHERWISE SPECIFIED TOLERANCE: UNIT: mm SCALE: 5/1

≤10-±0.5 >10.....30-±0.7 >30.....70-±1.0 >70.....150-±1.2 >150.....300-±1.5 >300.....500-±2.0 (UNIT:mm)	ANGLE ±3°	DATE: Jun. 22. '91 DESIGNED BY J. Kobayashi TRACED BY CHECKED BY T. Isasaki APPROVED BY Y. Tomita

IONIZATION SMOKE DETECTOR

TITLE: INSECT SCREEN

DWG. NO. CF30401009

NOHMI BOSAI LTD.

MARKING PATTERN

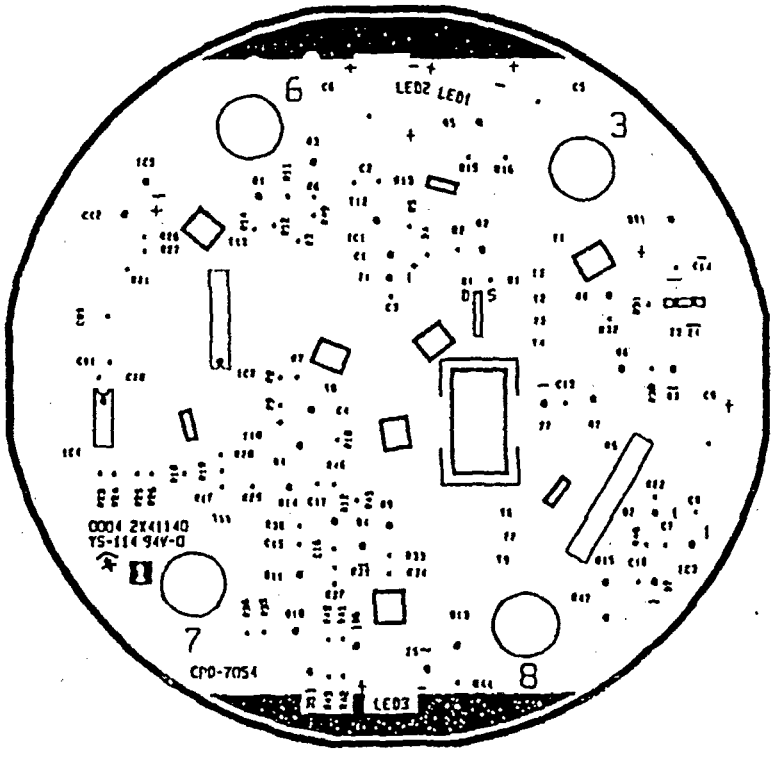

CIRCUIT PATTERN

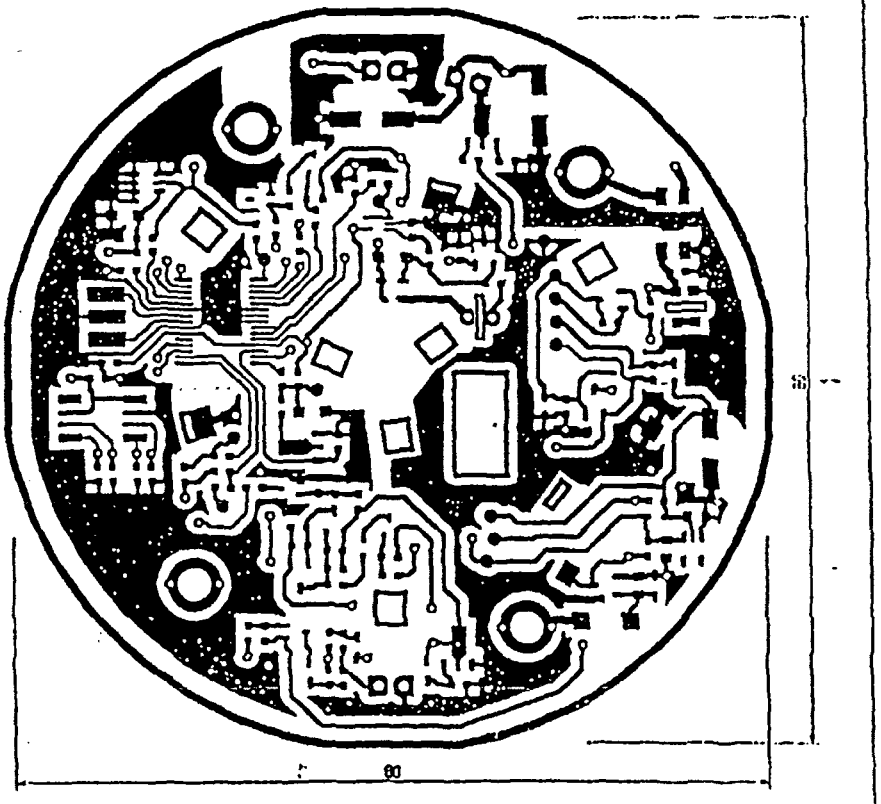

COMPONENT RECOGNIZED (ZPMV2),NO.YS-114.
FLAME CLASS 94V-0,NOMINALLY 1.2MM THICK.

No.	DATE	DESCRIPTION	REV.	CHK.	APP.

UNLESS OTHERWISE SPECIFIED TOLERANCE:
±10 ±0.5
> 10..... 30 ±0.7
> 30..... 70 ±1.0
> 70..... 150 ±1.2
> 150..... 300 ±1.5
> 300..... 500 ±2.0
(UNIT: mm)

ANGLE ±3°

UNIT: mm SCALE: 2 / 1
DATE: Feb 24 2004
DESIGNED BY T.Noguchi
TRACED BY
CHECKED BY K.Kogenenen
APPROVED BY K.Kogenenen

TITLE: PRINTED WIRING BOARD(SIDE A)
MODEL CPD-7054
DWG. NO. SF30404111
NOHMI BOSAI LTD.

MATERIAL:STAINLESS STEEL PLATE
SUS 304, NOMINALLY 0.3 mm THICK

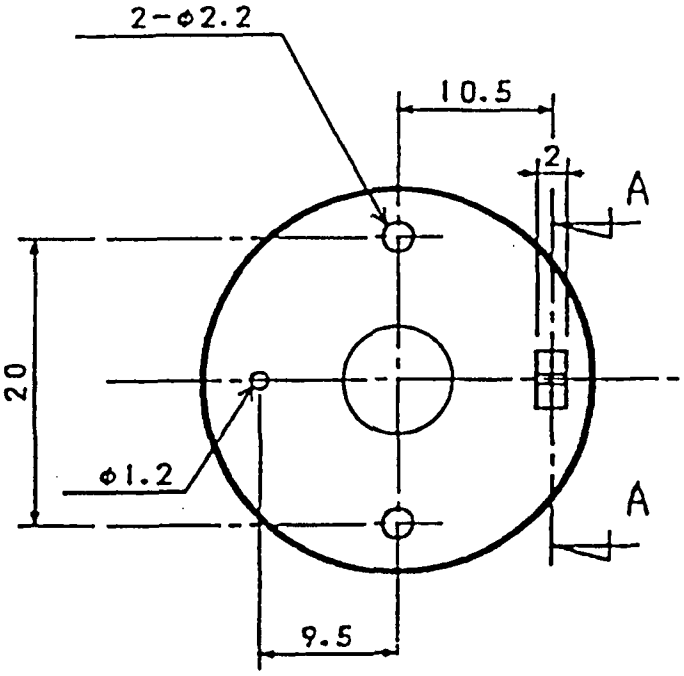

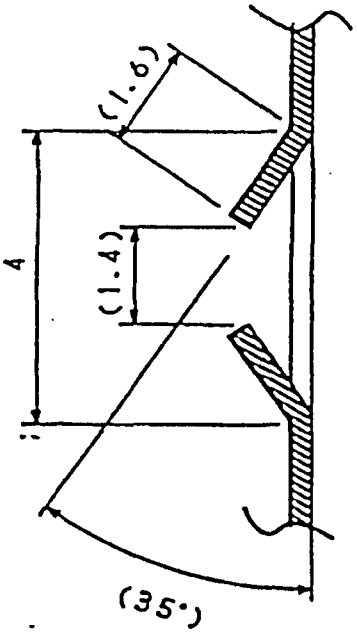

SECTION A-A
(10/1)

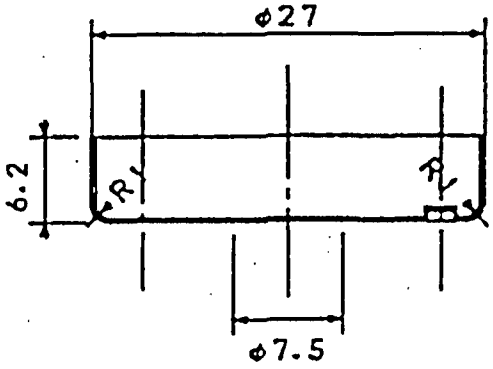

NO.	DATE	DESCRIPTION	REV.	APP.

UNLESS OTHERWISE SPECIFIED TOLERANCE:

	ANGLE
≤10-±0.5	±3°
>10.....30-±0.7	
>30.....70-±1.0	
>70.....150-±1.2	
>150.....300-±1.5	
>300.....500-±2.0	
(UNIT:mm)	

UNIT: mm | SCALE: 2/1
DATE: Oct.27.'91
DESIGNED BY: I. Kobayashi | TRACED BY:
CHECKED BY: T. Sasaki | APPROVED BY: Y. Tomita

IONIZATION SMOKE DETECTOR
TITLE: INTERMEDIATE ELECTRODE
DWG. NO. CF40401010
NOHMI BOSAI LTD.

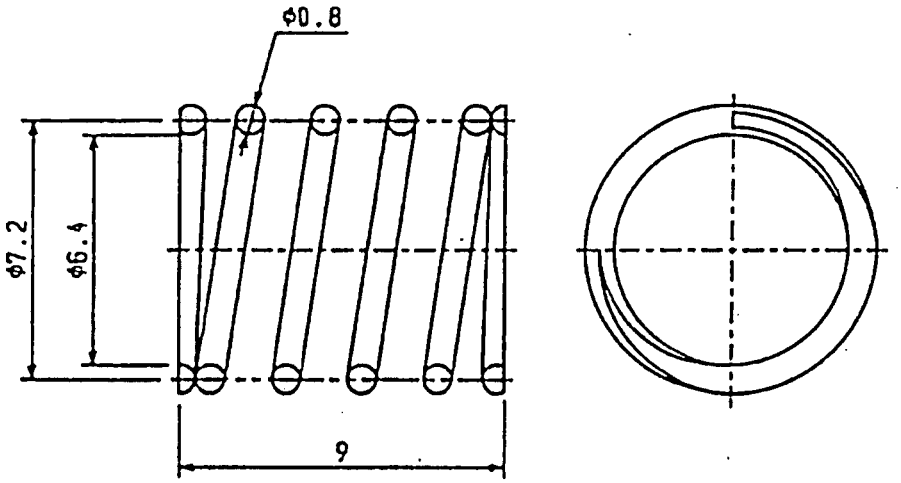

MATERIAL		SUS304-WPA
DIAMETER OF SPRING MATERIAL(mm)		0.8
AVERAGE DIAMETER OF COIL (mm)		7.2
INSIDE DIAMETER OF COIL (mm)		6.4
EFFECTIVE NUMBER OF COILS		4.5
TOTAL NUMBER OF SPRING COILS		6.5
THE DIRECTION OF A VOLUME		RIGHT
FREE HEIGHT (mm)		9
FOR ASSEMBLY	HEIGHT (mm)	5.5
	OVERWEIGHT (N)	7.7N±10%
SPRING CONSTANT		0.22

DATE	DESCRIPTION	REV.	CHK.	APP.

UNLESS OTHERWISE SPECIFIED TOLERANCE;

≤10=±0.5
> 10..... 30=±0.7
> 30..... 70=±1.0
> 70.....150=±1.2
> 150.....300=±1.5
> 300.....500=±2.0
(UNIT;mm)

ANGLE ±3°

UNIT; mm SCALE; 5 / 1

DATE; SEP. 25 2002

DESIGNED BY A. Okada

TRACED BY

CHECKED BY J. Ishikawa

APPROVED BY

TITLE;
IONIZATION SMOKE DETECTOR

SPRING

DWG. NO.
AF40404003

NOHMI BOSAI LTD.

CIRCUIT PATTERN

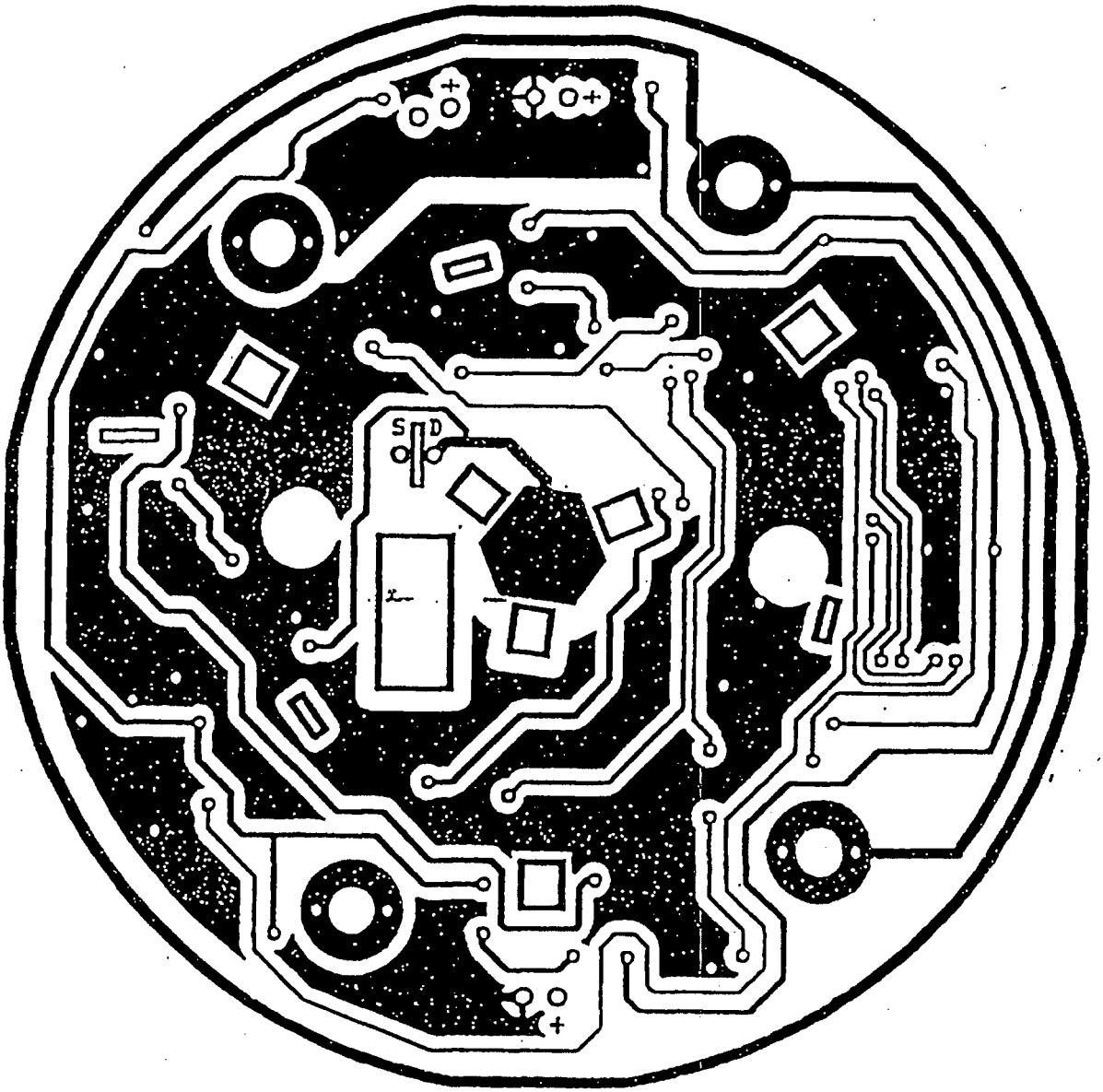

COMPONENT RECOGNIZED (ZPMV2),NO.YS-114.
FLAME CLASS 94V-0,NOMINALLY 1.2MM THICK.

DATE	DESCRIPTION	REV.	CHK.	APP.	TITLE: PRINTED WIRING BOARD(SIDE B)
UNLESS OTHERWISE SPECIFIED TOLERANCE:		UNIT: mm	SCALE: 2 / 1		MODEL CPD-7054
≦10 : ±0.5 > 10..... 30 : ±0.7 > 30..... 70 : ±1.0 > 70.....150 : ±1.2 > 150.....300 : ±1.5 > 300.....500 : ±2.0 (UNIT:mm)	ANGLE ± 3°	DATE: Feb 24 2004 DESIGNED BY T.Noguchi	TRACED BY		DWG. NO. SF40404112
		CHECKED BY K.Koyanagi	APPROVED BY K.Koyanagi		NOHMI BOSAI LTD.

Appendix C

FENWAL®

DETECTOR HEAD-IONIZATION

MODEL NO. CPD-7054

COMPATIBILITY NO. IF1FE1

CATALOG NO. 70-540000-001

SUPPLY 24V DC

DATE OF MANUFACTURE

NOMINAL SENSE.:

1.30+0.45 -0.55%/FT OBSCURATION

MAXIMUM AMBIENT 120°F (49°C)

READ INSTALLATION INSTRUCTION:

CONTAINS RADIOACTIVE MATERIAL:

AMERICIUM 241 0.8 MICROCURIES

US NRC LIC. NO. 20-15285-03E

RAYONNEMENT - DANGER - RADITION

WARNING: CONNECT DETECTOR ONLY TO CONTROL UNIT INITIATING DEVICE CIRCUIT AS SPECIFIED IN DETECTOR OR CONTROL UNIT LITERATURE OR SYSTEM MAY NOT OPERATE.

SER.NO.

RETURN TO KIDDE-FENWAL, INC.
400 MAIN ST.
ASHLAND, MA. 01721
FOR SERVICING

MADE IN JAPAN

CAUTION

C UL US LISTED

FM APPROVED

DETAIL "A"

SCALE: 2=1

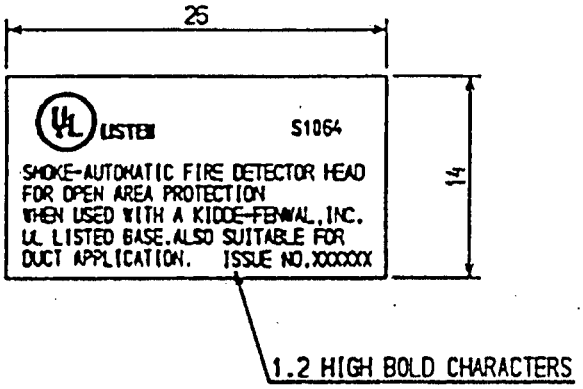

NOTES:
1. MATERIAL: U.L.I. APPROVED, TAMPERPROOF PRESSURE SENSITIVE PAPER.
   COLOR: WHITE
2. ALL PRINTING TO BE BLACK.
3. TO BE SUPPLIED IN ROLL FORM CUT THRU TO LINER.
4. SOURCE: U.L.I. APPROVED VENDOR.

'02.4.5	Replace with UL logo	T. I	Tokada		TITLE;
DATE	DESCRIPTION	REV.	CHK.	APP.	MODEL:PSD7155D,PSD7155P
UNLESS OTHERWISE SPECIFIED TOLERANCE;		UNIT; mm	SCALE; 2 / 1		UL LABEL
≤10=±0.5 > 10..... 30=±0.7 > 30..... 70=±1.0 > 70.....150=±1.2 > 150.....300=±1.5 > 300.....500=±2.0 (UNIT;mm)	ANGLE ±3°	DATE; SEP 18 1997			
		DESIGNED BY K.Koganemaru	TRACED BY		DWG. NO. AF40400913c
		CHECKED BY Y.Ariga	APPROVED BY A.Igarashi		NOHMI BOSAI LTD.

Appendix D

JRIA

JAPAN RADIOISOTOPE ASSOCIATION

28-45, HON-KOMAGOME 2-CHOME, BUNKYO-KU
TOKYO
Tel. 03-5395-8032, Fax. 03-5395-8054

TEST REPORT

This is a test report on ionization type smoke detector, performed by JRIA.

1 Test sample

1.1 Name : Smoke detector

1.2 Type : MODEL CPD 7054

1.3 Manufacturer : NOHMI BOSAI LTD.

1.4 Number of sample : 2

1.5 Sample No. : No.1 and No.2

1.6 Radiation source equipped in the detector :

Nuclide : ^{241}Am

Manufacturer : AEA TECHNONOLOGY.

Activity : 29.6kBq

Code : AMMK7544

2 Test

2.1 Dose Rate Measurements :

This measurement is done along six directions i. e. front, back, and side A to D as shown in Fig. 1, at the distance of 5cm and 25cm from the surface of the detector to the assembly of specimen.

2.2 Drop Test :

A smoke detector assembly is subjected to the test once dropping to freely from a height of 10m onto the concrete target.

After the test, the specimen is subjected to visual inspection and leakage assessment of activity by wipe test method.

2.3 Heat Test :

A source holder, containing a 29.6kBq ^{241}Am source is put into a quartz tube, inserts into a preheated electric furnace and keeps at 600℃ for 60 minutes in nitrogen atmosphere. The exhaust gas is led to 3 liquid traps containing

0.01N HCI solution connected in series. (Fig. 2)

The quartz tube with the specimen is taken out of the furnace, leaves to cool to room temperature under stream of nitrogen. Then the specimen is subjected to visual inspection and leakage assessment of activity.

The activity leakage assessment is made by wipe test method, and moreover, the inner surface of the quartz tube is rinsed with 0.01NHCI solution. Both the rinsing solution and the trapping solution are also subjected to the measurement of alpha emitter.

Temperature variation inside the furnace is successively monitored during the test. (See Table1-1. and Table1-2.)

3 Results

3.1 Dose Rate Measurements :

The results are listed in Table 2.

Table 2.

Sample No.1

Direction		Dose rate	
		Detector-to-surface distance 5cm	Detector-to-surface distance 25cm
Front		$4.3\times10^{-2}\mu$ Sv / h	$1.8\times10^{-3}\mu$ Sv / h
Back		$1.2\times10^{-2}\mu$ Sv / h	$6.6\times10^{-4}\mu$ Sv / h
Side	Direction A	$4.5\times10^{-4}\mu$ Sv / h	Under detection limit
	Direction B	$4.9\times10^{-4}\mu$ Sv / h	Under detection limit
	Direction C	$4.5\times10^{-4}\mu$ Sv / h	Under detection limit
	Direction D	$4.5\times10^{-4}\mu$ Sv / h	Under detection limit

Detection limit : $3.6\times10^{-4}\mu$Sv/h

Sample No.2

Direction		Dose rate	
		Detector-to-surface distance 5cm	Detector-to-surface distance 25cm
Front		$4.4\times10^{-2}\mu$ Sv / h	$2.0\times10^{-3}\mu$ Sv / h
Back		$1.2\times10^{-2}\mu$ Sv / h	$7.0\times10^{-4}\mu$ Sv / h
Side	Direction A	$5.0\times10^{-4}\mu$ Sv / h	Under detection limit
	Direction B	$4.7\times10^{-4}\mu$ Sv / h	Under detection limit
	Direction C	$4.7\times10^{-4}\mu$ Sv / h	Under detection limit
	Direction D	$5.3\times10^{-4}\mu$ Sv / h	Under detection limit

Detection limit : $3.6\times10^{-4}\mu$Sv/h

3.2 Drop Test :

a) Visual Inspection

We cannot find any significant damage in all samples. Although only the outermost cover of No.1 was slightly opened. (Fig. 3 to Fig. 7)

b) Leakage Assessment of the Activity

The results are listed in Table 3.

Table 3.

Sample No	Activity
No.1	Under detection limit
No.2	Under detection limit

Detection limit : 1.20Bq

3.3 Heat Test :

a) Visual Inspection

The specimen was generally discolored but showed no sign of damage such as melting or deformation as shown in Fig. 8 and Fig. 9.

b) Leakage Assessment of the Activity

The results are listed in Table 4.

Table 4.

Sample No.	trapping solutions(1)	trapping solutions(2)	trapping solutions(3)	trapping solutions(4)	Wipe test
No.1	Under detection limit[1]	Under detection limit[2]	Under detection limit[3]	Under detection limit[4]	Under detection limit[5]
No.2	Under detection limit[6]	Under detection limit[7]	Under detection limit[8]	Under detection limit[9]	Under detection limit[10]

Detection limit : 1)3.2Bq/g 2) 2.4Bq/g 3) 2.4Bq/g 4) 2.4Bq/g 5) 0.16Bq

6) 3.2Bq/g 7) 2.4Bq/g 8) 2.4Bq/g 9) 2.4Bq/g 10) 0.16Bq

Tested by T . HAGIWARA

Division Of Radioisotopes Technical Section

T. Hagiwara Date 27/04/2004

Approval by T.KIMURA

Manager, Radioisotopes Technical Section

T. Kimura Date 27/04/2004

JAPAN RADIOISOTOPE ASSOCIATION

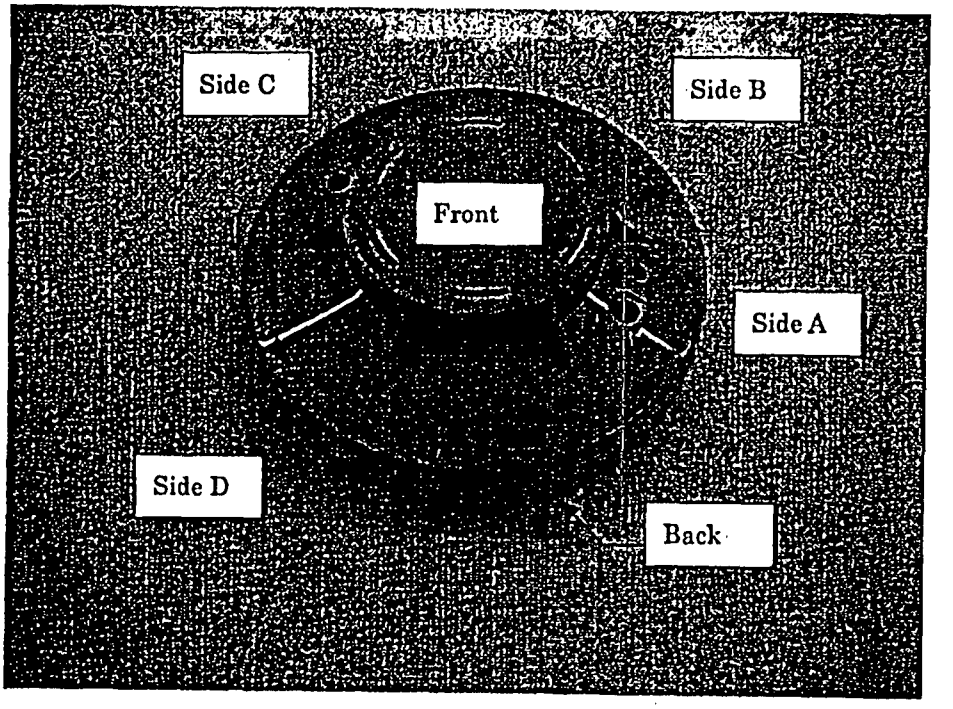

Fig.1 Points of Dose Rate Measurements

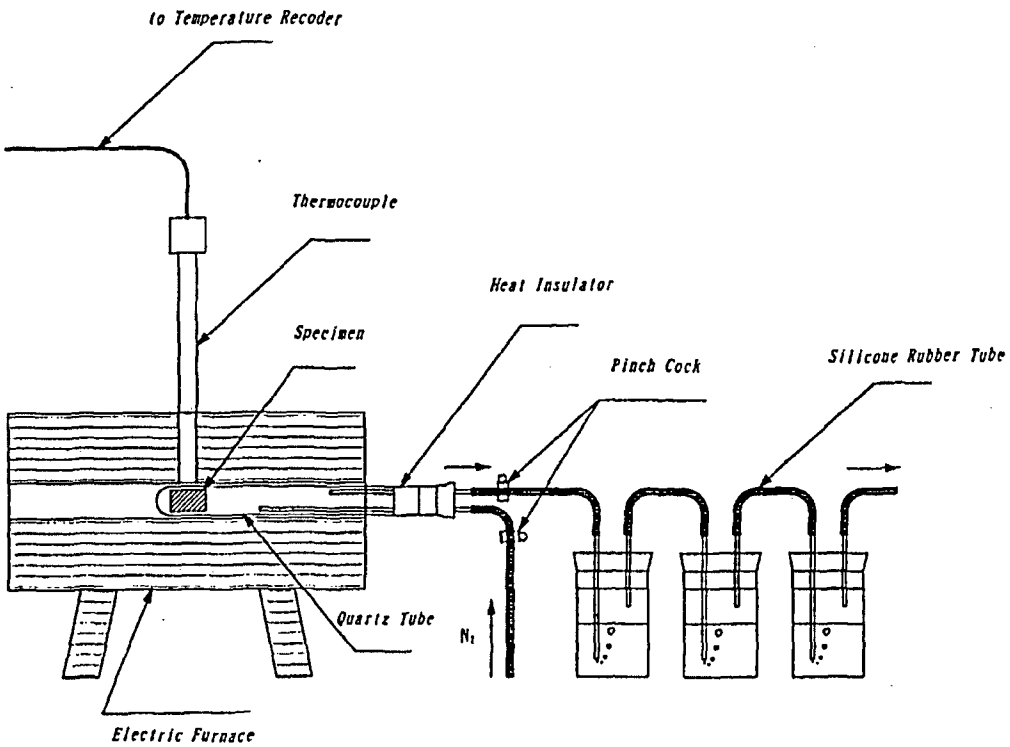

Fig.2 Schematic Diagram of the Heat Testing Apparatus

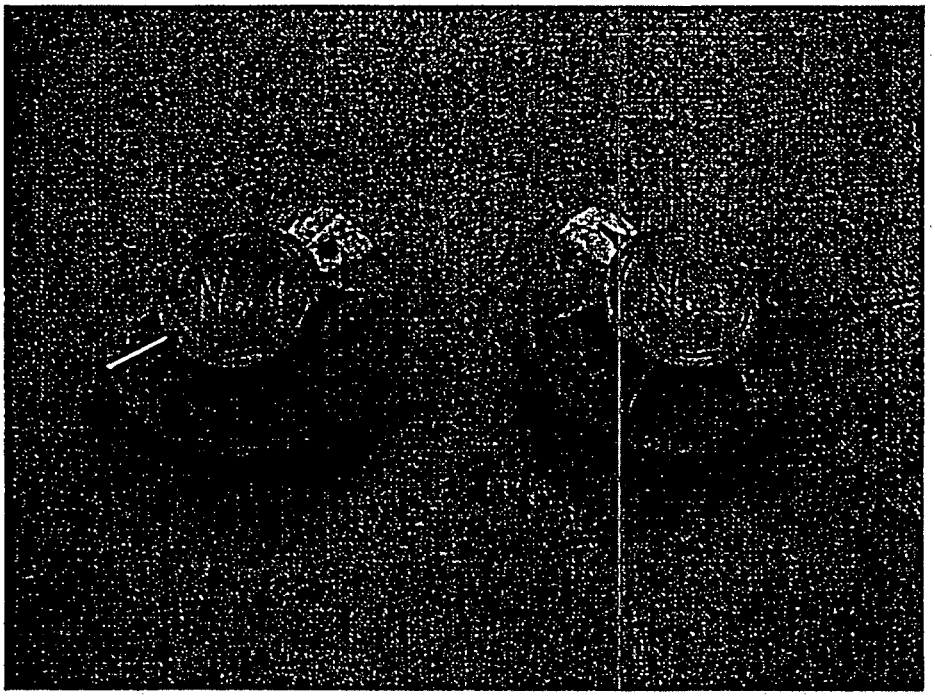

Fig.3 Appearance of the Specimen before the Drop Test

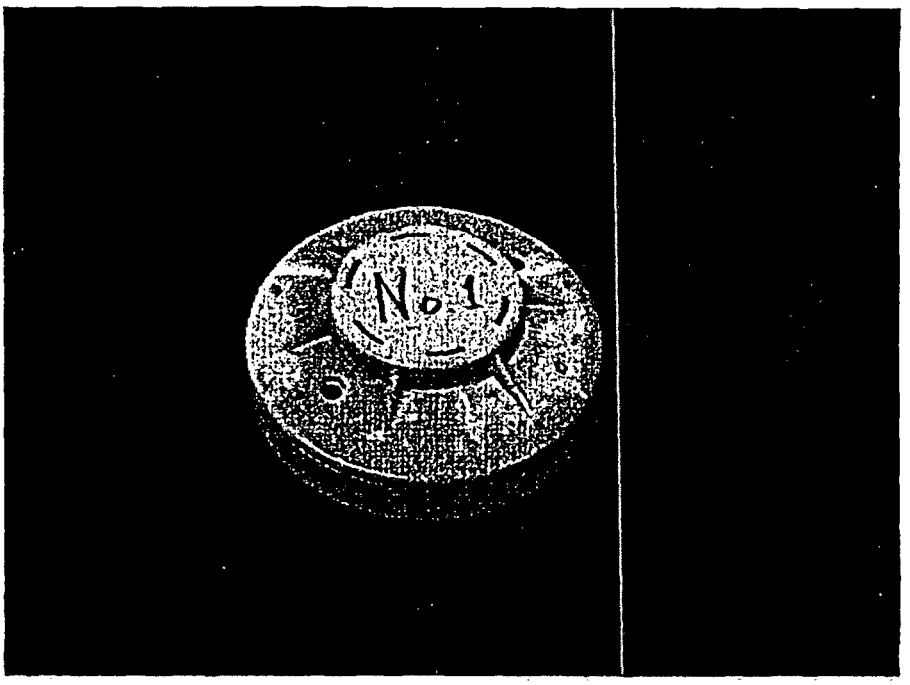

Fig.4 Appearance of the Specimen after the Drop Test(No.1)

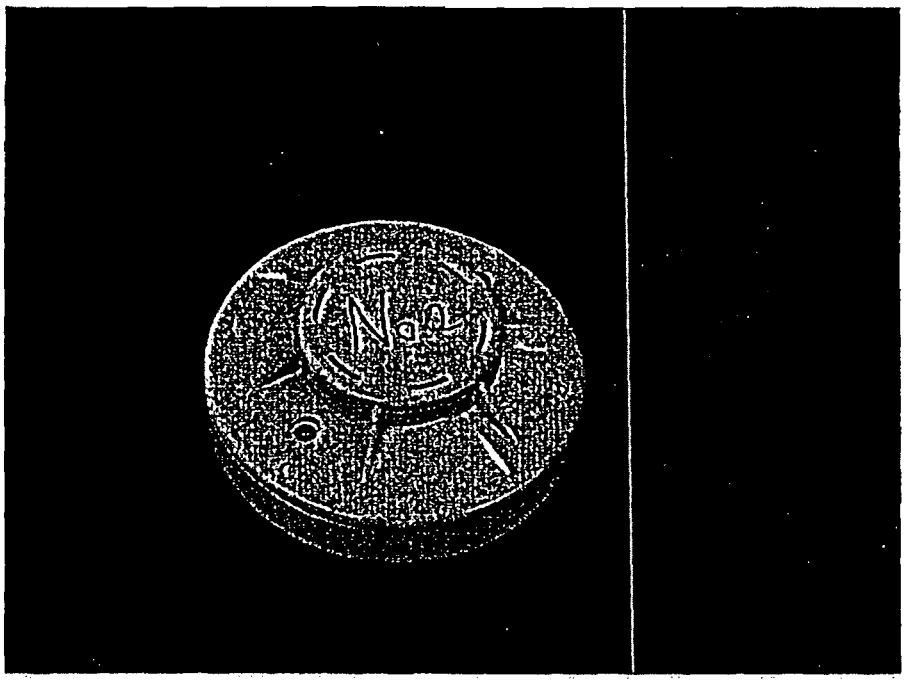

Fig.5 Appearance of the Specimen after the Drop Test(No.2)

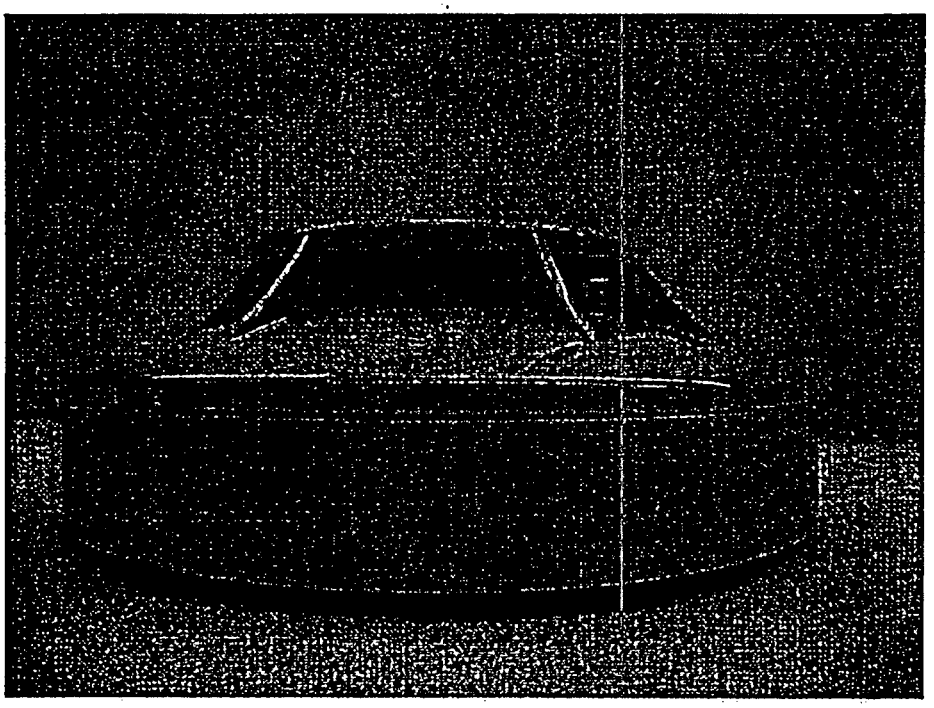

Fig.6 Appearance of the Specimen after the Drop Test(No.1)

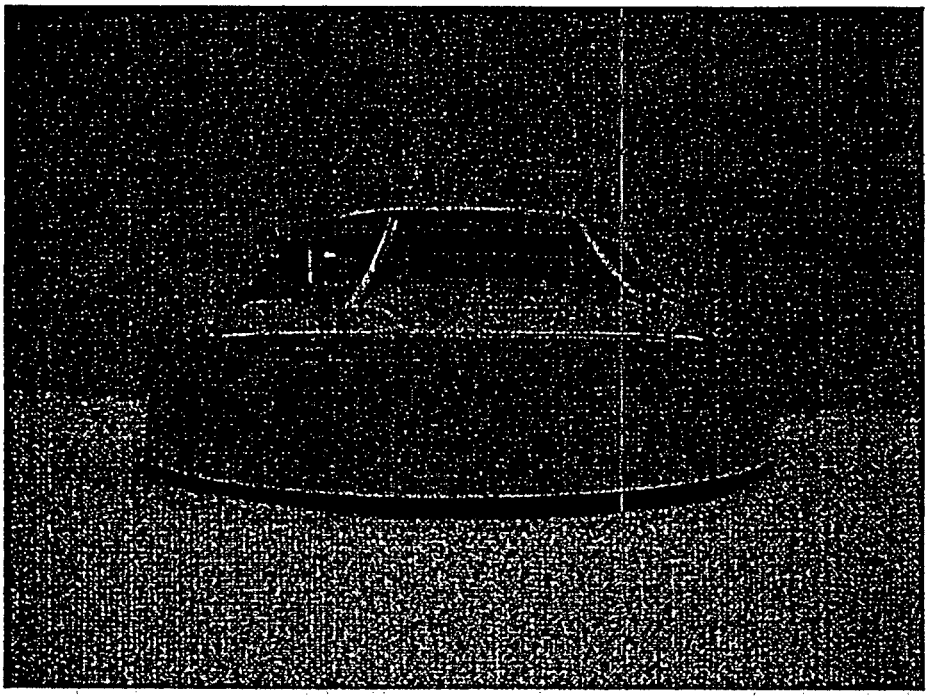

Fig.7 Appearance of the Specimen after the Drop Test(No.2)

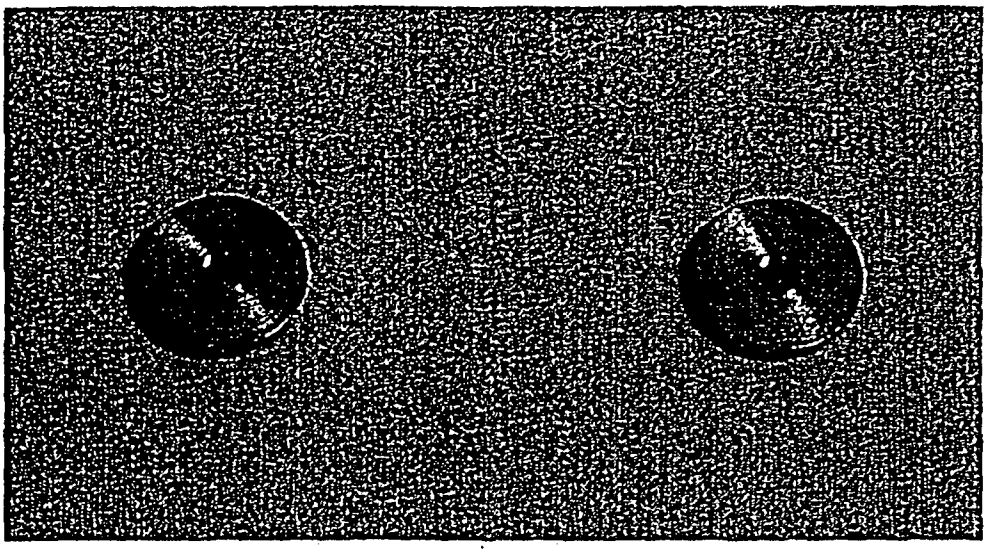

Fig.8 Appearance of the Specimen before the Heat Test (No.1,No.2)

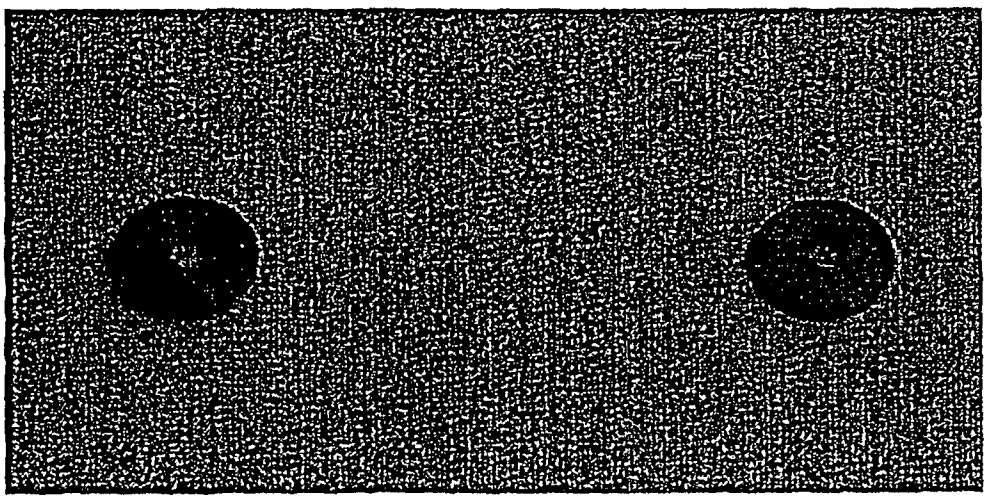

Fig.9 Appearance of the Specimen after the Heat Test (NO.1,No.2)

Appendix E

Installation Wiring Diagram

Effective: September 2004

CPD-705x Ionization Smoke Detectors
PSD-715x Photoelectric Smoke Detectors
THD-705x Heat Detectors
7X.5X.A DRAFT FOR AGENCY APPROVAL

1.0 DETECTOR PART NUMBERS

This document covers the installation and wiring of the following Smoke and Heat Detectors:

Part Number	Model	Type
70-510000-001	CPD-7051	Ionization
70-510000-011	CPD-7051C	Ionization - ULC
70-510000-060	CPD-7051D	Ionization - Duct
70-540000-001	CPD-7054	Ionization - Advanced
71-550000-001	PSD-7155	Photoelectric
71-550000-011	PSD-7155C	Photoelectric - ULC
71-550000-002	PSD-7155P	Photoelectric - High Velocity
71-550000-060	PSD-7155D	Photoelectric - Duct
71-560000-001	PSD-7156	Photoelectric - Thermal
71-560000-011	PSD-7156C	Photoelectric - Thermal - ULC
71-570000-001	PSD-7157	Photoelectric - Advanced
70-520000-001	THD-7052	Heat - Fixed Temp + Rate-Of-Rise
70-530000-001	THD-7053	Heat - Fixed Temperature

2.0 TYPICAL WIRING DIAGRAMS

Figures 1, 2, 3 and 4 are typical wiring diagrams of 2-Wire Detector systems and Figure 5 shows a 4-Wire detector system.

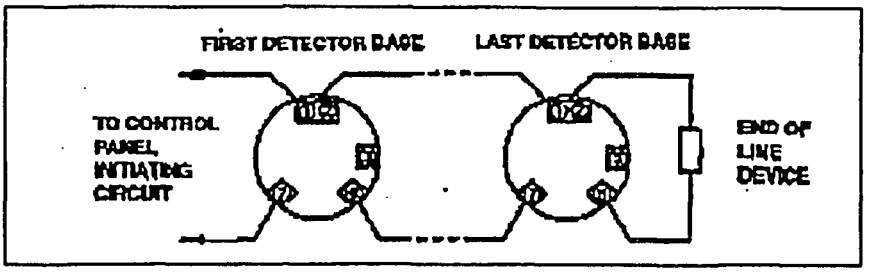

Figure 1. Detector using 2-Wire 2WB Base (Less Options)

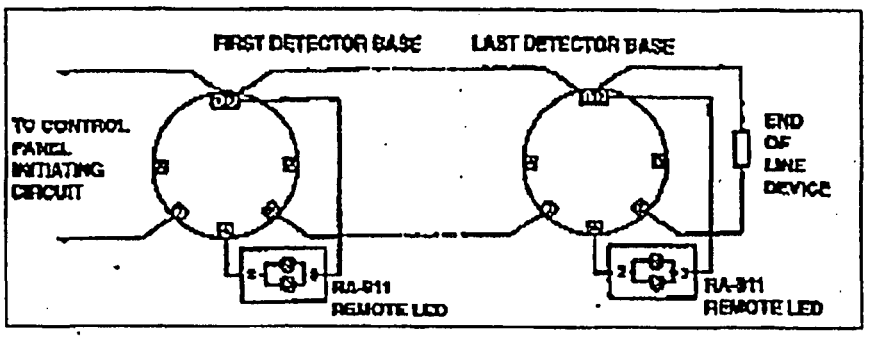

Figure 2. Detector using 2-Wire 2WRLT Base with Remote Indicator Option

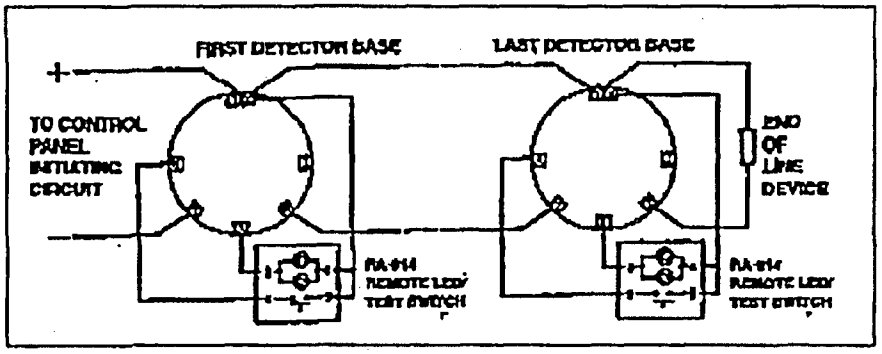

Figure 3. Detector using 2-Wire 2WRLT Base with Remote Indicator and Remote Test Switch Options

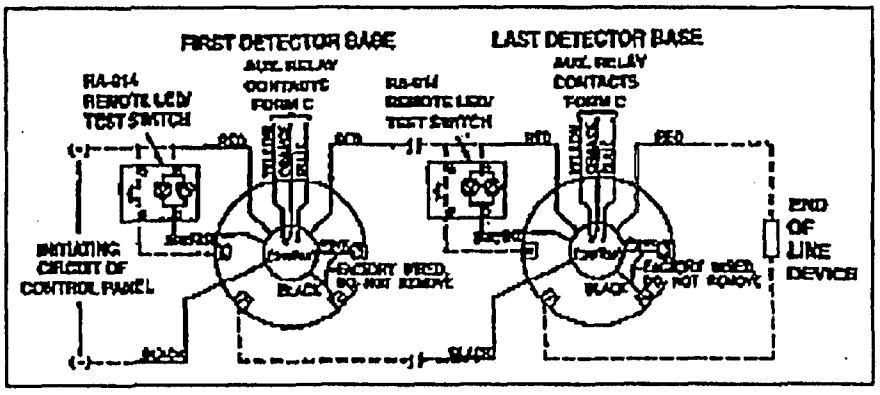

Figure 4. Detector using 2-Wire 2WRB Base with Relay Module

Notes:
1. All Relays are shown in normal position (power ON)
2. Field wiring is shown dashed.
3. See General Note 7

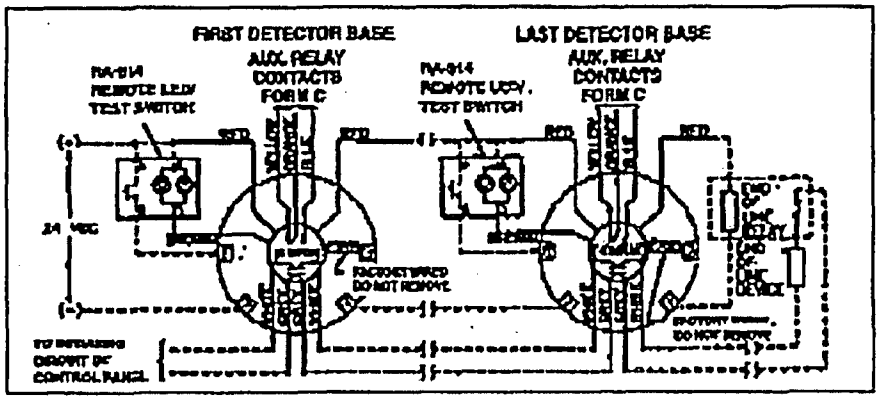

Figure 5. Detector using 4-Wire 4WRB Base with Relay Module

Notes:
1. All Relays are shown in normal position (power ON)
2. Field wiring is shown dashed.

3.0 GENERAL NOTES AND CAUTIONS

3.1 To insure proper installation of the detector head to the base, be sure wires are properly dressed at installation:

a. Position all wires flat against the base.
b. Take all slack in the outlet box.
c. Route wires away from connector terminals.

3.2 If you have installed the supplied jumper wire between terminals 6 and 7 (by inserting the jumper into the holes provided in the contact blades of terminals 6 and 7) to test detector loop continuity, be sure to remove the jumper before installing the detector head.

3.3 Do not use looped wire under terminal 1. Break wire run to provide supervision of connections.

3.4 Observe detector polarity when using LED return wire and when using Remote Test option.

3.5 All relays are shown in normal position (POWER ON). Ratings of Auxiliary contacts are as specified in DETECTOR BASE OPTIONS.

3.6 The end-of-line supervisory device shall be compatible with the control unit used. The end-of-line supervisory relay utilized shall be a listed end-of-line supervisory relay rated for the DC supply voltage used. The Fenwal end-of-line relay P/N 29-116788-001 is rated for 24 VDC operation.

3.7 When detectors employ the 2WRB base with relay, all detectors on a loop must be equipped with this option and all must be interconnected to perform a common function.

3.8 If Remote LED is required, use Model RA-911 P/N 70-200000-911.

3.9 If Remote Test Switch is required use Model RA-914 P/N 70-200000-914.

3.10 Per UL listing, open area smoke detectors are intended for mounting on a ceiling not less than 6 inches from a wall, or on a wall not less than 4 inches nor more than 12 inches from the ceiling.

4.0 DETECTOR BASE OPTIONS

UL Part No. ULC Part No.	Model	CID	Description
70-501000-001 70-501000-011	2WB 2WBC	FE51A	2-W Base. Connects to detection circuit via screw terminals
70-501000-002 70-501000-012	2WRLT 2WRLTC	FE52A	2-W Base w/ Remote LED & Test capabilities. Connects to detection circuit via screw terminals. Minimum Alarm Current 15 mA @ 24 VDC.
70-501000-005 70-501000-015	2WRB 2WRBC	FE55A	2-W base w/ 2WRM, Remote LED & Test capabilities. Connects to detection circuit via pigtail leads. Minimum Alarm Current 19 mA @ 24 VDC
70-501000-101 70-501000-111	4WRB 4WRBC	N/A	4-W base w/ 4WRM, Remote LED & Test capabilities. Connects to detection circuit via pigtail leads. Minimum Alarm Current 35 mA @ 24 VDC
70-500000-004	2WRM	N/A	SPDT Relay for 2WRB & 2WRBC Bases. Contacts rated 1.0 A, 30 VDC / 0.5 A, 125 VAC
70-500000-102	4WRM	N/A	SPDT Relay for 4WRB & 4WRBC Bases. Contacts rated 1.0 A, 30 VDC / 0.5 A, 125 VAC
70-501000-003	MA-001	MAFE1	Mechanical Adapter allows CPD-705X & PSD-715X Detectors to physically connect to Series 70 Base P/Ns 70-201000-001, -002, -003, -005 & DH-22
29-116788-001		N/A	EOL Supervisory Relay 24 VDC
06-117883-001		N/A	Test Magnet

Note: CID is the UL Compatibility Identifier Number.

5.0 DETECTOR BASE RATINGS

Detector Model	CID	Base Model or P/N	CID	Standby Voltage (VDC)	Max. Alarm Current (mA)	Max. Standby Current (µA)	Typical Standby Current (µA)
CPD-7051 CPD-7051C CPD-7051D CPD-7054 PSD-7155 PSD-7155C PSD-7155P PSD-7155D PSD-7156 PSD-7156C PSD-7157 THD-7052 THD-7053	151FE1 151FE1 151FE1 TBD P55FE1 P55FE1 P55FE1 P55FE1 P56FE1 P56FE1 TBD TBD TBD	2WB 2WRLT 2WRB 2WRB w/ LED 4WRB	FE51A FE52A FE53A FE55A	10.2-36.8 10.2-36.8 11.4-35.0 11.4-35.0 16.3-30.8	100	70	55
Detectors as above with MA-001 Mechanical Adapter Base		70-201000-001 70-201000-002 70-201000-005 70-201000-101 DH-22	FEO1A FE02A FE03A FE05A D22FE1	11.4-33.5 11.4-33.5 11.4-33.5 11.4-33.5 12.5-33.5	100	70	55

Note: CID is the UL Compatibility Identifier Number.

6.0 INSTALLATION (OPEN AREA PROTECTION)

Bases are mounted directly on the electrical junction boxes (3, 3.5, and 4 inch octagonal; 3 inch round; 4 inch square) without any type of mechanical adapter.

NOTE: Do not install detector heads until area has been thoroughly cleaned of construction debris, dust, etc.

7.0 VELOCITY RATING

Model	Open Area (fpm)	In-Duct (fpm)
CPD-7051	0 – 2000	500 – 2000
CPD-7051C	0 – 2000	500 – 2000
CPD-7051D	0 – 2000	500 – 2000
CPD-7054	**0 – 2000 TBD**	**500 – 2000 TBD**
PSD-7155	0 – 300	**500 – 300 TBD**
PSD-7155C	0 – 300	**500 – 300 TBD**
PSD-7155P	0 – 4000	500 – 4000
PSD-7155D	0 – 300	**500 – 300 TBD**
PSD-7156	0 – 300	--
PSD-7156C	0 – 300	--
PSD-7157	**0 – 4000 TBD**	**0 – 4000 TBD**
THD-7052	**TBD**	--
THD-7053	**TBD**	--

8.0 RESTRICTIONS

A Model RA-914 Remote Test Station must be used in conjunction with all detectors used in ducts. This limits the types of bases that may be used to the 2WRLT, 2WRB and 4WRB. See Figures 2 through 5 for wiring details.

9.0 APPLICATION NOTE

The NFPA states that Duct Smoke Detectors must not be used as a substitute for open area protection. Duct detection is intended for use in the control of air handling equipment for the purpose of closing dampers or shutting down of air handling units.

10.0 PRE-INSTALLATION ROUTINES

Fenwal recommends actual measurements of the air flows and examination of engineering specifications that define expected velocities in all models of equipment used to determine if a location is suitable for air duct detection operation. An Alnor Instrument Co., Chicago, IL Model 6000P Velometer, or equivalent may be used to check the duct air velocity.

Basic rules to follow:

1. Locate Detectors approximately six duct widths downstream from bends or inlets. These locations are fairly uniform in non-turbulent airflow and homogenous with respect to air/smoke mixing. See Figures 6A, 6B and 6C.

   Exception: Where it is physically impossible to locate the detector accordingly, the detector can be positioned closer than six duct widths, but as far as possible from the opening, bend or deflection plates.

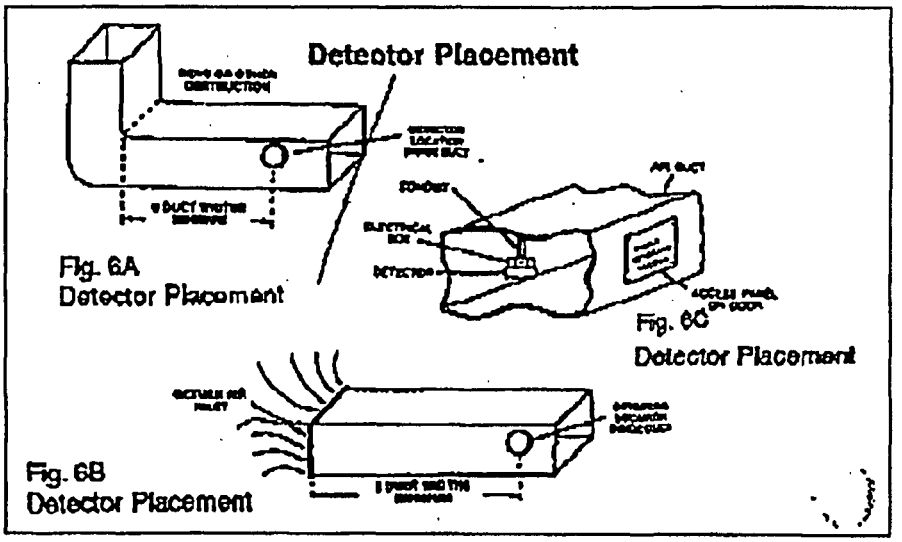

2. Locate duct detector so that dampers do not restrict air flow at the detector location.
3. Locate air duct detectors on the return duct of the equipment's air handling system. However, detectors should not be installed in the return air damper branch. See Figure 6D.

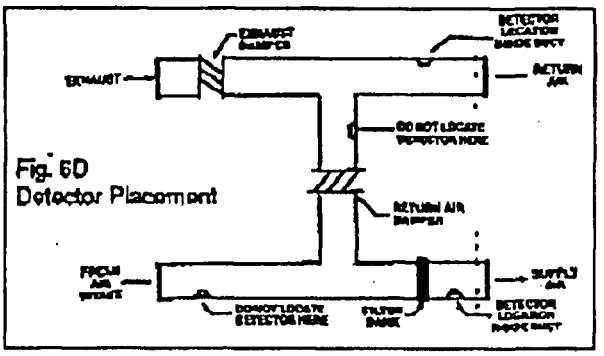

4. Locate detectors on branch lines if close identification of the source of alarm is required.
5. Locate detectors downstream side of filters to sense fires in the filters. However, it should be noted that should the filters block, sufficient air flow may no longer be present for proper operation of the duct detector. See Figure 6D.
6. Locate detectors, whenever possible, where they can be conveniently observed and readily serviced.
7. Locate detectors in return air ducts ahead of mixing areas.
8. Do not locate detectors immediately following outside air inlets except to monitor smoke entry to the handling system from an adjacent area.
9. When possible, locate detectors upstream of air humidifiers and downstream of dehumidifiers.
10. Refer to NFPA 72 for further requirements for detector installation

11.0 CONTROL UNIT SELECTION

For a complete list of UL Compatible Listed Control Panels contact Kidde-Fenwal, Inc. Applications Department.

12.0 LOCKING FEATURE

The detector bases also include an optional locking feature that prevents removal of the detector without use of a tool. To eliminate this feature, simply break off the locking tab shown in Figure 7A, then installing detector. To remove the detector from the base once the locking feature has been activated, insert a small screwdriver into the slot on the base to push the plastic tab while simultaneously turning the detector head counterclockwise (see Figure 7B).

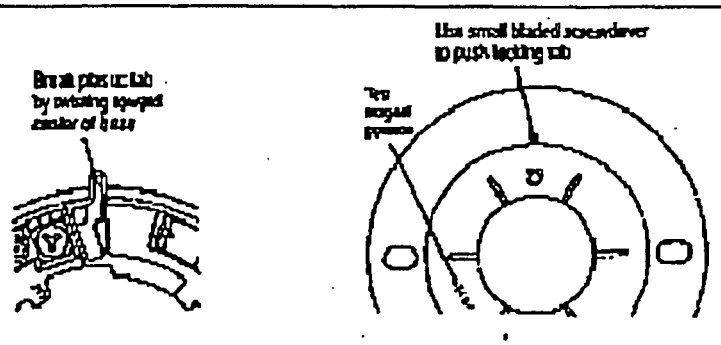

Fig. 7A
Eliminating locking feature.
Break plastic tab by twisting

Fig. 7B
Removing detector head
from base.

13.0 RELAY MODULES

The 2 wire relay module (2WRM) and 4 wire relay module (4WRM) are sold separately as retrofit/ repair parts. The installation and allowable configurations are described below:

Note: Not recommended for stand-alone operation.

13.1 Model 2WRM

The 2WRM can be installed into a 2WRLT base. This new configuration will function as a 2WRB base. Install as follows:

1. Remove resistors connected to terminals 2 to 3 and 3 to 4 on the 2WRLT base.
2. Insert the 2WRM into the base.
3. Secure into position by twisting clockwise as shown in Figure 8.
4. Wire the 2WRM and base according to Figure 4.
5. Use Tool No. 70-100000-234 to secure wire under terminals 3 and 4 shown in Figure 8.

13.2 Model 4WRM

The 4WRM can be installed into a 2WRLT or 2WRB. This new configuration will function as a 4WRB base. Install as follows:

1. Remove resistors connected to terminals 2 to 3 and 3 to 4 if converting the 2WRLT base. Remove the 2WRM if converting the 2WRB.
2. Insert the 4WRM into the base.
3. Secure into position by twisting clockwise as shown in Figure 8.
4. Wire the 4WRM and base according to Figure 5.
5. Use Tool No. 70-100000-234 to secure wire under terminals 3 and 4 shown in Figure 8.

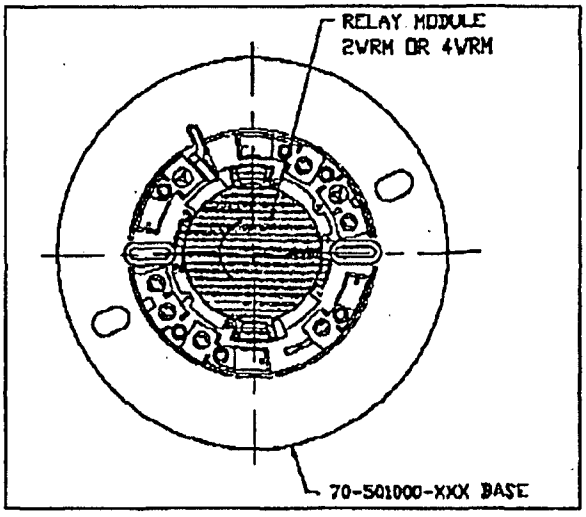

Figure 8. Relay Module

14.0 MECHANICAL RETROFIT ADAPTER (MA-001)

The MA-001 (P/N 70-501000-003) is used to allow all old style Fenwal bases (Series 70-201000-XXX) to accept the CPD-705x and PSD-715x detectors. No rewiring is required to retrofit the base.

To install:

1. Align the components as shown in Figure 9.
2. Mate the MA-001 to the existing base and twist clockwise to lock in.
3. Mate the new detector to the MA-001 and twist clockwise to secure.

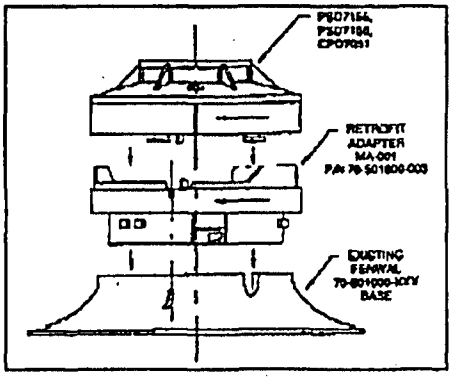

Figure 9. Installing the Mechanical Adapter MA-001 Relay Module

15.0 TESTING GENERAL

All alarm signal services, releasing devices and extinguishing systems should be disengaged while the test is being performed and re-engaged at the conclusion of testing.

1. After powering the detector head for approximately 1 minute, check to see that the indicator LED flashes. Failure to flash indicates a nonfunctioning detector or faulty wiring. Recheck wiring and replace detector head if necessary.

2. Position test magnet' against detector housing for at least 15 seconds. The detector should alarm as indicated by steady illumination of the alarm. indicator. To return each detector to normal operation, reset the control unit. OR
3. Allow smoke to enter the detector-sensing chamber for a minimum of 10 seconds. When sufficient smoke has entered the chamber, an alarm will be indicated by continuous illumination of the LED. Reset each detector and/or control unit after it alarms before attempting to test additional detectors in the same zone.
4. Failure to alarm in tests 2 or 3 indicates a defective detector requiring service.

Notes:

1. **Use extreme caution when using magnet in EDP Facilities. To be safe, notify EDP management of the intent to use magnet in their facilities. The long axis of the magnet should be positioned against the side of the detector housing marked "TEST" (See Figure 7B).**
2. **The Authority having jurisdiction may dictate which test to perform.**

16.0 SENSITIVITY METERING

The method and equipment required for sensitivity measurement of Fenwal Smoke Detectors depends on the Detector Model as tabulated below:

Sensitivity Tester	Compatible Detectors
ST-001	CPD-7051, CPD-7051C, CPD-7051D PSD-7155, PSD-7155C, PSD-7155P, PSD-7155D, PSD-7156, PSD-7156C
DST-003	CPD-7054 PSD-7157

16.1 Metering with Sensitivity Tester ST-001

Equipment required:

A. One megohm (minimum) input impedance voltmeter (Fluke Model 8024 or equivalent)
B. One Model ST-001 Fenwal Sensitivity tester (P/N 70-500000-002)

Test Method:

1. Disengage Alarm Signal Devices, Releasing Devices and Extinguishing Systems when the test is being performed.
2. Remove the detector head from base as described above.
3. Note the % per foot obscuration range marked on the detector label under nominal sensitivity.
4. Reinstall the detector to the base. Allow 1 minute for stabilization. The Alarm indicator should flash approximately once every 4 seconds. No flash indicates a non-functioning detector or faulty wiring. Steady illumination indicates an Alarm state.
5. Follow the detailed operating and sensitivity measurement instructions provided with the Sensitivity Tester (see Document 70.50.A and Figure 10). This Sensitivity Tester will allow conversion to % to foot obscuration.
6. Sensitivity readings outside the given ranges indicate a shift in sensitivity and the need for corrective action.

   a. Clean the detector as outlined under maintenance and repeat Steps 2 through 5.
   b. If the readings are still out of the allowable range, replace the detector except in cases of suspected terminal or cable problems.

7. After all tests are complete, ensure that the entire system is returned to normal.

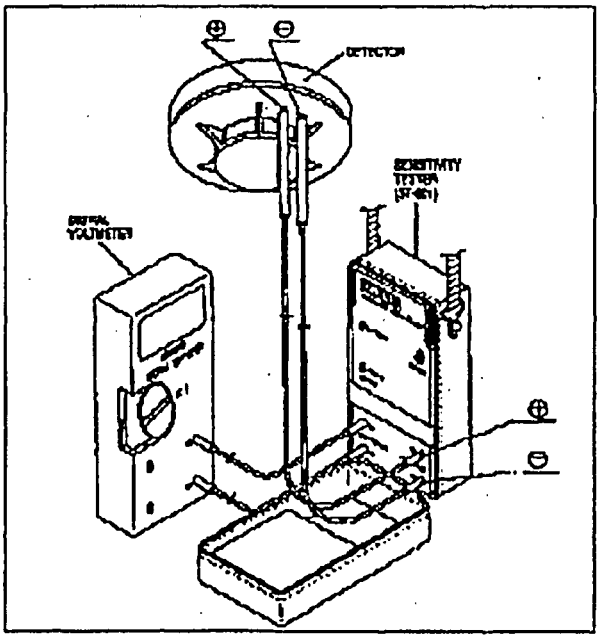

Figure 10. Model ST-001 Sensitivity Tester

16.2 Metering with Handheld Wireless Infrared Sensitivity Tester DST-003

Equipment required:

A. One Fenwal Sensitivity Tester Model DST-003. The DST-003 is a portable handheld wireless sensitivity tester that can measure the sensitivity of Model PSD-7157 and CPD-7054 smoke detectors in place. The detectors and the sensitivity tester have interactive communications by infrared pulse signals. This allows the operator to measure the sensitivity of operating wired-up detectors from floor level. The infrared link operates at a distance of fifteen feet maximum. The DST-003 operates on 2 AA-size batteries and provides a Low battery alert signal and features an Auto power-off function.

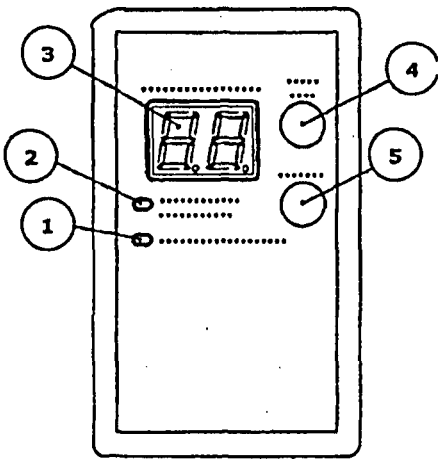

1: On-Off / Detector type change over switch
2: Measurement Start switch
3. Sensitivity Display
4. Detector type indicator

GREEN: Photoelectric smoke detector
ORANGE: Ionization smoke detector

5. Measurement failure indicator

Figure 11. Model DST-003 Sensitivity Tester

Test Method:

1. Follow the detailed operating and sensitivity measurement instructions provided with the Fenwal Sensitivity Tester Model DST-003.
2. Press the **<ON-OFF>** switch for 1 second to switch the tester ON
3. Adjust the **<Detector Selector>** switch according to the detector type to be tested.
4. Press the **<Measurement Start>** switch with the front panel surface facing the detector.
5. The sensitivity of the detector will be displayed within 20 seconds. The sensitivity value displayed indicates the following:

   A. The display indicates a value of **TBD** % / ft when the detector transmits a proper sensitivity to the tester.
   B. The display flashes "00" or "**TBD** % / ft" when the detector transmits **high-shifted** sensitivity to the tester.
   C. The display flashes "88" or "**TBD** % / ft" when the detector transmits **low-shifted** sensitivity to the tester

6. Improper Sensitivity readings indicate a shift in sensitivity and a need for corrective action.

   A. Clean the detector as outlined under the MAINTENANCE section and repeat step 4 by pressing the **<Measurement Start>** switch again for the next test.
   B. If the readings are still outside of the allowable range, replace the detector.

7. After all the tests are complete, be certain that the entire system is returned to normal. Press the **<ON-OFF>** switch for 1 second to switch the tester OFF.

LIMITED WARRANTY STATEMENT

Kidde-Fenwal, Inc. represents that this product is free from defects in material and workmanship, and it will repair or replace any product or part thereof which proves to be defective in workmanship or material for a period of three (3) years from the date shipment by Kidde-Fenwal Inc. For a full description of Kidde-Fenwal's LIMITED WARRANTY, which, among other things, limits the duration of warranties of MERCHANTABILITY and FITNESS FOR A PARTICULAR PURPOSE and EXCLUDES liability for CONSEQUENTIAL DAMAGES, please read the entire LIMITED WARRANTY on the Kidde-Fenwal Quotation, Acceptance of Order and/or Original Invoice which will become part of your sales agreement. Please contact Kidde-Fenwal directly for a return material authorization (RMA) number before returning material to the factory at Ashland, Massachusetts, shipment prepaid. Kidde-Fenwal will repair or replace and ship prepaid.

FENWAL
Protection Systems
KIDDE-FENWAL, INC.
400 MAIN STREET, ASHLAND, MA 01721
TEL (508) 881-2000 FAX (508) 881-8920
www.fenwalfire.com

These instructions do not purport to cover all the details or variations in the equipment described, nor do they provide for every possible contingency to be met in connection with installation, operation and maintenance. All specifications subject to change without notice. Should further information be desired or should particular problems arise which are not covered sufficiently for the purchaser's purposes, the matter should be referred to KIDDE-FENWAL, INC. Ashland, MA.

 2004© Kidde-Fenwal, Inc. Printed in USA