HITACHI

Richard E. Kingston
Vice President, ESBWR Licensing

P.O. Box 780
3901 Castle Hayne Road, M/C A-65
Wilmington, NC 28402 USA

T 910.819.6192
F 910.362.6192
rick.kingston@ge.com

C 910 547-1003

MFN 10-098 Docket No. 52-010

March 17, 2010

U.S. Nuclear Regulatory Commission
Document Control Desk
Washington, D.C. 20555-0001

Subject: **Transmittal of ESBWR Tier 2, Appendix 3K and Chapter 10 DCD Markups Related to GEH Internal Corrective Action**

The purpose of this letter is to submit markups to ESBWR DCD, Tier 2, Subsection 3KA.6.1 and Chapter 10, Figures 10.1-2a, 10.1-2b and 10.3-2 which are the result of a GEH internal corrective action based on errors identified by an internal review. These changes to Subsection 3KA.6.1 and Chapter 10 Figures 10.1-2a, 10.1-2b and 10.3-2 will be incorporated into DCD Revision 7.

The changes to Subsection 3KA.6.1 deleted the hollow fiber filter designation in the subsection. At this time GEH has not selected the exact type of filters to be used in the ESBWR, therefore the type of filters has been removed.

Chapter 10, Figures 10.1-2a and 10.1-2b were revised with the correct steam flow from the RPV. Figures 10.1-2a and 10.1-2b did not match the correct RPV steam flow in DCD Chapter 1, Figure 1.1-3b. The revised Figures 10.1-2a and 10.1-2b are now consistent with Figure 1.1-3b.

Chapter 10, Figure 10.3-2 was change to match Fig 10.4-7a in the numbering (1, 2, 3, 4) of the MSRs verses the "letters" (A, B, C, D) used on the old Fig 10.3-2. In addition, the three "IS & IV" under the LP turbines were changed to “IV & IS” since the nomenclature is correct on top of the LP turbines, but was backwards under the LP turbines.

The markups to Subsection 3KA.6.1 and Chapter 10, Figures 10.1-2a, 10.1-2b and 10.3-2 are contained in Enclosure 1. Verified DCD changes associated with Subsection 3KA.6.1 are identified in the attached markups by enclosing the text within

a black box. Changes made to Chapter 10, Figures 10.1-2a, 10.1-2b and 10.3-2 are identified by blue underlined additions and red strike out's in Enclosure 1.

If you have any questions or require additional information, please contact me.

Sincerely,

Richard E. Kingston

Richard E. Kingston
Vice President, ESBWR Licensing

Enclosure:

1. Document Improvements and Specific Changes to DCD Tier 2, Subsection 3KA.6.1 and Chapter 10, Figures 10.1-2a, 10.1-2b and 10.3-2

cc:	AE Cubbage	USNRC (with enclosures)
	JG Head	GEH/Wilmington (with enclosures)
	DH Hinds	GEH/Wilmington (with enclosures)
	HA Upton	GEH/San Jose (with enclosures)
	eDRF Sections	0000-0112-4451 (Figures 10.1-2a &10.1-2b),
		0000-0113-9775 (Figure 10.3-2 & Subsection 3KA.6.1)

Enclosure 1

MFN 10-098

Document Improvements and Specific Changes to

DCD Tier 2, Subsection 3KA.6.1 and

Chapter 10, Figures 10.1-2a, 10.1-2b and 10.3-2

3KA.6 CONDENSATE AND FEEDWATER SYSTEM

3KA.6.1 System URS Boundary Description

The feedwater subsystem of the C&FS provides high pressure feedwater to the reactor. The feedwater subsystem is designed for high pressure except for the feedwater pump suction and the outlet of the feedwater cleanup valve.

In the feedwater pump, the transition to low pressure occurs from the feedwater pump suction into the direct contact feedwater heater (feedwater tank). The feedwater tank is a low pressure sink. The last closed valve in the path from the reactor is the feedwater pump discharge check valve. The piping to the feedwater pump suction can remain below the URS design pressure because it connects to the low pressure sink feedwater tank. The maintenance block valves in the feedwater pump suction lines are locked open.

In the feedwater cleanup control valve, the transition to low pressure occurs from the feedwater cleanup control valve outlet connection into the condenser shell (hotwell). The hotwell is a low pressure sink. The last closed valve in the path from the reactor in the feedwater cleanup control valve is the normally closed block valve. The piping from the feedwater cleanup control valve to the condenser can remain below the URS design pressure because it connects to the low pressure sink hotwell.

The Condensate subsystem of the C&FS provides condensate to the feedwater tank, and the condensate subsystem is designed for a pressure higher than the feedwater tank, except for the condensate pump suction. The high pressure design includes the condensate polishing (~~hollow fiber~~ filters and demineralizers) units and the feedwater bypass valve. The transition to low pressure occurs from the condensate suction into the High Pressure condenser shell (hotwell, which is a low pressure sink). The last closed valve in the path from the feedwater tank is the condensate pump discharge check valve. The piping to the condensate pump suction can remain below the feedwater tank design pressure because it connects the low pressure sink hotwell. The maintenance block valves in the condensate pump suction lines are locked open.

3KA.6.2 Downstream Interfaces

None.

3KA.6.3 Low-Pressure Piping Systems and Components Designed to URS Pressure

The maintenance block valves in the condensate pump suction lines are locked open.

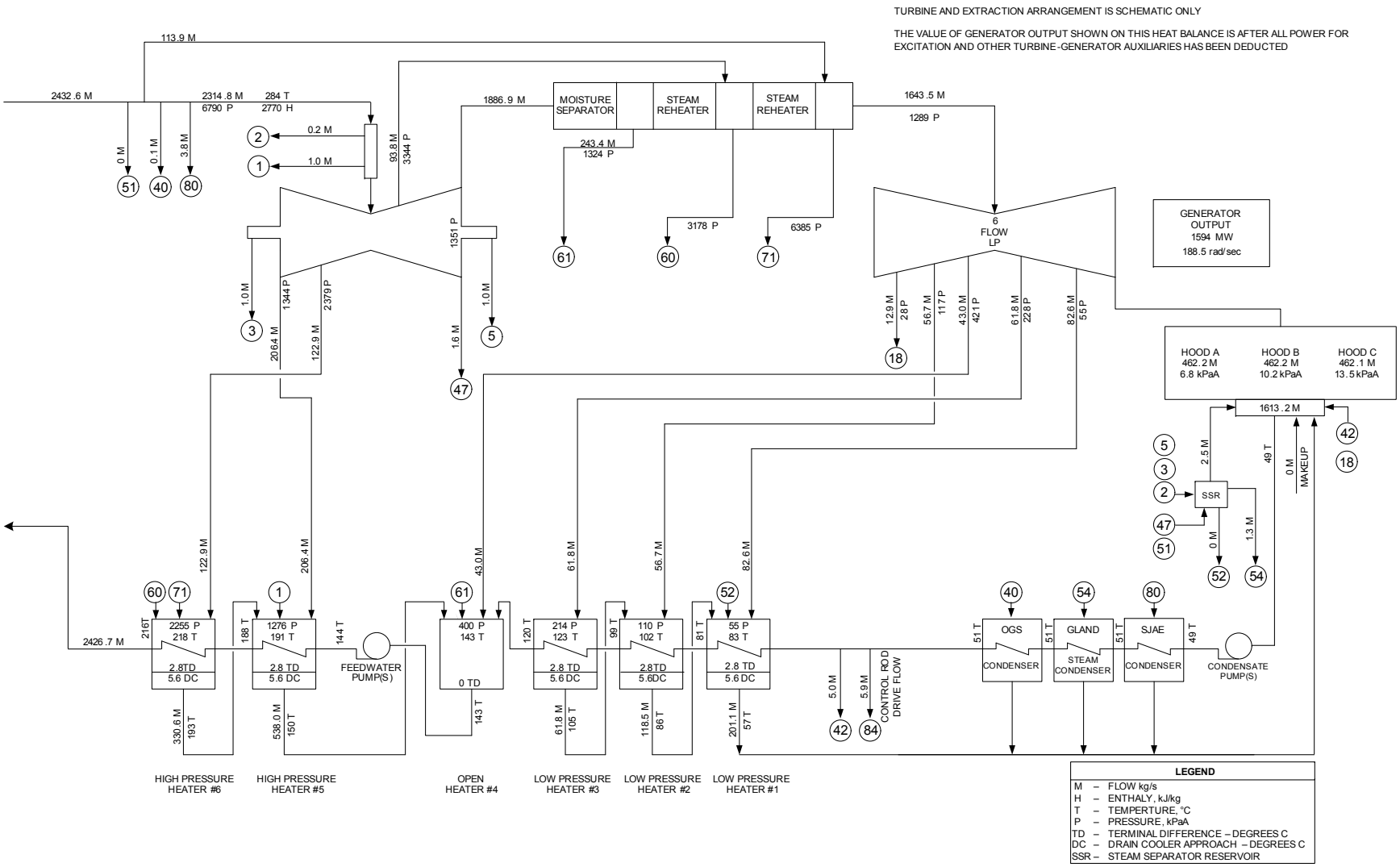
TURBINE AND EXTRACTION ARRANGEMENT IS SCHEMATIC ONLY
THE VALUE OF GENERATOR OUTPUT SHOWN ON THIS HEAT BALANCE IS AFTER ALL POWER FOR EXCITATION AND OTHER TURBINE-GENERATOR AUXILIARIES HAS BEEN DEDUCTED
MOISTURE SEPARATOR
STEAM REHEATER
STEAM REHEATER
6 FLOW LP
GENERATOR OUTPUT 1594 MW 188.5 rad/sec
HOOD A 462.2 M 6.8 kPaA
HOOD B 462.2 M 10.2 kPaA
HOOD C 462.1 M 13.5 kPaA
SSR
MAKEUP
FEEDWATER PUMP(S)
OGS CONDENSER
GLAND STEAM CONDENSER
SJAE CONDENSER
CONDENSATE PUMP(S)
CONTROL ROD DRIVE FLOW
HIGH PRESSURE HEATER #6
HIGH PRESSURE HEATER #5
OPEN HEATER #4
LOW PRESSURE HEATER #3
LOW PRESSURE HEATER #2
LOW PRESSURE HEATER #1
LEGEND
M – FLOW kg/s
H – ENTHALY, kJ/kg
T – TEMPERTURE, °C
P – PRESSURE, kPaA
TD – TERMINAL DIFFERENCE – DEGREES C
DC – DRAIN COOLER APPROACH – DEGREES C
SSR – STEAM SEPARATOR RESERVOIR

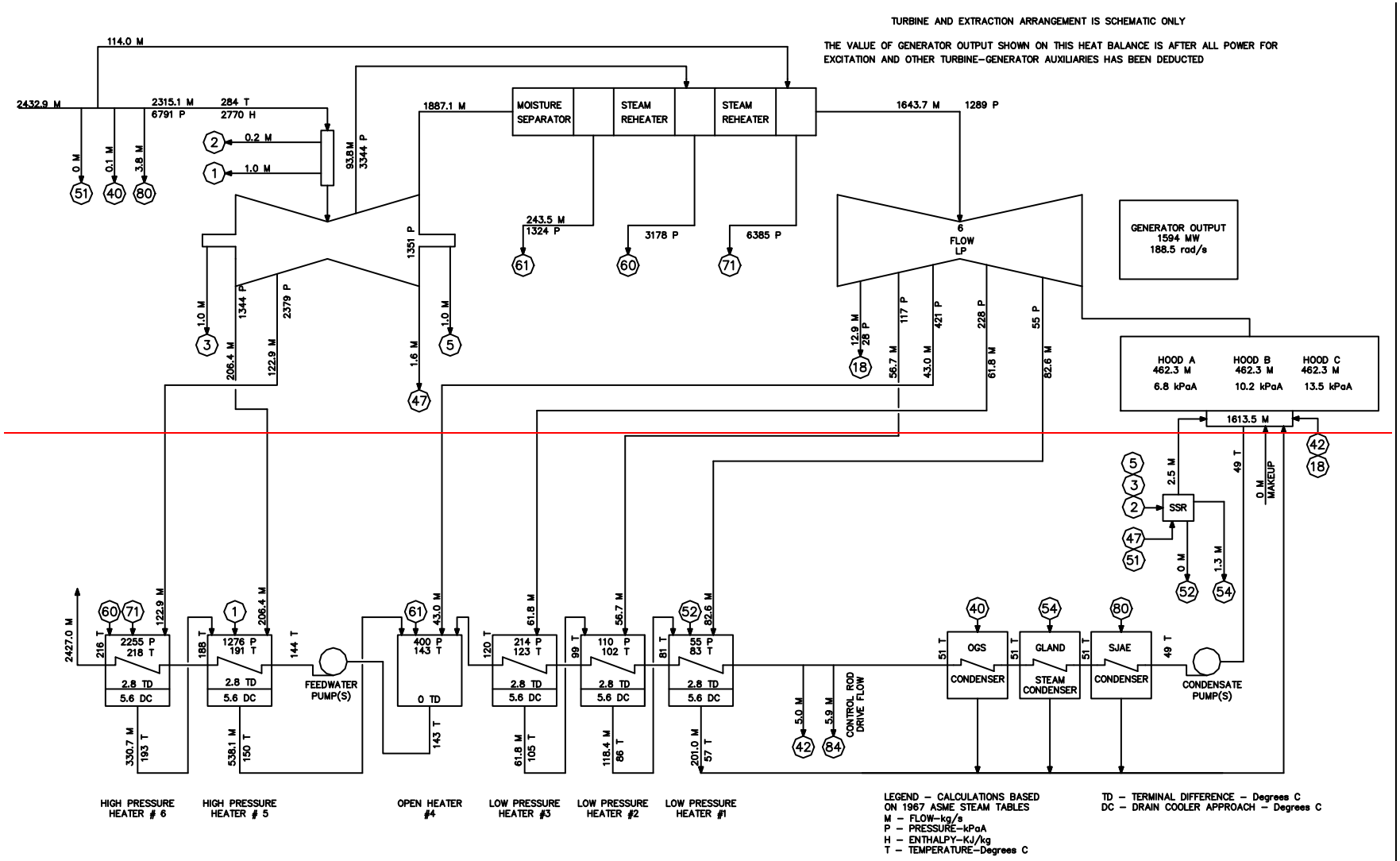

~~LEGEND: SSR = Steam Separator Reservoir~~

Figure 10.1-2a. Rated Heat Balance (SI Units)~~[RC52]~~

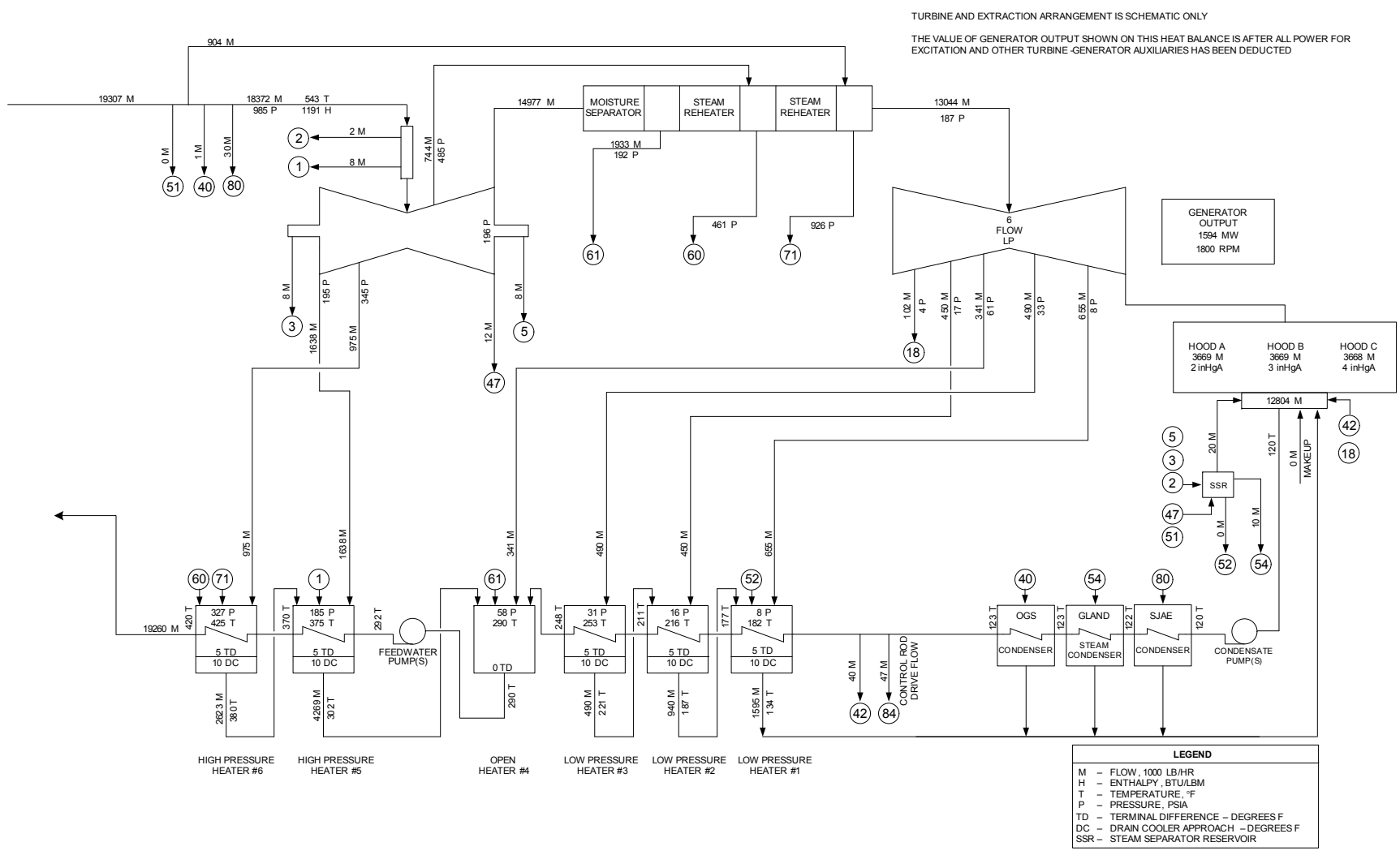
TURBINE AND EXTRACTION ARRANGEMENT IS SCHEMATIC ONLY
THE VALUE OF GENERATOR OUTPUT SHOWN ON THIS HEAT BALANCE IS AFTER ALL POWER FOR EXCITATION AND OTHER TURBINE -GENERATOR AUXILIARIES HAS BEEN DEDUCTED
904 M
19307 M
18372 M
985 P
543 T
1191 H
14977 M
13044 M
187 P
MOISTURE SEPARATOR
STEAM REHEATER
STEAM REHEATER
1933 M
192 P
461 P
926 P
6 FLOW LP
GENERATOR OUTPUT 1594 MW 1800 RPM
HOOD A 3669 M 2 inHgA
HOOD B 3669 M 3 inHgA
HOOD C 3668 M 4 inHgA
12804 M
SSR
MAKEUP
19260 M
327 P 425 T
185 P 375 T
58 P 290 T
31 P 253 T
16 P 216 T
8 P 182 T
5 TD 10 DC
0 TD
FEEDWATER PUMP(S)
OGS
GLAND
SJAE
CONDENSER
STEAM CONDENSER
CONDENSER
CONDENSATE PUMP(S)
CONTROL ROD DRIVE FLOW
HIGH PRESSURE HEATER #6
HIGH PRESSURE HEATER #5
OPEN HEATER #4
LOW PRESSURE HEATER #3
LOW PRESSURE HEATER #2
LOW PRESSURE HEATER #1
LEGEND
M – FLOW, 1000 LB/HR
H – ENTHALPY, BTU/LBM
T – TEMPERATURE, °F
P – PRESSURE, PSIA
TD – TERMINAL DIFFERENCE – DEGREES F
DC – DRAIN COOLER APPROACH – DEGREES F
SSR – STEAM SEPARATOR RESERVOIR

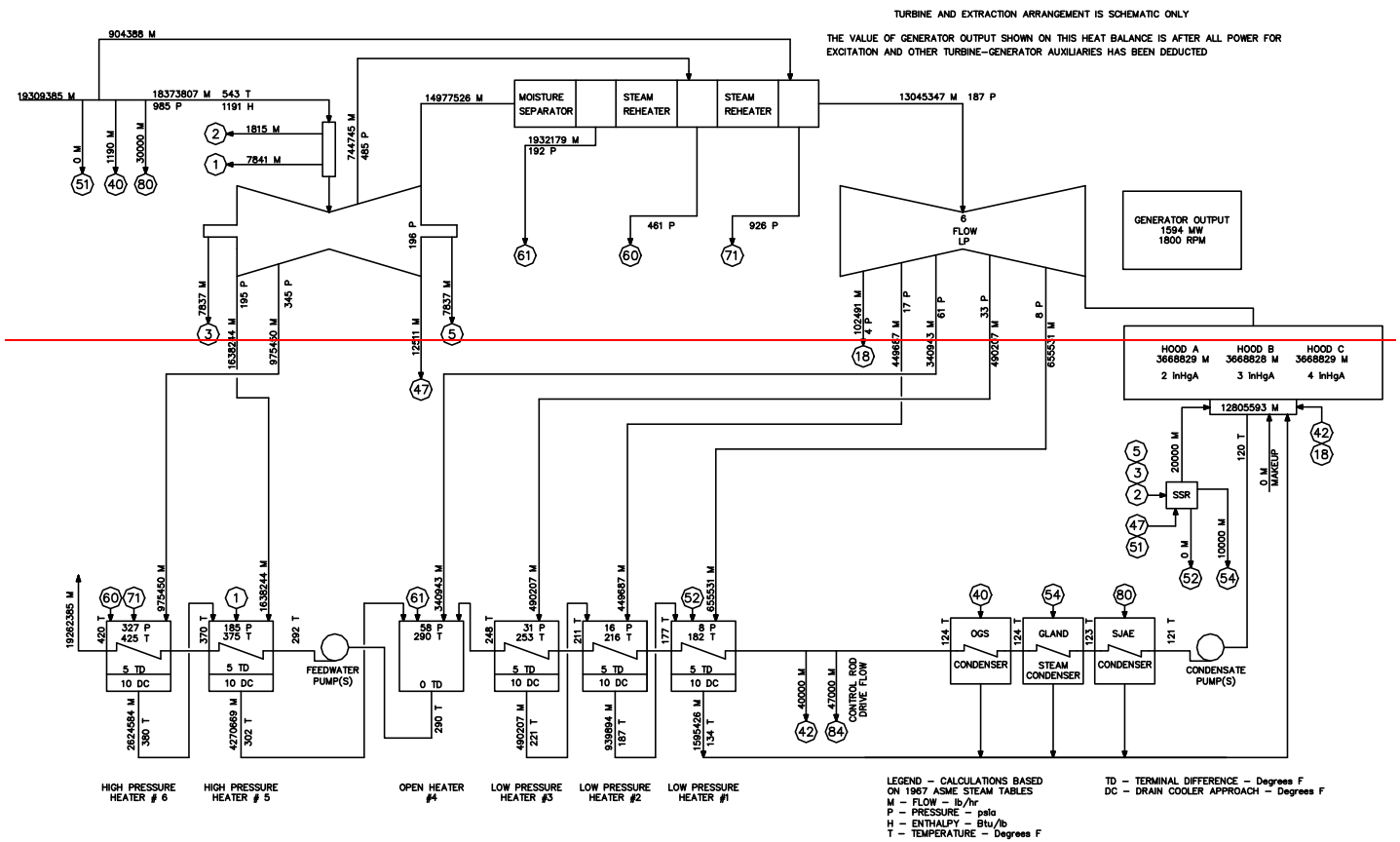

~~LEGEND: SSR = Steam Separator Reservoir~~

Figure 10.1-2b. Rated Heat Balance (English Units)

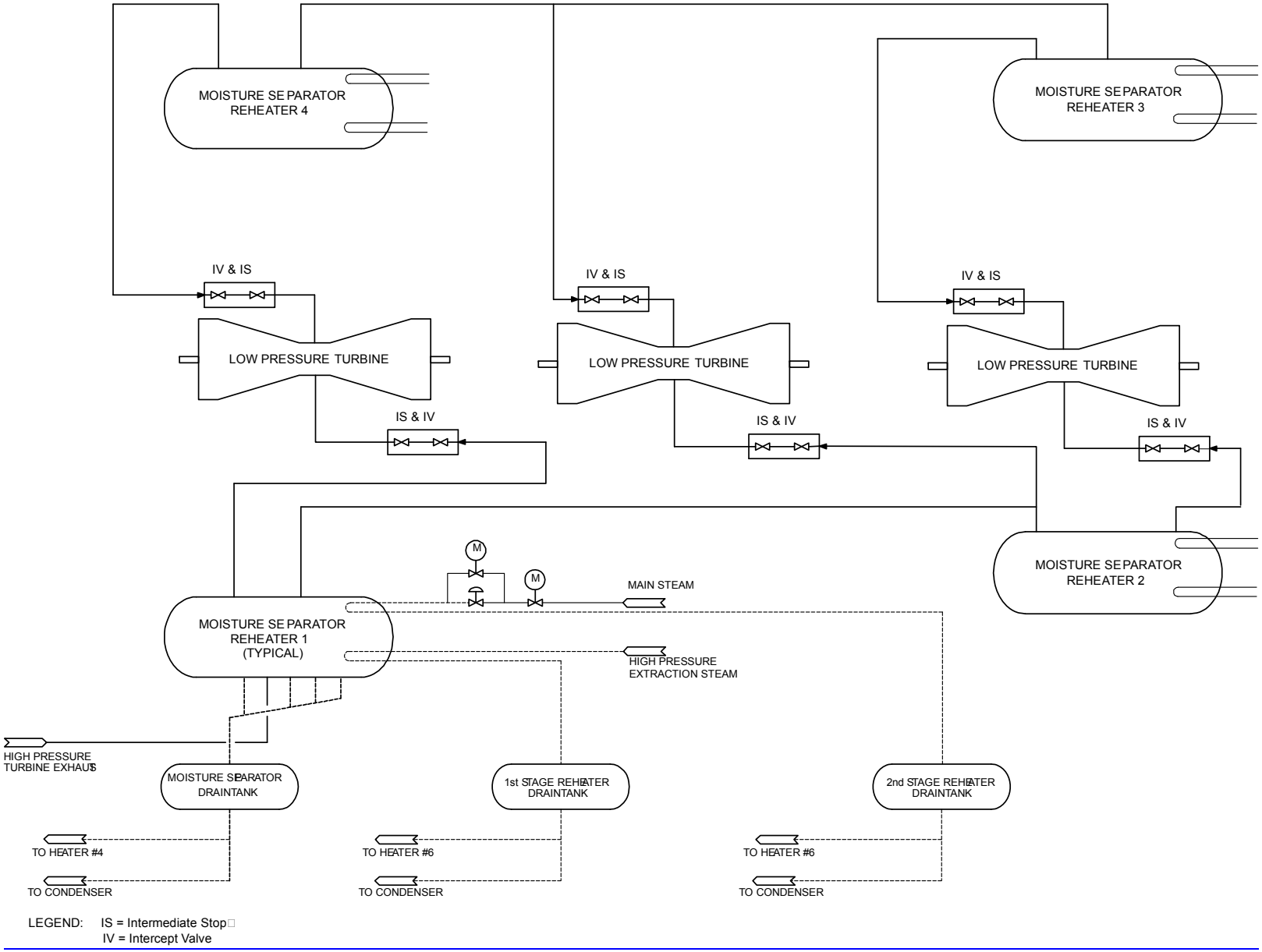
MOISTURE SEPARATOR REHEATER 4
MOISTURE SEPARATOR REHEATER 3
IV & IS
IV & IS
IV & IS
LOW PRESSURE TURBINE
LOW PRESSURE TURBINE
LOW PRESSURE TURBINE
IS & IV
IS & IV
IS & IV
M
M
MAIN STEAM
MOISTURE SEPARATOR REHEATER 2
MOISTURE SEPARATOR REHEATER 1 (TYPICAL)
HIGH PRESSURE EXTRACTION STEAM
HIGH PRESSURE TURBINE EXHAUST
MOISTURE SEPARATOR DRAIN TANK
1st STAGE REHEATER DRAIN TANK
2nd STAGE REHEATER DRAIN TANK
TO HEATER #4
TO HEATER #6
TO HEATER #6
TO CONDENSER
TO CONDENSER
TO CONDENSER
LEGEND: IS = Intermediate Stop
IV = Intercept Valve

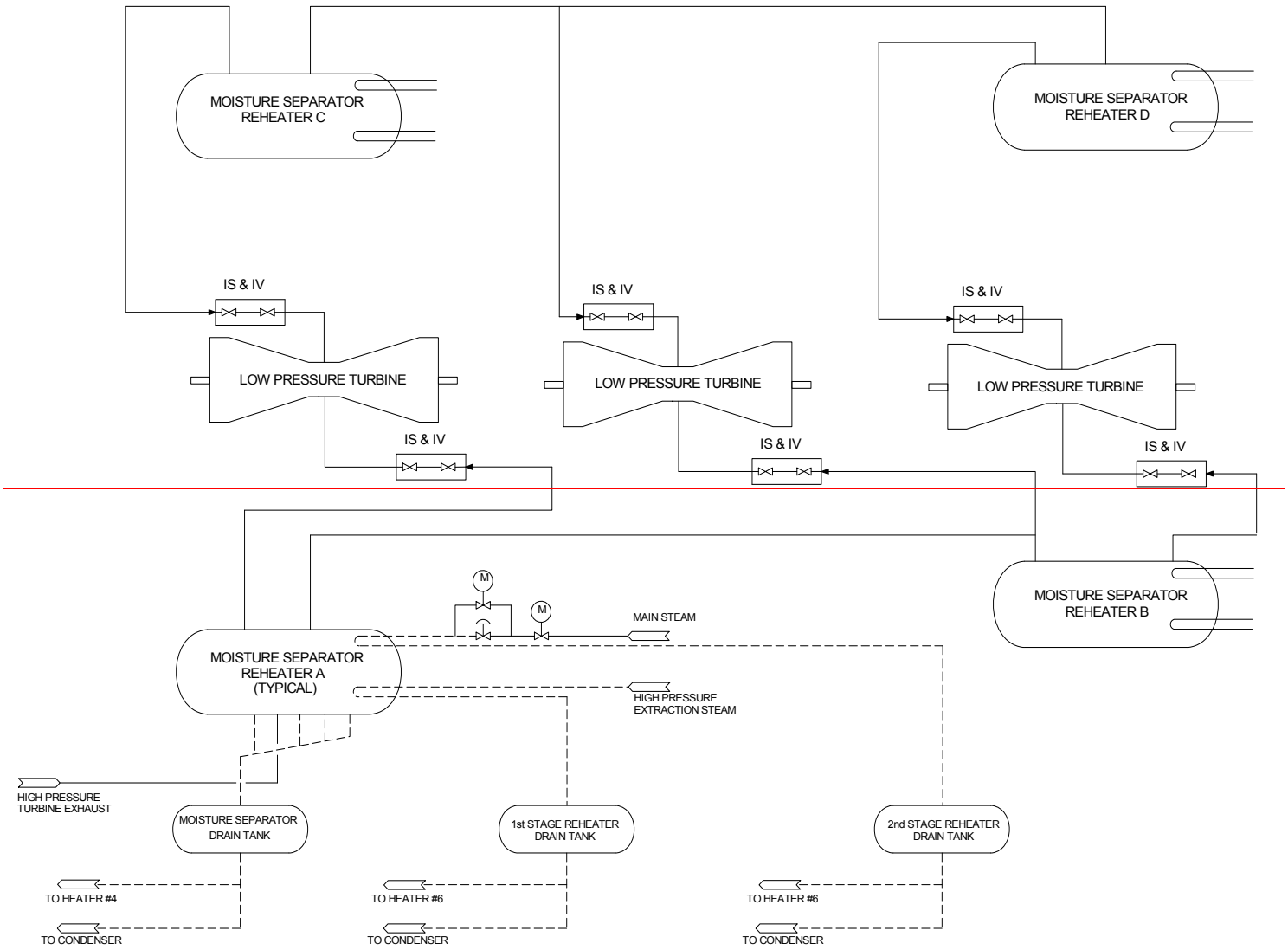

LEGEND: IS = Intermediate Stop
IV = Intercept Valve

Figure 10.3-2. Main Turbine System