12 PROBABILISTIC FIRE ANALYSIS

Contents

12.1 INTRODUCTION 12.1-1
12.2 METHODOLOGY AND ASSUMPTIONS 12.2-1
12.2.1 General Assumptions 12.2-1
12.2.2 Task 1 Plant Partitioning Assumptions: 12.2-2
12.2.3 Task 2 Component Selection Assumptions: 12.2-2
12.2.4 Task 3 Cable Selection Assumptions: 12.2-3
12.2.5 Task 6 Fire Ignition Frequencies Assumptions: 12.2-4
12.2.6 Qualitative Evaluation for Seismic/Fire Interaction Issues 12.2-6
12.2.6.1 Evaluation of Issue #1 – Seismically Induced Fires 12.2-6
12.2.6.2 Evaluation of Issue #2 – Degradation of Fire Suppression Systems and Features 12.2-7
12.2.6.3 Evaluation of Issue #3 – Spurious Operation of Suppression and or Detection Systems 12.2-7
12.2.6.4 Evaluation of Issue #4 – Degradation of Manual Fire Fighting Effectiveness 12.2-7
12.3 IDENTIFICATION OF PLANT FIRE AREAS 12.3-1
12.3.1 Separation Criteria 12.3-1
12.3.2 Plant Fire Areas 12.3-2
12.3.2.1 Reactor Building 12.3-3
12.3.2.2 Fuel Building 12.3-3
12.3.2.3 Control Building 12.3-3
12.3.2.4 Turbine Building 12.3-4
12.3.2.5 Electrical Building 12.3-4
12.3.2.6 Radwaste Building 12.3-4
12.3.2.7 Yard Area 12.3-4
12.3.3 Fire Propagation 12.3-4
12.4 COMPONENT SELECTION 12.4-1
12.4.1 Component Selection for Full-Power Condition 12.4-1
12.4.2 Component Selection for Shutdown Condition 12.4-2
12.5 CABLE SELECTION 12.5-1
12.6 QUALITATIVE SCREENING 12.6-1
12.6.1 Qualitative Screening for Full-Power Conditions 12.6-1
12.6.1.1 Evaluation of Potential Fire-Induced Spurious Valve Actuations Causing LOCA or Incorrect Valve Lineup 12.6-1
12.6.1.2 Evaluation of Potential Fire-Induced Spurious Valve Actuations Causing ISLOCA 12.6-2
12.6.1.3 Evaluation of Potential Fire-Induced Spurious SRV Actuations 12.6-2
12.6.1.4 Evaluation of Potential Smoke Damage 12.6-3

12.6.2 Qualitative Screening for Shutdown Conditions 12.6-5
12.7 CALCULATION OF THE FIRE IGNITION FREQUENCY 12.7-1
12.7.1 Calculation of the Full Power Fire Ignition Frequency 12.7-1
12.7.2 Calculation of the Shutdown Fire Ignition Frequency 12.7-2
12.8 CALCULATION OF CORE DAMAGE FREQUENCIES AND LARGE RELEASE FREQUENCIES 12.8-1
12.8.1 Modifications to Internal Events PRA Models 12.8-1
12.8.2 Development of Fire-Induced Risk Model 12.8-1
12.8.3 Calculation of Full-Power Core Damage Frequencies 12.8-2
12.8.3.1 Control Building, Q-DCIS Electrical Rooms 12.8-2
12.8.3.2 Control Building, N-DCIS Electrical Rooms and DPS Room 12.8-2
12.8.3.3 Main Control Room 12.8-2
12.8.3.4 Reactor Building Divisional Zones 12.8-3
12.8.3.5 Non-divisional Areas of Electrical Building 12.8-3
12.8.3.6 Turbine Building 12.8-4
12.8.3.7 Other Buildings 12.8-4
12.8.3.8 Fire Propagation Scenarios 12.8-4
12.8.4 Calculation of Shutdown Core Damage Frequencies 12.8-5
12.8.4.1 Turbine Building General Area (F4197) 12.8-5
12.8.4.2 Switchyard 12.8-6
12.8.4.3 Fire Propagation Scenarios 12.8-6
12.8.4.4 Other Considerations 12.8-6
12.8.5 Calculation of Large Release Frequencies 12.8-7
12.9 RESULTS 12.9-17
12.9.1 Baseline Fire PRA Results 12.9-17
12.9.2 Sensitivity Study Fire PRA Results 12.9-17
12.10 INSIGHTS 12.10-1
12.10.1 Insights from Full-Power Fire CDF and LRF Models 12.10-1
12.10.2 Insights from Shutdown Fire CDF Model 12.10-1
12.10.3 Insights from Sensitivity Studies 12.10-2
12.10.3.1 Insights on Fire Watches for Breached Fire Barriers under Shutdown Conditions 12.10-2
12.10.4 Key Insights and Assumptions 12.10-4
12.11 CONCLUSIONS 12.11-1
12.12 REFERENCES 12.12-1

List of Tables

Table 12.3-1 ESBWR Plant Partitioning for Probabilistic Fire Analysis 12.3-6
Table 12.3-2 Adjacent Fire Areas Evaluated for Fire Propagation Under Full Power Conditions 12.3-10
Table 12.6-1 Evaluation of Potential Applicability of Initiating Events in Internal Events 12.6-7
Table 12.6-2 Qualitative Screening Results for Full-Power Conditions 12.6-9
Table 12.6-3 Evaluation of Potential Applicability of Initiating Events in Internal Events PRA Model to Fire PRA under Shutdown Conditions 12.6-14
Table 12.7-1 Ignition Source Type Bins from NUREG/CR-6850 Table 6-1 ..... 12.7-4
Table 12.7-2 Plant Locations and Location Weighting Factors 12.7-6
Table 12.7-3 Template for Fire Compartment Ignition Source Data Sheet (ISDS) 12.7-8
Table 12.7-4 Summary of Fire Ignition Frequencies for Unscreened Fire Areas 12.7-11
Table 12.7-5 Shutdown Fire Frequencies By Plant Location 12.7-14
Table 12.7-6 Shutdown Fire Frequencies By Fire Area 12.7-15
Table 12.7-7 Operating Mode Durations 12.7-16
Table 12.7-8 Shutdown Fire Ignition Frequencies Per Operating Mode 12.7-17
Table 12.8-1 Damage States for Postulated Full-Power Fire Scenarios 12.8-8
Table 12.8-2 Damage States for Postulated Shutdown Fire Scenarios 12.8-13
Table 12.9-1 Full Power Core Damage Frequency Due to Internal Fires 12.9-19
Table 12.9-2 Full Power Large Release Frequency Due to Internal Fires 12.9-25
Table 12.9-3 Shutdown Core Damage Frequency Due to Internal Fires 12.9-30
Table 12.9-4 Cutset Report (Top 200) for Full-Power Core Damage Frequencies Due to Internal Fires 12.9-31
Table 12.9-5 Cutset Report (Top 200) for Shutdown Core Damage Frequencies Due to Internal Fires 12.9-59
Table 12.9-6 Importance Measure Report for Full-Power Core Damage Frequencies Due to Internal Fires 12.9-93
Table 12.9-7 Importance Measure Report for Shutdown Core Damage Frequencies Due to Internal Fire 12.9-146

12 PROBABILISTIC FIRE ANALYSIS

This section documents the internal fire PRA analysis for the ESBWR plant.

12.1 INTRODUCTION

The probabilistic fire analysis is performed with reasonable assumptions since the specifics of cable routings, ignition sources, or target locations in each zone of the plant are still in the design phase. Because of this limitation, a simplified, conservative, and bounding approach is used in this analysis.

The aim of the analysis is to show that core damage frequency (CDF) and large release frequency (LRF) due to fire are not significant contributors to ESBWR risks.

The scope of the analysis includes both at-power and shutdown fire-induced accident scenarios.

12.2 METHODOLOGY AND ASSUMPTIONS

The ESBWR internal fires probabilistic risk assessment is performed according to the guidance in NUREG/CR-6850 (EPRI 1011989), EPRI/NRC-RES Fire PRA Methodology for Nuclear Power Facilities, as applicable (Reference 12-1). NUREG/CR-6850 documents state-of-the-art methods, tools, and data for the conduct of a fire Probabilistic Risk Assessment (PRA) for a commercial nuclear power plant (NPP) application. The methods have been developed under the Fire Risk Requantification Study. This study was conducted as a joint activity between the Electric Power Research Institute (EPRI) and the U.S. Nuclear Regulatory Commission (NRC) Office of Nuclear Regulatory Research (RES) under the terms of an NRC/EPRI Memorandum of Understanding and an accompanying Fire Research Addendum.

For ESBWR Fire PRA (FPRA) model development, the following NUREG/CR-6850 tasks are applicable:

- Task 1: Plant Boundary & Partitioning
- Task 2: Fire PRA Component Selection
- Task 3: Fire PRA Cable Selection
- Task 4: Qualitative Screening
- Task 5: Fire-Induced Risk Model
- Task 6: Fire Ignition Frequencies
- Task 7: Quantitative Screening

Subsequent tasks are performed with simplification. Seismic-fire interaction (Task 13) is qualitatively addressed in Subsection 12.2.6. Support Task A (Plant Walk Downs) is not performed since ESBWR plant is still in the design certification phase. Support Task B (Fire PRA Database) is performed with an ACCESS database that includes all the tables that are necessary to develop a fire PRA model.

Fire ignition frequencies for power operation at each area are estimated, using the NUREG/CR-6850 methodology and data. Fire frequencies for shutdown conditions are estimated using the information included in Reference 12-2.

For a postulated fire, a list of the impacted components is generated with the mapping defined in the fire PRA database. A list of impacted fibers and cables is also generated with the assumed cable routing. The cable routing is assumed based on the modeled PRA components, their supports, and the cabinet locations from instrumentation and control designs.

Fires are conservatively assumed to propagate unmitigated in each fire area (no suppression is credited) and damage all functions in the fire area. The internal events PRA accident sequence structures and system fault trees and success criteria are used in the calculation of the fire CDF and LRF.

12.2.1 General Assumptions

The fire risk analysis is performed using conservative assumptions due, in part, to the stage of the design. The key conservative assumptions are summarized below:

(1) A fire ignition in any fire area may grow into a fully-developed fire.

(2) The analysis does not take credit for any fire suppression (i.e., self-extinguishment, installed suppression systems, nor manual fire fighting activities). Therefore, the analysis assumes that all fires disable all potentially affected equipment in the area.

(3) The analysis does not take credit for the distance between fire sources and targets.

(4) The analysis assumes that all fire-induced equipment damage occurs at t=0.

(5) Design requirements have been implemented to prevent spurious actuations induced by a fire in a single fire area in the reactor building that could adversely affect safe shutdown. Several fire propagation cases in the Reactor Building are conservatively assumed to result in the inadvertent opening of relief valves (IORV) initiating event.

Other assumptions are listed in the following paragraphs with respect to the specific tasks.

12.2.2 Task 1 Plant Partitioning Assumptions:

Since the insights from fire PRA analysis are impacting the detailed designs, the following assumptions are made in the fire PRA analysis as a result of that process:

(6) Per DCD Tier 2, Subsection 9A.4.9, the Service Water/Water Treatment Building (SF/WT) contains Service Water equipment, which has Regulatory Treatment of Non-Safety Systems (RTNSS) functions. Fire barriers of three hour minimum fire resistance rating shall be provided separating redundant RTNSS trains. Therefore, fire areas F7300A and F7300B are assumed to replace the existing fire area F7300 for the SF/WT building.

(7) In Table 12.3-1, fire area FSWYD is assumed , which is used to evaluate a postulated fire in the switchyard area that is conservatively assumed to result in a loss of preferred power (LOPP) without potential for recovery.

12.2.3 Task 2 Component Selection Assumptions:

The following assumptions are made in this task:

(8) The main control room (MCR) controls will be connected to the DCIS rooms (unaffected by a main control room fire) via fiber cables and that the loss (including melting) of the fibers or visual display units (VDUs) will not cause inadvertent actuations nor affect the automatic actuations associated with safety and non-safety equipment.

(9) The ESBWR plant is designed to prevent spurious actuations induced by a fire in a single fire area that could adversely affect the capability to achieve and maintain safe shutdown.

   a. The ESBWR design features as described in DCD Tier 2, Subsection 7.1.3 help minimize the adverse affect on safe shutdown from fire-induced spurious actuations. First, the ESBWR instrumentation and control system is digital. A spurious signal cannot be induced by fire damage in a fiber optic cable. The hard wires are minimized to limit the consequences of a postulated fire. The communication links between the main control room (MCR) and the DCIS rooms do not include any copper or other wire conductors that could potentially cause fire-induced spurious actuations that could adversely affect safe shutdown. From the DCIS rooms to the components, fiber optics will also be used up to the Remote Multiplexing Units (RMUs) in the plant. Hard wires

then are used to control the subject components. The exposure of the distributed control and information system (DCIS) equipment to heat and smoke caused by a fire in a single fire area does not cause spurious actuations that could adversely affect safe shutdown.

b. ESBWR plant has a passive design that the safety systems do not have active components such as the high-pressure injection pumps in the traditional plant designs. For the high/low pressure interfaces, multiple check valves are included which prevent the opening of the path even if a spurious actuation should occur after a fire. DCD Tier 2, Subsection 7.6.1 describes the HP/LP system interlock function.

The following assumptions are used to address the additional consideration of the fire impact on equipment credited in the shutdown PRA model:

(10) Although fire areas F3301 and F3302 are well separated by the corridor F3100, it is conservatively assumed that fire propagation could occur via two pairs of fire doors with a fire barrier failure probability of 2*7.4E-3*7.4E-3 = 1.1E-4. Similarly, although RWCU pump rooms are well separated, it is conservatively assumed that a fire propagation could occur via the fire door at elevation 4650 between fire areas F1152 and F1162, which could fail the controls to both RWCU trains. The fire barrier failure probability for this case is then assumed to be 7.4E-3. Losses of both RCCWS trains, both chilled water trains and both PIP buses due to fire propagation are also assumed to result in loss of RWCU. One fire door exists between fire areas F4250 and F4260 and between F4550 and F4560. Thus a fire barrier failure rate of 7.4E-3 is assumed. Fire areas F5350 & F5360 are separated by a corridor (fire area F5100). It is conservatively assumed that fire propagation could occur via four pairs of fire doors with a fire barrier failure probability of 4*7.4E-3*7.4E-3 = 2.2E-4.

(11) The fire areas in the electrical building are well separated. Fire propagation from one area to another in the electrical building would not cause LOPP until it propagates to a third area, which is not considered per the guidance. Fire propagation between the two cable tunnels could result in a scenario similar to LOPP. Since the fire barriers between the two tunnels are walls and sealed penetrations, a fire barrier failure probability of 1.2E-3 is used. A fire in switchyard is conservatively assumed to result in a loss of preferred offsite power.

(12) A fire propagation in the Service Water / Water Treatment Building (fire areas F7300A and F7300B) is assumed to result in loss of service water. A fire barrier failure rate of 7.4E-3 is assumed. A fire propagation case with both F3301 and F3302 would result in a loss of service water. However, it is determined that the loss of RWCU initiator would be bounding for shutdown scenarios.

(13) A fire is assumed to cause failure of all fire-susceptible components in the subject fire area. Recovery to the failed system(s) after the postulated fire is not credited.

12.2.4 Task 3 Cable Selection Assumptions:

The following assumptions/considerations are applied in this task:

(14) Based on the plant general arrangement drawings with component locations, cable routing is postulated for PRA purposes. A list of cables is generated from system model database

that includes all modeled supports for PRA components included in the system models. This list captures the majority of cables, especially for risk-important components.

(15) For some cables, their failure may only fail one of multiple inputs to the component, which does not impact its function. Therefore, a cable to component mapping cannot accurately model the actual failure mechanism. For these cables, a special mapping from the cables to the fault tree gates that model the divisional actuation logic is generated.

(16) Fibers are assumed to connect RMUs to their corresponding control cabinets in the DCIS rooms. Hard wires are assumed to connect the components to RMUs. To prevent spurious actuations induced by a fire in a single fire area that could adversely affect safe shutdown, multiple load drivers per component are designed to be located in different fire areas.

(17) It is assumed that there will be no controls in the MCR that can induce undesirable spurious operations that affect the PRA. The HFE process ultimately decides the hard-wired controls in the MCR. At this time, the SCRAM and MSIV closure will have hard-wired controls in the MCR. In the full-power PRA models, the operator action to manually scram the reactor is credited. A MCR fire is not assumed to impact this operator action since this operator action is skill-based and will be performed as operator's first response to an accident. The HFE group has been recommended not to include other hard-wired controls because of the potential for spurious operations due to fires.

(18) The postulated cable routing obeys the separation criteria.

a. The safety-related Q-DCIS cables will originate from the Q-DCIS divisional room in the control building and pass through its own divisional duct bank, then connect to its divisional cable chase in the reactor building.

b. The nonsafety-related N-DCIS cables will originate from the N-DCIS rooms in the control building and pass through the nonsafety-related cable tunnels, and connect to rooms in the reactor building, turbine building, or electrical building.

c. If the N-DCIS cable has to pass through the divisional rooms in reactor building, it is assumed that Q-DCIS Div 1 and 3 rooms can be used for N-DCIS Train A and Div 2 and 4 used for Train B.

d. The DPS load drivers in the Reactor Building are assumed to be divided into two groups, whose locations and cable routing follow the separation criteria of PIP A and B components and cables.

12.2.5 Task 6 Fire Ignition Frequencies Assumptions:

Per NUREG/CR-6850, the fire analysis model for full-power conditions described in this task is based on the following assumptions.

(19) Fire ignition frequencies remain constant over time.

(20) Among the plants, total ignition frequency is the same for the same equipment type, regardless of differences in the quantity and characteristics of the equipment type that may exist among the plants.

The above assumptions are conservative since the ESBWR design will have significantly lower numbers of pumps, motors and other active components.

(21) Within each plant, the likelihood of fire ignition is the same across an equipment type. For example, pumps are assumed to have the same fire ignition frequency regardless of size, usage level, working environment, etc.

The following are other assumptions used in the fire ignition frequency calculations:

(22) The fire ignition frequencies are evaluated with the best available design information. The design inputs are subject to changes as a result of more detailed designs and PRA insights. However, it is reasonable to assume that the major components and their locations have been well designed and will not have significant changes in the final designs.

(23) It is assumed that all ignition source type bins are applicable to the ESBWR plant with the following exceptions:

a. Bins 02 and 03 are not applicable since they are used for PWR plants.

b. Bin 22 for RPS MG sets is not applicable to ESBWR plants.

(24) Bin 04 is assumed to be applicable to the main control room although the ESBWR main control room design is completely digital as opposed to the traditional electro-mechanical designs.

(25) Bin 14 includes the traveling screens. MOV and fan motors are not counted since their power rating is typically smaller than 5 horsepower. Additionally, MOVs are only energized during valve actuation.

(26) The buses, load centers, breakers, inverters, and rectifiers are included in the electrical cabinet (bin 15) counts. Multiple vertical segments for a switchgear section are hard to evaluate at this time since those segments could be associated with the breakers or local displays. Therefore, each bus or breaker is also counted as one cabinet.

(27) Ignition frequency from bin 29 (transformer yard, other) is omitted because the yard fire frequency (fire area FSWYD) is taken from report RES/OERAB/S02-01 (Reference 12-2).

(28) For bins 13, 17, 19, 20, 30, simplified assumptions are made as follows:

a. Two dryers are assumed (bin 13). However, it is assumed that these dryers will not be located in the fire areas included in the FPRA model.

b. Two hydrogen tanks are assumed (bin 17). These two tanks are located in the yard area.

c. Misc. hydrogen fires (bin 19) and off-gas/H2 recombiners (bin 20) are not estimated.

d. Two boilers are assumed (bin 30) and they are in separate fire areas that have been screened.

(29) Although the ESBWR plant may be located with the existing nuclear power plants, the plant location weighting factors are assumed to be 1 because the ESBWR plant is designed as a single-unit plant with no shared buildings.

(30) Since the ESBWR plant is still in design phase, the count of components are performed with the modeled PRA components. This approach is very conservative since the non-PRA components are typically going to greatly increase the number of total sources and reduce the “per component” ignition frequencies.

(31) Since the plant has not operated and no history on the maintenance activity is available, the weighting factor evaluation is simplified. It is assumed that all compartments have the same transient fire influencing factors. This is conservative since the high risk areas are going to have tighter controls. Potential exceptions are the main control room (fire area F3270) and the turbine building general area (fire area F4197). The main control room typically has high occupancy and the bin 7 (transient) count is increased to 10. The turbine building general area covers a large portion of the turbine building and would expect high maintenance activity and high occupancy all the time. For conservatism, the weighting factor for this area (for bins 36 and 37) is increased by a factor of 10.

(32) The bins for cable fires, cable run and junction boxes are estimated with the cable routing information postulated in the cable selection task.

(33) For main control room and DCIS room fire ignition frequency calculations, additional non-PRA transformers, cabinets, and AHUs are counted, which are shown on the general arrangement drawings. This is conservative since the total counts of those components are based on the PRA components only.

(34) During shutdown conditions, a fire barrier may not be intact due to maintenance activities. However, an added fire watch would not only increase the success probability of fire detection and suppression, but also help restore the fire barrier in time to prevent fire propagation. Shutdown fire risks related to the fire barriers are evaluated and managed in accordance with the outage risk management program of 10CFR50.65(a)(4).

Because of the compounding conservative assumptions associated with the fire PRA, it is inappropriate to add the fire CDF or LRF results to the internal events results.

12.2.6 Qualitative Evaluation for Seismic/Fire Interaction Issues

This subsection qualitatively evaluates the following four seismic/fire interaction issues:

(1) Seismically induced fires,

(2) Degradation of fire suppression systems and features,

(3) Spurious operation of suppression and or detection systems, and

(4) Degradation of manual firefighting effectiveness.

There are no accepted methods for quantifying the risk contribution of the above issues and the qualitative approach is considered acceptable.

12.2.6.1 Evaluation of Issue #1 – Seismically Induced Fires

Unique seismically induced fire ignition source scenarios may exist. However, a plant walkdown is impossible for ESBWR unit in the design certification phase. Therefore, the following qualitative evaluation is based on the ESBWR design requirements.

Per DCD Tier 2, Subsection 3.2, ESBWR structures, systems and components (SSCs) are categorized as safety-related (as defined in 10 CFR 50.2) or nonsafety-related. Safety-related SSCs conform to the quality assurance requirements of Appendix B to 10 CFR 50. Nonsafety-related SSCs have quality assurance requirements applied commensurate with the importance of the item's function. The quality assurance program is described in DCD Tier 2, Chapter 17.

The Seismic Category I structures, systems, and components are designed to withstand the appropriate seismic loads (as discussed in Subsection 3.7) in combination with other appropriate loads without loss of function or pressure integrity. The seismic classifications indicated in Table 3.2-1 are consistent with the guidelines of Regulatory Guide 1.29.

The ESBWR complies with 10 CFR 50, Appendix A, General Design Criterion (GDC) 2, as the safety-related SSCs are designed to withstand the effects of earthquakes without loss of capability to perform their safety-related functions. Specific requirements for seismic design and quality group classifications are identified for these ESBWR items commensurate with their safety classification. DCD Tier 2, Table 3.2-1 identifies these classifications for ESBWR structures, systems and components. DCD Tier 2, Table 3.2-2 lists the minimum safety class requirements.

Structures, systems and components that perform no safety-related function, but whose structural failure or interaction could degrade the functioning of a Seismic Category I item to an unacceptable level of safety or could result in incapacitating injury to occupants of the Main Control Room, are designated Seismic Category II. These items are designed to structurally withstand the effects of an SSE.

Structures, systems, and components that are not categorized as Seismic Category I or II are designated Seismic Category NS. NS (non-seismic) structures and equipment are designed for seismic requirements in accordance with the International Building Code (IBC).

Based on above ESBWR design requirements, the issue associated with the seismically induced fires has been adequately addressed.

12.2.6.2 Evaluation of Issue #2 – Degradation of Fire Suppression Systems and Features

After a postulated seismic event, the fire suppression systems and features are going to be degraded (e.g., rupture or unavailability). There is also a potential for common-cause failure of multiple fire suppression systems due to the seismically induced failure of supporting systems.

For ESBWR fire PRA analysis, a bounding approach is taken, which takes no credit for the fire suppression systems and features. Therefore, the effects of seismic-induced degradation of fire suppression systems and features have been addressed in the current fire PRA analysis.

12.2.6.3 Evaluation of Issue #3 – Spurious Operation of Suppression and or Detection Systems

Spurious operation during an earthquake could result in potential for flooding relative to water-based fire suppression systems, loss of habitability for gaseous suppression systems, and the potential for diversion of suppressants from areas where they might be needed. The spurious actuation of fire suppression systems has been evaluated in the internal flooding analysis. The potential diversion of suppressants has no impact on the current fire PRA analysis because no credit for fire suppression is taken.

12.2.6.4 Evaluation of Issue #4 – Degradation of Manual Fire Fighting Effectiveness

The effectiveness of manual fire fighting will be impacted after an earthquake. However, the degradation has no impact on the current fire PRA analysis because no credit for fire suppression is taken.

12.3 IDENTIFICATION OF PLANT FIRE AREAS

This section discusses the division of the plant into fire areas for the purpose of the probabilistic internal fires analysis. This division considers separation design criteria and the systems considered significant to the risk profile. The separation design criteria and the resulting fire areas are discussed below.

The plant layout drawings for fire areas and fire boundaries are included in DCD Tier 2, Section 9A (Figures 9A.2-1 through 9A.2-33). Table 9A.5-1 through 9A.5-7 in DCD Tier 2, Section 9A list additional information for these fire areas (Reference 12-4).

A fire in the switchyard could result in a plant trip if it results in loss of preferred power. Such scenario has been included in the fire PRA model with a conservative assumption that any fire in the switchyard would result in a reactor trip. For consistency and conservatism, a fire frequency of 1.8E-2/year and 5.2E-2/shutdown-year based on RES/OERAB/S01-01 has been used (Reference 12-2). This is double counting since the fire events that could result in a plant trip have been included in the loss of preferred power initiator (the switchyard-related portion of initiator %T-LOPP) in the internal events PRA models. Therefore, the inclusion of these fire scenarios in fire PRA model is conservative.

12.3.1 Separation Criteria

The "Electrical Equipment Separation" design specification provides the basic criteria concerning separation, both physical and electrical, of redundant safety equipment. These specifications are as follows:

- NRC Regulatory Guide 1.75 and IEEE Standard 384 require physical separation and electrical isolation. In addition, the more stringent NRC Policy Statement SECY-89-013 (Paragraph 2.3.c) requires capability for safe shutdown assuming all equipment in any one fire area has been rendered inoperable by fire. In all areas except the Control Room and the primary containment, redundant electrical divisions should be placed in different fire areas separated by fire barriers rated in accordance with the Fire Prevention and Protection Specification.
- Exceptions are anticipated, but must be individually justified. The Control Room is exempted on condition that independent alternate shutdown capability is provided that is physically and electrically independent of the Control Room (i.e., the Remote Shutdown System). The primary containment design should ensure, to as great an extent as possible, that one shutdown division is free of fire damage.

Fire protection is achieved through an adequate balance of the following objectives:

- To prevent fires from starting;
- To rapidly detect, control, and extinguish promptly those fires that do occur; and
- To provide protection for structures, systems, and components important to safety so that a fire that is not promptly extinguished by the fire suppression activities does not prevent the safe shutdown of the plant and does not significantly increase the risk of radioactive release to the environment.

This fire PRA considers only the mitigation of fires by designs; suppression is not credited in the analysis.

The plant is divided into separate fire areas. Redundant cables and equipment are separated with fire barriers to limit damage caused by a fire in any single fire area. This separation provides a means to ensure that there is sufficient capacity to perform safety functions in case of fire.

Fire barriers of 3-hour fire resistance rating are provided in the ESBWR plant design that separate:

- Safety-related systems from any potential fires in nonsafety-related areas that could affect the ability of safety-related systems to perform their safety function.
- Redundant divisions or trains of safety-related systems from each other to prevent damage that could adversely affect a safe shutdown function from a single fire.
- Components within a single safety-related electrical division that present a fire hazard to components in another safety-related division.
- Electrical circuits (safety-related and nonsafety-related) whose fire-induced failure could cause a spurious actuation that could adversely affect a safe shutdown function.

The application of these separation criteria ensures an adequate independence of each safety system division, such that a fire in a single fire area can only affect one safety system division. These criteria are used in this analysis to support definitions of the major fire areas.

ESBWR nonsafety-related systems covered under the RTNSS program are designed with similar separation considerations.

12.3.2 Plant Fire Areas

The global plant analysis boundary uses all of the fire areas defined in DCD Tier 2, Chapter 9 (Reference 12-4), which covers the entire protected area. All fire areas defined in the Fire Hazard Analysis (FHA) are included in the plant boundary. These fire areas are used to map to physical rooms and then to components.

Table 12.3-1 summarizes a total of 148 fire areas based on the FHA tables with the exceptions described as follows.

Primary containment is not a significant fire area because it is inerted during plant operation. During shutdown the primary containment is not inerted; however, the small quantity of combustible materials and spatial separation prevent damage to the redundant divisional circuits in this area. The Level 2 PRA considers de-inerted operation prior to and following shutdown as described in NEDO-33201, Subsection 8.1.4.

Fire areas F7300A and F7300B are assumed to replace the existing fire area F7300 for the SF/WT building per assumption #6. Fire area FSWYD to used to evaluate a postulated fire in the switchyard area per assumption #7.

The FHA fire areas are grouped in the plant locations described as follows.

12.3.2.1 Reactor Building

This building houses all safety-related structures, systems and components (SSCs), except for the main control room, safety-related distributed control and information system equipment rooms and spent fuel storage pool. This includes the reactor, containment, equipment rooms/compartments outside containment, the refueling area with the fuel buffer pool, and auxiliary equipment area.

- The reactor building contains cabinets and electrical equipment associated with each of the safety-related divisions. This electrical equipment includes the batteries and the DC distribution panels for all safety-related equipment. The electrical equipment is distributed on different elevations within the Reactor Building. Each division is located in a separate fire area, which in some cases include areas on more than one elevation. Each divisional fire area is bounded on all sides by three-hour rated fire barriers. Likewise, it is also assumed that the routing of associated cables respects the separation criteria. It is assumed that all fires in a divisional fire area results in the immediate loss of function of that division.
- The Reactor Building also contains nonsafety-related systems that are credited in the PRA models, such as the Reactor Water Cleanup (RWCU) and the Control Rod Drive (CRD) systems.

The fire areas in reactor building are named as "F1XXX."

12.3.2.2 Fuel Building

This building houses the spent fuel storage pool, its auxiliary equipment and the lower end of the fuel transfer machine. The fuel and auxiliary pools cooling system (FAPCS) equipment is mainly located in the fuel building.

The fire areas in fuel building are named as "F2XXX."

12.3.2.3 Control Building

This building houses the main control room and all safety-related controls outside the reactor building.

- The safety-related Q-DCIS cabinet areas contain the control and information cabinets of the four safety divisions in the control building. Each of the four safety divisions is located in a separate fire area. These areas contain the equipment needed for the actuation of safety systems.
- The nonsafety-related N-DCIS cabinet areas are divided into two separate fire areas.
- The ESBWR main control room (MCR) is designed differently from a traditional plant. There is no electrical system protection equipment in the MCR and the MCR fire does not result in the loss of offsite power (or the loss of the diesels).
- The DPS cabinet is located in a separate fire area in the control building. A preliminary fire PRA analysis model with DPS cabinet located inside room 3301 showed that the fire risk in fire area F3301 would be the dominant contributor to all fire risks. The combination of the high failure probability of common cause failure of

software for the safety system and the failure of DPS with multiple nonsafety-related systems impacted by a fire in room 3301 results in unacceptable plant risk. With a separate fire area for the proposed DPS cabinet in the detailed design, the fire risk is significantly reduced.

The fire areas in control building are named as "F3XXX."

12.3.2.4 Turbine Building

This building houses equipment associated with the main turbine and generator and their auxiliary systems and equipment including the condensate purification system and the process offgas treatment system. Other nonsafety-related systems modeled in PRA models are located in turbine building:

- Feedwater and condensate system;
- Reactor component cooling water system;
- Turbine component cooling water system;
- Instrument air system; and
- Service water system.

The fire areas in turbine building are named as "F4XXX."

12.3.2.5 Electrical Building

This building houses the plant generation (PG) and plant investment protection (PIP) switchgears. It also includes the nonsafety-related batteries and two nonsafety-related standby diesel generators and their associated auxiliary equipment.

The fire areas in electrical building are named as "F5XXX."

12.3.2.6 Radwaste Building

This building houses equipment associated with the collection and processing of solid and liquid radioactive waste generated by the plant. No PRA components are included in the radwaste building, so the building is excluded from the analysis.

The fire areas in radwaste building are named as "F6XXX."

12.3.2.7 Yard Area

The yard area includes other fire areas located outside the buildings described above. The fire area names in the yard area range from "F4XXX" to F9XXX."

12.3.3 Fire Propagation

Fire propagation cases are postulated for the majority of the fire areas under the full power condition, which are listed in Table 12.3-2. Some fire areas are not postulated for fire propagation for the following reasons:

(1) The fire-induced core damage frequencies in these fire areas are negligible,

(2) The subject fire area has no adjacent fire areas (e.g., some fire areas located in the yard).

For potentially risk-significant fire areas, typically the exposing area and exposed areas are reversed to construct two fire propagation scenarios. Some fire propagation cases do not have their reversed scenarios because they are not significant risk contributors. Moreover, the inclusion of some cases is simply to demonstrate that these postulated fire propagation scenarios are not risk significant (especially the propagation scenarios that change the initiating event from T-GEN to T-IORV). It is not intended to postulate all potential fire propagation scenarios.

With the conservative assumption that a postulated fire will damage all fire-susceptible equipment in the affected fire areas, the most risk-significant case of the fire propagation paths is chosen when the fire can spread in multiple ways. Three types of fire barriers are used based on NUREG/CR-6850 Table 11-3:

- Type 1 - fire, security, and water tight doors with a failure probability of 7.4E-03
- Type 2 - fire and ventilation dampers with a failure probability of 2.7E-03
- Type 3 - penetration seals and fire walls with a failure probability of 1.2E-03

For shutdown cases, the fire propagation cases are postulated in the identification of shutdown initiating events. More conservative assumptions have been made to postulate a fire that can be propagated to multiple areas, which defeats the redundancy in the systems and results in one of the shutdown initiating events.

Table 12.3-1

ESBWR Plant Partitioning for Probabilistic Fire Analysis

FireArea	Description	Building
F1104	Elevator A	Reactor
F1105	Elevator C	Reactor
F1110	HCU A	Reactor
F1120	HCU C	Reactor
F1130	HCU B	Reactor
F1140	HCU D	Reactor
F1150	Nonsafety NW quadrant	Reactor
F1152	Nonsafety NE quadrant	Reactor
F1160	Nonsafety SW quadrant	Reactor
F1162	Nonsafety SE quadrant	Reactor
F1170	Drywell and Containment	Reactor
F1190	Stairwell A	Reactor
F1191	Stairwell B	Reactor
F1192	Stairwell C	Reactor
F1193	Stairwell D	Reactor
F1194	Elevator B	Reactor
F1195	Interior Stairwell A	Reactor
F1196	Interior Stairwell B	Reactor
F1197	Interior Stairwell C	Reactor
F1198	Interior Stairwell D	Reactor
F1203	CRD and Containment Access	Reactor
F1210	Division 1 Battery	Reactor
F1220	Division 2 Battery	Reactor
F1230	Division 3 Battery	Reactor
F1240	Division 4 Battery	Reactor
F1262	B Demineralizers	Reactor
F1311	Division 1 Electrical	Reactor
F1321	Division 2 Electrical	Reactor
F1331	Division 3 Electrical	Reactor
F1341	Division 4 Electrical	Reactor
F1450	Hydrogen Gas A	Reactor
F1460	Hydrogen Gas B	Reactor
F1600	Refueling Floor and Common Access	Reactor
F1770	Main Steam Tunnel	Reactor
F19101	Electric Motor Driven G21 Pump	Other
F19150	Primary Electric Motor Driven Fire Pump	Other
F19160	Primary Diesel Driven Fire Pump	Other
F19161	Primary Diesel Fire Pump Fuel Oil Storage Tank	Other
F2100	New and Spent Fuel Handling	Fuel

Table 12.3-1

ESBWR Plant Partitioning for Probabilistic Fire Analysis

FireArea	Description	Building
F2192	Elevator A	Fuel
F2193	Stairwell A	Fuel
F2490	Stairwell B	Fuel
F2600	HVAC Penthouse A	Fuel
F2601	HVAC Penthouse B	Fuel
F3100	Corridor A	Control
F3101	Corridor B	Control
F3110	Division 1 Electrical	Control
F3120	Division 2 Electrical	Control
F3130	Division 3 Electrical	Control
F3140	Division 4 Electrical	Control
F3150	DPS Control Room	Control
F3190	Stairwell A	Control
F3191	Elevator A	Control
F3192	Stairwell B	Control
F3270	Main Control Room Complex	Control
F3301	Nonsafety-Related Electrical Train A	Control
F3302	Nonsafety-Related Electrical Train B	Control
F39151	Ancillary Diesel Generator A/Fuel Oil Storage	Other
F39161	Ancillary Diesel Generator B/Fuel Oil Storage	Other
F39252	Ancillary Generator A	Other
F39253	ADG Electrical & Control Equipment Room B	Other
F39262	Ancillary Diesel Generator B	Other
F39263	ADG Electrical & Control Equipment room A	Other
F4190	Elevator (Freight)	Turbine
F4191	Stairwell A	Turbine
F4192	Elevator (Personal)	Turbine
F4193	Stairwell B	Turbine
F4194	Stairwell C	Turbine
F4195	Stairwell D	Turbine
F4196	Charcoal Adsorbers	Turbine
F4197	Turbine Equipment	Turbine
F4201	Lube Oil Storage	Other
F4202	Hydrogen Storage	Other
F4250	Reactor Component Cooling Water A	Turbine
F4260	Reactor Component Cooling Water B	Turbine
F4271	Phase A Main Transformer	Other
F4272	Phase B Main Transformer	Other
F4273	Phase C Main Transformer	Other
F4274	Spare Main Transformer	Other

Table 12.3-1

ESBWR Plant Partitioning for Probabilistic Fire Analysis

FireArea	Description	Building
F4302	Instrument Air / Service Air Train A	Turbine
F4303	Instrument Air / Service Air Train B	Turbine
F4403	Turbine Lube Oil	Turbine
F4550	Chilled Water A	Turbine
F4560	Chilled Water B	Turbine
F4650	Water Surge Tanks A (CWS & RCCWS)	Turbine
F4660	Water Surge Tanks B (CWS & RCCWS)	Turbine
F5100	Corridors	Electrical
F5104	Fire Protection Equipment	Electrical
F5151	Batteries A	Electrical
F5153	Diesel Generator A	Electrical
F5154	Cable Chase Train A	Electrical
F5157	Reserve Auxiliary Transformer A	Other
F5158	Unit Auxiliary Transformer A	Other
F5159	Fuel Oil Storage A	Other
F5161	Batteries B	Electrical
F5163	Diesel Generator B	Electrical
F5164	Cable Chase Train B	Electrical
F5167	Reserve Auxiliary Transformer B	Other
F5168	Unit Auxiliary Transformer B	Other
F5169	Fuel Oil Storage B	Other
F5180	Technical Support Center Complex	Electrical
F5190	Elevator (Freight)	Electrical
F5191	Elevator (Personnel)	Electrical
F5192	Stairwell A	Electrical
F5193	Stairwell B	Electrical
F5194	Stairwell C	Electrical
F5201	Switchgear, Lower Cable & Battery Charger I	Electrical
F5202	Battery C	Electrical
F5203	LC & Battery Charger III	Electrical
F5204	Switchgear, Lower Cable & Battery Charger II	Electrical
F5205	Electronic Equipment	Electrical
F5250	Day Tank A	Electrical
F5251	Diesel Generator Electrical & Control Equipment Room A	Electrical
F5260	Day Tank B	Electrical
F5261	Diesel Generator Electrical & Control Equipment Room B	Electrical
F5350	Electrical Equipment A	Electrical
F5360	Electrical Equipment B	Electrical
F5450	HVAC TSC & EER Equipment A	Electrical
F5460	HVAC TSC & EER Equipment B	Electrical

Table 12.3-1

ESBWR Plant Partitioning for Probabilistic Fire Analysis

FireArea	Description	Building
F6101	Radwaste Handling Equipment	Radwaste
F6102	Electrical Equipment	Radwaste
F6190	Elevator	Radwaste
F6191	Stairwell A	Radwaste
F6192	Stairwell B	Radwaste
F6193	Stairwell C	Radwaste
F6194	Stairwell D	Radwaste
F6270	Radwaste Control Room Complex	Radwaste
F6290	Stairwell E	Radwaste
F6301	HVAC Equipment	Radwaste
F7100	Pump House	Other
F7150	Secondary Nonseismic Diesel Fire Pump	Other
F7160	Secondary Nonseismic Motor-driven Fire Pump	Other
F7180	Guard House	Other
F7200	Hot Machine Shop & Storage	Other
F7300A	Service Water / Water Treatment Building Train A	Other
F7300B	Service Water / Water Treatment Building Train B	Other
F7400	Cold Machine Shop	Other
F7500	Warehouse	Other
F7600	Training Center	Other
F7700	Service Building	Other
F7800	Auxiliary Boiler Building	Other
F7900	Administration Building	Other
F9101	Uncontrolled Access	Other
F9150	Cable Tunnel A	Other
F9160	Cable Tunnel B	Other
F9190	Controlled Access	Other
F9201	Controlled Access	Other
FSWYD	Switchyard (assumed)	Other

Table 12.3-2

Adjacent Fire Areas Evaluated for Fire Propagation Under Full Power Conditions

#	Exposing Area	Exposed Area	Most Limiting Boundary
1	F1210	F1150	dampers
2	F1210	F1230	doors
3	F1210	F1240	doors
4	F1210	F1311	wall or penetration seal
5	F1220	F1162	dampers
6	F1220	F1203	wall or penetration seal
7	F1220	F1230	doors
8	F1220	F1240	doors
9	F1220	F1321	wall or penetration seal
10	F1230	F1152	dampers
11	F1230	F1210	doors
12	F1230	F1220	doors
13	F1230	F1262	wall or penetration seal
14	F1230	F1331	wall or penetration seal
15	F1240	F1160	dampers
16	F1240	F1210	doors
17	F1240	F1220	doors
18	F1240	F1341	wall or penetration seal
19	F1311	F1150	dampers
20	F1311	F1210	wall or penetration seal
21	F1311	F1331	doors
22	F1311	F1341	doors
23	F1321	F1162	dampers
24	F1321	F1203	doors
25	F1321	F1220	wall or penetration seal
26	F1321	F1341	doors
27	F1331	F1152	dampers
28	F1331	F1203	doors
29	F1331	F1230	wall or penetration seal
30	F1331	F1311	doors
31	F1341	F1160	dampers
32	F1341	F1240	wall or penetration seal
33	F1341	F1311	doors
34	F1341	F1321	doors
35	F3110	F3100	doors
36	F3110	F3130	wall or penetration seal
37	F3110	F3270	dampers
38	F3110	F3301	dampers
39	F3110	F3302	wall or penetration seal
40	F3120	F3101	doors
41	F3120	F3140	wall or penetration seal

Table 12.3-2

Adjacent Fire Areas Evaluated for Fire Propagation Under Full Power Conditions

#	Exposing Area	Exposed Area	Most Limiting Boundary
42	F3120	F3270	wall or penetration seal
43	F3130	F3100	wall or penetration seal
44	F3130	F3101	doors
45	F3130	F3110	wall or penetration seal
46	F3130	F3270	dampers
47	F3130	F3302	dampers
48	F3140	F3100	doors
49	F3140	F3120	wall or penetration seal
50	F3140	F3270	wall or penetration seal
51	F3150	F3100	wall or penetration seal
52	F3150	F3301	doors
53	F3150	F3302	wall or penetration seal
54	F3301	F3100	doors
55	F3301	F3101	dampers
56	F3301	F3110	wall or penetration seal
57	F3301	F3130	wall or penetration seal
58	F3301	F3150	doors
59	F3301	F3270	wall or penetration seal
60	F3302	F3100	doors
61	F3302	F3110	wall or penetration seal
62	F3302	F3130	wall or penetration seal
63	F3302	F3270	wall or penetration seal
64	F3302	F9150	wall or penetration seal
65	F4197	F1770	wall or penetration seal
66	F4197	F4250	doors
67	F4197	F4260	doors
68	F4197	F4302	doors
69	F4197	F4303	doors
70	F4197	F4403	wall or penetration seal
71	F4197	F4550	doors
72	F4197	F4560	doors
73	F4403	F4197	doors
74	F5151	F5100	doors
75	F5151	F5201	wall or penetration seal
76	F5153	F5100	wall or penetration seal
77	F5153	F5203	wall or penetration seal
78	F5153	F5250	wall or penetration seal
79	F5154	F5100	wall or penetration seal
80	F5154	F5164	wall or penetration seal
81	F5154	F5205	wall or penetration seal
82	F5163	F5100	wall or penetration seal
83	F5163	F5205	wall or penetration seal

Table 12.3-2

Adjacent Fire Areas Evaluated for Fire Propagation Under Full Power Conditions

#	Exposing Area	Exposed Area	Most Limiting Boundary
84	F5163	F5260	wall or penetration seal
85	F5164	F5100	wall or penetration seal
86	F5164	F5154	wall or penetration seal
87	F5201	F5100	doors
88	F5201	F5151	wall or penetration seal
89	F5201	F5202	doors
90	F5201	F5350	wall or penetration seal
91	F5202	F5100	doors
92	F5202	F5201	doors
93	F5202	F5203	doors
94	F5202	F5350	wall or penetration seal
95	F5203	F5100	doors
96	F5203	F5153	wall or penetration seal
97	F5203	F5202	doors
98	F5203	F5250	wall or penetration seal
99	F5203	F5350	wall or penetration seal
100	F5204	F5100	doors
101	F5204	F5161	wall or penetration seal
102	F5204	F5205	doors
103	F5204	F5360	wall or penetration seal
104	F5205	F5100	doors
105	F5205	F5161	wall or penetration seal
106	F5205	F5163	wall or penetration seal
107	F5205	F5204	doors
108	F5205	F5260	wall or penetration seal
109	F5205	F5360	wall or penetration seal
110	F5250	F5153	wall or penetration seal
111	F5250	F5203	wall or penetration seal
112	F5260	F5163	wall or penetration seal
113	F5260	F5205	wall or penetration seal
114	F5350	F5100	doors
115	F5350	F5201	wall or penetration seal
116	F5350	F5202	wall or penetration seal
117	F5350	F5203	wall or penetration seal
118	F5350	F5450	dampers
119	F5360	F5100	doors
120	F5360	F5204	wall or penetration seal
121	F5360	F5205	wall or penetration seal
122	F5360	F5460	dampers
123	F7300A	F7300B	wall or penetration seal
124	F7300B	F7300A	wall or penetration seal
125	F9150	F9160	wall or penetration seal

Table 12.3-2

Adjacent Fire Areas Evaluated for Fire Propagation Under Full Power Conditions

#	Exposing Area	Exposed Area	Most Limiting Boundary
126	F9160	F9150	wall or penetration seal

12.4 COMPONENT SELECTION

A list of components in the system models are investigated for the following major categories:

1. Equipment whose fire-induced failures will contribute to or otherwise cause an initiating event in FPRA (include spurious actuations);
2. Equipment supports the success of mitigating system functions; and
3. Equipment supports the success of operator actions to achieve and maintain safe shutdown (include spurious actuations).

The list of equipment located in each fire area and the cable routing information are included in NEDE/NEDO-33386 Rev. 1 Section 4 (Reference 12-5). The mapping from fire areas to rooms, then to components and basic events is based on the current detailed design drawings, which could be subject to changes. However, the separation criteria are implemented and no significant changes are expected in future modifications to the detailed designs.

The remote shutdown panels will be located in separate fire areas in the reactor building per DCD Tier 2, section 9A.4.3. Since the fire PRA model does not take credit for the remote shutdown panels for conservatism, the location of the remote shutdown panels is not critical to the current PRA model. Such conservatism can be removed when the detailed design provides the necessary information.

12.4.1 Component Selection for Full-Power Condition

The component selection task follows the guidance in NUREG/CR-6850. Some internal events PRA sequences are eliminated based on the guidance in NUREG/CR-6850 Table 2-1. Other considerations are listed as follows:

- ATWS sequences are included in ESBWR FPRA due to the relatively high contribution of ATWS sequences to the low CDF.
- Spurious actuations of SRVs and DPVs caused by a fire in a single fire area are prevented by the ESBWR design. However, T-IORV sequences are still considered for some fire propagation cases that could potentially defeat the design features to prevent spurious actuations.
- The internal events PRA model has minimized the efforts in modeling human actions for simplicity and conservatism. No additional consideration is necessary for all fire scenarios except the MCR fire, which could have additional delay. However, the ESBWR plants are designed to allow operators to perform their tasks at the remote shutdown panels where all controls would be available to them.

The cable routing is assumed with the currently designed plant general arrangement drawings with divisional separation. The instrumentation and control is assumed based on the preliminary designs on panels and RMUs.

A main control room fire is modeled by assuming failure of all manual actions.

The following are additional considerations on spurious actuation:

- The potential new sequences due to spurious actuation will be focused on the ISLOCA sequences since the fire could damage multiple cables to the MOVs in series, which would make ISLOCA sequences more significant in the FPRA models. However, in the ESBWR design on the high/low pressure interfaces, multiple check valves are included which prevent the opening of the path due to a spurious actuation after a fire.
- Another potential candidate is the spurious closing of the MSIVs due to the fire in a postulated area. However, the T-GEN sequences have already considered the loss of condenser due to the closure of MSIVs. Therefore, the fire should not introduce additional mitigating system failures.

Since human actions are minimally modeled, the impact of fire to additional mitigating equipment, instrumentation and diagnostic equipment important to human response is deemed to be insignificant.

With the current internal events PRA model, the potential risk-significant equipment is in the turbine building, where trains are not as well separated as in the safety-related systems. The safety-related systems have N-2 redundancies, which make these systems low significance contributors to CDF except for common cause failures. A fire that can propagate to other fire areas would result in more failures; however, the fire initiator frequencies would be so low that these postulated sequences would not be significant contributors either.

The FPRA component list is based on the database used for system modeling with the augmented information on mapping to PRA basic events, rooms, and cables summarized in NEDE/NEDO-33386 Rev 1 Table 4-1 (Reference 12-5). By grouping the components and their associated basic events with fire areas, it is easy to identify the fire-induced failures.

12.4.2 Component Selection for Shutdown Condition

The shutdown PRA model is constructed based on the Level 1 internal events PRA model. No new components are added in the system models. Therefore, the component selection follows the same process as described in the previous section except the evaluation of the applicability of shutdown initiating events to the shutdown fire PRA model.

Additional assumptions (10 – 13) are made for component selection under shutdown conditions.

12.5 CABLE SELECTION

Per NUREG/CR-6850, Tasks 3 (cable selection) and Task 9 (detailed circuit failure analysis) are recommended to be performed at the same time. Due to the limitation of the design, no detailed circuits are available for evaluation. However, the ESBWR digital instrument and control system designs will prevent spurious actuations caused by a fire in a single fire area that could adversely affect safe shutdown.

The list of equipment located in each fire area and the cable routing information are included in NEDE/NEDO-33386 Rev. 1 Section 4 (Reference 12-5). The cable routing is postulated for the PRA fire model under the guideline for separation criteria. Reasonable cable routing variations will not significantly impact the PRA results.

This task is performed based on the component support information in the PRA system model database and the general arrangement drawings. Simplified conservative assumptions are made for the potential impact of the failure of these cables to the relevant components. The cables are postulated based on the supports in system models. Mainly four types of cables are postulated:

Support Type	Cables Postulated	Cable Failure Induces Component Failure
Component Cooling		
Control Air		
Control Power	X	X
Control Signal	X	Depends (see note)
Motive Air		
Motive Nitrogen		
Motive Power	X	X
Powered Control Signal	X	Depends (see note)
Room Cooling		

Note: Some components are designed with redundant actuation control signals. Loss of one control signal caused by the postulated cable failure associated with a fire in a single fire area would not result in component failure.

Assumptions 14-18 are made for this task. NEDE/NEDO-33386 Tables 4-2 and 4-3 (Reference 12-5) summarize the cable routing and the rooms/fire areas on the cable routing paths.

12.6 QUALITATIVE SCREENING

12.6.1 Qualitative Screening for Full-Power Conditions

For full power conditions, Table 12.6-1 lists the applicable initiating events in the internal events PRA model and Table 12.6-2 lists all the fire areas with qualitative screening results. The qualitative screening process is performed with the following criteria:

(1) The area does not contain PRA equipment (or their associated circuits) identified in Fire PRA Tasks 2 and 3, and

(2) The area is such that fires in the area will not lead to:

a. an automatic trip, or

b. a manual trip as specified in fire procedures or plans, emergency operating procedures, or other plant policies, procedures and practices, or

c. a mandated controlled shutdown as prescribed by plant technical specifications because of invoking a limiting condition of operation (LCO).

As a result of the qualitative screening, 66 fire areas are not screened and require quantitative analysis.

12.6.1.1 Evaluation of Potential Fire-Induced Spurious Valve Actuations Causing LOCA or Incorrect Valve Lineup

In the internal events PRA model, the following additional events contribute to the LOCA frequencies in addition to pipe breaks for LOCA inside containment:

	Event	Contribution To
a.	Spurious actuation of one DPV	Medium Steam LOCA
b.	Spurious actuation two or more SRVs/DPVs	Large LOCA
c.	Spurious actuation of one GDCS Squib and failure of check valve	Medium Liquid LOCA

A single fire in any fire area will not result in spurious actuation of the subject valves to result in a LOCA. The ESBWR design features as described in DCD Tier 2, Subsection 7.1.3 help minimize the adverse affect on safe shutdown due to fire-induced spurious actuations. The ESBWR instrumentation and control system is digital. A spurious signal cannot be induced by the fire damages in a fiber optic cable. The hard wires are minimized to limit the consequences of a postulated fire. The main control room (MCR) communicates with the safety-related and nonsafety-related DCIS rooms with fiber optics. From the DCIS rooms to the components, fiber optics will also be used up to the Remote Multiplexing Units (RMUs) in the plant. Hard wires then are used to control the subject components. Two or three load drivers in series are actuated simultaneously in order to actuate the component. To eliminate spurious actuations, these multiple load drivers are located in different fire areas. Therefore, a fire in a single fire area cannot cause spurious actuations of all load drivers.

The existence of fire detection and suppression systems, fire barriers, and adequate monitoring and supervision means that it can be assumed that fire propagation to neighboring zones separated by those barriers is a relatively negligible contribution to risk. Nevertheless, potential fire propagation scenarios are included in the Fire PRA.

The squib valves used in ADS, GDCS, and SLCS are located inside the primary containment, and their firing mechanisms are not vulnerable to direct contact with a fire during at-power operations. Furthermore, the sensing and actuation circuitry is primarily digital with fiber-optic connections, and they are immune to the hot-shorting phenomena. A relatively minor amount of copper wiring exists from the Remote Multiplexing Units in the Reactor Building to the firing circuits inside the primary containment such that concurrent hot-shorts due to a fire are considered to be negligible. Moreover, the primary containment is inerted during at-power operations so there is negligible possibility for a fire-induced spurious actuation inside the containment during at-power operations.

12.6.1.2 Evaluation of Potential Fire-Induced Spurious Valve Actuations Causing ISLOCA

For intersystem LOCA (ISLOCA), there are two systems with penetration lines that did not screen.

- Main Steam Line Drains Upstream of the MSIVs
- Feedwater System (Line A)

The main steam line drains upstream of the MSIVs have multiple, normally closed valves including two containment isolation valves (one normally closed and the other normally open). The safety-related DCIS system is designed in a way that no single fire can spuriously actuate the containment isolation valves. Moreover, if spurious actuation had occurred on both valves, the drain is still isolated. The other normally closed valve downstream on the drain line is normally closed and it is unlikely to have a fire that can propagate across multiple fire areas to cause spurious actuations on both the containment isolation valves and the downstream valve.

For the high/low pressure interfaces on the feedwater system line A, multiple check valves are included, which prevent the opening of the path even if a spurious actuation should occur after a fire. DCD Tier 2, Subsection 7.6.1 describes the HP/LP system interlock function. Moreover, the detailed design has added the monitoring and alarm functions on the line between the check valve and the normally closed isolation valves to check for potential leakage to detect valve failure upstream. Therefore, the spurious actuation due to a postulated fire has negligible impact on the ISLOCA evaluations.

12.6.1.3 Evaluation of Potential Fire-Induced Spurious SRV Actuations

The reactor building is divided into four divisions for the safety-related system. For each division, multiple fire areas on different elevations are assigned to house multiple load drivers that are required to actuate the safety relief valves. Two load drivers in series are actuated simultaneously in order to actuate the component. This arrangement eliminates spurious actuations due to a postulated fire in a single fire area. Therefore, a fire in a single fire area cannot cause spurious actuation. DCD Tier 2, Subsection 7.3.1.1.2 states as follows:

> *Each of the trains (per division) of ADS start signals are sent to the load drivers/discrete outputs for the ADS SRVs and DPVs operated by that division. The load drivers/discrete*

outputs are wired in series for each valve such that each is required for operation. This scheme makes the logic single failure proof against inadvertent actuation.

Per DCD Tier 2, Subsection 7.3.1.1.2, each of the SRVs is equipped with four solenoid-operated pilot valves. Three solenoids receive Q-DCIS signal, the fourth is part of the DPS. The solenoid-operated pilot valves are powered by 250 VDC buses. The divisional safety-related power sources are located in the divisional batteries rooms. The power and control cables are physically separated from other divisions.

12.6.1.4 Evaluation of Potential Smoke Damage

(1) Potential Smoke Propagation Paths

Detailed HVAC system design information is not available. Based on the simplified HVAC system diagrams (Figures 9.4-1 through 9.4-13) included in DCD Tier 2, Subsection 9.4, the potential smoke propagation paths are identified as follows:

- **Control Room**: The control room ventilation system is separate from other rooms in the control building. Therefore there is no potential smoke propagation path between the control room and other rooms.
- **Control Building**: There are two trains of control building ventilation. With the failure of the smoke removal mode, smoke can potentially propagate among N-DCIS room A (fire area F3301), Div I and IV Q-DCIS rooms (fire areas F3110 and F3140), or among N-DCIS room B (fire area F3302), Div II and Div III Q-DCIS rooms (fire areas F3120 and F3130).
- **Fuel Building**: With the failure of exhaust fans, smoke could potentially propagate among all fuel building elevations. However, the FAPCS components are the only modeled PRA components in the fuel building. All components are assumed to be located in one fire area F2100. Therefore, the potential smoke propagation paths have no impact on fire analysis.
- **Turbine Building**: With the failure of exhaust fans, smoke could potentially propagate among all turbine building elevations. However, the turbine building covers very large open areas and should not result in high local concentrations of particles that can result in component failure. The RCCW system components are housed in separate fire areas and are designed with separation criteria such that no single fire can fail both trains. RCCW rooms have their own fan coil units that are cooled by the nuclear-island chilled water system. Therefore, the RCCW rooms can be isolated from the rest of the turbine building to ensure its operability after a postulated fire in the turbine building general area.
- **Reactor Building**: Three reactor building HVAC systems (CLAVS for clean areas, CONAVS for contaminated areas, and REPVAS for the refueling and pool area) are designed for the reactor building. With the failure of the smoke removal mode, certain reactor building levels can have smoke propagation. The drywell/containment ventilation system is not connected to the reactor building HVAC systems.
- **Electrical Building**: With the failure of the smoke removal mode, the electric and electronic rooms can have smoke propagation. The two trains are separated since

there are two HVAC sub-systems for redundancy. Diesel generator rooms have their own ventilation systems. There are no smoke propagation paths between the two diesel generator rooms and between the diesel generator rooms and the electrical building rooms.

(2) Design and Operational Features

The following design and operational features are used to mitigate the potential risk associated with smoke propagation:

Per DCD SubTier 2, 9.5.1.11, Fire protection/smoke control provisions for ventilation for the various building areas are designed as follows:

- Smoke control in accordance with NFPA 92A guidelines is provided for unsprinklered areas where the FHA identifies a potential for heavy smoke or heat conditions. Additionally, safe egress and safe smoke refuge areas during a fire incident are provided in accordance with NFPA 92A guidelines for building occupants and the fire brigade. NFPA 101 guidelines are utilized for the design and labeling of safe egress routes.
- Smoke removal meets NFPA 804 with exception to NFPA 804 Subsections 8.4.3 (3) and 8.4.3.2. Automatic sprinkler protection is provided for the high density cable tunnels, fuel oil tank rooms, diesel-generator rooms and a significant portion of the turbine building to limit heat and smoke generation. The COL Holder will establish provisions for manual smoke control by manual actions of the fire brigade for all plant areas in accordance with NFPA 804 guidelines.

The exceptions discussed in the second bullet above involve provisions from smoke removal in areas not completely protected by the automatic sprinkler system, which have no impact on this evaluation.

Smoke removal is provided by the Heating, Ventilating, and Air-Conditioning (HVAC) systems operating in smoke removal mode. Smoke will be removed by the normal HVAC system in smoke removal mode.

All ventilation duct openings in fire barriers will be protected by fire dampers as required by NFPA 90A.

In the detailed designs, a balanced HVAC and Q-DCIS system designs will be implemented to address both heat dissipation and smoke removal issues. The impact of a failure of the smoke removal system can be significantly mitigated if more separation is considered in the detailed HVAC designs. Some of the safety-related Q-DCIS circuit boards may be conformably coated for protection or protected by other equivalent methods (e.g., hermetically sealing equipment or qualifying with tests for smoke). Use of any of the methods described above would significantly reduce the potential of smoke damage to the Q-DCIS circuit boards.

(3) Assessing Smoke Propagation Risk

Based on the above discussions, the following is the risk evaluation on the potential smoke propagation paths if the smoke removal mode fails and fire dampers fail to isolate the subject area:

- N-DCIS room A (fire area F3301), Div I and IV Q-DCIS rooms (fire areas F3110 and F3140): The risk increase due to the additional failures for the postulated smoke damage is not significant since the ESBWR plant has N-2 redundancy in the safety system design. With the additional failure probability of the smoke removal mode and the failure of fire dampers to isolate, the risk contribution due to smoke propagation is negligible.
- N-DCIS room B (fire area F3302), Div II and Div III Q-DCIS rooms (fire areas F3120 and F3130): Same as above. The risk increase due to smoke propagation is negligible.
- Electric and electronic rooms in the electric building for each train of the electrical distribution system: The risk increase due to the additional failures for the postulated smoke damage is not significant since only one train of the electric system is impacted. With the additional failure probability of the smoke removal mode and the failure of fire dampers to isolate, the risk contribution due to smoke propagation is negligible.
- Different levels in the reactor building: The risk increase due to smoke damage, if assumed, combined with the failure of the smoke removal mode and the fire damper isolation is not significant with a balanced detailed HVAC system design (i.e., implementing separation criteria of reactor building HVAC subsystems, or coating some of the Q-DCIS circuit boards, or using other equivalent methods to protect them from the postulated smoke damages). Per NUREG/CR-6850 Appendix T, smoke damage, only one mode of component failure was found to be of potential risk significance, which is circuit bridging. By coating some of the Q-DCIS circuit boards or protected by other equivalent methods, the potential smoke damage could be significantly reduced. On the other hand, a detailed HVAC design could implement separation criteria for different fire areas with safety-related equipment, which would result in negligible risks associated with smoke damage even without crediting coating of the Q-DCIS circuit boards.

In summary, the risk associated with postulated smoke propagation is negligible with balanced HVAC and Q-DCIS system designs implemented to address smoke removal issues.

12.6.2 Qualitative Screening for Shutdown Conditions

The guidance in NUREG/CR-6850 is not applicable to qualitative screening for shutdown conditions. Therefore, the screening for shutdown fire model is performed with a criterion that the postulated fire has to result in one of the initiating events as defined in the shutdown model.

The critical safety functions essential to the shutdown model are Decay Heat Removal (DHR) and Inventory Control. Containment is open for much of the analysis, and containment integrity is not relevant to any modeled functions. Reactivity Control and Spent Fuel Pool Cooling are assumed to have no significant impact on the shutdown model. Power availability is modeled for its impact on decay heat removal. Loss of power is evaluated as an initiating event, and power dependencies for systems are included in the model.

A shutdown initiating event is defined as any event that provokes a disturbance in the desired state of the plant and that requires some kind of action to prevent damage to the core. The postulated shutdown initiating events related to internal events, fire and flooding will challenge:

- Decay Heat Removal (includes Loss of RWCU/SDC, Loss of Preferred Power, and Loss of all Service Water), or
- Reactor Coolant System Inventory Control (includes several postulated LOCAs during shutdown).

Fire scenarios during Mode 6-Flooded are not explicitly quantified in the accident sequence analysis. Fires cause loss of RWCU/SDC scenarios, but during Mode 6-Flooded the time to uncover the core is very long. As such, the risk contribution from Mode 6-Flooded fire scenarios is not significant.

Fire-induced IORV is not a shutdown fire initiating event. Line breaks, or a stuck-open relief valve, that occur above RPV level L3 are not initiating events because RWCU/SDC and a natural circulation flow path are available

The fire scenario in the drywell/containment area is screened in the shutdown fire models. A fire in the drywell/containment area is highly unlikely to result in the loss of RWCU/SDC. The RWCU inboard containment isolation valves are located in the lower drywell, which should be well separated spatially. There are minimal combustible fuel loads inside the lower drywell. Since there are multiple openings between the lower drywell and upper drywell, no hot gas layer will form in the lower drywell. The hot gas entering the upper drywell is not going to induce additional damage due to the much larger volume in the upper drywell and the open containment without drywell head for most of shutdown.

A fire in the turbine building fire area F4197 (general areas) could potentially damage the cables providing control and power supply to instrument air compressors. The loss of instrument air would result in the closing of the RWCU containment isolation valves, so this fire scenario is modeled as a shutdown initiating event.

The following is a list of the unscreened fire areas for shutdown fire PRA model:

- F3301 and F3302 (the two nonsafety-related DCIS rooms),
- F1152 and F1162 (the two RWCU/SDC pump rooms),
- F4197 (turbine building general area),
- F4250 and F4260 (the two RCCW rooms),
- F4550 and F4560 (the two chilled water system rooms),
- F5350 and F5360 (the two 6.9kV PIP switchgear rooms),
- FSWYD (the switchyard),
- F9150 and F9160 (the two cable tunnels), and
- F7300A and F7300B (the two plant service water building rooms).

Table 12.6-1

Evaluation of Potential Applicability of Initiating Events in Internal Events

PRA Model to Fire PRA under Full Power Conditions
(Modified NEDO-33201 Table 3.2-1)

Initiating Event	**Designator**	**Event Tree**	**App. to FPRA**	**Basis**
Transients				
General Transient	%T-GEN	T-GEN	X	
Transient with PCS Unavailable	%T-PCS	T-GEN	X	
Loss of Feedwater	%T-FDW	T-FDW	X	
IORV	%T-IORV	T-IORV	X	Design should prevent this sequence, but included for fire propagation cases.
Loss of Preferred Power (LOPP)	%T-LOPP	T-LOPP	X	A fire in the switchyard or certain areas in EB could result in an LOPP.
LOCAs Inside Containment				
Large Steam LOCA	%LL-S	LL-S		Fire cannot induce a pipe break
Large Steam LOCA in FW Line A	%LL-S-FDWA	LL-S-FDWA		Fire cannot induce a pipe break
Large Steam LOCA in FW Line B	%LL-S-FDWB	LL-S-FDWB		Fire cannot induce a pipe break
Medium Liquid LOCA (no RWCU break)	%ML-L	ML-L		Fire cannot induce a pipe break
Medium/Small Steam LOCA	%SL-S	SL-S		Fire cannot induce a pipe break
Small Liquid LOCA	%SL-L	SL-L		Fire cannot induce a pipe break
Vessel Rupture	%RVR	RVR		Fire cannot induce a vessel rupture
LOCAs Outside Containment				
Main Steam Line	%BOC-MS	BOC-MS		Fire cannot induce a pipe break
Feedwater Line A	%BOC-FDWA	BOC-FDWA		Fire cannot induce a pipe break

Table 12.6-1

Evaluation of Potential Applicability of Initiating Events in Internal Events

PRA Model to Fire PRA under Full Power Conditions
(Modified NEDO-33201 Table 3.2-1)

Initiating Event	**Designator**	**Event Tree**	**App. to FPRA**	**Basis**
Feedwater Line B	%BOC-FDWB	BOC-FDWB		Fire cannot induce a pipe break
RWCU Line	%BOC-RWCU	BOC-RWCU		Fire cannot induce a pipe break
IC Line	%BOC-IC	BOC-IC		Fire cannot induce a pipe break
ISLOCA	%ISLOCA	BOC-RWCU		Fire could potentially impact multiple MOVs in series and result in an ISLOCA. However, the ESBWR design prevents the fire-induced ISLOCA sequences.
Special Initiators				
Complete Loss of PSWS	%T-SW	T-SW	X	
Complete Loss of Air Systems	%T-IA	T-GEN	X	

Table 12.6-2

Qualitative Screening Results for Full-Power Conditions

Fire Area	Description	Induce Rx Trip	Affect PRA Components	Qualitatively Screened
F1104	Elevator A			x
F1105	Elevator C			x
F1110	HCU A	x	x	
F1120	HCU C	x	x	
F1130	HCU B	x	x	
F1140	HCU D	x	x	
F1150	Nonsafety NW quadrant	x	x	
F1152	Nonsafety NE quadrant	x	x	
F1160	Nonsafety SW quadrant	x	x	
F1162	Nonsafety SE quadrant	x	x	
F1170	Drywell and Containment	x	x	x
F1190	Stairwell A			x
F1191	Stairwell B			x
F1192	Stairwell C			x
F1193	Stairwell D			x
F1194	Elevator B			x
F1195	Interior Stairwell A			x
F1196	Interior Stairwell B			x
F1197	Interior Stairwell C			x
F1198	Interior Stairwell D			x
F1203	CRD and Containment Access	x	x	
F1210	Division 1 Battery		x	
F1220	Division 2 Battery		x	
F1230	Division 3 Battery		x	
F1240	Division 4 Battery		x	
F1262	B Demineralizers		x	
F1311	Division 1 Electrical		x	
F1321	Division 2 Electrical		x	
F1331	Division 3 Electrical		x	
F1341	Division 4 Electrical		x	
F1450	Hydrogen Gas A			x
F1460	Hydrogen Gas B			x
F1600	Refueling Floor and Common Access	x	x	
F1770	Main Steam Tunnel	x	x	
F19101	Electric Motor Driven G21 Pump		x	
F19150	Primary Electric Motor Driven Fire Pump		x	

Table 12.6-2

Qualitative Screening Results for Full-Power Conditions

Fire Area	Description	Induce Rx Trip	Affect PRA Components	Qualitatively Screened
F19160	Primary Diesel Driven Fire Pump		x	
F19161	Primary Diesel Fire Pump Fuel Oil Storage Tank		x	
F2100	New and Spent Fuel Handling		x	
F2192	Elevator A			x
F2193	Stairwell A			x
F2490	Stairwell B			x
F2600	HVAC Penthouse A			x
F2601	HVAC Penthouse B			x
F3100	Corridor A			x
F3101	Corridor B			x
F3110	Division 1 Electrical		x	
F3120	Division 2 Electrical		x	
F3130	Division 3 Electrical		x	
F3140	Division 4 Electrical		x	
F3150	DPS Control Room	x	x	
F3190	Stairwell A			x
F3191	Elevator A			x
F3192	Stairwell B			x
F3270	Main Control Room Complex	x	x	
F3301	Nonsafety-Related Electrical Train A	x	x	
F3302	Nonsafety-Related Electrical Train B	x	x	
F39151	Ancilliary Diesel Generator A/Fuel Oil Storage		x	
F39161	Ancilliary Diesel Generator B/Fuel Oil Storage		x	
F39252	Ancilliary Generator A		x	
F39253	ADG Electrical & Control Equipment Room B		x	
F39262	Ancilliary Diesel Generator B		x	
F39263	ADG Electrical & Control Equipment room A		x	
F4190	Elevator (Freight)			x
F4191	Stairwell A			x
F4192	Elevator (Personal)			x
F4193	Stairwell B			x
F4194	Stairwell C			x

Table 12.6-2

Qualitative Screening Results for Full-Power Conditions

Fire Area	Description	Induce Rx Trip	Affect PRA Components	Qualitatively Screened
F4195	Stairwell D			x
F4196	Charcoal Adsorbers			x
F4197	Turbine Equipment	x	x	
F4201	Lube Oil Storage			x
F4202	Hydrogen Storage			x
F4250	Reactor Component Cooling Water A		x	
F4260	Reactor Component Cooling Water B		x	
F4271	Phase A Main Transformer	x		
F4272	Phase B Main Transformer	x		
F4273	Phase C Main Transformer	x		
F4274	Spare Main Transformer			x
F4302	Instrument Air / Service Air Train A		x	
F4303	Instrument Air / Service Air Train B		x	
F4403	Turbine Lube Oil	x	x	
F4550	Chilled Water A		x	
F4560	Chilled Water B		x	
F4650	Water Surge Tanks A (CWS & RCCWS)			x
F4660	Water Surge Tanks B (CWS & RCCWS)			x
F5100	Corridors		x	
F5104	Fire Protection Equipment			x
F5151	Batteries A	x	x	
F5153	Diesel Generator A		x	
F5154	Cable Chase Train A	x	x	
F5157	Reserve Auxiliary Transformer A		x	
F5158	Unit Auxiliary Transformer A	x	x	
F5159	Fuel Oil Storage A			x
F5161	Batteries B	x	x	
F5163	Diesel Generator B		x	
F5164	Cable Chase Train B	x	x	
F5167	Reserve Auxiliary Transformer B		x	
F5168	Unit Auxiliary Transformer B	x	x	
F5169	Fuel Oil Storage B			x

Table 12.6-2

Qualitative Screening Results for Full-Power Conditions

Fire Area	Description	Induce Rx Trip	Affect PRA Components	Qualitatively Screened
F5180	Technical Support Center Complex			x
F5190	Elevator (Freight)			x
F5191	Elevator (Personnel)			x
F5192	Stairwell A			x
F5193	Stairwell B			x
F5194	Stairwell C			x
F5201	Switchgear, Lower Cable & Battery Charger I	x	x	
F5202	Battery C		x	
F5203	LC & Battery Charger III		x	
F5204	Switchgear, Lower Cable & Battery Charger II	x	x	
F5205	Electronic Equipment		x	
F5250	Day Tank A		x	
F5251	Diesel Generator Electrical & Control Equipment Room A		x	
F5260	Day Tank B		x	
F5261	Diesel Generator Electrical & Control Equipment Room B		x	
F5350	Electrical Equipment A		x	
F5360	Electrical Equipment B		x	
F5450	HVAC TSC & EER Equipment A			x
F5460	HVAC TSC & EER Equipment B			x
F6101	Radwaste Handling Equipment			x
F6102	Electrical Equipment			x
F6190	Elevator			x
F6191	Stairwell A			x
F6192	Stairwell B			x
F6193	Stairwell C			x
F6194	Stairwell D			x
F6270	Radwaste Control Room Complex			x
F6290	Stairwell E			x
F6301	HVAC Equipment			x
F7100	Pump House	x	x	
F7150	Secondary Nonseismic Diesel Fire Pump			x

Table 12.6-2

Qualitative Screening Results for Full-Power Conditions

Fire Area	Description	Induce Rx Trip	Affect PRA Components	Qualitatively Screened
F7160	Secondary Nonseismic Motor-driven Fire Pump			x
F7180	Guard House			x
F7200	Hot Machine Shop & Storage			x
F7300A	Service Water / Water Treatment Building Train A		x	
F7300B	Service Water / Water Treatment Building Train B		x	
F7400	Cold Machine Shop			x
F7500	Warehouse			x
F7600	Training Center			x
F7700	Service Building			x
F7800	Auxiliary Boiler Building			x
F7900	Administration Building			x
F9101	Uncontrolled Access			x
F9150	Cable Tunnel A		x	
F9160	Cable Tunnel B		x	
F9190	Controlled Access			x
F9201	Controlled Access			x
FSWYD	Switchyard (assumed)	x		

Note: Fire area F1170 is qualitatively screened since the primary containment for ESBWR is inerted during at-power operations. A sensitivity case for this fire area during other modes is performed in Section 11 for full-power fire sensitivity study.

Table 12.6-3
Evaluation of Potential Applicability of Initiating Events in Internal Events PRA Model to Fire PRA under Shutdown Conditions

Shutdown Initiators	Description	Applicable Fire Scenarios
%M5-G31	LOSS OF RWCU/SDC MODE 5	F4197 and Fire propagation cases (F3301 & F3302, F1152 & F1162, F4250 & F4260, F4550 & F4560, F5350 & F5360)
%M5-LOCA-FW	LOCA - FEEDWATER - MODE 5	N/A since a fire would not induce LOCA
%M5-LOCA-G	LOCA - GDCS - MODE 5	N/A since a fire would not induce LOCA
%M5-LOCA-I	LOCA - INSTRUMENT LINE BELOW TAF MODE 5	N/A since a fire would not induce LOCA
%M5-LOCA-OT	LOCA - OTHER THAN FW OR GDCS - MODE 5	N/A since a fire would not induce LOCA
%M5-LOCA-RW	LOCA - RWCU BELOW TAF	N/A since a fire would not induce LOCA
%M5-LOPP	LOSS OF PREF POWER - MODE 5	FSWYD, and Fire propagation case F9150 & F9160
%M5_LPSWS	LOSS OF SERVICE WATER MODE 5	F7300A and F7300B
%M5_RPV_LEAK	RPV LEAK - MODE 5	N/A since a fire would not induce RPV leakage
%M5-RWCU-BOC	RWCU BREAK OUTSIDE CONTAINMENT - MODE 5	N/A since a fire would not induce BOC
%M5O_G31	LOSS OF RWCU/SDC - MODE 5 OPEN	F4197 and Fire propagation cases (F3301 & F3302, F1152 & F1162, F4250 & F4260, F4550 & F4560, F5350 & F5360)
%M5O_LOCA-FW	LOCA IN FEEDWATER LINE - MODE 5 OPEN	N/A since a fire would not induce LOCA
%M5O_LOCA-G	GDCS LOCA - MODE 5 OPEN	N/A since a fire would not induce LOCA
%M5O_LOCA_I	LOCA - INSTRUMENT LINE BLEOW TAF - MODE 5 OPEN	N/A since a fire would not induce LOCA
%M5O_LOCA-OT	LOCA OTHER THAN FW OR GDCS - MODE 5 OPEN	N/A since a fire would not induce LOCA

Table 12.6-3
Evaluation of Potential Applicability of Initiating Events in Internal Events PRA Model to Fire PRA under Shutdown Conditions

Shutdown Initiators	Description	Applicable Fire Scenarios
%M5O_LOCA_R	LOCA - RWCU LOCA BELOW TAF - MODE 5 OPEN	N/A since a fire would not induce LOCA
%M5O_LOPP	LOSS OF PREF POWER - MODE 5 OPEN	FSWYD, and Fire propagation case F9150 & F9160
%M5O_LPSWS	LOSS OF SERVICE WATER - MODE 5 OPEN	F7300A and F7300B
%M5O_RPVLEAK	RPV LEAK - MODE 5 OPEN	N/A since a fire would not induce RPV leakage
%M5O_RWCUBOC	LOCA - RWCU BREAK OUTSIDE CONTAINMENT - M5 OPEN	N/A since a fire would not induce BOC
%M6F_LOCA_I	INSTRUMENT LINE LOCA IN MODE 6 FLOODED	N/A since a fire would not induce LOCA
%M6F_LOCA_R	RWCU LOCA IN MODE 6 FLOODED	N/A since a fire would not induce LOCA
%M6F_RPVLEAK	RPV LEAK - MODE 6 FLOODED	N/A since a fire would not induce RPV leakage
%M6F_RWBOC	RWCU BREAK OUTSIDE CONTAINMENT - MODE 6 FLOODED	N/A since a fire would not induce BOC
%M6U_G31	LOSS OF RWCU - MODE 6 UNFLOODED	F4197 and Fire propagation cases (F3301 & F3302, F1152 & F1162, F4250 & F4260, F4550 & F4560, F5350 & F5360)
%M6U_LOCA-FW	LOCA IN FEEDWATER LINE - MODE 6 UNFLOODED	N/A since a fire would not induce LOCA
%M6U_LOCA-G	GDCS LOCA - MODE 6 UNFLOODED	N/A since a fire would not induce LOCA
%M6U_LOCA-I	INSTRUMENT LINE LOCA - MODE 6 UNFLOODED	N/A since a fire would not induce LOCA
%M6U_LOCA-OT	LOCA OTHER THAN FW OR GDCS - MODE 6 UNFLOODED	N/A since a fire would not induce LOCA
%M6U_LOCA-RW	RWCU LOCA - MODE 6 UNFLOODED	N/A since a fire would not induce LOCA
%M6U_LOPP	LOSS OF PREF POWER - MODE 6 UNFLOODED	FSWYD, and Fire propagation case F9150 & F9160
%M6U_LPSWS	LOSS OF SERVICE WATER - MODE 6 UNFLOODED	F7300A and F7300B

Table 12.6-3
Evaluation of Potential Applicability of Initiating Events in Internal Events PRA Model to Fire PRA under Shutdown Conditions

Shutdown Initiators	Description	Applicable Fire Scenarios
%M6U_RPVLK	RPV LEAK - MODE 6 UNFLOODED	N/A since a fire would not induce RPV leakage
%M6U_RW_BC	LOCA - RWCU OUTSIDE CONTAINMENT - MODE 6 UNFLOODED	N/A since a fire would not induce BOC

12.7 CALCULATION OF THE FIRE IGNITION FREQUENCY

Section 12.7.1 documents the fire ignition frequency calculations for at-power operation. Section 12.7.2 documents the fire ignition frequency calculations for shutdown conditions.

12.7.1 Calculation of the Full Power Fire Ignition Frequency

This section documents the calculations of the fire ignition frequency during at-power operations for each of the unscreened fire areas of this analysis. The NUREG/CR-6850 (Reference 12-1) methodology is used to calculate the full power fire ignition frequencies.

This task is organized around the following eight steps:

- Step 1: Mapping plant ignition sources to generic sources,
- Step 2: Plant fire event data collection and review,
- Step 3: Plant specific updates of generic ignition frequencies,
- Step 4: Mapping plant-specific locations to generic locations,
- Step 5: Location weighting factors,
- Step 6: Fixed fire ignition source counts,
- Step 7: Ignition source weighting factors, and
- Step 8: Ignition source and compartment fire frequency evaluation.

Steps 2 and 3 are not applicable since the ESBWR plant is in design phase. The location weighting factors are simplified as described in assumptions.

Tables 12.7-1 and 12.7-2 list all the fire ignition source bins and the plant locations. The template shown in Table 12.7-3 is used to list fire ignition sources. All 37 bins listed in NUREG/CR-6850 are included with their applicability evaluated according to the plant location. Per NUREG/CR-6850 guidance, the sources in plant location are counted as follows:

- For bins 01, 08, 09, 10, 14, 17, 21, 23a, 23b, 26, 27, 28, 29, 32, 33, 34, and 35, the equipment counts are obtained from the system model database using queries for specific fire areas and component types.
- For bins 02, 03, 20, and 22, no data is collected since they are not applicable to ESBWR plant design. For the main control room, a postulated fire would not result in spurious actuations. The control cabinets are located in the Q-DCIS and N-DCIS rooms. Therefore, the ESBWR MCR is significantly different from a traditional plant design.
- For bins 06, 07, 24, 25, 36, and 37, the transient fires caused by welding and cutting or generic transient fires are estimated to be equal for all fire areas. Since the more risk significant areas will have more restrictive access for maintenance activities, this approach is considered conservative. For the MCR (F3270) fire scenario, the elevated maintenance/occupancy rating for bin 07 is used. For the turbine building general area (F4197) fire scenario, the elevated maintenance/occupancy ratings for bin 36 and 37 are used.

- For bins 05, 11, and 31, the maintenance-influencing factors are assumed to be the same. Therefore, only the numbers of cable runs in those areas are counted for the weighting factor calculations. The total sources are summed up for the three plant locations (CAR, TB and XX).
- For bin 12 and 18, the cable runs are counted for those areas. The total sources are counted for all plant locations. Junction boxes are assumed to be proportional to cable loading.
- For bin 15, the cabinet numbers are estimated based on a spreadsheet from the responsible design engineer and applicable counts of PRA equipment. The total bin 15 count will be significantly higher when non-PRA equipment is included so the ignition frequencies are conservative.
- For bin 16, the switchgears that have voltage higher than or equal to 480VAC are counted.

The calculation of weighting factors for certain fire ignition sources requires an estimate of the total number of plant fire areas. A total number of 148 plant fire areas are divided into the three categories as follows:

- CAR (Control/Auxiliary/Reactor Building): 53 fire areas
- TB (Turbine Building): 17 fire areas
- XX (plant-wide location): 78 fire areas

The calculation of fire ignition frequencies for the unscreened fire areas is included in Appendix 12A of this section. A summary of all calculated fire area ignition frequencies is included in Table 12.7-4.

It is evident that the calculation of the fire ignition frequencies is conservative with a total fire ignition frequency of 2.23E-1 out of 2.99E-1 for all bins in a typical nuclear power plant (Table 12.7-1) accounted in only the unscreened fire areas. Eventually, equipment from all plant areas will be used for the fire ignition frequency calculations, which will significantly reduce the ignition frequencies for the unscreened fire areas. To evaluate the uncertainties in the design inputs that are used for fire ignition source counts, sensitivity studies are performed on the fire ignition frequencies, which are documented in Section 11.

12.7.2 Calculation of the Shutdown Fire Ignition Frequency

This section documents the fire ignition frequency calculations for shutdown conditions.

The scope in NUREG/CR-6850 excludes low power/shutdown operations, spent fuel pool accidents, sabotage, and PRA Level 3 estimates of consequence. Therefore, the shutdown fire ignition frequencies are calculated with a different method.

The estimation of fire ignition frequencies in shutdown conditions is performed using the information provided in the document RES/OERAB/S02-01 “Fire Events – Update of U.S. Operating Experience”, 1986 – 1999, (Ref. 12-2). This document expands and updates the information of AEOD/S97-03 “Special Study, Fire Events – Feedback of U.S. Operating Experience”, June 1997, (Ref. 12-3). Reference 12-2 summarizes information on fire events that occurred during power operation and during shutdown conditions, and provides estimation of

fire frequencies both in power and shutdown operation for different types of buildings and locations.

Table ES-2 "Shutdown Fire Frequencies by Plant Location", Ref. 12-2, summarizes estimated fire frequencies for different plant locations on the basis of the reports gathered from different sources of information described in the report. The Reference 12-2 shutdown fire ignition frequencies are summarized here in Table 12.7-5. The frequencies shown in Table 12.7-5 are per year of shutdown operation.

The definition of buildings in Reference 12-2, as shown in Table 12.7-5, does not correspond identically to the definition of buildings of the ESBWR plant. Therefore, it is necessary to map the Reference 12-2 shutdown fire ignition frequencies to the ESBWR buildings. Per Table 12.6-3 and Subsection 12.6.2, only a small number of fire areas are not screened from the shutdown fire PRA analysis. The fire ignition frequencies for these fire areas with the corresponding plant locations in Table 12.7-5 are calculated in Table 12.7-6. A total of shutdown fire ignition frequency of 9.26E-1/shutdown-year (out of a total of 1.41/shutdown-year in Table 12.7-5) has been accounted in these fire areas with the conservative assumptions. That is, about two thirds of all shutdown frequencies listed in Table 12.7-5 are accounted for 15 unscreened fire areas (about 10% of all fire areas) under the shutdown conditions, which is conservative.

In order to compare the shutdown fire risk with the full-power fire risk, the shutdown fire initiating event frequencies are converted from per shutdown year to per calendar year. The conversion factors for each mode are calculated in Table 12.7-7 by assuming a two-year refueling cycle and an outage duration of 548 hours. Therefore, one half shutdown per year (274 hours) is assumed for the shutdown fire initiating event frequency calculations.

Per Subsections 12.4.2 and 12.6.2, a number of shutdown fire initiating events are postulated. The resulting fire ignition frequencies per shutdown operating mode used in this risk analysis are summarized in Table 12.7-8.

Table 12.7-1
Ignition Source Type Bins from NUREG/CR-6850 Table 6-1

Bin#	Ignition Source Type Bin	Generic Frequency	Location
1	Batteries	7.50E-04	BR
2	Reactor Coolant Pump	6.10E-03	COP
3	Transients and Hotwork	2.00E-03	COP
4	Main Control Board	2.50E-03	CR
5	Cable Fires caused by welding and cutting (Cntrl/Aux/Rx Building)	1.60E-03	CAR
6	Transient fires caused by welding and cutting (Cntrl/Aux/Rx Building)	9.70E-03	CAR
7	Transients (Cntrl/Aux/Rx Building)	3.90E-03	CAR
8	Diesel Generators	2.10E-02	DGR
9	Air Compressors	2.40E-03	XX
10	Battery Chargers	1.80E-03	XX
11	Cable Fires caused by welding and cutting (Plant-Wide)	2.00E-03	XX
12	Cable Run	4.40E-03	XX
13	Dryers	2.60E-03	XX
14	Electric Motors	4.60E-03	XX
15	Electrical Cabinets	4.50E-02	XX
16	High Energy Arcing Faults	1.50E-03	XX
17	Hydrogen Tanks	1.70E-03	XX
18	Junction Boxes	1.90E-03	XX
19	Misc. Hydrogen Fires	2.50E-03	XX
20	Off-gas/H2 Recombiner (BWR)	4.40E-02	XX
21	Pumps	2.10E-02	XX
22	RPS MG Sets	1.60E-03	XX
23a	Transformers (oil filled)	9.90E-03	XX
23b	Transformers (dry)	9.90E-03	XX
24	Transient fires caused by welding and cutting (Plant-Wide)	4.90E-03	XX
25	Transients (Plant-Wide)	9.90E-03	XX
26	Ventilation Subsystems	7.40E-03	XX
27	Transformer - Catastrophic	6.00E-03	TY
28	Transformer - Non Catastrophic	1.20E-02	TY
29	Yard Transformers (others)	2.20E-03	TY
30	Boiler	1.10E-03	TB
31	Cable Fires caused by welding and cutting (Turbine Building)	1.60E-03	TB
32	Main Feedwater Pumps	1.30E-02	TB
33	Turbine Generator Excitor	3.90E-03	TB
34	Turbine Generator Hydrogen	6.50E-03	TB
35	Turbine Generator Oil	9.50E-03	TB

Table 12.7-1

Ignition Source Type Bins from NUREG/CR-6850 Table 6-1

Bin#	Ignition Source Type Bin	Generic Frequency	Location
36	Transient fires caused by welding and cutting (Turbine Building)	8.20E-03	TB
37	Transients (Turbine Building)	8.50E-03	TB
	Total	2.99E-1	

Table 12.7-2

Plant Locations and Location Weighting Factors

L	Plant Location	W_L	Description	Basis
BR	Battery Room	1	Plant location(s) where station batteries are located. Does not include other permanent or temporary batteries.	The number of site units that share a common set of batteries.
CAR	Control/Auxiliary/Reactor Building	1	The combination of typically contiguous buildings that contain the emergency core cooling, auxiliary feedwater, emergency electrical distribution system, emergency control circuits, and other safe shutdown related systems. It would include the cable spreading room, emergency or safety related switchgear room, relay room, etc. It would not specifically include the containment where main reactor vessel is located and the fuel handling areas of the plant. Note: in BWRs, this location combination is typically referred to as the Reactor Building.	The number of units in the site divided by the number of shared control / auxiliary / reactor buildings considered as one structure.
COP	Containment (PWR)	0	PWR–The building that houses the reactor core and the rest of the primary system. Refueling floor may be part of this location in many U.S. plants.	The number of units in the site divided by the number of containment buildings.
CR	Control Room	1	Plant location(s) where controls for normal and emergency plant operations are located. The control room envelope may include additional locations typically referred to as: • Auxiliary Electrical Room or Relay Room, where all plant relay logic circuits	The number of units in the site divided by the number of control rooms per site.

Table 12.7-2

Plant Locations and Location Weighting Factors

L	Plant Location	W_L	Description	Basis
DGR	Diesel Generator Rooms	1	Plant location where emergency diesel generators are located. This does not include temporary diesel generators.	The number of units in the site that share a common set of diesel generators.
TB	Turbine Building	1	Plant building that house turbine-generators, its auxiliary systems, and power conversion systems, such as main feedwater, condensate and other systems. Building generally consists of several elevations, including, basement, mezzanine, and turbine deck.	The number of units in the site divided by the number of turbine buildings.
TY	Transformer Yard	1	The area of the yard where station, service, and auxiliary transformers and related items are located. This may also be referred to as the Switchyard.	The number of units in the site that share a common set of switchyards.
XX	Plant-Wide	1	All plant locations inside the fence other than the containment, fuel handling building, office buildings, maintenance yard, maintenance shop, etc.	The number of units per site.

Table 12.7-3

Template for Fire Compartment Ignition Source Data Sheet (ISDS)

Compartment Ignition Sources (FIF)		**Plant Location**	**Weighting Factor**	**Sources in Compartment**	**Sources in Plant Location**
Bin #	Ignition Source	L	WFL	(A)	(B)
1	Batteries	BR	1		21
2	Reactor Coolant Pump	COP	0		0
3	Transients and Hotwork	COP	0		0
4	Main Control Board	CR	0		0
5	Cable Fires caused by welding and cutting (Cntrl/Aux/Rx Building)	CAR	1		1166
6	Transient fires caused by welding and cutting (Cntrl/Aux/Rx Building)	CAR	1		53
7	Transients (Cntrl/Aux/Rx Building)	CAR	1		53
8	Diesel Generators	DGR	1		4
9	Air Compressors	XX	1		4
10	Battery Chargers	XX	1		15
11	Cable Fires caused by welding and cutting (Plant-Wide)	XX	1		430
12	Cable Run	XX	1		1820
13	Dryers	XX	1		2
14	Electric Motors	XX	1		8

Table 12.7-3

Template for Fire Compartment Ignition Source Data Sheet (ISDS)

Compartment Ignition Sources (FIF)		Plant Location	Weighting Factor	Sources in Compartment	Sources in Plant Location
Bin #	Ignition Source	L	WFL	(A)	(B)
15	Electrical Cabinets	XX	1		530
16	High Energy Arcing Faults	XX	1		77
17	Hydrogen Tanks	XX	1		2
18	Junction Boxes	XX	1		1820
19	Misc. Hydrogen Fires	XX	1		0
20	Off-gas/H2 Recombiner (BWR)	XX	1		2
21	Pumps	XX	1		43
22	RPS MG Sets	XX	0		0
23a	Transformers (oil filled)	XX	1		0
23b	Transformers (dry)	XX	1		67
24	Transient fires caused by welding and cutting (Plant-Wide)	XX	1		78
25	Transients (Plant-Wide)	XX	1		78
26	Ventilation Subsystems	XX	1		26
27	Transformer - Catastrophic	TY	1		9
28	Transformer - Non Catastrophic	TY	1		8
29	Yard Transformers (others)	TY	1		1
30	Boiler	TB	1		2
31	Cable Fires caused by welding and cutting (Turbine Building)	TB	1		224
32	Main Feedwater Pumps	TB	1		8

Table 12.7-3

Template for Fire Compartment Ignition Source Data Sheet (ISDS)

Compartment Ignition Sources (FIF)		Plant Location	Weighting Factor	Sources in Compartment	Sources in Plant Location
Bin #	Ignition Source	L	WFL	(A)	(B)
33	Turbine Generator Excitor	TB	1		1
34	Turbine Generator Hydrogen	TB	1		1
35	Turbine Generator Oil	TB	1		1
36	Transient fires caused by welding and cutting (Turbine Building)	TB	1		17
37	Transients (Turbine Building)	TB	1		17

Notes:
(A) Number of Ignition Sources in Compartment
(B) Total Number of Ignition Sources in Selected Plant Location or in Plant for Plant-Wide Components
Ignition Source Frequency: FIF = WFL*WFIS*FF
Compartment Fire Frequency: FL = SUM(FIF)

Table 12.7-4

Summary of Fire Ignition Frequencies for Unscreened Fire Areas

Fire Area	Compartment Description	Fire Ignition Freq (/yr)
F1110	HCU A	3.56E-04
F1120	HCU C	3.80E-04
F1130	HCU B	2.57E-04
F1140	HCU D	2.57E-04
F1150	Nonsafety NW quadrant	3.12E-03
F1152	Nonsafety NE quadrant	4.10E-03
F1160	Nonsafety SW quadrant	2.55E-03
F1162	Nonsafety SE quadrant	3.77E-03
F1170	Drywell and Containment	3.34E-04
F1203	CRD and Containment Access	2.34E-03
F1210	Division 1 Battery	5.18E-04
F1220	Division 2 Battery	6.05E-04
F1230	Division 3 Battery	4.07E-04
F1240	Division 4 Battery	4.07E-04
F1262	B Demineralizers	2.66E-04
F1311	Division 1 Electrical	2.58E-03
F1321	Division 2 Electrical	2.49E-03
F1331	Division 3 Electrical	2.60E-03
F1341	Division 4 Electrical	2.67E-03
F1600	Refueling Floor and Common Access	4.26E-04
F1770	Main Steam Tunnel	2.95E-04
F19101	Electric Motor Driven G21 Pump	6.86E-04
F19150	Primary Electric Motor Driven Fire Pump	1.20E-03
F19160	Primary Diesel Driven Fire Pump	1.17E-03
F19161	Primary Diesel Fire Pump Fuel Oil Storage Tank	1.90E-04
F2100	New and Spent Fuel Handling	2.22E-03
F3110	Division 1 Electrical	1.36E-03
F3120	Division 2 Electrical	1.27E-03
F3130	Division 3 Electrical	1.27E-03
F3140	Division 4 Electrical	1.27E-03
F3150	DPS Control Room	3.29E-04
F3270	Main Control Room Complex	2.59E-03
F3301	Nonsafety-Related Electrical Train A	4.42E-03
F3302	Nonsafety-Related Electrical Train B	5.19E-03
F39151	Ancilliary Diesel Generator A/Fuel Oil Storage	6.78E-04

Table 12.7-4

Summary of Fire Ignition Frequencies for Unscreened Fire Areas

Fire Area	Compartment Description	Fire Ignition Freq (/yr)
F39161	Ancilliary Diesel Generator B/Fuel Oil Storage	6.78E-04
F39252	Ancilliary Generator A	5.45E-03
F39253	ADG Electrical & Control Equipment Room B	4.64E-04
F39262	Ancilliary Diesel Generator B	5.44E-03
F39263	ADG Electrical & Control Equipment room A	4.64E-04
F4197	Turbine Equipment	4.59E-02
F4250	Reactor Component Cooling Water A	3.08E-03
F4260	Reactor Component Cooling Water B	3.17E-03
F4271	Phase A Main Transformer	2.36E-03
F4272	Phase B Main Transformer	2.36E-03
F4273	Phase C Main Transformer	2.36E-03
F4302	Instrument Air / Service Air Train A	2.26E-03
F4303	Instrument Air / Service Air Train B	2.26E-03
F4403	Turbine Lube Oil	1.06E-02
F4550	Chilled Water A	1.07E-03
F4560	Chilled Water B	1.15E-03
F5100	Corridors	2.30E-04
F5151	Batteries A	5.52E-04
F5153	Diesel Generator A	8.70E-03
F5154	Cable Chase Train A	3.28E-04
F5157	Reserve Auxiliary Transformer A	2.36E-03
F5158	Unit Auxiliary Transformer A	2.36E-03
F5161	Batteries B	5.52E-04
F5163	Diesel Generator B	8.70E-03
F5164	Cable Chase Train B	3.44E-04
F5167	Reserve Auxiliary Transformer B	2.36E-03
F5168	Unit Auxiliary Transformer B	2.36E-03
F5201	Switchgear, Lower Cable & Battery Charger I	9.04E-04
F5202	Battery C	2.25E-04
F5203	LC & Battery Charger III	2.26E-03
F5204	Switchgear, Lower Cable & Battery Charger II	9.04E-04
F5205	Electronic Equipment	2.63E-04
F5250	Day Tank A	1.90E-04
F5251	Diesel Generator Electrical & Control Equipment Room A	2.75E-04
F5260	Day Tank B	1.90E-04
F5261	Diesel Generator Electrical & Control Equipment Room B	2.75E-04

Table 12.7-4

Summary of Fire Ignition Frequencies for Unscreened Fire Areas

Fire Area	Compartment Description	Fire Ignition Freq (/yr)
F5350	Electrical Equipment A	6.63E-03
F5360	Electrical Equipment B	6.54E-03
F7100	Pump House	5.08E-03
F7300A	Service Water / Water Treatment Building Train A	3.57E-03
F7300B	Service Water / Water Treatment Building Train B	3.48E-03
F9150	Cable Tunnel A	1.04E-03
F9160	Cable Tunnel B	1.17E-03
FSWYD	Switchyard (assumed)	1.80E-02
Total		**2.23E-01**

Table 12.7-5

Shutdown Fire Frequencies By Plant Location

Plant Location	Shutdown Fire Frequencies (/Shutdown-Year)		
	5%	Mean	95%
Containment	8.93E-04	2.30E-01	8.70E-01
Reactor building	1.30E-03	3.30E-01	1.30E+00
Auxiliary building	1.10E-03	2.80E-01	1.10E+00
Turbine building	1.40E-03	3.60E-01	1.40E+00
Control room	8.90E-05	2.80E-02	8.70E-02
Cable spreading room	1.30E-05	3.20E-03	1.20E-02
Switchgear room	2.00E-04	5.20E-02	2.00E-01
EDG building	2.40E-04	6.20E-02	2.40E-01
SWS pumphouse	5.10E-05	1.30E-02	5.00E-02
Switchyard	2.00E-04	5.20E-02	2.00E-01
Battery room	1.30E-05	3.20E-03	1.20E-02

Note:
This table is reproduced here from Table ES-2 “Shutdown Fire Frequencies by Plant Location”, Reference 12-2.

Table 12.7-6

Shutdown Fire Frequencies By Fire Area

Fire Area	First Corresponding Plant Location	Assumed Fraction at 1st Plant Location	SD Fire Frequency at 1st Location	Second Corresponding Plant Location	Assumed Fraction at 2nd Plant Location	SD Fire Freq at 2nd Plant Location	Shutdown Fire Freq (/SD-year)
F1152	Reactor building	25.0%	3.30E-01	Battery room	12.5%	3.20E-03	8.29E-02
F1162	Reactor building	25.0%	3.30E-01	Battery room	12.5%	3.20E-03	8.29E-02
F3301	Auxiliary building	50.0%	2.80E-01				1.40E-01
F3302	Auxiliary building	50.0%	2.80E-01				1.40E-01
F4197	Turbine building	50.0%	3.60E-01				1.80E-01
F4250	Turbine building	12.5%	3.60E-01				4.50E-02
F4260	Turbine building	12.5%	3.60E-01				4.50E-02
F4550	Turbine building	12.5%	3.60E-01				4.50E-02
F4560	Turbine building	12.5%	3.60E-01				4.50E-02
F5350	Switchgear room	50.0%	5.20E-02				2.60E-02
F5360	Switchgear room	50.0%	5.20E-02				2.60E-02
F7300A	SWS pumphouse	50.0%	1.30E-02				6.50E-03
F7300B	SWS pumphouse	50.0%	1.30E-02				6.50E-03
F9150	Cable spreading room	50.0%	3.20E-03				1.60E-03
F9160	Cable spreading room	50.0%	3.20E-03				1.60E-03
FSWYD	Switchyard	100.0%	5.20E-02				5.20E-02
						Total	**9.26E-01**

Table 12.7-7

Operating Mode Durations

Description	**Duration (Hrs)**	**Fraction per outage**	**Fraction per calendar year (Note 1)**
Mode 4	8	0.0146	4.566E-04
Mode 5	192	0.3504	1.096E-02
Mode 5-Open	48	0.0876	2.740E-03
Mode 6-Unflooded	60	0.1095	3.425E-03
Mode 6-Flooded	240	0.4380	1.370E-02
Total	548	1.00	3.128E-02

Note:

1. A two-year refueling cycle is assumed for the ESBWR plants.

Table 12.7-8

Shutdown Fire Ignition Frequencies Per Operating Mode

Shutdown Fire Initiator	Exposing Area	Exposed Area	Exposing Area Fire Frequency	Fire Barrier Failure Probability	Frequency (/SD-Year)	Conversion Factor	Frequency (/Year)	Description	Corresponding Internal Events Shutdown Initiator
%F1152_F1162_M5	F1152	F1162	8.29E-02	7.40E-03	6.13E-04	1.096E-02	6.72E-06	Loss of RWCU/SDC due to fire propagation between F1152 and F1162 - mode 5	%M5_G31
%F1152_F1162_M5O	F1152	F1162	8.29E-02	7.40E-03	6.13E-04	2.740E-03	1.68E-06	Loss of RWCU/SDC due to fire propagation between F1152 and F1162 - mode 5O	%M5O_G31
%F1152_F1162_M6U	F1152	F1162	8.29E-02	7.40E-03	6.13E-04	3.425E-03	2.10E-06	Loss of RWCU/SDC due to fire propagation between F1152 and F1162 - mode 6U	%M6U_G31
%F3301_F3302_M5	F3301	F3302	1.40E-01	1.10E-04	1.54E-05	1.096E-02	1.69E-07	Loss of RWCU/SDC due to fire propagation between F3301 and F3302 - mode 5	%M5_G31
%F3301_F3302_M5O	F3301	F3302	1.40E-01	1.10E-04	1.54E-05	2.740E-03	4.22E-08	Loss of RWCU/SDC due to fire propagation between F3301 and F3302 - mode 5O	%M5O_G31
%F3301_F3302_M6U	F3301	F3302	1.40E-01	1.10E-04	1.54E-05	3.425E-03	5.27E-08	Loss of RWCU/SDC due to fire propagation between F3301 and F3302 - mode 6U	%M6U_G31
%F4197_M5	F4197	N/A	1.80E-01	1	1.80E-01	1.096E-02	1.97E-03	Loss of RWCU/SDC due to fire in fire area F4197 - mode 5	%M5_G31
%F4197_M5O	F4197	N/A	1.80E-01	1	1.80E-01	2.740E-03	4.93E-04	Loss of RWCU/SDC due to fire in fire area F4197 - mode 5O	%M5O_G31
%F4197_M6U	F4197	N/A	1.80E-01	1	1.80E-01	3.425E-03	6.16E-04	Loss of RWCU/SDC due to fire in fire area F4197 - mode 6U	%M6U_G31
%F4250_F4260_M5	F4250	F4260	4.50E-02	7.40E-03	3.33E-04	1.096E-02	3.65E-06	Loss of RWCU/SDC due to fire propagation between F4250 and F4260 - mode 5	%M5_G31
%F4250_F4260_M5O	F4250	F4260	4.50E-02	7.40E-03	3.33E-04	2.740E-03	9.12E-07	Loss of RWCU/SDC due to fire propagation between F4250 and F4260 - mode 5O	%M5O_G31
%F4250_F4260_M6U	F4250	F4260	4.50E-02	7.40E-03	3.33E-04	3.425E-03	1.14E-06	Loss of RWCU/SDC due to fire propagation between F4250 and F4260 - mode 6U	%M6U_G31
%F4550_F4560_M5	F4550	F4560	4.50E-02	7.40E-03	3.33E-04	1.096E-02	3.65E-06	Loss of RWCU/SDC due to fire propagation between F4550 and F4560 - mode 5	%M5_G31
%F4550_F4560_M5O	F4550	F4560	4.50E-02	7.40E-03	3.33E-04	2.740E-03	9.12E-07	Loss of RWCU/SDC due to fire propagation between F4550 and F4560 - mode 5O	%M5O_G31
%F4550_F4560_M6U	F4550	F4560	4.50E-02	7.40E-03	3.33E-04	3.425E-03	1.14E-06	Loss of RWCU/SDC due to fire propagation between F4550 and F4560 - mode 6U	%M6U_G31
%F5350_F5360_M5	F5350	F5360	2.60E-02	2.20E-04	5.72E-06	1.096E-02	6.27E-08	Loss of RWCU/SDC due to fire propagation between F5350 and F5360 - mode 5	%M5_G31
%F5350_F5360_M5O	F5350	F5360	2.60E-02	2.20E-04	5.72E-06	2.740E-03	1.57E-08	Loss of RWCU/SDC due to fire propagation between F5350 and F5360 - mode 5O	%M5O_G31
%F5350_F5360_M6U	F5350	F5360	2.60E-02	2.20E-04	5.72E-06	3.425E-03	1.96E-08	Loss of RWCU/SDC due to fire propagation between F5350 and F5360 - mode 6U	%M6U_G31
%F7300A_F7300B_M5	F7300A	F7300B	6.50E-03	7.40E-03	4.81E-05	1.096E-02	5.27E-07	Loss of service water due to fire propagation between F7300A and F7300B - mode 5	%M5_LPSWS
%F7300A_F7300B_M5O	F7300A	F7300B	6.50E-03	7.40E-03	4.81E-05	2.740E-03	1.32E-07	Loss of service water due to fire propagation between F7300A and F7300B - mode 5O	%M5O_LPSWS
%F7300A_F7300B_M6U	F7300A	F7300B	6.50E-03	7.40E-03	4.81E-05	3.425E-03	1.65E-07	Loss of service water due to fire propagation between F7300A and F7300B - mode 6U	%M6U_LPSWS
%F9150_F9160_M5	F9150	F9160	1.60E-03	1.20E-03	1.92E-06	1.096E-02	2.10E-08	Loss of preferred power due to fire propagation between F9150 and F9160 - mode 5	%M5_LOPP

Table 12.7-8

Shutdown Fire Ignition Frequencies Per Operating Mode

Shutdown Fire Initiator	Exposing Area	Exposed Area	Exposing Area Fire Frequency	Fire Barrier Failure Probability	Frequency (/SD-Year)	Conversion Factor	Frequency (/Year)	Description	Corresponding Internal Events Shutdown Initiator
%F9150_F9160_M5O	F9150	F9160	1.60E-03	1.20E-03	1.92E-06	2.740E-03	5.26E-09	Loss of preferred power due to fire propagation between F9150 and F9160 - mode 5O	%M5O_LOPP
%F9150_F9160_M6U	F9150	F9160	1.60E-03	1.20E-03	1.92E-06	3.425E-03	6.58E-09	Loss of preferred power due to fire propagation between F9150 and F9160 - mode 6U	%M6U_LOPP
%FSWYD_M5	FSWYD	N/A	5.20E-02	1	5.20E-02	1.096E-02	5.70E-04	Loss of preferred power due to fire in SWYD areas - mode 5	%M5_LOPP
%FSWYD_M5O	FSWYD	N/A	5.20E-02	1	5.20E-02	2.740E-03	1.42E-04	Loss of preferred power due to fire in SWYD areas - mode 5O	%M5O_LOPP
%FSWYD_M6U	FSWYD	N/A	5.20E-02	1	5.20E-02	3.425E-03	1.78E-04	Loss of preferred power due to fire in SWYD areas - mode 6U	%M6U_LOPP

12.8 CALCULATION OF CORE DAMAGE FREQUENCIES AND LARGE RELEASE FREQUENCIES

The calculation of the fire induced core damage frequency and large release frequency for each fire scenario requires the determination of the type of initiating event resulting from the fire damage as well as the fire-induced damage to mitigating systems credited in the PRA. Mitigating systems in the PRA include both safety and non-safety equipment.

The fire ignition frequencies for each fire area are discussed in the previous section. A fire in each of the analyzed fire areas of this analysis is assumed to damage all equipment in the area. The sections below describe the type of initiating event that best represents each fire scenario, and the associated core damage accident sequence frequency quantification.

The internal events PRA accident sequence structures, system fault trees, and success criteria are used in the calculation of the fire CDF and LRF. The CDF and LRF quantifications are performed at a quantification truncation limit of 1E-15/year.

Both at-power and shutdown fire-induced accident sequences are discussed.

12.8.1 Modifications to Internal Events PRA Models

The FPRA model includes the latest internal events PRA models, which incorporate all the design changes. Additional FPRA-specific steps for fire risk quantification are described in the following subsections.

12.8.2 Development of Fire-Induced Risk Model

The fire PRA models are based on the following internal events PRA models:

- Level 1 At-Power Internal Events PRA model documented in NEDO-33201 Section 7
- Level 2 At-Power Internal Events PRA model documented in NEDO-33201 Section 8 and Appendix 8A
- Shutdown Internal Events PRA model documented in NEDO-33201 Section 16

All fire-susceptible components in the subject fire area are assumed to fail for a postulated fire. A list of the failed components for a postulated fire is generated from the mapping developed from the basic events to components, from the components to rooms, and from rooms to fire areas.

Cable failures are evaluated for their impact on component failures. For the majority of the cable routing developed in task 3, the failure of cable induced by a fire in any room on the route is assumed to result in the failure of the subject component. For some safety-related valves, redundant signals are supplied to actuate the valves. Therefore, the failure of one control signal would not result in a failure of the component. In this case, the particular division of signal controlled by the cable is failed instead of the component.

For each fire scenario, the corresponding initiating event in the internal events PRA model is assigned with the evaluation of all failed components in the affected fire area(s). NEDE/NEDO-33386 Rev. 1 Subsections 4.1, 4.2, and 4.3 document the bases for the fire-induced component failures.

12.8.3 Calculation of Full-Power Core Damage Frequencies

The following paragraphs describe the initiating events and the equipment damage assumed for fire scenarios defined during power operation. Table 12.8-1 summarizes the damage caused by the fire in each selected location.

12.8.3.1 Control Building, Q-DCIS Electrical Rooms

A general transient initiating event is assumed for a fire in a single fire area in the safety-related Q-DCIS electrical rooms. A fire-induced inadvertent opening of an SRV (IORV) is not possible in these rooms because of the specific ESBWR design.

Failure of the corresponding safety system division is assumed for a fire in each of the Q-DCIS areas.

The existence of fire detection and suppression systems, fire barriers, and adequate monitoring and supervision allow the assumption that fire propagation to the neighboring zones separated by those barriers is a relatively negligible contribution. Nevertheless, potential inter-division propagation cases are considered in this analysis.

12.8.3.2 Control Building, N-DCIS Electrical Rooms and DPS Room

A loss of feedwater initiating event is assumed in the nonsafety-related N-DCIS electrical rooms since feedwater and condensate system control cabinets are located in both N-DCIS rooms. A fire in room 3301 fails N-DCIS train A and a fire in room 3302 fails N-DCIS train B. There is a corridor area between the two N-DCIS rooms.

The DPS cabinet is located in the DPS room (a separate fire area), which is enclosed by N-DCIS room 3301. A fire in the DPS room will result in loss of all DPS control signals, which is a backup to various safety-related Q-DCIS and RPS functions.

12.8.3.3 Main Control Room

In general, operator actions are minimized by design to improve the safety of ESBWR plants. Since the main control room (MCR) communicates with the DCIS rooms via fibers, no spurious actuation will originate from a MCR fire. The remote shutdown panels give the operators redundant locations to perform safe shutdown-related functions. As a defense-in-depth measure, the remote shutdown panels will be available for the operators to monitor and control the cooldown rates in the MCR fire scenario. DCD Tier 2, Subsection 19A.4.2.1 states "A fire in the control room does not affect the automatic actuations of the safety systems. Additionally, the existence of remote shutdown panels allows the detection of failed automatic actuations and the performance of compensatory manual actuations." Therefore, it is conservative not to model the compensatory manual actuations that can mitigate the failed automatic actuations.

The following address the relationship between the MCR and the remote shutdown panel and other design features of the main control room:

- If the MCR evacuation is necessary, the remote shutdown panels provide complete redundancy in terms of control and monitoring for safe shutdown functions. Although not all the detailed designs are available, the remote shutdown panels are designed to be located in the reactor building.

- The transfer of operations from the MCR to the remote shutdown panels is not required since the remote shutdown panels are designed to have all the function available at the MCR. The ESBWR design features as described in DCD Tier 2, Subsection 7.1.3 help minimize the adverse affect on safe shutdown due to fire-induced spurious actuations.
- The MCR is located in the control building (fire area F3270) and remote shutdown panels are located in separate fire areas in the reactor building. The MCR has its own dedicated ventilation system (CRHAVS) and the remote shutdown panels ventilation system will be using the reactor building ventilation system (CLAVS).
- The ESBWR MCR design does not have main control boards as in a traditional nuclear power plant. The safety-related and nonsafety-related electrical cabinets are located in the separate DCIS rooms, which are in different fire areas. The MCR communicates with these DCIS rooms via fiber-optic cables. The cabinets in MCR are the control consoles and the wide display panels. Therefore only low voltage and low current equipment will be included in the MCR. Administrative procedures will be used to limit the amount of transient loads that can be brought into the MCR. The weighting factor on transient ignition source is increased to account for continuous occupation.
- The MCR and remote shutdown panels are located in totally different buildings. No smoke propagation from MCR to other fire areas is postulated since the MCR has its own ventilation system.
- At this time, the SCRAM and MSIV closure will have hard-wired controls in the MCR, which does not affect the PRA model.

A general transient initiating event is assumed for the control room fire analysis. A fire-induced inadvertent opening of an SRV (IORV) in this room is not possible because of the ESBWR optical fiber design.

12.8.3.4 Reactor Building Divisional Zones

With the ESBWR design to prevent spurious actuations that could adversely affect safe shutdown, a single fire in these areas cannot cause an inadvertent opening of an SRV (IORV). It is conservatively assumed that some fire propagation scenarios between these fire areas would result in spurious actuations, which lead to IORV. This spurious operation disables the ICS while preserving the full requirement for depressurizing the plant. If multiple valves are opened due to the fire, depressurization to allow passive GDCS to operate becomes increasingly more reliable. However, credit is not taken for the spurious failures to depressurize the RCS.

Failure of the corresponding safety system division is assumed for a fire in each of the reactor building divisional areas. The existence of fire detection and suppression systems, fire barriers, and adequate monitoring and supervision means that it can be assumed that fire propagation to the neighboring zones separated by those barriers is a relatively negligible contribution. Nevertheless, potential inter-division propagation cases are considered in this analysis.

12.8.3.5 Non-divisional Areas of Electrical Building

A general transient initiating event is assumed for a fire in these areas.

The existence of fire detection and suppression systems, fire barriers, and adequate monitoring and supervision means that it can be assumed that fire propagation to the neighboring zones separated by those barriers is a relatively negligible contribution. Nevertheless, potential inter-division propagation cases are considered in this analysis.

12.8.3.6 Turbine Building

A fire in the turbine building general area (F4197) is assumed to fail the feedwater and condensate systems; as such, the loss of feedwater initiator is assumed for a turbine building fire. In addition, the analysis assumes complete failure of the instrument air system assuming the cables are routed through F4197.

Fires in the EHC room and the turbine lube oil room would also result in a general transient initiating event. No other PRA components are impacted for these scenarios.

A fire in each of the RCCW and IAS areas in the turbine building is also assumed to result in a general transient initiating event.

The existence of fire detection and extinction systems, firewall barriers, and adequate monitoring and supervision means that it can be assumed that fire propagation to the neighboring zones separated by those barriers is a relatively negligible contribution. Nevertheless, potential inter-area propagation cases are considered in this analysis.

12.8.3.7 Other Buildings

A general transient initiating event is assumed for fires in the unscreened areas of the fuel building. The fire is assumed to fail the FAPCS system.

A general transient initiating event is conservatively assumed for a fire in the service water building fire area F7300A or F7300B. No other PRA components are damaged.

A loss of power conversion system initiator is assumed for a fire in the pumphouse area (F7100). This fire scenario is assumed to result in the loss of the circulating water system, which in turn fails the feedwater and condensate system. No other PRA components are damaged.

A general transient initiating event is assumed for a fire in the fire protection enclosure fire areas (fire area F19101 through F19161). The primary and secondary fire protection system pumps are separated in different fire areas.

A fire in the cable tunnels can also result in plant trip. A general transient initiating event is assumed for these scenarios.

12.8.3.8 Fire Propagation Scenarios

The fire propagation scenarios are discussed in Subsection 12.3.3. Due to the difference in the fire-induced initiators, the most limiting initiator for the two adjacent fire areas is selected for the fire propagation scenarios. If the single fire scenarios result in both a loss of feedwater and a general transient, a loss of feedwater initiator is assumed rather than a general transient.

Moreover, for some fire propagation scenarios in reactor building, an inadvertent opening of relief valve (IORV) initiator is assumed. The fire propagation between the two cable tunnels is simulated with a loss of preferred power initiator, which is more limiting than a general transient.

12.8.4 Calculation of Shutdown Core Damage Frequencies

Table 12.8-2 summarizes the damage states caused by the postulated fire in each fire scenario. The baseline shutdown PRA model is based on the Level 1 Full-Power PRA model with no new system models. Although success criteria for some systems may be changed for the shutdown model, no new components are added in the shutdown model. Therefore, the fire-induced risk model used for Level 1 Full-Power fire PRA model is still applicable.

The baseline shutdown model credits some additional recovery actions listed in Table 16.3-5. A postulated fire that results in a shutdown initiating event is assumed to defeat these additional recovery actions. Therefore, the master flag file used in baseline shutdown PRA model is modified to include the failure of these recovery actions for the fire analyses.

There are some potential limitations of the fire protection system (FPS). In a postulated fire scenario, it is likely that some of the FPS pumps are in use for the fire suppression purpose even though they are in the event trees for low-pressure injection. Part of the inventories in the FPS water storage tanks would be used for the fire suppression purpose. However, the availability of the FPS pumps for low-pressure makeup is not a concern since the FPS design includes multiple pumps for redundancy. Per DCD Tier 2, Subsection 9.5.1.4, each primary firewater storage tank has sufficient capacity to meet the maximum firewater demand of the system for a period of 120 minutes. The primary, Seismic Category I, firewater storage tanks provide post-accident makeup water to the IC/PCC pools and Spent Fuel Pool using FAPCS piping. The primary firewater storage tanks have sufficient capacity to meet the total demand from 72 hours up to 7 days. After 7 days, on-site or offsite makeup sources can be used. The operator action to make up the inventory is already modeled for the FPS. In summary, the potential limitations of the FPS are not a concern to the fire analyses.

The dominant shutdown fire scenarios are described below.

12.8.4.1 Turbine Building General Area (F4197)

A fire in the turbine building general area (fire area F4197) is assumed to result in a complete failure of the service air system due to cable failures, which resulted in the closure of all RWCU containment isolation valves outside the containment.

Other systems failed by a postulated fire in F4100 include condensate and feedwater system, TCCWS, Service Air system, and UPS buses in turbine building, etc. These failures make fire area F4197 a significant risk contributor to the shutdown fire risk.

The cabling for reactor component cooling water (RCCW) system and plant service water (PSW) system is assumed not to be failed by a fire in F4197 since these two systems have been identified as part of the Regulatory Treatment of Non-Safety System (RTNSS) program. The design requirements for RTNSS systems assure that a postulated fire would not damage both trains. Moreover, the cable routing can easily bypass the turbine building general areas.

It is conservatively assumed that 50% of total fire ignition frequency in the turbine building is applicable to the turbine building general area (fire area F4197) since this fire area covers a large portion of the turbine building. This results in a shutdown frequency of 1.8E-1/shutdown-year for F4197. Realistically the F4197 fire ignition frequency could be much lower than this value.

12.8.4.2 Switchyard

A fire in the switchyard is conservatively assumed to result in loss of decay heat removal. The transfer from the offsite power to diesel generators is assumed to be not fast enough to prevent the failure of RWCU system, which is conservative.

Since no PRA component is located in the switchyard and the baseline contribution of loss of preferred power is low, the risk impact due to switchyard fires is not significant.

12.8.4.3 Fire Propagation Scenarios

The fire propagation scenario for F1152 and F1162 is conservative since a postulated fire in one of the RWCU pump rooms has to pass through an access tunnel with two non-fire doors, a corridor area, a fire door between the two fire areas, another corridor area, and another access tunnel with two non-fire doors to the other RWCU pump room.

A fire propagation scenario in the service water building (fire area F7300A and F7300B) is assumed to result in a complete failure of the plant service water (PSW) system, which results in the loss of decay heat removal.

Other postulated fire propagation scenarios are also very conservative in that a fire has to propagate through a third fire area to result in a shutdown initiating event (e.g., a fire in control building that fails components in both room 3301 and 3302 has to pass through the corridor which is another fire area F3100).

However, even with the conservative modeling, the total shutdown risk contribution from all the fire propagation scenarios is not significant, which is shown in the shutdown fire risk results.

12.8.4.4 Other Considerations

For all modeled shutdown fire scenarios that are outside of the main control room (MCR), the MCR should still be available. Therefore, the remote shutdown panels are not modeled under the shutdown conditions. Instead, the MCR fire scenario is modeled with conservative assumptions (i.e., credit only automated equipment by assuming all operator actions failed except the manual scram) under the full-power conditions. This fire scenario bounds the MCR fire scenarios under all other modes except modes 5 and 6. Cold shutdown and refueling are considered in the shutdown PRA models. No credit has been taken for the remote shutdown panels in this fire scenario. Per DCD Tier 2, Subsection 7.4.2.2.3, normally the turbine bypass valves automatically control reactor pressure, and the reactor feedwater system automatically maintains vessel water level. With these functions available, reactor cooldown is achieved through the normal heat sinks. Per DCD Tier 2, Subsection 5.4.8.2.2, the entire cooldown using RWCU/SDC is controlled automatically and provides the capability to bring the reactor from high-pressure conditions to cold shutdown.

A fire in main control room (MCR) will not result in a shutdown initiator. The ESBWR main control room (MCR) is designed differently from the traditional main control room. The ESBWR MCR controls are connected to the back panel rooms via fiber-optic cables, which are unaffected by the MCR fire. The loss (including melting) of the cables or Visual Display Units (VDUs) will not cause inadvertent actuations or affect the automatic actions associated with safety and nonsafety equipment. The fires in the back panel rooms are evaluated separately with consideration of the impact on the operability of automatic systems. Under the modeled

shutdown conditions (modes 5 and 6), the reactor has been successfully cooled down with Reactor Water Cleanup/Shutdown Cooling (RWCU/SDC) system running automatically.

12.8.5 Calculation of Large Release Frequencies

The quantification of the large release frequencies is similar to the core damage frequency calculations with the addition of the Level 2 event trees, fault tree models and phenomenological point estimates. The fire-induced risk model used for Level 1 quantification is not changed since the component selection and cable selection tasks have already considered all components that include the Level 2 components.

Similar to baseline shutdown PRA results, all evaluated shutdown fire core damage events are assumed to result in a large release because of the potential for the containment being open during the outage.

Table 12.8-1

Damage States for Postulated Full-Power Fire Scenarios

Fire Scenario	Description	Initiating Event	Damage States
F1110	HCU A	%T-GEN	A postulated fire in F1110 fails ARI.
F1120	HCU C	%T-GEN	A postulated fire in F1120 fails ARI.
F1130	HCU B	%T-GEN	No PRA component is failed.
F1140	HCU D	%T-GEN	No PRA component is failed.
F1150	Nonsafety NW quadrant	%T-GEN	A postulated fire in F1150 fails RWCU train A, CRD Panel A, 480VAC R12-C31, etc. It also fails Div I safety-related control signals.
F1152	Nonsafety NE quadrant	%T-GEN	A postulated fire in F1152 fails RWCU train A, some FAPCS train A components, 480VAC R12-C31, CRD pump A, some DPS control signals, etc.
F1160	Nonsafety SW quadrant	%T-GEN	A postulated fire in F1160 fails RWCU train B, CRD Panel D, 480VAC R12-D31, etc. It also fails part of DPS signals and Div IV safety-related control signals.
F1162	Nonsafety SE quadrant	%T-GEN	A postulated fire in F1162 fails RWCU train B, some FAPCS train B components, 480VAC R12-B31, CRD pump B, some DPS control signals, etc.
F1203	CRD and Containment Access	%T-GEN	A postulated fire in F1203 fails CRD system.
F1210	Division 1 Battery	%T-GEN	A postulated fire in F1210 fails Div I batteries. It also fails CRD components.
F1220	Division 2 Battery	%T-GEN	A postulated fire in F1220 fails Div II batteries. It also fails CRD components and Train B RWCU valves.
F1230	Division 3 Battery	%T-GEN	A postulated fire in F1230 fails Div III batteries. It also fails CRD pump A and RWCU valves.
F1240	Division 4 Battery	%T-GEN	A postulated fire in F1230 fails Div III batteries. It also fails CRD pump A and RWCU valves.
F1262	B Demineralizers	%T-GEN	A postulated fire in F1262 fails RWCU/SDC train B.
F1311	Division 1 Electrical	%T-GEN	A postulated fire in F1311 fails Div I safety-related RMUs and load drivers, Div I UPS buses, SLC train A, etc. It also fails Div I safety-related control signals.

Table 12.8-1

Damage States for Postulated Full-Power Fire Scenarios

Fire Scenario	Description	Initiating Event	Damage States
F1321	Division 2 Electrical	%T-GEN	A postulated fire in F1321 fails Div II safety-related RMUs and load drivers, Div II UPS buses, SLC train B, etc. It also fails Div II safety-related control signals and some DPS control signals.
F1331	Division 3 Electrical	%T-GEN	A postulated fire in F1331 fails Div III safety-related RMUs and load drivers, Div III UPS buses, SLC train A, etc. It also fails Div III safety-related control signals and some DPS control signals.
F1341	Division 4 Electrical	%T-GEN	A postulated fire in F1341 fails Div IV safety-related RMUs and load drivers, Div IV UPS buses, SLC train B, etc. It also fails Div IV safety-related control signals.
F1600	Refueling Floor and Common Access	%T-GEN	No PRA component is failed.
F1770	Main Steam Tunnel	%T-GEN	A postulated fire in F1770 fails MSIV outside containment.
F19101	Electric Motor Driven G21 Pump	%T-GEN	A postulated fire in F19101 fails the electric motor driven G21 pump.
F19150	Primary Electric Motor Driven Fire Pump	%T-GEN	A postulated fire in F19150 fails the primary electric motor driven fire pumps.
F19160	Primary Diesel Driven Fire Pump	%T-GEN	A postulated fire in F19160 fails the primary diesel driven fire pumps.
F19161	Primary Diesel Fire Pump Fuel Oil Storage Tank	%T-GEN	No PRA component is failed.
F2100	New and Spent Fuel Handling	%T-GEN	A postulated fire in F2100 fails FAPCS.
F3110	Division 1 Electrical	%T-GEN	A postulated fire in F3110 fails Div I safety-related control signals.
F3120	Division 2 Electrical	%T-GEN	A postulated fire in F3120 fails Div II safety-related control signals.
F3130	Division 3 Electrical	%T-GEN	A postulated fire in F3130 fails Div III safety-related control signals.
F3140	Division 4 Electrical	%T-GEN	A postulated fire in F3140 fails Div IV safety-related control signals.
F3150	DPS Control Room	%T-GEN	A postulated fire in FDPS fails the DPS System.
F3270	Main Control Room Complex	%T-PCS	A postulated fire in F3270 fails all operator actions.

Table 12.8-1

Damage States for Postulated Full-Power Fire Scenarios

Fire Scenario	Description	Initiating Event	Damage States
F3301	Nonsafety-Related Electrical Train A	%T-FDW	A postulated fire in F3301 fails RWCU train A, FAPCS train A, CRD pump A, condensate and feedwater system, RCCWS train A, PSWS train A, Fire protection system pump U43-P1B, etc.
F3302	Nonsafety-Related Electrical Train B	%T-FDW	A postulated fire in F3302 fails RWCU train B, FAPCS train B, CRD pump B, condensate and feedwater system, RCCWS train B, PSWS train B, Fire protection system pump U43-P2B, etc.
F39151	Ancilliary Diesel Generator A/Fuel Oil Storage	%T-GEN	A postulated fire in F39151 fails the fuel oil transfer pump for ancillary diesel generator A.
F39161	Ancilliary Diesel Generator B/Fuel Oil Storage	%T-GEN	A postulated fire in F39161 fails the fuel oil transfer pump for ancillary diesel generator B.
F39252	Ancilliary Generator A	%T-GEN	A postulated fire in F39252 fails the fancillary diesel generator A.
F39253	ADG Electrical & Control Equipment Room B	%T-GEN	A postulated fire in F39253 fails the fancillary diesel generator bus A.
F39262	Ancilliary Diesel Generator B	%T-GEN	A postulated fire in F39262 fails the fancillary diesel generator B.
F39263	ADG Electrical & Control Equipment room A	%T-GEN	A postulated fire in F39263 fails the fancillary diesel generator bus B.
F4197	Turbine Equipment	%T-FDW	A postulated fire in F4197 fails condensate and feedwater system, TCCWS, Instrument Air system, and Service Air system, etc.
F4250	Reactor Component Cooling Water A	%T-GEN	A postulated fire in F4250 fails RCCWS train A.
F4260	Reactor Component Cooling Water B	%T-GEN	A postulated fire in F4260 fails RCCWS train B.
F4271	Phase A Main Transformer	%T-GEN	A postulated fire in F4271 fails the main transformer. But no PRA component is impacted.
F4272	Phase B Main Transformer	%T-GEN	A postulated fire in F4272 fails the main transformer. But no PRA component is impacted.
F4273	Phase C Main Transformer	%T-GEN	A postulated fire in F4273 fails the main transformer. But no PRA component is impacted.
F4302	Instrument Air / Service Air Train A	%T-GEN	A postulated fire in F4302 fails instrument and service air train A.

Table 12.8-1

Damage States for Postulated Full-Power Fire Scenarios

Fire Scenario	Description	Initiating Event	Damage States
F4303	Instrument Air / Service Air Train B	%T-GEN	A postulated fire in F4303 fails instrument and service air train B.
F4403	Turbine Lube Oil	%T-GEN	A postulated fire in F4403 causes the turbine and plant trip. But no PRA component is impacted.
F4550	Chilled Water A	%T-GEN	A postulated fire in F4550 fails nuclear-island chiller water train A.
F4560	Chilled Water B	%T-GEN	A postulated fire in F4560 fails nuclear-island chiller water train B.
F5100	Corridors	%T-GEN	A postulated fire in F5100 fails the power cables routed through this area.
F5151	Batteries A	%T-GEN	A postulated fire in F5151 fails the train A non-safety batteries.
F5153	Diesel Generator A	%T-GEN	A postulated fire in F5153 fails the standby diesel generator A.
F5154	Cable Chase Train A	%T-GEN	A postulated fire in F5154 fails PIP A power cables.
F5157	Reserve Auxiliary Transformer A	%T-GEN	A postulated fire in F5157 fails RAT A.
F5158	Unit Auxiliary Transformer A	%T-GEN	A postulated fire in F5158 fails UAT A.
F5161	Batteries B	%T-GEN	A postulated fire in F5161 fails the train B non-safety batteries.
F5163	Diesel Generator B	%T-GEN	A postulated fire in F5163 fails the standby diesel generator B.
F5164	Cable Chase Train B	%T-GEN	A postulated fire in F5164 fails PIP B power cables.
F5167	Reserve Auxiliary Transformer B	%T-GEN	A postulated fire in F5167 fails RAT B.
F5168	Unit Auxiliary Transformer B	%T-GEN	A postulated fire in F5158 fails UAT B.
F5201	Switchgear, Lower Cable & Battery Charger I	%T-GEN	A postulated fire in F5201 fails train A 13.8 kV switchgears.
F5202	Battery C	%T-GEN	A postulated fire in F5202 fails non-safety battery C.
F5203	LC & Battery Charger III	%T-GEN	A postulated fire in F5203 fails non-safety UPS bus C and load center C23.
F5204	Switchgear, Lower Cable & Battery Charger II	%T-GEN	A postulated fire in F5204 fails train B 13.8 kV switchgears.
F5205	Electronic Equipment	%T-GEN	A postulated fire in F5205 fails the power cables passing through it.
F5250	Day Tank A	%T-GEN	No PRA component is failed.
F5251	Diesel Generator Electrical & Control Equipment Room A	%T-GEN	No PRA component is failed. It could fail standby diesel generator A.

Table 12.8-1

Damage States for Postulated Full-Power Fire Scenarios

Fire Scenario	Description	Initiating Event	Damage States
F5260	Day Tank B	%T-GEN	No PRA component is failed.
F5261	Diesel Generator Electrical & Control Equipment Room B	%T-GEN	No PRA component is failed. It could fails standby diesel generator B.
F5350	Electrical Equipment A	%T-GEN	A postulated fire in F5350 fails train A 6.9 kV switchgears.
F5360	Electrical Equipment B	%T-GEN	A postulated fire in F5360 fails train B 6.9 kV switchgears.
F7100	Pump House	%T-PCS	A postulated fire in F7100 fails the circulating water system.
F7300A	Service Water / Water Treatment Building Train A	%T-GEN	A postulated fire in F7300A fails the plant service water train A.
F7300B	Service Water / Water Treatment Building Train B	%T-GEN	A postulated fire in F7300B fails the plant service water train B.
F9150	Cable Tunnel A	%T-GEN	A postulated fire in F9150 fails all the cabling for train A components of nonsafety-related systems including all the power cables.
F9160	Cable Tunnel B	%T-GEN	A postulated fire in F9160 fails all the cabling for train B components of nonsafety-related systems including all the power cables.
FSWYD	Switchyard (assumed)	%T-LOPP-SC	No PRA component is failed. Assumed no recovery of offsite power due to the fire.

Table 12.8-2

Damage States for Postulated Shutdown Fire Scenarios

Shutdown Fire Initiator	Description	Initiating Event	Damage States
%F1152_F1162_M5	Loss of RWCU/SDC due to fire propagation between F1152 and F1162 - mode 5	%M5-G31	A postulated fire in F1152 fails RWCU train A, some FAPCS train A components, 480VAC R12-C31, CRD pump A, some DPS control signals, etc. A postulated fire in F1162 fails RWCU train B, some FAPCS train B components, 480VAC R12-B31, CRD pump B, some DPS control signals, etc.
%F1152_F1162_M5O	Loss of RWCU/SDC due to fire propagation between F1152 and F1162 - mode 5O	%M5O_G31	
%F1152_F1162_M6U	Loss of RWCU/SDC due to fire propagation between F1152 and F1162 - mode 6U	%M6U_G31	
%F3301_F3302_M5	Loss of RWCU/SDC due to fire propagation between F3301 and F3302 - mode 5	%M5-G31	A postulated fire in F3301 fails RWCU train A, FAPCS train A, CRD pump A, condensate and feedwater system, RCCWS train A, PSWS train A, Fire protection system pump U43-P1B, etc. A postulated fire in F3302 fails RWCU train B, FAPCS train B, CRD pump B, condensate and feedwater system, RCCWS train B, PSWS train B, Fire protection system pump U43-P2B, etc.
%F3301_F3302_M5O	Loss of RWCU/SDC due to fire propagation between F3301 and F3302 - mode 5O	%M5O_G31	

Table 12.8-2

Damage States for Postulated Shutdown Fire Scenarios

Shutdown Fire Initiator	Description	Initiating Event	Damage States
%F3301_F3302_M6U	Loss of RWCU/SDC due to fire propagation between F3301 and F3302 - mode 6U	%M6U_G31	
%F4197_M5	Loss of RWCU/SDC due to fire in fire area F4197 - mode 5	%M5-G31	A postulated fire in F4197 fails condensate and feedwater system, TCCWS, Instrument Air system, and Service Air system, etc.
%F4197_M5O	Loss of RWCU/SDC due to fire in fire area F4197 - mode 5O	%M5O_G31	
%F4197_M6U	Loss of RWCU/SDC due to fire in fire area F4197 - mode 6U	%M6U_G31	
%F4250_F4260_M5	Loss of RWCU/SDC due to fire propagation between F4250 and F4260 - mode 5	%M5-G31	A postulated fire in F4250 fails RCCWS train A. A postulated fire in F4260 fails RCCWS train B.
%F4250_F4260_M5O	Loss of RWCU/SDC due to fire propagation between F4250 and F4260 - mode 5O	%M5O_G31	
%F4250_F4260_M6U	Loss of RWCU/SDC due to fire propagation between F4250 and F4260 - mode 6U	%M6U_G31	
%F4550_F4560_M5	Loss of RWCU/SDC due to fire propagation between F4550 and F4560 - mode 5	%M5-G31	A postulated fire in F4550 fails Nuclear-Island Chilled Water train A. A postulated fire in F4560 fails Nuclear-Island Chilled Water train B.
% F4550_F4560_M5O	Loss of RWCU/SDC due to fire propagation between F4550 and F4560 - mode 5O	%M5O_G31	

Table 12.8-2

Damage States for Postulated Shutdown Fire Scenarios

Shutdown Fire Initiator	Description	Initiating Event	Damage States
% F4550_F4560_M6U	Loss of RWCU/SDC due to fire propagation between F4550 and F4560 - mode 6U	%M6U_G31	
%F5350_F5360_M5	Loss of RWCU/SDC due to fire propagation between F5350 and F5360 - mode 5	%M5-G31	A postulated fire in F5350 fails all train A 6.9kV switchgear, load centers and MCCs. It also fails the nonsafety train A DC buses and UPS. As a result of failure of DC buses, DG A is also failed. A postulated fire in F5360 fails all train B 6.9kV switchgear, load centers and MCCs. It also fails the nonsafety train B DC buses and UPS. As a result of failure of DC buses, DG B is also failed.
%F5350_F5360_M5O	Loss of RWCU/SDC due to fire propagation between F5350 and F5360 - mode 5O	%M5O_G31	
%F5350_F5360_M6U	Loss of RWCU/SDC due to fire propagation between F5350 and F5360 - mode 6U	%M6U_G31	
%F7300A_F7300B_M5	Loss of service water due to fire propagation between fire areas F7300A and F7300B - mode 5	%M5_LPSWS	A postulated fire propagation between fire areas F7300A and F7300B fails the plant service water system.
%F7300A_F7300B_M5O	Loss of service water due to fire propagation between fire areas F7300A and F7300B - mode 5O	%M5O_LPSWS	
%F7300A_F7300B_M6U	Loss of service water due to fire propagation between fire areas F7300A and F7300B - mode 6U	%M6U_LPSWS	
%F9150_F9160_M5	Loss of preferred power due to fire propagation between F9150 and F9160 - mode 5	%M5-LOPP	A postulated fire in F9150 fails all the cabling for train A components of nonsafety-related systems including all the power

Table 12.8-2

Damage States for Postulated Shutdown Fire Scenarios

Shutdown Fire Initiator	Description	Initiating Event	Damage States
%F9150_F9160_M5O	Loss of preferred power due to fire propagation between F9150 and F9160 - mode 5O	%M5O_LOPP	cables. A postulated fire in F9160 fails all the cabling for train B components of nonsafety-related systems including all the power cables.
%F9150_F9160_M6U	Loss of preferred power due to fire propagation between F9150 and F9160 - mode 6U	%M6U_LOPP	
%FSWYD_M5	Loss of preferred power due to fire in SWYD areas - mode 5	%M5-LOPP	No PRA component is failed. Assumed no recovery of offsite power due to the fire.
%FSWYD_M5O	Loss of preferred power due to fire in SWYD areas - mode 5O	%M5O_LOPP	
%FSWYD_M6U	Loss of preferred power due to fire in SWYD areas - mode 6U	%M6U_LOPP	

12.9 RESULTS

12.9.1 Baseline Fire PRA Results

The core damage frequency (CDF) and large release frequency (LRF) results for the ESBWR probabilistic internal fires analysis are summarized in the following tables:

- CDF Contribution of Full-Power Fire Scenarios (Table 12.9-1)
- LRF Contribution of Full-Power Fire Scenarios (Table 12.9-2)
- CDF Contribution of Shutdown Fire Scenarios (Table 12.9-3)

Each table lists the fire area, fire scenario initiation frequency, and the resulting core damage frequency.

Quantified with a truncation limit of 1E-15/year, the total CDF for all full-power fire scenarios is 1.25E-8/year. The total LRF for all full-power fire scenarios is 1.56E-9/year. With the same truncation limit, the total CDF for all shutdown fire scenarios is 9.56E-9/year.

The top 200 cutsets for the internal fire CDF are listed in the following tables:

- Table 12.9-4 for the full-power internal fires CDF cutsets
- Table 12.9-5 for the shutdown internal fires CDF cutsets

The risk importance measures for the internal fire CDF are listed as follows. The significant basic events (i.e., basic events that have a FV importance greater than 0.005 or a RAW importance greater than 2) are included in the tables.

- Table 12.9-6 for the full-power internal fires CDF significant basic events
- Table 12.9-7 for the shutdown internal fires CDF significant basic events

This is a screening analysis that incorporates a number of conservative assumptions (refer to Section 12.2). For these reasons, it is inappropriate to add these fire CDF results to the internal events core damage frequencies.

12.9.2 Sensitivity Study Fire PRA Results

One sensitivity study case for the full-power fire PRA model has been constructed to investigate the risk importance of fire PRA modeling assumption associated with DPS cable separation (Assumption 18.d in subsection 12.2.4).

A different assumption to Assumption 18.d is described as follows:

> *The DPS load drivers in the Reactor Building are grouped together. The cable routing from the DPS room in the Control Building to the Reactor Building does not follow the separation criteria of PIP A and B components and cables.*

With the above alternate assumption, the total full-power fire CDF is quantified to be approximately 4.1E-7/year, which is more than a magnitude higher than the baseline value. The full-power fire LRF is quantified to be about 2.8E-8/year, which is also more than a magnitude higher than the baseline value.

Other sensitivity studies for fire PRA results are included in Section 11, which includes the following topics:

- Focused full-power fire CDF
- Focused full-power fire LRF
- Focused shutdown fire CDF
- Fire barrier sensitivity studies for full-power CDF/LRF
- Fire barrier sensitivity studies for shutdown CDF

The importance of nonsafety-related systems in the fire analyses is demonstrated in the sensitivity studies for the focused full-power and shutdown fire cases.

Table 12.9-1

Full Power Core Damage Frequency Due to Internal Fires

Fire Scenarios (see note)	IE Frequency (/yr)	CCDP	Fire CDF (/yr)	% Fire CDF
F1110	3.56E-04	2.18E-09	7.78E-13	0.01%
F1120	3.80E-04	2.22E-09	8.45E-13	0.01%
F1130	2.57E-04	1.89E-09	4.86E-13	0.00%
F1140	2.57E-04	1.89E-09	4.86E-13	0.00%
F1150	3.12E-03	1.51E-08	4.71E-11	0.38%
F1152	4.10E-03	1.16E-08	4.78E-11	0.38%
F1160	2.55E-03	2.48E-09	6.33E-12	0.05%
F1162	3.77E-03	2.81E-08	1.06E-10	0.85%
F1203	2.34E-03	1.49E-08	3.48E-11	0.28%
F1210	5.18E-04	1.47E-08	7.60E-12	0.06%
F1210_F1150	1.40E-06	7.14E-09	1.00E-14	0.00%
F1210_F1230	3.83E-06	1.30E-07	4.98E-13	0.00%
F1210_F1240	3.83E-06	1.59E-08	6.08E-14	0.00%
F1210_F1311	6.22E-07	6.85E-07	4.26E-13	0.00%
F1220	6.05E-04	1.47E-08	8.90E-12	0.07%
F1220_F1162	1.63E-06	7.36E-09	1.20E-14	0.00%
F1220_F1203	7.26E-07	7.35E-09	5.34E-15	0.00%
F1220_F1230	4.48E-06	1.69E-08	7.58E-14	0.00%
F1220_F1240	4.48E-06	1.33E-07	5.96E-13	0.00%
F1220_F1321	7.26E-07	6.87E-07	4.99E-13	0.00%
F1230	4.07E-04	7.89E-09	3.21E-12	0.03%
F1230_F1152	1.10E-06	0.00E+00	0.00E+00	0.00%
F1230_F1210	3.01E-06	1.21E-07	3.64E-13	0.00%
F1230_F1220	3.01E-06	1.03E-08	3.09E-14	0.00%
F1230_F1262	4.89E-07	0.00E+00	0.00E+00	0.00%
F1230_F1331	4.89E-07	1.10E-07	5.36E-14	0.00%
F1240	4.07E-04	1.46E-08	5.96E-12	0.05%
F1240_F1160	1.10E-06	7.27E-09	8.00E-15	0.00%
F1240_F1210	3.01E-06	1.03E-08	3.09E-14	0.00%
F1240_F1220	3.01E-06	1.22E-07	3.68E-13	0.00%
F1240_F1341	4.89E-07	4.60E-07	2.25E-13	0.00%
F1262	2.66E-04	1.90E-09	5.05E-13	0.00%
F1311	2.58E-03	2.51E-07	6.48E-10	5.18%
F1311_F1150	6.97E-06	7.16E-07	4.99E-12	0.04%
F1311_F1210	3.10E-06	7.02E-07	2.18E-12	0.02%
F1311_F1331	1.91E-05	3.50E-07	6.69E-12	0.05%
F1311_F1341	1.91E-05	2.56E-07	4.89E-12	0.04%
F1321	2.49E-03	2.53E-07	6.29E-10	5.03%
F1321_F1162	6.71E-06	7.53E-07	5.05E-12	0.04%
F1321_F1203	1.84E-05	2.60E-07	4.78E-12	0.04%

Table 12.9-1

Full Power Core Damage Frequency Due to Internal Fires

Fire Scenarios (see note)	IE Frequency (/yr)	CCDP	Fire CDF (/yr)	% Fire CDF
F1321_F1220	2.98E-06	7.05E-07	2.10E-12	0.02%
F1321_F1341	1.84E-05	2.72E-07	5.01E-12	0.04%
F1331	2.60E-03	4.47E-09	1.16E-11	0.09%
F1331_F1152	7.03E-06	3.41E-07	2.40E-12	0.02%
F1331_F1203	1.93E-05	1.72E-08	3.33E-13	0.00%
F1331_F1230	3.12E-06	1.73E-07	5.39E-13	0.00%
F1331_F1311	1.93E-05	3.50E-07	6.76E-12	0.05%
F1341	2.67E-03	2.54E-09	6.79E-12	0.05%
F1341_F1160	7.20E-06	1.01E-07	7.24E-13	0.01%
F1341_F1240	3.20E-06	4.88E-07	1.56E-12	0.01%
F1341_F1311	1.97E-05	2.56E-07	5.04E-12	0.04%
F1341_F1321	1.97E-05	2.74E-07	5.40E-12	0.04%
F1600	4.26E-04	2.19E-09	9.34E-13	0.01%
F1770	2.95E-04	5.25E-09	1.55E-12	0.01%
F19101	6.86E-04	2.22E-09	1.53E-12	0.01%
F19150	1.20E-03	2.35E-09	2.83E-12	0.02%
F19160	1.17E-03	2.39E-09	2.80E-12	0.02%
F19161	1.90E-04	1.87E-09	3.55E-13	0.00%
F2100	2.22E-03	3.61E-09	8.03E-12	0.06%
F3110	1.36E-03	2.42E-09	3.29E-12	0.03%
F3110_F3100	1.00E-05	8.00E-10	8.00E-15	0.00%
F3110_F3130	1.63E-06	7.36E-09	1.20E-14	0.00%
F3110_F3270	3.66E-06	3.52E-08	1.29E-13	0.00%
F3110_F3301	3.66E-06	4.00E-08	1.46E-13	0.00%
F3110_F3302	1.63E-06	3.41E-08	5.56E-14	0.00%
F3120	1.27E-03	2.41E-09	3.06E-12	0.02%
F3120_F3101	9.42E-06	8.49E-10	8.00E-15	0.00%
F3120_F3140	1.53E-06	7.26E-09	1.11E-14	0.00%
F3120_F3270	1.53E-06	2.44E-08	3.74E-14	0.00%
F3130	1.27E-03	2.41E-09	3.06E-12	0.02%
F3130_F3100	1.53E-06	0.00E+00	0.00E+00	0.00%
F3130_F3101	9.42E-06	8.49E-10	8.00E-15	0.00%
F3130_F3110	1.53E-06	7.26E-09	1.11E-14	0.00%
F3130_F3270	3.44E-06	3.49E-08	1.20E-13	0.00%
F3130_F3302	3.44E-06	3.92E-08	1.35E-13	0.00%
F3140	1.27E-03	2.41E-09	3.06E-12	0.02%
F3140_F3100	9.42E-06	8.49E-10	8.00E-15	0.00%
F3140_F3120	1.53E-06	7.26E-09	1.11E-14	0.00%
F3140_F3270	1.53E-06	2.44E-08	3.74E-14	0.00%
F3150	3.29E-04	6.53E-07	2.15E-10	1.72%
F3150_F3100	3.95E-07	3.96E-07	1.56E-13	0.00%
F3150_F3301	2.44E-06	5.94E-05	1.45E-10	1.16%

Table 12.9-1

Full Power Core Damage Frequency Due to Internal Fires

Fire Scenarios (see note)	IE Frequency (/yr)	CCDP	Fire CDF (/yr)	% Fire CDF
F3150_F3302	3.95E-07	5.51E-05	2.18E-11	0.17%
F3270	2.59E-03	1.16E-07	3.00E-10	2.40%
F3301	4.42E-03	6.39E-08	2.83E-10	2.26%
F3301_F3100	3.27E-05	5.08E-08	1.66E-12	0.01%
F3301_F3101	1.19E-05	4.76E-08	5.66E-13	0.00%
F3301_F3110	5.30E-06	4.32E-08	2.29E-13	0.00%
F3301_F3130	5.30E-06	4.32E-08	2.29E-13	0.00%
F3301_F3150	3.27E-05	5.96E-05	1.95E-09	15.60%
F3301_F3270	5.30E-06	2.29E-06	1.21E-11	0.10%
F3302	5.19E-03	6.24E-08	3.24E-10	2.59%
F3302_F3100	3.84E-05	5.11E-08	1.96E-12	0.02%
F3302_F3110	6.23E-06	4.59E-08	2.86E-13	0.00%
F3302_F3130	6.23E-06	4.59E-08	2.86E-13	0.00%
F3302_F3270	6.23E-06	2.05E-06	1.28E-11	0.10%
F3302_F9150	6.23E-06	6.14E-05	3.83E-10	3.06%
F39151	6.78E-04	2.21E-09	1.50E-12	0.01%
F39161	6.78E-04	2.21E-09	1.50E-12	0.01%
F39252	5.45E-03	2.55E-09	1.39E-11	0.11%
F39253	4.64E-04	2.22E-09	1.03E-12	0.01%
F39262	5.44E-03	2.53E-09	1.38E-11	0.11%
F39263	4.64E-04	2.21E-09	1.03E-12	0.01%
F4197	4.59E-02	8.25E-09	3.79E-10	3.03%
F4197_F1770	5.51E-05	5.15E-09	2.84E-13	0.00%
F4197_F4250	3.40E-04	3.30E-08	1.12E-11	0.09%
F4197_F4260	3.40E-04	7.79E-09	2.65E-12	0.02%
F4197_F4302	3.40E-04	6.99E-09	2.38E-12	0.02%
F4197_F4303	3.40E-04	6.99E-09	2.38E-12	0.02%
F4197_F4403	5.51E-05	5.15E-09	2.84E-13	0.00%
F4197_F4550	3.40E-04	6.99E-09	2.38E-12	0.02%
F4197_F4560	3.40E-04	6.99E-09	2.38E-12	0.02%
F4250	3.08E-03	7.67E-09	2.36E-11	0.19%
F4260	3.17E-03	2.90E-09	9.19E-12	0.07%
F4271	2.36E-03	2.47E-09	5.83E-12	0.05%
F4272	2.36E-03	2.47E-09	5.83E-12	0.05%
F4273	2.36E-03	2.47E-09	5.83E-12	0.05%
F4302	2.26E-03	2.48E-09	5.61E-12	0.04%
F4303	2.26E-03	2.51E-09	5.66E-12	0.05%
F4403	1.06E-02	2.56E-09	2.71E-11	0.22%
F4403_F4197	7.82E-05	5.16E-09	4.04E-13	0.00%
F4550	1.07E-03	2.35E-09	2.51E-12	0.02%
F4560	1.15E-03	2.36E-09	2.71E-12	0.02%
F5100	2.30E-04	1.89E-09	4.35E-13	0.00%

Table 12.9-1

Full Power Core Damage Frequency Due to Internal Fires

Fire Scenarios (see note)	IE Frequency (/yr)	CCDP	Fire CDF (/yr)	% Fire CDF
F5151	5.52E-04	5.80E-09	3.20E-12	0.03%
F5151_F5100	4.08E-06	0.00E+00	0.00E+00	0.00%
F5151_F5201	6.62E-07	0.00E+00	0.00E+00	0.00%
F5153	8.70E-03	2.76E-09	2.40E-11	0.19%
F5153_F5100	1.04E-05	8.55E-10	8.89E-15	0.00%
F5153_F5203	1.04E-05	8.55E-10	8.89E-15	0.00%
F5153_F5250	1.04E-05	8.55E-10	8.89E-15	0.00%
F5154	3.28E-04	1.46E-08	4.78E-12	0.04%
F5154_F5100	3.93E-07	0.00E+00	0.00E+00	0.00%
F5154_F5164	3.93E-07	1.36E-08	5.34E-15	0.00%
F5154_F5205	3.93E-07	1.36E-08	5.34E-15	0.00%
F5157	2.36E-03	2.47E-09	5.83E-12	0.05%
F5158	2.36E-03	2.98E-09	7.04E-12	0.06%
F5161	5.52E-04	2.40E-09	1.33E-12	0.01%
F5163	8.70E-03	2.76E-09	2.40E-11	0.19%
F5163_F5100	1.04E-05	8.55E-10	8.89E-15	0.00%
F5163_F5205	1.04E-05	8.55E-10	8.89E-15	0.00%
F5163_F5260	1.04E-05	8.55E-10	8.89E-15	0.00%
F5164	3.44E-04	1.78E-08	6.14E-12	0.05%
F5164_F5100	4.13E-07	0.00E+00	0.00E+00	0.00%
F5164_F5154	4.13E-07	1.35E-08	5.56E-15	0.00%
F5167	2.36E-03	2.47E-09	5.83E-12	0.05%
F5168	2.36E-03	2.54E-09	5.99E-12	0.05%
F5201	9.04E-04	2.21E-09	2.00E-12	0.02%
F5201_F5100	6.69E-06	7.98E-10	5.34E-15	0.00%
F5201_F5151	1.09E-06	0.00E+00	0.00E+00	0.00%
F5201_F5202	6.69E-06	7.98E-10	5.34E-15	0.00%
F5201_F5350	1.09E-06	6.32E-08	6.89E-14	0.00%
F5202	2.25E-04	1.89E-09	4.26E-13	0.00%
F5202_F5100	1.67E-06	0.00E+00	0.00E+00	0.00%
F5202_F5201	1.67E-06	0.00E+00	0.00E+00	0.00%
F5202_F5203	1.67E-06	0.00E+00	0.00E+00	0.00%
F5202_F5350	2.71E-07	2.36E-07	6.40E-14	0.00%
F5203	2.26E-03	2.49E-09	5.63E-12	0.05%
F5203_F5100	1.67E-05	1.44E-09	2.40E-14	0.00%
F5203_F5153	2.71E-06	0.00E+00	0.00E+00	0.00%
F5203_F5202	1.67E-05	1.44E-09	2.40E-14	0.00%
F5203_F5250	2.71E-06	0.00E+00	0.00E+00	0.00%
F5203_F5350	2.71E-06	3.36E-07	9.11E-13	0.01%
F5204	9.04E-04	2.21E-09	2.00E-12	0.02%
F5204_F5100	6.69E-06	7.98E-10	5.34E-15	0.00%
F5204_F5161	1.09E-06	0.00E+00	0.00E+00	0.00%

Table 12.9-1

Full Power Core Damage Frequency Due to Internal Fires

Fire Scenarios (see note)	IE Frequency (/yr)	CCDP	Fire CDF (/yr)	% Fire CDF
F5204_F5205	6.69E-06	7.98E-10	5.34E-15	0.00%
F5204_F5360	1.09E-06	8.36E-09	9.11E-15	0.00%
F5205	2.63E-04	5.04E-09	1.33E-12	0.01%
F5205_F5100	1.94E-06	0.00E+00	0.00E+00	0.00%
F5205_F5161	3.15E-07	0.00E+00	0.00E+00	0.00%
F5205_F5163	3.15E-07	0.00E+00	0.00E+00	0.00%
F5205_F5204	1.94E-06	0.00E+00	0.00E+00	0.00%
F5205_F5260	3.15E-07	0.00E+00	0.00E+00	0.00%
F5205_F5360	3.15E-07	9.88E-09	3.11E-15	0.00%
F5250	1.90E-04	1.87E-09	3.55E-13	0.00%
F5250_F5153	2.28E-07	0.00E+00	0.00E+00	0.00%
F5250_F5203	2.28E-07	0.00E+00	0.00E+00	0.00%
F5251	2.75E-04	2.06E-09	5.68E-13	0.00%
F5260	1.90E-04	1.87E-09	3.55E-13	0.00%
F5260_F5163	2.28E-07	0.00E+00	0.00E+00	0.00%
F5260_F5205	2.28E-07	0.00E+00	0.00E+00	0.00%
F5261	2.75E-04	2.06E-09	5.68E-13	0.00%
F5350	6.63E-03	9.45E-08	6.26E-10	5.01%
F5350_F5100	4.91E-05	8.81E-08	4.33E-12	0.03%
F5350_F5201	7.96E-06	8.01E-08	6.38E-13	0.01%
F5350_F5202	7.96E-06	3.67E-07	2.93E-12	0.02%
F5350_F5203	7.96E-06	3.67E-07	2.93E-12	0.02%
F5350_F5450	1.79E-05	8.17E-08	1.46E-12	0.01%
F5360	6.54E-03	2.10E-08	1.38E-10	1.10%
F5360_F5100	4.84E-05	9.17E-08	4.44E-12	0.04%
F5360_F5204	7.84E-06	1.55E-08	1.21E-13	0.00%
F5360_F5205	7.84E-06	8.20E-08	6.43E-13	0.01%
F5360_F5460	1.77E-05	1.63E-08	2.89E-13	0.00%
F7100	5.08E-03	2.51E-09	1.28E-11	0.10%
F7300A	3.57E-03	4.06E-09	1.45E-11	0.12%
F7300A_F7300B	4.28E-06	6.57E-08	2.81E-13	0.00%
F7300B	3.48E-03	3.99E-09	1.39E-11	0.11%
F7300B_F7300A	4.18E-06	6.52E-08	2.73E-13	0.00%
F9150	1.04E-03	1.97E-06	2.05E-09	16.40%
F9150_F9160	1.25E-06	1.93E-04	2.41E-10	1.93%
F9160	1.17E-03	1.97E-06	2.30E-09	18.40%
F9160_F9150	1.41E-06	1.93E-04	2.73E-10	2.18%
FSWYD	1.80E-02	4.83E-08	8.70E-10	6.96%

Note: The fire scenarios named as “FXXXX_FYYYY” are postulated for fire propagation cases with “FXXXX” as the exposing fire area and “FYYYY” as the exposed fire area.

Table 12.9-2

Full Power Large Release Frequency Due to Internal Fires

Fire Scenarios (see note)	IE Frequency (/yr)	CLRP	Fire LRF (/yr)	% Fire LRF
F1110	3.56E-04	0.00E+00	0.00E+00	0.00%
F1120	3.80E-04	0.00E+00	0.00E+00	0.00%
F1130	2.57E-04	0.00E+00	0.00E+00	0.00%
F1140	2.57E-04	0.00E+00	0.00E+00	0.00%
F1150	3.12E-03	2.04E-11	6.36E-14	0.00%
F1152	4.10E-03	4.07E-10	1.67E-12	0.11%
F1160	2.55E-03	7.34E-12	1.87E-14	0.00%
F1162	3.77E-03	1.90E-10	7.18E-13	0.05%
F1203	2.34E-03	1.29E-11	3.03E-14	0.00%
F1210	5.18E-04	2.43E-10	1.26E-13	0.01%
F1210_F1150	1.40E-06	0.00E+00	0.00E+00	0.00%
F1210_F1230	3.83E-06	1.30E-07	4.98E-13	0.03%
F1210_F1240	3.83E-06	1.58E-08	6.07E-14	0.00%
F1210_F1311	6.22E-07	1.18E-08	7.33E-15	0.00%
F1220	6.05E-04	1.47E-08	8.89E-12	0.57%
F1220_F1162	1.63E-06	7.36E-09	1.20E-14	0.00%
F1220_F1203	7.26E-07	7.35E-09	5.34E-15	0.00%
F1220_F1230	4.48E-06	1.69E-08	7.58E-14	0.00%
F1220_F1240	4.48E-06	1.33E-07	5.96E-13	0.04%
F1220_F1321	7.26E-07	6.88E-07	4.99E-13	0.03%
F1230	4.07E-04	0.00E+00	0.00E+00	0.00%
F1230_F1152	1.10E-06	0.00E+00	0.00E+00	0.00%
F1230_F1210	3.01E-06	1.21E-07	3.63E-13	0.02%
F1230_F1220	3.01E-06	1.03E-08	3.09E-14	0.00%
F1230_F1262	4.89E-07	0.00E+00	0.00E+00	0.00%
F1230_F1331	4.89E-07	0.00E+00	0.00E+00	0.00%
F1240	4.07E-04	9.28E-12	3.78E-15	0.00%
F1240_F1160	1.10E-06	0.00E+00	0.00E+00	0.00%
F1240_F1210	3.01E-06	1.03E-08	3.09E-14	0.00%
F1240_F1220	3.01E-06	1.22E-07	3.67E-13	0.02%
F1240_F1341	4.89E-07	0.00E+00	0.00E+00	0.00%
F1262	2.66E-04	0.00E+00	0.00E+00	0.00%
F1311	2.58E-03	9.86E-09	2.54E-11	1.63%
F1311_F1150	6.97E-06	3.22E-08	2.25E-13	0.01%
F1311_F1210	3.10E-06	2.36E-08	7.32E-14	0.00%
F1311_F1331	1.91E-05	3.50E-07	6.69E-12	0.43%
F1311_F1341	1.91E-05	2.56E-07	4.88E-12	0.31%
F1321	2.49E-03	9.96E-09	2.48E-11	1.59%
F1321_F1162	6.71E-06	5.60E-08	3.76E-13	0.02%
F1321_F1203	1.84E-05	9.16E-09	1.68E-13	0.01%
F1321_F1220	2.98E-06	7.01E-07	2.09E-12	0.13%
F1321_F1341	1.84E-05	2.72E-07	5.01E-12	0.32%
F1331	2.60E-03	6.42E-11	1.67E-13	0.01%
F1331_F1152	7.03E-06	1.46E-07	1.02E-12	0.07%
F1331_F1203	1.93E-05	0.00E+00	0.00E+00	0.00%
F1331_F1230	3.12E-06	9.55E-09	2.98E-14	0.00%
F1331_F1311	1.93E-05	3.50E-07	6.75E-12	0.43%

Table 12.9-2

Full Power Large Release Frequency Due to Internal Fires

Fire Scenarios (see note)	IE Frequency (/yr)	CLRP	Fire LRF (/yr)	% Fire LRF
F1341	2.67E-03	1.60E-11	4.27E-14	0.00%
F1341_F1160	7.20E-06	0.00E+00	0.00E+00	0.00%
F1341_F1240	3.20E-06	0.00E+00	0.00E+00	0.00%
F1341_F1311	1.97E-05	2.56E-07	5.04E-12	0.32%
F1341_F1321	1.97E-05	2.74E-07	5.40E-12	0.35%
F1600	4.26E-04	0.00E+00	0.00E+00	0.00%
F1770	2.95E-04	0.00E+00	0.00E+00	0.00%
F19101	6.86E-04	0.00E+00	0.00E+00	0.00%
F19150	1.20E-03	0.00E+00	0.00E+00	0.00%
F19160	1.17E-03	4.24E-11	4.96E-14	0.00%
F19161	1.90E-04	0.00E+00	0.00E+00	0.00%
F2100	2.22E-03	1.23E-10	2.73E-13	0.02%
F3110	1.36E-03	0.00E+00	0.00E+00	0.00%
F3110_F3100	1.00E-05	0.00E+00	0.00E+00	0.00%
F3110_F3130	1.63E-06	0.00E+00	0.00E+00	0.00%
F3110_F3270	3.66E-06	1.53E-08	5.60E-14	0.00%
F3110_F3301	3.66E-06	1.18E-08	4.31E-14	0.00%
F3110_F3302	1.63E-06	7.09E-09	1.16E-14	0.00%
F3120	1.27E-03	0.00E+00	0.00E+00	0.00%
F3120_F3101	9.42E-06	0.00E+00	0.00E+00	0.00%
F3120_F3140	1.53E-06	0.00E+00	0.00E+00	0.00%
F3120_F3270	1.53E-06	8.14E-09	1.24E-14	0.00%
F3130	1.27E-03	0.00E+00	0.00E+00	0.00%
F3130_F3100	1.53E-06	0.00E+00	0.00E+00	0.00%
F3130_F3101	9.42E-06	0.00E+00	0.00E+00	0.00%
F3130_F3110	1.53E-06	0.00E+00	0.00E+00	0.00%
F3130_F3270	3.44E-06	1.49E-08	5.12E-14	0.00%
F3130_F3302	3.44E-06	1.16E-08	3.99E-14	0.00%
F3140	1.27E-03	0.00E+00	0.00E+00	0.00%
F3140_F3100	9.42E-06	0.00E+00	0.00E+00	0.00%
F3140_F3120	1.53E-06	0.00E+00	0.00E+00	0.00%
F3140_F3270	1.53E-06	8.14E-09	1.24E-14	0.00%
F3150	3.29E-04	3.02E-08	9.92E-12	0.64%
F3150_F3100	3.95E-07	7.86E-09	3.10E-15	0.00%
F3150_F3301	2.44E-06	2.12E-05	5.16E-11	3.31%
F3150_F3302	3.95E-07	2.11E-05	8.33E-12	0.53%
F3270	2.59E-03	8.01E-08	2.07E-10	13.30%
F3301	4.42E-03	1.71E-08	7.57E-11	4.85%
F3301_F3100	3.27E-05	1.51E-08	4.95E-13	0.03%
F3301_F3101	1.19E-05	1.46E-08	1.73E-13	0.01%
F3301_F3110	5.30E-06	1.33E-08	7.07E-14	0.00%
F3301_F3130	5.30E-06	1.33E-08	7.07E-14	0.00%
F3301_F3150	3.27E-05	2.12E-05	6.94E-10	44.50%
F3301_F3270	5.30E-06	8.01E-07	4.24E-12	0.27%
F3302	5.19E-03	1.71E-08	8.89E-11	5.70%
F3302_F3100	3.84E-05	1.53E-08	5.87E-13	0.04%
F3302_F3110	6.23E-06	1.62E-08	1.01E-13	0.01%
F3302_F3130	6.23E-06	1.62E-08	1.01E-13	0.01%

Table 12.9-2

Full Power Large Release Frequency Due to Internal Fires

Fire Scenarios (see note)	IE Frequency (/yr)	CLRP	Fire LRF (/yr)	% Fire LRF
F3302_F3270	6.23E-06	1.87E-06	1.17E-11	0.75%
F3302_F9150	6.23E-06	2.13E-05	1.32E-10	8.49%
F39151	6.78E-04	0.00E+00	0.00E+00	0.00%
F39161	6.78E-04	0.00E+00	0.00E+00	0.00%
F39252	5.45E-03	3.35E-12	1.83E-14	0.00%
F39253	4.64E-04	0.00E+00	0.00E+00	0.00%
F39262	5.44E-03	3.36E-12	1.83E-14	0.00%
F39263	4.64E-04	0.00E+00	0.00E+00	0.00%
F4197	4.59E-02	2.43E-11	1.11E-12	0.07%
F4197_F1770	5.51E-05	0.00E+00	0.00E+00	0.00%
F4197_F4250	3.40E-04	1.81E-10	6.16E-14	0.00%
F4197_F4260	3.40E-04	1.17E-10	3.99E-14	0.00%
F4197_F4302	3.40E-04	0.00E+00	0.00E+00	0.00%
F4197_F4303	3.40E-04	0.00E+00	0.00E+00	0.00%
F4197_F4403	5.51E-05	0.00E+00	0.00E+00	0.00%
F4197_F4550	3.40E-04	0.00E+00	0.00E+00	0.00%
F4197_F4560	3.40E-04	0.00E+00	0.00E+00	0.00%
F4250	3.08E-03	1.29E-10	3.96E-13	0.03%
F4260	3.17E-03	9.89E-12	3.14E-14	0.00%
F4271	2.36E-03	1.88E-12	4.45E-15	0.00%
F4272	2.36E-03	1.88E-12	4.45E-15	0.00%
F4273	2.36E-03	1.88E-12	4.45E-15	0.00%
F4302	2.26E-03	1.97E-12	4.45E-15	0.00%
F4303	2.26E-03	1.97E-12	4.45E-15	0.00%
F4403	1.06E-02	4.68E-12	4.96E-14	0.00%
F4403_F4197	7.82E-05	0.00E+00	0.00E+00	0.00%
F4550	1.07E-03	0.00E+00	0.00E+00	0.00%
F4560	1.15E-03	0.00E+00	0.00E+00	0.00%
F5100	2.30E-04	0.00E+00	0.00E+00	0.00%
F5151	5.52E-04	0.00E+00	0.00E+00	0.00%
F5151_F5100	4.08E-06	0.00E+00	0.00E+00	0.00%
F5151_F5201	6.62E-07	0.00E+00	0.00E+00	0.00%
F5153	8.70E-03	1.36E-11	1.18E-13	0.01%
F5153_F5100	1.04E-05	0.00E+00	0.00E+00	0.00%
F5153_F5203	1.04E-05	0.00E+00	0.00E+00	0.00%
F5153_F5250	1.04E-05	0.00E+00	0.00E+00	0.00%
F5154	3.28E-04	8.80E-12	2.89E-15	0.00%
F5154_F5100	3.93E-07	0.00E+00	0.00E+00	0.00%
F5154_F5164	3.93E-07	0.00E+00	0.00E+00	0.00%
F5154_F5205	3.93E-07	0.00E+00	0.00E+00	0.00%
F5157	2.36E-03	1.88E-12	4.45E-15	0.00%
F5158	2.36E-03	1.88E-12	4.45E-15	0.00%
F5161	5.52E-04	0.00E+00	0.00E+00	0.00%
F5163	8.70E-03	1.36E-11	1.18E-13	0.01%
F5163_F5100	1.04E-05	0.00E+00	0.00E+00	0.00%
F5163_F5205	1.04E-05	0.00E+00	0.00E+00	0.00%
F5163_F5260	1.04E-05	0.00E+00	0.00E+00	0.00%
F5164	3.44E-04	3.06E-09	1.05E-12	0.07%

Table 12.9-2

Full Power Large Release Frequency Due to Internal Fires

Fire Scenarios (see note)	IE Frequency (/yr)	CLRP	Fire LRF (/yr)	% Fire LRF
F5164_F5100	4.13E-07	0.00E+00	0.00E+00	0.00%
F5164_F5154	4.13E-07	0.00E+00	0.00E+00	0.00%
F5167	2.36E-03	1.88E-12	4.45E-15	0.00%
F5168	2.36E-03	1.88E-12	4.45E-15	0.00%
F5201	9.04E-04	0.00E+00	0.00E+00	0.00%
F5201_F5100	6.69E-06	0.00E+00	0.00E+00	0.00%
F5201_F5151	1.09E-06	0.00E+00	0.00E+00	0.00%
F5201_F5202	6.69E-06	0.00E+00	0.00E+00	0.00%
F5201_F5350	1.09E-06	0.00E+00	0.00E+00	0.00%
F5202	2.25E-04	0.00E+00	0.00E+00	0.00%
F5202_F5100	1.67E-06	0.00E+00	0.00E+00	0.00%
F5202_F5201	1.67E-06	0.00E+00	0.00E+00	0.00%
F5202_F5203	1.67E-06	0.00E+00	0.00E+00	0.00%
F5202_F5350	2.71E-07	0.00E+00	0.00E+00	0.00%
F5203	2.26E-03	1.97E-12	4.45E-15	0.00%
F5203_F5100	1.67E-05	0.00E+00	0.00E+00	0.00%
F5203_F5153	2.71E-06	0.00E+00	0.00E+00	0.00%
F5203_F5202	1.67E-05	0.00E+00	0.00E+00	0.00%
F5203_F5250	2.71E-06	0.00E+00	0.00E+00	0.00%
F5203_F5350	2.71E-06	0.00E+00	0.00E+00	0.00%
F5204	9.04E-04	0.00E+00	0.00E+00	0.00%
F5204_F5100	6.69E-06	0.00E+00	0.00E+00	0.00%
F5204_F5161	1.09E-06	0.00E+00	0.00E+00	0.00%
F5204_F5205	6.69E-06	0.00E+00	0.00E+00	0.00%
F5204_F5360	1.09E-06	1.02E-09	1.11E-15	0.00%
F5205	2.63E-04	0.00E+00	0.00E+00	0.00%
F5205_F5100	1.94E-06	0.00E+00	0.00E+00	0.00%
F5205_F5161	3.15E-07	0.00E+00	0.00E+00	0.00%
F5205_F5163	3.15E-07	0.00E+00	0.00E+00	0.00%
F5205_F5204	1.94E-06	0.00E+00	0.00E+00	0.00%
F5205_F5260	3.15E-07	0.00E+00	0.00E+00	0.00%
F5205_F5360	3.15E-07	0.00E+00	0.00E+00	0.00%
F5250	1.90E-04	0.00E+00	0.00E+00	0.00%
F5250_F5153	2.28E-07	0.00E+00	0.00E+00	0.00%
F5250_F5203	2.28E-07	0.00E+00	0.00E+00	0.00%
F5251	2.75E-04	0.00E+00	0.00E+00	0.00%
F5260	1.90E-04	0.00E+00	0.00E+00	0.00%
F5260_F5163	2.28E-07	0.00E+00	0.00E+00	0.00%
F5260_F5205	2.28E-07	0.00E+00	0.00E+00	0.00%
F5261	2.75E-04	0.00E+00	0.00E+00	0.00%
F5350	6.63E-03	2.45E-10	1.62E-12	0.10%
F5350_F5100	4.91E-05	0.00E+00	0.00E+00	0.00%
F5350_F5201	7.96E-06	0.00E+00	0.00E+00	0.00%
F5350_F5202	7.96E-06	0.00E+00	0.00E+00	0.00%
F5350_F5203	7.96E-06	0.00E+00	0.00E+00	0.00%
F5350_F5450	1.79E-05	0.00E+00	0.00E+00	0.00%
F5360	6.54E-03	3.32E-09	2.17E-11	1.39%
F5360_F5100	4.84E-05	2.78E-09	1.34E-13	0.01%

Table 12.9-2

Full Power Large Release Frequency Due to Internal Fires

Fire Scenarios (see note)	IE Frequency (/yr)	CLRP	Fire LRF (/yr)	% Fire LRF
F5360_F5204	7.84E-06	1.98E-09	1.56E-14	0.00%
F5360_F5205	7.84E-06	1.98E-09	1.56E-14	0.00%
F5360_F5460	1.77E-05	2.36E-09	4.18E-14	0.00%
F7100	5.08E-03	3.32E-12	1.68E-14	0.00%
F7300A	3.57E-03	2.96E-11	1.06E-13	0.01%
F7300A_F7300B	4.28E-06	1.04E-09	4.45E-15	0.00%
F7300B	3.48E-03	2.85E-11	9.91E-14	0.01%
F7300B_F7300A	4.18E-06	9.55E-10	3.99E-15	0.00%
F9150	1.04E-03	1.29E-08	1.34E-11	0.86%
F9150_F9160	1.25E-06	2.18E-05	2.73E-11	1.75%
F9160	1.17E-03	2.52E-08	2.95E-11	1.89%
F9160_F9150	1.41E-06	2.19E-05	3.09E-11	1.98%
FSWYD	1.80E-02	2.50E-09	4.51E-11	2.89%

Notes:

(1) The fire scenarios named as “FXXXX_FYYYY” are postulated for fire propagation cases with “FXXXX” as the exposing fire area and “FYYYY” as the exposed fire area.

(2) The LRF results here do not include the 1-day of CDF/LRF due to de-inerted operation; this contribution is added during post-processing of the results.

Table 12.9-3

Shutdown Core Damage Frequency Due to Internal Fires

Fire Scenarios	IE Frequency (/yr)	CCDP	Fire CDF (/yr)	% Fire CDF
F1152_F1162_M5	6.72E-06	1.89E-05	1.27E-10	1.33%
F1152_F1162_M5O	1.68E-06	6.03E-05	1.01E-10	1.06%
F1152_F1162_M6U	2.10E-06	3.61E-05	7.58E-11	0.79%
F3301_F3302_M5	1.69E-07	1.48E-05	2.49E-12	0.03%
F3301_F3302_M5O	4.22E-08	5.28E-05	2.23E-12	0.02%
F3301_F3302_M6U	5.27E-08	3.16E-05	1.66E-12	0.02%
F4197_M5	1.97E-03	1.08E-06	2.13E-09	22.30%
F4197_M5O	4.93E-04	3.64E-06	1.80E-09	18.80%
F4197_M6U	6.16E-04	1.71E-06	1.05E-09	11.00%
F4250_F4260_M5	3.65E-06	1.54E-05	5.64E-11	0.59%
F4250_F4260_M5O	9.12E-07	5.61E-05	5.11E-11	0.54%
F4250_F4260_M6U	1.14E-06	3.34E-05	3.81E-11	0.40%
F4550_F4560_M5	3.65E-06	7.83E-07	2.86E-12	0.03%
F4550_F4560_M5O	9.12E-07	2.44E-06	2.23E-12	0.02%
F4550_F4560_M6U	1.14E-06	1.27E-06	1.45E-12	0.02%
F5350_F5360_M5	6.27E-08	2.29E-05	1.43E-12	0.02%
F5350_F5360_M5O	1.57E-08	1.08E-04	1.69E-12	0.02%
F5350_F5360_M6U	1.96E-08	8.14E-05	1.60E-12	0.02%
F7300A_F7300B_M5	5.27E-07	1.50E-05	7.91E-12	0.08%
F7300A_F7300B_M5O	1.32E-07	5.50E-05	7.25E-12	0.08%
F7300A_F7300B_M6U	1.65E-07	3.30E-05	5.44E-12	0.06%
F9150_F9160_M5	2.10E-08	2.03E-05	4.27E-13	0.00%
F9150_F9160_M5O	5.26E-09	9.23E-05	4.85E-13	0.01%
F9150_F9160_M6U	6.58E-09	7.32E-05	4.82E-13	0.01%
FSWYD_M5	5.70E-04	2.41E-06	1.38E-09	14.40%
FSWYD_M5O	1.42E-04	1.03E-05	1.46E-09	15.30%
FSWYD_M6U	1.78E-04	7.25E-06	1.29E-09	13.50%

Notes:

1. Shutdown fire scenario for turbine building general area (F4197) is conservatively assumed. If the cabling for instrument air system is designed with separation criteria, this fire scenario should be screened.

Table 12.9-4

Cutset Report (Top 200) for Full-Power Core Damage Frequencies Due to Internal Fires

#	Cutset Prob	Event Prob	Event	Description
1	6.45E-10	2.58E-03	%F1311	
		2.50E-07	C12-ROD-CF-SCRAM	CCF OF CONTROL RODS TO INSERT
2	6.22E-10	2.49E-03	%F1321	
		2.50E-07	C12-ROD-CF-SCRAM	CCF OF CONTROL RODS TO INSERT
3	3.27E-10	3.27E-05	%F3301_F3150	
		1.00E-04	C71-CCFSOFTWARE	RPS COMMON CAUSE SOFTWARE FAILURE
		1.00E-01	C71-XHE-FO-SCRAM	OPERATOR FAILS TO PERFORM MANUAL SCRAM
4	2.92E-10	1.17E-03	%F9160	
		2.50E-07	C12-ROD-CF-SCRAM	CCF OF CONTROL RODS TO INSERT
5	2.60E-10	1.04E-03	%F9150	
		2.50E-07	C12-ROD-CF-SCRAM	CCF OF CONTROL RODS TO INSERT
6	1.58E-10	3.27E-05	%F3301_F3150	
		4.84E-02	C12-BV_-RE-F013B	MISPOSITION OF VALVE F013B
		1.00E-04	C63-CCFSOFTWARE	Common cause failure of software
7	1.58E-10	3.27E-05	%F3301_F3150	
		4.84E-02	C12-BV_-RE-F015B	MISPOSITION OF VALVE F015B
		1.00E-04	C63-CCFSOFTWARE	Common cause failure of software
8	1.47E-10	3.27E-05	%F3301_F3150	
		4.50E-05	C71-SLU-FC-R_ALL	CCF of all components in group 'C71-SLU-FC-R'
		1.00E-01	C71-XHE-FO-SCRAM	OPERATOR FAILS TO PERFORM MANUAL SCRAM
9	1.41E-10	1.41E-06	%F9160_F9150	
		1.00E-04	C63-CCFSOFTWARE	Common cause failure of software
10	1.25E-10	1.25E-06	%F9150_F9160	
		1.00E-04	C63-CCFSOFTWARE	Common cause failure of software
11	1.00E-10	6.23E-06	%F3302_F9150	
		1.00E-04	C63-CCFSOFTWARE	Common cause failure of software
		1.61E-01	XXX-XHE-FO-DEPRESS	OPERATOR FAILS TO RECOGNIZE NEED OF DEPRESSURIZATION

Table 12.9-4

Cutset Report (Top 200) for Full-Power Core Damage Frequencies Due to Internal Fires

#	Cutset Prob	Event Prob	Event	Description
12	9.81E-11	3.27E-05	%F3301_F3150	
		3.00E-05	C71-DTM-FC-R_ALL	CCF of all components in group 'C71-DTM-FC-R'
		1.00E-01	C71-XHE-FO-SCRAM	OPERATOR FAILS TO PERFORM MANUAL SCRAM
13	8.22E-11	3.29E-04	%F3150	
		2.50E-07	C12-ROD-CF-SCRAM	CCF OF CONTROL RODS TO INSERT
14	6.63E-11	6.63E-03	%F5350	
		1.00E-04	C63-CCFSOFTWARE	Common cause failure of software
		1.00E-04	C72-CCFSOFTWARE	COMMON CAUSE FAILURE OF DPS PROCESSORS
15	6.23E-11	6.23E-06	%F3302_F9150	
		1.00E-04	C71-CCFSOFTWARE	RPS COMMON CAUSE SOFTWARE FAILURE
		1.00E-01	C71-XHE-FO-SCRAM	OPERATOR FAILS TO PERFORM MANUAL SCRAM
16	5.89E-11	3.27E-05	%F3301_F3150	
		1.80E-05	C71-OLU-FC-R_ALL	CCF of all components in group 'C71-OLU-FC-R'
		1.00E-01	C71-XHE-FO-SCRAM	OPERATOR FAILS TO PERFORM MANUAL SCRAM
17	5.65E-11	1.17E-03	%F9160	
		3.00E-03	B21-SQV-CC-F004A	EXPLOSIVE VALVE DPV F004A FAILS TO OPERATE
		1.00E-04	C63-CCFSOFTWARE	Common cause failure of software
		1.61E-01	XXX-XHE-FO-LPMAKEUP	OP. FAILS TO RECOG. NEED FOR LOW PRESS. MAKEUP AFTER DEPRESSURIZATION
18	5.65E-11	1.17E-03	%F9160	
		3.00E-03	B21-SQV-CC-F004A	EXPLOSIVE VALVE DPV F004A FAILS TO OPERATE
		1.00E-04	C63-CCFSOFTWARE	Common cause failure of software
		1.61E-01	XXX-XHE-FO-DEPRESS	OPERATOR FAILS TO RECOGNIZE NEED OF DEPRESSURIZATION
19	5.65E-11	1.17E-03	%F9160	
		3.00E-03	B21-SQV-CC-F004C	EXPLOSIVE VALVE DPV C FAILS TO OPERATE
		1.00E-04	C63-CCFSOFTWARE	Common cause failure of software
		1.61E-01	XXX-XHE-FO-LPMAKEUP	OP. FAILS TO RECOG. NEED FOR LOW PRESS. MAKEUP AFTER DEPRESSURIZATION

Table 12.9-4

Cutset Report (Top 200) for Full-Power Core Damage Frequencies Due to Internal Fires

#	Cutset Prob	Event Prob	Event	Description
20	5.65E-11	1.17E-03	%F9160	
		3.00E-03	B21-SQV-CC-F004C	EXPLOSIVE VALVE DPV C FAILS TO OPERATE
		1.00E-04	C63-CCFSOFTWARE	Common cause failure of software
		1.61E-01	XXX-XHE-FO-DEPRESS	OPERATOR FAILS TO RECOGNIZE NEED OF DEPRESSURIZATION
21	5.65E-11	1.17E-03	%F9160	
		3.00E-03	B21-SQV-CC-F004E	EXPLOSIVE VALVE DPV E FAILS TO OPERATE
		1.00E-04	C63-CCFSOFTWARE	Common cause failure of software
		1.61E-01	XXX-XHE-FO-LPMAKEUP	OP. FAILS TO RECOG. NEED FOR LOW PRESS. MAKEUP AFTER DEPRESSURIZATION
22	5.65E-11	1.17E-03	%F9160	
		3.00E-03	B21-SQV-CC-F004E	EXPLOSIVE VALVE DPV E FAILS TO OPERATE
		1.00E-04	C63-CCFSOFTWARE	Common cause failure of software
		1.61E-01	XXX-XHE-FO-DEPRESS	OPERATOR FAILS TO RECOGNIZE NEED OF DEPRESSURIZATION
23	5.65E-11	1.17E-03	%F9160	
		3.00E-03	B21-SQV-CC-F004G	EXPLOSIVE VALVE DPV G FAILS TO OPERATE
		1.00E-04	C63-CCFSOFTWARE	Common cause failure of software
		1.61E-01	XXX-XHE-FO-LPMAKEUP	OP. FAILS TO RECOG. NEED FOR LOW PRESS. MAKEUP AFTER DEPRESSURIZATION
24	5.65E-11	1.17E-03	%F9160	
		3.00E-03	B21-SQV-CC-F004G	EXPLOSIVE VALVE DPV G FAILS TO OPERATE
		1.00E-04	C63-CCFSOFTWARE	Common cause failure of software
		1.61E-01	XXX-XHE-FO-DEPRESS	OPERATOR FAILS TO RECOGNIZE NEED OF DEPRESSURIZATION
25	5.56E-11	3.27E-05	%F3301_F3150	
		1.70E-06	C12-SOV-FD-SCRV139	CCF TO OPEN (VENT) 0F SCRAM PILOT SOLENOID VALVES SOV-139

Table 12.9-4

Cutset Report (Top 200) for Full-Power Core Damage Frequencies Due to Internal Fires

#	Cutset Prob	Event Prob	Event	Description
26	5.02E-11	1.04E-03	%F9150	
		3.00E-03	B21-SQV-CC-F004B	EXPLOSIVE VALVE DPV B FAILS TO OPERATE
		1.00E-04	C63-CCFSOFTWARE	Common cause failure of software
		1.61E-01	XXX-XHE-FO-LPMAKEUP	OP. FAILS TO RECOG. NEED FOR LOW PRESS. MAKEUP AFTER DEPRESSURIZATION
27	5.02E-11	1.04E-03	%F9150	
		3.00E-03	B21-SQV-CC-F004B	EXPLOSIVE VALVE DPV B FAILS TO OPERATE
		1.00E-04	C63-CCFSOFTWARE	Common cause failure of software
		1.61E-01	XXX-XHE-FO-DEPRESS	OPERATOR FAILS TO RECOGNIZE NEED OF DEPRESSURIZATION
28	5.02E-11	1.04E-03	%F9150	
		3.00E-03	B21-SQV-CC-F004D	EXPLOSIVE VALVE DPV D FAILS TO OPERATE
		1.00E-04	C63-CCFSOFTWARE	Common cause failure of software
		1.61E-01	XXX-XHE-FO-LPMAKEUP	OP. FAILS TO RECOG. NEED FOR LOW PRESS. MAKEUP AFTER DEPRESSURIZATION
29	5.02E-11	1.04E-03	%F9150	
		3.00E-03	B21-SQV-CC-F004D	EXPLOSIVE VALVE DPV D FAILS TO OPERATE
		1.00E-04	C63-CCFSOFTWARE	Common cause failure of software
		1.61E-01	XXX-XHE-FO-DEPRESS	OPERATOR FAILS TO RECOGNIZE NEED OF DEPRESSURIZATION
30	5.02E-11	1.04E-03	%F9150	
		3.00E-03	B21-SQV-CC-F004F	EXPLOSIVE VALVE DPV F FAILS TO OPERATE
		1.00E-04	C63-CCFSOFTWARE	Common cause failure of software
		1.61E-01	XXX-XHE-FO-LPMAKEUP	OP. FAILS TO RECOG. NEED FOR LOW PRESS. MAKEUP AFTER DEPRESSURIZATION
31	5.02E-11	1.04E-03	%F9150	
		3.00E-03	B21-SQV-CC-F004F	EXPLOSIVE VALVE DPV F FAILS TO OPERATE
		1.00E-04	C63-CCFSOFTWARE	Common cause failure of software
		1.61E-01	XXX-XHE-FO-DEPRESS	OPERATOR FAILS TO RECOGNIZE NEED OF DEPRESSURIZATION

Table 12.9-4

Cutset Report (Top 200) for Full-Power Core Damage Frequencies Due to Internal Fires

#	Cutset Prob	Event Prob	Event	Description
32	5.02E-11	1.04E-03	%F9150	
		3.00E-03	B21-SQV-CC-F004H	EXPLOSIVE VALVE DPV H FAILS TO OPERATE
		1.00E-04	C63-CCFSOFTWARE	Common cause failure of software
		1.61E-01	XXX-XHE-FO-LPMAKEUP	OP. FAILS TO RECOG. NEED FOR LOW PRESS. MAKEUP AFTER DEPRESSURIZATION
33	5.02E-11	1.04E-03	%F9150	
		3.00E-03	B21-SQV-CC-F004H	EXPLOSIVE VALVE DPV H FAILS TO OPERATE
		1.00E-04	C63-CCFSOFTWARE	Common cause failure of software
		1.61E-01	XXX-XHE-FO-DEPRESS	OPERATOR FAILS TO RECOGNIZE NEED OF DEPRESSURIZATION
34	4.75E-11	3.27E-05	%F3301_F3150	
		4.84E-02	C12-BV_-RE-F013B	MISPOSITION OF VALVE F013B
		3.00E-05	C63-DTM-FC-ESFLG_ALL	CCF of all components in group 'C63-DTM-FC-ESFLG'
35	4.75E-11	3.27E-05	%F3301_F3150	
		4.84E-02	C12-BV_-RE-F015B	MISPOSITION OF VALVE F015B
		3.00E-05	C63-DTM-FC-ESFLG_ALL	CCF of all components in group 'C63-DTM-FC-ESFLG'
36	4.23E-11	1.41E-06	%F9160_F9150	
		3.00E-05	C63-DTM-FC-ESFLG_ALL	CCF of all components in group 'C63-DTM-FC-ESFLG'
37	3.96E-11	3.27E-05	%F3301_F3150	
		1.21E-02	C12-BV_-RE-F003B	MISPOSITION OF VALVE F003B
		1.00E-04	C63-CCFSOFTWARE	Common cause failure of software
38	3.96E-11	3.27E-05	%F3301_F3150	
		1.21E-02	C12-BV_-RE-F018B	MISPOSITION OF VALVE FO18B
		1.00E-04	C63-CCFSOFTWARE	Common cause failure of software
39	3.96E-11	3.27E-05	%F3301_F3150	
		1.21E-02	C12-BV_-RE-F021B	MISPOSITION OF VALVE F021B
		1.00E-04	C63-CCFSOFTWARE	Common cause failure of software
40	3.75E-11	1.25E-06	%F9150_F9160	
		3.00E-05	C63-DTM-FC-ESFLG_ALL	CCF of all components in group 'C63-DTM-FC-ESFLG'

Table 12.9-4

Cutset Report (Top 200) for Full-Power Core Damage Frequencies Due to Internal Fires

#	Cutset Prob	Event Prob	Event	Description
41	3.01E-11	6.23E-06	%F3302_F9150	
		3.00E-05	C63-DTM-FC-ESFLG_ALL	CCF of all components in group 'C63-DTM-FC-ESFLG'
		1.61E-01	XXX-XHE-FO-DEPRESS	OPERATOR FAILS TO RECOGNIZE NEED OF DEPRESSURIZATION
42	2.85E-11	3.27E-05	%F3301_F3150	
		4.84E-02	C12-BV_-RE-F013B	MISPOSITION OF VALVE F013B
		1.80E-05	C63-LOG-FC-ESFLG_ALL	CCF of all components in group 'C63-LOG-FC-ESFLG'
43	2.85E-11	3.27E-05	%F3301_F3150	
		4.84E-02	C12-BV_-RE-F015B	MISPOSITION OF VALVE F015B
		1.80E-05	C63-LOG-FC-ESFLG_ALL	CCF of all components in group 'C63-LOG-FC-ESFLG'
44	2.80E-11	6.23E-06	%F3302_F9150	
		4.50E-05	C71-SLU-FC-R_ALL	CCF of all components in group 'C71-SLU-FC-R'
		1.00E-01	C71-XHE-FO-SCRAM	OPERATOR FAILS TO PERFORM MANUAL SCRAM
45	2.64E-11	3.27E-05	%F3301_F3150	
		1.00E-04	C63-CCFSOFTWARE	Common cause failure of software
		8.07E-03	P41-TRN-RE-PUMP2B	FAILURE TO RESTORE PSW PUMP 2B
46	2.54E-11	1.41E-06	%F9160_F9150	
		1.80E-05	C63-LOG-FC-ESFLG_ALL	CCF of all components in group 'C63-LOG-FC-ESFLG'
47	2.44E-11	2.44E-06	%F3150_F3301	
		1.00E-04	C71-CCFSOFTWARE	RPS COMMON CAUSE SOFTWARE FAILURE
		1.00E-01	C71-XHE-FO-SCRAM	OPERATOR FAILS TO PERFORM MANUAL SCRAM
48	2.25E-11	1.25E-06	%F9150_F9160	
		1.80E-05	C63-LOG-FC-ESFLG_ALL	CCF of all components in group 'C63-LOG-FC-ESFLG'
49	2.06E-11	1.17E-03	%F9160	
		1.00E-04	C63-CCFSOFTWARE	Common cause failure of software
		1.09E-03	C72-LDD-FC-S1F004A	F004A FIRST SERIES LOAD DRIVER FAILS ACTUATE
		1.61E-01	XXX-XHE-FO-LPMAKEUP	OP. FAILS TO RECOG. NEED FOR LOW PRESS. MAKEUP AFTER DEPRESSURIZATION

Table 12.9-4

Cutset Report (Top 200) for Full-Power Core Damage Frequencies Due to Internal Fires

#	Cutset Prob	Event Prob	Event	Description
50	2.06E-11	1.17E-03	%F9160	
		1.00E-04	C63-CCFSOFTWARE	Common cause failure of software
		1.09E-03	C72-LDD-FC-S1F004A	F004A FIRST SERIES LOAD DRIVER FAILS ACTUATE
		1.61E-01	XXX-XHE-FO-DEPRESS	OPERATOR FAILS TO RECOGNIZE NEED OF DEPRESSURIZATION
51	2.06E-11	1.17E-03	%F9160	
		1.00E-04	C63-CCFSOFTWARE	Common cause failure of software
		1.09E-03	C72-LDD-FC-S1F004C	F004C FIRST SERIES LOAD DRIVER FAILS ACTUATE
		1.61E-01	XXX-XHE-FO-LPMAKEUP	OP. FAILS TO RECOG. NEED FOR LOW PRESS. MAKEUP AFTER DEPRESSURIZATION
52	2.06E-11	1.17E-03	%F9160	
		1.00E-04	C63-CCFSOFTWARE	Common cause failure of software
		1.09E-03	C72-LDD-FC-S1F004C	F004C FIRST SERIES LOAD DRIVER FAILS ACTUATE
		1.61E-01	XXX-XHE-FO-DEPRESS	OPERATOR FAILS TO RECOGNIZE NEED OF DEPRESSURIZATION
53	2.06E-11	1.17E-03	%F9160	
		1.00E-04	C63-CCFSOFTWARE	Common cause failure of software
		1.09E-03	C72-LDD-FC-S1F004E	F004E FIRST SERIES LOAD DRIVER FAILS ACTUATE
		1.61E-01	XXX-XHE-FO-LPMAKEUP	OP. FAILS TO RECOG. NEED FOR LOW PRESS. MAKEUP AFTER DEPRESSURIZATION
54	2.06E-11	1.17E-03	%F9160	
		1.00E-04	C63-CCFSOFTWARE	Common cause failure of software
		1.09E-03	C72-LDD-FC-S1F004E	F004E FIRST SERIES LOAD DRIVER FAILS ACTUATE
		1.61E-01	XXX-XHE-FO-DEPRESS	OPERATOR FAILS TO RECOGNIZE NEED OF DEPRESSURIZATION
55	2.06E-11	1.17E-03	%F9160	
		1.00E-04	C63-CCFSOFTWARE	Common cause failure of software
		1.09E-03	C72-LDD-FC-S1F004G	F004G FIRST SERIES LOAD DRIVER FAILS ACTUATE
		1.61E-01	XXX-XHE-FO-LPMAKEUP	OP. FAILS TO RECOG. NEED FOR LOW PRESS. MAKEUP AFTER DEPRESSURIZATION

Table 12.9-4

Cutset Report (Top 200) for Full-Power Core Damage Frequencies Due to Internal Fires

#	Cutset Prob	Event Prob	Event	Description
56	2.06E-11	1.17E-03	%F9160	
		1.00E-04	C63-CCFSOFTWARE	Common cause failure of software
		1.09E-03	C72-LDD-FC-S1F004G	F004G FIRST SERIES LOAD DRIVER FAILS ACTUATE
		1.61E-01	XXX-XHE-FO-DEPRESS	OPERATOR FAILS TO RECOGNIZE NEED OF DEPRESSURIZATION
57	2.06E-11	1.17E-03	%F9160	
		1.00E-04	C63-CCFSOFTWARE	Common cause failure of software
		1.09E-03	C72-LDD-FC-S2F004A	F004A SECOND SERIES LOAD DRIVER FAILS TO ACTUATE
		1.61E-01	XXX-XHE-FO-LPMAKEUP	OP. FAILS TO RECOG. NEED FOR LOW PRESS. MAKEUP AFTER DEPRESSURIZATION
58	2.06E-11	1.17E-03	%F9160	
		1.00E-04	C63-CCFSOFTWARE	Common cause failure of software
		1.09E-03	C72-LDD-FC-S2F004A	F004A SECOND SERIES LOAD DRIVER FAILS TO ACTUATE
		1.61E-01	XXX-XHE-FO-DEPRESS	OPERATOR FAILS TO RECOGNIZE NEED OF DEPRESSURIZATION
59	2.06E-11	1.17E-03	%F9160	
		1.00E-04	C63-CCFSOFTWARE	Common cause failure of software
		1.09E-03	C72-LDD-FC-S2F004C	F004C SECOND SERIES LOAD DRIVER FAILS TO ACTUATE
		1.61E-01	XXX-XHE-FO-LPMAKEUP	OP. FAILS TO RECOG. NEED FOR LOW PRESS. MAKEUP AFTER DEPRESSURIZATION
60	2.06E-11	1.17E-03	%F9160	
		1.00E-04	C63-CCFSOFTWARE	Common cause failure of software
		1.09E-03	C72-LDD-FC-S2F004C	F004C SECOND SERIES LOAD DRIVER FAILS TO ACTUATE
		1.61E-01	XXX-XHE-FO-DEPRESS	OPERATOR FAILS TO RECOGNIZE NEED OF DEPRESSURIZATION
61	2.06E-11	1.17E-03	%F9160	
		1.00E-04	C63-CCFSOFTWARE	Common cause failure of software
		1.09E-03	C72-LDD-FC-S2F004E	F004E SECOND SERIES LOAD DRIVER FAILS TO ACTUATE
		1.61E-01	XXX-XHE-FO-LPMAKEUP	OP. FAILS TO RECOG. NEED FOR LOW PRESS. MAKEUP AFTER DEPRESSURIZATION

Table 12.9-4

Cutset Report (Top 200) for Full-Power Core Damage Frequencies Due to Internal Fires

#	Cutset Prob	Event Prob	Event	Description
62	2.06E-11	1.17E-03	%F9160	
		1.00E-04	C63-CCFSOFTWARE	Common cause failure of software
		1.09E-03	C72-LDD-FC-S2F004E	F004E SECOND SERIES LOAD DRIVER FAILS TO ACTUATE
		1.61E-01	XXX-XHE-FO-DEPRESS	OPERATOR FAILS TO RECOGNIZE NEED OF DEPRESSURIZATION
63	2.06E-11	1.17E-03	%F9160	
		1.00E-04	C63-CCFSOFTWARE	Common cause failure of software
		1.09E-03	C72-LDD-FC-S2F004G	F004G SECOND SERIES LOAD DRIVER FAILS TO ACTUATE
		1.61E-01	XXX-XHE-FO-LPMAKEUP	OP. FAILS TO RECOG. NEED FOR LOW PRESS. MAKEUP AFTER DEPRESSURIZATION
64	2.06E-11	1.17E-03	%F9160	
		1.00E-04	C63-CCFSOFTWARE	Common cause failure of software
		1.09E-03	C72-LDD-FC-S2F004G	F004G SECOND SERIES LOAD DRIVER FAILS TO ACTUATE
		1.61E-01	XXX-XHE-FO-DEPRESS	OPERATOR FAILS TO RECOGNIZE NEED OF DEPRESSURIZATION
65	2.06E-11	1.17E-03	%F9160	
		1.00E-04	C63-CCFSOFTWARE	Common cause failure of software
		1.09E-03	C72-LDD-FC-S3F004A	F004A THIRD SERIES LOAD DRIVER FAILS TO ACTUATE
		1.61E-01	XXX-XHE-FO-LPMAKEUP	OP. FAILS TO RECOG. NEED FOR LOW PRESS. MAKEUP AFTER DEPRESSURIZATION
66	2.06E-11	1.17E-03	%F9160	
		1.00E-04	C63-CCFSOFTWARE	Common cause failure of software
		1.09E-03	C72-LDD-FC-S3F004A	F004A THIRD SERIES LOAD DRIVER FAILS TO ACTUATE
		1.61E-01	XXX-XHE-FO-DEPRESS	OPERATOR FAILS TO RECOGNIZE NEED OF DEPRESSURIZATION
67	2.06E-11	1.17E-03	%F9160	
		1.00E-04	C63-CCFSOFTWARE	Common cause failure of software
		1.09E-03	C72-LDD-FC-S3F004C	F004C THIRD SERIES LOAD DRIVER FAILS TO ACTUATE
		1.61E-01	XXX-XHE-FO-LPMAKEUP	OP. FAILS TO RECOG. NEED FOR LOW PRESS. MAKEUP AFTER DEPRESSURIZATION

Table 12.9-4

Cutset Report (Top 200) for Full-Power Core Damage Frequencies Due to Internal Fires

#	Cutset Prob	Event Prob	Event	Description
68	2.06E-11	1.17E-03	%F9160	
		1.00E-04	C63-CCFSOFTWARE	Common cause failure of software
		1.09E-03	C72-LDD-FC-S3F004C	F004C THIRD SERIES LOAD DRIVER FAILS TO ACTUATE
		1.61E-01	XXX-XHE-FO-DEPRESS	OPERATOR FAILS TO RECOGNIZE NEED OF DEPRESSURIZATION
69	2.06E-11	1.17E-03	%F9160	
		1.00E-04	C63-CCFSOFTWARE	Common cause failure of software
		1.09E-03	C72-LDD-FC-S3F004E	F004E THIRD SERIES LOAD DRIVER FAILS TO ACTUATE
		1.61E-01	XXX-XHE-FO-LPMAKEUP	OP. FAILS TO RECOG. NEED FOR LOW PRESS. MAKEUP AFTER DEPRESSURIZATION
70	2.06E-11	1.17E-03	%F9160	
		1.00E-04	C63-CCFSOFTWARE	Common cause failure of software
		1.09E-03	C72-LDD-FC-S3F004E	F004E THIRD SERIES LOAD DRIVER FAILS TO ACTUATE
		1.61E-01	XXX-XHE-FO-DEPRESS	OPERATOR FAILS TO RECOGNIZE NEED OF DEPRESSURIZATION
71	2.06E-11	1.17E-03	%F9160	
		1.00E-04	C63-CCFSOFTWARE	Common cause failure of software
		1.09E-03	C72-LDD-FC-S3F004G	F004G THIRD SERIES LOAD DRIVER FAILS TO ACTUATE
		1.61E-01	XXX-XHE-FO-LPMAKEUP	OP. FAILS TO RECOG. NEED FOR LOW PRESS. MAKEUP AFTER DEPRESSURIZATION
72	2.06E-11	1.17E-03	%F9160	
		1.00E-04	C63-CCFSOFTWARE	Common cause failure of software
		1.09E-03	C72-LDD-FC-S3F004G	F004G THIRD SERIES LOAD DRIVER FAILS TO ACTUATE
		1.61E-01	XXX-XHE-FO-DEPRESS	OPERATOR FAILS TO RECOGNIZE NEED OF DEPRESSURIZATION
73	1.99E-11	6.63E-03	%F5350	
		3.00E-05	C63-DTM-FC-ESFLG_ALL	CCF of all components in group 'C63-DTM-FC-ESFLG'
		1.00E-04	C72-CCFSOFTWARE	COMMON CAUSE FAILURE OF DPS PROCESSORS
74	1.96E-11	3.27E-05	%F3301_F3150	
		1.00E-04	C63-CCFSOFTWARE	Common cause failure of software
		6.00E-03	P21-AHU-FS-RCCWB	AIR HANDLING UNIT RCCWS ROOM B FAILS TO START

Table 12.9-4

Cutset Report (Top 200) for Full-Power Core Damage Frequencies Due to Internal Fires

#	Cutset Prob	Event Prob	Event	Description
75	1.90E-11	1.04E-03	%F9150	
		1.14E-05	R13-INV-FC-CCFSR_ALL	CCF of all components in group 'R13-INV-FC-CCFSR'
		1.00E+00	XHOS72H	HOUSE EVENT: 72 HOURS (VALUE =1)
		1.61E-03	XXX-XHE-FO-ICPCCS	Operator fails to recognize the need to makeup ICS/PCCS Pool level.
76	1.87E-11	6.23E-06	%F3302_F9150	
		3.00E-05	C71-DTM-FC-R_ALL	CCF of all components in group 'C71-DTM-FC-R'
		1.00E-01	C71-XHE-FO-SCRAM	OPERATOR FAILS TO PERFORM MANUAL SCRAM
77	1.83E-11	1.04E-03	%F9150	
		1.00E-04	C63-CCFSOFTWARE	Common cause failure of software
		1.09E-03	C72-LDD-FC-S1F004B	F004B FIRST SERIES LOAD DRIVER FAILS ACTUATE
		1.61E-01	XXX-XHE-FO-LPMAKEUP	OP. FAILS TO RECOG. NEED FOR LOW PRESS. MAKEUP AFTER DEPRESSURIZATION
78	1.83E-11	1.04E-03	%F9150	
		1.00E-04	C63-CCFSOFTWARE	Common cause failure of software
		1.09E-03	C72-LDD-FC-S1F004B	F004B FIRST SERIES LOAD DRIVER FAILS ACTUATE
		1.61E-01	XXX-XHE-FO-DEPRESS	OPERATOR FAILS TO RECOGNIZE NEED OF DEPRESSURIZATION
79	1.83E-11	1.04E-03	%F9150	
		1.00E-04	C63-CCFSOFTWARE	Common cause failure of software
		1.09E-03	C72-LDD-FC-S1F004D	F004D FIRST SERIES LOAD DRIVER FAILS ACTUATE
		1.61E-01	XXX-XHE-FO-LPMAKEUP	OP. FAILS TO RECOG. NEED FOR LOW PRESS. MAKEUP AFTER DEPRESSURIZATION
80	1.83E-11	1.04E-03	%F9150	
		1.00E-04	C63-CCFSOFTWARE	Common cause failure of software
		1.09E-03	C72-LDD-FC-S1F004D	F004D FIRST SERIES LOAD DRIVER FAILS ACTUATE
		1.61E-01	XXX-XHE-FO-DEPRESS	OPERATOR FAILS TO RECOGNIZE NEED OF DEPRESSURIZATION

Table 12.9-4

Cutset Report (Top 200) for Full-Power Core Damage Frequencies Due to Internal Fires

#	Cutset Prob	Event Prob	Event	Description
81	1.83E-11	1.04E-03	%F9150	
		1.00E-04	C63-CCFSOFTWARE	Common cause failure of software
		1.09E-03	C72-LDD-FC-S1F004F	F004F FIRST SERIES LOAD DRIVER FAILS ACTUATE
		1.61E-01	XXX-XHE-FO-LPMAKEUP	OP. FAILS TO RECOG. NEED FOR LOW PRESS. MAKEUP AFTER DEPRESSURIZATION
82	1.83E-11	1.04E-03	%F9150	
		1.00E-04	C63-CCFSOFTWARE	Common cause failure of software
		1.09E-03	C72-LDD-FC-S1F004F	F004F FIRST SERIES LOAD DRIVER FAILS ACTUATE
		1.61E-01	XXX-XHE-FO-DEPRESS	OPERATOR FAILS TO RECOGNIZE NEED OF DEPRESSURIZATION
83	1.83E-11	1.04E-03	%F9150	
		1.00E-04	C63-CCFSOFTWARE	Common cause failure of software
		1.09E-03	C72-LDD-FC-S1F004H	F004H FIRST SERIES LOAD DRIVER FAILS ACTUATE
		1.61E-01	XXX-XHE-FO-LPMAKEUP	OP. FAILS TO RECOG. NEED FOR LOW PRESS. MAKEUP AFTER DEPRESSURIZATION
84	1.83E-11	1.04E-03	%F9150	
		1.00E-04	C63-CCFSOFTWARE	Common cause failure of software
		1.09E-03	C72-LDD-FC-S1F004H	F004H FIRST SERIES LOAD DRIVER FAILS ACTUATE
		1.61E-01	XXX-XHE-FO-DEPRESS	OPERATOR FAILS TO RECOGNIZE NEED OF DEPRESSURIZATION
85	1.83E-11	1.04E-03	%F9150	
		1.00E-04	C63-CCFSOFTWARE	Common cause failure of software
		1.09E-03	C72-LDD-FC-S2F004B	F004B SECOND SERIES LOAD DRIVER FAILS TO ACTUATE
		1.61E-01	XXX-XHE-FO-LPMAKEUP	OP. FAILS TO RECOG. NEED FOR LOW PRESS. MAKEUP AFTER DEPRESSURIZATION
86	1.83E-11	1.04E-03	%F9150	
		1.00E-04	C63-CCFSOFTWARE	Common cause failure of software
		1.09E-03	C72-LDD-FC-S2F004B	F004B SECOND SERIES LOAD DRIVER FAILS TO ACTUATE
		1.61E-01	XXX-XHE-FO-DEPRESS	OPERATOR FAILS TO RECOGNIZE NEED OF DEPRESSURIZATION

Table 12.9-4

Cutset Report (Top 200) for Full-Power Core Damage Frequencies Due to Internal Fires

#	Cutset Prob	Event Prob	Event	Description
87	1.83E-11	1.04E-03	%F9150	
		1.00E-04	C63-CCFSOFTWARE	Common cause failure of software
		1.09E-03	C72-LDD-FC-S2F004D	F004D SECOND SERIES LOAD DRIVER FAILS TO ACTUATE
		1.61E-01	XXX-XHE-FO-LPMAKEUP	OP. FAILS TO RECOG. NEED FOR LOW PRESS. MAKEUP AFTER DEPRESSURIZATION
88	1.83E-11	1.04E-03	%F9150	
		1.00E-04	C63-CCFSOFTWARE	Common cause failure of software
		1.09E-03	C72-LDD-FC-S2F004D	F004D SECOND SERIES LOAD DRIVER FAILS TO ACTUATE
		1.61E-01	XXX-XHE-FO-DEPRESS	OPERATOR FAILS TO RECOGNIZE NEED OF DEPRESSURIZATION
89	1.83E-11	1.04E-03	%F9150	
		1.00E-04	C63-CCFSOFTWARE	Common cause failure of software
		1.09E-03	C72-LDD-FC-S2F004F	F004F SECOND SERIES LOAD DRIVER FAILS TO ACTUATE
		1.61E-01	XXX-XHE-FO-LPMAKEUP	OP. FAILS TO RECOG. NEED FOR LOW PRESS. MAKEUP AFTER DEPRESSURIZATION
90	1.83E-11	1.04E-03	%F9150	
		1.00E-04	C63-CCFSOFTWARE	Common cause failure of software
		1.09E-03	C72-LDD-FC-S2F004F	F004F SECOND SERIES LOAD DRIVER FAILS TO ACTUATE
		1.61E-01	XXX-XHE-FO-DEPRESS	OPERATOR FAILS TO RECOGNIZE NEED OF DEPRESSURIZATION
91	1.83E-11	1.04E-03	%F9150	
		1.00E-04	C63-CCFSOFTWARE	Common cause failure of software
		1.09E-03	C72-LDD-FC-S2F004H	F004H SECOND SERIES LOAD DRIVER FAILS TO ACTUATE
		1.61E-01	XXX-XHE-FO-LPMAKEUP	OP. FAILS TO RECOG. NEED FOR LOW PRESS. MAKEUP AFTER DEPRESSURIZATION
92	1.83E-11	1.04E-03	%F9150	
		1.00E-04	C63-CCFSOFTWARE	Common cause failure of software
		1.09E-03	C72-LDD-FC-S2F004H	F004H SECOND SERIES LOAD DRIVER FAILS TO ACTUATE
		1.61E-01	XXX-XHE-FO-DEPRESS	OPERATOR FAILS TO RECOGNIZE NEED OF DEPRESSURIZATION

Table 12.9-4

Cutset Report (Top 200) for Full-Power Core Damage Frequencies Due to Internal Fires

#	Cutset Prob	Event Prob	Event	Description
93	1.83E-11	1.04E-03	%F9150	
		1.00E-04	C63-CCFSOFTWARE	Common cause failure of software
		1.09E-03	C72-LDD-FC-S3F004B	F004B THIRD SERIES LOAD DRIVER FAILS TO ACTUATE
		1.61E-01	XXX-XHE-FO-LPMAKEUP	OP. FAILS TO RECOG. NEED FOR LOW PRESS. MAKEUP AFTER DEPRESSURIZATION
94	1.83E-11	1.04E-03	%F9150	
		1.00E-04	C63-CCFSOFTWARE	Common cause failure of software
		1.09E-03	C72-LDD-FC-S3F004B	F004B THIRD SERIES LOAD DRIVER FAILS TO ACTUATE
		1.61E-01	XXX-XHE-FO-DEPRESS	OPERATOR FAILS TO RECOGNIZE NEED OF DEPRESSURIZATION
95	1.83E-11	1.04E-03	%F9150	
		1.00E-04	C63-CCFSOFTWARE	Common cause failure of software
		1.09E-03	C72-LDD-FC-S3F004D	F004D THIRD SERIES LOAD DRIVER FAILS TO ACTUATE
		1.61E-01	XXX-XHE-FO-LPMAKEUP	OP. FAILS TO RECOG. NEED FOR LOW PRESS. MAKEUP AFTER DEPRESSURIZATION
96	1.83E-11	1.04E-03	%F9150	
		1.00E-04	C63-CCFSOFTWARE	Common cause failure of software
		1.09E-03	C72-LDD-FC-S3F004D	F004D THIRD SERIES LOAD DRIVER FAILS TO ACTUATE
		1.61E-01	XXX-XHE-FO-DEPRESS	OPERATOR FAILS TO RECOGNIZE NEED OF DEPRESSURIZATION
97	1.83E-11	1.04E-03	%F9150	
		1.00E-04	C63-CCFSOFTWARE	Common cause failure of software
		1.09E-03	C72-LDD-FC-S3F004F	F004F THIRD SERIES LOAD DRIVER FAILS TO ACTUATE
		1.61E-01	XXX-XHE-FO-LPMAKEUP	OP. FAILS TO RECOG. NEED FOR LOW PRESS. MAKEUP AFTER DEPRESSURIZATION
98	1.83E-11	1.04E-03	%F9150	
		1.00E-04	C63-CCFSOFTWARE	Common cause failure of software
		1.09E-03	C72-LDD-FC-S3F004F	F004F THIRD SERIES LOAD DRIVER FAILS TO ACTUATE
		1.61E-01	XXX-XHE-FO-DEPRESS	OPERATOR FAILS TO RECOGNIZE NEED OF DEPRESSURIZATION

Table 12.9-4

Cutset Report (Top 200) for Full-Power Core Damage Frequencies Due to Internal Fires

#	Cutset Prob	Event Prob	Event	Description
99	1.83E-11	1.04E-03	%F9150	
		1.00E-04	C63-CCFSOFTWARE	Common cause failure of software
		1.09E-03	C72-LDD-FC-S3F004H	F004H THIRD SERIES LOAD DRIVER FAILS TO ACTUATE
		1.61E-01	XXX-XHE-FO-LPMAKEUP	OP. FAILS TO RECOG. NEED FOR LOW PRESS. MAKEUP AFTER DEPRESSURIZATION
100	1.83E-11	1.04E-03	%F9150	
		1.00E-04	C63-CCFSOFTWARE	Common cause failure of software
		1.09E-03	C72-LDD-FC-S3F004H	F004H THIRD SERIES LOAD DRIVER FAILS TO ACTUATE
		1.61E-01	XXX-XHE-FO-DEPRESS	OPERATOR FAILS TO RECOGNIZE NEED OF DEPRESSURIZATION
101	1.81E-11	6.23E-06	%F3302_F9150	
		1.80E-05	C63-LOG-FC-ESFLG_ALL	CCF of all components in group 'C63-LOG-FC-ESFLG'
		1.61E-01	XXX-XHE-FO-DEPRESS	OPERATOR FAILS TO RECOGNIZE NEED OF DEPRESSURIZATION
102	1.70E-11	1.17E-03	%F9160	
		3.00E-03	B21-SQV-CC-F004A	EXPLOSIVE VALVE DPV F004A FAILS TO OPERATE
		3.00E-05	C63-DTM-FC-ESFLG_ALL	CCF of all components in group 'C63-DTM-FC-ESFLG'
		1.61E-01	XXX-XHE-FO-LPMAKEUP	OP. FAILS TO RECOG. NEED FOR LOW PRESS. MAKEUP AFTER DEPRESSURIZATION
103	1.70E-11	1.17E-03	%F9160	
		3.00E-03	B21-SQV-CC-F004A	EXPLOSIVE VALVE DPV F004A FAILS TO OPERATE
		3.00E-05	C63-DTM-FC-ESFLG_ALL	CCF of all components in group 'C63-DTM-FC-ESFLG'
		1.61E-01	XXX-XHE-FO-DEPRESS	OPERATOR FAILS TO RECOGNIZE NEED OF DEPRESSURIZATION
104	1.70E-11	1.17E-03	%F9160	
		3.00E-03	B21-SQV-CC-F004C	EXPLOSIVE VALVE DPV C FAILS TO OPERATE
		3.00E-05	C63-DTM-FC-ESFLG_ALL	CCF of all components in group 'C63-DTM-FC-ESFLG'
		1.61E-01	XXX-XHE-FO-LPMAKEUP	OP. FAILS TO RECOG. NEED FOR LOW PRESS. MAKEUP AFTER DEPRESSURIZATION

Table 12.9-4

Cutset Report (Top 200) for Full-Power Core Damage Frequencies Due to Internal Fires

#	Cutset Prob	Event Prob	Event	Description
105	1.70E-11	1.17E-03	%F9160	
		3.00E-03	B21-SQV-CC-F004C	EXPLOSIVE VALVE DPV C FAILS TO OPERATE
		3.00E-05	C63-DTM-FC-ESFLG_ALL	CCF of all components in group 'C63-DTM-FC-ESFLG'
		1.61E-01	XXX-XHE-FO-DEPRESS	OPERATOR FAILS TO RECOGNIZE NEED OF DEPRESSURIZATION
106	1.70E-11	1.17E-03	%F9160	
		3.00E-03	B21-SQV-CC-F004E	EXPLOSIVE VALVE DPV E FAILS TO OPERATE
		3.00E-05	C63-DTM-FC-ESFLG_ALL	CCF of all components in group 'C63-DTM-FC-ESFLG'
		1.61E-01	XXX-XHE-FO-LPMAKEUP	OP. FAILS TO RECOG. NEED FOR LOW PRESS. MAKEUP AFTER DEPRESSURIZATION
107	1.70E-11	1.17E-03	%F9160	
		3.00E-03	B21-SQV-CC-F004E	EXPLOSIVE VALVE DPV E FAILS TO OPERATE
		3.00E-05	C63-DTM-FC-ESFLG_ALL	CCF of all components in group 'C63-DTM-FC-ESFLG'
		1.61E-01	XXX-XHE-FO-DEPRESS	OPERATOR FAILS TO RECOGNIZE NEED OF DEPRESSURIZATION
108	1.70E-11	1.17E-03	%F9160	
		3.00E-03	B21-SQV-CC-F004G	EXPLOSIVE VALVE DPV G FAILS TO OPERATE
		3.00E-05	C63-DTM-FC-ESFLG_ALL	CCF of all components in group 'C63-DTM-FC-ESFLG'
		1.61E-01	XXX-XHE-FO-LPMAKEUP	OP. FAILS TO RECOG. NEED FOR LOW PRESS. MAKEUP AFTER DEPRESSURIZATION
109	1.70E-11	1.17E-03	%F9160	
		3.00E-03	B21-SQV-CC-F004G	EXPLOSIVE VALVE DPV G FAILS TO OPERATE
		3.00E-05	C63-DTM-FC-ESFLG_ALL	CCF of all components in group 'C63-DTM-FC-ESFLG'
		1.61E-01	XXX-XHE-FO-DEPRESS	OPERATOR FAILS TO RECOGNIZE NEED OF DEPRESSURIZATION
110	1.60E-11	6.63E-03	%F5350	
		1.50E-04	B21-SQV-CC_ALL	CCF of all components in group 'B21-SQV-CC'
		1.00E+00	B32-NONCONDENSE	Non condensable gasses form in ICS sufficiently to require venting
		1.00E-04	C63-CCFSOFTWARE	Common cause failure of software
		1.61E-01	XXX-XHE-FO-LPMAKEUP	OP. FAILS TO RECOG. NEED FOR LOW PRESS. MAKEUP AFTER DEPRESSURIZATION

Table 12.9-4

Cutset Report (Top 200) for Full-Power Core Damage Frequencies Due to Internal Fires

#	Cutset Prob	Event Prob	Event	Description
111	1.60E-11	6.63E-03	%F5350	
		1.50E-04	B21-SQV-CC_ALL	CCF of all components in group 'B21-SQV-CC'
		1.00E+00	B32-NONCONDENSE	Non condensable gasses form in ICS sufficiently to require venting
		1.00E-04	C63-CCFSOFTWARE	Common cause failure of software
		1.61E-01	XXX-XHE-FO-DEPRESS	OPERATOR FAILS TO RECOGNIZE NEED OF DEPRESSURIZATION
112	1.60E-11	6.63E-03	%F5350	
		1.50E-04	B21-SQV-CC_ALL	CCF of all components in group 'B21-SQV-CC'
		1.00E-04	C63-CCFSOFTWARE_S	ESF SPURIOUS COMMON CAUSE SOFTWARE FAILURE
		1.61E-01	XXX-XHE-FO-LPMAKEUP	OP. FAILS TO RECOG. NEED FOR LOW PRESS. MAKEUP AFTER DEPRESSURIZATION
113	1.60E-11	6.63E-03	%F5350	
		1.50E-04	B21-SQV-CC_ALL	CCF of all components in group 'B21-SQV-CC'
		1.00E-04	C63-CCFSOFTWARE_S	ESF SPURIOUS COMMON CAUSE SOFTWARE FAILURE
		1.61E-01	XXX-XHE-FO-DEPRESS	OPERATOR FAILS TO RECOGNIZE NEED OF DEPRESSURIZATION
114	1.60E-11	6.63E-03	%F5350	
		1.00E+00	B32-NONCONDENSE	Non condensable gasses form in ICS sufficiently to require venting
		1.00E-04	C63-CCFSOFTWARE	Common cause failure of software
		1.50E-04	E50-SQV-CC-INJ_ALL	CCF of all components in group 'E50-SQV-CC-INJ'
		1.61E-01	XXX-XHE-FO-DEPRESS	OPERATOR FAILS TO RECOGNIZE NEED OF DEPRESSURIZATION
115	1.60E-11	6.63E-03	%F5350	
		1.00E-04	C63-CCFSOFTWARE_S	ESF SPURIOUS COMMON CAUSE SOFTWARE FAILURE
		1.50E-04	E50-SQV-CC-INJ_ALL	CCF of all components in group 'E50-SQV-CC-INJ'
		1.61E-01	XXX-XHE-FO-DEPRESS	OPERATOR FAILS TO RECOGNIZE NEED OF DEPRESSURIZATION

Table 12.9-4

Cutset Report (Top 200) for Full-Power Core Damage Frequencies Due to Internal Fires

#	Cutset Prob	Event Prob	Event	Description
116	1.58E-11	6.54E-03	%F5360	
		1.50E-04	B21-SQV-CC_ALL	CCF of all components in group 'B21-SQV-CC'
		1.00E-04	C63-CCFSOFTWARE_S	ESF SPURIOUS COMMON CAUSE SOFTWARE FAILURE
		1.61E-01	XXX-XHE-FO-LPMAKEUP	OP. FAILS TO RECOG. NEED FOR LOW PRESS. MAKEUP AFTER DEPRESSURIZATION
117	1.58E-11	6.54E-03	%F5360	
		1.50E-04	B21-SQV-CC_ALL	CCF of all components in group 'B21-SQV-CC'
		1.00E-04	C63-CCFSOFTWARE_S	ESF SPURIOUS COMMON CAUSE SOFTWARE FAILURE
		1.61E-01	XXX-XHE-FO-DEPRESS	OPERATOR FAILS TO RECOGNIZE NEED OF DEPRESSURIZATION
118	1.58E-11	6.54E-03	%F5360	
		1.00E-04	C63-CCFSOFTWARE_S	ESF SPURIOUS COMMON CAUSE SOFTWARE FAILURE
		1.50E-04	E50-SQV-CC-INJ_ALL	CCF of all components in group 'E50-SQV-CC-INJ'
		1.61E-01	XXX-XHE-FO-DEPRESS	OPERATOR FAILS TO RECOGNIZE NEED OF DEPRESSURIZATION
119	1.51E-11	1.04E-03	%F9150	
		3.00E-03	B21-SQV-CC-F004B	EXPLOSIVE VALVE DPV B FAILS TO OPERATE
		3.00E-05	C63-DTM-FC-ESFLG_ALL	CCF of all components in group 'C63-DTM-FC-ESFLG'
		1.61E-01	XXX-XHE-FO-LPMAKEUP	OP. FAILS TO RECOG. NEED FOR LOW PRESS. MAKEUP AFTER DEPRESSURIZATION
120	1.51E-11	1.04E-03	%F9150	
		3.00E-03	B21-SQV-CC-F004B	EXPLOSIVE VALVE DPV B FAILS TO OPERATE
		3.00E-05	C63-DTM-FC-ESFLG_ALL	CCF of all components in group 'C63-DTM-FC-ESFLG'
		1.61E-01	XXX-XHE-FO-DEPRESS	OPERATOR FAILS TO RECOGNIZE NEED OF DEPRESSURIZATION
121	1.51E-11	1.04E-03	%F9150	
		3.00E-03	B21-SQV-CC-F004D	EXPLOSIVE VALVE DPV D FAILS TO OPERATE
		3.00E-05	C63-DTM-FC-ESFLG_ALL	CCF of all components in group 'C63-DTM-FC-ESFLG'
		1.61E-01	XXX-XHE-FO-LPMAKEUP	OP. FAILS TO RECOG. NEED FOR LOW PRESS. MAKEUP AFTER DEPRESSURIZATION

Table 12.9-4

Cutset Report (Top 200) for Full-Power Core Damage Frequencies Due to Internal Fires

#	Cutset Prob	Event Prob	Event	Description
122	1.51E-11	1.04E-03	%F9150	
		3.00E-03	B21-SQV-CC-F004D	EXPLOSIVE VALVE DPV D FAILS TO OPERATE
		3.00E-05	C63-DTM-FC-ESFLG_ALL	CCF of all components in group 'C63-DTM-FC-ESFLG'
		1.61E-01	XXX-XHE-FO-DEPRESS	OPERATOR FAILS TO RECOGNIZE NEED OF DEPRESSURIZATION
123	1.51E-11	1.04E-03	%F9150	
		3.00E-03	B21-SQV-CC-F004F	EXPLOSIVE VALVE DPV F FAILS TO OPERATE
		3.00E-05	C63-DTM-FC-ESFLG_ALL	CCF of all components in group 'C63-DTM-FC-ESFLG'
		1.61E-01	XXX-XHE-FO-LPMAKEUP	OP. FAILS TO RECOG. NEED FOR LOW PRESS. MAKEUP AFTER DEPRESSURIZATION
124	1.51E-11	1.04E-03	%F9150	
		3.00E-03	B21-SQV-CC-F004F	EXPLOSIVE VALVE DPV F FAILS TO OPERATE
		3.00E-05	C63-DTM-FC-ESFLG_ALL	CCF of all components in group 'C63-DTM-FC-ESFLG'
		1.61E-01	XXX-XHE-FO-DEPRESS	OPERATOR FAILS TO RECOGNIZE NEED OF DEPRESSURIZATION
125	1.51E-11	1.04E-03	%F9150	
		3.00E-03	B21-SQV-CC-F004H	EXPLOSIVE VALVE DPV H FAILS TO OPERATE
		3.00E-05	C63-DTM-FC-ESFLG_ALL	CCF of all components in group 'C63-DTM-FC-ESFLG'
		1.61E-01	XXX-XHE-FO-LPMAKEUP	OP. FAILS TO RECOG. NEED FOR LOW PRESS. MAKEUP AFTER DEPRESSURIZATION
126	1.51E-11	1.04E-03	%F9150	
		3.00E-03	B21-SQV-CC-F004H	EXPLOSIVE VALVE DPV H FAILS TO OPERATE
		3.00E-05	C63-DTM-FC-ESFLG_ALL	CCF of all components in group 'C63-DTM-FC-ESFLG'
		1.61E-01	XXX-XHE-FO-DEPRESS	OPERATOR FAILS TO RECOGNIZE NEED OF DEPRESSURIZATION
127	1.41E-11	1.41E-06	%F9160_F9150	
		1.00E-04	C71-CCFSOFTWARE	RPS COMMON CAUSE SOFTWARE FAILURE
		1.00E-01	C71-XHE-FO-SCRAM	OPERATOR FAILS TO PERFORM MANUAL SCRAM
128	1.31E-11	3.27E-05	%F3301_F3150	
		4.00E-03	C12-MOV-CC-F014B	MOTOR OPER. VALVE F014B FAILS TO OPEN
		1.00E-04	C63-CCFSOFTWARE	Common cause failure of software

Table 12.9-4

Cutset Report (Top 200) for Full-Power Core Damage Frequencies Due to Internal Fires

#	Cutset Prob	Event Prob	Event	Description
129	1.31E-11	3.27E-05	%F3301_F3150	
		4.00E-03	C12-MOV-CC-F020B	MOTOR OPER. VALVE F020B FAILS TO OPEN
		1.00E-04	C63-CCFSOFTWARE	Common cause failure of software
130	1.31E-11	3.27E-05	%F3301_F3150	
		4.00E-03	C12-MOV-CC-F023	MOTOR OPERATED VALVE F023 FAILS TO OPEN
		1.00E-04	C63-CCFSOFTWARE	Common cause failure of software
131	1.31E-11	3.27E-05	%F3301_F3150	
		4.00E-03	C12-MOV-OO-F024	MOTOR OPERATED VALVE F024 FAILS TO CLOSE
		1.00E-04	C63-CCFSOFTWARE	Common cause failure of software
132	1.31E-11	3.27E-05	%F3301_F3150	
		4.00E-03	C12-MOV-OO-F062A	MOTOR OPERATED VALVE F062A FAILS TO CLOSE
		1.00E-04	C63-CCFSOFTWARE	Common cause failure of software
133	1.31E-11	3.27E-05	%F3301_F3150	
		4.00E-03	C12-MOV-OO-F062B	MOTOR OPERATED VALVE F062B FAILS TO CLOSE
		1.00E-04	C63-CCFSOFTWARE	Common cause failure of software
134	1.31E-11	3.27E-05	%F3301_F3150	
		1.00E-04	C63-CCFSOFTWARE	Common cause failure of software
		4.00E-03	P41-MOV-CC-PMPF004B	MOTOR OPERATED VALVE F004B FAILS TO OPEN
135	1.25E-11	1.25E-06	%F9150_F9160	
		1.00E-04	C71-CCFSOFTWARE	RPS COMMON CAUSE SOFTWARE FAILURE
		1.00E-01	C71-XHE-FO-SCRAM	OPERATOR FAILS TO PERFORM MANUAL SCRAM
136	1.19E-11	6.63E-03	%F5350	
		1.80E-05	C63-LOG-FC-ESFLG_ALL	CCF of all components in group 'C63-LOG-FC-ESFLG'
		1.00E-04	C72-CCFSOFTWARE	COMMON CAUSE FAILURE OF DPS PROCESSORS
137	1.19E-11	3.27E-05	%F3301_F3150	
		1.21E-02	C12-BV_-RE-F003B	MISPOSITION OF VALVE F003B
		3.00E-05	C63-DTM-FC-ESFLG_ALL	CCF of all components in group 'C63-DTM-FC-ESFLG'
138	1.19E-11	3.27E-05	%F3301_F3150	
		1.21E-02	C12-BV_-RE-F018B	MISPOSITION OF VALVE FO18B
		3.00E-05	C63-DTM-FC-ESFLG_ALL	CCF of all components in group 'C63-DTM-FC-ESFLG'

Table 12.9-4

Cutset Report (Top 200) for Full-Power Core Damage Frequencies Due to Internal Fires

#	Cutset Prob	Event Prob	Event	Description
139	1.19E-11	3.27E-05	%F3301_F3150	
		1.21E-02	C12-BV_-RE-F021B	MISPOSITION OF VALVE F021B
		3.00E-05	C63-DTM-FC-ESFLG_ALL	CCF of all components in group 'C63-DTM-FC-ESFLG'
140	1.18E-11	2.44E-06	%F3150_F3301	
		4.84E-02	C12-BV_-RE-F013B	MISPOSITION OF VALVE F013B
		1.00E-04	C63-CCFSOFTWARE	Common cause failure of software
141	1.18E-11	2.44E-06	%F3150_F3301	
		4.84E-02	C12-BV_-RE-F015B	MISPOSITION OF VALVE F015B
		1.00E-04	C63-CCFSOFTWARE	Common cause failure of software
142	1.18E-11	3.27E-05	%F3301_F3150	
		3.60E-06	C63-LT_-NO-RPSRX_ALL	CCF of all components in group 'C63-LT_-NO-RPSRX'
		1.00E-01	C71-XHE-FO-SCRAM	OPERATOR FAILS TO PERFORM MANUAL SCRAM
143	1.17E-11	1.17E-03	%F9160	
		1.00E-04	C63-CCFSOFTWARE	Common cause failure of software
		1.00E-04	C72-CCFSOFTWARE	COMMON CAUSE FAILURE OF DPS PROCESSORS
144	1.12E-11	6.23E-06	%F3302_F9150	
		1.80E-05	C71-OLU-FC-R_ALL	CCF of all components in group 'C71-OLU-FC-R'
		1.00E-01	C71-XHE-FO-SCRAM	OPERATOR FAILS TO PERFORM MANUAL SCRAM
145	1.10E-11	2.44E-06	%F3150_F3301	
		4.50E-05	C71-SLU-FC-R_ALL	CCF of all components in group 'C71-SLU-FC-R'
		1.00E-01	C71-XHE-FO-SCRAM	OPERATOR FAILS TO PERFORM MANUAL SCRAM
146	1.06E-11	6.23E-06	%F3302_F9150	
		1.70E-06	C12-SOV-FD-SCRV139	CCF TO OPEN (VENT) 0F SCRAM PILOT SOLENOID VALVES SOV-139
147	1.04E-11	1.04E-03	%F9150	
		1.00E-04	C63-CCFSOFTWARE	Common cause failure of software
		1.00E-04	C72-CCFSOFTWARE	COMMON CAUSE FAILURE OF DPS PROCESSORS

Table 12.9-4

Cutset Report (Top 200) for Full-Power Core Damage Frequencies Due to Internal Fires

#	Cutset Prob	Event Prob	Event	Description
148	1.02E-11	1.17E-03	%F9160	
		3.00E-03	B21-SQV-CC-F004A	EXPLOSIVE VALVE DPV F004A FAILS TO OPERATE
		1.80E-05	C63-LOG-FC-ESFLG_ALL	CCF of all components in group 'C63-LOG-FC-ESFLG'
		1.61E-01	XXX-XHE-FO-LPMAKEUP	OP. FAILS TO RECOG. NEED FOR LOW PRESS. MAKEUP AFTER DEPRESSURIZATION
149	1.02E-11	1.17E-03	%F9160	
		3.00E-03	B21-SQV-CC-F004A	EXPLOSIVE VALVE DPV F004A FAILS TO OPERATE
		1.80E-05	C63-LOG-FC-ESFLG_ALL	CCF of all components in group 'C63-LOG-FC-ESFLG'
		1.61E-01	XXX-XHE-FO-DEPRESS	OPERATOR FAILS TO RECOGNIZE NEED OF DEPRESSURIZATION
150	1.02E-11	1.17E-03	%F9160	
		3.00E-03	B21-SQV-CC-F004C	EXPLOSIVE VALVE DPV C FAILS TO OPERATE
		1.80E-05	C63-LOG-FC-ESFLG_ALL	CCF of all components in group 'C63-LOG-FC-ESFLG'
		1.61E-01	XXX-XHE-FO-LPMAKEUP	OP. FAILS TO RECOG. NEED FOR LOW PRESS. MAKEUP AFTER DEPRESSURIZATION
151	1.02E-11	1.17E-03	%F9160	
		3.00E-03	B21-SQV-CC-F004C	EXPLOSIVE VALVE DPV C FAILS TO OPERATE
		1.80E-05	C63-LOG-FC-ESFLG_ALL	CCF of all components in group 'C63-LOG-FC-ESFLG'
		1.61E-01	XXX-XHE-FO-DEPRESS	OPERATOR FAILS TO RECOGNIZE NEED OF DEPRESSURIZATION
152	1.02E-11	1.17E-03	%F9160	
		3.00E-03	B21-SQV-CC-F004E	EXPLOSIVE VALVE DPV E FAILS TO OPERATE
		1.80E-05	C63-LOG-FC-ESFLG_ALL	CCF of all components in group 'C63-LOG-FC-ESFLG'
		1.61E-01	XXX-XHE-FO-LPMAKEUP	OP. FAILS TO RECOG. NEED FOR LOW PRESS. MAKEUP AFTER DEPRESSURIZATION
153	1.02E-11	1.17E-03	%F9160	
		3.00E-03	B21-SQV-CC-F004E	EXPLOSIVE VALVE DPV E FAILS TO OPERATE
		1.80E-05	C63-LOG-FC-ESFLG_ALL	CCF of all components in group 'C63-LOG-FC-ESFLG'
		1.61E-01	XXX-XHE-FO-DEPRESS	OPERATOR FAILS TO RECOGNIZE NEED OF DEPRESSURIZATION

Table 12.9-4

Cutset Report (Top 200) for Full-Power Core Damage Frequencies Due to Internal Fires

#	Cutset Prob	Event Prob	Event	Description
154	1.02E-11	1.17E-03	%F9160	
		3.00E-03	B21-SQV-CC-F004G	EXPLOSIVE VALVE DPV G FAILS TO OPERATE
		1.80E-05	C63-LOG-FC-ESFLG_ALL	CCF of all components in group 'C63-LOG-FC-ESFLG'
		1.61E-01	XXX-XHE-FO-LPMAKEUP	OP. FAILS TO RECOG. NEED FOR LOW PRESS. MAKEUP AFTER DEPRESSURIZATION
155	1.02E-11	1.17E-03	%F9160	
		3.00E-03	B21-SQV-CC-F004G	EXPLOSIVE VALVE DPV G FAILS TO OPERATE
		1.80E-05	C63-LOG-FC-ESFLG_ALL	CCF of all components in group 'C63-LOG-FC-ESFLG'
		1.61E-01	XXX-XHE-FO-DEPRESS	OPERATOR FAILS TO RECOGNIZE NEED OF DEPRESSURIZATION
156	1.01E-11	1.80E-02	%FSWYD	
		1.00E-04	C63-CCFSOFTWARE	Common cause failure of software
		1.00E-04	C72-CCFSOFTWARE	COMMON CAUSE FAILURE OF DPS PROCESSORS
		5.60E-02	R21-DG_-FR-DGA	DIESEL GENERATOR "A" FAILS TO RUN GIVEN START
157	1.01E-11	1.80E-02	%FSWYD	
		1.00E-04	C63-CCFSOFTWARE	Common cause failure of software
		1.00E-04	C72-CCFSOFTWARE	COMMON CAUSE FAILURE OF DPS PROCESSORS
		5.60E-02	R21-DG_-FR-DGB	DIESEL GENERATOR "B" FAILS TO RUN GIVEN START
158	9.95E-12	6.63E-03	%F5350	
		6.00E-03	B21-SRV-OO-ANYSRV1	SAFETY/RELIEF VALVE FAILS TO RE-CLOSE
		2.50E-07	C12-ROD-CF-SCRAM	CCF OF CONTROL RODS TO INSERT
159	9.95E-12	6.63E-03	%F5350	
		6.00E-03	B21-SRV-OO-ANYSRV10	SAFETY/RELIEF VALVE FAILS TO RE-CLOSE
		2.50E-07	C12-ROD-CF-SCRAM	CCF OF CONTROL RODS TO INSERT
160	9.95E-12	6.63E-03	%F5350	
		6.00E-03	B21-SRV-OO-ANYSRV11	SAFETY/RELIEF VALVE FAILS TO RE-CLOSE
		2.50E-07	C12-ROD-CF-SCRAM	CCF OF CONTROL RODS TO INSERT
161	9.95E-12	6.63E-03	%F5350	
		6.00E-03	B21-SRV-OO-ANYSRV12	SAFETY/RELIEF VALVE FAILS TO RE-CLOSE
		2.50E-07	C12-ROD-CF-SCRAM	CCF OF CONTROL RODS TO INSERT

Table 12.9-4

Cutset Report (Top 200) for Full-Power Core Damage Frequencies Due to Internal Fires

#	Cutset Prob	Event Prob	Event	Description
162	9.95E-12	6.63E-03	%F5350	
		6.00E-03	B21-SRV-OO-ANYSRV13	SAFETY/RELIEF VALVE FAILS TO RE-CLOSE
		2.50E-07	C12-ROD-CF-SCRAM	CCF OF CONTROL RODS TO INSERT
163	9.95E-12	6.63E-03	%F5350	
		6.00E-03	B21-SRV-OO-ANYSRV14	SAFETY/RELIEF VALVE FAILS TO RE-CLOSE
		2.50E-07	C12-ROD-CF-SCRAM	CCF OF CONTROL RODS TO INSERT
164	9.95E-12	6.63E-03	%F5350	
		6.00E-03	B21-SRV-OO-ANYSRV15	SAFETY/RELIEF VALVE FAILS TO RE-CLOSE
		2.50E-07	C12-ROD-CF-SCRAM	CCF OF CONTROL RODS TO INSERT
165	9.95E-12	6.63E-03	%F5350	
		6.00E-03	B21-SRV-OO-ANYSRV16	SAFETY/RELIEF VALVE FAILS TO RE-CLOSE
		2.50E-07	C12-ROD-CF-SCRAM	CCF OF CONTROL RODS TO INSERT
166	9.95E-12	6.63E-03	%F5350	
		6.00E-03	B21-SRV-OO-ANYSRV17	SAFETY/RELIEF VALVE FAILS TO RE-CLOSE
		2.50E-07	C12-ROD-CF-SCRAM	CCF OF CONTROL RODS TO INSERT
167	9.95E-12	6.63E-03	%F5350	
		6.00E-03	B21-SRV-OO-ANYSRV18	SAFETY/RELIEF VALVE FAILS TO RE-CLOSE
		2.50E-07	C12-ROD-CF-SCRAM	CCF OF CONTROL RODS TO INSERT
168	9.95E-12	6.63E-03	%F5350	
		6.00E-03	B21-SRV-OO-ANYSRV2	SAFETY/RELIEF VALVE FAILS TO RE-CLOSE
		2.50E-07	C12-ROD-CF-SCRAM	CCF OF CONTROL RODS TO INSERT
169	9.95E-12	6.63E-03	%F5350	
		6.00E-03	B21-SRV-OO-ANYSRV3	SAFETY/RELIEF VALVE FAILS TO RE-CLOSE
		2.50E-07	C12-ROD-CF-SCRAM	CCF OF CONTROL RODS TO INSERT
170	9.95E-12	6.63E-03	%F5350	
		6.00E-03	B21-SRV-OO-ANYSRV4	SAFETY/RELIEF VALVE FAILS TO RE-CLOSE
		2.50E-07	C12-ROD-CF-SCRAM	CCF OF CONTROL RODS TO INSERT
171	9.95E-12	6.63E-03	%F5350	
		6.00E-03	B21-SRV-OO-ANYSRV5	SAFETY/RELIEF VALVE FAILS TO RE-CLOSE
		2.50E-07	C12-ROD-CF-SCRAM	CCF OF CONTROL RODS TO INSERT

Table 12.9-4

Cutset Report (Top 200) for Full-Power Core Damage Frequencies Due to Internal Fires

#	Cutset Prob	Event Prob	Event	Description
172	9.95E-12	6.63E-03	%F5350	
		6.00E-03	B21-SRV-OO-ANYSRV6	SAFETY/RELIEF VALVE FAILS TO RE-CLOSE
		2.50E-07	C12-ROD-CF-SCRAM	CCF OF CONTROL RODS TO INSERT
173	9.95E-12	6.63E-03	%F5350	
		6.00E-03	B21-SRV-OO-ANYSRV7	SAFETY/RELIEF VALVE FAILS TO RE-CLOSE
		2.50E-07	C12-ROD-CF-SCRAM	CCF OF CONTROL RODS TO INSERT
174	9.95E-12	6.63E-03	%F5350	
		6.00E-03	B21-SRV-OO-ANYSRV8	SAFETY/RELIEF VALVE FAILS TO RE-CLOSE
		2.50E-07	C12-ROD-CF-SCRAM	CCF OF CONTROL RODS TO INSERT
175	9.95E-12	6.63E-03	%F5350	
		6.00E-03	B21-SRV-OO-ANYSRV9	SAFETY/RELIEF VALVE FAILS TO RE-CLOSE
		2.50E-07	C12-ROD-CF-SCRAM	CCF OF CONTROL RODS TO INSERT
176	9.81E-12	3.27E-05	%F3301_F3150	
		3.00E-03	C12-SYS-TM-TRAINB	TRAIN B IN MAINTENANCE
		1.00E-04	C63-CCFSOFTWARE	Common cause failure of software
177	9.81E-12	3.27E-05	%F3301_F3150	
		1.00E-04	C63-CCFSOFTWARE	Common cause failure of software
		3.00E-03	R10-LOSP-EPRI	CONSEQUENTIAL LOSS OF PREFERRED OFFSITE POWER DUE TO A TRANSIENT
178	9.19E-12	4.59E-02	%F4197	
		1.00E+00	B32-NONCONDENSE	Non condensable gasses form in ICS sufficiently to require venting
		1.76E-01	B32-XHE-FO-VENT	Operator fails to open vent
		1.00E-04	C72-CCFSOFTWARE	COMMON CAUSE FAILURE OF DPS PROCESSORS
		1.14E-05	R13-INV-FC-CCFSR_ALL	CCF of all components in group 'R13-INV-FC-CCFSR'
179	9.18E-12	4.59E-02	%F4197	
		2.50E-07	C12-ROD-CF-SCRAM	CCF OF CONTROL RODS TO INSERT
		8.00E-04	C41-UV_-CC-F004A	CHECK VALVE F004A FAILS TO OPEN
180	9.18E-12	4.59E-02	%F4197	
		2.50E-07	C12-ROD-CF-SCRAM	CCF OF CONTROL RODS TO INSERT
		8.00E-04	C41-UV_-CC-F004B	CHECK VALVE F004B FAILS TO OPEN

Table 12.9-4

Cutset Report (Top 200) for Full-Power Core Damage Frequencies Due to Internal Fires

#	Cutset Prob	Event Prob	Event	Description
181	9.18E-12	4.59E-02	%F4197	
		2.50E-07	C12-ROD-CF-SCRAM	CCF OF CONTROL RODS TO INSERT
		8.00E-04	C41-UV_-CC-F005A	CHECK VALVE F005A FAILS TO OPEN
182	9.18E-12	4.59E-02	%F4197	
		2.50E-07	C12-ROD-CF-SCRAM	CCF OF CONTROL RODS TO INSERT
		8.00E-04	C41-UV_-CC-F005B	CHECK VALVE F005B FAILS TO OPEN
183	9.10E-12	3.77E-03	%F1162	
		1.50E-04	B21-SQV-CC_ALL	CCF of all components in group 'B21-SQV-CC'
		1.00E-04	C63-CCFSOFTWARE_S	ESF SPURIOUS COMMON CAUSE SOFTWARE FAILURE
		1.61E-01	XXX-XHE-FO-LPMAKEUP	OP. FAILS TO RECOG. NEED FOR LOW PRESS. MAKEUP AFTER DEPRESSURIZATION
184	9.10E-12	3.77E-03	%F1162	
		1.50E-04	B21-SQV-CC_ALL	CCF of all components in group 'B21-SQV-CC'
		1.00E-04	C63-CCFSOFTWARE_S	ESF SPURIOUS COMMON CAUSE SOFTWARE FAILURE
		1.61E-01	XXX-XHE-FO-DEPRESS	OPERATOR FAILS TO RECOGNIZE NEED OF DEPRESSURIZATION
185	9.10E-12	3.77E-03	%F1162	
		1.00E-04	C63-CCFSOFTWARE_S	ESF SPURIOUS COMMON CAUSE SOFTWARE FAILURE
		1.50E-04	E50-SQV-CC-INJ_ALL	CCF of all components in group 'E50-SQV-CC-INJ'
		1.61E-01	XXX-XHE-FO-DEPRESS	OPERATOR FAILS TO RECOGNIZE NEED OF DEPRESSURIZATION
186	9.04E-12	1.04E-03	%F9150	
		3.00E-03	B21-SQV-CC-F004B	EXPLOSIVE VALVE DPV B FAILS TO OPERATE
		1.80E-05	C63-LOG-FC-ESFLG_ALL	CCF of all components in group 'C63-LOG-FC-ESFLG'
		1.61E-01	XXX-XHE-FO-LPMAKEUP	OP. FAILS TO RECOG. NEED FOR LOW PRESS. MAKEUP AFTER DEPRESSURIZATION
187	9.04E-12	1.04E-03	%F9150	
		3.00E-03	B21-SQV-CC-F004B	EXPLOSIVE VALVE DPV B FAILS TO OPERATE
		1.80E-05	C63-LOG-FC-ESFLG_ALL	CCF of all components in group 'C63-LOG-FC-ESFLG'
		1.61E-01	XXX-XHE-FO-DEPRESS	OPERATOR FAILS TO RECOGNIZE NEED OF DEPRESSURIZATION

Table 12.9-4

Cutset Report (Top 200) for Full-Power Core Damage Frequencies Due to Internal Fires

#	Cutset Prob	Event Prob	Event	Description
188	9.04E-12	1.04E-03	%F9150	
		3.00E-03	B21-SQV-CC-F004D	EXPLOSIVE VALVE DPV D FAILS TO OPERATE
		1.80E-05	C63-LOG-FC-ESFLG_ALL	CCF of all components in group 'C63-LOG-FC-ESFLG'
		1.61E-01	XXX-XHE-FO-LPMAKEUP	OP. FAILS TO RECOG. NEED FOR LOW PRESS. MAKEUP AFTER DEPRESSURIZATION
189	9.04E-12	1.04E-03	%F9150	
		3.00E-03	B21-SQV-CC-F004D	EXPLOSIVE VALVE DPV D FAILS TO OPERATE
		1.80E-05	C63-LOG-FC-ESFLG_ALL	CCF of all components in group 'C63-LOG-FC-ESFLG'
		1.61E-01	XXX-XHE-FO-DEPRESS	OPERATOR FAILS TO RECOGNIZE NEED OF DEPRESSURIZATION
190	9.04E-12	1.04E-03	%F9150	
		3.00E-03	B21-SQV-CC-F004F	EXPLOSIVE VALVE DPV F FAILS TO OPERATE
		1.80E-05	C63-LOG-FC-ESFLG_ALL	CCF of all components in group 'C63-LOG-FC-ESFLG'
		1.61E-01	XXX-XHE-FO-LPMAKEUP	OP. FAILS TO RECOG. NEED FOR LOW PRESS. MAKEUP AFTER DEPRESSURIZATION
191	9.04E-12	1.04E-03	%F9150	
		3.00E-03	B21-SQV-CC-F004F	EXPLOSIVE VALVE DPV F FAILS TO OPERATE
		1.80E-05	C63-LOG-FC-ESFLG_ALL	CCF of all components in group 'C63-LOG-FC-ESFLG'
		1.61E-01	XXX-XHE-FO-DEPRESS	OPERATOR FAILS TO RECOGNIZE NEED OF DEPRESSURIZATION
192	9.04E-12	1.04E-03	%F9150	
		3.00E-03	B21-SQV-CC-F004H	EXPLOSIVE VALVE DPV H FAILS TO OPERATE
		1.80E-05	C63-LOG-FC-ESFLG_ALL	CCF of all components in group 'C63-LOG-FC-ESFLG'
		1.61E-01	XXX-XHE-FO-LPMAKEUP	OP. FAILS TO RECOG. NEED FOR LOW PRESS. MAKEUP AFTER DEPRESSURIZATION
193	9.04E-12	1.04E-03	%F9150	
		3.00E-03	B21-SQV-CC-F004H	EXPLOSIVE VALVE DPV H FAILS TO OPERATE
		1.80E-05	C63-LOG-FC-ESFLG_ALL	CCF of all components in group 'C63-LOG-FC-ESFLG'
		1.61E-01	XXX-XHE-FO-DEPRESS	OPERATOR FAILS TO RECOGNIZE NEED OF DEPRESSURIZATION

Table 12.9-4

Cutset Report (Top 200) for Full-Power Core Damage Frequencies Due to Internal Fires

#	Cutset Prob	Event Prob	Event	Description
194	8.28E-12	1.80E-02	%FSWYD	
		1.00E-04	C63-CCFSOFTWARE	Common cause failure of software
		1.00E-04	C72-CCFSOFTWARE	COMMON CAUSE FAILURE OF DPS PROCESSORS
		4.60E-02	R21-DG_-TM-DGA	STANDBY DIESEL GENERATOR "A" IN MAINTENANCE
195	8.28E-12	1.80E-02	%FSWYD	
		1.00E-04	C63-CCFSOFTWARE	Common cause failure of software
		1.00E-04	C72-CCFSOFTWARE	COMMON CAUSE FAILURE OF DPS PROCESSORS
		4.60E-02	R21-DG_-TM-DGB	STANDBY DIESEL GENERATOR "B" IN MAINTENANCE
196	8.18E-12	3.27E-05	%F3301_F3150	
		2.50E-07	C12-ROD-CF-SCRAM	CCF OF CONTROL RODS TO INSERT
197	8.07E-12	1.17E-03	%F9160	
		6.90E-09	C12-ACV-CC-SCRV126	CCF TO OPEN OF AIR OPERATED SCRAM VALVE AOV-126
198	7.92E-12	3.27E-05	%F3301_F3150	
		3.00E-05	C63-DTM-FC-ESFLG_ALL	CCF of all components in group 'C63-DTM-FC-ESFLG'
		8.07E-03	P41-TRN-RE-PUMP2B	FAILURE TO RESTORE PSW PUMP 2B
199	7.79E-12	5.19E-03	%F3302	
		6.00E-03	B21-SRV-OO-ANYSRV1	SAFETY/RELIEF VALVE FAILS TO RE-CLOSE
		2.50E-07	C12-ROD-CF-SCRAM	CCF OF CONTROL RODS TO INSERT
200	7.79E-12	5.19E-03	%F3302	
		6.00E-03	B21-SRV-OO-ANYSRV10	SAFETY/RELIEF VALVE FAILS TO RE-CLOSE
		2.50E-07	C12-ROD-CF-SCRAM	CCF OF CONTROL RODS TO INSERT

Table 12.9-5

Cutset Report (Top 200) for Shutdown Core Damage Frequencies Due to Internal Fires

#	Cutset Prob	Event Prob	Event	Description
1	3.16E-10	1.97E-03	%F4197_M5	
		3.21E-02	C12-XHE-FO-LEVEL2	Operator fails to back-up CRD actuation
		1.00E-04	C63-CCFSOFTWARE	Common cause failure of software
		5.00E-02	MS-TOP2	TWO DPVs FAIL TO OPEN (MANUAL)
2	2.80E-10	4.93E-04	%F4197_M5O	
		5.00E-02	MS-TOP2	TWO DPVs FAIL TO OPEN (MANUAL)
		1.14E-05	R13-INV-FC-CCFSR_ALL	CCF of all components in group 'R13-INV-FC-CCFSR'
3	1.97E-10	1.97E-03	%F4197_M5	
		1.00E+00	B32-NONCONDENSE	Non condensable gasses form in ICS sufficiently to require venting
		1.76E-01	B32-XHE-FO-VENT	Operator fails to open vent
		5.00E-02	MS-TOP2	TWO DPVs FAIL TO OPEN (MANUAL)
		1.14E-05	R13-INV-FC-CCFSR_ALL	CCF of all components in group 'R13-INV-FC-CCFSR'
4	1.19E-10	4.93E-04	%F4197_M5O	
		1.50E-04	B21-SQV-CC_ALL	CCF of all components in group 'B21-SQV-CC'
		3.21E-02	C12-XHE-FO-LEVEL2	Operator fails to back-up CRD actuation
		5.00E-02	MS-TOP2	TWO DPVs FAIL TO OPEN (MANUAL)
5	1.13E-10	6.16E-04	%F4197_M6U	
		1.14E-05	R13-INV-FC-CCFSR_ALL	CCF of all components in group 'R13-INV-FC-CCFSR'
		1.61E-02	XXX-XHE-FO-LPMAKEUP	OP. FAILS TO RECOG. NEED FOR LOW PRESS. MAKEUP AFTER DEPRESSURIZATION
6	1.02E-10	1.97E-03	%F4197_M5	
		3.21E-02	C12-XHE-FO-LEVEL2	Operator fails to back-up CRD actuation
		1.00E-04	C63-CCFSOFTWARE	Common cause failure of software
		1.61E-02	XXX-XHE-FO-LPMAKEUP	OP. FAILS TO RECOG. NEED FOR LOW PRESS. MAKEUP AFTER DEPRESSURIZATION
7	9.55E-11	6.16E-04	%F4197_M6U	
		3.21E-02	C12-XHE-FO-LEVEL2	Operator fails to back-up CRD actuation
		3.00E-04	E50-SQV-CC-EQU_ALL	CCF of all components in group 'E50-SQV-CC-EQU'
		1.61E-02	XXX-XHE-FO-LPMAKEUP	OP. FAILS TO RECOG. NEED FOR LOW PRESS. MAKEUP AFTER DEPRESSURIZATION

Table 12.9-5

Cutset Report (Top 200) for Shutdown Core Damage Frequencies Due to Internal Fires

#	Cutset Prob	Event Prob	Event	Description
8	9.49E-11	1.97E-03	%F4197_M5	
		3.21E-02	C12-XHE-FO-LEVEL2	Operator fails to back-up CRD actuation
		3.00E-05	C63-DTM-FC-ESFLG_ALL	CCF of all components in group 'C63-DTM-FC-ESFLG'
		5.00E-02	MS-TOP2	TWO DPVs FAIL TO OPEN (MANUAL)
9	9.02E-11	4.93E-04	%F4197_M5O	
		1.14E-05	R13-INV-FC-CCFSR_ALL	CCF of all components in group 'R13-INV-FC-CCFSR'
		1.61E-02	XXX-XHE-FO-LPMAKEUP	OP. FAILS TO RECOG. NEED FOR LOW PRESS. MAKEUP AFTER DEPRESSURIZATION
10	8.36E-11	6.16E-04	%F4197_M6U	
		3.21E-02	C12-XHE-FO-LEVEL2	Operator fails to back-up CRD actuation
		2.63E-04	E50-BV_-OC-F004A	MAINTENANCE VALVE F004A PLUGS/TRANSFERS CLOSED
		1.61E-02	XXX-XHE-FO-LPMAKEUP	OP. FAILS TO RECOG. NEED FOR LOW PRESS. MAKEUP AFTER DEPRESSURIZATION
11	8.36E-11	6.16E-04	%F4197_M6U	
		3.21E-02	C12-XHE-FO-LEVEL2	Operator fails to back-up CRD actuation
		2.63E-04	E50-BV_-OC-F004D	MAINTENANCE VALVE F004D PLUGS/TRANSFERS CLOSED
		1.61E-02	XXX-XHE-FO-LPMAKEUP	OP. FAILS TO RECOG. NEED FOR LOW PRESS. MAKEUP AFTER DEPRESSURIZATION
12	7.91E-11	4.93E-04	%F4197_M5O	
		3.21E-02	C12-XHE-FO-LEVEL2	Operator fails to back-up CRD actuation
		1.00E-04	C63-CCFSOFTWARE	Common cause failure of software
		5.00E-02	MS-TOP2	TWO DPVs FAIL TO OPEN (MANUAL)
13	7.64E-11	4.93E-04	%F4197_M5O	
		3.21E-02	C12-XHE-FO-LEVEL2	Operator fails to back-up CRD actuation
		3.00E-04	E50-SQV-CC-EQU_ALL	CCF of all components in group 'E50-SQV-CC-EQU'
		1.61E-02	XXX-XHE-FO-LPMAKEUP	OP. FAILS TO RECOG. NEED FOR LOW PRESS. MAKEUP AFTER DEPRESSURIZATION

Table 12.9-5

Cutset Report (Top 200) for Shutdown Core Damage Frequencies Due to Internal Fires

#	Cutset Prob	Event Prob	Event	Description
14	6.69E-11	4.93E-04	%F4197_M5O	
		3.21E-02	C12-XHE-FO-LEVEL2	Operator fails to back-up CRD actuation
		2.63E-04	E50-BV_-OC-F004A	MAINTENANCE VALVE F004A PLUGS/TRANSFERS CLOSED
		1.61E-02	XXX-XHE-FO-LPMAKEUP	OP. FAILS TO RECOG. NEED FOR LOW PRESS. MAKEUP AFTER DEPRESSURIZATION
15	6.69E-11	4.93E-04	%F4197_M5O	
		3.21E-02	C12-XHE-FO-LEVEL2	Operator fails to back-up CRD actuation
		2.63E-04	E50-BV_-OC-F004D	MAINTENANCE VALVE F004D PLUGS/TRANSFERS CLOSED
		1.61E-02	XXX-XHE-FO-LPMAKEUP	OP. FAILS TO RECOG. NEED FOR LOW PRESS. MAKEUP AFTER DEPRESSURIZATION
16	6.35E-11	1.97E-03	%F4197_M5	
		1.00E+00	B32-NONCONDENSE	Non condensable gasses form in ICS sufficiently to require venting
		1.76E-01	B32-XHE-FO-VENT	Operator fails to open vent
		1.14E-05	R13-INV-FC-CCFSR_ALL	CCF of all components in group 'R13-INV-FC-CCFSR'
		1.61E-02	XXX-XHE-FO-LPMAKEUP	OP. FAILS TO RECOG. NEED FOR LOW PRESS. MAKEUP AFTER DEPRESSURIZATION
17	5.69E-11	1.97E-03	%F4197_M5	
		3.21E-02	C12-XHE-FO-LEVEL2	Operator fails to back-up CRD actuation
		1.80E-05	C63-LOG-FC-ESFLG_ALL	CCF of all components in group 'C63-LOG-FC-ESFLG'
		5.00E-02	MS-TOP2	TWO DPVs FAIL TO OPEN (MANUAL)
18	4.78E-11	6.16E-04	%F4197_M6U	
		3.21E-02	C12-XHE-FO-LEVEL2	Operator fails to back-up CRD actuation
		1.50E-04	E50-SQV-CC-INJ_ALL	CCF of all components in group 'E50-SQV-CC-INJ'
		1.61E-02	XXX-XHE-FO-LPMAKEUP	OP. FAILS TO RECOG. NEED FOR LOW PRESS. MAKEUP AFTER DEPRESSURIZATION
19	4.30E-11	1.97E-03	%F4197_M5	
		3.84E-02	B32-TM-LOOPA-IND	ICS LOOP A IN TEST OR MAINTENANCE BY ITSELF
		5.00E-02	MS-TOP2	TWO DPVs FAIL TO OPEN (MANUAL)
		1.14E-05	R13-INV-FC-CCFSR_ALL	CCF of all components in group 'R13-INV-FC-CCFSR'

Table 12.9-5

Cutset Report (Top 200) for Shutdown Core Damage Frequencies Due to Internal Fires

#	Cutset Prob	Event Prob	Event	Description
20	4.30E-11	1.97E-03	%F4197_M5	
		3.84E-02	B32-TM-LOOPB-IND	ICS LOOP B IN TEST OR MAINTENANCE BY ITSELF
		5.00E-02	MS-TOP2	TWO DPVs FAIL TO OPEN (MANUAL)
		1.14E-05	R13-INV-FC-CCFSR_ALL	CCF of all components in group 'R13-INV-FC-CCFSR'
21	3.94E-11	1.97E-03	%F4197_M5	
		4.00E-03	C12-MOV-CC-F023	MOTOR OPERATED VALVE F023 FAILS TO OPEN
		1.00E-04	C63-CCFSOFTWARE	Common cause failure of software
		5.00E-02	MS-TOP2	TWO DPVs FAIL TO OPEN (MANUAL)
22	3.94E-11	1.97E-03	%F4197_M5	
		4.00E-03	C12-MOV-OO-F024	MOTOR OPERATED VALVE F024 FAILS TO CLOSE
		1.00E-04	C63-CCFSOFTWARE	Common cause failure of software
		5.00E-02	MS-TOP2	TWO DPVs FAIL TO OPEN (MANUAL)
23	3.94E-11	1.97E-03	%F4197_M5	
		4.00E-03	C12-MOV-OO-F062A	MOTOR OPERATED VALVE F062A FAILS TO CLOSE
		1.00E-04	C63-CCFSOFTWARE	Common cause failure of software
		5.00E-02	MS-TOP2	TWO DPVs FAIL TO OPEN (MANUAL)
24	3.94E-11	1.97E-03	%F4197_M5	
		4.00E-03	C12-MOV-OO-F062B	MOTOR OPERATED VALVE F062B FAILS TO CLOSE
		1.00E-04	C63-CCFSOFTWARE	Common cause failure of software
		5.00E-02	MS-TOP2	TWO DPVs FAIL TO OPEN (MANUAL)
25	3.82E-11	4.93E-04	%F4197_M5O	
		1.50E-04	B21-SQV-CC_ALL	CCF of all components in group 'B21-SQV-CC'
		3.21E-02	C12-XHE-FO-LEVEL2	Operator fails to back-up CRD actuation
		1.61E-02	XXX-XHE-FO-LPMAKEUP	OP. FAILS TO RECOG. NEED FOR LOW PRESS. MAKEUP AFTER DEPRESSURIZATION
26	3.82E-11	4.93E-04	%F4197_M5O	
		3.21E-02	C12-XHE-FO-LEVEL2	Operator fails to back-up CRD actuation
		1.50E-04	E50-SQV-CC-INJ_ALL	CCF of all components in group 'E50-SQV-CC-INJ'
		1.61E-02	XXX-XHE-FO-LPMAKEUP	OP. FAILS TO RECOG. NEED FOR LOW PRESS. MAKEUP AFTER DEPRESSURIZATION

Table 12.9-5

Cutset Report (Top 200) for Shutdown Core Damage Frequencies Due to Internal Fires

#	Cutset Prob	Event Prob	Event	Description
27	3.36E-11	6.72E-06	%F1152_F1162_M5	
		1.00E-04	C63-CCFSOFTWARE	Common cause failure of software
		5.00E-02	MS-TOP2	TWO DPVs FAIL TO OPEN (MANUAL)
28	3.18E-11	6.16E-04	%F4197_M6U	
		3.21E-02	C12-XHE-FO-LEVEL2	Operator fails to back-up CRD actuation
		1.00E-04	C63-CCFSOFTWARE	Common cause failure of software
		1.61E-02	XXX-XHE-FO-LPMAKEUP	OP. FAILS TO RECOG. NEED FOR LOW PRESS. MAKEUP AFTER DEPRESSURIZATION
29	3.05E-11	1.97E-03	%F4197_M5	
		3.21E-02	C12-XHE-FO-LEVEL2	Operator fails to back-up CRD actuation
		3.00E-05	C63-DTM-FC-ESFLG_ALL	CCF of all components in group 'C63-DTM-FC-ESFLG'
		1.61E-02	XXX-XHE-FO-LPMAKEUP	OP. FAILS TO RECOG. NEED FOR LOW PRESS. MAKEUP AFTER DEPRESSURIZATION
30	2.55E-11	4.93E-04	%F4197_M5O	
		3.21E-02	C12-XHE-FO-LEVEL2	Operator fails to back-up CRD actuation
		1.00E-04	C63-CCFSOFTWARE	Common cause failure of software
		1.61E-02	XXX-XHE-FO-LPMAKEUP	OP. FAILS TO RECOG. NEED FOR LOW PRESS. MAKEUP AFTER DEPRESSURIZATION
31	2.37E-11	4.93E-04	%F4197_M5O	
		3.21E-02	C12-XHE-FO-LEVEL2	Operator fails to back-up CRD actuation
		3.00E-05	C63-DTM-FC-ESFLG_ALL	CCF of all components in group 'C63-DTM-FC-ESFLG'
		5.00E-02	MS-TOP2	TWO DPVs FAIL TO OPEN (MANUAL)
32	2.31E-11	1.97E-03	%F4197_M5	
		4.84E-02	C12-BV_-RE-F013A	MISPOSITION OF VALVE F013A
		4.84E-02	C12-BV_-RE-F013B	MISPOSITION OF VALVE F013B
		1.00E-04	C63-CCFSOFTWARE	Common cause failure of software
		5.00E-02	MS-TOP2	TWO DPVs FAIL TO OPEN (MANUAL)

Table 12.9-5

Cutset Report (Top 200) for Shutdown Core Damage Frequencies Due to Internal Fires

#	Cutset Prob	Event Prob	Event	Description
33	2.31E-11	1.97E-03	%F4197_M5	
		4.84E-02	C12-BV_-RE-F013A	MISPOSITION OF VALVE F013A
		4.84E-02	C12-BV_-RE-F015B	MISPOSITION OF VALVE F015B
		1.00E-04	C63-CCFSOFTWARE	Common cause failure of software
		5.00E-02	MS-TOP2	TWO DPVs FAIL TO OPEN (MANUAL)
34	2.31E-11	1.97E-03	%F4197_M5	
		4.84E-02	C12-BV_-RE-F013B	MISPOSITION OF VALVE F013B
		4.84E-02	C12-BV_-RE-F015A	MISPOSITION OF VALVE F015A
		1.00E-04	C63-CCFSOFTWARE	Common cause failure of software
		5.00E-02	MS-TOP2	TWO DPVs FAIL TO OPEN (MANUAL)
35	2.31E-11	1.97E-03	%F4197_M5	
		4.84E-02	C12-BV_-RE-F015A	MISPOSITION OF VALVE F015A
		4.84E-02	C12-BV_-RE-F015B	MISPOSITION OF VALVE F015B
		1.00E-04	C63-CCFSOFTWARE	Common cause failure of software
		5.00E-02	MS-TOP2	TWO DPVs FAIL TO OPEN (MANUAL)
36	2.01E-11	4.93E-04	%F4197_M5O	
		5.00E-02	MS-TOP2	TWO DPVs FAIL TO OPEN (MANUAL)
		8.14E-07	R16-BT_-LP-CCFSR_ALL	CCF of all components in group 'R16-BT_-LP-CCFSR'
37	1.97E-11	1.97E-03	%F4197_M5	
		2.00E-03	C12-ACV-OO-F012	AIR OPERATED VALVE F012 FAILS TO CLOSE
		1.00E-04	C63-CCFSOFTWARE	Common cause failure of software
		5.00E-02	MS-TOP2	TWO DPVs FAIL TO OPEN (MANUAL)
38	1.97E-11	1.97E-03	%F4197_M5	
		2.00E-03	C12-ACV-OO-F030	AIR OPERATED VALVE F030 FAILS TO CLOSE
		1.00E-04	C63-CCFSOFTWARE	Common cause failure of software
		5.00E-02	MS-TOP2	TWO DPVs FAIL TO OPEN (MANUAL)

Table 12.9-5

Cutset Report (Top 200) for Shutdown Core Damage Frequencies Due to Internal Fires

#	Cutset Prob	Event Prob	Event	Description
39	1.83E-11	1.97E-03	%F4197_M5	
		3.21E-02	C12-XHE-FO-LEVEL2	Operator fails to back-up CRD actuation
		1.80E-05	C63-LOG-FC-ESFLG_ALL	CCF of all components in group 'C63-LOG-FC-ESFLG'
		1.61E-02	XXX-XHE-FO-LPMAKEUP	OP. FAILS TO RECOG. NEED FOR LOW PRESS. MAKEUP AFTER DEPRESSURIZATION
40	1.83E-11	3.65E-06	%F4250_F4260_M5	
		1.00E-04	C63-CCFSOFTWARE	Common cause failure of software
		5.00E-02	MS-TOP2	TWO DPVs FAIL TO OPEN (MANUAL)
41	1.82E-11	1.97E-03	%F4197_M5	
		1.50E-04	B21-SQV-CC_ALL	CCF of all components in group 'B21-SQV-CC'
		3.84E-02	B32-TM-LOOPA-IND	ICS LOOP A IN TEST OR MAINTENANCE BY ITSELF
		3.21E-02	C12-XHE-FO-LEVEL2	Operator fails to back-up CRD actuation
		5.00E-02	MS-TOP2	TWO DPVs FAIL TO OPEN (MANUAL)
42	1.82E-11	1.97E-03	%F4197_M5	
		1.50E-04	B21-SQV-CC_ALL	CCF of all components in group 'B21-SQV-CC'
		3.84E-02	B32-TM-LOOPB-IND	ICS LOOP B IN TEST OR MAINTENANCE BY ITSELF
		3.21E-02	C12-XHE-FO-LEVEL2	Operator fails to back-up CRD actuation
		5.00E-02	MS-TOP2	TWO DPVs FAIL TO OPEN (MANUAL)
43	1.48E-11	4.93E-04	%F4197_M5O	
		1.50E-04	B21-SQV-CC_ALL	CCF of all components in group 'B21-SQV-CC'
		4.00E-03	C12-MOV-CC-F023	MOTOR OPERATED VALVE F023 FAILS TO OPEN
		5.00E-02	MS-TOP2	TWO DPVs FAIL TO OPEN (MANUAL)
44	1.48E-11	4.93E-04	%F4197_M5O	
		1.50E-04	B21-SQV-CC_ALL	CCF of all components in group 'B21-SQV-CC'
		4.00E-03	C12-MOV-OO-F024	MOTOR OPERATED VALVE F024 FAILS TO CLOSE
		5.00E-02	MS-TOP2	TWO DPVs FAIL TO OPEN (MANUAL)
45	1.48E-11	4.93E-04	%F4197_M5O	
		1.50E-04	B21-SQV-CC_ALL	CCF of all components in group 'B21-SQV-CC'
		4.00E-03	C12-MOV-OO-F062A	MOTOR OPERATED VALVE F062A FAILS TO CLOSE
		5.00E-02	MS-TOP2	TWO DPVs FAIL TO OPEN (MANUAL)

Table 12.9-5

Cutset Report (Top 200) for Shutdown Core Damage Frequencies Due to Internal Fires

#	Cutset Prob	Event Prob	Event	Description
46	1.48E-11	4.93E-04	%F4197_M5O	
		1.50E-04	B21-SQV-CC_ALL	CCF of all components in group 'B21-SQV-CC'
		4.00E-03	C12-MOV-OO-F062B	MOTOR OPERATED VALVE F062B FAILS TO CLOSE
		5.00E-02	MS-TOP2	TWO DPVs FAIL TO OPEN (MANUAL)
47	1.42E-11	4.93E-04	%F4197_M5O	
		3.21E-02	C12-XHE-FO-LEVEL2	Operator fails to back-up CRD actuation
		1.80E-05	C63-LOG-FC-ESFLG_ALL	CCF of all components in group 'C63-LOG-FC-ESFLG'
		5.00E-02	MS-TOP2	TWO DPVs FAIL TO OPEN (MANUAL)
48	1.41E-11	1.97E-03	%F4197_M5	
		1.00E+00	B32-NONCONDENSE	Non condensable gasses form in ICS sufficiently to require venting
		1.76E-01	B32-XHE-FO-VENT	Operator fails to open vent
		5.00E-02	MS-TOP2	TWO DPVs FAIL TO OPEN (MANUAL)
		8.14E-07	R16-BT_-LP-CCFSR_ALL	CCF of all components in group 'R16-BT_-LP-CCFSR'
49	1.38E-11	1.97E-03	%F4197_M5	
		3.84E-02	B32-TM-LOOPA-IND	ICS LOOP A IN TEST OR MAINTENANCE BY ITSELF
		1.14E-05	R13-INV-FC-CCFSR_ALL	CCF of all components in group 'R13-INV-FC-CCFSR'
		1.61E-02	XXX-XHE-FO-LPMAKEUP	OP. FAILS TO RECOG. NEED FOR LOW PRESS. MAKEUP AFTER DEPRESSURIZATION
50	1.38E-11	1.97E-03	%F4197_M5	
		3.84E-02	B32-TM-LOOPB-IND	ICS LOOP B IN TEST OR MAINTENANCE BY ITSELF
		1.14E-05	R13-INV-FC-CCFSR_ALL	CCF of all components in group 'R13-INV-FC-CCFSR'
		1.61E-02	XXX-XHE-FO-LPMAKEUP	OP. FAILS TO RECOG. NEED FOR LOW PRESS. MAKEUP AFTER DEPRESSURIZATION
51	1.27E-11	1.97E-03	%F4197_M5	
		4.00E-03	C12-MOV-CC-F023	MOTOR OPERATED VALVE F023 FAILS TO OPEN
		1.00E-04	C63-CCFSOFTWARE	Common cause failure of software
		1.61E-02	XXX-XHE-FO-LPMAKEUP	OP. FAILS TO RECOG. NEED FOR LOW PRESS. MAKEUP AFTER DEPRESSURIZATION

Table 12.9-5

Cutset Report (Top 200) for Shutdown Core Damage Frequencies Due to Internal Fires

#	Cutset Prob	Event Prob	Event	Description
52	1.27E-11	1.97E-03	%F4197_M5	
		4.00E-03	C12-MOV-OO-F024	MOTOR OPERATED VALVE F024 FAILS TO CLOSE
		1.00E-04	C63-CCFSOFTWARE	Common cause failure of software
		1.61E-02	XXX-XHE-FO-LPMAKEUP	OP. FAILS TO RECOG. NEED FOR LOW PRESS. MAKEUP AFTER DEPRESSURIZATION
53	1.27E-11	1.97E-03	%F4197_M5	
		4.00E-03	C12-MOV-OO-F062A	MOTOR OPERATED VALVE F062A FAILS TO CLOSE
		1.00E-04	C63-CCFSOFTWARE	Common cause failure of software
		1.61E-02	XXX-XHE-FO-LPMAKEUP	OP. FAILS TO RECOG. NEED FOR LOW PRESS. MAKEUP AFTER DEPRESSURIZATION
54	1.27E-11	1.97E-03	%F4197_M5	
		4.00E-03	C12-MOV-OO-F062B	MOTOR OPERATED VALVE F062B FAILS TO CLOSE
		1.00E-04	C63-CCFSOFTWARE	Common cause failure of software
		1.61E-02	XXX-XHE-FO-LPMAKEUP	OP. FAILS TO RECOG. NEED FOR LOW PRESS. MAKEUP AFTER DEPRESSURIZATION
55	1.26E-11	1.68E-06	%F1152_F1162_M5O	
		1.50E-04	B21-SQV-CC_ALL	CCF of all components in group 'B21-SQV-CC'
		5.00E-02	MS-TOP2	TWO DPVs FAIL TO OPEN (MANUAL)
56	1.26E-11	5.70E-04	%FSWYD_M5	
		1.00E-04	C63-CCFSOFTWARE	Common cause failure of software
		5.00E-02	MS-TOP2	TWO DPVs FAIL TO OPEN (MANUAL)
		4.41E-03	R21-DG_-FR-CCF_1_2	CCF of two components: R21-DG_-FR-DGA & R21-DG_-FR-DGB
57	1.19E-11	6.16E-04	%F4197_M6U	
		4.00E-03	C12-MOV-CC-F023	MOTOR OPERATED VALVE F023 FAILS TO OPEN
		3.00E-04	E50-SQV-CC-EQU_ALL	CCF of all components in group 'E50-SQV-CC-EQU'
		1.61E-02	XXX-XHE-FO-LPMAKEUP	OP. FAILS TO RECOG. NEED FOR LOW PRESS. MAKEUP AFTER DEPRESSURIZATION

Table 12.9-5

Cutset Report (Top 200) for Shutdown Core Damage Frequencies Due to Internal Fires

#	Cutset Prob	Event Prob	Event	Description
58	1.19E-11	6.16E-04	%F4197_M6U	
		4.00E-03	C12-MOV-OO-F024	MOTOR OPERATED VALVE F024 FAILS TO CLOSE
		3.00E-04	E50-SQV-CC-EQU_ALL	CCF of all components in group 'E50-SQV-CC-EQU'
		1.61E-02	XXX-XHE-FO-LPMAKEUP	OP. FAILS TO RECOG. NEED FOR LOW PRESS. MAKEUP AFTER DEPRESSURIZATION
59	1.19E-11	6.16E-04	%F4197_M6U	
		4.00E-03	C12-MOV-OO-F062A	MOTOR OPERATED VALVE F062A FAILS TO CLOSE
		3.00E-04	E50-SQV-CC-EQU_ALL	CCF of all components in group 'E50-SQV-CC-EQU'
		1.61E-02	XXX-XHE-FO-LPMAKEUP	OP. FAILS TO RECOG. NEED FOR LOW PRESS. MAKEUP AFTER DEPRESSURIZATION
60	1.19E-11	6.16E-04	%F4197_M6U	
		4.00E-03	C12-MOV-OO-F062B	MOTOR OPERATED VALVE F062B FAILS TO CLOSE
		3.00E-04	E50-SQV-CC-EQU_ALL	CCF of all components in group 'E50-SQV-CC-EQU'
		1.61E-02	XXX-XHE-FO-LPMAKEUP	OP. FAILS TO RECOG. NEED FOR LOW PRESS. MAKEUP AFTER DEPRESSURIZATION
61	1.18E-11	1.97E-03	%F4197_M5	
		4.00E-03	C12-MOV-CC-F023	MOTOR OPERATED VALVE F023 FAILS TO OPEN
		3.00E-05	C63-DTM-FC-ESFLG_ALL	CCF of all components in group 'C63-DTM-FC-ESFLG'
		5.00E-02	MS-TOP2	TWO DPVs FAIL TO OPEN (MANUAL)
62	1.18E-11	1.97E-03	%F4197_M5	
		4.00E-03	C12-MOV-OO-F024	MOTOR OPERATED VALVE F024 FAILS TO CLOSE
		3.00E-05	C63-DTM-FC-ESFLG_ALL	CCF of all components in group 'C63-DTM-FC-ESFLG'
		5.00E-02	MS-TOP2	TWO DPVs FAIL TO OPEN (MANUAL)
63	1.18E-11	1.97E-03	%F4197_M5	
		4.00E-03	C12-MOV-OO-F062A	MOTOR OPERATED VALVE F062A FAILS TO CLOSE
		3.00E-05	C63-DTM-FC-ESFLG_ALL	CCF of all components in group 'C63-DTM-FC-ESFLG'
		5.00E-02	MS-TOP2	TWO DPVs FAIL TO OPEN (MANUAL)
64	1.18E-11	1.97E-03	%F4197_M5	
		4.00E-03	C12-MOV-OO-F062B	MOTOR OPERATED VALVE F062B FAILS TO CLOSE
		3.00E-05	C63-DTM-FC-ESFLG_ALL	CCF of all components in group 'C63-DTM-FC-ESFLG'
		5.00E-02	MS-TOP2	TWO DPVs FAIL TO OPEN (MANUAL)

Table 12.9-5

Cutset Report (Top 200) for Shutdown Core Damage Frequencies Due to Internal Fires

#	Cutset Prob	Event Prob	Event	Description
65	1.17E-11	1.97E-03	%F4197_M5	
		3.84E-02	B32-TM-LOOPA-IND	ICS LOOP A IN TEST OR MAINTENANCE BY ITSELF
		3.21E-02	C12-XHE-FO-LEVEL2	Operator fails to back-up CRD actuation
		3.00E-04	E50-SQV-CC-EQU_ALL	CCF of all components in group 'E50-SQV-CC-EQU'
		1.61E-02	XXX-XHE-FO-LPMAKEUP	OP. FAILS TO RECOG. NEED FOR LOW PRESS. MAKEUP AFTER DEPRESSURIZATION
66	1.17E-11	1.97E-03	%F4197_M5	
		3.84E-02	B32-TM-LOOPB-IND	ICS LOOP B IN TEST OR MAINTENANCE BY ITSELF
		3.21E-02	C12-XHE-FO-LEVEL2	Operator fails to back-up CRD actuation
		3.00E-04	E50-SQV-CC-EQU_ALL	CCF of all components in group 'E50-SQV-CC-EQU'
		1.61E-02	XXX-XHE-FO-LPMAKEUP	OP. FAILS TO RECOG. NEED FOR LOW PRESS. MAKEUP AFTER DEPRESSURIZATION
67	1.14E-11	1.97E-03	%F4197_M5	
		3.21E-02	C12-XHE-FO-LEVEL2	Operator fails to back-up CRD actuation
		3.60E-06	C63-LT_-NO-ESFRX_ALL	CCF of all components in group 'C63-LT_-NO-ESFRX'
		5.00E-02	MS-TOP2	TWO DPVs FAIL TO OPEN (MANUAL)
68	1.08E-11	6.72E-06	%F1152_F1162_M5	
		1.00E-04	C63-CCFSOFTWARE	Common cause failure of software
		1.61E-02	XXX-XHE-FO-LPMAKEUP	OP. FAILS TO RECOG. NEED FOR LOW PRESS. MAKEUP AFTER DEPRESSURIZATION
69	1.04E-11	6.16E-04	%F4197_M6U	
		4.00E-03	C12-MOV-CC-F023	MOTOR OPERATED VALVE F023 FAILS TO OPEN
		2.63E-04	E50-BV_-OC-F004A	MAINTENANCE VALVE F004A PLUGS/TRANSFERS CLOSED
		1.61E-02	XXX-XHE-FO-LPMAKEUP	OP. FAILS TO RECOG. NEED FOR LOW PRESS. MAKEUP AFTER DEPRESSURIZATION
70	1.04E-11	6.16E-04	%F4197_M6U	
		4.00E-03	C12-MOV-CC-F023	MOTOR OPERATED VALVE F023 FAILS TO OPEN
		2.63E-04	E50-BV_-OC-F004D	MAINTENANCE VALVE F004D PLUGS/TRANSFERS CLOSED
		1.61E-02	XXX-XHE-FO-LPMAKEUP	OP. FAILS TO RECOG. NEED FOR LOW PRESS. MAKEUP AFTER DEPRESSURIZATION

Table 12.9-5

Cutset Report (Top 200) for Shutdown Core Damage Frequencies Due to Internal Fires

#	Cutset Prob	Event Prob	Event	Description
71	1.04E-11	6.16E-04	%F4197_M6U	
		4.00E-03	C12-MOV-OO-F024	MOTOR OPERATED VALVE F024 FAILS TO CLOSE
		2.63E-04	E50-BV_-OC-F004A	MAINTENANCE VALVE F004A PLUGS/TRANSFERS CLOSED
		1.61E-02	XXX-XHE-FO-LPMAKEUP	OP. FAILS TO RECOG. NEED FOR LOW PRESS. MAKEUP AFTER DEPRESSURIZATION
72	1.04E-11	6.16E-04	%F4197_M6U	
		4.00E-03	C12-MOV-OO-F024	MOTOR OPERATED VALVE F024 FAILS TO CLOSE
		2.63E-04	E50-BV_-OC-F004D	MAINTENANCE VALVE F004D PLUGS/TRANSFERS CLOSED
		1.61E-02	XXX-XHE-FO-LPMAKEUP	OP. FAILS TO RECOG. NEED FOR LOW PRESS. MAKEUP AFTER DEPRESSURIZATION
73	1.04E-11	6.16E-04	%F4197_M6U	
		4.00E-03	C12-MOV-OO-F062A	MOTOR OPERATED VALVE F062A FAILS TO CLOSE
		2.63E-04	E50-BV_-OC-F004A	MAINTENANCE VALVE F004A PLUGS/TRANSFERS CLOSED
		1.61E-02	XXX-XHE-FO-LPMAKEUP	OP. FAILS TO RECOG. NEED FOR LOW PRESS. MAKEUP AFTER DEPRESSURIZATION
74	1.04E-11	6.16E-04	%F4197_M6U	
		4.00E-03	C12-MOV-OO-F062A	MOTOR OPERATED VALVE F062A FAILS TO CLOSE
		2.63E-04	E50-BV_-OC-F004D	MAINTENANCE VALVE F004D PLUGS/TRANSFERS CLOSED
		1.61E-02	XXX-XHE-FO-LPMAKEUP	OP. FAILS TO RECOG. NEED FOR LOW PRESS. MAKEUP AFTER DEPRESSURIZATION
75	1.04E-11	6.16E-04	%F4197_M6U	
		4.00E-03	C12-MOV-OO-F062B	MOTOR OPERATED VALVE F062B FAILS TO CLOSE
		2.63E-04	E50-BV_-OC-F004A	MAINTENANCE VALVE F004A PLUGS/TRANSFERS CLOSED
		1.61E-02	XXX-XHE-FO-LPMAKEUP	OP. FAILS TO RECOG. NEED FOR LOW PRESS. MAKEUP AFTER DEPRESSURIZATION
76	1.04E-11	6.16E-04	%F4197_M6U	
		4.00E-03	C12-MOV-OO-F062B	MOTOR OPERATED VALVE F062B FAILS TO CLOSE
		2.63E-04	E50-BV_-OC-F004D	MAINTENANCE VALVE F004D PLUGS/TRANSFERS CLOSED
		1.61E-02	XXX-XHE-FO-LPMAKEUP	OP. FAILS TO RECOG. NEED FOR LOW PRESS. MAKEUP AFTER DEPRESSURIZATION

Table 12.9-5

Cutset Report (Top 200) for Shutdown Core Damage Frequencies Due to Internal Fires

#	Cutset Prob	Event Prob	Event	Description
77	1.03E-11	1.97E-03	%F4197_M5	
		3.84E-02	B32-TM-LOOPA-IND	ICS LOOP A IN TEST OR MAINTENANCE BY ITSELF
		3.21E-02	C12-XHE-FO-LEVEL2	Operator fails to back-up CRD actuation
		2.63E-04	E50-BV_-OC-F004A	MAINTENANCE VALVE F004A PLUGS/TRANSFERS CLOSED
		1.61E-02	XXX-XHE-FO-LPMAKEUP	OP. FAILS TO RECOG. NEED FOR LOW PRESS. MAKEUP AFTER DEPRESSURIZATION
78	1.03E-11	1.97E-03	%F4197_M5	
		3.84E-02	B32-TM-LOOPA-IND	ICS LOOP A IN TEST OR MAINTENANCE BY ITSELF
		3.21E-02	C12-XHE-FO-LEVEL2	Operator fails to back-up CRD actuation
		2.63E-04	E50-BV_-OC-F004D	MAINTENANCE VALVE F004D PLUGS/TRANSFERS CLOSED
		1.61E-02	XXX-XHE-FO-LPMAKEUP	OP. FAILS TO RECOG. NEED FOR LOW PRESS. MAKEUP AFTER DEPRESSURIZATION
79	1.03E-11	1.97E-03	%F4197_M5	
		3.84E-02	B32-TM-LOOPB-IND	ICS LOOP B IN TEST OR MAINTENANCE BY ITSELF
		3.21E-02	C12-XHE-FO-LEVEL2	Operator fails to back-up CRD actuation
		2.63E-04	E50-BV_-OC-F004A	MAINTENANCE VALVE F004A PLUGS/TRANSFERS CLOSED
		1.61E-02	XXX-XHE-FO-LPMAKEUP	OP. FAILS TO RECOG. NEED FOR LOW PRESS. MAKEUP AFTER DEPRESSURIZATION
80	1.03E-11	1.97E-03	%F4197_M5	
		3.84E-02	B32-TM-LOOPB-IND	ICS LOOP B IN TEST OR MAINTENANCE BY ITSELF
		3.21E-02	C12-XHE-FO-LEVEL2	Operator fails to back-up CRD actuation
		2.63E-04	E50-BV_-OC-F004D	MAINTENANCE VALVE F004D PLUGS/TRANSFERS CLOSED
		1.61E-02	XXX-XHE-FO-LPMAKEUP	OP. FAILS TO RECOG. NEED FOR LOW PRESS. MAKEUP AFTER DEPRESSURIZATION
81	1.01E-11	2.10E-06	%F1152_F1162_M6U	
		3.00E-04	E50-SQV-CC-EQU_ALL	CCF of all components in group 'E50-SQV-CC-EQU'
		1.61E-02	XXX-XHE-FO-LPMAKEUP	OP. FAILS TO RECOG. NEED FOR LOW PRESS. MAKEUP AFTER DEPRESSURIZATION
82	1.01E-11	6.72E-06	%F1152_F1162_M5	
		3.00E-05	C63-DTM-FC-ESFLG_ALL	CCF of all components in group 'C63-DTM-FC-ESFLG'
		5.00E-02	MS-TOP2	TWO DPVs FAIL TO OPEN (MANUAL)

Table 12.9-5

Cutset Report (Top 200) for Shutdown Core Damage Frequencies Due to Internal Fires

#	Cutset Prob	Event Prob	Event	Description
83	9.86E-12	4.93E-04	%F4197_M5O	
		4.00E-03	C12-MOV-CC-F023	MOTOR OPERATED VALVE F023 FAILS TO OPEN
		1.00E-04	C63-CCFSOFTWARE	Common cause failure of software
		5.00E-02	MS-TOP2	TWO DPVs FAIL TO OPEN (MANUAL)
84	9.86E-12	4.93E-04	%F4197_M5O	
		4.00E-03	C12-MOV-OO-F024	MOTOR OPERATED VALVE F024 FAILS TO CLOSE
		1.00E-04	C63-CCFSOFTWARE	Common cause failure of software
		5.00E-02	MS-TOP2	TWO DPVs FAIL TO OPEN (MANUAL)
85	9.86E-12	4.93E-04	%F4197_M5O	
		4.00E-03	C12-MOV-OO-F062A	MOTOR OPERATED VALVE F062A FAILS TO CLOSE
		1.00E-04	C63-CCFSOFTWARE	Common cause failure of software
		5.00E-02	MS-TOP2	TWO DPVs FAIL TO OPEN (MANUAL)
86	9.86E-12	4.93E-04	%F4197_M5O	
		4.00E-03	C12-MOV-OO-F062B	MOTOR OPERATED VALVE F062B FAILS TO CLOSE
		1.00E-04	C63-CCFSOFTWARE	Common cause failure of software
		5.00E-02	MS-TOP2	TWO DPVs FAIL TO OPEN (MANUAL)
87	9.55E-12	6.16E-04	%F4197_M6U	
		3.21E-02	C12-XHE-FO-LEVEL2	Operator fails to back-up CRD actuation
		3.00E-05	C63-DTM-FC-ESFLG_ALL	CCF of all components in group 'C63-DTM-FC-ESFLG'
		1.61E-02	XXX-XHE-FO-LPMAKEUP	OP. FAILS TO RECOG. NEED FOR LOW PRESS. MAKEUP AFTER DEPRESSURIZATION
88	9.52E-12	4.93E-04	%F4197_M5O	
		4.00E-03	C12-MOV-CC-F023	MOTOR OPERATED VALVE F023 FAILS TO OPEN
		3.00E-04	E50-SQV-CC-EQU_ALL	CCF of all components in group 'E50-SQV-CC-EQU'
		1.61E-02	XXX-XHE-FO-LPMAKEUP	OP. FAILS TO RECOG. NEED FOR LOW PRESS. MAKEUP AFTER DEPRESSURIZATION
89	9.52E-12	4.93E-04	%F4197_M5O	
		4.00E-03	C12-MOV-OO-F024	MOTOR OPERATED VALVE F024 FAILS TO CLOSE
		3.00E-04	E50-SQV-CC-EQU_ALL	CCF of all components in group 'E50-SQV-CC-EQU'
		1.61E-02	XXX-XHE-FO-LPMAKEUP	OP. FAILS TO RECOG. NEED FOR LOW PRESS. MAKEUP AFTER DEPRESSURIZATION

Table 12.9-5

Cutset Report (Top 200) for Shutdown Core Damage Frequencies Due to Internal Fires

#	Cutset Prob	Event Prob	Event	Description
90	9.52E-12	4.93E-04	%F4197_M5O	
		4.00E-03	C12-MOV-OO-F062A	MOTOR OPERATED VALVE F062A FAILS TO CLOSE
		3.00E-04	E50-SQV-CC-EQU_ALL	CCF of all components in group 'E50-SQV-CC-EQU'
		1.61E-02	XXX-XHE-FO-LPMAKEUP	OP. FAILS TO RECOG. NEED FOR LOW PRESS. MAKEUP AFTER DEPRESSURIZATION
91	9.52E-12	4.93E-04	%F4197_M5O	
		4.00E-03	C12-MOV-OO-F062B	MOTOR OPERATED VALVE F062B FAILS TO CLOSE
		3.00E-04	E50-SQV-CC-EQU_ALL	CCF of all components in group 'E50-SQV-CC-EQU'
		1.61E-02	XXX-XHE-FO-LPMAKEUP	OP. FAILS TO RECOG. NEED FOR LOW PRESS. MAKEUP AFTER DEPRESSURIZATION
92	8.93E-12	5.70E-04	%FSWYD_M5	
		1.00E-04	C63-CCFSOFTWARE	Common cause failure of software
		5.00E-02	MS-TOP2	TWO DPVs FAIL TO OPEN (MANUAL)
		5.60E-02	R21-DG_-FR-DGA	DIESEL GENERATOR "A" FAILS TO RUN GIVEN START
		5.60E-02	R21-DG_-FR-DGB	DIESEL GENERATOR "B" FAILS TO RUN GIVEN START
93	8.88E-12	2.10E-06	%F1152_F1162_M6U	
		2.63E-04	E50-BV_-OC-F004A	MAINTENANCE VALVE F004A PLUGS/TRANSFERS CLOSED
		1.61E-02	XXX-XHE-FO-LPMAKEUP	OP. FAILS TO RECOG. NEED FOR LOW PRESS. MAKEUP AFTER DEPRESSURIZATION
94	8.88E-12	2.10E-06	%F1152_F1162_M6U	
		2.63E-04	E50-BV_-OC-F004D	MAINTENANCE VALVE F004D PLUGS/TRANSFERS CLOSED
		1.61E-02	XXX-XHE-FO-LPMAKEUP	OP. FAILS TO RECOG. NEED FOR LOW PRESS. MAKEUP AFTER DEPRESSURIZATION
95	8.66E-12	4.93E-04	%F4197_M5O	
		1.50E-04	B21-SQV-CC_ALL	CCF of all components in group 'B21-SQV-CC'
		4.84E-02	C12-BV_-RE-F013A	MISPOSITION OF VALVE F013A
		4.84E-02	C12-BV_-RE-F013B	MISPOSITION OF VALVE F013B
		5.00E-02	MS-TOP2	TWO DPVs FAIL TO OPEN (MANUAL)

Table 12.9-5

Cutset Report (Top 200) for Shutdown Core Damage Frequencies Due to Internal Fires

#	Cutset Prob	Event Prob	Event	Description
96	8.66E-12	4.93E-04	%F4197_M5O	
		1.50E-04	B21-SQV-CC_ALL	CCF of all components in group 'B21-SQV-CC'
		4.84E-02	C12-BV_-RE-F013A	MISPOSITION OF VALVE F013A
		4.84E-02	C12-BV_-RE-F015B	MISPOSITION OF VALVE F015B
		5.00E-02	MS-TOP2	TWO DPVs FAIL TO OPEN (MANUAL)
97	8.66E-12	4.93E-04	%F4197_M5O	
		1.50E-04	B21-SQV-CC_ALL	CCF of all components in group 'B21-SQV-CC'
		4.84E-02	C12-BV_-RE-F013B	MISPOSITION OF VALVE F013B
		4.84E-02	C12-BV_-RE-F015A	MISPOSITION OF VALVE F015A
		5.00E-02	MS-TOP2	TWO DPVs FAIL TO OPEN (MANUAL)
98	8.66E-12	4.93E-04	%F4197_M5O	
		1.50E-04	B21-SQV-CC_ALL	CCF of all components in group 'B21-SQV-CC'
		4.84E-02	C12-BV_-RE-F015A	MISPOSITION OF VALVE F015A
		4.84E-02	C12-BV_-RE-F015B	MISPOSITION OF VALVE F015B
		5.00E-02	MS-TOP2	TWO DPVs FAIL TO OPEN (MANUAL)
99	8.40E-12	1.68E-06	%F1152_F1162_M5O	
		1.00E-04	C63-CCFSOFTWARE	Common cause failure of software
		5.00E-02	MS-TOP2	TWO DPVs FAIL TO OPEN (MANUAL)
100	8.34E-12	4.93E-04	%F4197_M5O	
		4.00E-03	C12-MOV-CC-F023	MOTOR OPERATED VALVE F023 FAILS TO OPEN
		2.63E-04	E50-BV_-OC-F004A	MAINTENANCE VALVE F004A PLUGS/TRANSFERS CLOSED
		1.61E-02	XXX-XHE-FO-LPMAKEUP	OP. FAILS TO RECOG. NEED FOR LOW PRESS. MAKEUP AFTER DEPRESSURIZATION
101	8.34E-12	4.93E-04	%F4197_M5O	
		4.00E-03	C12-MOV-CC-F023	MOTOR OPERATED VALVE F023 FAILS TO OPEN
		2.63E-04	E50-BV_-OC-F004D	MAINTENANCE VALVE F004D PLUGS/TRANSFERS CLOSED
		1.61E-02	XXX-XHE-FO-LPMAKEUP	OP. FAILS TO RECOG. NEED FOR LOW PRESS. MAKEUP AFTER DEPRESSURIZATION

Table 12.9-5

Cutset Report (Top 200) for Shutdown Core Damage Frequencies Due to Internal Fires

#	Cutset Prob	Event Prob	Event	Description
102	8.34E-12	4.93E-04	%F4197_M5O	
		4.00E-03	C12-MOV-OO-F024	MOTOR OPERATED VALVE F024 FAILS TO CLOSE
		2.63E-04	E50-BV_-OC-F004A	MAINTENANCE VALVE F004A PLUGS/TRANSFERS CLOSED
		1.61E-02	XXX-XHE-FO-LPMAKEUP	OP. FAILS TO RECOG. NEED FOR LOW PRESS. MAKEUP AFTER DEPRESSURIZATION
103	8.34E-12	4.93E-04	%F4197_M5O	
		4.00E-03	C12-MOV-OO-F024	MOTOR OPERATED VALVE F024 FAILS TO CLOSE
		2.63E-04	E50-BV_-OC-F004D	MAINTENANCE VALVE F004D PLUGS/TRANSFERS CLOSED
		1.61E-02	XXX-XHE-FO-LPMAKEUP	OP. FAILS TO RECOG. NEED FOR LOW PRESS. MAKEUP AFTER DEPRESSURIZATION
104	8.34E-12	4.93E-04	%F4197_M5O	
		4.00E-03	C12-MOV-OO-F062A	MOTOR OPERATED VALVE F062A FAILS TO CLOSE
		2.63E-04	E50-BV_-OC-F004A	MAINTENANCE VALVE F004A PLUGS/TRANSFERS CLOSED
		1.61E-02	XXX-XHE-FO-LPMAKEUP	OP. FAILS TO RECOG. NEED FOR LOW PRESS. MAKEUP AFTER DEPRESSURIZATION
105	8.34E-12	4.93E-04	%F4197_M5O	
		4.00E-03	C12-MOV-OO-F062A	MOTOR OPERATED VALVE F062A FAILS TO CLOSE
		2.63E-04	E50-BV_-OC-F004D	MAINTENANCE VALVE F004D PLUGS/TRANSFERS CLOSED
		1.61E-02	XXX-XHE-FO-LPMAKEUP	OP. FAILS TO RECOG. NEED FOR LOW PRESS. MAKEUP AFTER DEPRESSURIZATION
106	8.34E-12	4.93E-04	%F4197_M5O	
		4.00E-03	C12-MOV-OO-F062B	MOTOR OPERATED VALVE F062B FAILS TO CLOSE
		2.63E-04	E50-BV_-OC-F004A	MAINTENANCE VALVE F004A PLUGS/TRANSFERS CLOSED
		1.61E-02	XXX-XHE-FO-LPMAKEUP	OP. FAILS TO RECOG. NEED FOR LOW PRESS. MAKEUP AFTER DEPRESSURIZATION
107	8.34E-12	4.93E-04	%F4197_M5O	
		4.00E-03	C12-MOV-OO-F062B	MOTOR OPERATED VALVE F062B FAILS TO CLOSE
		2.63E-04	E50-BV_-OC-F004D	MAINTENANCE VALVE F004D PLUGS/TRANSFERS CLOSED
		1.61E-02	XXX-XHE-FO-LPMAKEUP	OP. FAILS TO RECOG. NEED FOR LOW PRESS. MAKEUP AFTER DEPRESSURIZATION

Table 12.9-5

Cutset Report (Top 200) for Shutdown Core Damage Frequencies Due to Internal Fires

#	Cutset Prob	Event Prob	Event	Description
108	8.11E-12	1.68E-06	%F1152_F1162_M5O	
		3.00E-04	E50-SQV-CC-EQU_ALL	CCF of all components in group 'E50-SQV-CC-EQU'
		1.61E-02	XXX-XHE-FO-LPMAKEUP	OP. FAILS TO RECOG. NEED FOR LOW PRESS. MAKEUP AFTER DEPRESSURIZATION
109	8.08E-12	6.16E-04	%F4197_M6U	
		8.14E-07	R16-BT_-LP-CCFSR_ALL	CCF of all components in group 'R16-BT_-LP-CCFSR'
		1.61E-02	XXX-XHE-FO-LPMAKEUP	OP. FAILS TO RECOG. NEED FOR LOW PRESS. MAKEUP AFTER DEPRESSURIZATION
110	7.64E-12	4.93E-04	%F4197_M5O	
		3.21E-02	C12-XHE-FO-LEVEL2	Operator fails to back-up CRD actuation
		3.00E-05	C63-DTM-FC-ESFLG_ALL	CCF of all components in group 'C63-DTM-FC-ESFLG'
		1.61E-02	XXX-XHE-FO-LPMAKEUP	OP. FAILS TO RECOG. NEED FOR LOW PRESS. MAKEUP AFTER DEPRESSURIZATION
111	7.58E-12	6.16E-04	%F4197_M6U	
		3.21E-02	C12-XHE-FO-LEVEL2	Operator fails to back-up CRD actuation
		2.38E-05	E50-SQV-CC-INJ_1_5	CCF of two components: E50-SQV-CC-INJ-F002A & E50-SQV-CC-INJ-F002E
		1.61E-02	XXX-XHE-FO-LPMAKEUP	OP. FAILS TO RECOG. NEED FOR LOW PRESS. MAKEUP AFTER DEPRESSURIZATION
112	7.58E-12	6.16E-04	%F4197_M6U	
		3.21E-02	C12-XHE-FO-LEVEL2	Operator fails to back-up CRD actuation
		2.38E-05	E50-SQV-CC-INJ_4_8	CCF of two components: E50-SQV-CC-INJ-F002D & E50-SQV-CC-INJ-F002H
		1.61E-02	XXX-XHE-FO-LPMAKEUP	OP. FAILS TO RECOG. NEED FOR LOW PRESS. MAKEUP AFTER DEPRESSURIZATION
113	7.43E-12	1.97E-03	%F4197_M5	
		4.84E-02	C12-BV_-RE-F013A	MISPOSITION OF VALVE F013A
		4.84E-02	C12-BV_-RE-F013B	MISPOSITION OF VALVE F013B
		1.00E-04	C63-CCFSOFTWARE	Common cause failure of software
		1.61E-02	XXX-XHE-FO-LPMAKEUP	OP. FAILS TO RECOG. NEED FOR LOW PRESS. MAKEUP AFTER DEPRESSURIZATION

Table 12.9-5

Cutset Report (Top 200) for Shutdown Core Damage Frequencies Due to Internal Fires

#	Cutset Prob	Event Prob	Event	Description
114	7.43E-12	1.97E-03	%F4197_M5	
		4.84E-02	C12-BV_-RE-F013A	MISPOSITION OF VALVE F013A
		4.84E-02	C12-BV_-RE-F015B	MISPOSITION OF VALVE F015B
		1.00E-04	C63-CCFSOFTWARE	Common cause failure of software
		1.61E-02	XXX-XHE-FO-LPMAKEUP	OP. FAILS TO RECOG. NEED FOR LOW PRESS. MAKEUP AFTER DEPRESSURIZATION
115	7.43E-12	1.97E-03	%F4197_M5	
		4.84E-02	C12-BV_-RE-F013B	MISPOSITION OF VALVE F013B
		4.84E-02	C12-BV_-RE-F015A	MISPOSITION OF VALVE F015A
		1.00E-04	C63-CCFSOFTWARE	Common cause failure of software
		1.61E-02	XXX-XHE-FO-LPMAKEUP	OP. FAILS TO RECOG. NEED FOR LOW PRESS. MAKEUP AFTER DEPRESSURIZATION
116	7.43E-12	1.97E-03	%F4197_M5	
		4.84E-02	C12-BV_-RE-F015A	MISPOSITION OF VALVE F015A
		4.84E-02	C12-BV_-RE-F015B	MISPOSITION OF VALVE F015B
		1.00E-04	C63-CCFSOFTWARE	Common cause failure of software
		1.61E-02	XXX-XHE-FO-LPMAKEUP	OP. FAILS TO RECOG. NEED FOR LOW PRESS. MAKEUP AFTER DEPRESSURIZATION
117	7.40E-12	4.93E-04	%F4197_M5O	
		1.50E-04	B21-SQV-CC_ALL	CCF of all components in group 'B21-SQV-CC'
		2.00E-03	C12-ACV-OO-F012	AIR OPERATED VALVE F012 FAILS TO CLOSE
		5.00E-02	MS-TOP2	TWO DPVs FAIL TO OPEN (MANUAL)
118	7.40E-12	4.93E-04	%F4197_M5O	
		1.50E-04	B21-SQV-CC_ALL	CCF of all components in group 'B21-SQV-CC'
		2.00E-03	C12-ACV-OO-F030	AIR OPERATED VALVE F030 FAILS TO CLOSE
		5.00E-02	MS-TOP2	TWO DPVs FAIL TO OPEN (MANUAL)
119	7.34E-12	5.70E-04	%FSWYD_M5	
		1.00E-04	C63-CCFSOFTWARE	Common cause failure of software
		5.00E-02	MS-TOP2	TWO DPVs FAIL TO OPEN (MANUAL)
		5.60E-02	R21-DG_-FR-DGA	DIESEL GENERATOR "A" FAILS TO RUN GIVEN START
		4.60E-02	R21-DG_-TM-DGB	STANDBY DIESEL GENERATOR "B" IN MAINTENANCE

Table 12.9-5

Cutset Report (Top 200) for Shutdown Core Damage Frequencies Due to Internal Fires

#	Cutset Prob	Event Prob	Event	Description
120	7.34E-12	5.70E-04	%FSWYD_M5	
		1.00E-04	C63-CCFSOFTWARE	Common cause failure of software
		5.00E-02	MS-TOP2	TWO DPVs FAIL TO OPEN (MANUAL)
		5.60E-02	R21-DG_-FR-DGB	DIESEL GENERATOR "B" FAILS TO RUN GIVEN START
		4.60E-02	R21-DG_-TM-DGA	STANDBY DIESEL GENERATOR "A" IN MAINTENANCE
121	7.11E-12	1.68E-06	%F1152_F1162_M5O	
		2.63E-04	E50-BV_-OC-F004A	MAINTENANCE VALVE F004A PLUGS/TRANSFERS CLOSED
		1.61E-02	XXX-XHE-FO-LPMAKEUP	OP. FAILS TO RECOG. NEED FOR LOW PRESS. MAKEUP AFTER DEPRESSURIZATION
122	7.11E-12	1.68E-06	%F1152_F1162_M5O	
		2.63E-04	E50-BV_-OC-F004D	MAINTENANCE VALVE F004D PLUGS/TRANSFERS CLOSED
		1.61E-02	XXX-XHE-FO-LPMAKEUP	OP. FAILS TO RECOG. NEED FOR LOW PRESS. MAKEUP AFTER DEPRESSURIZATION
123	7.09E-12	1.97E-03	%F4197_M5	
		4.00E-03	C12-MOV-CC-F023	MOTOR OPERATED VALVE F023 FAILS TO OPEN
		1.80E-05	C63-LOG-FC-ESFLG_ALL	CCF of all components in group 'C63-LOG-FC-ESFLG'
		5.00E-02	MS-TOP2	TWO DPVs FAIL TO OPEN (MANUAL)
124	7.09E-12	1.97E-03	%F4197_M5	
		4.00E-03	C12-MOV-OO-F024	MOTOR OPERATED VALVE F024 FAILS TO CLOSE
		1.80E-05	C63-LOG-FC-ESFLG_ALL	CCF of all components in group 'C63-LOG-FC-ESFLG'
		5.00E-02	MS-TOP2	TWO DPVs FAIL TO OPEN (MANUAL)
125	7.09E-12	1.97E-03	%F4197_M5	
		4.00E-03	C12-MOV-OO-F062A	MOTOR OPERATED VALVE F062A FAILS TO CLOSE
		1.80E-05	C63-LOG-FC-ESFLG_ALL	CCF of all components in group 'C63-LOG-FC-ESFLG'
		5.00E-02	MS-TOP2	TWO DPVs FAIL TO OPEN (MANUAL)
126	7.09E-12	1.97E-03	%F4197_M5	
		4.00E-03	C12-MOV-OO-F062B	MOTOR OPERATED VALVE F062B FAILS TO CLOSE
		1.80E-05	C63-LOG-FC-ESFLG_ALL	CCF of all components in group 'C63-LOG-FC-ESFLG'
		5.00E-02	MS-TOP2	TWO DPVs FAIL TO OPEN (MANUAL)

Table 12.9-5

Cutset Report (Top 200) for Shutdown Core Damage Frequencies Due to Internal Fires

#	Cutset Prob	Event Prob	Event	Description
127	6.97E-12	6.16E-04	%F4197_M6U	
		4.84E-02	C12-BV_-RE-F013A	MISPOSITION OF VALVE F013A
		4.84E-02	C12-BV_-RE-F013B	MISPOSITION OF VALVE F013B
		3.00E-04	E50-SQV-CC-EQU_ALL	CCF of all components in group 'E50-SQV-CC-EQU'
		1.61E-02	XXX-XHE-FO-LPMAKEUP	OP. FAILS TO RECOG. NEED FOR LOW PRESS. MAKEUP AFTER DEPRESSURIZATION
128	6.97E-12	6.16E-04	%F4197_M6U	
		4.84E-02	C12-BV_-RE-F013A	MISPOSITION OF VALVE F013A
		4.84E-02	C12-BV_-RE-F015B	MISPOSITION OF VALVE F015B
		3.00E-04	E50-SQV-CC-EQU_ALL	CCF of all components in group 'E50-SQV-CC-EQU'
		1.61E-02	XXX-XHE-FO-LPMAKEUP	OP. FAILS TO RECOG. NEED FOR LOW PRESS. MAKEUP AFTER DEPRESSURIZATION
129	6.97E-12	6.16E-04	%F4197_M6U	
		4.84E-02	C12-BV_-RE-F013B	MISPOSITION OF VALVE F013B
		4.84E-02	C12-BV_-RE-F015A	MISPOSITION OF VALVE F015A
		3.00E-04	E50-SQV-CC-EQU_ALL	CCF of all components in group 'E50-SQV-CC-EQU'
		1.61E-02	XXX-XHE-FO-LPMAKEUP	OP. FAILS TO RECOG. NEED FOR LOW PRESS. MAKEUP AFTER DEPRESSURIZATION
130	6.97E-12	6.16E-04	%F4197_M6U	
		4.84E-02	C12-BV_-RE-F015A	MISPOSITION OF VALVE F015A
		4.84E-02	C12-BV_-RE-F015B	MISPOSITION OF VALVE F015B
		3.00E-04	E50-SQV-CC-EQU_ALL	CCF of all components in group 'E50-SQV-CC-EQU'
		1.61E-02	XXX-XHE-FO-LPMAKEUP	OP. FAILS TO RECOG. NEED FOR LOW PRESS. MAKEUP AFTER DEPRESSURIZATION
131	6.92E-12	1.97E-03	%F4197_M5	
		4.84E-02	C12-BV_-RE-F013A	MISPOSITION OF VALVE F013A
		4.84E-02	C12-BV_-RE-F013B	MISPOSITION OF VALVE F013B
		3.00E-05	C63-DTM-FC-ESFLG_ALL	CCF of all components in group 'C63-DTM-FC-ESFLG'
		5.00E-02	MS-TOP2	TWO DPVs FAIL TO OPEN (MANUAL)

Table 12.9-5

Cutset Report (Top 200) for Shutdown Core Damage Frequencies Due to Internal Fires

#	Cutset Prob	Event Prob	Event	Description
132	6.92E-12	1.97E-03	%F4197_M5	
		4.84E-02	C12-BV_-RE-F013A	MISPOSITION OF VALVE F013A
		4.84E-02	C12-BV_-RE-F015B	MISPOSITION OF VALVE F015B
		3.00E-05	C63-DTM-FC-ESFLG_ALL	CCF of all components in group 'C63-DTM-FC-ESFLG'
		5.00E-02	MS-TOP2	TWO DPVs FAIL TO OPEN (MANUAL)
133	6.92E-12	1.97E-03	%F4197_M5	
		4.84E-02	C12-BV_-RE-F013B	MISPOSITION OF VALVE F013B
		4.84E-02	C12-BV_-RE-F015A	MISPOSITION OF VALVE F015A
		3.00E-05	C63-DTM-FC-ESFLG_ALL	CCF of all components in group 'C63-DTM-FC-ESFLG'
		5.00E-02	MS-TOP2	TWO DPVs FAIL TO OPEN (MANUAL)
134	6.92E-12	1.97E-03	%F4197_M5	
		4.84E-02	C12-BV_-RE-F015A	MISPOSITION OF VALVE F015A
		4.84E-02	C12-BV_-RE-F015B	MISPOSITION OF VALVE F015B
		3.00E-05	C63-DTM-FC-ESFLG_ALL	CCF of all components in group 'C63-DTM-FC-ESFLG'
		5.00E-02	MS-TOP2	TWO DPVs FAIL TO OPEN (MANUAL)
135	6.84E-12	9.12E-07	%F4250_F4260_M5O	
		1.50E-04	B21-SQV-CC_ALL	CCF of all components in group 'B21-SQV-CC'
		5.00E-02	MS-TOP2	TWO DPVs FAIL TO OPEN (MANUAL)
136	6.46E-12	4.93E-04	%F4197_M5O	
		8.14E-07	R16-BT_-LP-CCFSR_ALL	CCF of all components in group 'R16-BT_-LP-CCFSR'
		1.61E-02	XXX-XHE-FO-LPMAKEUP	OP. FAILS TO RECOG. NEED FOR LOW PRESS. MAKEUP AFTER DEPRESSURIZATION
137	6.34E-12	1.97E-03	%F4197_M5	
		2.00E-03	C12-ACV-OO-F012	AIR OPERATED VALVE F012 FAILS TO CLOSE
		1.00E-04	C63-CCFSOFTWARE	Common cause failure of software
		1.61E-02	XXX-XHE-FO-LPMAKEUP	OP. FAILS TO RECOG. NEED FOR LOW PRESS. MAKEUP AFTER DEPRESSURIZATION

Table 12.9-5

Cutset Report (Top 200) for Shutdown Core Damage Frequencies Due to Internal Fires

#	Cutset Prob	Event Prob	Event	Description
138	6.34E-12	1.97E-03	%F4197_M5	
		2.00E-03	C12-ACV-OO-F030	AIR OPERATED VALVE F030 FAILS TO CLOSE
		1.00E-04	C63-CCFSOFTWARE	Common cause failure of software
		1.61E-02	XXX-XHE-FO-LPMAKEUP	OP. FAILS TO RECOG. NEED FOR LOW PRESS. MAKEUP AFTER DEPRESSURIZATION
139	6.10E-12	6.16E-04	%F4197_M6U	
		4.84E-02	C12-BV_-RE-F013A	MISPOSITION OF VALVE F013A
		4.84E-02	C12-BV_-RE-F013B	MISPOSITION OF VALVE F013B
		2.63E-04	E50-BV_-OC-F004A	MAINTENANCE VALVE F004A PLUGS/TRANSFERS CLOSED
		1.61E-02	XXX-XHE-FO-LPMAKEUP	OP. FAILS TO RECOG. NEED FOR LOW PRESS. MAKEUP AFTER DEPRESSURIZATION
140	6.10E-12	6.16E-04	%F4197_M6U	
		4.84E-02	C12-BV_-RE-F013A	MISPOSITION OF VALVE F013A
		4.84E-02	C12-BV_-RE-F013B	MISPOSITION OF VALVE F013B
		2.63E-04	E50-BV_-OC-F004D	MAINTENANCE VALVE F004D PLUGS/TRANSFERS CLOSED
		1.61E-02	XXX-XHE-FO-LPMAKEUP	OP. FAILS TO RECOG. NEED FOR LOW PRESS. MAKEUP AFTER DEPRESSURIZATION
141	6.10E-12	6.16E-04	%F4197_M6U	
		4.84E-02	C12-BV_-RE-F013A	MISPOSITION OF VALVE F013A
		4.84E-02	C12-BV_-RE-F015B	MISPOSITION OF VALVE F015B
		2.63E-04	E50-BV_-OC-F004A	MAINTENANCE VALVE F004A PLUGS/TRANSFERS CLOSED
		1.61E-02	XXX-XHE-FO-LPMAKEUP	OP. FAILS TO RECOG. NEED FOR LOW PRESS. MAKEUP AFTER DEPRESSURIZATION
142	6.10E-12	6.16E-04	%F4197_M6U	
		4.84E-02	C12-BV_-RE-F013A	MISPOSITION OF VALVE F013A
		4.84E-02	C12-BV_-RE-F015B	MISPOSITION OF VALVE F015B
		2.63E-04	E50-BV_-OC-F004D	MAINTENANCE VALVE F004D PLUGS/TRANSFERS CLOSED
		1.61E-02	XXX-XHE-FO-LPMAKEUP	OP. FAILS TO RECOG. NEED FOR LOW PRESS. MAKEUP AFTER DEPRESSURIZATION

Table 12.9-5

Cutset Report (Top 200) for Shutdown Core Damage Frequencies Due to Internal Fires

#	Cutset Prob	Event Prob	Event	Description
143	6.10E-12	6.16E-04	%F4197_M6U	
		4.84E-02	C12-BV_-RE-F013B	MISPOSITION OF VALVE F013B
		4.84E-02	C12-BV_-RE-F015A	MISPOSITION OF VALVE F015A
		2.63E-04	E50-BV_-OC-F004A	MAINTENANCE VALVE F004A PLUGS/TRANSFERS CLOSED
		1.61E-02	XXX-XHE-FO-LPMAKEUP	OP. FAILS TO RECOG. NEED FOR LOW PRESS. MAKEUP AFTER DEPRESSURIZATION
144	6.10E-12	6.16E-04	%F4197_M6U	
		4.84E-02	C12-BV_-RE-F013B	MISPOSITION OF VALVE F013B
		4.84E-02	C12-BV_-RE-F015A	MISPOSITION OF VALVE F015A
		2.63E-04	E50-BV_-OC-F004D	MAINTENANCE VALVE F004D PLUGS/TRANSFERS CLOSED
		1.61E-02	XXX-XHE-FO-LPMAKEUP	OP. FAILS TO RECOG. NEED FOR LOW PRESS. MAKEUP AFTER DEPRESSURIZATION
145	6.10E-12	6.16E-04	%F4197_M6U	
		4.84E-02	C12-BV_-RE-F015A	MISPOSITION OF VALVE F015A
		4.84E-02	C12-BV_-RE-F015B	MISPOSITION OF VALVE F015B
		2.63E-04	E50-BV_-OC-F004A	MAINTENANCE VALVE F004A PLUGS/TRANSFERS CLOSED
		1.61E-02	XXX-XHE-FO-LPMAKEUP	OP. FAILS TO RECOG. NEED FOR LOW PRESS. MAKEUP AFTER DEPRESSURIZATION
146	6.10E-12	6.16E-04	%F4197_M6U	
		4.84E-02	C12-BV_-RE-F015A	MISPOSITION OF VALVE F015A
		4.84E-02	C12-BV_-RE-F015B	MISPOSITION OF VALVE F015B
		2.63E-04	E50-BV_-OC-F004D	MAINTENANCE VALVE F004D PLUGS/TRANSFERS CLOSED
		1.61E-02	XXX-XHE-FO-LPMAKEUP	OP. FAILS TO RECOG. NEED FOR LOW PRESS. MAKEUP AFTER DEPRESSURIZATION
147	6.07E-12	4.93E-04	%F4197_M5O	
		3.21E-02	C12-XHE-FO-LEVEL2	Operator fails to back-up CRD actuation
		2.38E-05	E50-SQV-CC-INJ_1_5	CCF of two components: E50-SQV-CC-INJ-F002A & E50-SQV-CC-INJ-F002E
		1.61E-02	XXX-XHE-FO-LPMAKEUP	OP. FAILS TO RECOG. NEED FOR LOW PRESS. MAKEUP AFTER DEPRESSURIZATION

Table 12.9-5

Cutset Report (Top 200) for Shutdown Core Damage Frequencies Due to Internal Fires

#	Cutset Prob	Event Prob	Event	Description
148	6.07E-12	4.93E-04	%F4197_M5O	
		3.21E-02	C12-XHE-FO-LEVEL2	Operator fails to back-up CRD actuation
		2.38E-05	E50-SQV-CC-INJ_4_8	CCF of two components: E50-SQV-CC-INJ-F002D & E50-SQV-CC-INJ-F002H
		1.61E-02	XXX-XHE-FO-LPMAKEUP	OP. FAILS TO RECOG. NEED FOR LOW PRESS. MAKEUP AFTER DEPRESSURIZATION
149	6.05E-12	6.72E-06	%F1152_F1162_M5	
		1.80E-05	C63-LOG-FC-ESFLG_ALL	CCF of all components in group 'C63-LOG-FC-ESFLG'
		5.00E-02	MS-TOP2	TWO DPVs FAIL TO OPEN (MANUAL)
150	5.95E-12	6.16E-04	%F4197_M6U	
		2.00E-03	C12-ACV-OO-F012	AIR OPERATED VALVE F012 FAILS TO CLOSE
		3.00E-04	E50-SQV-CC-EQU_ALL	CCF of all components in group 'E50-SQV-CC-EQU'
		1.61E-02	XXX-XHE-FO-LPMAKEUP	OP. FAILS TO RECOG. NEED FOR LOW PRESS. MAKEUP AFTER DEPRESSURIZATION
151	5.95E-12	6.16E-04	%F4197_M6U	
		2.00E-03	C12-ACV-OO-F030	AIR OPERATED VALVE F030 FAILS TO CLOSE
		3.00E-04	E50-SQV-CC-EQU_ALL	CCF of all components in group 'E50-SQV-CC-EQU'
		1.61E-02	XXX-XHE-FO-LPMAKEUP	OP. FAILS TO RECOG. NEED FOR LOW PRESS. MAKEUP AFTER DEPRESSURIZATION
152	5.95E-12	6.16E-04	%F4197_M6U	
		4.00E-03	C12-MOV-CC-F023	MOTOR OPERATED VALVE F023 FAILS TO OPEN
		1.50E-04	E50-SQV-CC-INJ_ALL	CCF of all components in group 'E50-SQV-CC-INJ'
		1.61E-02	XXX-XHE-FO-LPMAKEUP	OP. FAILS TO RECOG. NEED FOR LOW PRESS. MAKEUP AFTER DEPRESSURIZATION
153	5.95E-12	6.16E-04	%F4197_M6U	
		4.00E-03	C12-MOV-OO-F024	MOTOR OPERATED VALVE F024 FAILS TO CLOSE
		1.50E-04	E50-SQV-CC-INJ_ALL	CCF of all components in group 'E50-SQV-CC-INJ'
		1.61E-02	XXX-XHE-FO-LPMAKEUP	OP. FAILS TO RECOG. NEED FOR LOW PRESS. MAKEUP AFTER DEPRESSURIZATION

Table 12.9-5

Cutset Report (Top 200) for Shutdown Core Damage Frequencies Due to Internal Fires

#	Cutset Prob	Event Prob	Event	Description
154	5.95E-12	6.16E-04	%F4197_M6U	
		4.00E-03	C12-MOV-OO-F062A	MOTOR OPERATED VALVE F062A FAILS TO CLOSE
		1.50E-04	E50-SQV-CC-INJ_ALL	CCF of all components in group 'E50-SQV-CC-INJ'
		1.61E-02	XXX-XHE-FO-LPMAKEUP	OP. FAILS TO RECOG. NEED FOR LOW PRESS. MAKEUP AFTER DEPRESSURIZATION
155	5.95E-12	6.16E-04	%F4197_M6U	
		4.00E-03	C12-MOV-OO-F062B	MOTOR OPERATED VALVE F062B FAILS TO CLOSE
		1.50E-04	E50-SQV-CC-INJ_ALL	CCF of all components in group 'E50-SQV-CC-INJ'
		1.61E-02	XXX-XHE-FO-LPMAKEUP	OP. FAILS TO RECOG. NEED FOR LOW PRESS. MAKEUP AFTER DEPRESSURIZATION
156	5.91E-12	1.97E-03	%F4197_M5	
		2.00E-03	C12-ACV-OO-F012	AIR OPERATED VALVE F012 FAILS TO CLOSE
		3.00E-05	C63-DTM-FC-ESFLG_ALL	CCF of all components in group 'C63-DTM-FC-ESFLG'
		5.00E-02	MS-TOP2	TWO DPVs FAIL TO OPEN (MANUAL)
157	5.91E-12	1.97E-03	%F4197_M5	
		2.00E-03	C12-ACV-OO-F030	AIR OPERATED VALVE F030 FAILS TO CLOSE
		3.00E-05	C63-DTM-FC-ESFLG_ALL	CCF of all components in group 'C63-DTM-FC-ESFLG'
		5.00E-02	MS-TOP2	TWO DPVs FAIL TO OPEN (MANUAL)
158	5.88E-12	1.97E-03	%F4197_M5	
		3.21E-02	C12-XHE-FO-LEVEL2	Operator fails to back-up CRD actuation
		1.86E-06	C63-LDD-FC-ESFLOADS	CCF OF ALL ESF LOAD DRIVERS
		5.00E-02	MS-TOP2	TWO DPVs FAIL TO OPEN (MANUAL)
159	5.88E-12	3.65E-06	%F4250_F4260_M5	
		1.00E-04	C63-CCFSOFTWARE	Common cause failure of software
		1.61E-02	XXX-XHE-FO-LPMAKEUP	OP. FAILS TO RECOG. NEED FOR LOW PRESS. MAKEUP AFTER DEPRESSURIZATION

Table 12.9-5

Cutset Report (Top 200) for Shutdown Core Damage Frequencies Due to Internal Fires

#	Cutset Prob	Event Prob	Event	Description
160	5.86E-12	1.97E-03	%F4197_M5	
		1.50E-04	B21-SQV-CC_ALL	CCF of all components in group 'B21-SQV-CC'
		3.84E-02	B32-TM-LOOPA-IND	ICS LOOP A IN TEST OR MAINTENANCE BY ITSELF
		3.21E-02	C12-XHE-FO-LEVEL2	Operator fails to back-up CRD actuation
		1.61E-02	XXX-XHE-FO-LPMAKEUP	OP. FAILS TO RECOG. NEED FOR LOW PRESS. MAKEUP AFTER DEPRESSURIZATION
161	5.86E-12	1.97E-03	%F4197_M5	
		1.50E-04	B21-SQV-CC_ALL	CCF of all components in group 'B21-SQV-CC'
		3.84E-02	B32-TM-LOOPB-IND	ICS LOOP B IN TEST OR MAINTENANCE BY ITSELF
		3.21E-02	C12-XHE-FO-LEVEL2	Operator fails to back-up CRD actuation
		1.61E-02	XXX-XHE-FO-LPMAKEUP	OP. FAILS TO RECOG. NEED FOR LOW PRESS. MAKEUP AFTER DEPRESSURIZATION
162	5.86E-12	1.97E-03	%F4197_M5	
		3.84E-02	B32-TM-LOOPA-IND	ICS LOOP A IN TEST OR MAINTENANCE BY ITSELF
		3.21E-02	C12-XHE-FO-LEVEL2	Operator fails to back-up CRD actuation
		1.50E-04	E50-SQV-CC-INJ_ALL	CCF of all components in group 'E50-SQV-CC-INJ'
		1.61E-02	XXX-XHE-FO-LPMAKEUP	OP. FAILS TO RECOG. NEED FOR LOW PRESS. MAKEUP AFTER DEPRESSURIZATION
163	5.86E-12	1.97E-03	%F4197_M5	
		3.84E-02	B32-TM-LOOPB-IND	ICS LOOP B IN TEST OR MAINTENANCE BY ITSELF
		3.21E-02	C12-XHE-FO-LEVEL2	Operator fails to back-up CRD actuation
		1.50E-04	E50-SQV-CC-INJ_ALL	CCF of all components in group 'E50-SQV-CC-INJ'
		1.61E-02	XXX-XHE-FO-LPMAKEUP	OP. FAILS TO RECOG. NEED FOR LOW PRESS. MAKEUP AFTER DEPRESSURIZATION
164	5.77E-12	4.93E-04	%F4197_M5O	
		4.84E-02	C12-BV_-RE-F013A	MISPOSITION OF VALVE F013A
		4.84E-02	C12-BV_-RE-F013B	MISPOSITION OF VALVE F013B
		1.00E-04	C63-CCFSOFTWARE	Common cause failure of software
		5.00E-02	MS-TOP2	TWO DPVs FAIL TO OPEN (MANUAL)

Table 12.9-5

Cutset Report (Top 200) for Shutdown Core Damage Frequencies Due to Internal Fires

#	Cutset Prob	Event Prob	Event	Description
165	5.77E-12	4.93E-04	%F4197_M5O	
		4.84E-02	C12-BV_-RE-F013A	MISPOSITION OF VALVE F013A
		4.84E-02	C12-BV_-RE-F015B	MISPOSITION OF VALVE F015B
		1.00E-04	C63-CCFSOFTWARE	Common cause failure of software
		5.00E-02	MS-TOP2	TWO DPVs FAIL TO OPEN (MANUAL)
166	5.77E-12	4.93E-04	%F4197_M5O	
		4.84E-02	C12-BV_-RE-F013B	MISPOSITION OF VALVE F013B
		4.84E-02	C12-BV_-RE-F015A	MISPOSITION OF VALVE F015A
		1.00E-04	C63-CCFSOFTWARE	Common cause failure of software
		5.00E-02	MS-TOP2	TWO DPVs FAIL TO OPEN (MANUAL)
167	5.77E-12	4.93E-04	%F4197_M5O	
		4.84E-02	C12-BV_-RE-F015A	MISPOSITION OF VALVE F015A
		4.84E-02	C12-BV_-RE-F015B	MISPOSITION OF VALVE F015B
		1.00E-04	C63-CCFSOFTWARE	Common cause failure of software
		5.00E-02	MS-TOP2	TWO DPVs FAIL TO OPEN (MANUAL)
168	5.73E-12	6.16E-04	%F4197_M6U	
		3.21E-02	C12-XHE-FO-LEVEL2	Operator fails to back-up CRD actuation
		1.80E-05	C63-LOG-FC-ESFLG_ALL	CCF of all components in group 'C63-LOG-FC-ESFLG'
		1.61E-02	XXX-XHE-FO-LPMAKEUP	OP. FAILS TO RECOG. NEED FOR LOW PRESS. MAKEUP AFTER DEPRESSURIZATION
169	5.70E-12	5.70E-04	%FSWYD_M5	
		1.00E-04	C63-CCFSOFTWARE	Common cause failure of software
		5.00E-02	MS-TOP2	TWO DPVs FAIL TO OPEN (MANUAL)
		2.00E-03	P21-ACV-OO-F0004	AIR OPERATED VALVE F0004 FAILS TO CLOSE
170	5.70E-12	5.70E-04	%FSWYD_M5	
		1.00E-04	C63-CCFSOFTWARE	Common cause failure of software
		5.00E-02	MS-TOP2	TWO DPVs FAIL TO OPEN (MANUAL)
		2.00E-03	P21-ACV-OO-F0027	AIR OPERATED VALVE F0027 FAILS TO CLOSE

Table 12.9-5

Cutset Report (Top 200) for Shutdown Core Damage Frequencies Due to Internal Fires

#	Cutset Prob	Event Prob	Event	Description
171	5.70E-12	5.70E-04	%FSWYD_M5	
		1.00E-04	C63-CCFSOFTWARE	Common cause failure of software
		5.00E-02	MS-TOP2	TWO DPVs FAIL TO OPEN (MANUAL)
		2.00E-03	P21-ACV-OO-F0061	AIR OPERATED VALVE F0061 FAILS TO CLOSE
172	5.58E-12	4.93E-04	%F4197_M5O	
		4.84E-02	C12-BV_-RE-F013A	MISPOSITION OF VALVE F013A
		4.84E-02	C12-BV_-RE-F013B	MISPOSITION OF VALVE F013B
		3.00E-04	E50-SQV-CC-EQU_ALL	CCF of all components in group 'E50-SQV-CC-EQU'
		1.61E-02	XXX-XHE-FO-LPMAKEUP	OP. FAILS TO RECOG. NEED FOR LOW PRESS. MAKEUP AFTER DEPRESSURIZATION
173	5.58E-12	4.93E-04	%F4197_M5O	
		4.84E-02	C12-BV_-RE-F013A	MISPOSITION OF VALVE F013A
		4.84E-02	C12-BV_-RE-F015B	MISPOSITION OF VALVE F015B
		3.00E-04	E50-SQV-CC-EQU_ALL	CCF of all components in group 'E50-SQV-CC-EQU'
		1.61E-02	XXX-XHE-FO-LPMAKEUP	OP. FAILS TO RECOG. NEED FOR LOW PRESS. MAKEUP AFTER DEPRESSURIZATION
174	5.58E-12	4.93E-04	%F4197_M5O	
		4.84E-02	C12-BV_-RE-F013B	MISPOSITION OF VALVE F013B
		4.84E-02	C12-BV_-RE-F015A	MISPOSITION OF VALVE F015A
		3.00E-04	E50-SQV-CC-EQU_ALL	CCF of all components in group 'E50-SQV-CC-EQU'
		1.61E-02	XXX-XHE-FO-LPMAKEUP	OP. FAILS TO RECOG. NEED FOR LOW PRESS. MAKEUP AFTER DEPRESSURIZATION
175	5.58E-12	4.93E-04	%F4197_M5O	
		4.84E-02	C12-BV_-RE-F015A	MISPOSITION OF VALVE F015A
		4.84E-02	C12-BV_-RE-F015B	MISPOSITION OF VALVE F015B
		3.00E-04	E50-SQV-CC-EQU_ALL	CCF of all components in group 'E50-SQV-CC-EQU'
		1.61E-02	XXX-XHE-FO-LPMAKEUP	OP. FAILS TO RECOG. NEED FOR LOW PRESS. MAKEUP AFTER DEPRESSURIZATION

Table 12.9-5

Cutset Report (Top 200) for Shutdown Core Damage Frequencies Due to Internal Fires

#	Cutset Prob	Event Prob	Event	Description
176	5.51E-12	1.14E-06	%F4250_F4260_M6U	
		3.00E-04	E50-SQV-CC-EQU_ALL	CCF of all components in group 'E50-SQV-CC-EQU'
		1.61E-02	XXX-XHE-FO-LPMAKEUP	OP. FAILS TO RECOG. NEED FOR LOW PRESS. MAKEUP AFTER DEPRESSURIZATION
177	5.48E-12	3.65E-06	%F4250_F4260_M5	
		3.00E-05	C63-DTM-FC-ESFLG_ALL	CCF of all components in group 'C63-DTM-FC-ESFLG'
		5.00E-02	MS-TOP2	TWO DPVs FAIL TO OPEN (MANUAL)
178	5.47E-12	6.16E-04	%F4197_M6U	
		3.21E-02	C12-XHE-FO-LEVEL2	Operator fails to back-up CRD actuation
		1.72E-05	E50-UV_-CC-INJ_ALL	CCF of all components in group 'E50-UV_-CC-INJ'
		1.61E-02	XXX-XHE-FO-LPMAKEUP	OP. FAILS TO RECOG. NEED FOR LOW PRESS. MAKEUP AFTER DEPRESSURIZATION
179	5.21E-12	6.16E-04	%F4197_M6U	
		2.00E-03	C12-ACV-OO-F012	AIR OPERATED VALVE F012 FAILS TO CLOSE
		2.63E-04	E50-BV_-OC-F004A	MAINTENANCE VALVE F004A PLUGS/TRANSFERS CLOSED
		1.61E-02	XXX-XHE-FO-LPMAKEUP	OP. FAILS TO RECOG. NEED FOR LOW PRESS. MAKEUP AFTER DEPRESSURIZATION
180	5.21E-12	6.16E-04	%F4197_M6U	
		2.00E-03	C12-ACV-OO-F012	AIR OPERATED VALVE F012 FAILS TO CLOSE
		2.63E-04	E50-BV_-OC-F004D	MAINTENANCE VALVE F004D PLUGS/TRANSFERS CLOSED
		1.61E-02	XXX-XHE-FO-LPMAKEUP	OP. FAILS TO RECOG. NEED FOR LOW PRESS. MAKEUP AFTER DEPRESSURIZATION
181	5.21E-12	6.16E-04	%F4197_M6U	
		2.00E-03	C12-ACV-OO-F030	AIR OPERATED VALVE F030 FAILS TO CLOSE
		2.63E-04	E50-BV_-OC-F004A	MAINTENANCE VALVE F004A PLUGS/TRANSFERS CLOSED
		1.61E-02	XXX-XHE-FO-LPMAKEUP	OP. FAILS TO RECOG. NEED FOR LOW PRESS. MAKEUP AFTER DEPRESSURIZATION
182	5.21E-12	6.16E-04	%F4197_M6U	
		2.00E-03	C12-ACV-OO-F030	AIR OPERATED VALVE F030 FAILS TO CLOSE
		2.63E-04	E50-BV_-OC-F004D	MAINTENANCE VALVE F004D PLUGS/TRANSFERS CLOSED
		1.61E-02	XXX-XHE-FO-LPMAKEUP	OP. FAILS TO RECOG. NEED FOR LOW PRESS. MAKEUP AFTER DEPRESSURIZATION

Table 12.9-5

Cutset Report (Top 200) for Shutdown Core Damage Frequencies Due to Internal Fires

#	Cutset Prob	Event Prob	Event	Description
183	5.07E-12	2.10E-06	%F1152_F1162_M6U	
		1.50E-04	E50-SQV-CC-INJ_ALL	CCF of all components in group 'E50-SQV-CC-INJ'
		1.61E-02	XXX-XHE-FO-LPMAKEUP	OP. FAILS TO RECOG. NEED FOR LOW PRESS. MAKEUP AFTER DEPRESSURIZATION
184	4.93E-12	4.93E-04	%F4197_M5O	
		2.00E-03	C12-ACV-OO-F012	AIR OPERATED VALVE F012 FAILS TO CLOSE
		1.00E-04	C63-CCFSOFTWARE	Common cause failure of software
		5.00E-02	MS-TOP2	TWO DPVs FAIL TO OPEN (MANUAL)
185	4.93E-12	4.93E-04	%F4197_M5O	
		2.00E-03	C12-ACV-OO-F030	AIR OPERATED VALVE F030 FAILS TO CLOSE
		1.00E-04	C63-CCFSOFTWARE	Common cause failure of software
		5.00E-02	MS-TOP2	TWO DPVs FAIL TO OPEN (MANUAL)
186	4.89E-12	4.93E-04	%F4197_M5O	
		4.84E-02	C12-BV_-RE-F013A	MISPOSITION OF VALVE F013A
		4.84E-02	C12-BV_-RE-F013B	MISPOSITION OF VALVE F013B
		2.63E-04	E50-BV_-OC-F004A	MAINTENANCE VALVE F004A PLUGS/TRANSFERS CLOSED
		1.61E-02	XXX-XHE-FO-LPMAKEUP	OP. FAILS TO RECOG. NEED FOR LOW PRESS. MAKEUP AFTER DEPRESSURIZATION
187	4.89E-12	4.93E-04	%F4197_M5O	
		4.84E-02	C12-BV_-RE-F013A	MISPOSITION OF VALVE F013A
		4.84E-02	C12-BV_-RE-F013B	MISPOSITION OF VALVE F013B
		2.63E-04	E50-BV_-OC-F004D	MAINTENANCE VALVE F004D PLUGS/TRANSFERS CLOSED
		1.61E-02	XXX-XHE-FO-LPMAKEUP	OP. FAILS TO RECOG. NEED FOR LOW PRESS. MAKEUP AFTER DEPRESSURIZATION
188	4.89E-12	4.93E-04	%F4197_M5O	
		4.84E-02	C12-BV_-RE-F013A	MISPOSITION OF VALVE F013A
		4.84E-02	C12-BV_-RE-F015B	MISPOSITION OF VALVE F015B
		2.63E-04	E50-BV_-OC-F004A	MAINTENANCE VALVE F004A PLUGS/TRANSFERS CLOSED
		1.61E-02	XXX-XHE-FO-LPMAKEUP	OP. FAILS TO RECOG. NEED FOR LOW PRESS. MAKEUP AFTER DEPRESSURIZATION

Table 12.9-5

Cutset Report (Top 200) for Shutdown Core Damage Frequencies Due to Internal Fires

#	Cutset Prob	Event Prob	Event	Description
189	4.89E-12	4.93E-04	%F4197_M5O	
		4.84E-02	C12-BV_-RE-F013A	MISPOSITION OF VALVE F013A
		4.84E-02	C12-BV_-RE-F015B	MISPOSITION OF VALVE F015B
		2.63E-04	E50-BV_-OC-F004D	MAINTENANCE VALVE F004D PLUGS/TRANSFERS CLOSED
		1.61E-02	XXX-XHE-FO-LPMAKEUP	OP. FAILS TO RECOG. NEED FOR LOW PRESS. MAKEUP AFTER DEPRESSURIZATION
190	4.89E-12	4.93E-04	%F4197_M5O	
		4.84E-02	C12-BV_-RE-F013B	MISPOSITION OF VALVE F013B
		4.84E-02	C12-BV_-RE-F015A	MISPOSITION OF VALVE F015A
		2.63E-04	E50-BV_-OC-F004A	MAINTENANCE VALVE F004A PLUGS/TRANSFERS CLOSED
		1.61E-02	XXX-XHE-FO-LPMAKEUP	OP. FAILS TO RECOG. NEED FOR LOW PRESS. MAKEUP AFTER DEPRESSURIZATION
191	4.89E-12	4.93E-04	%F4197_M5O	
		4.84E-02	C12-BV_-RE-F013B	MISPOSITION OF VALVE F013B
		4.84E-02	C12-BV_-RE-F015A	MISPOSITION OF VALVE F015A
		2.63E-04	E50-BV_-OC-F004D	MAINTENANCE VALVE F004D PLUGS/TRANSFERS CLOSED
		1.61E-02	XXX-XHE-FO-LPMAKEUP	OP. FAILS TO RECOG. NEED FOR LOW PRESS. MAKEUP AFTER DEPRESSURIZATION
192	4.89E-12	4.93E-04	%F4197_M5O	
		4.84E-02	C12-BV_-RE-F015A	MISPOSITION OF VALVE F015A
		4.84E-02	C12-BV_-RE-F015B	MISPOSITION OF VALVE F015B
		2.63E-04	E50-BV_-OC-F004A	MAINTENANCE VALVE F004A PLUGS/TRANSFERS CLOSED
		1.61E-02	XXX-XHE-FO-LPMAKEUP	OP. FAILS TO RECOG. NEED FOR LOW PRESS. MAKEUP AFTER DEPRESSURIZATION
193	4.89E-12	4.93E-04	%F4197_M5O	
		4.84E-02	C12-BV_-RE-F015A	MISPOSITION OF VALVE F015A
		4.84E-02	C12-BV_-RE-F015B	MISPOSITION OF VALVE F015B
		2.63E-04	E50-BV_-OC-F004D	MAINTENANCE VALVE F004D PLUGS/TRANSFERS CLOSED
		1.61E-02	XXX-XHE-FO-LPMAKEUP	OP. FAILS TO RECOG. NEED FOR LOW PRESS. MAKEUP AFTER DEPRESSURIZATION

Table 12.9-5

Cutset Report (Top 200) for Shutdown Core Damage Frequencies Due to Internal Fires

#	Cutset Prob	Event Prob	Event	Description
194	4.82E-12	1.14E-06	%F4250_F4260_M6U	
		2.63E-04	E50-BV_-OC-F004A	MAINTENANCE VALVE F004A PLUGS/TRANSFERS CLOSED
		1.61E-02	XXX-XHE-FO-LPMAKEUP	OP. FAILS TO RECOG. NEED FOR LOW PRESS. MAKEUP AFTER DEPRESSURIZATION
195	4.82E-12	1.14E-06	%F4250_F4260_M6U	
		2.63E-04	E50-BV_-OC-F004D	MAINTENANCE VALVE F004D PLUGS/TRANSFERS CLOSED
		1.61E-02	XXX-XHE-FO-LPMAKEUP	OP. FAILS TO RECOG. NEED FOR LOW PRESS. MAKEUP AFTER DEPRESSURIZATION
196	4.76E-12	4.93E-04	%F4197_M5O	
		1.50E-04	B21-SQV-CC_ALL	CCF of all components in group 'B21-SQV-CC'
		4.00E-03	C12-MOV-CC-F023	MOTOR OPERATED VALVE F023 FAILS TO OPEN
		1.61E-02	XXX-XHE-FO-LPMAKEUP	OP. FAILS TO RECOG. NEED FOR LOW PRESS. MAKEUP AFTER DEPRESSURIZATION
197	4.76E-12	4.93E-04	%F4197_M5O	
		1.50E-04	B21-SQV-CC_ALL	CCF of all components in group 'B21-SQV-CC'
		4.00E-03	C12-MOV-OO-F024	MOTOR OPERATED VALVE F024 FAILS TO CLOSE
		1.61E-02	XXX-XHE-FO-LPMAKEUP	OP. FAILS TO RECOG. NEED FOR LOW PRESS. MAKEUP AFTER DEPRESSURIZATION
198	4.76E-12	4.93E-04	%F4197_M5O	
		1.50E-04	B21-SQV-CC_ALL	CCF of all components in group 'B21-SQV-CC'
		4.00E-03	C12-MOV-OO-F062A	MOTOR OPERATED VALVE F062A FAILS TO CLOSE
		1.61E-02	XXX-XHE-FO-LPMAKEUP	OP. FAILS TO RECOG. NEED FOR LOW PRESS. MAKEUP AFTER DEPRESSURIZATION
199	4.76E-12	4.93E-04	%F4197_M5O	
		1.50E-04	B21-SQV-CC_ALL	CCF of all components in group 'B21-SQV-CC'
		4.00E-03	C12-MOV-OO-F062B	MOTOR OPERATED VALVE F062B FAILS TO CLOSE
		1.61E-02	XXX-XHE-FO-LPMAKEUP	OP. FAILS TO RECOG. NEED FOR LOW PRESS. MAKEUP AFTER DEPRESSURIZATION

Table 12.9-5

Cutset Report (Top 200) for Shutdown Core Damage Frequencies Due to Internal Fires

#	Cutset Prob	Event Prob	Event	Description
200	4.76E-12	4.93E-04	%F4197_M5O	
		2.00E-03	C12-ACV-OO-F012	AIR OPERATED VALVE F012 FAILS TO CLOSE
		3.00E-04	E50-SQV-CC-EQU_ALL	CCF of all components in group 'E50-SQV-CC-EQU'
		1.61E-02	XXX-XHE-FO-LPMAKEUP	OP. FAILS TO RECOG. NEED FOR LOW PRESS. MAKEUP AFTER DEPRESSURIZATION

Table 12.9-6

Importance Measure Report for Full-Power Core Damage Frequencies Due to Internal Fires

Event Name	Probability	Fus Ves	Ach W	Description
B21-SQV-CC_1_2	2.38E-05	2.51E-04	11.52	CCF of two components: B21-SQV-CC-F004A & B21-SQV-CC-F004B
B21-SQV-CC_1_2_3	7.94E-07	6.72E-06	9.45	CCF of three components: B21-SQV-CC-F004A & B21-SQV-CC-F004B & B21-SQV-CC-F004C
B21-SQV-CC_1_2_4	7.94E-07	6.72E-06	9.45	CCF of three components: B21-SQV-CC-F004A & B21-SQV-CC-F004B & B21-SQV-CC-F004D
B21-SQV-CC_1_2_5	7.94E-07	6.72E-06	9.45	CCF of three components: B21-SQV-CC-F004A & B21-SQV-CC-F004B & B21-SQV-CC-F004E
B21-SQV-CC_1_2_6	7.94E-07	6.72E-06	9.45	CCF of three components: B21-SQV-CC-F004A & B21-SQV-CC-F004B & B21-SQV-CC-F004F
B21-SQV-CC_1_2_7	7.94E-07	6.72E-06	9.45	CCF of three components: B21-SQV-CC-F004A & B21-SQV-CC-F004B & B21-SQV-CC-F004G
B21-SQV-CC_1_2_8	7.94E-07	6.72E-06	9.45	CCF of three components: B21-SQV-CC-F004A & B21-SQV-CC-F004B & B21-SQV-CC-F004H
B21-SQV-CC_1_3	2.38E-05	1.34E-04	6.6	CCF of two components: B21-SQV-CC-F004A & B21-SQV-CC-F004C
B21-SQV-CC_1_3_4	7.94E-07	6.72E-06	9.45	CCF of three components: B21-SQV-CC-F004A & B21-SQV-CC-F004C & B21-SQV-CC-F004D

Table 12.9-6

Importance Measure Report for Full-Power Core Damage Frequencies Due to Internal Fires

Event Name	Probability	Fus Ves	Ach W	Description
B21-SQV-CC_1_3_5	7.94E-07	3.56E-06	5.46	CCF of three components: B21-SQV-CC-F004A & B21-SQV-CC-F004C & B21-SQV-CC-F004E
B21-SQV-CC_1_3_6	7.94E-07	6.72E-06	9.45	CCF of three components: B21-SQV-CC-F004A & B21-SQV-CC-F004C & B21-SQV-CC-F004F
B21-SQV-CC_1_3_7	7.94E-07	3.56E-06	5.46	CCF of three components: B21-SQV-CC-F004A & B21-SQV-CC-F004C & B21-SQV-CC-F004G
B21-SQV-CC_1_3_8	7.94E-07	6.72E-06	9.45	CCF of three components: B21-SQV-CC-F004A & B21-SQV-CC-F004C & B21-SQV-CC-F004H
B21-SQV-CC_1_4	2.38E-05	2.51E-04	11.52	CCF of two components: B21-SQV-CC-F004A & B21-SQV-CC-F004D
B21-SQV-CC_1_4_5	7.94E-07	6.72E-06	9.45	CCF of three components: B21-SQV-CC-F004A & B21-SQV-CC-F004D & B21-SQV-CC-F004E
B21-SQV-CC_1_4_6	7.94E-07	6.72E-06	9.45	CCF of three components: B21-SQV-CC-F004A & B21-SQV-CC-F004D & B21-SQV-CC-F004F
B21-SQV-CC_1_4_7	7.94E-07	6.72E-06	9.45	CCF of three components: B21-SQV-CC-F004A & B21-SQV-CC-F004D & B21-SQV-CC-F004G
B21-SQV-CC_1_4_8	7.94E-07	6.72E-06	9.45	CCF of three components: B21-SQV-CC-F004A & B21-SQV-CC-F004D & B21-SQV-CC-F004H
B21-SQV-CC_1_5	2.38E-05	1.34E-04	6.6	CCF of two components: B21-SQV-CC-F004A & B21-SQV-CC-F004E

Table 12.9-6

Importance Measure Report for Full-Power Core Damage Frequencies Due to Internal Fires

Event Name	Probability	Fus Ves	Ach W	Description
B21-SQV-CC_1_5_6	7.94E-07	6.72E-06	9.45	CCF of three components: B21-SQV-CC-F004A & B21-SQV-CC-F004E & B21-SQV-CC-F004F
B21-SQV-CC_1_5_7	7.94E-07	3.56E-06	5.46	CCF of three components: B21-SQV-CC-F004A & B21-SQV-CC-F004E & B21-SQV-CC-F004G
B21-SQV-CC_1_5_8	7.94E-07	6.72E-06	9.45	CCF of three components: B21-SQV-CC-F004A & B21-SQV-CC-F004E & B21-SQV-CC-F004H
B21-SQV-CC_1_6	2.38E-05	2.51E-04	11.52	CCF of two components: B21-SQV-CC-F004A & B21-SQV-CC-F004F
B21-SQV-CC_1_6_7	7.94E-07	6.72E-06	9.45	CCF of three components: B21-SQV-CC-F004A & B21-SQV-CC-F004F & B21-SQV-CC-F004G
B21-SQV-CC_1_6_8	7.94E-07	6.72E-06	9.45	CCF of three components: B21-SQV-CC-F004A & B21-SQV-CC-F004F & B21-SQV-CC-F004H
B21-SQV-CC_1_7	2.38E-05	1.34E-04	6.6	CCF of two components: B21-SQV-CC-F004A & B21-SQV-CC-F004G
B21-SQV-CC_1_7_8	7.94E-07	6.72E-06	9.45	CCF of three components: B21-SQV-CC-F004A & B21-SQV-CC-F004G & B21-SQV-CC-F004H
B21-SQV-CC_1_8	2.38E-05	2.51E-04	11.52	CCF of two components: B21-SQV-CC-F004A & B21-SQV-CC-F004H
B21-SQV-CC_2_3	2.38E-05	2.51E-04	11.52	CCF of two components: B21-SQV-CC-F004B & B21-SQV-CC-F004C
B21-SQV-CC_2_3_4	7.94E-07	6.72E-06	9.45	CCF of three components: B21-SQV-CC-F004B & B21-SQV-CC-F004C & B21-SQV-CC-F004D

Table 12.9-6

Importance Measure Report for Full-Power Core Damage Frequencies Due to Internal Fires

Event Name	Probability	Fus Ves	Ach W	Description
B21-SQV-CC_2_3_5	7.94E-07	6.72E-06	9.45	CCF of three components: B21-SQV-CC-F004B & B21-SQV-CC-F004C & B21-SQV-CC-F004E
B21-SQV-CC_2_3_6	7.94E-07	6.72E-06	9.45	CCF of three components: B21-SQV-CC-F004B & B21-SQV-CC-F004C & B21-SQV-CC-F004F
B21-SQV-CC_2_3_7	7.94E-07	6.72E-06	9.45	CCF of three components: B21-SQV-CC-F004B & B21-SQV-CC-F004C & B21-SQV-CC-F004G
B21-SQV-CC_2_3_8	7.94E-07	6.72E-06	9.45	CCF of three components: B21-SQV-CC-F004B & B21-SQV-CC-F004C & B21-SQV-CC-F004H
B21-SQV-CC_2_4	2.38E-05	1.17E-04	5.92	CCF of two components: B21-SQV-CC-F004B & B21-SQV-CC-F004D
B21-SQV-CC_2_4_5	7.94E-07	6.72E-06	9.45	CCF of three components: B21-SQV-CC-F004B & B21-SQV-CC-F004D & B21-SQV-CC-F004E
B21-SQV-CC_2_4_6	7.94E-07	3.17E-06	4.99	CCF of three components: B21-SQV-CC-F004B & B21-SQV-CC-F004D & B21-SQV-CC-F004F
B21-SQV-CC_2_4_7	7.94E-07	6.72E-06	9.45	CCF of three components: B21-SQV-CC-F004B & B21-SQV-CC-F004D & B21-SQV-CC-F004G
B21-SQV-CC_2_4_8	7.94E-07	3.17E-06	4.99	CCF of three components: B21-SQV-CC-F004B & B21-SQV-CC-F004D & B21-SQV-CC-F004H
B21-SQV-CC_2_5	2.38E-05	2.51E-04	11.52	CCF of two components: B21-SQV-CC-F004B & B21-SQV-CC-F004E

Table 12.9-6

Importance Measure Report for Full-Power Core Damage Frequencies Due to Internal Fires

Event Name	Probability	Fus Ves	Ach W	Description
B21-SQV-CC_2_5_6	7.94E-07	6.72E-06	9.45	CCF of three components: B21-SQV-CC-F004B & B21-SQV-CC-F004E & B21-SQV-CC-F004F
B21-SQV-CC_2_5_7	7.94E-07	6.72E-06	9.45	CCF of three components: B21-SQV-CC-F004B & B21-SQV-CC-F004E & B21-SQV-CC-F004G
B21-SQV-CC_2_5_8	7.94E-07	6.72E-06	9.45	CCF of three components: B21-SQV-CC-F004B & B21-SQV-CC-F004E & B21-SQV-CC-F004H
B21-SQV-CC_2_6	2.38E-05	1.17E-04	5.92	CCF of two components: B21-SQV-CC-F004B & B21-SQV-CC-F004F
B21-SQV-CC_2_6_7	7.94E-07	6.72E-06	9.45	CCF of three components: B21-SQV-CC-F004B & B21-SQV-CC-F004F & B21-SQV-CC-F004G
B21-SQV-CC_2_6_8	7.94E-07	3.17E-06	4.99	CCF of three components: B21-SQV-CC-F004B & B21-SQV-CC-F004F & B21-SQV-CC-F004H
B21-SQV-CC_2_7	2.38E-05	2.51E-04	11.52	CCF of two components: B21-SQV-CC-F004B & B21-SQV-CC-F004G
B21-SQV-CC_2_7_8	7.94E-07	6.72E-06	9.45	CCF of three components: B21-SQV-CC-F004B & B21-SQV-CC-F004G & B21-SQV-CC-F004H
B21-SQV-CC_2_8	2.38E-05	1.17E-04	5.92	CCF of two components: B21-SQV-CC-F004B & B21-SQV-CC-F004H
B21-SQV-CC_3_4	2.38E-05	2.51E-04	11.52	CCF of two components: B21-SQV-CC-F004C & B21-SQV-CC-F004D
B21-SQV-CC_3_4_5	7.94E-07	6.72E-06	9.45	CCF of three components: B21-SQV-CC-F004C & B21-SQV-CC-F004D & B21-SQV-CC-F004E

Table 12.9-6

Importance Measure Report for Full-Power Core Damage Frequencies Due to Internal Fires

Event Name	Probability	Fus Ves	Ach W	Description
B21-SQV-CC_3_4_6	7.94E-07	6.72E-06	9.45	CCF of three components: B21-SQV-CC-F004C & B21-SQV-CC-F004D & B21-SQV-CC-F004F
B21-SQV-CC_3_4_7	7.94E-07	6.72E-06	9.45	CCF of three components: B21-SQV-CC-F004C & B21-SQV-CC-F004D & B21-SQV-CC-F004G
B21-SQV-CC_3_4_8	7.94E-07	6.72E-06	9.45	CCF of three components: B21-SQV-CC-F004C & B21-SQV-CC-F004D & B21-SQV-CC-F004H
B21-SQV-CC_3_5	2.38E-05	1.34E-04	6.6	CCF of two components: B21-SQV-CC-F004C & B21-SQV-CC-F004E
B21-SQV-CC_3_5_6	7.94E-07	6.72E-06	9.45	CCF of three components: B21-SQV-CC-F004C & B21-SQV-CC-F004E & B21-SQV-CC-F004F
B21-SQV-CC_3_5_7	7.94E-07	3.56E-06	5.46	CCF of three components: B21-SQV-CC-F004C & B21-SQV-CC-F004E & B21-SQV-CC-F004G
B21-SQV-CC_3_5_8	7.94E-07	6.72E-06	9.45	CCF of three components: B21-SQV-CC-F004C & B21-SQV-CC-F004E & B21-SQV-CC-F004H
B21-SQV-CC_3_6	2.38E-05	2.51E-04	11.52	CCF of two components: B21-SQV-CC-F004C & B21-SQV-CC-F004F
B21-SQV-CC_3_6_7	7.94E-07	6.72E-06	9.45	CCF of three components: B21-SQV-CC-F004C & B21-SQV-CC-F004F & B21-SQV-CC-F004G
B21-SQV-CC_3_6_8	7.94E-07	6.72E-06	9.45	CCF of three components: B21-SQV-CC-F004C & B21-SQV-CC-F004F & B21-SQV-CC-F004H

Table 12.9-6

Importance Measure Report for Full-Power Core Damage Frequencies Due to Internal Fires

Event Name	Probability	Fus Ves	Ach W	Description
B21-SQV-CC_3_7	2.38E-05	1.34E-04	6.6	CCF of two components: B21-SQV-CC-F004C & B21-SQV-CC-F004G
B21-SQV-CC_3_7_8	7.94E-07	6.72E-06	9.45	CCF of three components: B21-SQV-CC-F004C & B21-SQV-CC-F004G & B21-SQV-CC-F004H
B21-SQV-CC_3_8	2.38E-05	2.51E-04	11.52	CCF of two components: B21-SQV-CC-F004C & B21-SQV-CC-F004H
B21-SQV-CC_4_5	2.38E-05	2.51E-04	11.52	CCF of two components: B21-SQV-CC-F004D & B21-SQV-CC-F004E
B21-SQV-CC_4_5_6	7.94E-07	6.72E-06	9.45	CCF of three components: B21-SQV-CC-F004D & B21-SQV-CC-F004E & B21-SQV-CC-F004F
B21-SQV-CC_4_5_7	7.94E-07	6.72E-06	9.45	CCF of three components: B21-SQV-CC-F004D & B21-SQV-CC-F004E & B21-SQV-CC-F004G
B21-SQV-CC_4_5_8	7.94E-07	6.72E-06	9.45	CCF of three components: B21-SQV-CC-F004D & B21-SQV-CC-F004E & B21-SQV-CC-F004H
B21-SQV-CC_4_6	2.38E-05	1.17E-04	5.92	CCF of two components: B21-SQV-CC-F004D & B21-SQV-CC-F004F
B21-SQV-CC_4_6_7	7.94E-07	6.72E-06	9.45	CCF of three components: B21-SQV-CC-F004D & B21-SQV-CC-F004F & B21-SQV-CC-F004G
B21-SQV-CC_4_6_8	7.94E-07	3.17E-06	4.99	CCF of three components: B21-SQV-CC-F004D & B21-SQV-CC-F004F & B21-SQV-CC-F004H
B21-SQV-CC_4_7	2.38E-05	2.51E-04	11.52	CCF of two components: B21-SQV-CC-F004D & B21-SQV-CC-F004G

Table 12.9-6

Importance Measure Report for Full-Power Core Damage Frequencies Due to Internal Fires

Event Name	Probability	Fus Ves	Ach W	Description
B21-SQV-CC_4_7_8	7.94E-07	6.72E-06	9.45	CCF of three components: B21-SQV-CC-F004D & B21-SQV-CC-F004G & B21-SQV-CC-F004H
B21-SQV-CC_4_8	2.38E-05	1.17E-04	5.92	CCF of two components: B21-SQV-CC-F004D & B21-SQV-CC-F004H
B21-SQV-CC_5_6	2.38E-05	2.51E-04	11.52	CCF of two components: B21-SQV-CC-F004E & B21-SQV-CC-F004F
B21-SQV-CC_5_6_7	7.94E-07	6.72E-06	9.45	CCF of three components: B21-SQV-CC-F004E & B21-SQV-CC-F004F & B21-SQV-CC-F004G
B21-SQV-CC_5_6_8	7.94E-07	6.72E-06	9.45	CCF of three components: B21-SQV-CC-F004E & B21-SQV-CC-F004F & B21-SQV-CC-F004H
B21-SQV-CC_5_7	2.38E-05	1.34E-04	6.6	CCF of two components: B21-SQV-CC-F004E & B21-SQV-CC-F004G
B21-SQV-CC_5_7_8	7.94E-07	6.72E-06	9.45	CCF of three components: B21-SQV-CC-F004E & B21-SQV-CC-F004G & B21-SQV-CC-F004H
B21-SQV-CC_5_8	2.38E-05	2.51E-04	11.52	CCF of two components: B21-SQV-CC-F004E & B21-SQV-CC-F004H
B21-SQV-CC_6_7	2.38E-05	2.51E-04	11.52	CCF of two components: B21-SQV-CC-F004F & B21-SQV-CC-F004G
B21-SQV-CC_6_7_8	7.94E-07	6.72E-06	9.45	CCF of three components: B21-SQV-CC-F004F & B21-SQV-CC-F004G & B21-SQV-CC-F004H
B21-SQV-CC_6_8	2.38E-05	1.17E-04	5.92	CCF of two components: B21-SQV-CC-F004F & B21-SQV-CC-F004H
B21-SQV-CC_7_8	2.38E-05	2.51E-04	11.52	CCF of two components: B21-SQV-CC-F004G & B21-SQV-CC-F004H

Table 12.9-6

Importance Measure Report for Full-Power Core Damage Frequencies Due to Internal Fires

Event Name	Probability	Fus Ves	Ach W	Description
B21-SQV-CC_ALL	1.50E-04	4.15E-02	277.17	CCF of all components in group 'B21-SQV-CC'
B21-SQV-CC-F004A	3.00E-03	1.79E-02	6.94	EXPLOSIVE VALVE DPV F004A FAILS TO OPERATE
B21-SQV-CC-F004B	3.00E-03	1.56E-02	6.19	EXPLOSIVE VALVE DPV B FAILS TO OPERATE
B21-SQV-CC-F004C	3.00E-03	1.79E-02	6.94	EXPLOSIVE VALVE DPV C FAILS TO OPERATE
B21-SQV-CC-F004D	3.00E-03	1.56E-02	6.19	EXPLOSIVE VALVE DPV D FAILS TO OPERATE
B21-SQV-CC-F004E	3.00E-03	1.79E-02	6.94	EXPLOSIVE VALVE DPV E FAILS TO OPERATE
B21-SQV-CC-F004F	3.00E-03	1.56E-02	6.19	EXPLOSIVE VALVE DPV F FAILS TO OPERATE
B21-SQV-CC-F004G	3.00E-03	1.79E-02	6.94	EXPLOSIVE VALVE DPV G FAILS TO OPERATE
B21-SQV-CC-F004H	3.00E-03	1.56E-02	6.19	EXPLOSIVE VALVE DPV H FAILS TO OPERATE
B21-SRV-OO-ANYSRV1	6.00E-03	5.19E-03	1.86	SAFETY/RELIEF VALVE FAILS TO RE-CLOSE
B21-SRV-OO-ANYSRV10	6.00E-03	5.19E-03	1.86	SAFETY/RELIEF VALVE FAILS TO RE-CLOSE
B21-SRV-OO-ANYSRV11	6.00E-03	5.19E-03	1.86	SAFETY/RELIEF VALVE FAILS TO RE-CLOSE
B21-SRV-OO-ANYSRV12	6.00E-03	5.19E-03	1.86	SAFETY/RELIEF VALVE FAILS TO RE-CLOSE
B21-SRV-OO-ANYSRV13	6.00E-03	5.19E-03	1.86	SAFETY/RELIEF VALVE FAILS TO RE-CLOSE

Table 12.9-6

Importance Measure Report for Full-Power Core Damage Frequencies Due to Internal Fires

Event Name	Probability	Fus Ves	Ach W	Description
B21-SRV-OO-ANYSRV14	6.00E-03	5.19E-03	1.86	SAFETY/RELIEF VALVE FAILS TO RE-CLOSE
B21-SRV-OO-ANYSRV15	6.00E-03	5.19E-03	1.86	SAFETY/RELIEF VALVE FAILS TO RE-CLOSE
B21-SRV-OO-ANYSRV16	6.00E-03	5.19E-03	1.86	SAFETY/RELIEF VALVE FAILS TO RE-CLOSE
B21-SRV-OO-ANYSRV17	6.00E-03	5.19E-03	1.86	SAFETY/RELIEF VALVE FAILS TO RE-CLOSE
B21-SRV-OO-ANYSRV18	6.00E-03	5.19E-03	1.86	SAFETY/RELIEF VALVE FAILS TO RE-CLOSE
B21-SRV-OO-ANYSRV2	6.00E-03	5.19E-03	1.86	SAFETY/RELIEF VALVE FAILS TO RE-CLOSE
B21-SRV-OO-ANYSRV3	6.00E-03	5.19E-03	1.86	SAFETY/RELIEF VALVE FAILS TO RE-CLOSE
B21-SRV-OO-ANYSRV4	6.00E-03	5.19E-03	1.86	SAFETY/RELIEF VALVE FAILS TO RE-CLOSE
B21-SRV-OO-ANYSRV5	6.00E-03	5.19E-03	1.86	SAFETY/RELIEF VALVE FAILS TO RE-CLOSE
B21-SRV-OO-ANYSRV6	6.00E-03	5.19E-03	1.86	SAFETY/RELIEF VALVE FAILS TO RE-CLOSE
B21-SRV-OO-ANYSRV7	6.00E-03	5.19E-03	1.86	SAFETY/RELIEF VALVE FAILS TO RE-CLOSE
B21-SRV-OO-ANYSRV8	6.00E-03	5.19E-03	1.86	SAFETY/RELIEF VALVE FAILS TO RE-CLOSE
B21-SRV-OO-ANYSRV9	6.00E-03	5.19E-03	1.86	SAFETY/RELIEF VALVE FAILS TO RE-CLOSE
B21-SRV-RO-F006_ALL	4.74E-07	9.07E-07	2.82	CCF of all components in group 'B21-SRV-RO-F006'

Table 12.9-6

Importance Measure Report for Full-Power Core Damage Frequencies Due to Internal Fires

Event Name	Probability	Fus Ves	Ach W	Description
B21-UV_-CC-F102_1_2	2.99E-06	2.75E-05	10.04	CCF of two components: B21-UV_-CC-F102A & B21-UV_-CC-F102B
B21-UV_-CC-F102B	1.00E-04	1.07E-04	2.07	CHECK VALVE F102B FAILS TO OPEN
B21-UV_-CC-F111_1_2	2.99E-06	2.75E-05	10.04	CCF of two components: B21-UV_-CC-F111A & B21-UV_-CC-F111B
B21-UV_-CC-F111B	1.00E-04	1.07E-04	2.07	CHECK VALVE F111B FAILS TO OPEN
B32-ACC-FO-A105A	2.40E-06	4.02E-06	2.62	Nitrogen or Air Accumulator Fails
B32-ACC-FO-A105B	2.40E-06	4.02E-06	2.62	Nitrogen or Air Accumulator Fails
B32-HOV-OC-F001A	2.40E-06	1.89E-05	8.71	ELECTRO-HYDRAULIC VALVE FAILS TO REMAIN OPEN
B32-HOV-OC-F001B	2.40E-06	1.89E-05	8.71	ELECTRO-HYDRAULIC VALVE FAILS TO REMAIN OPEN
B32-HOV-OC-F001C	2.40E-06	1.89E-05	8.71	ELECTRO-HYDRAULIC VALVE FAILS TO REMAIN OPEN
B32-HOV-OC-F001D	2.40E-06	1.89E-05	8.71	ELECTRO-HYDRAULIC VALVE FAILS TO REMAIN OPEN
B32-HOV-OC-F004A	2.40E-06	1.89E-05	8.71	ELECTRO-HYDRAULIC VALVE FAILS TO REMAIN OPEN
B32-HOV-OC-F004B	2.40E-06	1.89E-05	8.71	ELECTRO-HYDRAULIC VALVE FAILS TO REMAIN OPEN
B32-HOV-OC-F004C	2.40E-06	1.89E-05	8.71	ELECTRO-HYDRAULIC VALVE FAILS TO REMAIN OPEN
B32-HOV-OC-F004D	2.40E-06	1.89E-05	8.71	ELECTRO-HYDRAULIC VALVE FAILS TO REMAIN OPEN
B32-HX_-PG_1_2	9.02E-08	6.06E-06	67.83	CCF of two components: B32-HX_-PG-HX001A & B32-HX_-PG-HX001B
B32-HX_-PG_1_3	9.02E-08	6.06E-06	67.83	CCF of two components: B32-HX_-PG-HX001A & B32-HX_-PG-HX001C

Table 12.9-6

Importance Measure Report for Full-Power Core Damage Frequencies Due to Internal Fires

Event Name	Probability	Fus Ves	Ach W	Description
B32-HX_-PG_1_4	9.02E-08	6.06E-06	67.83	CCF of two components: B32-HX_-PG-HX001A & B32-HX_-PG-HX001D
B32-HX_-PG_1_6	9.02E-08	6.06E-06	67.83	CCF of two components: B32-HX_-PG-HX001A & B32-HX_-PG-HX002B
B32-HX_-PG_1_7	9.02E-08	6.06E-06	67.83	CCF of two components: B32-HX_-PG-HX001A & B32-HX_-PG-HX002C
B32-HX_-PG_1_8	9.02E-08	6.06E-06	67.83	CCF of two components: B32-HX_-PG-HX001A & B32-HX_-PG-HX002D
B32-HX_-PG_2_3	9.02E-08	6.06E-06	67.83	CCF of two components: B32-HX_-PG-HX001B & B32-HX_-PG-HX001C
B32-HX_-PG_2_4	9.02E-08	6.06E-06	67.83	CCF of two components: B32-HX_-PG-HX001B & B32-HX_-PG-HX001D
B32-HX_-PG_2_5	9.02E-08	6.06E-06	67.83	CCF of two components: B32-HX_-PG-HX001B & B32-HX_-PG-HX002A
B32-HX_-PG_2_7	9.02E-08	6.06E-06	67.83	CCF of two components: B32-HX_-PG-HX001B & B32-HX_-PG-HX002C
B32-HX_-PG_2_8	9.02E-08	6.06E-06	67.83	CCF of two components: B32-HX_-PG-HX001B & B32-HX_-PG-HX002D
B32-HX_-PG_3_4	9.02E-08	6.06E-06	67.83	CCF of two components: B32-HX_-PG-HX001C & B32-HX_-PG-HX001D
B32-HX_-PG_3_5	9.02E-08	6.06E-06	67.83	CCF of two components: B32-HX_-PG-HX001C & B32-HX_-PG-HX002A
B32-HX_-PG_3_6	9.02E-08	6.06E-06	67.83	CCF of two components: B32-HX_-PG-HX001C & B32-HX_-PG-HX002B
B32-HX_-PG_3_8	9.02E-08	6.06E-06	67.83	CCF of two components: B32-HX_-PG-HX001C & B32-HX_-PG-HX002D
B32-HX_-PG_4_5	9.02E-08	6.06E-06	67.83	CCF of two components: B32-HX_-PG-HX001D & B32-HX_-PG-HX002A

Table 12.9-6

Importance Measure Report for Full-Power Core Damage Frequencies Due to Internal Fires

Event Name	Probability	Fus Ves	Ach W	Description
B32-HX_-PG_4_6	9.02E-08	6.06E-06	67.83	CCF of two components: B32-HX_-PG-HX001D & B32-HX_-PG-HX002B
B32-HX_-PG_4_7	9.02E-08	6.06E-06	67.83	CCF of two components: B32-HX_-PG-HX001D & B32-HX_-PG-HX002C
B32-HX_-PG_5_6	9.02E-08	6.06E-06	67.83	CCF of two components: B32-HX_-PG-HX002A & B32-HX_-PG-HX002B
B32-HX_-PG_5_7	9.02E-08	6.06E-06	67.83	CCF of two components: B32-HX_-PG-HX002A & B32-HX_-PG-HX002C
B32-HX_-PG_5_8	9.02E-08	6.06E-06	67.83	CCF of two components: B32-HX_-PG-HX002A & B32-HX_-PG-HX002D
B32-HX_-PG_6_7	9.02E-08	6.06E-06	67.83	CCF of two components: B32-HX_-PG-HX002B & B32-HX_-PG-HX002C
B32-HX_-PG_6_8	9.02E-08	6.06E-06	67.83	CCF of two components: B32-HX_-PG-HX002B & B32-HX_-PG-HX002D
B32-HX_-PG_7_8	9.02E-08	6.06E-06	67.83	CCF of two components: B32-HX_-PG-HX002C & B32-HX_-PG-HX002D
B32-HX_-PG_ALL	5.68E-07	5.12E-05	90.24	CCF of all components in group 'B32-HX_-PG'
B32-HX_-PG-HX001A	2.40E-05	2.73E-04	12.29	Heat Exchanger HX001A Plugs
B32-HX_-PG-HX001B	2.40E-05	2.73E-04	12.29	Heat Exchanger HX001B Plugs
B32-HX_-PG-HX001C	2.40E-05	2.73E-04	12.29	Heat Exchanger HX001C Plugs
B32-HX_-PG-HX001D	2.40E-05	2.73E-04	12.29	Heat Exchanger HX001D Plugs
B32-HX_-PG-HX002A	2.40E-05	2.73E-04	12.29	Heat Exchanger HX002A Plugs
B32-HX_-PG-HX002B	2.40E-05	2.73E-04	12.29	Heat Exchanger HX002B Plugs
B32-HX_-PG-HX002C	2.40E-05	2.73E-04	12.29	Heat Exchanger HX002A Plugs
B32-HX_-PG-HX002D	2.40E-05	2.73E-04	12.29	Heat Exchanger HX002D Plugs
B32-NONCONDENSE	1.00E+00	5.53E-02	1	Non condensable gasses form in ICS sufficiently to require venting
B32-NPO-CC-F105A	1.00E-04	2.78E-03	28.73	F105A Fails to Open

Table 12.9-6

Importance Measure Report for Full-Power Core Damage Frequencies Due to Internal Fires

Event Name	Probability	Fus Ves	Ach W	Description
B32-NPO-CC-F105B	1.00E-04	2.78E-03	28.73	F105B fails to open
B32-NPO-CC-XCONN_1_2	9.65E-06	4.73E-04	49.89	CCF of two components: B32-NPO-CC-F105A & B32-NPO-CC-F105B
B32-NPO-OC-F002A	2.40E-06	1.89E-05	8.71	F002A Spuriously closes
B32-NPO-OC-F002B	2.40E-06	1.89E-05	8.71	F002B Spuriously closes
B32-NPO-OC-F002C	2.40E-06	1.89E-05	8.71	F002C Spuriously closes
B32-NPO-OC-F002D	2.40E-06	1.89E-05	8.71	F002D Spuriously closes
B32-NPO-OC-F003A	2.40E-06	1.89E-05	8.71	F003A Spuriously closes
B32-NPO-OC-F003B	2.40E-06	1.89E-05	8.71	F003B Spuriously closes
B32-NPO-OC-F003C	2.40E-06	1.89E-05	8.71	F003C Spuriously closes
B32-NPO-OC-F003D	2.40E-06	1.89E-05	8.71	F003D Spuriously closes
B32-SOV-FE-09/10_1_2	7.94E-06	1.45E-04	19.09	CCF of two components: B32-SOV-FE-F009A & B32-SOV-FE-F009B
B32-SOV-FE-09/10_1_2_3	2.65E-07	2.81E-06	11.42	CCF of three components: B32-SOV-FE-F009A & B32-SOV-FE-F009B & B32-SOV-FE-F009C
B32-SOV-FE-09/10_1_2_4	2.65E-07	2.81E-06	11.42	CCF of three components: B32-SOV-FE-F009A & B32-SOV-FE-F009B & B32-SOV-FE-F009D
B32-SOV-FE-09/10_1_2_5	2.65E-07	2.81E-06	11.42	CCF of three components: B32-SOV-FE-F009A & B32-SOV-FE-F009B & B32-SOV-FE-F010A
B32-SOV-FE-09/10_1_2_6	2.65E-07	2.81E-06	11.42	CCF of three components: B32-SOV-FE-F009A & B32-SOV-FE-F009B & B32-SOV-FE-F010B
B32-SOV-FE-09/10_1_2_7	2.65E-07	2.81E-06	11.42	CCF of three components: B32-SOV-FE-F009A & B32-SOV-FE-F009B & B32-SOV-FE-F010C

Table 12.9-6

Importance Measure Report for Full-Power Core Damage Frequencies Due to Internal Fires

Event Name	Probability	Fus Ves	Ach W	Description
B32-SOV-FE-09/10_1_2_8	2.65E-07	2.81E-06	11.42	CCF of three components: B32-SOV-FE-F009A & B32-SOV-FE-F009B & B32-SOV-FE-F010D
B32-SOV-FE-09/10_1_3	7.94E-06	1.45E-04	19.09	CCF of two components: B32-SOV-FE-F009A & B32-SOV-FE-F009C
B32-SOV-FE-09/10_1_3_4	2.65E-07	2.81E-06	11.42	CCF of three components: B32-SOV-FE-F009A & B32-SOV-FE-F009C & B32-SOV-FE-F009D
B32-SOV-FE-09/10_1_3_5	2.65E-07	2.81E-06	11.42	CCF of three components: B32-SOV-FE-F009A & B32-SOV-FE-F009C & B32-SOV-FE-F010A
B32-SOV-FE-09/10_1_3_6	2.65E-07	2.81E-06	11.42	CCF of three components: B32-SOV-FE-F009A & B32-SOV-FE-F009C & B32-SOV-FE-F010B
B32-SOV-FE-09/10_1_3_7	2.65E-07	2.81E-06	11.42	CCF of three components: B32-SOV-FE-F009A & B32-SOV-FE-F009C & B32-SOV-FE-F010C
B32-SOV-FE-09/10_1_3_8	2.65E-07	2.81E-06	11.42	CCF of three components: B32-SOV-FE-F009A & B32-SOV-FE-F009C & B32-SOV-FE-F010D
B32-SOV-FE-09/10_1_4	7.94E-06	1.45E-04	19.09	CCF of two components: B32-SOV-FE-F009A & B32-SOV-FE-F009D
B32-SOV-FE-09/10_1_4_5	2.65E-07	2.81E-06	11.42	CCF of three components: B32-SOV-FE-F009A & B32-SOV-FE-F009D & B32-SOV-FE-F010A
B32-SOV-FE-09/10_1_4_6	2.65E-07	2.81E-06	11.42	CCF of three components: B32-SOV-FE-F009A & B32-SOV-FE-F009D & B32-SOV-FE-F010B

Table 12.9-6

Importance Measure Report for Full-Power Core Damage Frequencies Due to Internal Fires

Event Name	Probability	Fus Ves	Ach W	Description
B32-SOV-FE-09/10_1_4_7	2.65E-07	2.81E-06	11.42	CCF of three components: B32-SOV-FE-F009A & B32-SOV-FE-F009D & B32-SOV-FE-F010C
B32-SOV-FE-09/10_1_4_8	2.65E-07	2.81E-06	11.42	CCF of three components: B32-SOV-FE-F009A & B32-SOV-FE-F009D & B32-SOV-FE-F010D
B32-SOV-FE-09/10_1_5	7.94E-06	1.07E-05	2.33	CCF of two components: B32-SOV-FE-F009A & B32-SOV-FE-F010A
B32-SOV-FE-09/10_1_5_6	2.65E-07	2.81E-06	11.42	CCF of three components: B32-SOV-FE-F009A & B32-SOV-FE-F010A & B32-SOV-FE-F010B
B32-SOV-FE-09/10_1_5_7	2.65E-07	2.81E-06	11.42	CCF of three components: B32-SOV-FE-F009A & B32-SOV-FE-F010A & B32-SOV-FE-F010C
B32-SOV-FE-09/10_1_5_8	2.65E-07	2.81E-06	11.42	CCF of three components: B32-SOV-FE-F009A & B32-SOV-FE-F010A & B32-SOV-FE-F010D
B32-SOV-FE-09/10_1_6	7.94E-06	1.45E-04	19.09	CCF of two components: B32-SOV-FE-F009A & B32-SOV-FE-F010B
B32-SOV-FE-09/10_1_6_7	2.65E-07	2.81E-06	11.42	CCF of three components: B32-SOV-FE-F009A & B32-SOV-FE-F010B & B32-SOV-FE-F010C
B32-SOV-FE-09/10_1_6_8	2.65E-07	2.81E-06	11.42	CCF of three components: B32-SOV-FE-F009A & B32-SOV-FE-F010B & B32-SOV-FE-F010D
B32-SOV-FE-09/10_1_7	7.94E-06	1.45E-04	19.09	CCF of two components: B32-SOV-FE-F009A & B32-SOV-FE-F010C

Table 12.9-6

Importance Measure Report for Full-Power Core Damage Frequencies Due to Internal Fires

Event Name	Probability	Fus Ves	Ach W	Description
B32-SOV-FE-09/10_1_7_8	2.65E-07	2.81E-06	11.42	CCF of three components: B32-SOV-FE-F009A & B32-SOV-FE-F010C & B32-SOV-FE-F010D
B32-SOV-FE-09/10_1_8	7.94E-06	1.45E-04	19.09	CCF of two components: B32-SOV-FE-F009A & B32-SOV-FE-F010D
B32-SOV-FE-09/10_2_3	7.94E-06	1.45E-04	19.09	CCF of two components: B32-SOV-FE-F009B & B32-SOV-FE-F009C
B32-SOV-FE-09/10_2_3_4	2.65E-07	2.81E-06	11.42	CCF of three components: B32-SOV-FE-F009B & B32-SOV-FE-F009C & B32-SOV-FE-F009D
B32-SOV-FE-09/10_2_3_5	2.65E-07	2.81E-06	11.42	CCF of three components: B32-SOV-FE-F009B & B32-SOV-FE-F009C & B32-SOV-FE-F010A
B32-SOV-FE-09/10_2_3_6	2.65E-07	2.81E-06	11.42	CCF of three components: B32-SOV-FE-F009B & B32-SOV-FE-F009C & B32-SOV-FE-F010B
B32-SOV-FE-09/10_2_3_7	2.65E-07	2.81E-06	11.42	CCF of three components: B32-SOV-FE-F009B & B32-SOV-FE-F009C & B32-SOV-FE-F010C
B32-SOV-FE-09/10_2_3_8	2.65E-07	2.81E-06	11.42	CCF of three components: B32-SOV-FE-F009B & B32-SOV-FE-F009C & B32-SOV-FE-F010D
B32-SOV-FE-09/10_2_4	7.94E-06	1.45E-04	19.09	CCF of two components: B32-SOV-FE-F009B & B32-SOV-FE-F009D
B32-SOV-FE-09/10_2_4_5	2.65E-07	2.81E-06	11.42	CCF of three components: B32-SOV-FE-F009B & B32-SOV-FE-F009D & B32-SOV-FE-F010A

Table 12.9-6

Importance Measure Report for Full-Power Core Damage Frequencies Due to Internal Fires

Event Name	Probability	Fus Ves	Ach W	Description
B32-SOV-FE-09/10_2_4_6	2.65E-07	2.81E-06	11.42	CCF of three components: B32-SOV-FE-F009B & B32-SOV-FE-F009D & B32-SOV-FE-F010B
B32-SOV-FE-09/10_2_4_7	2.65E-07	2.81E-06	11.42	CCF of three components: B32-SOV-FE-F009B & B32-SOV-FE-F009D & B32-SOV-FE-F010C
B32-SOV-FE-09/10_2_4_8	2.65E-07	2.81E-06	11.42	CCF of three components: B32-SOV-FE-F009B & B32-SOV-FE-F009D & B32-SOV-FE-F010D
B32-SOV-FE-09/10_2_5	7.94E-06	1.45E-04	19.09	CCF of two components: B32-SOV-FE-F009B & B32-SOV-FE-F010A
B32-SOV-FE-09/10_2_5_6	2.65E-07	2.81E-06	11.42	CCF of three components: B32-SOV-FE-F009B & B32-SOV-FE-F010A & B32-SOV-FE-F010B
B32-SOV-FE-09/10_2_5_7	2.65E-07	2.81E-06	11.42	CCF of three components: B32-SOV-FE-F009B & B32-SOV-FE-F010A & B32-SOV-FE-F010C
B32-SOV-FE-09/10_2_5_8	2.65E-07	2.81E-06	11.42	CCF of three components: B32-SOV-FE-F009B & B32-SOV-FE-F010A & B32-SOV-FE-F010D
B32-SOV-FE-09/10_2_6	7.94E-06	1.07E-05	2.33	CCF of two components: B32-SOV-FE-F009B & B32-SOV-FE-F010B
B32-SOV-FE-09/10_2_6_7	2.65E-07	2.81E-06	11.42	CCF of three components: B32-SOV-FE-F009B & B32-SOV-FE-F010B & B32-SOV-FE-F010C
B32-SOV-FE-09/10_2_6_8	2.65E-07	2.81E-06	11.42	CCF of three components: B32-SOV-FE-F009B & B32-SOV-FE-F010B & B32-SOV-FE-F010D

Table 12.9-6

Importance Measure Report for Full-Power Core Damage Frequencies Due to Internal Fires

Event Name	Probability	Fus Ves	Ach W	Description
B32-SOV-FE-09/10_2_7	7.94E-06	1.45E-04	19.09	CCF of two components: B32-SOV-FE-F009B & B32-SOV-FE-F010C
B32-SOV-FE-09/10_2_7_8	2.65E-07	2.81E-06	11.42	CCF of three components: B32-SOV-FE-F009B & B32-SOV-FE-F010C & B32-SOV-FE-F010D
B32-SOV-FE-09/10_2_8	7.94E-06	1.45E-04	19.09	CCF of two components: B32-SOV-FE-F009B & B32-SOV-FE-F010D
B32-SOV-FE-09/10_3_4	7.94E-06	1.45E-04	19.09	CCF of two components: B32-SOV-FE-F009C & B32-SOV-FE-F009D
B32-SOV-FE-09/10_3_4_5	2.65E-07	2.81E-06	11.42	CCF of three components: B32-SOV-FE-F009C & B32-SOV-FE-F009D & B32-SOV-FE-F010A
B32-SOV-FE-09/10_3_4_6	2.65E-07	2.81E-06	11.42	CCF of three components: B32-SOV-FE-F009C & B32-SOV-FE-F009D & B32-SOV-FE-F010B
B32-SOV-FE-09/10_3_4_7	2.65E-07	2.81E-06	11.42	CCF of three components: B32-SOV-FE-F009C & B32-SOV-FE-F009D & B32-SOV-FE-F010C
B32-SOV-FE-09/10_3_4_8	2.65E-07	2.81E-06	11.42	CCF of three components: B32-SOV-FE-F009C & B32-SOV-FE-F009D & B32-SOV-FE-F010D
B32-SOV-FE-09/10_3_5	7.94E-06	1.45E-04	19.09	CCF of two components: B32-SOV-FE-F009C & B32-SOV-FE-F010A
B32-SOV-FE-09/10_3_5_6	2.65E-07	2.81E-06	11.42	CCF of three components: B32-SOV-FE-F009C & B32-SOV-FE-F010A & B32-SOV-FE-F010B
B32-SOV-FE-09/10_3_5_7	2.65E-07	2.81E-06	11.42	CCF of three components: B32-SOV-FE-F009C & B32-SOV-FE-F010A & B32-SOV-FE-F010C

Table 12.9-6

Importance Measure Report for Full-Power Core Damage Frequencies Due to Internal Fires

Event Name	Probability	Fus Ves	Ach W	Description
B32-SOV-FE-09/10_3_5_8	2.65E-07	2.81E-06	11.42	CCF of three components: B32-SOV-FE-F009C & B32-SOV-FE-F010A & B32-SOV-FE-F010D
B32-SOV-FE-09/10_3_6	7.94E-06	1.45E-04	19.09	CCF of two components: B32-SOV-FE-F009C & B32-SOV-FE-F010B
B32-SOV-FE-09/10_3_6_7	2.65E-07	2.81E-06	11.42	CCF of three components: B32-SOV-FE-F009C & B32-SOV-FE-F010B & B32-SOV-FE-F010C
B32-SOV-FE-09/10_3_6_8	2.65E-07	2.81E-06	11.42	CCF of three components: B32-SOV-FE-F009C & B32-SOV-FE-F010B & B32-SOV-FE-F010D
B32-SOV-FE-09/10_3_7	7.94E-06	1.07E-05	2.33	CCF of two components: B32-SOV-FE-F009C & B32-SOV-FE-F010C
B32-SOV-FE-09/10_3_7_8	2.65E-07	2.81E-06	11.42	CCF of three components: B32-SOV-FE-F009C & B32-SOV-FE-F010C & B32-SOV-FE-F010D
B32-SOV-FE-09/10_3_8	7.94E-06	1.45E-04	19.09	CCF of two components: B32-SOV-FE-F009C & B32-SOV-FE-F010D
B32-SOV-FE-09/10_4_5	7.94E-06	1.45E-04	19.09	CCF of two components: B32-SOV-FE-F009D & B32-SOV-FE-F010A
B32-SOV-FE-09/10_4_5_6	2.65E-07	2.81E-06	11.42	CCF of three components: B32-SOV-FE-F009D & B32-SOV-FE-F010A & B32-SOV-FE-F010B
B32-SOV-FE-09/10_4_5_7	2.65E-07	2.81E-06	11.42	CCF of three components: B32-SOV-FE-F009D & B32-SOV-FE-F010A & B32-SOV-FE-F010C
B32-SOV-FE-09/10_4_5_8	2.65E-07	2.81E-06	11.42	CCF of three components: B32-SOV-FE-F009D & B32-SOV-FE-F010A & B32-SOV-FE-F010D

Table 12.9-6

Importance Measure Report for Full-Power Core Damage Frequencies Due to Internal Fires

Event Name	Probability	Fus Ves	Ach W	Description
B32-SOV-FE-09/10_4_6	7.94E-06	1.45E-04	19.09	CCF of two components: B32-SOV-FE-F009D & B32-SOV-FE-F010B
B32-SOV-FE-09/10_4_6_7	2.65E-07	2.81E-06	11.42	CCF of three components: B32-SOV-FE-F009D & B32-SOV-FE-F010B & B32-SOV-FE-F010C
B32-SOV-FE-09/10_4_6_8	2.65E-07	2.81E-06	11.42	CCF of three components: B32-SOV-FE-F009D & B32-SOV-FE-F010B & B32-SOV-FE-F010D
B32-SOV-FE-09/10_4_7	7.94E-06	1.45E-04	19.09	CCF of two components: B32-SOV-FE-F009D & B32-SOV-FE-F010C
B32-SOV-FE-09/10_4_7_8	2.65E-07	2.81E-06	11.42	CCF of three components: B32-SOV-FE-F009D & B32-SOV-FE-F010C & B32-SOV-FE-F010D
B32-SOV-FE-09/10_4_8	7.94E-06	1.07E-05	2.33	CCF of two components: B32-SOV-FE-F009D & B32-SOV-FE-F010D
B32-SOV-FE-09/10_5_6	7.94E-06	1.45E-04	19.09	CCF of two components: B32-SOV-FE-F010A & B32-SOV-FE-F010B
B32-SOV-FE-09/10_5_6_7	2.65E-07	2.81E-06	11.42	CCF of three components: B32-SOV-FE-F010A & B32-SOV-FE-F010B & B32-SOV-FE-F010C
B32-SOV-FE-09/10_5_6_8	2.65E-07	2.81E-06	11.42	CCF of three components: B32-SOV-FE-F010A & B32-SOV-FE-F010B & B32-SOV-FE-F010D
B32-SOV-FE-09/10_5_7	7.94E-06	1.45E-04	19.09	CCF of two components: B32-SOV-FE-F010A & B32-SOV-FE-F010C
B32-SOV-FE-09/10_5_7_8	2.65E-07	2.81E-06	11.42	CCF of three components: B32-SOV-FE-F010A & B32-SOV-FE-F010C & B32-SOV-FE-F010D

Table 12.9-6

Importance Measure Report for Full-Power Core Damage Frequencies Due to Internal Fires

Event Name	Probability	Fus Ves	Ach W	Description
B32-SOV-FE-09/10_5_8	7.94E-06	1.45E-04	19.09	CCF of two components: B32-SOV-FE-F010A & B32-SOV-FE-F010D
B32-SOV-FE-09/10_6_7	7.94E-06	1.45E-04	19.09	CCF of two components: B32-SOV-FE-F010B & B32-SOV-FE-F010C
B32-SOV-FE-09/10_6_7_8	2.65E-07	2.81E-06	11.42	CCF of three components: B32-SOV-FE-F010B & B32-SOV-FE-F010C & B32-SOV-FE-F010D
B32-SOV-FE-09/10_6_8	7.94E-06	1.45E-04	19.09	CCF of two components: B32-SOV-FE-F010B & B32-SOV-FE-F010D
B32-SOV-FE-09/10_7_8	7.94E-06	1.45E-04	19.09	CCF of two components: B32-SOV-FE-F010C & B32-SOV-FE-F010D
B32-SOV-FE-09/10_ALL	5.00E-05	1.01E-03	21.2	CCF of all components in group 'B32-SOV-FE-09/10'
B32-SOV-FE-F009A	1.00E-03	2.48E-03	3.46	F009A fails to open on demand
B32-SOV-FE-F009B	1.00E-03	2.48E-03	3.47	SOLENOID VALVE (FAILURE TO ENERGIZE)
B32-SOV-FE-F009C	1.00E-03	2.46E-03	3.45	SOLENOID VALVE (FAILURE TO ENERGIZE)
B32-SOV-FE-F009D	1.00E-03	2.46E-03	3.45	SOLENOID VALVE (FAILURE TO ENERGIZE)
B32-SOV-FE-F010A	1.00E-03	2.48E-03	3.46	F010A fails to open on demand
B32-SOV-FE-F010B	1.00E-03	2.48E-03	3.47	SOLENOID VALVE (FAILURE TO ENERGIZE)
B32-SOV-FE-F010C	1.00E-03	2.46E-03	3.45	SOLENOID VALVE (FAILURE TO ENERGIZE)
B32-SOV-FE-F010D	1.00E-03	2.46E-03	3.45	SOLENOID VALVE (FAILURE TO ENERGIZE)
B32-SQV-CC-F104A	3.00E-03	7.04E-03	3.33	F104A FAILS TO OPEN
B32-SQV-CC-F104B	3.00E-03	7.04E-03	3.33	F104B FAILS TO OPEN

Table 12.9-6

Importance Measure Report for Full-Power Core Damage Frequencies Due to Internal Fires

Event Name	Probability	Fus Ves	Ach W	Description
B32-SQV-CC-XCONN_1_2	3.33E-04	1.38E-03	5.11	CCF of two components: B32-SQV-CC-F104A & B32-SQV-CC-F104B
B32-TM-LOOPA-IND	3.84E-02	5.32E-03	1.13	ICS LOOP A IN TEST OR MAINTENANCE BY ITSELF
B32-TM-LOOPB-IND	3.84E-02	5.32E-03	1.13	ICS LOOP B IN TEST OR MAINTENANCE BY ITSELF
B32-TM-LOOPC-IND	3.84E-02	5.33E-03	1.13	ICS LOOP C IN TEST OR MAINTENANCE BY ITSELF
B32-TM-LOOPD-IND	3.84E-02	5.33E-03	1.13	ICS LOOP D IN TEST OR MAINTENANCE BY ITSELF
B32-UV_-OO-F105A	1.00E-03	4.54E-03	5.52	CHECK VALVE FAILS TO CLOSE
B32-UV_-OO-F105B	1.00E-03	4.54E-03	5.52	CHECK VALVE FAILS TO CLOSE
B32-UV_-OO-XCONN-ACC_1_2	2.67E-05	1.74E-04	7.43	CCF of two components: B32-UV_-OO-F105A & B32-UV_-OO-F105B
B32-UV_-RL-F105A	2.40E-05	7.86E-05	4.24	CHECK VALVE REVERSE LEAKAGE
B32-UV_-RL-F105B	2.40E-05	7.86E-05	4.24	CHECK VALVE REVERSE LEAKAGE
B32-XHE-FO-VENT	1.76E-01	3.39E-02	1.16	Operator fails to open vent
C12-ACV-CC-SCRV126	6.90E-09	1.42E-03	205000	CCF TO OPEN OF AIR OPERATED SCRAM VALVE AOV-126
C12-ACV-OO-F012	2.00E-03	2.63E-03	2.31	AIR OPERATED VALVE F012 FAILS TO CLOSE
C12-ACV-OO-F012-F030_1_2	1.93E-04	2.26E-04	2.16	CCF of two components: C12-ACV-OO-F012 & C12-ACV-OO-F030
C12-ACV-OO-F030	2.00E-03	2.63E-03	2.31	AIR OPERATED VALVE F030 FAILS TO CLOSE
C12-BV_-RE-F003B	1.21E-02	8.73E-03	1.71	MISPOSITION OF VALVE F003B
C12-BV_-RE-F013A	4.84E-02	5.83E-03	1.11	MISPOSITION OF VALVE F013A
C12-BV_-RE-F013B	4.84E-02	2.88E-02	1.57	MISPOSITION OF VALVE F013B
C12-BV_-RE-F015A	4.84E-02	5.83E-03	1.11	MISPOSITION OF VALVE F015A

Table 12.9-6

Importance Measure Report for Full-Power Core Damage Frequencies Due to Internal Fires

Event Name	Probability	Fus Ves	Ach W	Description
C12-BV_-RE-F015B	4.84E-02	2.88E-02	1.57	MISPOSITION OF VALVE F015B
C12-BV_-RE-F018B	1.21E-02	8.73E-03	1.71	MISPOSITION OF VALVE FO18B
C12-BV_-RE-F021B	1.21E-02	8.73E-03	1.71	MISPOSITION OF VALVE F021B
C12-MOV-CC-F014_1_2	2.11E-04	2.47E-04	2.17	CCF of two components: C12-MOV-CC-F014A & C12-MOV-CC-F014B
C12-MOV-CC-F020_1_2	2.11E-04	2.47E-04	2.17	CCF of two components: C12-MOV-CC-F020A & C12-MOV-CC-F020B
C12-MOV-CC-F023	4.00E-03	5.34E-03	2.33	MOTOR OPERATED VALVE F023 FAILS TO OPEN
C12-MOV-OO-F024	4.00E-03	5.34E-03	2.33	MOTOR OPERATED VALVE F024 FAILS TO CLOSE
C12-MOV-OO-F062A	4.00E-03	5.34E-03	2.33	MOTOR OPERATED VALVE F062A FAILS TO CLOSE
C12-MOV-OO-F062B	4.00E-03	5.34E-03	2.33	MOTOR OPERATED VALVE F062B FAILS TO CLOSE
C12-ROD-CF-SCRAM	2.50E-07	2.78E-01	1100000	CCF OF CONTROL RODS TO INSERT
C12-SOV-FD-SCRV139	1.70E-06	6.29E-03	3700	CCF TO OPEN (VENT) 0F SCRAM PILOT SOLENOID VALVES SOV-139
C12-UV_-CC-F022	1.00E-04	1.07E-04	2.07	CHECK VALVE F022 FAILS TO OPEN
C41-ACV-OC-F002A	3.72E-04	1.63E-03	5.38	AIR OPERATED VALVE F002A FAILS TO REMAIN OPEN
C41-ACV-OC-F002B	3.72E-04	1.63E-03	5.38	AIR OPERATED VALVE F002B FAILS TO REMAIN OPEN
C41-ACV-OC-F002C	3.72E-04	1.63E-03	5.38	AIR OPERATED VALVE F002C FAILS TO REMAIN OPEN
C41-ACV-OC-F002D	3.72E-04	1.63E-03	5.38	AIR OPERATED VALVE F002D FAILS TO REMAIN OPEN
C41-BV_-OC-F001A	2.63E-04	1.15E-03	5.38	MAINTENANCE VALVE F001A PLUGS/TRANSFERS CLOSED

Table 12.9-6

Importance Measure Report for Full-Power Core Damage Frequencies Due to Internal Fires

Event Name	Probability	Fus Ves	Ach W	Description
C41-BV_-OC-F001B	2.63E-04	1.15E-03	5.38	MAINTENANCE VALVE F001B PLUGS/TRANSFERS CLOSED
C41-BV_-OC-F006A	2.63E-04	1.15E-03	5.38	MAINTENANCE VALVE F006A PLUGS/TRANSFERS CLOSED
C41-BV_-OC-F006B	2.63E-04	1.15E-03	5.38	MAINTENANCE VALVE F006B PLUGS/TRANSFERS CLOSED
C41-SQV-CC_1_2_3	5.56E-06	2.30E-05	5.11	CCF of three components: C41-SQV-CC-F003A & C41-SQV-CC-F003B & C41-SQV-CC-F003C
C41-SQV-CC_1_2_4	5.56E-06	2.30E-05	5.11	CCF of three components: C41-SQV-CC-F003A & C41-SQV-CC-F003B & C41-SQV-CC-F003D
C41-SQV-CC_1_3	5.56E-05	2.43E-04	5.37	CCF of two components: C41-SQV-CC-F003A & C41-SQV-CC-F003C
C41-SQV-CC_1_3_4	5.56E-06	2.30E-05	5.11	CCF of three components: C41-SQV-CC-F003A & C41-SQV-CC-F003C & C41-SQV-CC-F003D
C41-SQV-CC_2_3_4	5.56E-06	2.30E-05	5.11	CCF of three components: C41-SQV-CC-F003B & C41-SQV-CC-F003C & C41-SQV-CC-F003D
C41-SQV-CC_2_4	5.56E-05	2.43E-04	5.37	CCF of two components: C41-SQV-CC-F003B & C41-SQV-CC-F003D
C41-SQV-CC_ALL	1.50E-04	6.57E-04	5.37	CCF of all components in group 'C41-SQV-CC'
C41-TNK-RP-A001A	2.40E-06	9.46E-06	4.86	ACCUMULATOR A001A FAILS CATASTROPHICALLY
C41-TNK-RP-A001B	2.40E-06	9.46E-06	4.86	ACCUMULATOR A001B FAILS CATASTROPHICALLY

Table 12.9-6

Importance Measure Report for Full-Power Core Damage Frequencies Due to Internal Fires

Event Name	Probability	Fus Ves	Ach W	Description
C41-UV_-CC_1_2	2.85E-07	3.74E-07	2.28	CCF of two components: C41-UV_-CC-F004A & C41-UV_-CC-F004B
C41-UV_-CC_1_2_3	2.26E-06	8.82E-06	4.86	CCF of three components: C41-UV_-CC-F004A & C41-UV_-CC-F004B & C41-UV_-CC-F005A
C41-UV_-CC_1_2_4	2.26E-06	8.82E-06	4.86	CCF of three components: C41-UV_-CC-F004A & C41-UV_-CC-F004B & C41-UV_-CC-F005B
C41-UV_-CC_1_3	2.85E-07	3.74E-07	2.28	CCF of two components: C41-UV_-CC-F004A & C41-UV_-CC-F005A
C41-UV_-CC_1_3_4	2.26E-06	8.82E-06	4.86	CCF of three components: C41-UV_-CC-F004A & C41-UV_-CC-F005A & C41-UV_-CC-F005B
C41-UV_-CC_1_4	2.85E-07	3.74E-07	2.28	CCF of two components: C41-UV_-CC-F004A & C41-UV_-CC-F005B
C41-UV_-CC_2_3	2.85E-07	3.74E-07	2.28	CCF of two components: C41-UV_-CC-F004B & C41-UV_-CC-F005A
C41-UV_-CC_2_3_4	2.26E-06	8.82E-06	4.86	CCF of three components: C41-UV_-CC-F004B & C41-UV_-CC-F005A & C41-UV_-CC-F005B
C41-UV_-CC_2_4	2.85E-07	3.74E-07	2.28	CCF of two components: C41-UV_-CC-F004B & C41-UV_-CC-F005B
C41-UV_-CC_3_4	2.85E-07	3.74E-07	2.28	CCF of two components: C41-UV_-CC-F005A & C41-UV_-CC-F005B
C41-UV_-CC_ALL	1.37E-05	5.96E-05	5.31	CCF of all components in group 'C41-UV_-CC'
C41-UV_-CC-F004A	8.00E-04	3.51E-03	5.38	CHECK VALVE F004A FAILS TO OPEN
C41-UV_-CC-F004B	8.00E-04	3.51E-03	5.38	CHECK VALVE F004B FAILS TO OPEN
C41-UV_-CC-F005A	8.00E-04	3.51E-03	5.38	CHECK VALVE F005A FAILS TO OPEN

Table 12.9-6

Importance Measure Report for Full-Power Core Damage Frequencies Due to Internal Fires

Event Name	Probability	Fus Ves	Ach W	Description
C41-UV_-CC-F005B	8.00E-04	3.51E-03	5.38	CHECK VALVE F005B FAILS TO OPEN
C51-CCFSOFTWARE	1.00E-04	5.09E-04	6.09	NMS COMMON CAUSE SOFTWARE FAILURE
C62-CCFSOFTWARE	1.00E-04	9.98E-04	10.94	N-DCIS COMMON CAUSE SOFTWARE FAILURE
C62-CCFSOFTWARE_S	1.00E-04	9.98E-04	10.94	N-DCIS SPURIOUS COMMON CAUSE SOFTWARE FAILURE
C62-DTM-FC-PIPMP_1_2	6.67E-05	5.96E-04	9.89	CCF of two components: C62-DTM-FC-PIPA & C62-DTM-FC-PIPB
C62-LDD-FC-LOADS	1.86E-06	1.14E-05	7.07	COMMON CAUSE FAILURE OF REMAINING NDCIS LOAD DRIVERS
C62-LOG-FC-PIPMP_ALL	1.80E-05	1.44E-04	8.93	CCF of all components in group 'C62-LOG-FC-PIPMP'
C62-LT_-NO-NDCRX_1_2	5.71E-07	1.55E-05	27.85	CCF of two components: C62-LT_-NO-RXLVLA & C62-LT_-NO-RXLVLB
C62-LT_-NO-NDCRX_1_2_3	1.91E-08	4.27E-07	22.94	CCF of three components: C62-LT_-NO-RXLVLA & C62-LT_-NO-RXLVLB & C62-LT_-NO-RXLV
C62-LT_-NO-NDCRX_1_2_4	1.91E-08	4.27E-07	22.94	CCF of three components: C62-LT_-NO-RXLVLA & C62-LT_-NO-RXLVLB & C62-LT_-NO-RXLV
C62-LT_-NO-NDCRX_1_3	5.71E-07	8.84E-06	16.3	CCF of two components: C62-LT_-NO-RXLVLA & C62-LT_-NO-RXLVLC
C62-LT_-NO-NDCRX_1_3_4	1.91E-08	4.27E-07	22.94	CCF of three components: C62-LT_-NO-RXLVLA & C62-LT_-NO-RXLVLC & C62-LT_-NO-RXLV
C62-LT_-NO-NDCRX_1_4	5.71E-07	1.55E-05	27.85	CCF of two components: C62-LT_-NO-RXLVLA & C62-LT_-NO-RXLVLD

Table 12.9-6

Importance Measure Report for Full-Power Core Damage Frequencies Due to Internal Fires

Event Name	Probability	Fus Ves	Ach W	Description
C62-LT_-NO-NDCRX_1_5	5.71E-07	8.84E-06	16.3	CCF of two components: C62-LT_-NO-RXLVLA & C62-LT_-NO-RXLVLE
C62-LT_-NO-NDCRX_1_6	5.71E-07	8.84E-06	16.3	CCF of two components: C62-LT_-NO-RXLVLA & C62-LT_-NO-RXLVLF
C62-LT_-NO-NDCRX_1_7	5.71E-07	8.84E-06	16.3	CCF of two components: C62-LT_-NO-RXLVLA & C62-LT_-NO-RXLVLG
C62-LT_-NO-NDCRX_1_8	5.71E-07	8.84E-06	16.3	CCF of two components: C62-LT_-NO-RXLVLA & C62-LT_-NO-RXLVLH
C62-LT_-NO-NDCRX_2_3	5.71E-07	1.55E-05	27.85	CCF of two components: C62-LT_-NO-RXLVLB & C62-LT_-NO-RXLVLC
C62-LT_-NO-NDCRX_2_3_4	1.91E-08	4.27E-07	22.94	CCF of three components: C62-LT_-NO-RXLVLB & C62-LT_-NO-RXLVLC & C62-LT_-NO-RXLV
C62-LT_-NO-NDCRX_2_4	5.71E-07	6.62E-06	12.55	CCF of two components: C62-LT_-NO-RXLVLB & C62-LT_-NO-RXLVLD
C62-LT_-NO-NDCRX_2_5	5.71E-07	6.62E-06	12.55	CCF of two components: C62-LT_-NO-RXLVLB & C62-LT_-NO-RXLVLE
C62-LT_-NO-NDCRX_2_6	5.71E-07	6.62E-06	12.55	CCF of two components: C62-LT_-NO-RXLVLB & C62-LT_-NO-RXLVLF
C62-LT_-NO-NDCRX_2_7	5.71E-07	6.62E-06	12.55	CCF of two components: C62-LT_-NO-RXLVLB & C62-LT_-NO-RXLVLG
C62-LT_-NO-NDCRX_2_8	5.71E-07	6.62E-06	12.55	CCF of two components: C62-LT_-NO-RXLVLB & C62-LT_-NO-RXLVLH
C62-LT_-NO-NDCRX_3_4	5.71E-07	1.55E-05	27.85	CCF of two components: C62-LT_-NO-RXLVLC & C62-LT_-NO-RXLVLD
C62-LT_-NO-NDCRX_3_5	5.71E-07	8.84E-06	16.3	CCF of two components: C62-LT_-NO-RXLVLC & C62-LT_-NO-RXLVLE
C62-LT_-NO-NDCRX_3_6	5.71E-07	8.84E-06	16.3	CCF of two components: C62-LT_-NO-RXLVLC & C62-LT_-NO-RXLVLF

Table 12.9-6

Importance Measure Report for Full-Power Core Damage Frequencies Due to Internal Fires

Event Name	Probability	Fus Ves	Ach W	Description
C62-LT_-NO-NDCRX_3_7	5.71E-07	8.84E-06	16.3	CCF of two components: C62-LT_-NO-RXLVLC & C62-LT_-NO-RXLVLG
C62-LT_-NO-NDCRX_3_8	5.71E-07	8.84E-06	16.3	CCF of two components: C62-LT_-NO-RXLVLC & C62-LT_-NO-RXLVLH
C62-LT_-NO-NDCRX_4_5	5.71E-07	6.62E-06	12.55	CCF of two components: C62-LT_-NO-RXLVLD & C62-LT_-NO-RXLVLE
C62-LT_-NO-NDCRX_4_6	5.71E-07	6.62E-06	12.55	CCF of two components: C62-LT_-NO-RXLVLD & C62-LT_-NO-RXLVLF
C62-LT_-NO-NDCRX_4_7	5.71E-07	6.62E-06	12.55	CCF of two components: C62-LT_-NO-RXLVLD & C62-LT_-NO-RXLVLG
C62-LT_-NO-NDCRX_4_8	5.71E-07	6.62E-06	12.55	CCF of two components: C62-LT_-NO-RXLVLD & C62-LT_-NO-RXLVLH
C62-LT_-NO-NDCRX_ALL	3.60E-06	3.65E-04	101.94	CCF of all components in group 'C62-LT_-NO-NDCRX'
C62-LT_-NO-RXLVLA	7.20E-05	1.39E-03	20.25	NDCIS RX LEVEL A SENSOR TRANSMITTER FAILS
C62-LT_-NO-RXLVLB	7.20E-05	1.08E-03	16.04	NDCIS RX LEVEL B SENSOR TRANSMITTER FAILS
C62-LT_-NO-RXLVLC	7.20E-05	1.39E-03	20.25	NDCIS RX LEVEL C SENSOR TRANSMITTER FAILS
C62-LT_-NO-RXLVLD	7.20E-05	1.08E-03	16.04	NDCIS RX LEVEL D SENSOR TRANSMITTER FAILS
C62-MOD-FO-CTTMPA	1.09E-04	2.11E-03	20.31	TRANSDUCER SIGNAL CONVERTR FAILS
C62-MOD-FO-CTTMPB	1.09E-04	1.65E-03	16.11	TRANSDUCER SIGNAL CONVERTER FAILURE
C62-MOD-FO-CTTMPC	1.09E-04	2.11E-03	20.31	TRANSDUCER SIGNAL CONVERTER FAILURE
C62-MOD-FO-CTTMPD	1.09E-04	1.65E-03	16.11	TRANSDUCER SIGNAL CONVERTER FAILURE

Table 12.9-6

Importance Measure Report for Full-Power Core Damage Frequencies Due to Internal Fires

Event Name	Probability	Fus Ves	Ach W	Description
C62-MOD-FO-RXLVLA	1.09E-04	2.11E-03	20.31	TRANSDUCER SIGNAL CONVERTR FAILS
C62-MOD-FO-RXLVLB	1.09E-04	1.65E-03	16.11	TRANSDUCER SIGNAL CONVERTER FAILURE
C62-MOD-FO-RXLVLC	1.09E-04	2.11E-03	20.31	TRANSDUCER SIGNAL CONVERTER FAILURE
C62-MOD-FO-RXLVLD	1.09E-04	1.65E-03	16.11	TRANSDUCER SIGNAL CONVERTER FAILURE
C62-MOD-FO-RXPRSA	1.09E-04	3.14E-04	3.87	TRANSDUCER SIGNAL PROCESSOR FAILS
C62-MOD-FO-RXPRSC	1.09E-04	3.14E-04	3.87	TRANSDUCER SIGNAL PROCESSOR FAILS
C62-PSP-FO-DPSEP_1_2	8.00E-08	8.54E-07	11.34	CCF of two components: C62-PSP-FO-DPSAPSA & C62-PSP-FO-DPSAPSB
C62-PSP-FO-DPSEP_1_5_6	4.00E-09	2.13E-07	54.36	CCF of three components: C62-PSP-FO-DPSAPSA & C72-PSP-FO-DPSCNTPSA & C72-PSP-FO-
C62-PSP-FO-DPSEP_2_5_6	4.00E-09	2.13E-07	54.36	CCF of three components: C62-PSP-FO-DPSAPSB & C72-PSP-FO-DPSCNTPSA & C72-PSP-FO-
C62-PSP-FO-DPSEP_3_4	8.00E-08	7.11E-07	9.89	CCF of two components: C62-PSP-FO-DPSBPSA & C62-PSP-FO-DPSBPSB
C62-PSP-FO-DPSEP_3_5_6	4.00E-09	2.13E-07	54.36	CCF of three components: C62-PSP-FO-DPSBPSA & C72-PSP-FO-DPSCNTPSA & C72-PSP-FO-
C62-PSP-FO-DPSEP_4_5_6	4.00E-09	2.13E-07	54.36	CCF of three components: C62-PSP-FO-DPSBPSB & C72-PSP-FO-DPSCNTPSA & C72-PSP-FO-
C62-PSP-FO-DPSEP_5_6	8.00E-08	1.63E-05	202.42	CCF of two components: C72-PSP-FO-DPSCNTPSA & C72-PSP-FO-DPSCNTPSB

Table 12.9-6

Importance Measure Report for Full-Power Core Damage Frequencies Due to Internal Fires

Event Name	Probability	Fus Ves	Ach W	Description
C62-PSP-FO-DPSEP_ALL	3.60E-07	1.01E-04	279.74	CCF of all components in group 'C62-PSP-FO-DPSEP'
C62-PSP-FO-PIPEP_ALL	3.60E-07	1.99E-06	6.41	CCF of all components in group 'C62-PSP-FO-PIPEP'
C62-PT_-NO-DPSRX_1_2	6.40E-07	1.16E-06	2.79	CCF of two components: C62-PT_-NO-RXPRSA & C62-PT_-NO-RXPRSB
C62-PT_-NO-DPSRX_1_3	6.40E-07	1.16E-06	2.79	CCF of two components: C62-PT_-NO-RXPRSA & C62-PT_-NO-RXPRSC
C62-PT_-NO-DPSRX_1_4	6.40E-07	1.16E-06	2.79	CCF of two components: C62-PT_-NO-RXPRSA & C62-PT_-NO-RXPRSD
C62-PT_-NO-DPSRX_2_3	6.40E-07	1.16E-06	2.79	CCF of two components: C62-PT_-NO-RXPRSB & C62-PT_-NO-RXPRSC
C62-PT_-NO-DPSRX_3_4	6.40E-07	1.16E-06	2.79	CCF of two components: C62-PT_-NO-RXPRSC & C62-PT_-NO-RXPRSD
C62-PT_-NO-DPSRX_ALL	1.73E-06	3.15E-06	2.81	CCF of all components in group 'C62-PT_-NO-DPSRX'
C62-PT_-NO-PIPRC_ALL	1.73E-06	3.41E-06	2.94	CCF of all components in group 'C62-PT_-NO-PIPRC'
C62-PT_-NO-RXPRSA	3.46E-05	9.82E-05	3.83	NDCIS RX PRESSURE SENSOR TRANSMITTER A FAILS
C62-PT_-NO-RXPRSC	3.46E-05	9.82E-05	3.83	NDCIS RX PRESSURE SENSOR TRANSMITTER C FAILS
C62-TT_-NO-NDCRX_1_2	4.67E-07	1.25E-05	27.49	CCF of two components: C62-TT_-NO-TEMPA & C62-TT_-NO-TEMPB
C62-TT_-NO-NDCRX_1_2_3	4.67E-08	1.97E-06	42.17	CCF of three components: C62-TT_-NO-TEMPA & C62-TT_-NO-TEMPB & C62-TT_-NO-TEMPC

Table 12.9-6

Importance Measure Report for Full-Power Core Damage Frequencies Due to Internal Fires

Event Name	Probability	Fus Ves	Ach W	Description
C62-TT_-NO-NDCRX_1_2_4	4.67E-08	1.97E-06	42.17	CCF of three components: C62-TT_-NO-TEMPA & C62-TT_-NO-TEMPB & C62-TT_-NO-TEMPD
C62-TT_-NO-NDCRX_1_3	4.67E-07	7.06E-06	15.96	CCF of two components: C62-TT_-NO-TEMPA & C62-TT_-NO-TEMPC
C62-TT_-NO-NDCRX_1_3_4	4.67E-08	1.97E-06	42.17	CCF of three components: C62-TT_-NO-TEMPA & C62-TT_-NO-TEMPC & C62-TT_-NO-TEMPD
C62-TT_-NO-NDCRX_1_4	4.67E-07	1.25E-05	27.49	CCF of two components: C62-TT_-NO-TEMPA & C62-TT_-NO-TEMPD
C62-TT_-NO-NDCRX_2_3	4.67E-07	1.25E-05	27.49	CCF of two components: C62-TT_-NO-TEMPB & C62-TT_-NO-TEMPC
C62-TT_-NO-NDCRX_2_3_4	4.67E-08	1.97E-06	42.17	CCF of three components: C62-TT_-NO-TEMPB & C62-TT_-NO-TEMPC & C62-TT_-NO-TEMPD
C62-TT_-NO-NDCRX_2_4	4.67E-07	5.42E-06	12.53	CCF of two components: C62-TT_-NO-TEMPB & C62-TT_-NO-TEMPD
C62-TT_-NO-NDCRX_3_4	4.67E-07	1.25E-05	27.49	CCF of two components: C62-TT_-NO-TEMPC & C62-TT_-NO-TEMPD
C62-TT_-NO-NDCRX_ALL	1.26E-06	1.15E-04	91.38	CCF of all components in group 'C62-TT_-NO-NDCRX'
C62-TT_-NO-PIPRC_ALL	1.26E-06	2.19E-06	2.72	CCF of all components in group 'C62-TT_-NO-PIPRC'
C62-TT_-NO-TEMPA	2.52E-05	4.77E-04	19.91	TEMPERATURE XMTR FAILS TO RESPOND TO CHANGE IN TEMPERATURE
C62-TT_-NO-TEMPB	2.52E-05	3.73E-04	15.75	TEMPERATURE XMTR FAILS TO RESPOND TO CHANGE IN TEMPERATURE

Table 12.9-6

Importance Measure Report for Full-Power Core Damage Frequencies Due to Internal Fires

Event Name	Probability	Fus Ves	Ach W	Description
C62-TT_-NO-TEMPC	2.52E-05	4.77E-04	19.91	TEMPERATURE XMTR FAILS TO RESPOND TO CHANGE IN TEMPERATURE
C62-TT_-NO-TEMPD	2.52E-05	3.73E-04	15.75	TEMPERATURE XMTR FAILS TO RESPOND TO CHANGE IN TEMPERATURE
C63-CCFSOFTWARE	1.00E-04	3.45E-01	3450	Common cause failure of software
C63-CCFSOFTWARE_S	1.00E-04	2.70E-02	270.16	ESF SPURIOUS COMMON CAUSE SOFTWARE FAILURE
C63-DTM-FC-ESFLG_1_2	1.11E-05	4.42E-05	4.88	CCF of two components: C63-DTM-FC-ESFD1 & C63-DTM-FC-ESFD2
C63-DTM-FC-ESFLG_1_2_3	1.11E-06	3.50E-03	3150	CCF of three components: C63-DTM-FC-ESFD1 & C63-DTM-FC-ESFD2 & C63-DTM-FC-ESFD3
C63-DTM-FC-ESFLG_1_2_4	1.11E-06	3.50E-03	3150	CCF of three components: C63-DTM-FC-ESFD1 & C63-DTM-FC-ESFD2 & C63-DTM-FC-ESFD4
C63-DTM-FC-ESFLG_1_3	1.11E-05	4.30E-05	4.79	CCF of two components: C63-DTM-FC-ESFD1 & C63-DTM-FC-ESFD3
C63-DTM-FC-ESFLG_1_3_4	1.11E-06	3.50E-03	3150	CCF of three components: C63-DTM-FC-ESFD1 & C63-DTM-FC-ESFD3 & C63-DTM-FC-ESFD4
C63-DTM-FC-ESFLG_1_4	1.11E-05	5.12E-05	5.5	CCF of two components: C63-DTM-FC-ESFD1 & C63-DTM-FC-ESFD4
C63-DTM-FC-ESFLG_2_3	1.11E-05	3.60E-05	4.17	CCF of two components: C63-DTM-FC-ESFD2 & C63-DTM-FC-ESFD3
C63-DTM-FC-ESFLG_2_3_4	1.11E-06	3.50E-03	3150	CCF of three components: C63-DTM-FC-ESFD2 & C63-DTM-FC-ESFD3 & C63-DTM-FC-ESFD4

Table 12.9-6

Importance Measure Report for Full-Power Core Damage Frequencies Due to Internal Fires

Event Name	Probability	Fus Ves	Ach W	Description
C63-DTM-FC-ESFLG_2_4	1.11E-05	4.42E-05	4.88	CCF of two components: C63-DTM-FC-ESFD2 & C63-DTM-FC-ESFD4
C63-DTM-FC-ESFLG_3_4	1.11E-05	4.30E-05	4.79	CCF of two components: C63-DTM-FC-ESFD3 & C63-DTM-FC-ESFD4
C63-DTM-FC-ESFLG_ALL	3.00E-05	9.97E-02	3320	CCF of all components in group 'C63-DTM-FC-ESFLG'
C63-LDD-FC-ESFLOADS	1.86E-06	6.10E-03	3270	CCF OF ALL ESF LOAD DRIVERS
C63-LOG-FC-ESFLG_ALL	1.80E-05	6.10E-02	3390	CCF of all components in group 'C63-LOG-FC-ESFLG'
C63-LT_-NO-ATWRX_ALL	3.60E-06	1.51E-05	5.14	CCF of all components in group 'C63-LT_-NO-ATWRX'
C63-LT_-NO-ESFPX_ALL	3.60E-06	2.10E-04	58.87	CCF of all components in group 'C63-LT_-NO-ESFPX'
C63-LT_-NO-ESFRX_1_2_3	1.91E-08	4.62E-05	2390	CCF of three components: C63-LT_-NO-ESFRXLVLA & C63-LT_-NO-ESFRXLVLB & C63-LT_-N
C63-LT_-NO-ESFRX_1_2_4	1.91E-08	4.62E-05	2390	CCF of three components: C63-LT_-NO-ESFRXLVLA & C63-LT_-NO-ESFRXLVLB & C63-LT_-N
C63-LT_-NO-ESFRX_1_3_4	1.91E-08	4.62E-05	2390	CCF of three components: C63-LT_-NO-ESFRXLVLA & C63-LT_-NO-ESFRXLVLC & C63-LT_-N
C63-LT_-NO-ESFRX_2_3_4	1.91E-08	4.62E-05	2390	CCF of three components: C63-LT_-NO-ESFRXLVLB & C63-LT_-NO-ESFRXLVLC & C63-LT_-N
C63-LT_-NO-ESFRX_ALL	3.60E-06	1.13E-02	3130	CCF of all components in group 'C63-LT_-NO-ESFRX'

Table 12.9-6

Importance Measure Report for Full-Power Core Damage Frequencies Due to Internal Fires

Event Name	Probability	Fus Ves	Ach W	Description
C63-LT_-NO-RPSRX_1_2_3	1.33E-07	5.71E-05	428.43	CCF of three components: C63-LT_-NO-RPSRXLVLA & C63-LT_-NO-RPSRXLVLB & C63-LT_-N
C63-LT_-NO-RPSRX_1_2_4	1.33E-07	5.71E-05	428.43	CCF of three components: C63-LT_-NO-RPSRXLVLA & C63-LT_-NO-RPSRXLVLB & C63-LT_-N
C63-LT_-NO-RPSRX_1_3_4	1.33E-07	5.71E-05	428.43	CCF of three components: C63-LT_-NO-RPSRXLVLA & C63-LT_-NO-RPSRXLVLC & C63-LT_-N
C63-LT_-NO-RPSRX_2_3_4	1.33E-07	5.71E-05	428.43	CCF of three components: C63-LT_-NO-RPSRXLVLB & C63-LT_-NO-RPSRXLVLC & C63-LT_-N
C63-LT_-NO-RPSRX_ALL	3.60E-06	1.59E-03	442.24	CCF of all components in group 'C63-LT_-NO-RPSRX'
C63-PSP-FO-ATWEP_ALL	3.60E-07	4.80E-07	2.28	CCF of all components in group 'C63-PSP-FO-ATWEP'
C63-PSP-FO-ESFEP_ALL	3.60E-07	1.92E-04	528.64	CCF of all components in group 'C63-PSP-FO-ESFEP'
C63-PT_-NO-ATWRX_ALL	1.73E-06	6.67E-06	4.78	CCF of all components in group 'C63-PT_-NO-ATWRX'
C63-PT_-NO-ESFRX_1_2_3	6.40E-08	1.23E-06	20.18	CCF of three components: C63-PT_-NO-ESFRXPRSA & C63-PT_-NO-ESFRXPRSB & C63-PT_-N
C63-PT_-NO-ESFRX_1_2_4	6.40E-08	1.23E-06	20.18	CCF of three components: C63-PT_-NO-ESFRXPRSA & C63-PT_-NO-ESFRXPRSB & C63-PT_-N
C63-PT_-NO-ESFRX_1_3_4	6.40E-08	1.23E-06	20.18	CCF of three components: C63-PT_-NO-ESFRXPRSA & C63-PT_-NO-ESFRXPRSC & C63-PT_-N

Table 12.9-6

Importance Measure Report for Full-Power Core Damage Frequencies Due to Internal Fires

Event Name	Probability	Fus Ves	Ach W	Description
C63-PT_-NO-ESFRX_2_3_4	6.40E-08	1.23E-06	20.18	CCF of three components: C63-PT_-NO-ESFRXPRSB & C63-PT_-NO-ESFRXPRSC & C63-PT_-N
C63-PT_-NO-ESFRX_ALL	1.73E-06	4.49E-05	26.85	CCF of all components in group 'C63-PT_-NO-ESFRX'
C71-ACT-FC_ALL	5.76E-07	1.25E-06	3.1	CCF of all components in group 'C71-ACT-FC'
C71-ACT-FC-S_ALL	5.76E-07	1.08E-06	2.84	CCF of all components in group 'C71-ACT-FC-S'
C71-CCFSOFTWARE	1.00E-04	4.45E-02	446.1	RPS COMMON CAUSE SOFTWARE FAILURE
C71-DTM-FC-R_1_2_3	1.11E-06	4.86E-04	438.21	CCF of three components: C71-DTM-FC-RPSDIV1 & C71-DTM-FC-RPSDIV2 & C71-DTM-FC-RP
C71-DTM-FC-R_1_2_4	1.11E-06	4.86E-04	438.21	CCF of three components: C71-DTM-FC-RPSDIV1 & C71-DTM-FC-RPSDIV2 & C71-DTM-FC-RP
C71-DTM-FC-R_1_3_4	1.11E-06	4.86E-04	438.21	CCF of three components: C71-DTM-FC-RPSDIV1 & C71-DTM-FC-RPSDIV3 & C71-DTM-FC-RP
C71-DTM-FC-R_2_3_4	1.11E-06	4.86E-04	438.21	CCF of three components: C71-DTM-FC-RPSDIV2 & C71-DTM-FC-RPSDIV3 & C71-DTM-FC-RP
C71-DTM-FC-R_ALL	3.00E-05	1.33E-02	445.38	CCF of all components in group 'C71-DTM-FC-R'
C71-LDD-FC-2OF4G	1.86E-06	6.68E-04	360.17	CCF LOAD DRIVER (2 or more of 4 GROUPS)

Table 12.9-6

Importance Measure Report for Full-Power Core Damage Frequencies Due to Internal Fires

Event Name	Probability	Fus Ves	Ach W	Description
C71-OLU-FC-R_5_6_7	9.52E-08	4.08E-05	427.34	CCF of three components: C71-OLU-FC-RPSDIV1 & C71-OLU-FC-RPSDIV2 & C71-OLU-FC-RP
C71-OLU-FC-R_5_6_8	9.52E-08	4.08E-05	427.34	CCF of three components: C71-OLU-FC-RPSDIV1 & C71-OLU-FC-RPSDIV2 & C71-OLU-FC-RP
C71-OLU-FC-R_5_7_8	9.52E-08	4.08E-05	427.34	CCF of three components: C71-OLU-FC-RPSDIV1 & C71-OLU-FC-RPSDIV3 & C71-OLU-FC-RP
C71-OLU-FC-R_6_7_8	9.52E-08	4.08E-05	427.34	CCF of three components: C71-OLU-FC-RPSDIV2 & C71-OLU-FC-RPSDIV3 & C71-OLU-FC-RP
C71-OLU-FC-R_ALL	1.80E-05	7.99E-03	444.82	CCF of all components in group 'C71-OLU-FC-R'
C71-SLU-FC-N_1_2_3	1.67E-06	6.58E-06	4.88	CCF of three components: C71-SLU-FC-NMSDIV1 & C71-SLU-FC-NMSDIV2 & C71-SLU-FC-NM
C71-SLU-FC-N_1_2_4	1.67E-06	6.58E-06	4.88	CCF of three components: C71-SLU-FC-NMSDIV1 & C71-SLU-FC-NMSDIV2 & C71-SLU-FC-NM
C71-SLU-FC-N_1_3_4	1.67E-06	6.58E-06	4.88	CCF of three components: C71-SLU-FC-NMSDIV1 & C71-SLU-FC-NMSDIV3 & C71-SLU-FC-NM
C71-SLU-FC-N_2_3_4	1.67E-06	6.58E-06	4.88	CCF of three components: C71-SLU-FC-NMSDIV2 & C71-SLU-FC-NMSDIV3 & C71-SLU-FC-NM
C71-SLU-FC-N_ALL	4.50E-05	2.29E-04	6.07	CCF of all components in group 'C71-SLU-FC-N'

Table 12.9-6

Importance Measure Report for Full-Power Core Damage Frequencies Due to Internal Fires

Event Name	Probability	Fus Ves	Ach W	Description
C71-SLU-FC-R_1_2_3	1.67E-06	7.30E-04	438.77	CCF of three components: C71-SLU-FC-RPSDIV1 & C71-SLU-FC-RPSDIV2 & C71-SLU-FC-RP
C71-SLU-FC-R_1_2_4	1.67E-06	7.30E-04	438.77	CCF of three components: C71-SLU-FC-RPSDIV1 & C71-SLU-FC-RPSDIV2 & C71-SLU-FC-RP
C71-SLU-FC-R_1_3	1.67E-05	1.79E-05	2.07	CCF of two components: C71-SLU-FC-RPSDIV1 & C71-SLU-FC-RPSDIV3
C71-SLU-FC-R_1_3_4	1.67E-06	7.30E-04	438.77	CCF of three components: C71-SLU-FC-RPSDIV1 & C71-SLU-FC-RPSDIV3 & C71-SLU-FC-RP
C71-SLU-FC-R_1_4	1.67E-05	1.84E-05	2.1	CCF of two components: C71-SLU-FC-RPSDIV1 & C71-SLU-FC-RPSDIV4
C71-SLU-FC-R_2_3	1.67E-05	1.84E-05	2.1	CCF of two components: C71-SLU-FC-RPSDIV2 & C71-SLU-FC-RPSDIV3
C71-SLU-FC-R_2_3_4	1.67E-06	7.30E-04	438.77	CCF of three components: C71-SLU-FC-RPSDIV2 & C71-SLU-FC-RPSDIV3 & C71-SLU-FC-RP
C71-SLU-FC-R_2_4	1.67E-05	1.89E-05	2.12	CCF of two components: C71-SLU-FC-RPSDIV2 & C71-SLU-FC-RPSDIV4
C71-SLU-FC-R_ALL	4.50E-05	2.00E-02	445.56	CCF of all components in group 'C71-SLU-FC-R'
C71-SLU-FC-S_1_2_3	1.67E-06	3.33E-06	2.95	CCF of three components: C71-SLU-FC-SRNDIV1 & C71-SLU-FC-SRNDIV2 & C71-SLU-FC-SR
C71-SLU-FC-S_1_2_4	1.67E-06	3.33E-06	2.95	CCF of three components: C71-SLU-FC-SRNDIV1 & C71-SLU-FC-SRNDIV2 & C71-SLU-FC-SR

Table 12.9-6

Importance Measure Report for Full-Power Core Damage Frequencies Due to Internal Fires

Event Name	Probability	Fus Ves	Ach W	Description
C71-SLU-FC-S_1_3_4	1.67E-06	3.33E-06	2.95	CCF of three components: C71-SLU-FC-SRNDIV1 & C71-SLU-FC-SRNDIV3 & C71-SLU-FC-SR
C71-SLU-FC-S_2_3_4	1.67E-06	3.33E-06	2.95	CCF of three components: C71-SLU-FC-SRNDIV2 & C71-SLU-FC-SRNDIV3 & C71-SLU-FC-SR
C71-SLU-FC-S_ALL	4.50E-05	1.33E-04	3.95	CCF of all components in group 'C71-SLU-FC-S'
C71-XHE-FO-SCRAM	1.00E-01	9.33E-02	1.84	OPERATOR FAILS TO PERFORM MANUAL SCRAM
C72-CCFSOFTWARE	1.00E-04	3.60E-02	360.22	COMMON CAUSE FAILURE OF DPS PROCESSORS
C72-LDD-FC-LOADS	1.86E-06	5.79E-04	311.02	COMMON CAUSE FAILURE OF DPS LOAD DRIVERS
C72-LDD-FC-S1F004A	1.09E-03	6.46E-03	6.91	F004A FIRST SERIES LOAD DRIVER FAILS ACTUATE
C72-LDD-FC-S1F004B	1.09E-03	5.65E-03	6.17	F004B FIRST SERIES LOAD DRIVER FAILS ACTUATE
C72-LDD-FC-S1F004C	1.09E-03	6.46E-03	6.91	F004C FIRST SERIES LOAD DRIVER FAILS ACTUATE
C72-LDD-FC-S1F004D	1.09E-03	5.65E-03	6.17	F004D FIRST SERIES LOAD DRIVER FAILS ACTUATE
C72-LDD-FC-S1F004E	1.09E-03	6.46E-03	6.91	F004E FIRST SERIES LOAD DRIVER FAILS ACTUATE
C72-LDD-FC-S1F004F	1.09E-03	5.65E-03	6.17	F004F FIRST SERIES LOAD DRIVER FAILS ACTUATE
C72-LDD-FC-S1F004G	1.09E-03	6.46E-03	6.91	F004G FIRST SERIES LOAD DRIVER FAILS ACTUATE

Table 12.9-6

Importance Measure Report for Full-Power Core Damage Frequencies Due to Internal Fires

Event Name	Probability	Fus Ves	Ach W	Description
C72-LDD-FC-S1F004H	1.09E-03	5.65E-03	6.17	F004H FIRST SERIES LOAD DRIVER FAILS ACTUATE
C72-LDD-FC-S2F004A	1.09E-03	6.46E-03	6.91	F004A SECOND SERIES LOAD DRIVER FAILS TO ACTUATE
C72-LDD-FC-S2F004B	1.09E-03	5.65E-03	6.17	F004B SECOND SERIES LOAD DRIVER FAILS TO ACTUATE
C72-LDD-FC-S2F004C	1.09E-03	6.46E-03	6.91	F004C SECOND SERIES LOAD DRIVER FAILS TO ACTUATE
C72-LDD-FC-S2F004D	1.09E-03	5.65E-03	6.17	F004D SECOND SERIES LOAD DRIVER FAILS TO ACTUATE
C72-LDD-FC-S2F004E	1.09E-03	6.46E-03	6.91	F004E SECOND SERIES LOAD DRIVER FAILS TO ACTUATE
C72-LDD-FC-S2F004F	1.09E-03	5.65E-03	6.17	F004F SECOND SERIES LOAD DRIVER FAILS TO ACTUATE
C72-LDD-FC-S2F004G	1.09E-03	6.46E-03	6.91	F004G SECOND SERIES LOAD DRIVER FAILS TO ACTUATE
C72-LDD-FC-S2F004H	1.09E-03	5.65E-03	6.17	F004H SECOND SERIES LOAD DRIVER FAILS TO ACTUATE
C72-LDD-FC-S3F004A	1.09E-03	6.46E-03	6.91	F004A THIRD SERIES LOAD DRIVER FAILS TO ACTUATE
C72-LDD-FC-S3F004B	1.09E-03	5.65E-03	6.17	F004B THIRD SERIES LOAD DRIVER FAILS TO ACTUATE
C72-LDD-FC-S3F004C	1.09E-03	6.46E-03	6.91	F004C THIRD SERIES LOAD DRIVER FAILS TO ACTUATE
C72-LDD-FC-S3F004D	1.09E-03	5.65E-03	6.17	F004D THIRD SERIES LOAD DRIVER FAILS TO ACTUATE
C72-LDD-FC-S3F004E	1.09E-03	6.46E-03	6.91	F004E THIRD SERIES LOAD DRIVER FAILS TO ACTUATE

Table 12.9-6

Importance Measure Report for Full-Power Core Damage Frequencies Due to Internal Fires

Event Name	Probability	Fus Ves	Ach W	Description
C72-LDD-FC-S3F004F	1.09E-03	5.65E-03	6.17	F004F THIRD SERIES LOAD DRIVER FAILS TO ACTUATE
C72-LDD-FC-S3F004G	1.09E-03	6.46E-03	6.91	F004G THIRD SERIES LOAD DRIVER FAILS TO ACTUATE
C72-LDD-FC-S3F004H	1.09E-03	5.65E-03	6.17	F004H THIRD SERIES LOAD DRIVER FAILS TO ACTUATE
C72-LOG-FC-D_1_2	1.00E-05	3.45E-03	344.85	CCF of two components: C72-LOG-FC-D1DPS & C72-LOG-FC-D2DPS
C72-LOG-FC-D_1_2_3	2.00E-06	6.54E-04	326.07	CCF of three components: C72-LOG-FC-D1DPS & C72-LOG-FC-D2DPS & C72-LOG-FC-D3DPS
C72-LOG-FC-D_1_3	1.00E-05	3.45E-03	344.85	CCF of two components: C72-LOG-FC-D1DPS & C72-LOG-FC-D3DPS
C72-LOG-FC-D_2_3	1.00E-05	3.45E-03	344.85	CCF of two components: C72-LOG-FC-D2DPS & C72-LOG-FC-D3DPS
C74-ATM-FC-L2_ALL	5.00E-06	2.13E-05	5.2	CCF of all components in group 'C74-ATM-FC-L2'
C74-ATM-FC-PR_ALL	5.00E-06	2.13E-05	5.2	CCF of all components in group 'C74-ATM-FC-PR'
C74-LOG-FC-AT-_1_2_3	6.67E-07	1.44E-06	3.11	CCF of three components: C74-LOG-FC-ATWSD1 & C74-LOG-FC-ATWSD2 & C74-LOG-FC-ATWS
C74-LOG-FC-AT-_1_2_4	6.67E-07	1.44E-06	3.11	CCF of three components: C74-LOG-FC-ATWSD1 & C74-LOG-FC-ATWSD2 & C74-LOG-FC-ATWS
C74-LOG-FC-AT-_1_3_4	6.67E-07	1.44E-06	3.11	CCF of three components: C74-LOG-FC-ATWSD1 & C74-LOG-FC-ATWSD3 & C74-LOG-FC-ATWS

Table 12.9-6

Importance Measure Report for Full-Power Core Damage Frequencies Due to Internal Fires

Event Name	Probability	Fus Ves	Ach W	Description
C74-LOG-FC-AT-_2_3_4	6.67E-07	1.44E-06	3.11	CCF of three components: C74-LOG-FC-ATWSD2 & C74-LOG-FC-ATWSD3 & C74-LOG-FC-ATWS
C74-LOG-FC-AT-_ALL	1.80E-05	8.04E-05	5.45	CCF of all components in group 'C74-LOG-FC-AT-'
E50-SQV-CC-INJ_1_3_5	7.94E-07	1.78E-06	3.23	CCF of three components: E50-SQV-CC-INJ-F002A & E50-SQV-CC-INJ-F002C & E50-SQV-C
E50-SQV-CC-INJ_1_3_7	7.94E-07	1.78E-06	3.23	CCF of three components: E50-SQV-CC-INJ-F002A & E50-SQV-CC-INJ-F002C & E50-SQV-C
E50-SQV-CC-INJ_1_5_7	7.94E-07	1.78E-06	3.23	CCF of three components: E50-SQV-CC-INJ-F002A & E50-SQV-CC-INJ-F002E & E50-SQV-C
E50-SQV-CC-INJ_2_4_6	7.94E-07	1.58E-06	2.99	CCF of three components: E50-SQV-CC-INJ-F002B & E50-SQV-CC-INJ-F002D & E50-SQV-C
E50-SQV-CC-INJ_2_4_8	7.94E-07	1.58E-06	2.99	CCF of three components: E50-SQV-CC-INJ-F002B & E50-SQV-CC-INJ-F002D & E50-SQV-C
E50-SQV-CC-INJ_2_6_8	7.94E-07	1.58E-06	2.99	CCF of three components: E50-SQV-CC-INJ-F002B & E50-SQV-CC-INJ-F002F & E50-SQV-C
E50-SQV-CC-INJ_3_5_7	7.94E-07	1.78E-06	3.23	CCF of three components: E50-SQV-CC-INJ-F002C & E50-SQV-CC-INJ-F002E & E50-SQV-C
E50-SQV-CC-INJ_4_6_8	7.94E-07	1.58E-06	2.99	CCF of three components: E50-SQV-CC-INJ-F002D & E50-SQV-CC-INJ-F002F & E50-SQV-C

Table 12.9-6

Importance Measure Report for Full-Power Core Damage Frequencies Due to Internal Fires

Event Name	Probability	Fus Ves	Ach W	Description
E50-SQV-CC-INJ_ALL	1.50E-04	2.76E-02	184.48	CCF of all components in group 'E50-SQV-CC-INJ'
E50-UV_-CC-INJ_1_3_5	4.03E-07	8.89E-07	3.21	CCF of three components: E50-UV_-CC-INJ-F003A & E50-UV_-CC-INJ-F003C & E50-UV_-C
E50-UV_-CC-INJ_1_3_7	4.03E-07	8.89E-07	3.21	CCF of three components: E50-UV_-CC-INJ-F003A & E50-UV_-CC-INJ-F003C & E50-UV_-C
E50-UV_-CC-INJ_1_5_7	4.03E-07	8.89E-07	3.21	CCF of three components: E50-UV_-CC-INJ-F003A & E50-UV_-CC-INJ-F003E & E50-UV_-C
E50-UV_-CC-INJ_2_4_6	4.03E-07	8.18E-07	2.99	CCF of three components: E50-UV_-CC-INJ-F003B & E50-UV_-CC-INJ-F003D & E50-UV_-C
E50-UV_-CC-INJ_2_4_8	4.03E-07	8.18E-07	2.99	CCF of three components: E50-UV_-CC-INJ-F003B & E50-UV_-CC-INJ-F003D & E50-UV_-C
E50-UV_-CC-INJ_2_6_8	4.03E-07	8.18E-07	2.99	CCF of three components: E50-UV_-CC-INJ-F003B & E50-UV_-CC-INJ-F003F & E50-UV_-C
E50-UV_-CC-INJ_3_5_7	4.03E-07	8.89E-07	3.21	CCF of three components: E50-UV_-CC-INJ-F003C & E50-UV_-CC-INJ-F003E & E50-UV_-C
E50-UV_-CC-INJ_4_6_8	4.03E-07	8.18E-07	2.99	CCF of three components: E50-UV_-CC-INJ-F003D & E50-UV_-CC-INJ-F003F & E50-UV_-C
E50-UV_-CC-INJ_ALL	1.72E-05	2.74E-03	159.95	CCF of all components in group 'E50-UV_-CC-INJ'

Table 12.9-6

Importance Measure Report for Full-Power Core Damage Frequencies Due to Internal Fires

Event Name	Probability	Fus Ves	Ach W	Description
G31-UV_-OO_1_2	5.26E-05	5.46E-05	2.02	CCF of two components: G31-UV_-OO-F023A & G31-UV_-OO-F024A
N21-XHE-FO-FWRERUN	1.76E-01	1.40E-02	1.07	OPERATOR FAILS TO RESTART FDW AFTER RUNBACK - ATWS
P21-ACV-OO-F0016_1_2	1.93E-04	5.89E-04	4.04	CCF of two components: P21-ACV-OO-F016A & P21-ACV-OO-F016B
P21-AHU-FR_1_2	1.26E-05	3.10E-05	3.44	CCF of two components: P21-AHU-FR-RCCWA & P21-AHU-FR-RCCWB
P21-MP_-FR_ALL	1.33E-05	3.27E-05	3.44	CCF of all components in group 'P21-MP_-FR'
P41-FAN-FR_1_2	4.44E-06	2.79E-05	7.26	CCF of two components: P41-FAN-FR-0001A & P41-FAN-FR-0001B
P41-FAN-FR_1_2_3	4.44E-07	2.44E-06	6.42	CCF of three components: P41-FAN-FR-0001A & P41-FAN-FR-0001B & P41-FAN-FR-0002A
P41-FAN-FR_1_2_4	4.44E-07	2.44E-06	6.42	CCF of three components: P41-FAN-FR-0001A & P41-FAN-FR-0001B & P41-FAN-FR-0002B
P41-FAN-FR_1_3_4	4.44E-07	2.44E-06	6.42	CCF of three components: P41-FAN-FR-0001A & P41-FAN-FR-0002A & P41-FAN-FR-0002B
P41-FAN-FR_1_4	4.44E-06	2.79E-05	7.26	CCF of two components: P41-FAN-FR-0001A & P41-FAN-FR-0002B
P41-FAN-FR_2_3	4.44E-06	2.79E-05	7.26	CCF of two components: P41-FAN-FR-0001B & P41-FAN-FR-0002A
P41-FAN-FR_2_3_4	4.44E-07	2.44E-06	6.42	CCF of three components: P41-FAN-FR-0001B & P41-FAN-FR-0002A & P41-FAN-FR-0002B

Table 12.9-6

Importance Measure Report for Full-Power Core Damage Frequencies Due to Internal Fires

Event Name	Probability	Fus Ves	Ach W	Description
P41-FAN-FR_3_4	4.44E-06	2.79E-05	7.26	CCF of two components: P41-FAN-FR-0002A & P41-FAN-FR-0002B
P41-FAN-FR_ALL	1.20E-05	8.98E-05	8.44	CCF of all components in group 'P41-FAN-FR'
P41-MPW-FR_ALL	3.20E-06	2.05E-05	7.36	CCF of all components in group 'P41-MPW-FR'
P41-STR-PG_1_2_3	2.11E-07	1.12E-06	6.15	CCF of three components: P41-STR-PG-D01A & P41-STR-PG-D01B & P41-STR-PG-D02A
P41-STR-PG_1_2_4	2.11E-07	1.12E-06	6.15	CCF of three components: P41-STR-PG-D01A & P41-STR-PG-D01B & P41-STR-PG-D02B
P41-STR-PG_1_3_4	2.11E-07	1.12E-06	6.15	CCF of three components: P41-STR-PG-D01A & P41-STR-PG-D02A & P41-STR-PG-D02B
P41-STR-PG_2_3_4	2.11E-07	1.12E-06	6.15	CCF of three components: P41-STR-PG-D01B & P41-STR-PG-D02A & P41-STR-PG-D02B
P41-STR-PG_ALL	5.68E-06	3.96E-05	7.92	CCF of all components in group 'P41-STR-PG'
R10-LOSP-EPRI	3.00E-03	3.05E-02	11.09	CONSEQUENTIAL LOSS OF PREFERRED OFFSITE POWER DUE TO A TRANSIENT
R11-BAC-LP-100A3	4.80E-06	3.03E-05	7.29	6.9 KV AC PIP-A LOADS BUS 1000A3 FAILS DURING OPERATION
R11-BAC-LP-PIP_1_2	2.53E-07	1.32E-06	6.14	CCF of two components: R11-BAC-LP-100A3 & R11-BAC-LP-100B3
R11-BAC-TM-100A3	4.80E-06	3.03E-05	7.29	6.9 KV AC PIP-A LOADS BUS 1000A3 IN MAINTENANCE

Table 12.9-6

Importance Measure Report for Full-Power Core Damage Frequencies Due to Internal Fires

Event Name	Probability	Fus Ves	Ach W	Description
R13-INV-FC-CCFNSR_1_2_5	2.11E-07	2.40E-06	12.32	CCF of three components: R13-INV-FC-R13A1 & R13-INV-FC-R13A2 & R13-INV-FC-R13C
R13-INV-FC-CCFNSR_1_3_5	2.11E-07	5.35E-05	253.73	CCF of three components: R13-INV-FC-R13A1 & R13-INV-FC-R13B1 & R13-INV-FC-R13C
R13-INV-FC-CCFNSR_1_4_5	2.11E-07	2.40E-06	12.32	CCF of three components: R13-INV-FC-R13A1 & R13-INV-FC-R13B2 & R13-INV-FC-R13C
R13-INV-FC-CCFNSR_1_5	3.16E-06	4.62E-05	15.52	CCF of two components: R13-INV-FC-R13A1 & R13-INV-FC-R13C
R13-INV-FC-CCFNSR_2_3_5	2.11E-07	1.80E-05	86.26	CCF of three components: R13-INV-FC-R13A2 & R13-INV-FC-R13B1 & R13-INV-FC-R13C
R13-INV-FC-CCFNSR_3_4_5	2.11E-07	1.80E-05	86.26	CCF of three components: R13-INV-FC-R13B1 & R13-INV-FC-R13B2 & R13-INV-FC-R13C
R13-INV-FC-CCFNSR_3_5	3.16E-06	2.87E-04	91.86	CCF of two components: R13-INV-FC-R13B1 & R13-INV-FC-R13C
R13-INV-FC-CCFNSR_ALL	1.14E-05	3.92E-03	345.36	CCF of all components in group 'R13-INV-FC-CCFNSR'
R13-INV-FC-CCFSR_1_3_5	6.01E-08	3.29E-06	54.38	CCF of three components: R13-INV-FC-R1311 & R13-INV-FC-R1321 & R13-INV-FC-R1331
R13-INV-FC-CCFSR_1_3_6	6.01E-08	3.29E-06	54.38	CCF of three components: R13-INV-FC-R1311 & R13-INV-FC-R1321 & R13-INV-FC-R1332

Table 12.9-6

Importance Measure Report for Full-Power Core Damage Frequencies Due to Internal Fires

Event Name	Probability	Fus Ves	Ach W	Description
R13-INV-FC-CCFSR_1_3_7	6.01E-08	1.03E-06	16.97	CCF of three components: R13-INV-FC-R1311 & R13-INV-FC-R1321 & R13-INV-FC-R1341
R13-INV-FC-CCFSR_1_3_8	6.01E-08	1.03E-06	16.97	CCF of three components: R13-INV-FC-R1311 & R13-INV-FC-R1321 & R13-INV-FC-R1342
R13-INV-FC-CCFSR_1_4_5	6.01E-08	3.29E-06	54.38	CCF of three components: R13-INV-FC-R1311 & R13-INV-FC-R1322 & R13-INV-FC-R1331
R13-INV-FC-CCFSR_1_4_6	6.01E-08	3.29E-06	54.38	CCF of three components: R13-INV-FC-R1311 & R13-INV-FC-R1322 & R13-INV-FC-R1332
R13-INV-FC-CCFSR_1_4_7	6.01E-08	1.03E-06	16.97	CCF of three components: R13-INV-FC-R1311 & R13-INV-FC-R1322 & R13-INV-FC-R1341
R13-INV-FC-CCFSR_1_4_8	6.01E-08	1.03E-06	16.97	CCF of three components: R13-INV-FC-R1311 & R13-INV-FC-R1322 & R13-INV-FC-R1342
R13-INV-FC-CCFSR_1_5_7	6.01E-08	1.03E-06	16.97	CCF of three components: R13-INV-FC-R1311 & R13-INV-FC-R1331 & R13-INV-FC-R1341
R13-INV-FC-CCFSR_1_5_8	6.01E-08	1.03E-06	16.97	CCF of three components: R13-INV-FC-R1311 & R13-INV-FC-R1331 & R13-INV-FC-R1342
R13-INV-FC-CCFSR_1_6_7	6.01E-08	1.03E-06	16.97	CCF of three components: R13-INV-FC-R1311 & R13-INV-FC-R1332 & R13-INV-FC-R1341

Table 12.9-6

Importance Measure Report for Full-Power Core Damage Frequencies Due to Internal Fires

Event Name	Probability	Fus Ves	Ach W	Description
R13-INV-FC-CCFSR_1_6_8	6.01E-08	1.03E-06	16.97	CCF of three components: R13-INV-FC-R1311 & R13-INV-FC-R1332 & R13-INV-FC-R1342
R13-INV-FC-CCFSR_2_3_5	6.01E-08	3.29E-06	54.38	CCF of three components: R13-INV-FC-R1312 & R13-INV-FC-R1321 & R13-INV-FC-R1331
R13-INV-FC-CCFSR_2_3_6	6.01E-08	3.29E-06	54.38	CCF of three components: R13-INV-FC-R1312 & R13-INV-FC-R1321 & R13-INV-FC-R1332
R13-INV-FC-CCFSR_2_3_7	6.01E-08	1.03E-06	16.97	CCF of three components: R13-INV-FC-R1312 & R13-INV-FC-R1321 & R13-INV-FC-R1341
R13-INV-FC-CCFSR_2_3_8	6.01E-08	1.03E-06	16.97	CCF of three components: R13-INV-FC-R1312 & R13-INV-FC-R1321 & R13-INV-FC-R1342
R13-INV-FC-CCFSR_2_4_5	6.01E-08	3.29E-06	54.38	CCF of three components: R13-INV-FC-R1312 & R13-INV-FC-R1322 & R13-INV-FC-R1331
R13-INV-FC-CCFSR_2_4_6	6.01E-08	3.29E-06	54.38	CCF of three components: R13-INV-FC-R1312 & R13-INV-FC-R1322 & R13-INV-FC-R1332
R13-INV-FC-CCFSR_2_4_7	6.01E-08	1.03E-06	16.97	CCF of three components: R13-INV-FC-R1312 & R13-INV-FC-R1322 & R13-INV-FC-R1341
R13-INV-FC-CCFSR_2_4_8	6.01E-08	1.03E-06	16.97	CCF of three components: R13-INV-FC-R1312 & R13-INV-FC-R1322 & R13-INV-FC-R1342

Table 12.9-6

Importance Measure Report for Full-Power Core Damage Frequencies Due to Internal Fires

Event Name	Probability	Fus Ves	Ach W	Description
R13-INV-FC-CCFSR_2_5_7	6.01E-08	1.03E-06	16.97	CCF of three components: R13-INV-FC-R1312 & R13-INV-FC-R1331 & R13-INV-FC-R1341
R13-INV-FC-CCFSR_2_5_8	6.01E-08	1.03E-06	16.97	CCF of three components: R13-INV-FC-R1312 & R13-INV-FC-R1331 & R13-INV-FC-R1342
R13-INV-FC-CCFSR_2_6_7	6.01E-08	1.03E-06	16.97	CCF of three components: R13-INV-FC-R1312 & R13-INV-FC-R1332 & R13-INV-FC-R1341
R13-INV-FC-CCFSR_2_6_8	6.01E-08	1.03E-06	16.97	CCF of three components: R13-INV-FC-R1312 & R13-INV-FC-R1332 & R13-INV-FC-R1342
R13-INV-FC-CCFSR_3_5_7	6.01E-08	1.03E-06	16.97	CCF of three components: R13-INV-FC-R1321 & R13-INV-FC-R1331 & R13-INV-FC-R1341
R13-INV-FC-CCFSR_3_5_8	6.01E-08	1.03E-06	16.97	CCF of three components: R13-INV-FC-R1321 & R13-INV-FC-R1331 & R13-INV-FC-R1342
R13-INV-FC-CCFSR_3_6_7	6.01E-08	1.03E-06	16.97	CCF of three components: R13-INV-FC-R1321 & R13-INV-FC-R1332 & R13-INV-FC-R1341
R13-INV-FC-CCFSR_3_6_8	6.01E-08	1.03E-06	16.97	CCF of three components: R13-INV-FC-R1321 & R13-INV-FC-R1332 & R13-INV-FC-R1342
R13-INV-FC-CCFSR_4_5_7	6.01E-08	1.03E-06	16.97	CCF of three components: R13-INV-FC-R1322 & R13-INV-FC-R1331 & R13-INV-FC-R1341

Table 12.9-6

Importance Measure Report for Full-Power Core Damage Frequencies Due to Internal Fires

Event Name	Probability	Fus Ves	Ach W	Description
R13-INV-FC-CCFSR_4_5_8	6.01E-08	1.03E-06	16.97	CCF of three components: R13-INV-FC-R1322 & R13-INV-FC-R1331 & R13-INV-FC-R1342
R13-INV-FC-CCFSR_4_6_7	6.01E-08	1.03E-06	16.97	CCF of three components: R13-INV-FC-R1322 & R13-INV-FC-R1332 & R13-INV-FC-R1341
R13-INV-FC-CCFSR_4_6_8	6.01E-08	1.03E-06	16.97	CCF of three components: R13-INV-FC-R1322 & R13-INV-FC-R1332 & R13-INV-FC-R1342
R13-INV-FC-CCFSR_ALL	1.14E-05	1.15E-02	1010	CCF of all components in group 'R13-INV-FC-CCFSR'
R13-XFL-LP-CCFNSR2_1_2	5.05E-08	1.39E-06	27.93	CCF of two components: R13-XFL-LP-R13CBA & R13-XFL-LP-R13CBB
R13-XFL-LP-CCFNSR2_1_2_3	1.12E-09	8.00E-07	705.65	CCF of three components: R13-XFL-LP-R13CBA & R13-XFL-LP-R13CBB & R13-XFL-LP-R13C
R13-XFL-LP-CCFNSR2_1_3	5.05E-08	4.43E-06	88.12	CCF of two components: R13-XFL-LP-R13CBA & R13-XFL-LP-R13CBC
R13-XFL-LP-CCFNSR2_2_3	5.05E-08	4.09E-06	81.61	CCF of two components: R13-XFL-LP-R13CBB & R13-XFL-LP-R13CBC
R13-XFL-LP-CCFNSR2_6_7_8	1.12E-09	6.94E-07	618.56	CCF of three components: R13-XFL-LP-R13RBA & R13-XFL-LP-R13RBB & R13-XFL-LP-R13R
R13-XFL-LP-CCFNSR2_6_8	5.05E-08	3.91E-07	8.57	CCF of two components: R13-XFL-LP-R13RBA & R13-XFL-LP-R13RBC
R13-XFL-LP-CCFNSR2_7_8	5.05E-08	4.09E-06	81.61	CCF of two components: R13-XFL-LP-R13RBB & R13-XFL-LP-R13RBC
R13-XFL-LP-CCFNSR2_ALL	4.55E-07	1.38E-03	3040	CCF of all components in group 'R13-XFL-LP-CCFNSR2'

Table 12.9-6

Importance Measure Report for Full-Power Core Damage Frequencies Due to Internal Fires

Event Name	Probability	Fus Ves	Ach W	Description
R16-BDC-TM-R16A3	5.00E-04	5.18E-04	2.03	DC BUS R16-A3 IN MAINTENANCE
R16-BT_-LP-CCFNSR_1_3_5	1.51E-08	2.03E-06	133.69	CCF of three components: R16-BT_-LP-R16BTA1 & R16-BT_-LP-R16BTB1 & R16-BT_-LP-R1
R16-BT_-LP-CCFNSR_1_5	3.00E-07	3.43E-06	12.35	CCF of two components: R16-BT_-LP-R16BTA1 & R16-BT_-LP-R16BTC
R16-BT_-LP-CCFNSR_2_3_5	1.51E-08	1.19E-06	79.43	CCF of three components: R16-BT_-LP-R16BTA2 & R16-BT_-LP-R16BTB1 & R16-BT_-LP-R1
R16-BT_-LP-CCFNSR_3_4_5	1.51E-08	1.19E-06	79.43	CCF of three components: R16-BT_-LP-R16BTB1 & R16-BT_-LP-R16BTB2 & R16-BT_-LP-R1
R16-BT_-LP-CCFNSR_3_5	3.00E-07	2.67E-05	89.54	CCF of two components: R16-BT_-LP-R16BTB1 & R16-BT_-LP-R16BTC
R16-BT_-LP-CCFNSR_ALL	8.14E-07	2.46E-04	301.88	CCF of all components in group 'R16-BT_-LP-CCFNSR'
R16-BT_-LP-CCFSR_1_3_5	4.31E-09	8.89E-08	21.63	CCF of three components: R16-BT_-LP-R16BT11 & R16-BT_-LP-R16BT21 & R16-BT_-LP-R1
R16-BT_-LP-CCFSR_1_3_6	4.31E-09	8.89E-08	21.63	CCF of three components: R16-BT_-LP-R16BT11 & R16-BT_-LP-R16BT21 & R16-BT_-LP-R1
R16-BT_-LP-CCFSR_1_4_5	4.31E-09	8.89E-08	21.63	CCF of three components: R16-BT_-LP-R16BT11 & R16-BT_-LP-R16BT22 & R16-BT_-LP-R1
R16-BT_-LP-CCFSR_1_4_6	4.31E-09	8.89E-08	21.63	CCF of three components: R16-BT_-LP-R16BT11 & R16-BT_-LP-R16BT22 & R16-BT_-LP-R1

Table 12.9-6

Importance Measure Report for Full-Power Core Damage Frequencies Due to Internal Fires

Event Name	Probability	Fus Ves	Ach W	Description
R16-BT_-LP-CCFSR_2_3_5	4.31E-09	8.89E-08	21.63	CCF of three components: R16-BT_-LP-R16BT12 & R16-BT_-LP-R16BT21 & R16-BT_-LP-R1
R16-BT_-LP-CCFSR_2_3_6	4.31E-09	8.89E-08	21.63	CCF of three components: R16-BT_-LP-R16BT12 & R16-BT_-LP-R16BT21 & R16-BT_-LP-R1
R16-BT_-LP-CCFSR_2_4_5	4.31E-09	8.89E-08	21.63	CCF of three components: R16-BT_-LP-R16BT12 & R16-BT_-LP-R16BT22 & R16-BT_-LP-R1
R16-BT_-LP-CCFSR_2_4_6	4.31E-09	8.89E-08	21.63	CCF of three components: R16-BT_-LP-R16BT12 & R16-BT_-LP-R16BT22 & R16-BT_-LP-R1
R16-BT_-LP-CCFSR_ALL	8.14E-07	7.23E-04	886.34	CCF of all components in group 'R16-BT_-LP-CCFSR'
R16-BT_-TM-R16BTA3	5.00E-04	5.18E-04	2.03	BATTERY R16-BTA3 IN TEST AND MAINTENANCE
R21-DG_-FR-DGA	5.60E-02	1.15E-02	1.19	DIESEL GENERATOR "A" FAILS TO RUN GIVEN START
R21-DG_-FR-DGB	5.60E-02	1.13E-02	1.19	DIESEL GENERATOR "B" FAILS TO RUN GIVEN START
R21-DG_-TM-DGA	4.60E-02	8.80E-03	1.18	STANDBY DIESEL GENERATOR "A" IN MAINTENANCE
R21-DG_-TM-DGB	4.60E-02	8.57E-03	1.18	STANDBY DIESEL GENERATOR "B" IN MAINTENANCE
T10-VB_-CC_1_2_3	5.56E-07	1.90E-04	340.65	CCF of three components: T10-VB_-CC-VB1 & T10-VB_-CC-VB2 & T10-VB_-CC-VB3
T15-FLT-PP_ALL	5.68E-07	1.44E-06	3.5	CCF of all components in group 'T15-FLT-PP'

Table 12.9-6

Importance Measure Report for Full-Power Core Damage Frequencies Due to Internal Fires

Event Name	Probability	Fus Ves	Ach W	Description
U43-BV_CC_ALL	2.37E-06	4.18E-06	2.77	CCF of all components in group 'U43-BV_CC'
U43-UV_-CC2_ALL	1.69E-05	4.85E-05	3.84	CCF of all components in group 'U43-UV_-CC2'
XHOS72H	1.00E+00	3.56E-02	1	HOUSE EVENT: 72 HOURS (VALUE =1)
XXX-XHE-FO-DEPRESS	1.61E-01	1.91E-01	1.99	OPERATOR FAILS TO RECOGNIZE NEED OF DEPRESSURIZATION
XXX-XHE-FO-ICPCCS	1.61E-03	9.14E-03	6.63	Operator fails to recognize the need to makeup ICS/PCCS Pool level.
XXX-XHE-FO-LPMAKEUP	1.61E-01	1.50E-01	1.78	OP. FAILS TO RECOG. NEED FOR LOW PRESS. MAKEUP AFTER DEPRESSURIZATION

.

Table 12.9-7

Importance Measure Report for Shutdown Core Damage Frequencies Due to Internal Fire

Event Name	Probability	Fus Ves	Ach W	Description
B21-ACV-OC-F111A	2.40E-05	6.97E-04	29.81	AIR-TESTABLE CHECK VALVE F111A FAILS TO REMAIN OPEN
B21-ACV-OC-F111B	2.40E-05	1.46E-04	7.05	AIR-TESTABLE CHECK VALVE F111B FAILS TO REMAIN OPEN
B21-SQV-CC_1_2	2.38E-05	8.56E-05	4.56	CCF of two components: B21-SQV-CC-F004A & B21-SQV-CC-F004B
B21-SQV-CC_1_2_3	7.94E-07	2.96E-04	371.37	CCF of three components: B21-SQV-CC-F004A & B21-SQV-CC-F004B & B21-SQV-CC-F004C
B21-SQV-CC_1_2_4	7.94E-07	2.96E-04	371.37	CCF of three components: B21-SQV-CC-F004A & B21-SQV-CC-F004B & B21-SQV-CC-F004D
B21-SQV-CC_1_2_5	7.94E-07	2.96E-04	371.37	CCF of three components: B21-SQV-CC-F004A & B21-SQV-CC-F004B & B21-SQV-CC-F004E
B21-SQV-CC_1_2_6	7.94E-07	2.96E-04	371.37	CCF of three components: B21-SQV-CC-F004A & B21-SQV-CC-F004B & B21-SQV-CC-F004F
B21-SQV-CC_1_2_7	7.94E-07	8.36E-07	2	CCF of three components: B21-SQV-CC-F004A & B21-SQV-CC-F004B & B21-SQV-CC-F004G
B21-SQV-CC_1_2_8	7.94E-07	8.36E-07	2	CCF of three components: B21-SQV-CC-F004A & B21-SQV-CC-F004B & B21-SQV-CC-F004H
B21-SQV-CC_1_3	2.38E-05	8.56E-05	4.56	CCF of two components: B21-SQV-CC-F004A & B21-SQV-CC-F004C
B21-SQV-CC_1_3_4	7.94E-07	2.96E-04	371.37	CCF of three components: B21-SQV-CC-F004A & B21-SQV-CC-F004C & B21-SQV-CC-F004D
B21-SQV-CC_1_3_5	7.94E-07	2.96E-04	371.37	CCF of three components: B21-SQV-CC-F004A & B21-SQV-CC-F004C & B21-SQV-CC-F004E
B21-SQV-CC_1_3_6	7.94E-07	2.96E-04	371.37	CCF of three components: B21-SQV-CC-F004A & B21-SQV-CC-F004C & B21-SQV-CC-F004F
B21-SQV-CC_1_3_7	7.94E-07	8.36E-07	2	CCF of three components: B21-SQV-CC-F004A & B21-SQV-CC-F004C & B21-SQV-CC-F004G

Table 12.9-7

Importance Measure Report for Shutdown Core Damage Frequencies Due to Internal Fire

Event Name	Probability	Fus Ves	Ach W	Description
B21-SQV-CC_1_3_8	7.94E-07	8.36E-07	2	CCF of three components: B21-SQV-CC-F004A & B21-SQV-CC-F004C & B21-SQV-CC-F004H
B21-SQV-CC_1_4	2.38E-05	8.56E-05	4.56	CCF of two components: B21-SQV-CC-F004A & B21-SQV-CC-F004D
B21-SQV-CC_1_4_5	7.94E-07	2.96E-04	371.37	CCF of three components: B21-SQV-CC-F004A & B21-SQV-CC-F004D & B21-SQV-CC-F004E
B21-SQV-CC_1_4_6	7.94E-07	2.96E-04	371.37	CCF of three components: B21-SQV-CC-F004A & B21-SQV-CC-F004D & B21-SQV-CC-F004F
B21-SQV-CC_1_4_7	7.94E-07	8.36E-07	2	CCF of three components: B21-SQV-CC-F004A & B21-SQV-CC-F004D & B21-SQV-CC-F004G
B21-SQV-CC_1_4_8	7.94E-07	8.36E-07	2	CCF of three components: B21-SQV-CC-F004A & B21-SQV-CC-F004D & B21-SQV-CC-F004H
B21-SQV-CC_1_5	2.38E-05	8.56E-05	4.56	CCF of two components: B21-SQV-CC-F004A & B21-SQV-CC-F004E
B21-SQV-CC_1_5_6	7.94E-07	2.96E-04	371.37	CCF of three components: B21-SQV-CC-F004A & B21-SQV-CC-F004E & B21-SQV-CC-F004F
B21-SQV-CC_1_5_7	7.94E-07	8.36E-07	2	CCF of three components: B21-SQV-CC-F004A & B21-SQV-CC-F004E & B21-SQV-CC-F004G
B21-SQV-CC_1_5_8	7.94E-07	8.36E-07	2	CCF of three components: B21-SQV-CC-F004A & B21-SQV-CC-F004E & B21-SQV-CC-F004H
B21-SQV-CC_1_6	2.38E-05	8.56E-05	4.56	CCF of two components: B21-SQV-CC-F004A & B21-SQV-CC-F004F
B21-SQV-CC_1_6_7	7.94E-07	8.36E-07	2	CCF of three components: B21-SQV-CC-F004A & B21-SQV-CC-F004F & B21-SQV-CC-F004G
B21-SQV-CC_1_6_8	7.94E-07	8.36E-07	2	CCF of three components: B21-SQV-CC-F004A & B21-SQV-CC-F004F & B21-SQV-CC-F004H
B21-SQV-CC_2_3	2.38E-05	8.56E-05	4.56	CCF of two components: B21-SQV-CC-F004B & B21-SQV-CC-F004C
B21-SQV-CC_2_3_4	7.94E-07	2.96E-04	371.37	CCF of three components: B21-SQV-CC-F004B & B21-SQV-CC-F004C & B21-SQV-CC-F004D

Table 12.9-7

Importance Measure Report for Shutdown Core Damage Frequencies Due to Internal Fire

Event Name	Probability	Fus Ves	Ach W	Description
B21-SQV-CC_2_3_5	7.94E-07	2.96E-04	371.37	CCF of three components: B21-SQV-CC-F004B & B21-SQV-CC-F004C & B21-SQV-CC-F004E
B21-SQV-CC_2_3_6	7.94E-07	2.96E-04	371.37	CCF of three components: B21-SQV-CC-F004B & B21-SQV-CC-F004C & B21-SQV-CC-F004F
B21-SQV-CC_2_3_7	7.94E-07	8.36E-07	2	CCF of three components: B21-SQV-CC-F004B & B21-SQV-CC-F004C & B21-SQV-CC-F004G
B21-SQV-CC_2_3_8	7.94E-07	8.36E-07	2	CCF of three components: B21-SQV-CC-F004B & B21-SQV-CC-F004C & B21-SQV-CC-F004H
B21-SQV-CC_2_4	2.38E-05	8.56E-05	4.56	CCF of two components: B21-SQV-CC-F004B & B21-SQV-CC-F004D
B21-SQV-CC_2_4_5	7.94E-07	2.96E-04	371.37	CCF of three components: B21-SQV-CC-F004B & B21-SQV-CC-F004D & B21-SQV-CC-F004E
B21-SQV-CC_2_4_6	7.94E-07	2.96E-04	371.37	CCF of three components: B21-SQV-CC-F004B & B21-SQV-CC-F004D & B21-SQV-CC-F004F
B21-SQV-CC_2_4_7	7.94E-07	8.36E-07	2	CCF of three components: B21-SQV-CC-F004B & B21-SQV-CC-F004D & B21-SQV-CC-F004G
B21-SQV-CC_2_4_8	7.94E-07	8.36E-07	2	CCF of three components: B21-SQV-CC-F004B & B21-SQV-CC-F004D & B21-SQV-CC-F004H
B21-SQV-CC_2_5	2.38E-05	8.56E-05	4.56	CCF of two components: B21-SQV-CC-F004B & B21-SQV-CC-F004E
B21-SQV-CC_2_5_6	7.94E-07	2.96E-04	371.37	CCF of three components: B21-SQV-CC-F004B & B21-SQV-CC-F004E & B21-SQV-CC-F004F
B21-SQV-CC_2_5_7	7.94E-07	8.36E-07	2	CCF of three components: B21-SQV-CC-F004B & B21-SQV-CC-F004E & B21-SQV-CC-F004G
B21-SQV-CC_2_5_8	7.94E-07	8.36E-07	2	CCF of three components: B21-SQV-CC-F004B & B21-SQV-CC-F004E & B21-SQV-CC-F004H
B21-SQV-CC_2_6	2.38E-05	8.56E-05	4.56	CCF of two components: B21-SQV-CC-F004B & B21-SQV-CC-F004F
B21-SQV-CC_2_6_7	7.94E-07	8.36E-07	2	CCF of three components: B21-SQV-CC-F004B & B21-SQV-CC-F004F & B21-SQV-CC-F004G

Table 12.9-7

Importance Measure Report for Shutdown Core Damage Frequencies Due to Internal Fire

Event Name	Probability	Fus Ves	Ach W	Description
B21-SQV-CC_2_6_8	7.94E-07	8.36E-07	2	CCF of three components: B21-SQV-CC-F004B & B21-SQV-CC-F004F & B21-SQV-CC-F004H
B21-SQV-CC_3_4	2.38E-05	8.56E-05	4.56	CCF of two components: B21-SQV-CC-F004C & B21-SQV-CC-F004D
B21-SQV-CC_3_4_5	7.94E-07	2.96E-04	371.37	CCF of three components: B21-SQV-CC-F004C & B21-SQV-CC-F004D & B21-SQV-CC-F004E
B21-SQV-CC_3_4_6	7.94E-07	2.96E-04	371.37	CCF of three components: B21-SQV-CC-F004C & B21-SQV-CC-F004D & B21-SQV-CC-F004F
B21-SQV-CC_3_4_7	7.94E-07	8.36E-07	2	CCF of three components: B21-SQV-CC-F004C & B21-SQV-CC-F004D & B21-SQV-CC-F004G
B21-SQV-CC_3_4_8	7.94E-07	8.36E-07	2	CCF of three components: B21-SQV-CC-F004C & B21-SQV-CC-F004D & B21-SQV-CC-F004H
B21-SQV-CC_3_5	2.38E-05	8.56E-05	4.56	CCF of two components: B21-SQV-CC-F004C & B21-SQV-CC-F004E
B21-SQV-CC_3_5_6	7.94E-07	2.96E-04	371.37	CCF of three components: B21-SQV-CC-F004C & B21-SQV-CC-F004E & B21-SQV-CC-F004F
B21-SQV-CC_3_5_7	7.94E-07	8.36E-07	2	CCF of three components: B21-SQV-CC-F004C & B21-SQV-CC-F004E & B21-SQV-CC-F004G
B21-SQV-CC_3_5_8	7.94E-07	8.36E-07	2	CCF of three components: B21-SQV-CC-F004C & B21-SQV-CC-F004E & B21-SQV-CC-F004H
B21-SQV-CC_3_6	2.38E-05	8.56E-05	4.56	CCF of two components: B21-SQV-CC-F004C & B21-SQV-CC-F004F
B21-SQV-CC_3_6_7	7.94E-07	8.36E-07	2	CCF of three components: B21-SQV-CC-F004C & B21-SQV-CC-F004F & B21-SQV-CC-F004G
B21-SQV-CC_3_6_8	7.94E-07	8.36E-07	2	CCF of three components: B21-SQV-CC-F004C & B21-SQV-CC-F004F & B21-SQV-CC-F004H
B21-SQV-CC_4_5	2.38E-05	8.56E-05	4.56	CCF of two components: B21-SQV-CC-F004D & B21-SQV-CC-F004E
B21-SQV-CC_4_5_6	7.94E-07	2.96E-04	371.37	CCF of three components: B21-SQV-CC-F004D & B21-SQV-CC-F004E & B21-SQV-CC-F004F

Table 12.9-7

Importance Measure Report for Shutdown Core Damage Frequencies Due to Internal Fire

Event Name	Probability	Fus Ves	Ach W	Description
B21-SQV-CC_4_5_7	7.94E-07	8.36E-07	2	CCF of three components: B21-SQV-CC-F004D & B21-SQV-CC-F004E & B21-SQV-CC-F004G
B21-SQV-CC_4_5_8	7.94E-07	8.36E-07	2	CCF of three components: B21-SQV-CC-F004D & B21-SQV-CC-F004E & B21-SQV-CC-F004H
B21-SQV-CC_4_6	2.38E-05	8.56E-05	4.56	CCF of two components: B21-SQV-CC-F004D & B21-SQV-CC-F004F
B21-SQV-CC_4_6_7	7.94E-07	8.36E-07	2	CCF of three components: B21-SQV-CC-F004D & B21-SQV-CC-F004F & B21-SQV-CC-F004G
B21-SQV-CC_4_6_8	7.94E-07	8.36E-07	2	CCF of three components: B21-SQV-CC-F004D & B21-SQV-CC-F004F & B21-SQV-CC-F004H
B21-SQV-CC_5_6	2.38E-05	8.56E-05	4.56	CCF of two components: B21-SQV-CC-F004E & B21-SQV-CC-F004F
B21-SQV-CC_5_6_7	7.94E-07	8.36E-07	2	CCF of three components: B21-SQV-CC-F004E & B21-SQV-CC-F004F & B21-SQV-CC-F004G
B21-SQV-CC_5_6_8	7.94E-07	8.36E-07	2	CCF of three components: B21-SQV-CC-F004E & B21-SQV-CC-F004F & B21-SQV-CC-F004H
B21-SQV-CC_ALL	1.50E-04	8.15E-02	543.23	CCF of all components in group 'B21-SQV-CC'
B21-UV_-CC-F102_1_2	2.99E-06	8.64E-04	289.45	CCF of two components: B21-UV_-CC-F102A & B21-UV_-CC-F102B
B21-UV_-CC-F102A	1.00E-04	3.28E-03	33.67	CHECK VALVE F102A FAILS TO OPEN
B21-UV_-CC-F102B	1.00E-04	6.41E-04	7.4	CHECK VALVE F102B FAILS TO OPEN
B21-UV_-CC-F111_1_2	2.99E-06	8.64E-04	289.45	CCF of two components: B21-UV_-CC-F111A & B21-UV_-CC-F111B
B21-UV_-CC-F111A	1.00E-04	3.28E-03	33.67	CHECK VALVE F111A FAILS TO OPEN
B21-UV_-CC-F111B	1.00E-04	6.41E-04	7.4	CHECK VALVE F111B FAILS TO OPEN
B21-UV_-OC-F102A	4.80E-06	1.07E-04	22.93	CHECK VALVE F102A FAILS TO REMAIN OPEN
B21-UV_-OC-F102B	4.80E-06	2.61E-05	6.39	CHECK VALVE F102B FAILS TO REMAIN OPEN
B32-NONCONDENSE	1.00E+00	3.88E-02	1	Non condensable gasses form in ICS sufficiently to require venting

Table 12.9-7

Importance Measure Report for Shutdown Core Damage Frequencies Due to Internal Fire

Event Name	Probability	Fus Ves	Ach W	Description
B32-TM-LOOPA-IND	3.84E-02	4.08E-02	2.02	ICS LOOP A IN TEST OR MAINTENANCE BY ITSELF
B32-TM-LOOPB-IND	3.84E-02	4.08E-02	2.02	ICS LOOP B IN TEST OR MAINTENANCE BY ITSELF
B32-XHE-FO-VENT	1.76E-01	3.52E-02	1.16	Operator fails to open vent
C12-ACV-CO-F012	7.20E-07	3.11E-06	5.21	AIR OPERATED VALVE F012 FAILS TO REMAIN CLOSED
C12-ACV-CO-F030	7.20E-07	3.11E-06	5.21	AIR OPERATED VALVE F030 FAILS TO REMAIN CLOSED
C12-ACV-OO-F012	2.00E-03	1.28E-02	7.39	AIR OPERATED VALVE F012 FAILS TO CLOSE
C12-ACV-OO-F012-F030_1_2	1.93E-04	1.21E-03	7.28	CCF of two components: C12-ACV-OO-F012 & C12-ACV-OO-F030
C12-ACV-OO-F030	2.00E-03	1.28E-02	7.39	AIR OPERATED VALVE F030 FAILS TO CLOSE
C12-BV_-RE-F013A	4.84E-02	3.13E-02	1.61	MISPOSITION OF VALVE F013A
C12-BV_-RE-F013B	4.84E-02	3.13E-02	1.61	MISPOSITION OF VALVE F013B
C12-BV_-RE-F015A	4.84E-02	3.13E-02	1.61	MISPOSITION OF VALVE F015A
C12-BV_-RE-F015B	4.84E-02	3.13E-02	1.61	MISPOSITION OF VALVE F015B
C12-MOV-CC-F014_1_2	2.11E-04	1.33E-03	7.29	CCF of two components: C12-MOV-CC-F014A & C12-MOV-CC-F014B
C12-MOV-CC-F020_1_2	2.11E-04	1.33E-03	7.29	CCF of two components: C12-MOV-CC-F020A & C12-MOV-CC-F020B
C12-MOV-CC-F023	4.00E-03	2.57E-02	7.4	MOTOR OPERATED VALVE F023 FAILS TO OPEN
C12-MOV-CC-F070_1_2	2.11E-04	1.32E-03	7.26	CCF of two components: C12-MOV-CC-F070A & C12-MOV-CC-F070B
C12-MOV-CO-F024	1.20E-05	7.00E-05	6.8	MOTOR OPERATED VALVE F024 FAILS TO REMAIN CLOSED
C12-MOV-CO-F062A	1.20E-05	7.00E-05	6.8	MOTOR OPERATED VALVE F062A FAILS TO REMAIN CLOSE
C12-MOV-CO-F062B	1.20E-05	7.00E-05	6.8	MOTOR OPERATED VALVE F062B FAILS TO REMAIN CLOSED

Table 12.9-7

Importance Measure Report for Shutdown Core Damage Frequencies Due to Internal Fire

Event Name	Probability	Fus Ves	Ach W	Description
C12-MOV-OC-F014_1_2	2.80E-07	4.18E-07	2.41	CCF of two components: C12-MOV-OC-F014A & C12-MOV-OC-F014B
C12-MOV-OC-F020_1_2	2.80E-07	4.18E-07	2.41	CCF of two components: C12-MOV-OC-F020A & C12-MOV-OC-F020B
C12-MOV-OC-F023	3.36E-06	1.79E-05	6.29	MOTOR OPERATED VALVE F023 FAILS TO REMAIN OPEN
C12-MOV-OO-F024	4.00E-03	2.57E-02	7.4	MOTOR OPERATED VALVE F024 FAILS TO CLOSE
C12-MOV-OO-F062A	4.00E-03	2.57E-02	7.4	MOTOR OPERATED VALVE F062A FAILS TO CLOSE
C12-MOV-OO-F062B	4.00E-03	2.57E-02	7.4	MOTOR OPERATED VALVE F062B FAILS TO CLOSE
C12-MP_-FR-C001_1_2	3.96E-05	2.41E-04	7.06	CCF of two components: C12-MP_-FR-C001A & C12-MP_-FR-C001B
C12-MP_-FR-C001OIL_1_2	1.41E-05	8.40E-05	6.92	CCF of two components: C12-MP_-FR-C001AOIL & C12-MP_-FR-C001BOIL
C12-UV_-CC-F019_1_2	2.99E-06	1.55E-05	6.15	CCF of two components: C12-UV_-CC-F019A & C12-UV_-CC-F019B
C12-UV_-CC-F022	1.00E-04	6.22E-04	7.21	CHECK VALVE F022 FAILS TO OPEN
C12-UV_-OC-F019_1_2	2.53E-07	2.56E-07	2.01	CCF of two components: C12-UV_-OC-F019A & C12-UV_-OC-F019B
C12-UV_-OC-F022	4.80E-06	2.61E-05	6.39	CHECK VALVE F022 FAILS TO REMAIN OPEN
C12-XHE-FO-LEVEL2	3.21E-02	2.07E-01	7.24	Operator fails to back-up CRD actuation
C62-CCFSOFTWARE	1.00E-04	9.89E-04	10.86	N-DCIS COMMON CAUSE SOFTWARE FAILURE
C62-CCFSOFTWARE_S	1.00E-04	9.89E-04	10.86	N-DCIS SPURIOUS COMMON CAUSE SOFTWARE FAILURE
C62-DTM-FC-PIPMP_1_2	6.67E-05	6.48E-04	10.69	CCF of two components: C62-DTM-FC-PIPA & C62-DTM-FC-PIPB
C62-LDD-FC-LOADS	1.86E-06	1.15E-05	7.12	COMMON CAUSE FAILURE OF REMAINING NDCIS LOAD DRIVERS
C62-LOG-FC-PIPMP_ALL	1.80E-05	1.62E-04	9.92	CCF of all components in group 'C62-LOG-FC-PIPMP'
C62-PSP-FO-PIPEP_ALL	3.60E-07	9.76E-07	3.68	CCF of all components in group 'C62-PSP-FO-PIPEP'

Table 12.9-7

Importance Measure Report for Shutdown Core Damage Frequencies Due to Internal Fire

Event Name	Probability	Fus Ves	Ach W	Description
C62-PT_-NO-PIPRC_ALL	1.73E-06	1.04E-05	6.92	CCF of all components in group 'C62-PT_-NO-PIPRC'
C62-PT_-NO-PIPSW_ALL	1.73E-06	2.00E-06	2.11	CCF of all components in group 'C62-PT_-NO-PIPSW'
C62-TT_-NO-PIPRC_ALL	1.26E-06	6.92E-06	6.45	CCF of all components in group 'C62-TT_-NO-PIPRC'
C63-ATM-FC-IPR_1_2_3	1.85E-07	1.86E-07	2	CCF of three components: C63-ATM-FC-IPRD1 & C63-ATM-FC-IPRD2 & C63-ATM-FC-IPRD3
C63-ATM-FC-IPR_1_2_4	1.85E-07	1.86E-07	2	CCF of three components: C63-ATM-FC-IPRD1 & C63-ATM-FC-IPRD2 & C63-ATM-FC-IPRD4
C63-ATM-FC-IPR_1_3_4	1.85E-07	1.86E-07	2	CCF of three components: C63-ATM-FC-IPRD1 & C63-ATM-FC-IPRD3 & C63-ATM-FC-IPRD4
C63-ATM-FC-IPR_2_3_4	1.85E-07	1.86E-07	2	CCF of three components: C63-ATM-FC-IPRD2 & C63-ATM-FC-IPRD3 & C63-ATM-FC-IPRD4
C63-ATM-FC-IPR_ALL	5.00E-06	2.71E-05	6.39	CCF of all components in group 'C63-ATM-FC-IPR'
C63-CCFSOFTWARE	1.00E-04	2.30E-01	2300	Common cause failure of software
C63-CCFSOFTWARE_S	1.00E-04	1.51E-04	2.49	ESF SPURIOUS COMMON CAUSE SOFTWARE FAILURE
C63-DTM-FC-ESFLG_1_2	1.11E-05	1.54E-05	2.37	CCF of two components: C63-DTM-FC-ESFD1 & C63-DTM-FC-ESFD2
C63-DTM-FC-ESFLG_1_2_3	1.11E-06	2.02E-03	1810	CCF of three components: C63-DTM-FC-ESFD1 & C63-DTM-FC-ESFD2 & C63-DTM-FC-ESFD3
C63-DTM-FC-ESFLG_1_2_4	1.11E-06	2.02E-03	1810	CCF of three components: C63-DTM-FC-ESFD1 & C63-DTM-FC-ESFD2 & C63-DTM-FC-ESFD4
C63-DTM-FC-ESFLG_1_3	1.11E-05	1.54E-05	2.37	CCF of two components: C63-DTM-FC-ESFD1 & C63-DTM-FC-ESFD3
C63-DTM-FC-ESFLG_1_3_4	1.11E-06	2.02E-03	1810	CCF of three components: C63-DTM-FC-ESFD1 & C63-DTM-FC-ESFD3 & C63-DTM-FC-ESFD4
C63-DTM-FC-ESFLG_1_4	1.11E-05	1.54E-05	2.37	CCF of two components: C63-DTM-FC-ESFD1 & C63-DTM-FC-ESFD4
C63-DTM-FC-ESFLG_2_3	1.11E-05	1.54E-05	2.37	CCF of two components: C63-DTM-FC-ESFD2 & C63-DTM-FC-ESFD3

Table 12.9-7

Importance Measure Report for Shutdown Core Damage Frequencies Due to Internal Fire

Event Name	Probability	Fus Ves	Ach W	Description
C63-DTM-FC-ESFLG_2_3_4	1.11E-06	2.02E-03	1810	CCF of three components: C63-DTM-FC-ESFD2 & C63-DTM-FC-ESFD3 & C63-DTM-FC-ESFD4
C63-DTM-FC-ESFLG_2_4	1.11E-05	1.54E-05	2.37	CCF of two components: C63-DTM-FC-ESFD2 & C63-DTM-FC-ESFD4
C63-DTM-FC-ESFLG_3_4	1.11E-05	1.54E-05	2.37	CCF of two components: C63-DTM-FC-ESFD3 & C63-DTM-FC-ESFD4
C63-DTM-FC-ESFLG_ALL	3.00E-05	6.69E-02	2230	CCF of all components in group 'C63-DTM-FC-ESFLG'
C63-LDD-FC-ESFLOADS	1.86E-06	3.54E-03	1890	CCF OF ALL ESF LOAD DRIVERS
C63-LOG-FC-ESFLG_1_2	1.82E-06	1.36E-04	75.71	CCF of two components: C63-LOG-FC-ESFD1C1 & C63-LOG-FC-ESFD1C2
C63-LOG-FC-ESFLG_1_2_10	3.64E-08	2.16E-06	59.79	CCF of three components: C63-LOG-FC-ESFD1C1 & C63-LOG-FC-ESFD1C2 & C63-LOG-FC-ES
C63-LOG-FC-ESFLG_1_2_11	3.64E-08	2.16E-06	59.79	CCF of three components: C63-LOG-FC-ESFD1C1 & C63-LOG-FC-ESFD1C2 & C63-LOG-FC-ES
C63-LOG-FC-ESFLG_1_2_12	3.64E-08	2.16E-06	59.79	CCF of three components: C63-LOG-FC-ESFD1C1 & C63-LOG-FC-ESFD1C2 & C63-LOG-FC-ES
C63-LOG-FC-ESFLG_1_2_3	3.64E-08	2.16E-06	59.79	CCF of three components: C63-LOG-FC-ESFD1C1 & C63-LOG-FC-ESFD1C2 & C63-LOG-FC-ES
C63-LOG-FC-ESFLG_1_2_4	3.64E-08	2.16E-06	59.79	CCF of three components: C63-LOG-FC-ESFD1C1 & C63-LOG-FC-ESFD1C2 & C63-LOG-FC-ES
C63-LOG-FC-ESFLG_1_2_5	3.64E-08	2.16E-06	59.79	CCF of three components: C63-LOG-FC-ESFD1C1 & C63-LOG-FC-ESFD1C2 & C63-LOG-FC-ES
C63-LOG-FC-ESFLG_1_2_6	3.64E-08	2.16E-06	59.79	CCF of three components: C63-LOG-FC-ESFD1C1 & C63-LOG-FC-ESFD1C2 & C63-LOG-FC-ES
C63-LOG-FC-ESFLG_1_2_7	3.64E-08	2.16E-06	59.79	CCF of three components: C63-LOG-FC-ESFD1C1 & C63-LOG-FC-ESFD1C2 & C63-LOG-FC-ES
C63-LOG-FC-ESFLG_1_2_8	3.64E-08	2.16E-06	59.79	CCF of three components: C63-LOG-FC-ESFD1C1 & C63-LOG-FC-ESFD1C2 & C63-LOG-FC-ES
C63-LOG-FC-ESFLG_1_2_9	3.64E-08	2.16E-06	59.79	CCF of three components: C63-LOG-FC-ESFD1C1 & C63-LOG-FC-ESFD1C2 & C63-LOG-FC-ES

Table 12.9-7

Importance Measure Report for Shutdown Core Damage Frequencies Due to Internal Fire

Event Name	Probability	Fus Ves	Ach W	Description
C63-LOG-FC-ESFLG_1_3	1.82E-06	1.36E-04	75.71	CCF of two components: C63-LOG-FC-ESFD1C1 & C63-LOG-FC-ESFD1C3
C63-LOG-FC-ESFLG_1_3_10	3.64E-08	2.16E-06	59.79	CCF of three components: C63-LOG-FC-ESFD1C1 & C63-LOG-FC-ESFD1C3 & C63-LOG-FC-ES
C63-LOG-FC-ESFLG_1_3_11	3.64E-08	2.16E-06	59.79	CCF of three components: C63-LOG-FC-ESFD1C1 & C63-LOG-FC-ESFD1C3 & C63-LOG-FC-ES
C63-LOG-FC-ESFLG_1_3_12	3.64E-08	2.16E-06	59.79	CCF of three components: C63-LOG-FC-ESFD1C1 & C63-LOG-FC-ESFD1C3 & C63-LOG-FC-ES
C63-LOG-FC-ESFLG_1_3_4	3.64E-08	2.16E-06	59.79	CCF of three components: C63-LOG-FC-ESFD1C1 & C63-LOG-FC-ESFD1C3 & C63-LOG-FC-ES
C63-LOG-FC-ESFLG_1_3_5	3.64E-08	2.16E-06	59.79	CCF of three components: C63-LOG-FC-ESFD1C1 & C63-LOG-FC-ESFD1C3 & C63-LOG-FC-ES
C63-LOG-FC-ESFLG_1_3_6	3.64E-08	2.16E-06	59.79	CCF of three components: C63-LOG-FC-ESFD1C1 & C63-LOG-FC-ESFD1C3 & C63-LOG-FC-ES
C63-LOG-FC-ESFLG_1_3_7	3.64E-08	2.16E-06	59.79	CCF of three components: C63-LOG-FC-ESFD1C1 & C63-LOG-FC-ESFD1C3 & C63-LOG-FC-ES
C63-LOG-FC-ESFLG_1_3_8	3.64E-08	2.16E-06	59.79	CCF of three components: C63-LOG-FC-ESFD1C1 & C63-LOG-FC-ESFD1C3 & C63-LOG-FC-ES
C63-LOG-FC-ESFLG_1_3_9	3.64E-08	2.16E-06	59.79	CCF of three components: C63-LOG-FC-ESFD1C1 & C63-LOG-FC-ESFD1C3 & C63-LOG-FC-ES
C63-LOG-FC-ESFLG_2_3	1.82E-06	1.36E-04	75.71	CCF of two components: C63-LOG-FC-ESFD1C2 & C63-LOG-FC-ESFD1C3
C63-LOG-FC-ESFLG_2_3_10	3.64E-08	2.16E-06	59.79	CCF of three components: C63-LOG-FC-ESFD1C2 & C63-LOG-FC-ESFD1C3 & C63-LOG-FC-ES
C63-LOG-FC-ESFLG_2_3_11	3.64E-08	2.16E-06	59.79	CCF of three components: C63-LOG-FC-ESFD1C2 & C63-LOG-FC-ESFD1C3 & C63-LOG-FC-ES
C63-LOG-FC-ESFLG_2_3_12	3.64E-08	2.16E-06	59.79	CCF of three components: C63-LOG-FC-ESFD1C2 & C63-LOG-FC-ESFD1C3 & C63-LOG-FC-ES
C63-LOG-FC-ESFLG_2_3_4	3.64E-08	2.16E-06	59.79	CCF of three components: C63-LOG-FC-ESFD1C2 & C63-LOG-FC-ESFD1C3 & C63-LOG-FC-ES

Table 12.9-7

Importance Measure Report for Shutdown Core Damage Frequencies Due to Internal Fire

Event Name	Probability	Fus Ves	Ach W	Description
C63-LOG-FC-ESFLG_2_3_5	3.64E-08	2.16E-06	59.79	CCF of three components: C63-LOG-FC-ESFD1C2 & C63-LOG-FC-ESFD1C3 & C63-LOG-FC-ES
C63-LOG-FC-ESFLG_2_3_6	3.64E-08	2.16E-06	59.79	CCF of three components: C63-LOG-FC-ESFD1C2 & C63-LOG-FC-ESFD1C3 & C63-LOG-FC-ES
C63-LOG-FC-ESFLG_2_3_7	3.64E-08	2.16E-06	59.79	CCF of three components: C63-LOG-FC-ESFD1C2 & C63-LOG-FC-ESFD1C3 & C63-LOG-FC-ES
C63-LOG-FC-ESFLG_2_3_8	3.64E-08	2.16E-06	59.79	CCF of three components: C63-LOG-FC-ESFD1C2 & C63-LOG-FC-ESFD1C3 & C63-LOG-FC-ES
C63-LOG-FC-ESFLG_2_3_9	3.64E-08	2.16E-06	59.79	CCF of three components: C63-LOG-FC-ESFD1C2 & C63-LOG-FC-ESFD1C3 & C63-LOG-FC-ES
C63-LOG-FC-ESFLG_ALL	1.80E-05	3.93E-02	2180	CCF of all components in group 'C63-LOG-FC-ESFLG'
C63-LOG-FC-IPRLG_ALL	1.80E-05	1.08E-04	6.96	CCF of all components in group 'C63-LOG-FC-IPRLG'
C63-LT_-NO-ESFRX_1_2_3	1.91E-08	2.22E-05	1160	CCF of three components: C63-LT_-NO-ESFRXLVLA & C63-LT_-NO-ESFRXLVLB & C63-LT_-N
C63-LT_-NO-ESFRX_1_2_4	1.91E-08	2.22E-05	1160	CCF of three components: C63-LT_-NO-ESFRXLVLA & C63-LT_-NO-ESFRXLVLB & C63-LT_-N
C63-LT_-NO-ESFRX_1_3_4	1.91E-08	2.22E-05	1160	CCF of three components: C63-LT_-NO-ESFRXLVLA & C63-LT_-NO-ESFRXLVLC & C63-LT_-N
C63-LT_-NO-ESFRX_2_3_4	1.91E-08	2.22E-05	1160	CCF of three components: C63-LT_-NO-ESFRXLVLB & C63-LT_-NO-ESFRXLVLC & C63-LT_-N
C63-LT_-NO-ESFRX_ALL	3.60E-06	6.75E-03	1870	CCF of all components in group 'C63-LT_-NO-ESFRX'
C63-LT_-NO-IPRRX_1_2_3	1.33E-07	1.39E-07	2.05	CCF of three components: C63-LT_-NO-IPRRXLVLA & C63-LT_-NO-IPRRXLVLB & C63-LT_-N
C63-LT_-NO-IPRRX_1_2_4	1.33E-07	1.39E-07	2.05	CCF of three components: C63-LT_-NO-IPRRXLVLA & C63-LT_-NO-IPRRXLVLB & C63-LT_-N
C63-LT_-NO-IPRRX_1_3_4	1.33E-07	1.39E-07	2.05	CCF of three components: C63-LT_-NO-IPRRXLVLA & C63-LT_-NO-IPRRXLVLC & C63-LT_-N
C63-LT_-NO-IPRRX_2_3_4	1.33E-07	1.39E-07	2.05	CCF of three components: C63-LT_-NO-IPRRXLVLB & C63-LT_-NO-IPRRXLVLC & C63-LT_-N
C63-LT_-NO-IPRRX_ALL	3.60E-06	1.92E-05	6.31	CCF of all components in group 'C63-LT_-NO-IPRRX'

Table 12.9-7

Importance Measure Report for Shutdown Core Damage Frequencies Due to Internal Fire

Event Name	Probability	Fus Ves	Ach W	Description
C63-PSP-FO-ESFEP_9_10	2.67E-08	1.49E-06	56.32	CCF of two components: C63-PSP-FO-ESFD1PSA & C63-PSP-FO-ESFD1PSB
C63-PSP-FO-ESFEP_ALL	3.60E-07	2.38E-04	657.58	CCF of all components in group 'C63-PSP-FO-ESFEP'
C63-PSP-FO-IPREP_ALL	3.60E-07	8.60E-07	3.39	CCF of all components in group 'C63-PSP-FO-IPREP'
E50-BV_-OC-F004A	2.63E-04	1.02E-01	387.78	MAINTENANCE VALVE F004A PLUGS/TRANSFERS CLOSED
E50-BV_-OC-F004D	2.63E-04	1.02E-01	387.78	MAINTENANCE VALVE F004D PLUGS/TRANSFERS CLOSED
E50-POL-RP-POOLA	7.20E-06	2.01E-03	277.71	GDCS POOLS A LEAKS CATASTROPHICALLY
E50-POL-RP-POOLD	7.20E-06	2.01E-03	277.71	GDCS POOL D LEAKS CATASTROPHICALLY
E50-SQV-CC-EQU_ALL	3.00E-04	1.17E-01	390.07	CCF of all components in group 'E50-SQV-CC-EQU'
E50-SQV-CC-INJ_1_2_5	7.94E-07	1.54E-04	192.89	CCF of three components: E50-SQV-CC-INJ-F002A & E50-SQV-CC-INJ-F002B & E50-SQV-C
E50-SQV-CC-INJ_1_3_5	7.94E-07	1.54E-04	192.89	CCF of three components: E50-SQV-CC-INJ-F002A & E50-SQV-CC-INJ-F002C & E50-SQV-C
E50-SQV-CC-INJ_1_4_5	7.94E-07	1.54E-04	192.89	CCF of three components: E50-SQV-CC-INJ-F002A & E50-SQV-CC-INJ-F002D & E50-SQV-C
E50-SQV-CC-INJ_1_4_8	7.94E-07	1.54E-04	192.89	CCF of three components: E50-SQV-CC-INJ-F002A & E50-SQV-CC-INJ-F002D & E50-SQV-C
E50-SQV-CC-INJ_1_5	2.38E-05	7.70E-03	322.47	CCF of two components: E50-SQV-CC-INJ-F002A & E50-SQV-CC-INJ-F002E
E50-SQV-CC-INJ_1_5_6	7.94E-07	1.54E-04	192.89	CCF of three components: E50-SQV-CC-INJ-F002A & E50-SQV-CC-INJ-F002E & E50-SQV-C
E50-SQV-CC-INJ_1_5_7	7.94E-07	1.54E-04	192.89	CCF of three components: E50-SQV-CC-INJ-F002A & E50-SQV-CC-INJ-F002E & E50-SQV-C
E50-SQV-CC-INJ_1_5_8	7.94E-07	1.54E-04	192.89	CCF of three components: E50-SQV-CC-INJ-F002A & E50-SQV-CC-INJ-F002E & E50-SQV-C
E50-SQV-CC-INJ_2_4_8	7.94E-07	1.54E-04	192.89	CCF of three components: E50-SQV-CC-INJ-F002B & E50-SQV-CC-INJ-F002D & E50-SQV-C

Table 12.9-7

Importance Measure Report for Shutdown Core Damage Frequencies Due to Internal Fire

Event Name	Probability	Fus Ves	Ach W	Description
E50-SQV-CC-INJ_3_4_8	7.94E-07	1.54E-04	192.89	CCF of three components: E50-SQV-CC-INJ-F002C & E50-SQV-CC-INJ-F002D & E50-SQV-C
E50-SQV-CC-INJ_4_5_8	7.94E-07	1.54E-04	192.89	CCF of three components: E50-SQV-CC-INJ-F002D & E50-SQV-CC-INJ-F002E & E50-SQV-C
E50-SQV-CC-INJ_4_6_8	7.94E-07	1.54E-04	192.89	CCF of three components: E50-SQV-CC-INJ-F002D & E50-SQV-CC-INJ-F002F & E50-SQV-C
E50-SQV-CC-INJ_4_7_8	7.94E-07	1.54E-04	192.89	CCF of three components: E50-SQV-CC-INJ-F002D & E50-SQV-CC-INJ-F002G & E50-SQV-C
E50-SQV-CC-INJ_4_8	2.38E-05	7.70E-03	322.47	CCF of two components: E50-SQV-CC-INJ-F002D & E50-SQV-CC-INJ-F002H
E50-SQV-CC-INJ_ALL	1.50E-04	5.66E-02	376.52	CCF of all components in group 'E50-SQV-CC-INJ'
E50-SQV-CC-INJ-F002A	3.00E-03	3.62E-03	2.19	SQUIB VALVE F002A FAILS TO OPERATE
E50-SQV-CC-INJ-F002D	3.00E-03	3.62E-03	2.19	SQUIB VALVE F002D FAILS TO OPERATE
E50-SQV-CC-INJ-F002E	3.00E-03	3.62E-03	2.19	SQUIB VALVE F002E FAILS TO OPERATE
E50-SQV-CC-INJ-F002H	3.00E-03	3.62E-03	2.19	SQUIB VALVE F002H FAILS TO OPERATE
E50-SQV-CO-F009A	9.60E-06	2.77E-03	287.51	SQUIB DELUGE VALVE F009A SPUR. OPENING [#7]
E50-SQV-CO-F009D	9.60E-06	2.77E-03	287.51	SQUIB DELUGE VALVE F009D SPUR. OPENING [#7]
E50-SQV-CO-F009E	9.60E-06	2.77E-03	287.51	SQUIB DELUGE VALVE F009E SPUR. OPENING [#7]
E50-SQV-CO-F009H	9.60E-06	2.77E-03	287.51	SQUIB DELUGE VALVE F009H SPUR. OPENING [#7]
E50-SQV-CO-F009J	9.60E-06	2.77E-03	287.51	SQUIB DELUGE VALVE F009J SPUR. OPENING [#7]
E50-SQV-CO-F009M	9.60E-06	2.77E-03	287.51	SQUIB DELUGE VALVE F009M SPUR. OPENING [#7]
E50-STR-PG_ALL	1.20E-05	3.56E-03	295.75	CCF of all components in group 'E50-STR-PG'
E50-UV_-CC-EQU_ALL	1.72E-06	3.85E-04	223.64	CCF of all components in group 'E50-UV_-CC-EQU'
E50-UV_-CC-INJ_1_2_5	4.03E-07	6.73E-05	167.02	CCF of three components: E50-UV_-CC-INJ-F003A & E50-UV_-CC-INJ-F003B & E50-UV_-C
E50-UV_-CC-INJ_1_3_5	4.03E-07	6.73E-05	167.02	CCF of three components: E50-UV_-CC-INJ-F003A & E50-UV_-CC-INJ-F003C & E50-UV_-C
E50-UV_-CC-INJ_1_4_5	4.03E-07	6.73E-05	167.02	CCF of three components: E50-UV_-CC-INJ-F003A & E50-UV_-CC-INJ-F003D & E50-UV_-C

Table 12.9-7

Importance Measure Report for Shutdown Core Damage Frequencies Due to Internal Fire

Event Name	Probability	Fus Ves	Ach W	Description
E50-UV_-CC-INJ_1_4_8	4.03E-07	6.73E-05	167.02	CCF of three components: E50-UV_-CC-INJ-F003A & E50-UV_-CC-INJ-F003D & E50-UV_-C
E50-UV_-CC-INJ_1_5	1.52E-07	2.25E-05	148.02	CCF of two components: E50-UV_-CC-INJ-F003A & E50-UV_-CC-INJ-F003E
E50-UV_-CC-INJ_1_5_6	4.03E-07	6.73E-05	167.02	CCF of three components: E50-UV_-CC-INJ-F003A & E50-UV_-CC-INJ-F003E & E50-UV_-C
E50-UV_-CC-INJ_1_5_7	4.03E-07	6.73E-05	167.02	CCF of three components: E50-UV_-CC-INJ-F003A & E50-UV_-CC-INJ-F003E & E50-UV_-C
E50-UV_-CC-INJ_1_5_8	4.03E-07	6.73E-05	167.02	CCF of three components: E50-UV_-CC-INJ-F003A & E50-UV_-CC-INJ-F003E & E50-UV_-C
E50-UV_-CC-INJ_2_4_8	4.03E-07	6.73E-05	167.02	CCF of three components: E50-UV_-CC-INJ-F003B & E50-UV_-CC-INJ-F003D & E50-UV_-C
E50-UV_-CC-INJ_3_4_8	4.03E-07	6.73E-05	167.02	CCF of three components: E50-UV_-CC-INJ-F003C & E50-UV_-CC-INJ-F003D & E50-UV_-C
E50-UV_-CC-INJ_4_5_8	4.03E-07	6.73E-05	167.02	CCF of three components: E50-UV_-CC-INJ-F003D & E50-UV_-CC-INJ-F003E & E50-UV_-C
E50-UV_-CC-INJ_4_6_8	4.03E-07	6.73E-05	167.02	CCF of three components: E50-UV_-CC-INJ-F003D & E50-UV_-CC-INJ-F003F & E50-UV_-C
E50-UV_-CC-INJ_4_7_8	4.03E-07	6.73E-05	167.02	CCF of three components: E50-UV_-CC-INJ-F003D & E50-UV_-CC-INJ-F003G & E50-UV_-C
E50-UV_-CC-INJ_4_8	1.52E-07	2.25E-05	148.02	CCF of two components: E50-UV_-CC-INJ-F003D & E50-UV_-CC-INJ-F003H
E50-UV_-CC-INJ_ALL	1.72E-05	5.35E-03	310.66	CCF of all components in group 'E50-UV_-CC-INJ'
E50-UV_-CC-INJ-F003A	1.00E-03	1.02E-03	2.01	INJECTION CHECK VALVE F003A FAILS TO OPEN
E50-UV_-CC-INJ-F003D	1.00E-03	1.02E-03	2.01	INJECTION CHECK VALVE F003D FAILS TO OPEN
E50-UV_-CC-INJ-F003E	1.00E-03	1.02E-03	2.01	INJECTION CHECK VALVE F003E FAILS TO OPEN
E50-UV_-CC-INJ-F003H	1.00E-03	1.02E-03	2.01	INJECTION CHECK VALVE F003H FAILS TO OPEN
G21-BV_-CC-F346	1.00E-04	3.26E-04	4.21	MANUAL VALVE FAILS TO OPEN
G21-BV_-OC-F334	7.20E-07	5.02E-06	7.82	MANUAL VALVE F334 PLUGS-TRANSFERS CLOSED

Table 12.9-7

Importance Measure Report for Shutdown Core Damage Frequencies Due to Internal Fire

Event Name	Probability	Fus Ves	Ach W	Description
G21-MOV-CC-2_1_2	4.44E-04	9.68E-03	22.68	CCF of two components: G21-MOV-CC-F332A & G21-MOV-CC-F332B
G21-MP_-FR-PLP	6.00E-04	3.03E-03	6	MOTOR-DRIVEN LPI PUMP FAILS TO RUN
G21-MP_-FS-PLP	2.00E-03	1.23E-02	7.07	MOTOR-DRIVEN LPI PUMP FAILS TO START
G21-UV_-CC-A_1_2	2.99E-06	3.53E-05	12.66	CCF of two components: G21-UV_-CC-F333A & G21-UV_-CC-F333B
G21-UV_-CC-F347	1.00E-04	3.26E-04	4.21	CHECK VALVE F347 FAILS TO OPEN
G21-UV_-CC-FU438	1.00E-04	3.26E-04	4.21	LPI DISCHARGE CHECK VALVE FAILS TO OPEN
G21-UV_-OO-F331A	1.00E-03	5.55E-03	6.49	CHECK VALVE F331A FAILS TO CLOSE
G21-UV_-OO-F331B	1.00E-03	5.55E-03	6.49	CHECK VALVE F331B FAILS TO CLOSE
G31-UV_-OO_1_2	5.26E-05	3.23E-04	7.12	CCF of two components: G31-UV_-OO-F023A & G31-UV_-OO-F024A
MS-TOP2	5.00E-02	3.59E-01	7.81	TWO DPVs FAIL TO OPEN (MANUAL)
P21-ACV-CC-F0023_1_2	1.93E-04	9.04E-04	5.66	CCF of two components: P21-ACV-CC-F0023A & P21-ACV-CC-F0023B
P21-ACV-CC-F0023A	2.00E-03	2.11E-03	2.04	AIR OPERATED VALVE F0023A FAILS TO OPEN
P21-ACV-OO-CCF23_1_2	2.22E-04	1.05E-03	5.71	CCF of two components: P21-ACV-OO-F023A & P21-ACV-OO-F023B
P21-ACV-OO-F0004	2.00E-03	1.04E-02	6.17	AIR OPERATED VALVE F0004 FAILS TO CLOSE
P21-ACV-OO-F0016_1_2	1.93E-04	2.43E-03	13.57	CCF of two components: P21-ACV-OO-F016A & P21-ACV-OO-F016B
P21-ACV-OO-F0027	2.00E-03	1.04E-02	6.17	AIR OPERATED VALVE F0027 FAILS TO CLOSE
P21-ACV-OO-F0061	2.00E-03	1.04E-02	6.17	AIR OPERATED VALVE F0061 FAILS TO CLOSE
P21-ACV-OO-F016A	2.00E-03	2.14E-03	2.05	AIR OPERATED VALVE F016A FAILS TO CLOSE
P21-ACV-OO-F023A	2.00E-03	2.11E-03	2.04	AIR OPERATED VALVE FAILS TO CLOSE
P21-ACV-OO-XTIE_1_2	5.92E-06	1.29E-05	3.15	CCF of two components: P21-ACV-OO-F0004 & P21-ACV-OO-F0027
P21-ACV-OO-XTIE_1_2_3	1.57E-04	7.25E-04	5.57	CCF of three components: P21-ACV-OO-F0004 & P21-ACV-OO-F0027 & P21-ACV-OO-F0061

Table 12.9-7

Importance Measure Report for Shutdown Core Damage Frequencies Due to Internal Fire

Event Name	Probability	Fus Ves	Ach W	Description
P21-ACV-OO-XTIE_1_3	5.92E-06	1.29E-05	3.15	CCF of two components: P21-ACV-OO-F0004 & P21-ACV-OO-F0061
P21-ACV-OO-XTIE_2_3	5.92E-06	1.29E-05	3.15	CCF of two components: P21-ACV-OO-F0027 & P21-ACV-OO-F0061
P21-AHU-FR_1_2	1.26E-05	1.25E-04	10.8	CCF of two components: P21-AHU-FR-RCCWA & P21-AHU-FR-RCCWB
P21-AHU-FS_1_2	6.67E-04	3.37E-03	6.04	CCF of two components: P21-AHU-FS-RCCWA & P21-AHU-FS-RCCWB
P21-AHU-FS-RCCWA	6.00E-03	7.60E-03	2.25	AIR HANDLING UNIT RCCWS ROOM A FAILS TO START
P21-AHU-FS-RCCWB	6.00E-03	6.92E-03	2.14	AIR HANDLING UNIT RCCWS ROOM B FAILS TO START
P21-MOV-CC_1_2_4	4.17E-06	8.74E-06	3.06	CCF of three components: P21-MOV-CC-F0010A1 & P21-MOV-CC-F0010A2 & P21-MOV-CC-F0
P21-MOV-CC_1_2_5	4.17E-06	8.74E-06	3.06	CCF of three components: P21-MOV-CC-F0010A1 & P21-MOV-CC-F0010A2 & P21-MOV-CC-F0
P21-MOV-CC_1_2_6	4.17E-06	8.74E-06	3.06	CCF of three components: P21-MOV-CC-F0010A1 & P21-MOV-CC-F0010A2 & P21-MOV-CC-F0
P21-MOV-CC_1_3_4	4.17E-06	8.74E-06	3.06	CCF of three components: P21-MOV-CC-F0010A1 & P21-MOV-CC-F0010A3 & P21-MOV-CC-F0
P21-MOV-CC_1_3_5	4.17E-06	8.74E-06	3.06	CCF of three components: P21-MOV-CC-F0010A1 & P21-MOV-CC-F0010A3 & P21-MOV-CC-F0
P21-MOV-CC_1_3_6	4.17E-06	8.74E-06	3.06	CCF of three components: P21-MOV-CC-F0010A1 & P21-MOV-CC-F0010A3 & P21-MOV-CC-F0
P21-MOV-CC_1_4	4.21E-06	8.92E-06	3.06	CCF of two components: P21-MOV-CC-F0010A1 & P21-MOV-CC-F0010B1
P21-MOV-CC_1_4_5	4.17E-06	8.74E-06	3.06	CCF of three components: P21-MOV-CC-F0010A1 & P21-MOV-CC-F0010B1 & P21-MOV-CC-F0
P21-MOV-CC_1_4_6	4.17E-06	8.74E-06	3.06	CCF of three components: P21-MOV-CC-F0010A1 & P21-MOV-CC-F0010B1 & P21-MOV-CC-F0

Table 12.9-7

Importance Measure Report for Shutdown Core Damage Frequencies Due to Internal Fire

Event Name	Probability	Fus Ves	Ach W	Description
P21-MOV-CC_1_5	4.21E-06	8.92E-06	3.06	CCF of two components: P21-MOV-CC-F0010A1 & P21-MOV-CC-F0010B2
P21-MOV-CC_1_5_6	4.17E-06	8.74E-06	3.06	CCF of three components: P21-MOV-CC-F0010A1 & P21-MOV-CC-F0010B2 & P21-MOV-CC-F0
P21-MOV-CC_1_6	4.21E-06	8.92E-06	3.06	CCF of two components: P21-MOV-CC-F0010A1 & P21-MOV-CC-F0010B3
P21-MOV-CC_2_3_4	4.17E-06	8.74E-06	3.06	CCF of three components: P21-MOV-CC-F0010A2 & P21-MOV-CC-F0010A3 & P21-MOV-CC-F0
P21-MOV-CC_2_3_5	4.17E-06	8.74E-06	3.06	CCF of three components: P21-MOV-CC-F0010A2 & P21-MOV-CC-F0010A3 & P21-MOV-CC-F0
P21-MOV-CC_2_3_6	4.17E-06	8.74E-06	3.06	CCF of three components: P21-MOV-CC-F0010A2 & P21-MOV-CC-F0010A3 & P21-MOV-CC-F0
P21-MOV-CC_2_4	4.21E-06	8.92E-06	3.06	CCF of two components: P21-MOV-CC-F0010A2 & P21-MOV-CC-F0010B1
P21-MOV-CC_2_4_5	4.17E-06	8.74E-06	3.06	CCF of three components: P21-MOV-CC-F0010A2 & P21-MOV-CC-F0010B1 & P21-MOV-CC-F0
P21-MOV-CC_2_4_6	4.17E-06	8.74E-06	3.06	CCF of three components: P21-MOV-CC-F0010A2 & P21-MOV-CC-F0010B1 & P21-MOV-CC-F0
P21-MOV-CC_2_5	4.21E-06	8.92E-06	3.06	CCF of two components: P21-MOV-CC-F0010A2 & P21-MOV-CC-F0010B2
P21-MOV-CC_2_5_6	4.17E-06	8.74E-06	3.06	CCF of three components: P21-MOV-CC-F0010A2 & P21-MOV-CC-F0010B2 & P21-MOV-CC-F0
P21-MOV-CC_2_6	4.21E-06	8.92E-06	3.06	CCF of two components: P21-MOV-CC-F0010A2 & P21-MOV-CC-F0010B3
P21-MOV-CC_3_4	4.21E-06	8.92E-06	3.06	CCF of two components: P21-MOV-CC-F0010A3 & P21-MOV-CC-F0010B1
P21-MOV-CC_3_4_5	4.17E-06	8.74E-06	3.06	CCF of three components: P21-MOV-CC-F0010A3 & P21-MOV-CC-F0010B1 & P21-MOV-CC-F0
P21-MOV-CC_3_4_6	4.17E-06	8.74E-06	3.06	CCF of three components: P21-MOV-CC-F0010A3 & P21-MOV-CC-F0010B1 & P21-MOV-CC-F0

Table 12.9-7

Importance Measure Report for Shutdown Core Damage Frequencies Due to Internal Fire

Event Name	Probability	Fus Ves	Ach W	Description
P21-MOV-CC_3_5	4.21E-06	8.92E-06	3.06	CCF of two components: P21-MOV-CC-F0010A3 & P21-MOV-CC-F0010B2
P21-MOV-CC_3_5_6	4.17E-06	8.74E-06	3.06	CCF of three components: P21-MOV-CC-F0010A3 & P21-MOV-CC-F0010B2 & P21-MOV-CC-F0
P21-MOV-CC_3_6	4.21E-06	8.92E-06	3.06	CCF of two components: P21-MOV-CC-F0010A3 & P21-MOV-CC-F0010B3
P21-MOV-CC_ALL	1.48E-04	6.78E-04	5.55	CCF of all components in group 'P21-MOV-CC'
P21-MOV-CC-F0010A1	4.00E-03	4.76E-03	2.17	MOTOR OPERATED VALVE F0010A1 FAILS TO OPEN
P21-MOV-CC-F0010A2	4.00E-03	4.76E-03	2.17	MOTOR OPERATED VALVE F0010A2 FAILS TO OPEN
P21-MOV-CC-F0010A3	4.00E-03	4.76E-03	2.17	MOTOR OPERATED VALVE F0010A3 FAILS TO OPEN
P21-MOV-CC-F0010B1	4.00E-03	4.32E-03	2.06	MOTOR OPERATED VALVE F0010B1 FAILS TO OPEN
P21-MOV-CC-F0010B2	4.00E-03	4.32E-03	2.06	MOTOR OPERATED VALVE F0010B2 FAILS TO OPEN
P21-MOV-CC-F0010B3	4.00E-03	4.32E-03	2.06	MOTOR OPERATED VALVE F0010B3 FAILS TO OPEN
P21-MP_-FR_ALL	1.33E-05	1.32E-04	10.86	CCF of all components in group 'P21-MP_-FR'
P21-MP_-FS_1_2_3	1.54E-06	2.21E-06	2.41	CCF of three components: P21-MPC-FS-C001A & P21-MPC-FS-C001B & P21-MPC-FS-C002A
P21-MP_-FS_1_2_4	1.54E-06	2.21E-06	2.41	CCF of three components: P21-MPC-FS-C001A & P21-MPC-FS-C001B & P21-MPC-FS-C002B
P21-MP_-FS_1_2_5	1.54E-06	2.21E-06	2.41	CCF of three components: P21-MPC-FS-C001A & P21-MPC-FS-C001B & P21-MPC-FS-C003A
P21-MP_-FS_1_2_6	1.54E-06	2.21E-06	2.41	CCF of three components: P21-MPC-FS-C001A & P21-MPC-FS-C001B & P21-MPC-FS-C003B
P21-MP_-FS_1_3_4	1.54E-06	2.21E-06	2.41	CCF of three components: P21-MPC-FS-C001A & P21-MPC-FS-C002A & P21-MPC-FS-C002B

Table 12.9-7

Importance Measure Report for Shutdown Core Damage Frequencies Due to Internal Fire

Event Name	Probability	Fus Ves	Ach W	Description
P21-MP_-FS_1_3_6	1.54E-06	2.21E-06	2.41	CCF of three components: P21-MPC-FS-C001A & P21-MPC-FS-C002A & P21-MPC-FS-C003B
P21-MP_-FS_1_4_5	1.54E-06	2.21E-06	2.41	CCF of three components: P21-MPC-FS-C001A & P21-MPC-FS-C002B & P21-MPC-FS-C003A
P21-MP_-FS_1_4_6	1.54E-06	2.21E-06	2.41	CCF of three components: P21-MPC-FS-C001A & P21-MPC-FS-C002B & P21-MPC-FS-C003B
P21-MP_-FS_1_5_6	1.54E-06	2.21E-06	2.41	CCF of three components: P21-MPC-FS-C001A & P21-MPC-FS-C003A & P21-MPC-FS-C003B
P21-MP_-FS_2_3_4	1.54E-06	2.21E-06	2.41	CCF of three components: P21-MPC-FS-C001B & P21-MPC-FS-C002A & P21-MPC-FS-C002B
P21-MP_-FS_2_3_5	1.54E-06	2.21E-06	2.41	CCF of three components: P21-MPC-FS-C001B & P21-MPC-FS-C002A & P21-MPC-FS-C003A
P21-MP_-FS_2_3_6	1.54E-06	2.21E-06	2.41	CCF of three components: P21-MPC-FS-C001B & P21-MPC-FS-C002A & P21-MPC-FS-C003B
P21-MP_-FS_2_4_5	1.54E-06	2.21E-06	2.41	CCF of three components: P21-MPC-FS-C001B & P21-MPC-FS-C002B & P21-MPC-FS-C003A
P21-MP_-FS_2_5_6	1.54E-06	2.21E-06	2.41	CCF of three components: P21-MPC-FS-C001B & P21-MPC-FS-C003A & P21-MPC-FS-C003B
P21-MP_-FS_3_4_5	1.54E-06	2.21E-06	2.41	CCF of three components: P21-MPC-FS-C002A & P21-MPC-FS-C002B & P21-MPC-FS-C003A
P21-MP_-FS_3_4_6	1.54E-06	2.21E-06	2.41	CCF of three components: P21-MPC-FS-C002A & P21-MPC-FS-C002B & P21-MPC-FS-C003B
P21-MP_-FS_3_5_6	1.54E-06	2.21E-06	2.41	CCF of three components: P21-MPC-FS-C002A & P21-MPC-FS-C003A & P21-MPC-FS-C003B
P21-MP_-FS_4_5_6	1.54E-06	2.21E-06	2.41	CCF of three components: P21-MPC-FS-C002B & P21-MPC-FS-C003A & P21-MPC-FS-C003B
P21-MP_-FS_ALL	1.56E-04	7.15E-04	5.57	CCF of all components in group 'P21-MP_-FS'
P21-MPC-FS-C001A	2.00E-03	2.11E-03	2.04	MOTOR DRIVEN PUMP C001A FAILS TO START
P21-MPC-FS-C002A	2.00E-03	2.11E-03	2.04	MOTOR-DRIVEN PUMP C002A FAILS TO START
P21-MPC-FS-C003A	2.00E-03	2.11E-03	2.04	MOTOR-DRIVEN PUMP C0003A FAILS TO START

Table 12.9-7

Importance Measure Report for Shutdown Core Damage Frequencies Due to Internal Fire

Event Name	Probability	Fus Ves	Ach W	Description
P21-TRN-RE-HX1A	8.07E-03	1.05E-02	2.28	FAILURE TO RESTORE RCCW TRAIN 1A HX
P21-TRN-RE-HX1B	8.07E-03	9.58E-03	2.17	FAILURE TO RESTORE RCCW TRAIN 1B HX
P21-TRN-RE-HX2A	8.07E-03	1.05E-02	2.28	FAILURE TO RESTORE RCCW TRAIN 2A HX
P21-TRN-RE-HX2B	8.07E-03	9.58E-03	2.17	FAILURE TO RESTORE RCCW TRAIN 2B HX
P21-TRN-RE-HX3A	8.07E-03	1.05E-02	2.28	FAILURE TO RESTORE RCCW TRAIN 3A HX
P21-TRN-RE-HX3B	8.07E-03	9.58E-03	2.17	FAILURE TO RESTORE RCCW TRAIN 3B HX
P21-TRN-RE-PUMP1A	8.07E-03	1.05E-02	2.28	FAILURE TO RESTORE RCCW TRAIN 1A PUMP
P21-TRN-RE-PUMP1B	8.07E-03	9.58E-03	2.17	FAILURE TO RESTORE RCCW TRAIN 1B PUMP
P21-TRN-RE-PUMP2A	8.07E-03	1.05E-02	2.28	FAILURE TO RESTORE RCCW TRAIN 2A PUMP
P21-TRN-RE-PUMP2B	8.07E-03	9.58E-03	2.17	FAILURE TO RESTORE RCCW TRAIN 2B PUMP
P21-TRN-RE-PUMP3A	8.07E-03	1.05E-02	2.28	FAILURE TO RESTORE RCCW TRAIN 3A PUMP
P21-TRN-RE-PUMP3B	8.07E-03	9.58E-03	2.17	FAILURE TO RESTORE RCCW TRAIN 3B PUMP
P21-UV_-CC_ALL	1.72E-06	2.95E-06	2.65	CCF of all components in group 'P21-UV_-CC'
P30-TNK-RP-A001	2.40E-06	1.22E-05	6.03	CONDENSATE STORAGE TANK LEAKS CATASTROPHICALLY
P41-ACV-CC_1_2	2.37E-06	4.41E-06	2.8	CCF of two components: P41-ACV-CC-F004A & P41-ACV-CC-F004B
P41-ACV-CC_1_2_3	3.62E-06	7.43E-06	3.01	CCF of three components: P41-ACV-CC-F004A & P41-ACV-CC-F004B & P41-ACV-CC-F006A
P41-ACV-CC_1_2_4	3.62E-06	7.43E-06	3.01	CCF of three components: P41-ACV-CC-F004A & P41-ACV-CC-F004B & P41-ACV-CC-F006B
P41-ACV-CC_1_2_5	3.62E-06	7.43E-06	3.01	CCF of three components: P41-ACV-CC-F004A & P41-ACV-CC-F004B & P41-ACV-CC-F009A
P41-ACV-CC_1_2_6	3.62E-06	7.43E-06	3.01	CCF of three components: P41-ACV-CC-F004A & P41-ACV-CC-F004B & P41-ACV-CC-F009B
P41-ACV-CC_1_3_4	3.62E-06	7.43E-06	3.01	CCF of three components: P41-ACV-CC-F004A & P41-ACV-CC-F006A & P41-ACV-CC-F006B
P41-ACV-CC_1_3_6	3.62E-06	7.43E-06	3.01	CCF of three components: P41-ACV-CC-F004A & P41-ACV-CC-F006A & P41-ACV-CC-F009B

Table 12.9-7

Importance Measure Report for Shutdown Core Damage Frequencies Due to Internal Fire

Event Name	Probability	Fus Ves	Ach W	Description
P41-ACV-CC_1_4	2.37E-06	4.41E-06	2.8	CCF of two components: P41-ACV-CC-F004A & P41-ACV-CC-F006B
P41-ACV-CC_1_4_5	3.62E-06	7.43E-06	3.01	CCF of three components: P41-ACV-CC-F004A & P41-ACV-CC-F006B & P41-ACV-CC-F009A
P41-ACV-CC_1_4_6	3.62E-06	7.43E-06	3.01	CCF of three components: P41-ACV-CC-F004A & P41-ACV-CC-F006B & P41-ACV-CC-F009B
P41-ACV-CC_1_5_6	3.62E-06	7.43E-06	3.01	CCF of three components: P41-ACV-CC-F004A & P41-ACV-CC-F009A & P41-ACV-CC-F009B
P41-ACV-CC_1_6	2.37E-06	4.41E-06	2.8	CCF of two components: P41-ACV-CC-F004A & P41-ACV-CC-F009B
P41-ACV-CC_2_3	2.37E-06	4.41E-06	2.8	CCF of two components: P41-ACV-CC-F004B & P41-ACV-CC-F006A
P41-ACV-CC_2_3_4	3.62E-06	7.43E-06	3.01	CCF of three components: P41-ACV-CC-F004B & P41-ACV-CC-F006A & P41-ACV-CC-F006B
P41-ACV-CC_2_3_5	3.62E-06	7.43E-06	3.01	CCF of three components: P41-ACV-CC-F004B & P41-ACV-CC-F006A & P41-ACV-CC-F009A
P41-ACV-CC_2_3_6	3.62E-06	7.43E-06	3.01	CCF of three components: P41-ACV-CC-F004B & P41-ACV-CC-F006A & P41-ACV-CC-F009B
P41-ACV-CC_2_4_5	3.62E-06	7.43E-06	3.01	CCF of three components: P41-ACV-CC-F004B & P41-ACV-CC-F006B & P41-ACV-CC-F009A
P41-ACV-CC_2_5	2.37E-06	4.41E-06	2.8	CCF of two components: P41-ACV-CC-F004B & P41-ACV-CC-F009A
P41-ACV-CC_2_5_6	3.62E-06	7.43E-06	3.01	CCF of three components: P41-ACV-CC-F004B & P41-ACV-CC-F009A & P41-ACV-CC-F009B
P41-ACV-CC_3_4	2.37E-06	4.41E-06	2.8	CCF of two components: P41-ACV-CC-F006A & P41-ACV-CC-F006B
P41-ACV-CC_3_4_5	3.62E-06	7.43E-06	3.01	CCF of three components: P41-ACV-CC-F006A & P41-ACV-CC-F006B & P41-ACV-CC-F009A
P41-ACV-CC_3_4_6	3.62E-06	7.43E-06	3.01	CCF of three components: P41-ACV-CC-F006A & P41-ACV-CC-F006B & P41-ACV-CC-F009B

Table 12.9-7

Importance Measure Report for Shutdown Core Damage Frequencies Due to Internal Fire

Event Name	Probability	Fus Ves	Ach W	Description
P41-ACV-CC_3_5_6	3.62E-06	7.43E-06	3.01	CCF of three components: P41-ACV-CC-F006A & P41-ACV-CC-F009A & P41-ACV-CC-F009B
P41-ACV-CC_3_6	2.37E-06	4.41E-06	2.8	CCF of two components: P41-ACV-CC-F006A & P41-ACV-CC-F009B
P41-ACV-CC_4_5	2.37E-06	4.41E-06	2.8	CCF of two components: P41-ACV-CC-F006B & P41-ACV-CC-F009A
P41-ACV-CC_4_5_6	3.62E-06	7.43E-06	3.01	CCF of three components: P41-ACV-CC-F006B & P41-ACV-CC-F009A & P41-ACV-CC-F009B
P41-ACV-CC_5_6	2.37E-06	4.41E-06	2.8	CCF of two components: P41-ACV-CC-F009A & P41-ACV-CC-F009B
P41-ACV-CC_ALL	1.21E-04	5.50E-04	5.5	CCF of all components in group 'P41-ACV-CC'
P41-ACV-CC-F004A	2.00E-03	2.11E-03	2.04	AIR OPERATED VALVE F004A FAILS TO OPEN
P41-ACV-CC-F006A	2.00E-03	2.11E-03	2.04	AIR OPERATED VALVE F006A FAILS TO OPEN
P41-ACV-CC-F009A	2.00E-03	2.11E-03	2.04	AIR OPERATED VALVE F009A FAILS TO OPEN
P41-FAN-FR_1_2	4.44E-06	3.26E-05	8.25	CCF of two components: P41-FAN-FR-0001A & P41-FAN-FR-0001B
P41-FAN-FR_1_2_3	4.44E-07	1.70E-06	4.71	CCF of three components: P41-FAN-FR-0001A & P41-FAN-FR-0001B & P41-FAN-FR-0002A
P41-FAN-FR_1_2_4	4.44E-07	1.70E-06	4.71	CCF of three components: P41-FAN-FR-0001A & P41-FAN-FR-0001B & P41-FAN-FR-0002B
P41-FAN-FR_1_3_4	4.44E-07	1.70E-06	4.71	CCF of three components: P41-FAN-FR-0001A & P41-FAN-FR-0002A & P41-FAN-FR-0002B
P41-FAN-FR_1_4	4.44E-06	3.26E-05	8.25	CCF of two components: P41-FAN-FR-0001A & P41-FAN-FR-0002B
P41-FAN-FR_2_3	4.44E-06	3.26E-05	8.25	CCF of two components: P41-FAN-FR-0001B & P41-FAN-FR-0002A
P41-FAN-FR_2_3_4	4.44E-07	1.70E-06	4.71	CCF of three components: P41-FAN-FR-0001B & P41-FAN-FR-0002A & P41-FAN-FR-0002B
P41-FAN-FR_3_4	4.44E-06	3.26E-05	8.25	CCF of two components: P41-FAN-FR-0002A & P41-FAN-FR-0002B

Table 12.9-7

Importance Measure Report for Shutdown Core Damage Frequencies Due to Internal Fire

Event Name	Probability	Fus Ves	Ach W	Description
P41-FAN-FR_ALL	1.20E-05	1.18E-04	10.74	CCF of all components in group 'P41-FAN-FR'
P41-FAN-FS_1_2	5.26E-06	7.39E-06	2.39	CCF of two components: P41-FAN-FS-0001A & P41-FAN-FS-0001B
P41-FAN-FS_1_4	5.26E-06	7.39E-06	2.39	CCF of two components: P41-FAN-FS-0001A & P41-FAN-FS-0002B
P41-FAN-FS_2_3	5.26E-06	7.39E-06	2.39	CCF of two components: P41-FAN-FS-0001B & P41-FAN-FS-0002A
P41-FAN-FS_3_4	5.26E-06	7.39E-06	2.39	CCF of two components: P41-FAN-FS-0002A & P41-FAN-FS-0002B
P41-FAN-FS_ALL	1.42E-05	4.25E-05	3.95	CCF of all components in group 'P41-FAN-FS'
P41-MOV-CC-PMP_1_2_3	1.36E-05	4.02E-05	3.91	CCF of three components: P41-MOV-CC-PMPF002A & P41-MOV-CC-PMPF002B & P41-MOV-CC-
P41-MOV-CC-PMP_1_2_4	1.36E-05	4.02E-05	3.91	CCF of three components: P41-MOV-CC-PMPF002A & P41-MOV-CC-PMPF002B & P41-MOV-CC-
P41-MOV-CC-PMP_1_3_4	1.36E-05	4.02E-05	3.91	CCF of three components: P41-MOV-CC-PMPF002A & P41-MOV-CC-PMPF004A & P41-MOV-CC-
P41-MOV-CC-PMP_2_3_4	1.36E-05	4.02E-05	3.91	CCF of three components: P41-MOV-CC-PMPF002B & P41-MOV-CC-PMPF004A & P41-MOV-CC-
P41-MOV-CC-PMP_ALL	1.45E-04	6.63E-04	5.54	CCF of all components in group 'P41-MOV-CC-PMP'
P41-MPW-FR_ALL	3.20E-06	2.41E-05	8.39	CCF of all components in group 'P41-MPW-FR'
P41-MPW-FS_1_2_3	1.89E-05	6.25E-05	4.27	CCF of three components: P41-MPW-FS-C001A & P41-MPW-FS-C001B & P41-MPW-FS-C002A
P41-MPW-FS_1_2_4	1.89E-05	6.25E-05	4.27	CCF of three components: P41-MPW-FS-C001A & P41-MPW-FS-C001B & P41-MPW-FS-C002B
P41-MPW-FS_1_3_4	1.89E-05	6.25E-05	4.27	CCF of three components: P41-MPW-FS-C001A & P41-MPW-FS-C002A & P41-MPW-FS-C002B
P41-MPW-FS_2_3_4	1.89E-05	6.25E-05	4.27	CCF of three components: P41-MPW-FS-C001B & P41-MPW-FS-C002A & P41-MPW-FS-C002B
P41-MPW-FS_ALL	1.15E-04	5.17E-04	5.46	CCF of all components in group 'P41-MPW-FS'

Table 12.9-7

Importance Measure Report for Shutdown Core Damage Frequencies Due to Internal Fire

Event Name	Probability	Fus Ves	Ach W	Description
P41-STR-PG_1_2_3	2.11E-07	2.32E-07	2.05	CCF of three components: P41-STR-PG-D01A & P41-STR-PG-D01B & P41-STR-PG-D02A
P41-STR-PG_1_2_4	2.11E-07	2.32E-07	2.05	CCF of three components: P41-STR-PG-D01A & P41-STR-PG-D01B & P41-STR-PG-D02B
P41-STR-PG_1_3_4	2.11E-07	2.32E-07	2.05	CCF of three components: P41-STR-PG-D01A & P41-STR-PG-D02A & P41-STR-PG-D02B
P41-STR-PG_2_3_4	2.11E-07	2.32E-07	2.05	CCF of three components: P41-STR-PG-D01B & P41-STR-PG-D02A & P41-STR-PG-D02B
P41-STR-PG_ALL	5.68E-06	4.83E-05	9.38	CCF of all components in group 'P41-STR-PG'
P41-UV_-CC-PMP_ALL	1.72E-06	2.95E-06	2.65	CCF of all components in group 'P41-UV_-CC-PMP'
P52-XHE-CC-0001-B	1.77E-02	7.79E-03	1.43	OPERATOR FAILS TO OPEN STANDBY TRAIN AOV 0001-B
R11-BAC-LP-100A3	4.80E-06	2.61E-05	6.39	6.9 KV AC PIP-A LOADS BUS 1000A3 FAILS DURING OPERATION
R11-BAC-LP-100B3	4.80E-06	2.61E-05	6.39	6.9 KV AC PIP-A LOADS BUS 1000B3 FAILS DURING OPERATION
R11-BAC-LP-PIP_1_2	2.53E-07	2.56E-07	2.01	CCF of two components: R11-BAC-LP-100A3 & R11-BAC-LP-100B3
R11-BAC-TM-100A3	4.80E-06	2.61E-05	6.39	6.9 KV AC PIP-A LOADS BUS 1000A3 IN MAINTENANCE
R11-BAC-TM-100B3	4.80E-06	2.61E-05	6.39	6.9 KV AC PIP-A LOADS BUS 1000B3 IN MAINTENANCE
R11-MCB-CC-A3UATAY	4.00E-03	4.78E-03	2.18	MEDIUM VOLTAGE CIRCUIT BREAKER FOR UAT A Y-WINDING FAILS TO OPEN
R11-MCB-CC-B3UATBY	4.00E-03	4.34E-03	2.07	MEDIUM VOLTAGE CIRCUIT BREAKER FOR UAT B Y-WINDING FAILS TO OPEN
R11-MCB-CC-CCFNORM_3_7	3.18E-05	1.20E-04	4.74	CCF of two components: R11-MCB-CC-A3RATAY & R11-MCB-CC-B3RATBY
R11-MCB-CC-CCFNORM_3_8	3.18E-05	1.20E-04	4.74	CCF of two components: R11-MCB-CC-A3RATAY & R11-MCB-CC-B3UATBY

Table 12.9-7

Importance Measure Report for Shutdown Core Damage Frequencies Due to Internal Fire

Event Name	Probability	Fus Ves	Ach W	Description
R11-MCB-CC-CCFNORM_4_7	3.18E-05	1.20E-04	4.74	CCF of two components: R11-MCB-CC-A3UATAY & R11-MCB-CC-B3RATBY
R11-MCB-CC-CCFNORM_4_8	3.18E-05	1.20E-04	4.74	CCF of two components: R11-MCB-CC-A3UATAY & R11-MCB-CC-B3UATBY
R11-MCB-CC-CCFNORM_ALL	2.00E-04	9.40E-04	5.67	CCF of all components in group 'R11-MCB-CC-CCFNORM'
R11-MCB-OO-A3DGA	2.40E-03	2.63E-03	2.08	MEDIUM VOLTAGE CIRCUIT BREAKER FOR DG-A FAILS TO CLOSE
R11-MCB-OO-CCFALT_3_7	1.91E-05	6.41E-05	4.31	CCF of two components: R11-MCB-OO-A3DGA & R11-MCB-OO-B3DGA
R11-MCB-OO-CCFALT_ALL	1.20E-04	5.43E-04	5.49	CCF of all components in group 'R11-MCB-OO-CCFALT'
R11-RE_-FO-CCFUV_3_6	9.73E-06	2.58E-05	3.62	CCF of two components: R11-RE_-FO-UV00A3 & R11-RE_-FO-UV00B3
R11-RE_-FO-CCFUV_ALL	4.38E-05	1.77E-04	5	CCF of all components in group 'R11-RE_-FO-CCFUV'
R12-BAC-LP-A2-02A	4.80E-06	2.61E-05	6.39	480 VAC BUS A2-02A FAILS DURING OPERATION
R12-BAC-LP-B2-02B	4.80E-06	2.61E-05	6.39	480 VAC BUS B2-02B FAILS DURING OPERATION
R12-BAC-TM-A2-02A	4.80E-06	2.61E-05	6.39	480 VAC BUS A2-02A IN MAINTENANCE
R12-BAC-TM-B2-02B	4.80E-06	2.61E-05	6.39	480 VAC BUS B2-02B IN MAINTENANCE
R12-LCB-CO-BOA2-02A	1.20E-05	7.00E-05	6.8	R12-A2-02A XMFR OUTPUT CIRCUIT BREAKER TO BUS R12-A2-02A OPEN SPURIOUSLY
R12-LCB-CO-BOB2-02B	1.20E-05	7.00E-05	6.8	R12-B2-02B XMFR OUTPUT CIRCUIT BREAKER TO BUS R12-B2-02B OPEN SPURIOUSLY
R12-MCB-CO-BIA2-02A	1.44E-05	8.57E-05	6.92	R12-A2-02A XMFR INPUT CIRCUIT BREAKER FROM PIP BUS 1000A3 OPENS SPURIOUSLY
R12-MCB-CO-BIB2-02B	1.44E-05	8.57E-05	6.92	R12-B2-02B XMFR INPUT CIRCUIT BREAKER FROM PIP BUS 1000B3 OPENS SPURIOUSLY
R12-XFL-LP-XA2-02A	1.92E-05	1.15E-04	6.97	R12-A2-02A XMFR FROM PIP BUS 1000A3 FAILS TO OPERATE

Table 12.9-7

Importance Measure Report for Shutdown Core Damage Frequencies Due to Internal Fire

Event Name	Probability	Fus Ves	Ach W	Description
R12-XFL-LP-XB2-02B	1.92E-05	1.15E-04	6.97	R12-B2-02B XMFR FROM PIP BUS 1000B3 FAILS TO OPERATE
R13-BAC-LP-R1311	4.80E-06	3.61E-04	76.21	BUS R13-11 FAILS DURING OPERATION
R13-INV-FC-CCFSR_1_2	1.80E-06	1.35E-04	75.52	CCF of two components: R13-INV-FC-R1311 & R13-INV-FC-R1312
R13-INV-FC-CCFSR_1_2_3	6.01E-08	3.74E-06	62.81	CCF of three components: R13-INV-FC-R1311 & R13-INV-FC-R1312 & R13-INV-FC-R1321
R13-INV-FC-CCFSR_1_2_4	6.01E-08	3.74E-06	62.81	CCF of three components: R13-INV-FC-R1311 & R13-INV-FC-R1312 & R13-INV-FC-R1322
R13-INV-FC-CCFSR_1_2_5	6.01E-08	3.74E-06	62.81	CCF of three components: R13-INV-FC-R1311 & R13-INV-FC-R1312 & R13-INV-FC-R1331
R13-INV-FC-CCFSR_1_2_6	6.01E-08	3.74E-06	62.81	CCF of three components: R13-INV-FC-R1311 & R13-INV-FC-R1312 & R13-INV-FC-R1332
R13-INV-FC-CCFSR_1_2_7	6.01E-08	3.74E-06	62.81	CCF of three components: R13-INV-FC-R1311 & R13-INV-FC-R1312 & R13-INV-FC-R1341
R13-INV-FC-CCFSR_1_2_8	6.01E-08	3.74E-06	62.81	CCF of three components: R13-INV-FC-R1311 & R13-INV-FC-R1312 & R13-INV-FC-R1342
R13-INV-FC-CCFSR_ALL	1.14E-05	1.10E-01	9710	CCF of all components in group 'R13-INV-FC-CCFSR'
R13-LCB-CO-TOR1311	1.20E-05	9.06E-04	76.44	CIRCUIT BREAKER TO R13-11 OPENS SPURIOUSLY
R13-XFL-LP-CCFNSR2_ALL	4.55E-07	1.74E-06	4.73	CCF of all components in group 'R13-XFL-LP-CCFNSR2'
R16-BT_-LP-CCFA3B3_1_2	1.43E-06	1.88E-06	2.27	CCF of two components: R16-BT_-LP-R16BTA3 & R16-BT_-LP-R16BTB3
R16-BT_-LP-CCFSR_1_2	1.71E-07	1.19E-05	70.4	CCF of two components: R16-BT_-LP-R16BT11 & R16-BT_-LP-R16BT12
R16-BT_-LP-CCFSR_1_2_3	4.31E-09	1.63E-07	36.04	CCF of three components: R16-BT_-LP-R16BT11 & R16-BT_-LP-R16BT12 & R16-BT_-LP-R1
R16-BT_-LP-CCFSR_1_2_4	4.31E-09	1.63E-07	36.04	CCF of three components: R16-BT_-LP-R16BT11 & R16-BT_-LP-R16BT12 & R16-BT_-LP-R1

Table 12.9-7

Importance Measure Report for Shutdown Core Damage Frequencies Due to Internal Fire

Event Name	Probability	Fus Ves	Ach W	Description
R16-BT_-LP-CCFSR_1_2_5	4.31E-09	1.63E-07	36.04	CCF of three components: R16-BT_-LP-R16BT11 & R16-BT_-LP-R16BT12 & R16-BT_-LP-R1
R16-BT_-LP-CCFSR_1_2_6	4.31E-09	1.63E-07	36.04	CCF of three components: R16-BT_-LP-R16BT11 & R16-BT_-LP-R16BT12 & R16-BT_-LP-R1
R16-BT_-LP-CCFSR_1_2_7	4.31E-09	1.63E-07	36.04	CCF of three components: R16-BT_-LP-R16BT11 & R16-BT_-LP-R16BT12 & R16-BT_-LP-R1
R16-BT_-LP-CCFSR_1_2_8	4.31E-09	1.63E-07	36.04	CCF of three components: R16-BT_-LP-R16BT11 & R16-BT_-LP-R16BT12 & R16-BT_-LP-R1
R16-BT_-LP-CCFSR_ALL	8.14E-07	7.80E-03	9570	CCF of all components in group 'R16-BT_-LP-CCFSR'
R21-AHU-FR-AHU3_1_2	1.26E-05	3.68E-05	3.87	CCF of two components: R21-AHU-FR-3A & R21-AHU-FR-3B
R21-AHU-FS-3A	6.00E-03	7.56E-03	2.24	AIR HANDLING UNIT FAILS TO START
R21-AHU-FS-3B	6.00E-03	6.87E-03	2.13	AIR HANDLING UNIT FAILS TO START
R21-AHU-FS-AHU3_1_2	6.67E-04	3.36E-03	6.02	CCF of two components: R21-AHU-FS-3A & R21-AHU-FS-3B
R21-DG_-FR-ADG_1_2	2.95E-03	1.21E-02	5.05	CCF of two components: R21-DG_-FR-ADGA & R21-DG_-FR-ADGB
R21-DG_-FR-ADGA	5.60E-02	3.66E-02	1.61	ADG-A FAILS TO RUN
R21-DG_-FR-ADGB	5.60E-02	3.31E-02	1.55	DIESEL GENERATOR FAILS TO RUN
R21-DG_-FR-CCF_1_2	4.41E-03	2.32E-02	6.23	CCF of two components: R21-DG_-FR-DGA & R21-DG_-FR-DGB
R21-DG_-FR-DGA	5.60E-02	8.38E-02	2.41	DIESEL GENERATOR "A" FAILS TO RUN GIVEN START
R21-DG_-FR-DGB	5.60E-02	7.66E-02	2.29	DIESEL GENERATOR "B" FAILS TO RUN GIVEN START
R21-DG_-FS-ADG_1_2	1.56E-03	5.85E-03	4.72	CCF of two components: R21-DG_-FS-ADGA & R21-DG_-FS-ADGB
R21-DG_-FS-ADGA	1.40E-02	7.04E-03	1.49	DIESEL GENERATOR FAILS TO START AND LOAD
R21-DG_-FS-ADGB	1.40E-02	6.45E-03	1.45	DIESEL GENERATOR FAILS TO START AND LOAD

Table 12.9-7

Importance Measure Report for Shutdown Core Damage Frequencies Due to Internal Fire

Event Name	Probability	Fus Ves	Ach W	Description
R21-DG_-FS-CCF_1_2	2.86E-04	1.38E-03	5.79	CCF of two components: R21-DG_-FS-DGA & R21-DG_-FS-DGB
R21-DG_-FS-DGA	1.40E-02	1.92E-02	2.35	DG-A FAILS TO START AND LOAD
R21-DG_-FS-DGB	1.40E-02	1.75E-02	2.23	DG-B FAILS TO START AND LOAD
R21-DG_-TM-ADGA	4.60E-02	2.08E-02	1.43	ANCILLARY DG-A IN MAINTENANCE
R21-DG_-TM-ADGB	4.60E-02	1.81E-02	1.37	ANCILLARY DG-B IN MAINTENANCE
R21-DG_-TM-DGA	4.60E-02	5.73E-02	2.18	STANDBY DIESEL GENERATOR "A" IN MAINTENANCE
R21-DG_-TM-DGB	4.60E-02	5.14E-02	2.06	STANDBY DIESEL GENERATOR "B" IN MAINTENANCE
R21-FAN-FR-AHU2_1_2	1.26E-05	3.68E-05	3.87	CCF of two components: R21-FAN-FR-AHU2A & R21-FAN-FR-AHU2B
R21-FAN-FR-ROOF_ALL	5.68E-06	1.25E-05	3.16	CCF of all components in group 'R21-FAN-FR-ROOF'
R21-FAN-FS-ADG_1_2	6.67E-05	1.02E-04	2.49	CCF of two components: R21-FAN-FS-ADGA & R21-FAN-FS-ADGB
R21-FAN-FS-AHU2_1_2	6.67E-05	2.86E-04	5.25	CCF of two components: R21-FAN-FS-AHU2A & R21-FAN-FS-AHU2B
R21-FAN-FS-ROOF_ALL	3.00E-05	1.12E-04	4.68	CCF of all components in group 'R21-FAN-FS-ROOF'
R21-FLT-PG-ADGA	1.08E-02	5.10E-03	1.46	FILTER PLUGGED
R21-FLT-PG-DGA	1.08E-02	1.46E-02	2.32	FILTER PLUGGED
R21-FLT-PG-DGB	1.08E-02	1.33E-02	2.2	FILTER PLUGGED
R21-MCB-CC-CCFLS_1_2	5.56E-05	2.34E-04	5.16	CCF of two components: R21-MCB-CC-1LOAD1 & R21-MCB-CC-2LOAD1
R21-MOD-CC-1A	3.00E-03	3.41E-03	2.12	MOTOR-OPERATED DAMPER FAILS TO OPEN
R21-MOD-CC-1B	3.00E-03	3.08E-03	2.02	MOTOR-OPERATED DAMPER FAILS TO OPEN
R21-MOD-CC-2A	3.00E-03	3.41E-03	2.12	MOTOR-OPERATED DAMPER FAILS TO OPEN
R21-MOD-CC-2B	3.00E-03	3.08E-03	2.02	MOTOR-OPERATED DAMPER FAILS TO OPEN
R21-MOD-CC-3A	3.00E-03	3.41E-03	2.12	MOTOR-OPERATED DAMPER FAILS TO OPEN
R21-MOD-CC-3B	3.00E-03	3.08E-03	2.02	MOTOR-OPERATED DAMPER FAILS TO OPEN
R21-MOD-CC-EXH_ALL	1.50E-04	6.88E-04	5.55	CCF of all components in group 'R21-MOD-CC-EXH'

Table 12.9-7

Importance Measure Report for Shutdown Core Damage Frequencies Due to Internal Fire

Event Name	Probability	Fus Ves	Ach W	Description
R21-MOD-CC-INL_1_2	3.33E-05	1.27E-04	4.77	CCF of two components: R21-MOD-CC-1A & R21-MOD-CC-1B
R21-MOD-CC-INL_1_2_3	1.67E-06	2.90E-06	2.65	CCF of three components: R21-MOD-CC-1A & R21-MOD-CC-1B & R21-MOD-CC-2A
R21-MOD-CC-INL_1_2_4	1.67E-06	2.90E-06	2.65	CCF of three components: R21-MOD-CC-1A & R21-MOD-CC-1B & R21-MOD-CC-2B
R21-MOD-CC-INL_1_2_5	1.67E-06	2.90E-06	2.65	CCF of three components: R21-MOD-CC-1A & R21-MOD-CC-1B & R21-MOD-CC-3A
R21-MOD-CC-INL_1_2_6	1.67E-06	2.90E-06	2.65	CCF of three components: R21-MOD-CC-1A & R21-MOD-CC-1B & R21-MOD-CC-3B
R21-MOD-CC-INL_1_3_4	1.67E-06	2.90E-06	2.65	CCF of three components: R21-MOD-CC-1A & R21-MOD-CC-2A & R21-MOD-CC-2B
R21-MOD-CC-INL_1_3_6	1.67E-06	2.90E-06	2.65	CCF of three components: R21-MOD-CC-1A & R21-MOD-CC-2A & R21-MOD-CC-3B
R21-MOD-CC-INL_1_4	3.33E-05	1.27E-04	4.77	CCF of two components: R21-MOD-CC-1A & R21-MOD-CC-2B
R21-MOD-CC-INL_1_4_5	1.67E-06	2.90E-06	2.65	CCF of three components: R21-MOD-CC-1A & R21-MOD-CC-2B & R21-MOD-CC-3A
R21-MOD-CC-INL_1_4_6	1.67E-06	2.90E-06	2.65	CCF of three components: R21-MOD-CC-1A & R21-MOD-CC-2B & R21-MOD-CC-3B
R21-MOD-CC-INL_1_5_6	1.67E-06	2.90E-06	2.65	CCF of three components: R21-MOD-CC-1A & R21-MOD-CC-3A & R21-MOD-CC-3B
R21-MOD-CC-INL_1_6	3.33E-05	1.27E-04	4.77	CCF of two components: R21-MOD-CC-1A & R21-MOD-CC-3B
R21-MOD-CC-INL_2_3	3.33E-05	1.27E-04	4.77	CCF of two components: R21-MOD-CC-1B & R21-MOD-CC-2A
R21-MOD-CC-INL_2_3_4	1.67E-06	2.90E-06	2.65	CCF of three components: R21-MOD-CC-1B & R21-MOD-CC-2A & R21-MOD-CC-2B
R21-MOD-CC-INL_2_3_5	1.67E-06	2.90E-06	2.65	CCF of three components: R21-MOD-CC-1B & R21-MOD-CC-2A & R21-MOD-CC-3A

Table 12.9-7

Importance Measure Report for Shutdown Core Damage Frequencies Due to Internal Fire

Event Name	Probability	Fus Ves	Ach W	Description
R21-MOD-CC-INL_2_3_6	1.67E-06	2.90E-06	2.65	CCF of three components: R21-MOD-CC-1B & R21-MOD-CC-2A & R21-MOD-CC-3B
R21-MOD-CC-INL_2_4_5	1.67E-06	2.90E-06	2.65	CCF of three components: R21-MOD-CC-1B & R21-MOD-CC-2B & R21-MOD-CC-3A
R21-MOD-CC-INL_2_5	3.33E-05	1.27E-04	4.77	CCF of two components: R21-MOD-CC-1B & R21-MOD-CC-3A
R21-MOD-CC-INL_2_5_6	1.67E-06	2.90E-06	2.65	CCF of three components: R21-MOD-CC-1B & R21-MOD-CC-3A & R21-MOD-CC-3B
R21-MOD-CC-INL_3_4	3.33E-05	1.27E-04	4.77	CCF of two components: R21-MOD-CC-2A & R21-MOD-CC-2B
R21-MOD-CC-INL_3_4_5	1.67E-06	2.90E-06	2.65	CCF of three components: R21-MOD-CC-2A & R21-MOD-CC-2B & R21-MOD-CC-3A
R21-MOD-CC-INL_3_4_6	1.67E-06	2.90E-06	2.65	CCF of three components: R21-MOD-CC-2A & R21-MOD-CC-2B & R21-MOD-CC-3B
R21-MOD-CC-INL_3_5_6	1.67E-06	2.90E-06	2.65	CCF of three components: R21-MOD-CC-2A & R21-MOD-CC-3A & R21-MOD-CC-3B
R21-MOD-CC-INL_3_6	3.33E-05	1.27E-04	4.77	CCF of two components: R21-MOD-CC-2A & R21-MOD-CC-3B
R21-MOD-CC-INL_4_5	3.33E-05	1.27E-04	4.77	CCF of two components: R21-MOD-CC-2B & R21-MOD-CC-3A
R21-MOD-CC-INL_4_5_6	1.67E-06	2.90E-06	2.65	CCF of three components: R21-MOD-CC-2B & R21-MOD-CC-3A & R21-MOD-CC-3B
R21-MOD-CC-INL_5_6	3.33E-05	1.27E-04	4.77	CCF of two components: R21-MOD-CC-3A & R21-MOD-CC-3B
R21-MOD-CC-INL_ALL	1.50E-04	6.88E-04	5.55	CCF of all components in group 'R21-MOD-CC-INL'
R21-MP_-FR-FOPUMP_ALL	1.42E-05	4.25E-05	3.95	CCF of all components in group 'R21-MP_-FR-FOPUMP'
R21-MP_-FS-ADG_1_2	2.22E-04	5.43E-04	3.4	CCF of two components: R21-MP_-FS-FOADGA & R21-MP_-FS-FOADGB

Table 12.9-7

Importance Measure Report for Shutdown Core Damage Frequencies Due to Internal Fire

Event Name	Probability	Fus Ves	Ach W	Description
R21-MP_-FS-FOPUMP_ALL	1.00E-04	4.45E-04	5.41	CCF of all components in group 'R21-MP_-FS-FOPUMP'
R21-NSC-TM-ANCA	1.50E-03	8.85E-03	6.84	ADG BUS A IN TEST OR MAINTENANCE
R21-RE_-FO-ADG_1_2	9.73E-05	1.77E-04	2.78	CCF of two components: R21-RE_-FO-ADGA & R21-RE_-FO-ADGB
R21-TRN-RE-FOADGA	2.42E-02	1.37E-02	1.55	FAILURE TO RESTORE FUEL OIL TRANSFER TRAIN FOR ADG-A
R21-TRN-RE-FOADGB	2.42E-02	1.25E-02	1.5	FAILURE TO RESTORE FUEL OIL TRANSFER TRAIN FOR ADG-A
R21-UV_-CC-FO_ALL	5.00E-06	1.09E-05	3.12	CCF of all components in group 'R21-UV_-CC-FO'
R21-XHE-FO-ADG	1.61E-02	7.46E-02	5.54	OPERATOR FAILS TO CONTROL THE LOADS ON ANCILLARY DG BUSES
R21-XHE-FO-ADGCROSS	1.61E-02	8.26E-03	1.5	OPERATOR FAILS TO CROSS-TIE THE ANCILLARY DG BUSES
T23-POL-RP-SP	7.20E-06	2.49E-03	345.03	SUPPRESSION POOL LEAKS CATASTROPHICALLY
T31-P54-SUPPLY	9.00E-01	5.02E-03	1	CIS SYSTEM NORMAL NITROGEN SUPPLY
U43-TNK-RP-T1A	3.72E-05	7.99E-05	3.12	PRIMARY TANK 1A FAILS CATASTOPHICALLY
U43-XHE-FO-LPCI	1.61E-03	9.59E-03	6.89	OPERATOR FAILS TO ACTUATE U43 IN LPCI MODE
XXX-XHE-FO-LPMAKEUP	1.61E-02	4.09E-01	25.96	OP. FAILS TO RECOG. NEED FOR LOW PRESS. MAKEUP AFTER DEPRESSURIZATION

12.10 INSIGHTS

12.10.1 Insights from Full-Power Fire CDF and LRF Models

The ESBWR probabilistic internal fire analysis highlights the following insights regarding the fire mitigation capability of the ESBWR:

(1) The ESBWR, due to its basic layout and safety design features, is inherently capable of mitigating potential internal fires. Safety system redundancy and physical separation by fire barriers ensure that in all cases a single fire limits damage to a single safety system division or only one system of defense-in-depth (DID) redundancy. Fire propagation to neighboring areas presents a relatively minor risk contribution except the fire propagation scenarios between the N-DCIS train A room and the DPS room in the Control Building.

(2) The ESBWR internal events PRA model assumes that both trains of standby liquid control (SLC) system are required to mitigate the accident consequences from the ATWS sequences, which is conservative. This is indicated by the top cutsets for full-power fire core damage frequency in Table 12.9-4, which show that core damage occurs with the common cause failure of control rod binding and the equipment failures (mainly the failure of one SLC train) induced-by a fire in a single fire area. It also uses conservative values for the common cause failure of the software and control rod mechanical binding failure. This leads to significant contributions from the ATWS sequences to the total fire CDF. On the other hand, this also indicates that ESBWR plant design is safer than the traditional plants, which typically do not include ATWS sequences in their fire PRA models.

(3) Fires in the control room are assumed to fail the execution of all post-initiator human actions. One feature relevant to the design is that a fire in the control room does not affect the automatic actuations of the safety systems. Additionally, the existence of remote shutdown panels allows the opportunity to perform manual actuations for failed automatic actuations that may occur.

12.10.2 Insights from Shutdown Fire CDF Model

The following insights are obtained from the ESBWR shutdown fire CDF model:

(1) The ESBWR plant has excellent capability to mitigate the consequences due to postulated internal fires. The separation criteria incorporated in the ESBWR design, for the safety-related systems and RTNSS systems, greatly enhances the redundancy and ensures that a single fire cannot defeat a whole system.

(2) The dominant risk contributors with respect to fire scenarios are the postulated fires in turbine building general area and the switchyard area. As stated in Subsection 12.8.4, conservatism is embedded in the shutdown modeling by assuming a fire in these two fire areas can induce a shutdown initiating event and fail all the components in the subject fire area. With the exception of large turbine building fires, both fire areas are well accessible for fire suppression. Therefore, the shutdown fire risk analysis proves that the robustness of ESBWR plant against the postulated fires.

(3) Several CCF basic events, pre-initiator and post-initiator operation actions contribute significantly to the fire shutdown CDF.

a. While the GDCS system CCF events have some embedded conservatism in the data analysis, their risk contribution is considered as reasonable since the CCF events defeat the GDCS system functions.

b. The risk contributions due to the misposition of valves, especially valve G21-F334 whose failure defeats both FAPCS and FPS injection path, have been significantly reduced with design change to add monitoring and alarm capability in main control room for the valve positions of G21-F334.

c. The contribution from post-initiator operator actions is conservative in that operators have plenty of response time during shutdown. Multiple shifts could be expected for some operator actions, which is highly unlikely for the operators not to realize the need to perform certain obvious operator actions (e.g., operators fail to recognize the need for low pressure makeup after depressurization).

12.10.3 Insights from Sensitivity Studies

Based on the sensitivity study cases in subsection 12.9.2, assumption 18.d is determined to be a key assumption because its alternate assumption would result in significant fire risk increases.

Other insights from sensitivity studies related to fire analysis are summarized in the following sub-sections in NEDO-33201 Section 11:

- Subsection 11.3.3.2 – Focus Level 1 Fire
- Subsection 11.3.4.2 – Focus Level 2 Fire
- Subsection 11.3.7 – Fire Sensitivity

Additional insights on fire watches for breached fire barriers under shutdown conditions are summarized as below.

12.10.3.1 Insights on Fire Watches for Breached Fire Barriers under Shutdown Conditions

DCD Tier , Subsection 9.5.1.15, Fire Protection Program, discusses the organization and responsibilities in Subsection 9.5.1.15.2. The site engineer in charge of the Fire Protection Program is responsible for assuring the availability and acceptability of:

> *"- Fire barriers including fire rated walls, floors and ceilings, fire rated doors, dampers, etc., fire stops and wraps, and fire retardant coatings. Procedures specifically address the administrative controls to be put in place, including fire watches, when a fire barrier is breached for maintenance*."

Therefore, it is up to the site Fire Protection Engineer (FPE) to decide whether a roving fire watch is adequate or a continuous fire watch is required. For the modeled fire barriers, their risk importance values based on the shutdown CDF cutsets have been documented in NEDO-33201 Table 11.3-49. It is assumed that the site FPE will use the risk importance values as an input to implement compensatory actions when a fire barrier is breached for maintenance, which include choosing between the roving and continuous fire watches.

Based on the assumptions 10 and 11 in Subsection 12.2.3 and the shutdown fire barrier sensitivity results in Tables 11.3-49 and 11.3-50, there are three cases of fire barriers modeled for shutdown fire PRA:

1. Only one fire barrier exists on the fire propagation path. In this case, there are two sub-cases:
    a. The fire barriers are fire doors: the fire scenarios for fire propagation between fire areas F1152 and F1162, F4250 & F4260, F4550 & F4560, and F7300A & F7300B fall in this sub-case.
    b. The fire barriers are walls or sealed penetrations: the fire propagation scenario for fire areas F9150 & F9160 falls in this sub-case.
2. Multiple fire barriers in series exist on the fire propagation paths. In this case, the two target fire areas are well separated by a third fire area. Since the two fire areas contain components for the two redundant trains, it is assumed that simultaneous breaching of the multiple fire barriers in series is forbidden. The following are the shutdown fire scenarios included in this case:
    - Fire areas F3301 & F3302 are separated by a corridor (fire area F3100).
    - Fire areas F5350 & F5360 are separated by a corridor (fire area F5100).

For the modeled fire scenario in sub-case 1a, the breaching of the fire barrier without a continuous fire watch may result in an unacceptable risk increase. Therefore, as an insight from shutdown fire PRA, a procedure requirement will be added to DCD Tier 2, Chapter 19, in Table 19.2-3 to request a continuous fire watch for the breaching of the fire door between these fire areas.

For sub-case 1b, a maintenance activity that requires breaching of the fire barriers (walls or sealed penetrations) is unlikely. Even if a breaching of fire barrier is assumed to be required, a roving fire watch should still be adequate for the modeled fire scenarios since the risk increase is not significant.

For case 2, if simultaneous breaching of the multiple fire barriers in series is not allowed and only one fire barrier is breached, the fire barrier failure probability for the most limiting fire propagation path should be the failure of one fire door, which is 7.40E-3. For fire scenario with fire areas F3301 and F3302, the risk increase without any fire watch is not significant. The same conclusion can be drawn for the fire scenario for fire areas F5350 and F5360.

In an unlikely situation that simultaneous breaching of the multiple fire barriers in series on the fire propagation path has to be requested for fire scenarios in case 2, the fire risk increase associated with a roving fire watch for fire scenarios with fire areas F3301 and F3302, F5350 and F5360 could become significant. Therefore, a continuous fire watch should be required for these fire scenarios.

In summary, the choice of a fire watch will depend on the specific characteristics of a fire scenario and the COL holder's administrative control of the breached fire barriers for maintenance activities. The following risk insight will be added into DCD Tier 2, Chapter 19, in Table 19.2-3, which will require continuous fire watch for the breached fire barriers:

> *During shutdown conditions, a continuous fire watch is required for the following scenarios with breached fire barriers for maintenance activities:*
>
> - *The breaching of the fire doors between fire areas F1152 and F1162 (the reactor building fire areas that house RWCU pumps) and between fire areas F4250 and F4260 (the turbine building fire areas that house the RCCW pumps)*

- *The simultaneously breaching of the multiple fire barriers that can open fire areas F3301 and F3302 (the N-DCIS room fire areas) to fire area F3100 (the corridor fire area) at the same time.*
- *The simultaneously breaching of the multiple fire barriers that can open fire areas F5350 and F5360 (the PIP electric equipment room fire areas) to fire area F5100 (the corridor fire area) at the same time.*

12.10.4 Key Insights and Assumptions

The key insights and assumptions for the ESBWR fire analysis are summarized as follows:

(1) The communication links between the main control room (MCR) and the DCIS rooms do not include any copper or other wire conductors that could potentially cause fire-induced spurious actuations that could adversely affect safe shutdown.

(2) The exposure of the distributed control and information system (DCIS) equipment to heat and smoke caused by a fire in a single fire area does not cause spurious actuations that could adversely affect safe shutdown.

(3) During shutdown conditions, a fire barrier may not be intact due to maintenance activities. However, an added fire watch would not only increase the success probability of fire detection and suppression, but also help restore the fire barrier in time to prevent fire propagation. Shutdown fire risks related to the fire barriers are evaluated and managed in accordance with the outage risk management program of 10 CFR 50.65(a)(4). During shutdown conditions, a continuous fire watch is required for the following scenarios with breached fire barriers for maintenance activities:

   a. The breaching of the fire doors between fire areas F1152 and F1162 (the reactor building fire areas that house RWCU pumps) and between fire areas F4250 and F4260 (the turbine building fire areas that house the RCCW pumps)

   b. The simultaneously breaching of the multiple fire barriers that can open fire areas F3301 and F3302 (the N-DCIS room fire areas) to fire area F3100 (the corridor fire area) at the same time.

   c. The simultaneously breaching of the multiple fire barriers that can open fire areas F5350 and F5360 (the PIP electric equipment room fire areas) to fire area F5100 (the corridor fire area) at the same time.

(4) The DPS load drivers in the Reactor Building should be divided into two groups, whose locations and cable routing follow the separation criteria of PIP A and B components and cables.

12.11 CONCLUSIONS

The main conclusion that can be drawn from the ESBWR probabilistic internal fire analysis is that the risk from internal fires is acceptably low. The estimated core damage frequency and large release frequency for all analyzed scenarios even when using a conservative analysis are typically lower than the internal events results. The shutdown fire CDF is higher than the internal events shutdown CDF. However, the shutdown fire PRA model is developed with significant conservatism, which can be refined following the detailed designs.

The ESBWR is inherently safe with respect to internal fire events. All potential fires have been analyzed and it has been shown that the plant can be safely shut down at low risk to plant personnel and the general public.

12.12 REFERENCES

12-1 NUREG/CR-6850, EPRI 1011989, September 2005, Fire PRA Methodology for Nuclear Power Facilities, Vol. 2: Detailed Methodology.

12-2 RES/OERAB/S02-01, January 2002, Fire Events – Update of U.S. Operating Experience, 1986 – 1999.

12-3 AEOD/S97-03, "Special Study, Fire Events – Feedback of U.S. Operating Experience", June 1997.

12-4 ESBWR Design Control Document, 26A6642 Rev. 06.

12-5 NEDE/NEDO-33386 Revision 01, ESBWR Plant Flood Zone Definition Drawings and Other PRA Supporting Information.

APPENDIX 12A

LIST OF TABLES

Table 12A-1 F1110 - Fire Compartment Ignition Source Data Sheet (ISDS) 12A-2
Table 12A-2 F1120 - Fire Compartment Ignition Source Data Sheet (ISDS) 12A-3
Table 12A-3 F1130 - Fire Compartment Ignition Source Data Sheet (ISDS) 12A-4
Table 12A-4 F1140 - Fire Compartment Ignition Source Data Sheet (ISDS) 12A-5
Table 12A-5 F1150 - Fire Compartment Ignition Source Data Sheet (ISDS) 12A-6
Table 12A-6 F1152 - Fire Compartment Ignition Source Data Sheet (ISDS) 12A-7
Table 12A-7 F1160 - Fire Compartment Ignition Source Data Sheet (ISDS) 12A-8
Table 12A-8 F1162 - Fire Compartment Ignition Source Data Sheet (ISDS) 12A-9
Table 12A-9 F1170 - Fire Compartment Ignition Source Data Sheet (ISDS) 12A-10
Table 12A-10 F1203 - Fire Compartment Ignition Source Data Sheet (ISDS) 12A-11
Table 12A-11 F1210 - Fire Compartment Ignition Source Data Sheet (ISDS) 12A-12
Table 12A-12 F1220 - Fire Compartment Ignition Source Data Sheet (ISDS) 12A-13
Table 12A-13 F1230 - Fire Compartment Ignition Source Data Sheet (ISDS) 12A-14
Table 12A-14 F1240 - Fire Compartment Ignition Source Data Sheet (ISDS) 12A-15
Table 12A-15 F1262 - Fire Compartment Ignition Source Data Sheet (ISDS) 12A-16
Table 12A-16 F1311 - Fire Compartment Ignition Source Data Sheet (ISDS) 12A-17
Table 12A-17 F1321 - Fire Compartment Ignition Source Data Sheet (ISDS) 12A-18
Table 12A-18 F1331 - Fire Compartment Ignition Source Data Sheet (ISDS) 12A-19
Table 12A-19 F1341 - Fire Compartment Ignition Source Data Sheet (ISDS) 12A-20
Table 12A-20 F1600 - Fire Compartment Ignition Source Data Sheet (ISDS) 12A-21
Table 12A-21 F1770 - Fire Compartment Ignition Source Data Sheet (ISDS) 12A-22
Table 12A-22 F2100 - Fire Compartment Ignition Source Data Sheet (ISDS) 12A-23
Table 12A-23 F3110 - Fire Compartment Ignition Source Data Sheet (ISDS) 12A-24
Table 12A-24 F3120 - Fire Compartment Ignition Source Data Sheet (ISDS) 12A-25
Table 12A-25 F3130 - Fire Compartment Ignition Source Data Sheet (ISDS) 12A-26
Table 12A-26 F3140 - Fire Compartment Ignition Source Data Sheet (ISDS) 12A-27
Table 12A-27 F3150 - Fire Compartment Ignition Source Data Sheet (ISDS) 12A-28
Table 12A-28 F3270 - Fire Compartment Ignition Source Data Sheet (ISDS) 12A-29
Table 12A-29 F3301 - Fire Compartment Ignition Source Data Sheet (ISDS) 12A-30
Table 12A-30 F3302 - Fire Compartment Ignition Source Data Sheet (ISDS) 12A-31
Table 12A-31 F4197 - Fire Compartment Ignition Source Data Sheet (ISDS) 12A-32
Table 12A-32 F4250 - Fire Compartment Ignition Source Data Sheet (ISDS) 12A-33
Table 12A-33 F4260 - Fire Compartment Ignition Source Data Sheet (ISDS) 12A-34
Table 12A-34 F4271 - Fire Compartment Ignition Source Data Sheet (ISDS) 12A-35
Table 12A-35 F4272 - Fire Compartment Ignition Source Data Sheet (ISDS) 12A-36
Table 12A-36 F4273 - Fire Compartment Ignition Source Data Sheet (ISDS) 12A-37
Table 12A-37 F4302 - Fire Compartment Ignition Source Data Sheet (ISDS) 12A-38
Table 12A-38 F4303 - Fire Compartment Ignition Source Data Sheet (ISDS) 12A-39
Table 12A-39 F4403 - Fire Compartment Ignition Source Data Sheet (ISDS) 12A-40
Table 12A-40 F4550 - Fire Compartment Ignition Source Data Sheet (ISDS) 12A-41
Table 12A-41 F4560 - Fire Compartment Ignition Source Data Sheet (ISDS) 12A-42
Table 12A-42 F5100 - Fire Compartment Ignition Source Data Sheet (ISDS) 12A-43

Table 12A-43 F5151 - Fire Compartment Ignition Source Data Sheet (ISDS) 12A-44
Table 12A-44 F5153 - Fire Compartment Ignition Source Data Sheet (ISDS) 12A-45
Table 12A-45 F5154 - Fire Compartment Ignition Source Data Sheet (ISDS) 12A-46
Table 12A-46 F5157 - Fire Compartment Ignition Source Data Sheet (ISDS) 12A-47
Table 12A-47 F5158 - Fire Compartment Ignition Source Data Sheet (ISDS) 12A-48
Table 12A-48 F5161 - Fire Compartment Ignition Source Data Sheet (ISDS) 12A-49
Table 12A-49 F5163 - Fire Compartment Ignition Source Data Sheet (ISDS) 12A-50
Table 12A-50 F5164 - Fire Compartment Ignition Source Data Sheet (ISDS) 12A-51
Table 12A-51 F5167 - Fire Compartment Ignition Source Data Sheet (ISDS) 12A-52
Table 12A-52 F5168 - Fire Compartment Ignition Source Data Sheet (ISDS) 12A-53
Table 12A-53 F5201 - Fire Compartment Ignition Source Data Sheet (ISDS) 12A-54
Table 12A-54 F5202 - Fire Compartment Ignition Source Data Sheet (ISDS) 12A-55
Table 12A-55 F5203 - Fire Compartment Ignition Source Data Sheet (ISDS) 12A-56
Table 12A-56 F5204 - Fire Compartment Ignition Source Data Sheet (ISDS) 12A-57
Table 12A-57 F5205 - Fire Compartment Ignition Source Data Sheet (ISDS) 12A-58
Table 12A-58 F5250 - Fire Compartment Ignition Source Data Sheet (ISDS) 12A-59
Table 12A-59 F5251 - Fire Compartment Ignition Source Data Sheet (ISDS) 12A-60
Table 12A-60 F5260 - Fire Compartment Ignition Source Data Sheet (ISDS) 12A-61
Table 12A-61 F5261 - Fire Compartment Ignition Source Data Sheet (ISDS) 12A-62
Table 12A-62 F5350 - Fire Compartment Ignition Source Data Sheet (ISDS) 12A-63
Table 12A-63 F5360 - Fire Compartment Ignition Source Data Sheet (ISDS) 12A-64
Table 12A-64 F7100 - Fire Compartment Ignition Source Data Sheet (ISDS) 12A-65
Table 12A-65 F7300A - Fire Compartment Ignition Source Data Sheet (ISDS) 12A-66
Table 12A-66 F7300B - Fire Compartment Ignition Source Data Sheet (ISDS)..... 12A-67
Table 12A-67 F9150 - Fire Compartment Ignition Source Data Sheet (ISDS) 12A-68
Table 12A-68 F9160 - Fire Compartment Ignition Source Data Sheet (ISDS) 12A-69
Table 12A-69 F19101 - Fire Compartment Ignition Source Data Sheet (ISDS) 12A-70
Table 12A-70 F19150 - Fire Compartment Ignition Source Data Sheet (ISDS) 12A-71
Table 12A-71 F19160 - Fire Compartment Ignition Source Data Sheet (ISDS) 12A-72
Table 12A-72 F19161 - Fire Compartment Ignition Source Data Sheet (ISDS) 12A-73
Table 12A-73 F39151 - Fire Compartment Ignition Source Data Sheet (ISDS) 12A-74
Table 12A-74 F39161 - Fire Compartment Ignition Source Data Sheet (ISDS) 12A-75
Table 12A-75 F39252 - Fire Compartment Ignition Source Data Sheet (ISDS) 12A-76
Table 12A-76 F39253 - Fire Compartment Ignition Source Data Sheet (ISDS) 12A-77
Table 12A-77 F39262 - Fire Compartment Ignition Source Data Sheet (ISDS) 12A-78
Table 12A-78 F39263 - Fire Compartment Ignition Source Data Sheet (ISDS) 12A-79
Table 12A-79 FSWYD - Fire Compartment Ignition Source Data Sheet (ISDS) 12A-80

12A. FIRE COMPARTMENT IGNITION SOURCE DATA SHEETS

This appendix includes the fire compartment ignition source data sheets, which calculate the ignition frequencies for all unscreened fire areas.

Table 12A-1

F1110 - Fire Compartment Ignition Source Data Sheet (ISDS)

Compartment Description									
	Fire Area		Fire Area F1110						
	Fire Compartment		F1110	HCU A					
Compartment Fire Ignition Frequency									
Step 1.1	Plant Location ID		CAR						
	Plant Location Description		Control/Auxiliary/Reactor Building						
Step 1.2	Location Weighting Factor (WFL)		1.00E+00	Plant Location					
	Location Weighting Factor (WFL)		1.00E+00	Plant Wide Components					
Compartment Ignition Sources		Plant	App. to	Weighting	Sources in	Sources in	Weighting	Fire	**Ignition Source**
(FIF)		Location	This Area	Factor	Compartment	Plant Location	Factor	Frequency	**Frequency**
Bin #	Ignition Source	L	APP	WFL	(A)	(B)	WFIS=(A)/(B)	(FF)	**(FIF)**
01	Batteries	BR	1	1	0	21	0.000	7.50E-04	**0.00E+00**
02	Reactor Coolant Pump	COP	0	1	0	0	0.000	6.10E-03	**0.00E+00**
03	Transients and Hotwork	COP	0	1	0	0	0.000	2.00E-03	**0.00E+00**
04	Main Control Board	CR	0	1	0	0	0.000	2.50E-03	**0.00E+00**
05	Cable Fires caused by welding and cutting (Cntrl/Aux/Rx Building)	CAR	1	1	3	1166	0.003	1.60E-03	**4.12E-06**
06	Transient fires caused by welding and cutting (Cntrl/Aux/Rx Building)	CAR	1	1	1	53	0.019	9.70E-03	**1.83E-04**
07	Transients (Cntrl/Aux/Rx Building)	CAR	1	1	1	53	0.019	3.90E-03	**7.36E-05**
08	Diesel Generators	DGR	1	1	0	4	0.000	2.10E-02	**0.00E+00**
09	Air Compressors	XX	1	1	0	4	0.000	2.40E-03	**0.00E+00**
10	Battery Chargers	XX	1	1	0	15	0.000	1.80E-03	**0.00E+00**
11	Cable Fires caused by welding and cutting (Plant-Wide)	XX	0	1	0	430	0.000	2.00E-03	**0.00E+00**
12	Cable Run	XX	1	1	3	1820	0.002	4.40E-03	**7.25E-06**
13	Dryers	XX	1	1	0	2	0.000	2.60E-03	**0.00E+00**
14	Electric Motors	XX	1	1	0	8	0.000	4.60E-03	**0.00E+00**
15	Electrical Cabinets	XX	1	1	1	530	0.002	4.50E-02	**8.49E-05**
16	High Energy Arcing Faults	XX	1	1	0	77	0.000	1.50E-03	**0.00E+00**
17	Hydrogen Tanks	XX	1	1	0	2	0.000	1.70E-03	**0.00E+00**
18	Junction Boxes	XX	1	1	3	1820	0.002	1.90E-03	**3.13E-06**
19	Misc. Hydrogen Fires	XX	1	1	0	0	0.000	2.50E-03	**0.00E+00**
20	Off-gas/H2 Recombiner (BWR)	XX	1	1	0	2	0.000	4.40E-02	**0.00E+00**
21	Pumps	XX	1	1	0	43	0.000	2.10E-02	**0.00E+00**
22	RPS MG Sets	XX	0	1	0	0	0.000	1.60E-03	**0.00E+00**
23a	Transformers (oil filled)	XX	1	1	0	0	0.000	9.90E-03	**0.00E+00**
23b	Transformers (dry)	XX	1	1	0	67	0.000	9.90E-03	**0.00E+00**
24	Transient fires caused by welding and cutting (Plant-Wide)	XX	0	1	0	78	0.000	4.90E-03	**0.00E+00**
25	Transients (Plant-Wide)	XX	0	1	0	78	0.000	9.90E-03	**0.00E+00**
26	Ventilation Subsystems	XX	1	1	0	26	0.000	7.40E-03	**0.00E+00**
27	Transformer - Catastrophic	TY	0	1	0	9	0.000	6.00E-03	**0.00E+00**
28	Transformer - Non Catastrophic	TY	0	1	0	8	0.000	1.20E-02	**0.00E+00**
29	Yard Transformers (others)	TY	0	1	0	1	0.000	2.20E-03	**0.00E+00**
30	Boiler	TB	0	1	0	2	0.000	1.10E-03	**0.00E+00**
31	Cable Fires caused by welding and cutting (Turbine Building)	TB	0	1	0	224	0.000	1.60E-03	**0.00E+00**
32	Main Feedwater Pumps	TB	1	1	0	8	0.000	1.30E-02	**0.00E+00**
33	Turbine Generator Excitor	TB	0	1	0	1	0.000	3.90E-03	**0.00E+00**
34	Turbine Generator Hydrogen	TB	0	1	0	1	0.000	6.50E-03	**0.00E+00**
35	Turbine Generator Oil	TB	0	1	0	1	0.000	9.50E-03	**0.00E+00**
36	Transient fires caused by welding and cutting (Turbine Building)	TB	0	1	0	17	0.000	8.20E-03	**0.00E+00**
37	Transients (Turbine Building)	TB	0	1	0	17	0.000	8.50E-03	**0.00E+00**
Compartment Fire Frequency (FL)			**3.56E-04**						
Notes:									
(A) Number of Ignition Sources in Compartment									
(B) Total Number of Ignition Sources in Selected Plant Location or in Plant for Plant Wide Components									
*Ignition Source Frequency: FIF = WFL*WFIS*FF*									
Compartment Fire Frequency: FL = SUM(FIF)									

Table 12A-2

F1120 - Fire Compartment Ignition Source Data Sheet (ISDS)

Compartment Description									
	Fire Area		Fire Area F1120						
	Fire Compartment		F1120	HCU C					
Compartment Fire Ignition Frequency									
Step 1.1	Plant Location ID		CAR						
	Plant Location Description		Control/Auxiliary/Reactor Building						
Step 1.2	Location Weighting Factor (WFL)		1.00E+00	Plant Location					
	Location Weighting Factor (WFL)		1.00E+00	Plant Wide Components					
Compartment Ignition Sources		Plant	App. to	Weighting	Sources in	Sources in	Weighting	Fire	**Ignition Source**
(FIF)		Location	This Area	Factor	Compartment	Plant Location	Factor	Frequency	**Frequency**
Bin #	Ignition Source	L	APP	WFL	(A)	(B)	WFIS=(A)/(B)	(FF)	**(FIF)**
01	Batteries	BR	1	1	0	21	0.000	7.50E-04	**0.00E+00**
02	Reactor Coolant Pump	COP	0	1	0	0	0.000	6.10E-03	**0.00E+00**
03	Transients and Hotwork	COP	0	1	0	0	0.000	2.00E-03	**0.00E+00**
04	Main Control Board	CR	0	1	0	0	0.000	2.50E-03	**0.00E+00**
05	Cable Fires caused by welding and cutting (Cntrl/Aux/Rx Building)	CAR	1	1	8	1166	0.007	1.60E-03	**1.10E-05**
06	Transient fires caused by welding and cutting (Cntrl/Aux/Rx Building)	CAR	1	1	1	53	0.019	9.70E-03	**1.83E-04**
07	Transients (Cntrl/Aux/Rx Building)	CAR	1	1	1	53	0.019	3.90E-03	**7.36E-05**
08	Diesel Generators	DGR	1	1	0	4	0.000	2.10E-02	**0.00E+00**
09	Air Compressors	XX	1	1	0	4	0.000	2.40E-03	**0.00E+00**
10	Battery Chargers	XX	1	1	0	15	0.000	1.80E-03	**0.00E+00**
11	Cable Fires caused by welding and cutting (Plant-Wide)	XX	0	1	0	430	0.000	2.00E-03	**0.00E+00**
12	Cable Run	XX	1	1	8	1820	0.004	4.40E-03	**1.93E-05**
13	Dryers	XX	1	1	0	2	0.000	2.60E-03	**0.00E+00**
14	Electric Motors	XX	1	1	0	8	0.000	4.60E-03	**0.00E+00**
15	Electrical Cabinets	XX	1	1	1	530	0.002	4.50E-02	**8.49E-05**
16	High Energy Arcing Faults	XX	1	1	0	77	0.000	1.50E-03	**0.00E+00**
17	Hydrogen Tanks	XX	1	1	0	2	0.000	1.70E-03	**0.00E+00**
18	Junction Boxes	XX	1	1	8	1820	0.004	1.90E-03	**8.35E-06**
19	Misc. Hydrogen Fires	XX	1	1	0	0	0.000	2.50E-03	**0.00E+00**
20	Off-gas/H2 Recombiner (BWR)	XX	1	1	0	2	0.000	4.40E-02	**0.00E+00**
21	Pumps	XX	1	1	0	43	0.000	2.10E-02	**0.00E+00**
22	RPS MG Sets	XX	0	1	0	0	0.000	1.60E-03	**0.00E+00**
23a	Transformers (oil filled)	XX	1	1	0	0	0.000	9.90E-03	**0.00E+00**
23b	Transformers (dry)	XX	1	1	0	67	0.000	9.90E-03	**0.00E+00**
24	Transient fires caused by welding and cutting (Plant-Wide)	XX	0	1	0	78	0.000	4.90E-03	**0.00E+00**
25	Transients (Plant-Wide)	XX	0	1	0	78	0.000	9.90E-03	**0.00E+00**
26	Ventilation Subsystems	XX	1	1	0	26	0.000	7.40E-03	**0.00E+00**
27	Transformer - Catastrophic	TY	0	1	0	9	0.000	6.00E-03	**0.00E+00**
28	Transformer - Non Catastrophic	TY	0	1	0	8	0.000	1.20E-02	**0.00E+00**
29	Yard Transformers (others)	TY	0	1	0	1	0.000	2.20E-03	**0.00E+00**
30	Boiler	TB	0	1	0	2	0.000	1.10E-03	**0.00E+00**
31	Cable Fires caused by welding and cutting (Turbine Building)	TB	0	1	0	224	0.000	1.60E-03	**0.00E+00**
32	Main Feedwater Pumps	TB	1	1	0	8	0.000	1.30E-02	**0.00E+00**
33	Turbine Generator Excitor	TB	0	1	0	1	0.000	3.90E-03	**0.00E+00**
34	Turbine Generator Hydrogen	TB	0	1	0	1	0.000	6.50E-03	**0.00E+00**
35	Turbine Generator Oil	TB	0	1	0	1	0.000	9.50E-03	**0.00E+00**
36	Transient fires caused by welding and cutting (Turbine Building)	TB	0	1	0	17	0.000	8.20E-03	**0.00E+00**
37	Transients (Turbine Building)	TB	0	1	0	17	0.000	8.50E-03	**0.00E+00**
Compartment Fire Frequency (FL)			**3.80E-04**						
Notes:									
(A) Number of Ignition Sources in Compartment									
(B) Total Number of Ignition Sources in Selected Plant Location or in Plant for Plant Wide Components									
*Ignition Source Frequency: FIF = WFL*WFIS*FF*									
Compartment Fire Frequency: FL = SUM(FIF)									

Table 12A-3

F1130 - Fire Compartment Ignition Source Data Sheet (ISDS)

Compartment Description									
	Fire Area		Fire Area F1130						
	Fire Compartment		F1130	HCU B					
Compartment Fire Ignition Frequency									
Step 1.1	Plant Location ID		CAR						
	Plant Location Description		Control/Auxiliary/Reactor Building						
Step 1.2	Location Weighting Factor (WFL)		1.00E+00	Plant Location					
	Location Weighting Factor (WFL)		1.00E+00	Plant Wide Components					
Compartment Ignition Sources		Plant	App. to	Weighting	Sources in	Sources in	Weighting	Fire	**Ignition Source**
(FIF)		Location	This Area	Factor	Compartment	Plant Location	Factor	Frequency	**Frequency**
Bin #	Ignition Source	L	APP	WFL	(A)	(B)	WFIS=(A)/(B)	(FF)	**(FIF)**
01	Batteries	BR	1	1	0	21	0.000	7.50E-04	**0.00E+00**
02	Reactor Coolant Pump	COP	0	1	0	0	0.000	6.10E-03	**0.00E+00**
03	Transients and Hotwork	COP	0	1	0	0	0.000	2.00E-03	**0.00E+00**
04	Main Control Board	CR	0	1	0	0	0.000	2.50E-03	**0.00E+00**
05	Cable Fires caused by welding and cutting (Cntrl/Aux/Rx Building)	CAR	1	1	0	1166	0.000	1.60E-03	**0.00E+00**
06	Transient fires caused by welding and cutting (Cntrl/Aux/Rx Building)	CAR	1	1	1	53	0.019	9.70E-03	**1.83E-04**
07	Transients (Cntrl/Aux/Rx Building)	CAR	1	1	1	53	0.019	3.90E-03	**7.36E-05**
08	Diesel Generators	DGR	1	1	0	4	0.000	2.10E-02	**0.00E+00**
09	Air Compressors	XX	1	1	0	4	0.000	2.40E-03	**0.00E+00**
10	Battery Chargers	XX	1	1	0	15	0.000	1.80E-03	**0.00E+00**
11	Cable Fires caused by welding and cutting (Plant-Wide)	XX	0	1	0	430	0.000	2.00E-03	**0.00E+00**
12	Cable Run	XX	1	1	0	1820	0.000	4.40E-03	**0.00E+00**
13	Dryers	XX	1	1	0	2	0.000	2.60E-03	**0.00E+00**
14	Electric Motors	XX	1	1	0	8	0.000	4.60E-03	**0.00E+00**
15	Electrical Cabinets	XX	1	1	0	530	0.000	4.50E-02	**0.00E+00**
16	High Energy Arcing Faults	XX	1	1	0	77	0.000	1.50E-03	**0.00E+00**
17	Hydrogen Tanks	XX	1	1	0	2	0.000	1.70E-03	**0.00E+00**
18	Junction Boxes	XX	1	1	0	1820	0.000	1.90E-03	**0.00E+00**
19	Misc. Hydrogen Fires	XX	1	1	0	0	0.000	2.50E-03	**0.00E+00**
20	Off-gas/H2 Recombiner (BWR)	XX	1	1	0	2	0.000	4.40E-02	**0.00E+00**
21	Pumps	XX	1	1	0	43	0.000	2.10E-02	**0.00E+00**
22	RPS MG Sets	XX	0	1	0	0	0.000	1.60E-03	**0.00E+00**
23a	Transformers (oil filled)	XX	1	1	0	0	0.000	9.90E-03	**0.00E+00**
23b	Transformers (dry)	XX	1	1	0	67	0.000	9.90E-03	**0.00E+00**
24	Transient fires caused by welding and cutting (Plant-Wide)	XX	0	1	0	78	0.000	4.90E-03	**0.00E+00**
25	Transients (Plant-Wide)	XX	0	1	0	78	0.000	9.90E-03	**0.00E+00**
26	Ventilation Subsystems	XX	1	1	0	26	0.000	7.40E-03	**0.00E+00**
27	Transformer - Catastrophic	TY	0	1	0	9	0.000	6.00E-03	**0.00E+00**
28	Transformer - Non Catastrophic	TY	0	1	0	8	0.000	1.20E-02	**0.00E+00**
29	Yard Transformers (others)	TY	0	1	0	1	0.000	2.20E-03	**0.00E+00**
30	Boiler	TB	0	1	0	2	0.000	1.10E-03	**0.00E+00**
31	Cable Fires caused by welding and cutting (Turbine Building)	TB	0	1	0	224	0.000	1.60E-03	**0.00E+00**
32	Main Feedwater Pumps	TB	1	1	0	8	0.000	1.30E-02	**0.00E+00**
33	Turbine Generator Excitor	TB	0	1	0	1	0.000	3.90E-03	**0.00E+00**
34	Turbine Generator Hydrogen	TB	0	1	0	1	0.000	6.50E-03	**0.00E+00**
35	Turbine Generator Oil	TB	0	1	0	1	0.000	9.50E-03	**0.00E+00**
36	Transient fires caused by welding and cutting (Turbine Building)	TB	0	1	0	17	0.000	8.20E-03	**0.00E+00**
37	Transients (Turbine Building)	TB	0	1	0	17	0.000	8.50E-03	**0.00E+00**
Compartment Fire Frequency (FL)			**2.57E-04**						
Notes:									
(A) Number of Ignition Sources in Compartment									
(B) Total Number of Ignition Sources in Selected Plant Location or in Plant for Plant Wide Components									
*Ignition Source Frequency: FIF = WFL*WFIS*FF*									
Compartment Fire Frequency: FL = SUM(FIF)									

Table 12A-4

F1140 - Fire Compartment Ignition Source Data Sheet (ISDS)

Compartment Description									
	Fire Area		Fire Area F1140						
	Fire Compartment		F1140	HCU D					
Compartment Fire Ignition Frequency									
Step 1.1	Plant Location ID		CAR						
	Plant Location Description		Control/Auxiliary/Reactor Building						
Step 1.2	Location Weighting Factor (WFL)		1.00E+00	Plant Location					
	Location Weighting Factor (WFL)		1.00E+00	Plant Wide Components					
Compartment Ignition Sources		Plant	App. to	Weighting	Sources in	Sources in	Weighting	Fire	**Ignition Source**
(FIF)		Location	This Area	Factor	Compartment	Plant Location	Factor	Frequency	**Frequency**
Bin #	Ignition Source	L	APP	WFL	(A)	(B)	WFIS=(A)/(B)	(FF)	**(FIF)**
01	Batteries	BR	1	1	0	21	0.000	7.50E-04	**0.00E+00**
02	Reactor Coolant Pump	COP	0	1	0	0	0.000	6.10E-03	**0.00E+00**
03	Transients and Hotwork	COP	0	1	0	0	0.000	2.00E-03	**0.00E+00**
04	Main Control Board	CR	0	1	0	0	0.000	2.50E-03	**0.00E+00**
05	Cable Fires caused by welding and cutting (Cntrl/Aux/Rx Building)	CAR	1	1	0	1166	0.000	1.60E-03	**0.00E+00**
06	Transient fires caused by welding and cutting (Cntrl/Aux/Rx Building)	CAR	1	1	1	53	0.019	9.70E-03	**1.83E-04**
07	Transients (Cntrl/Aux/Rx Building)	CAR	1	1	1	53	0.019	3.90E-03	**7.36E-05**
08	Diesel Generators	DGR	1	1	0	4	0.000	2.10E-02	**0.00E+00**
09	Air Compressors	XX	1	1	0	4	0.000	2.40E-03	**0.00E+00**
10	Battery Chargers	XX	1	1	0	15	0.000	1.80E-03	**0.00E+00**
11	Cable Fires caused by welding and cutting (Plant-Wide)	XX	0	1	0	430	0.000	2.00E-03	**0.00E+00**
12	Cable Run	XX	1	1	0	1820	0.000	4.40E-03	**0.00E+00**
13	Dryers	XX	1	1	0	2	0.000	2.60E-03	**0.00E+00**
14	Electric Motors	XX	1	1	0	8	0.000	4.60E-03	**0.00E+00**
15	Electrical Cabinets	XX	1	1	0	530	0.000	4.50E-02	**0.00E+00**
16	High Energy Arcing Faults	XX	1	1	0	77	0.000	1.50E-03	**0.00E+00**
17	Hydrogen Tanks	XX	1	1	0	2	0.000	1.70E-03	**0.00E+00**
18	Junction Boxes	XX	1	1	0	1820	0.000	1.90E-03	**0.00E+00**
19	Misc. Hydrogen Fires	XX	1	1	0	0	0.000	2.50E-03	**0.00E+00**
20	Off-gas/H2 Recombiner (BWR)	XX	1	1	0	2	0.000	4.40E-02	**0.00E+00**
21	Pumps	XX	1	1	0	43	0.000	2.10E-02	**0.00E+00**
22	RPS MG Sets	XX	0	1	0	0	0.000	1.60E-03	**0.00E+00**
23a	Transformers (oil filled)	XX	1	1	0	0	0.000	9.90E-03	**0.00E+00**
23b	Transformers (dry)	XX	1	1	0	67	0.000	9.90E-03	**0.00E+00**
24	Transient fires caused by welding and cutting (Plant-Wide)	XX	0	1	0	78	0.000	4.90E-03	**0.00E+00**
25	Transients (Plant-Wide)	XX	0	1	0	78	0.000	9.90E-03	**0.00E+00**
26	Ventilation Subsystems	XX	1	1	0	26	0.000	7.40E-03	**0.00E+00**
27	Transformer - Catastrophic	TY	0	1	0	9	0.000	6.00E-03	**0.00E+00**
28	Transformer - Non Catastrophic	TY	0	1	0	8	0.000	1.20E-02	**0.00E+00**
29	Yard Transformers (others)	TY	0	1	0	1	0.000	2.20E-03	**0.00E+00**
30	Boiler	TB	0	1	0	2	0.000	1.10E-03	**0.00E+00**
31	Cable Fires caused by welding and cutting (Turbine Building)	TB	0	1	0	224	0.000	1.60E-03	**0.00E+00**
32	Main Feedwater Pumps	TB	1	1	0	8	0.000	1.30E-02	**0.00E+00**
33	Turbine Generator Excitor	TB	0	1	0	1	0.000	3.90E-03	**0.00E+00**
34	Turbine Generator Hydrogen	TB	0	1	0	1	0.000	6.50E-03	**0.00E+00**
35	Turbine Generator Oil	TB	0	1	0	1	0.000	9.50E-03	**0.00E+00**
36	Transient fires caused by welding and cutting (Turbine Building)	TB	0	1	0	17	0.000	8.20E-03	**0.00E+00**
37	Transients (Turbine Building)	TB	0	1	0	17	0.000	8.50E-03	**0.00E+00**
Compartment Fire Frequency (FL)			**2.57E-04**						
Notes:									
(A) Number of Ignition Sources in Compartment									
(B) Total Number of Ignition Sources in Selected Plant Location or in Plant for Plant Wide Components									
*Ignition Source Frequency: FIF = WFL*WFIS*FF*									
Compartment Fire Frequency: FL = SUM(FIF)									

Table 12A-5

F1150 - Fire Compartment Ignition Source Data Sheet (ISDS)

Compartment Description									
	Fire Area		Fire Area F1150						
	Fire Compartment		F1150	Nonsafety NW quadrant					
Compartment Fire Ignition Frequency									
Step 1.1	Plant Location ID		CAR						
	Plant Location Description		Control/Auxiliary/Reactor Building						
Step 1.2	Location Weighting Factor (WFL)		1.00E+00	Plant Location					
	Location Weighting Factor (WFL)		1.00E+00	Plant Wide Components					
Compartment Ignition Sources		Plant	App. to	Weighting	Sources in	Sources in	Weighting	Fire	**Ignition Source**
(FIF)		Location	This Area	Factor	Compartment	Plant Location	Factor	Frequency	**Frequency**
Bin #	Ignition Source	L	APP	WFL	(A)	(B)	WFIS=(A)/(B)	(FF)	**(FIF)**
01	Batteries	BR	1	1	0	21	0.000	7.50E-04	**0.00E+00**
02	Reactor Coolant Pump	COP	0	1	0	0	0.000	6.10E-03	**0.00E+00**
03	Transients and Hotwork	COP	0	1	0	0	0.000	2.00E-03	**0.00E+00**
04	Main Control Board	CR	0	1	0	0	0.000	2.50E-03	**0.00E+00**
05	Cable Fires caused by welding and cutting (Cntrl/Aux/Rx Building)	CAR	1	1	76	1166	0.065	1.60E-03	**1.04E-04**
06	Transient fires caused by welding and cutting (Cntrl/Aux/Rx Building)	CAR	1	1	1	53	0.019	9.70E-03	**1.83E-04**
07	Transients (Cntrl/Aux/Rx Building)	CAR	1	1	1	53	0.019	3.90E-03	**7.36E-05**
08	Diesel Generators	DGR	1	1	0	4	0.000	2.10E-02	**0.00E+00**
09	Air Compressors	XX	1	1	0	4	0.000	2.40E-03	**0.00E+00**
10	Battery Chargers	XX	1	1	0	15	0.000	1.80E-03	**0.00E+00**
11	Cable Fires caused by welding and cutting (Plant-Wide)	XX	0	1	0	430	0.000	2.00E-03	**0.00E+00**
12	Cable Run	XX	1	1	76	1820	0.042	4.40E-03	**1.84E-04**
13	Dryers	XX	1	1	0	2	0.000	2.60E-03	**0.00E+00**
14	Electric Motors	XX	1	1	0	8	0.000	4.60E-03	**0.00E+00**
15	Electrical Cabinets	XX	1	1	18	530	0.034	4.50E-02	**1.53E-03**
16	High Energy Arcing Faults	XX	1	1	4	77	0.052	1.50E-03	**7.79E-05**
17	Hydrogen Tanks	XX	1	1	0	2	0.000	1.70E-03	**0.00E+00**
18	Junction Boxes	XX	1	1	76	1820	0.042	1.90E-03	**7.93E-05**
19	Misc. Hydrogen Fires	XX	1	1	0	0	0.000	2.50E-03	**0.00E+00**
20	Off-gas/H2 Recombiner (BWR)	XX	1	1	0	2	0.000	4.40E-02	**0.00E+00**
21	Pumps	XX	1	1	0	43	0.000	2.10E-02	**0.00E+00**
22	RPS MG Sets	XX	0	1	0	0	0.000	1.60E-03	**0.00E+00**
23a	Transformers (oil filled)	XX	1	1	0	0	0.000	9.90E-03	**0.00E+00**
23b	Transformers (dry)	XX	1	1	6	67	0.090	9.90E-03	**8.87E-04**
24	Transient fires caused by welding and cutting (Plant-Wide)	XX	0	1	0	78	0.000	4.90E-03	**0.00E+00**
25	Transients (Plant-Wide)	XX	0	1	0	78	0.000	9.90E-03	**0.00E+00**
26	Ventilation Subsystems	XX	1	1	0	26	0.000	7.40E-03	**0.00E+00**
27	Transformer - Catastrophic	TY	0	1	0	9	0.000	6.00E-03	**0.00E+00**
28	Transformer - Non Catastrophic	TY	0	1	0	8	0.000	1.20E-02	**0.00E+00**
29	Yard Transformers (others)	TY	0	1	0	1	0.000	2.20E-03	**0.00E+00**
30	Boiler	TB	0	1	0	2	0.000	1.10E-03	**0.00E+00**
31	Cable Fires caused by welding and cutting (Turbine Building)	TB	0	1	0	224	0.000	1.60E-03	**0.00E+00**
32	Main Feedwater Pumps	TB	1	1	0	8	0.000	1.30E-02	**0.00E+00**
33	Turbine Generator Excitor	TB	0	1	0	1	0.000	3.90E-03	**0.00E+00**
34	Turbine Generator Hydrogen	TB	0	1	0	1	0.000	6.50E-03	**0.00E+00**
35	Turbine Generator Oil	TB	0	1	0	1	0.000	9.50E-03	**0.00E+00**
36	Transient fires caused by welding and cutting (Turbine Building)	TB	0	1	0	17	0.000	8.20E-03	**0.00E+00**
37	Transients (Turbine Building)	TB	0	1	0	17	0.000	8.50E-03	**0.00E+00**
Compartment Fire Frequency (FL)			**3.12E-03**						
Notes:									
(A) Number of Ignition Sources in Compartment									
(B) Total Number of Ignition Sources in Selected Plant Location or in Plant for Plant Wide Components									
*Ignition Source Frequency: FIF = WFL*WFIS*FF*									
Compartment Fire Frequency: FL = SUM(FIF)									

Table 12A-6

F1152 - Fire Compartment Ignition Source Data Sheet (ISDS)

Compartment Description									
	Fire Area		Fire Area F1152						
	Fire Compartment		F1152	Nonsafety NE quadrant					
Compartment Fire Ignition Frequency									
Step 1.1	Plant Location ID		CAR						
	Plant Location Description		Control/Auxiliary/Reactor Building						
Step 1.2	Location Weighting Factor (WFL)		1.00E+00	Plant Location					
	Location Weighting Factor (WFL)		1.00E+00	Plant Wide Components					
Compartment Ignition Sources		Plant	App. to	Weighting	Sources in	Sources in	Weighting	Fire	**Ignition Source**
(FIF)		Location	This Area	Factor	Compartment	Plant Location	Factor	Frequency	**Frequency**
Bin #	Ignition Source	L	APP	WFL	(A)	(B)	WFIS=(A)/(B)	(FF)	**(FIF)**
01	Batteries	BR	1	1	0	21	0.000	7.50E-04	**0.00E+00**
02	Reactor Coolant Pump	COP	0	1	0	0	0.000	6.10E-03	**0.00E+00**
03	Transients and Hotwork	COP	0	1	0	0	0.000	2.00E-03	**0.00E+00**
04	Main Control Board	CR	0	1	0	0	0.000	2.50E-03	**0.00E+00**
05	Cable Fires caused by welding and cutting (Cntrl/Aux/Rx Building)	CAR	1	1	108	1166	0.093	1.60E-03	**1.48E-04**
06	Transient fires caused by welding and cutting (Cntrl/Aux/Rx Building)	CAR	1	1	1	53	0.019	9.70E-03	**1.83E-04**
07	Transients (Cntrl/Aux/Rx Building)	CAR	1	1	1	53	0.019	3.90E-03	**7.36E-05**
08	Diesel Generators	DGR	1	1	0	4	0.000	2.10E-02	**0.00E+00**
09	Air Compressors	XX	1	1	0	4	0.000	2.40E-03	**0.00E+00**
10	Battery Chargers	XX	1	1	0	15	0.000	1.80E-03	**0.00E+00**
11	Cable Fires caused by welding and cutting (Plant-Wide)	XX	0	1	0	430	0.000	2.00E-03	**0.00E+00**
12	Cable Run	XX	1	1	108	1820	0.059	4.40E-03	**2.61E-04**
13	Dryers	XX	1	1	0	2	0.000	2.60E-03	**0.00E+00**
14	Electric Motors	XX	1	1	0	8	0.000	4.60E-03	**0.00E+00**
15	Electrical Cabinets	XX	1	1	20	530	0.038	4.50E-02	**1.70E-03**
16	High Energy Arcing Faults	XX	1	1	5	77	0.065	1.50E-03	**9.74E-05**
17	Hydrogen Tanks	XX	1	1	0	2	0.000	1.70E-03	**0.00E+00**
18	Junction Boxes	XX	1	1	108	1820	0.059	1.90E-03	**1.13E-04**
19	Misc. Hydrogen Fires	XX	1	1	0	0	0.000	2.50E-03	**0.00E+00**
20	Off-gas/H2 Recombiner (BWR)	XX	1	1	0	2	0.000	4.40E-02	**0.00E+00**
21	Pumps	XX	1	1	1	43	0.023	2.10E-02	**4.88E-04**
22	RPS MG Sets	XX	0	1	0	0	0.000	1.60E-03	**0.00E+00**
23a	Transformers (oil filled)	XX	1	1	0	0	0.000	9.90E-03	**0.00E+00**
23b	Transformers (dry)	XX	1	1	7	67	0.104	9.90E-03	**1.03E-03**
24	Transient fires caused by welding and cutting (Plant-Wide)	XX	0	1	0	78	0.000	4.90E-03	**0.00E+00**
25	Transients (Plant-Wide)	XX	0	1	0	78	0.000	9.90E-03	**0.00E+00**
26	Ventilation Subsystems	XX	1	1	0	26	0.000	7.40E-03	**0.00E+00**
27	Transformer - Catastrophic	TY	0	1	0	9	0.000	6.00E-03	**0.00E+00**
28	Transformer - Non Catastrophic	TY	0	1	0	8	0.000	1.20E-02	**0.00E+00**
29	Yard Transformers (others)	TY	0	1	0	1	0.000	2.20E-03	**0.00E+00**
30	Boiler	TB	0	1	0	2	0.000	1.10E-03	**0.00E+00**
31	Cable Fires caused by welding and cutting (Turbine Building)	TB	0	1	0	224	0.000	1.60E-03	**0.00E+00**
32	Main Feedwater Pumps	TB	1	1	0	8	0.000	1.30E-02	**0.00E+00**
33	Turbine Generator Excitor	TB	0	1	0	1	0.000	3.90E-03	**0.00E+00**
34	Turbine Generator Hydrogen	TB	0	1	0	1	0.000	6.50E-03	**0.00E+00**
35	Turbine Generator Oil	TB	0	1	0	1	0.000	9.50E-03	**0.00E+00**
36	Transient fires caused by welding and cutting (Turbine Building)	TB	0	1	0	17	0.000	8.20E-03	**0.00E+00**
37	Transients (Turbine Building)	TB	0	1	0	17	0.000	8.50E-03	**0.00E+00**
Compartment Fire Frequency (FL)			**4.10E-03**						
Notes:									
(A) Number of Ignition Sources in Compartment									
(B) Total Number of Ignition Sources in Selected Plant Location or in Plant for Plant Wide Components									
*Ignition Source Frequency: FIF = WFL*WFIS*FF*									
Compartment Fire Frequency: FL = SUM(FIF)									

Table 12A-7

F1160 - Fire Compartment Ignition Source Data Sheet (ISDS)

Compartment Description									
	Fire Area		Fire Area F1160						
	Fire Compartment		F1160	Nonsafety SW quadrant					
Compartment Fire Ignition Frequency									
Step 1.1	Plant Location ID		CAR						
	Plant Location Description		Control/Auxiliary/Reactor Building						
Step 1.2	Location Weighting Factor (WFL)		1.00E+00	Plant Location					
	Location Weighting Factor (WFL)		1.00E+00	Plant Wide Components					
Compartment Ignition Sources		Plant	App. to	Weighting	Sources in	Sources in	Weighting	Fire	**Ignition Source**
(FIF)		Location	This Area	Factor	Compartment	Plant Location	Factor	Frequency	**Frequency**
Bin #	Ignition Source	L	APP	WFL	(A)	(B)	WFIS=(A)/(B)	(FF)	**(FIF)**
01	Batteries	BR	1	1	0	21	0.000	7.50E-04	**0.00E+00**
02	Reactor Coolant Pump	COP	0	1	0	0	0.000	6.10E-03	**0.00E+00**
03	Transients and Hotwork	COP	0	1	0	0	0.000	2.00E-03	**0.00E+00**
04	Main Control Board	CR	0	1	0	0	0.000	2.50E-03	**0.00E+00**
05	Cable Fires caused by welding and cutting (Cntrl/Aux/Rx Building)	CAR	1	1	47	1166	0.040	1.60E-03	**6.45E-05**
06	Transient fires caused by welding and cutting (Cntrl/Aux/Rx Building)	CAR	1	1	1	53	0.019	9.70E-03	**1.83E-04**
07	Transients (Cntrl/Aux/Rx Building)	CAR	1	1	1	53	0.019	3.90E-03	**7.36E-05**
08	Diesel Generators	DGR	1	1	0	4	0.000	2.10E-02	**0.00E+00**
09	Air Compressors	XX	1	1	0	4	0.000	2.40E-03	**0.00E+00**
10	Battery Chargers	XX	1	1	0	15	0.000	1.80E-03	**0.00E+00**
11	Cable Fires caused by welding and cutting (Plant-Wide)	XX	0	1	0	430	0.000	2.00E-03	**0.00E+00**
12	Cable Run	XX	1	1	47	1820	0.026	4.40E-03	**1.14E-04**
13	Dryers	XX	1	1	0	2	0.000	2.60E-03	**0.00E+00**
14	Electric Motors	XX	1	1	0	8	0.000	4.60E-03	**0.00E+00**
15	Electrical Cabinets	XX	1	1	13	530	0.025	4.50E-02	**1.10E-03**
16	High Energy Arcing Faults	XX	1	1	4	77	0.052	1.50E-03	**7.79E-05**
17	Hydrogen Tanks	XX	1	1	0	2	0.000	1.70E-03	**0.00E+00**
18	Junction Boxes	XX	1	1	47	1820	0.026	1.90E-03	**4.91E-05**
19	Misc. Hydrogen Fires	XX	1	1	0	0	0.000	2.50E-03	**0.00E+00**
20	Off-gas/H2 Recombiner (BWR)	XX	1	1	0	2	0.000	4.40E-02	**0.00E+00**
21	Pumps	XX	1	1	0	43	0.000	2.10E-02	**0.00E+00**
22	RPS MG Sets	XX	0	1	0	0	0.000	1.60E-03	**0.00E+00**
23a	Transformers (oil filled)	XX	1	1	0	0	0.000	9.90E-03	**0.00E+00**
23b	Transformers (dry)	XX	1	1	6	67	0.090	9.90E-03	**8.87E-04**
24	Transient fires caused by welding and cutting (Plant-Wide)	XX	0	1	0	78	0.000	4.90E-03	**0.00E+00**
25	Transients (Plant-Wide)	XX	0	1	0	78	0.000	9.90E-03	**0.00E+00**
26	Ventilation Subsystems	XX	1	1	0	26	0.000	7.40E-03	**0.00E+00**
27	Transformer - Catastrophic	TY	0	1	0	9	0.000	6.00E-03	**0.00E+00**
28	Transformer - Non Catastrophic	TY	0	1	0	8	0.000	1.20E-02	**0.00E+00**
29	Yard Transformers (others)	TY	0	1	0	1	0.000	2.20E-03	**0.00E+00**
30	Boiler	TB	0	1	0	2	0.000	1.10E-03	**0.00E+00**
31	Cable Fires caused by welding and cutting (Turbine Building)	TB	0	1	0	224	0.000	1.60E-03	**0.00E+00**
32	Main Feedwater Pumps	TB	1	1	0	8	0.000	1.30E-02	**0.00E+00**
33	Turbine Generator Excitor	TB	0	1	0	1	0.000	3.90E-03	**0.00E+00**
34	Turbine Generator Hydrogen	TB	0	1	0	1	0.000	6.50E-03	**0.00E+00**
35	Turbine Generator Oil	TB	0	1	0	1	0.000	9.50E-03	**0.00E+00**
36	Transient fires caused by welding and cutting (Turbine Building)	TB	0	1	0	17	0.000	8.20E-03	**0.00E+00**
37	Transients (Turbine Building)	TB	0	1	0	17	0.000	8.50E-03	**0.00E+00**
Compartment Fire Frequency (FL)			**2.55E-03**						
Notes:									
(A) Number of Ignition Sources in Compartment									
(B) Total Number of Ignition Sources in Selected Plant Location or in Plant for Plant Wide Components									
*Ignition Source Frequency: FIF = WFL*WFIS*FF*									
Compartment Fire Frequency: FL = SUM(FIF)									

Table 12A-8

F1162 - Fire Compartment Ignition Source Data Sheet (ISDS)

Compartment Description									
	Fire Area		Fire Area F1162						
	Fire Compartment		F1162	Nonsafety SE quadrant					
Compartment Fire Ignition Frequency									
Step 1.1	Plant Location ID		CAR						
	Plant Location Description		Control/Auxiliary/Reactor Building						
Step 1.2	Location Weighting Factor (WFL)		1.00E+00	Plant Location					
	Location Weighting Factor (WFL)		1.00E+00	Plant Wide Components					
Compartment Ignition Sources		Plant	App. to	Weighting	Sources in	Sources in	Weighting	Fire	**Ignition Source**
(FIF)		Location	This Area	Factor	Compartment	Plant Location	Factor	Frequency	**Frequency**
Bin #	Ignition Source	L	APP	WFL	(A)	(B)	WFIS=(A)/(B)	(FF)	**(FIF)**
01	Batteries	BR	1	1	0	21	0.000	7.50E-04	**0.00E+00**
02	Reactor Coolant Pump	COP	0	1	0	0	0.000	6.10E-03	**0.00E+00**
03	Transients and Hotwork	COP	0	1	0	0	0.000	2.00E-03	**0.00E+00**
04	Main Control Board	CR	0	1	0	0	0.000	2.50E-03	**0.00E+00**
05	Cable Fires caused by welding and cutting (Cntrl/Aux/Rx Building)	CAR	1	1	123	1166	0.105	1.60E-03	**1.69E-04**
06	Transient fires caused by welding and cutting (Cntrl/Aux/Rx Building)	CAR	1	1	1	53	0.019	9.70E-03	**1.83E-04**
07	Transients (Cntrl/Aux/Rx Building)	CAR	1	1	1	53	0.019	3.90E-03	**7.36E-05**
08	Diesel Generators	DGR	1	1	0	4	0.000	2.10E-02	**0.00E+00**
09	Air Compressors	XX	1	1	0	4	0.000	2.40E-03	**0.00E+00**
10	Battery Chargers	XX	1	1	0	15	0.000	1.80E-03	**0.00E+00**
11	Cable Fires caused by welding and cutting (Plant-Wide)	XX	0	1	0	430	0.000	2.00E-03	**0.00E+00**
12	Cable Run	XX	1	1	123	1820	0.068	4.40E-03	**2.97E-04**
13	Dryers	XX	1	1	0	2	0.000	2.60E-03	**0.00E+00**
14	Electric Motors	XX	1	1	0	8	0.000	4.60E-03	**0.00E+00**
15	Electrical Cabinets	XX	1	1	19	530	0.036	4.50E-02	**1.61E-03**
16	High Energy Arcing Faults	XX	1	1	4	77	0.052	1.50E-03	**7.79E-05**
17	Hydrogen Tanks	XX	1	1	0	2	0.000	1.70E-03	**0.00E+00**
18	Junction Boxes	XX	1	1	123	1820	0.068	1.90E-03	**1.28E-04**
19	Misc. Hydrogen Fires	XX	1	1	0	0	0.000	2.50E-03	**0.00E+00**
20	Off-gas/H2 Recombiner (BWR)	XX	1	1	0	2	0.000	4.40E-02	**0.00E+00**
21	Pumps	XX	1	1	1	43	0.023	2.10E-02	**4.88E-04**
22	RPS MG Sets	XX	0	1	0	0	0.000	1.60E-03	**0.00E+00**
23a	Transformers (oil filled)	XX	1	1	0	0	0.000	9.90E-03	**0.00E+00**
23b	Transformers (dry)	XX	1	1	5	67	0.075	9.90E-03	**7.39E-04**
24	Transient fires caused by welding and cutting (Plant-Wide)	XX	0	1	0	78	0.000	4.90E-03	**0.00E+00**
25	Transients (Plant-Wide)	XX	0	1	0	78	0.000	9.90E-03	**0.00E+00**
26	Ventilation Subsystems	XX	1	1	0	26	0.000	7.40E-03	**0.00E+00**
27	Transformer - Catastrophic	TY	0	1	0	9	0.000	6.00E-03	**0.00E+00**
28	Transformer - Non Catastrophic	TY	0	1	0	8	0.000	1.20E-02	**0.00E+00**
29	Yard Transformers (others)	TY	0	1	0	1	0.000	2.20E-03	**0.00E+00**
30	Boiler	TB	0	1	0	2	0.000	1.10E-03	**0.00E+00**
31	Cable Fires caused by welding and cutting (Turbine Building)	TB	0	1	0	224	0.000	1.60E-03	**0.00E+00**
32	Main Feedwater Pumps	TB	1	1	0	8	0.000	1.30E-02	**0.00E+00**
33	Turbine Generator Excitor	TB	0	1	0	1	0.000	3.90E-03	**0.00E+00**
34	Turbine Generator Hydrogen	TB	0	1	0	1	0.000	6.50E-03	**0.00E+00**
35	Turbine Generator Oil	TB	0	1	0	1	0.000	9.50E-03	**0.00E+00**
36	Transient fires caused by welding and cutting (Turbine Building)	TB	0	1	0	17	0.000	8.20E-03	**0.00E+00**
37	Transients (Turbine Building)	TB	0	1	0	17	0.000	8.50E-03	**0.00E+00**
Compartment Fire Frequency (FL)			**3.77E-03**						
Notes:									
(A) Number of Ignition Sources in Compartment									
(B) Total Number of Ignition Sources in Selected Plant Location or in Plant for Plant Wide Components									
*Ignition Source Frequency: FIF = WFL*WFIS*FF*									
Compartment Fire Frequency: FL = SUM(FIF)									

Table 12A-9

F1170 - Fire Compartment Ignition Source Data Sheet (ISDS)

Compartment Description									
	Fire Area		Fire Area F1170						
	Fire Compartment		F1170	Drywell and Containment					
Compartment Fire Ignition Frequency									
Step 1.1	Plant Location ID		CAR						
	Plant Location Description		Control/Auxiliary/Reactor Building						
Step 1.2	Location Weighting Factor (WFL)		1.00E+00	Plant Location					
	Location Weighting Factor (WFL)		1.00E+00	Plant Wide Components					
Compartment Ignition Sources		Plant	App. to	Weighting	Sources in	Sources in	Weighting	Fire	**Ignition Source**
(FIF)		Location	This Area	Factor	Compartment	Plant Location	Factor	Frequency	**Frequency**
Bin #	Ignition Source	L	APP	WFL	(A)	(B)	WFIS=(A)/(B)	(FF)	**(FIF)**
01	Batteries	BR	1	1	0	21	0.000	7.50E-04	**0.00E+00**
02	Reactor Coolant Pump	COP	0	1	0	0	0.000	6.10E-03	**0.00E+00**
03	Transients and Hotwork	COP	0	1	0	0	0.000	2.00E-03	**0.00E+00**
04	Main Control Board	CR	0	1	0	0	0.000	2.50E-03	**0.00E+00**
05	Cable Fires caused by welding and cutting (Cntrl/Aux/Rx Building)	CAR	1	1	16	1166	0.014	1.60E-03	**2.20E-05**
06	Transient fires caused by welding and cutting (Cntrl/Aux/Rx Building)	CAR	1	1	1	53	0.019	9.70E-03	**1.83E-04**
07	Transients (Cntrl/Aux/Rx Building)	CAR	1	1	1	53	0.019	3.90E-03	**7.36E-05**
08	Diesel Generators	DGR	1	1	0	4	0.000	2.10E-02	**0.00E+00**
09	Air Compressors	XX	1	1	0	4	0.000	2.40E-03	**0.00E+00**
10	Battery Chargers	XX	1	1	0	15	0.000	1.80E-03	**0.00E+00**
11	Cable Fires caused by welding and cutting (Plant-Wide)	XX	0	1	0	430	0.000	2.00E-03	**0.00E+00**
12	Cable Run	XX	1	1	16	1820	0.009	4.40E-03	**3.87E-05**
13	Dryers	XX	1	1	0	2	0.000	2.60E-03	**0.00E+00**
14	Electric Motors	XX	1	1	0	8	0.000	4.60E-03	**0.00E+00**
15	Electrical Cabinets	XX	1	1	0	530	0.000	4.50E-02	**0.00E+00**
16	High Energy Arcing Faults	XX	1	1	0	77	0.000	1.50E-03	**0.00E+00**
17	Hydrogen Tanks	XX	1	1	0	2	0.000	1.70E-03	**0.00E+00**
18	Junction Boxes	XX	1	1	16	1820	0.009	1.90E-03	**1.67E-05**
19	Misc. Hydrogen Fires	XX	1	1	0	0	0.000	2.50E-03	**0.00E+00**
20	Off-gas/H2 Recombiner (BWR)	XX	1	1	0	2	0.000	4.40E-02	**0.00E+00**
21	Pumps	XX	1	1	0	43	0.000	2.10E-02	**0.00E+00**
22	RPS MG Sets	XX	0	1	0	0	0.000	1.60E-03	**0.00E+00**
23a	Transformers (oil filled)	XX	1	1	0	0	0.000	9.90E-03	**0.00E+00**
23b	Transformers (dry)	XX	1	1	0	67	0.000	9.90E-03	**0.00E+00**
24	Transient fires caused by welding and cutting (Plant-Wide)	XX	0	1	0	78	0.000	4.90E-03	**0.00E+00**
25	Transients (Plant-Wide)	XX	0	1	0	78	0.000	9.90E-03	**0.00E+00**
26	Ventilation Subsystems	XX	1	1	0	26	0.000	7.40E-03	**0.00E+00**
27	Transformer - Catastrophic	TY	0	1	0	9	0.000	6.00E-03	**0.00E+00**
28	Transformer - Non Catastrophic	TY	0	1	0	8	0.000	1.20E-02	**0.00E+00**
29	Yard Transformers (others)	TY	0	1	0	1	0.000	2.20E-03	**0.00E+00**
30	Boiler	TB	0	1	0	2	0.000	1.10E-03	**0.00E+00**
31	Cable Fires caused by welding and cutting (Turbine Building)	TB	0	1	0	224	0.000	1.60E-03	**0.00E+00**
32	Main Feedwater Pumps	TB	1	1	0	8	0.000	1.30E-02	**0.00E+00**
33	Turbine Generator Excitor	TB	0	1	0	1	0.000	3.90E-03	**0.00E+00**
34	Turbine Generator Hydrogen	TB	0	1	0	1	0.000	6.50E-03	**0.00E+00**
35	Turbine Generator Oil	TB	0	1	0	1	0.000	9.50E-03	**0.00E+00**
36	Transient fires caused by welding and cutting (Turbine Building)	TB	0	1	0	17	0.000	8.20E-03	**0.00E+00**
37	Transients (Turbine Building)	TB	0	1	0	17	0.000	8.50E-03	**0.00E+00**
Compartment Fire Frequency (FL)			**3.34E-04**						
Notes:									
(A) Number of Ignition Sources in Compartment									
(B) Total Number of Ignition Sources in Selected Plant Location or in Plant for Plant Wide Components									
*Ignition Source Frequency: FIF = WFL*WFIS*FF*									
Compartment Fire Frequency: FL = SUM(FIF)									

Table 12A-10

F1203 - Fire Compartment Ignition Source Data Sheet (ISDS)

Compartment Description									
	Fire Area		Fire Area F1203						
	Fire Compartment		F1203	CRD and Containment Access					
Compartment Fire Ignition Frequency									
Step 1.1	Plant Location ID		CAR						
	Plant Location Description		Control/Auxiliary/Reactor Building						
Step 1.2	Location Weighting Factor (WFL)		1.00E+00	Plant Location					
	Location Weighting Factor (WFL)		1.00E+00	Plant Wide Components					
Compartment Ignition Sources		Plant	App. to	Weighting	Sources in	Sources in	Weighting	Fire	**Ignition Source**
(FIF)		Location	This Area	Factor	Compartment	Plant Location	Factor	Frequency	**Frequency**
Bin #	Ignition Source	L	APP	WFL	(A)	(B)	WFIS=(A)/(B)	(FF)	**(FIF)**
01	Batteries	BR	1	1	0	21	0.000	7.50E-04	**0.00E+00**
02	Reactor Coolant Pump	COP	0	1	0	0	0.000	6.10E-03	**0.00E+00**
03	Transients and Hotwork	COP	0	1	0	0	0.000	2.00E-03	**0.00E+00**
04	Main Control Board	CR	0	1	0	0	0.000	2.50E-03	**0.00E+00**
05	Cable Fires caused by welding and cutting (Cntrl/Aux/Rx Building)	CAR	1	1	26	1166	0.022	1.60E-03	**3.57E-05**
06	Transient fires caused by welding and cutting (Cntrl/Aux/Rx Building)	CAR	1	1	1	53	0.019	9.70E-03	**1.83E-04**
07	Transients (Cntrl/Aux/Rx Building)	CAR	1	1	1	53	0.019	3.90E-03	**7.36E-05**
08	Diesel Generators	DGR	1	1	0	4	0.000	2.10E-02	**0.00E+00**
09	Air Compressors	XX	1	1	0	4	0.000	2.40E-03	**0.00E+00**
10	Battery Chargers	XX	1	1	0	15	0.000	1.80E-03	**0.00E+00**
11	Cable Fires caused by welding and cutting (Plant-Wide)	XX	0	1	0	430	0.000	2.00E-03	**0.00E+00**
12	Cable Run	XX	1	1	26	1820	0.014	4.40E-03	**6.29E-05**
13	Dryers	XX	1	1	0	2	0.000	2.60E-03	**0.00E+00**
14	Electric Motors	XX	1	1	0	8	0.000	4.60E-03	**0.00E+00**
15	Electrical Cabinets	XX	1	1	0	530	0.000	4.50E-02	**0.00E+00**
16	High Energy Arcing Faults	XX	1	1	0	77	0.000	1.50E-03	**0.00E+00**
17	Hydrogen Tanks	XX	1	1	0	2	0.000	1.70E-03	**0.00E+00**
18	Junction Boxes	XX	1	1	26	1820	0.014	1.90E-03	**2.71E-05**
19	Misc. Hydrogen Fires	XX	1	1	0	0	0.000	2.50E-03	**0.00E+00**
20	Off-gas/H2 Recombiner (BWR)	XX	1	1	0	2	0.000	4.40E-02	**0.00E+00**
21	Pumps	XX	1	1	4	43	0.093	2.10E-02	**1.95E-03**
22	RPS MG Sets	XX	0	1	0	0	0.000	1.60E-03	**0.00E+00**
23a	Transformers (oil filled)	XX	1	1	0	0	0.000	9.90E-03	**0.00E+00**
23b	Transformers (dry)	XX	1	1	0	67	0.000	9.90E-03	**0.00E+00**
24	Transient fires caused by welding and cutting (Plant-Wide)	XX	0	1	0	78	0.000	4.90E-03	**0.00E+00**
25	Transients (Plant-Wide)	XX	0	1	0	78	0.000	9.90E-03	**0.00E+00**
26	Ventilation Subsystems	XX	1	1	0	26	0.000	7.40E-03	**0.00E+00**
27	Transformer - Catastrophic	TY	0	1	0	9	0.000	6.00E-03	**0.00E+00**
28	Transformer - Non Catastrophic	TY	0	1	0	8	0.000	1.20E-02	**0.00E+00**
29	Yard Transformers (others)	TY	0	1	0	1	0.000	2.20E-03	**0.00E+00**
30	Boiler	TB	0	1	0	2	0.000	1.10E-03	**0.00E+00**
31	Cable Fires caused by welding and cutting (Turbine Building)	TB	0	1	0	224	0.000	1.60E-03	**0.00E+00**
32	Main Feedwater Pumps	TB	1	1	0	8	0.000	1.30E-02	**0.00E+00**
33	Turbine Generator Excitor	TB	0	1	0	1	0.000	3.90E-03	**0.00E+00**
34	Turbine Generator Hydrogen	TB	0	1	0	1	0.000	6.50E-03	**0.00E+00**
35	Turbine Generator Oil	TB	0	1	0	1	0.000	9.50E-03	**0.00E+00**
36	Transient fires caused by welding and cutting (Turbine Building)	TB	0	1	0	17	0.000	8.20E-03	**0.00E+00**
37	Transients (Turbine Building)	TB	0	1	0	17	0.000	8.50E-03	**0.00E+00**
Compartment Fire Frequency (FL)			**2.34E-03**						
Notes:									
(A) Number of Ignition Sources in Compartment									
(B) Total Number of Ignition Sources in Selected Plant Location or in Plant for Plant Wide Components									
*Ignition Source Frequency: FIF = WFL*WFIS*FF*									
Compartment Fire Frequency: FL = SUM(FIF)									

Table 12A-11

F1210 - Fire Compartment Ignition Source Data Sheet (ISDS)

Compartment Description									
	Fire Area		Fire Area F1210						
	Fire Compartment		F1210	Division 1 Battery					
Compartment Fire Ignition Frequency									
Step 1.1	Plant Location ID		CAR						
	Plant Location Description		Control/Auxiliary/Reactor Building						
Step 1.2	Location Weighting Factor (WFL)		1.00E+00	Plant Location					
	Location Weighting Factor (WFL)		1.00E+00	Plant Wide Components					
Compartment Ignition Sources		Plant	App. to	Weighting	Sources in	Sources in	Weighting	Fire	**Ignition Source**
(FIF)		Locatio n	This Area	Factor	Compartment	Plant Location	Factor	Frequency	**Frequency**
Bin #	Ignition Source	L	APP	WFL	(A)	(B)	WFIS=(A)/(B)	(FF)	**(FIF)**
01	Batteries	BR	1	1	4	21	0.190	7.50E-04	**1.43E-04**
02	Reactor Coolant Pump	COP	0	1	0	0	0.000	6.10E-03	**0.00E+00**
03	Transients and Hotwork	COP	0	1	0	0	0.000	2.00E-03	**0.00E+00**
04	Main Control Board	CR	0	1	0	0	0.000	2.50E-03	**0.00E+00**
05	Cable Fires caused by welding and cutting (Cntrl/Aux/Rx Building)	CAR	1	1	7	1166	0.006	1.60E-03	**9.61E-06**
06	Transient fires caused by welding and cutting (Cntrl/Aux/Rx Building)	CAR	1	1	1	53	0.019	9.70E-03	**1.83E-04**
07	Transients (Cntrl/Aux/Rx Building)	CAR	1	1	1	53	0.019	3.90E-03	**7.36E-05**
08	Diesel Generators	DGR	1	1	0	4	0.000	2.10E-02	**0.00E+00**
09	Air Compressors	XX	1	1	0	4	0.000	2.40E-03	**0.00E+00**
10	Battery Chargers	XX	1	1	0	15	0.000	1.80E-03	**0.00E+00**
11	Cable Fires caused by welding and cutting (Plant-Wide)	XX	0	1	0	430	0.000	2.00E-03	**0.00E+00**
12	Cable Run	XX	1	1	7	1820	0.004	4.40E-03	**1.69E-05**
13	Dryers	XX	1	1	0	2	0.000	2.60E-03	**0.00E+00**
14	Electric Motors	XX	1	1	0	8	0.000	4.60E-03	**0.00E+00**
15	Electrical Cabinets	XX	1	1	1	530	0.002	4.50E-02	**8.49E-05**
16	High Energy Arcing Faults	XX	1	1	0	77	0.000	1.50E-03	**0.00E+00**
17	Hydrogen Tanks	XX	1	1	0	2	0.000	1.70E-03	**0.00E+00**
18	Junction Boxes	XX	1	1	7	1820	0.004	1.90E-03	**7.31E-06**
19	Misc. Hydrogen Fires	XX	1	1	0	0	0.000	2.50E-03	**0.00E+00**
20	Off-gas/H2 Recombiner (BWR)	XX	1	1	0	2	0.000	4.40E-02	**0.00E+00**
21	Pumps	XX	1	1	0	43	0.000	2.10E-02	**0.00E+00**
22	RPS MG Sets	XX	0	1	0	0	0.000	1.60E-03	**0.00E+00**
23a	Transformers (oil filled)	XX	1	1	0	0	0.000	9.90E-03	**0.00E+00**
23b	Transformers (dry)	XX	1	1	0	67	0.000	9.90E-03	**0.00E+00**
24	Transient fires caused by welding and cutting (Plant-Wide)	XX	0	1	0	78	0.000	4.90E-03	**0.00E+00**
25	Transients (Plant-Wide)	XX	0	1	0	78	0.000	9.90E-03	**0.00E+00**
26	Ventilation Subsystems	XX	1	1	0	26	0.000	7.40E-03	**0.00E+00**
27	Transformer - Catastrophic	TY	0	1	0	9	0.000	6.00E-03	**0.00E+00**
28	Transformer - Non Catastrophic	TY	0	1	0	8	0.000	1.20E-02	**0.00E+00**
29	Yard Transformers (others)	TY	0	1	0	1	0.000	2.20E-03	**0.00E+00**
30	Boiler	TB	0	1	0	2	0.000	1.10E-03	**0.00E+00**
31	Cable Fires caused by welding and cutting (Turbine Building)	TB	0	1	0	224	0.000	1.60E-03	**0.00E+00**
32	Main Feedwater Pumps	TB	1	1	0	8	0.000	1.30E-02	**0.00E+00**
33	Turbine Generator Excitor	TB	0	1	0	1	0.000	3.90E-03	**0.00E+00**
34	Turbine Generator Hydrogen	TB	0	1	0	1	0.000	6.50E-03	**0.00E+00**
35	Turbine Generator Oil	TB	0	1	0	1	0.000	9.50E-03	**0.00E+00**
36	Transient fires caused by welding and cutting (Turbine Building)	TB	0	1	0	17	0.000	8.20E-03	**0.00E+00**
37	Transients (Turbine Building)	TB	0	1	0	17	0.000	8.50E-03	**0.00E+00**
Compartment Fire Frequency (FL)			**5.18E-04**						
Notes:									
(A) Number of Ignition Sources in Compartment									
(B) Total Number of Ignition Sources in Selected Plant Location or in Plant for Plant Wide Components									
*Ignition Source Frequency: FIF = WFL*WFIS*FF*									
Compartment Fire Frequency: FL = SUM(FIF)									

Table 12A-12

F1220 - Fire Compartment Ignition Source Data Sheet (ISDS)

Compartment Description									
	Fire Area		Fire Area F1220						
	Fire Compartment		F1220	Division 2 Battery					
Compartment Fire Ignition Frequency									
Step 1.1	Plant Location ID		CAR						
	Plant Location Description		Control/Auxiliary/Reactor Building						
Step 1.2	Location Weighting Factor (WFL)		1.00E+00	Plant Location					
	Location Weighting Factor (WFL)		1.00E+00	Plant Wide Components					
Compartment Ignition Sources		Plant	App. to	Weighting	Sources in	Sources in	Weighting	Fire	**Ignition Source**
(FIF)		Location	This Area	Factor	Compartment	Plant Location	Factor	Frequency	**Frequency**
Bin #	Ignition Source	L	APP	WFL	(A)	(B)	WFIS=(A)/(B)	(FF)	**(FIF)**
01	Batteries	BR	1	1	4	21	0.190	7.50E-04	**1.43E-04**
02	Reactor Coolant Pump	COP	0	1	0	0	0.000	6.10E-03	**0.00E+00**
03	Transients and Hotwork	COP	0	1	0	0	0.000	2.00E-03	**0.00E+00**
04	Main Control Board	CR	0	1	0	0	0.000	2.50E-03	**0.00E+00**
05	Cable Fires caused by welding and cutting (Cntrl/Aux/Rx Building)	CAR	1	1	25	1166	0.021	1.60E-03	**3.43E-05**
06	Transient fires caused by welding and cutting (Cntrl/Aux/Rx Building)	CAR	1	1	1	53	0.019	9.70E-03	**1.83E-04**
07	Transients (Cntrl/Aux/Rx Building)	CAR	1	1	1	53	0.019	3.90E-03	**7.36E-05**
08	Diesel Generators	DGR	1	1	0	4	0.000	2.10E-02	**0.00E+00**
09	Air Compressors	XX	1	1	0	4	0.000	2.40E-03	**0.00E+00**
10	Battery Chargers	XX	1	1	0	15	0.000	1.80E-03	**0.00E+00**
11	Cable Fires caused by welding and cutting (Plant-Wide)	XX	0	1	0	430	0.000	2.00E-03	**0.00E+00**
12	Cable Run	XX	1	1	25	1820	0.014	4.40E-03	**6.04E-05**
13	Dryers	XX	1	1	0	2	0.000	2.60E-03	**0.00E+00**
14	Electric Motors	XX	1	1	0	8	0.000	4.60E-03	**0.00E+00**
15	Electrical Cabinets	XX	1	1	1	530	0.002	4.50E-02	**8.49E-05**
16	High Energy Arcing Faults	XX	1	1	0	77	0.000	1.50E-03	**0.00E+00**
17	Hydrogen Tanks	XX	1	1	0	2	0.000	1.70E-03	**0.00E+00**
18	Junction Boxes	XX	1	1	25	1820	0.014	1.90E-03	**2.61E-05**
19	Misc. Hydrogen Fires	XX	1	1	0	0	0.000	2.50E-03	**0.00E+00**
20	Off-gas/H2 Recombiner (BWR)	XX	1	1	0	2	0.000	4.40E-02	**0.00E+00**
21	Pumps	XX	1	1	0	43	0.000	2.10E-02	**0.00E+00**
22	RPS MG Sets	XX	0	1	0	0	0.000	1.60E-03	**0.00E+00**
23a	Transformers (oil filled)	XX	1	1	0	0	0.000	9.90E-03	**0.00E+00**
23b	Transformers (dry)	XX	1	1	0	67	0.000	9.90E-03	**0.00E+00**
24	Transient fires caused by welding and cutting (Plant-Wide)	XX	0	1	0	78	0.000	4.90E-03	**0.00E+00**
25	Transients (Plant-Wide)	XX	0	1	0	78	0.000	9.90E-03	**0.00E+00**
26	Ventilation Subsystems	XX	1	1	0	26	0.000	7.40E-03	**0.00E+00**
27	Transformer - Catastrophic	TY	0	1	0	9	0.000	6.00E-03	**0.00E+00**
28	Transformer - Non Catastrophic	TY	0	1	0	8	0.000	1.20E-02	**0.00E+00**
29	Yard Transformers (others)	TY	0	1	0	1	0.000	2.20E-03	**0.00E+00**
30	Boiler	TB	0	1	0	2	0.000	1.10E-03	**0.00E+00**
31	Cable Fires caused by welding and cutting (Turbine Building)	TB	0	1	0	224	0.000	1.60E-03	**0.00E+00**
32	Main Feedwater Pumps	TB	1	1	0	8	0.000	1.30E-02	**0.00E+00**
33	Turbine Generator Excitor	TB	0	1	0	1	0.000	3.90E-03	**0.00E+00**
34	Turbine Generator Hydrogen	TB	0	1	0	1	0.000	6.50E-03	**0.00E+00**
35	Turbine Generator Oil	TB	0	1	0	1	0.000	9.50E-03	**0.00E+00**
36	Transient fires caused by welding and cutting (Turbine Building)	TB	0	1	0	17	0.000	8.20E-03	**0.00E+00**
37	Transients (Turbine Building)	TB	0	1	0	17	0.000	8.50E-03	**0.00E+00**
Compartment Fire Frequency (FL)			**6.05E-04**						
Notes:									
(A) Number of Ignition Sources in Compartment									
(B) Total Number of Ignition Sources in Selected Plant Location or in Plant for Plant Wide Components									
*Ignition Source Frequency: FIF = WFL*WFIS*FF*									
Compartment Fire Frequency: FL = SUM(FIF)									

Table 12A-13

F1230 - Fire Compartment Ignition Source Data Sheet (ISDS)

Compartment Description									
	Fire Area		Fire Area F1230						
	Fire Compartment		F1230	Division 3 Battery					
Compartment Fire Ignition Frequency									
Step 1.1	Plant Location ID		CAR						
	Plant Location Description		Control/Auxiliary/Reactor Building						
Step 1.2	Location Weighting Factor (WFL)		1.00E+00	Plant Location					
	Location Weighting Factor (WFL)		1.00E+00	Plant Wide Components					
Compartment Ignition Sources		Plant	App. to	Weighting	Sources in	Sources in	Weighting	Fire	**Ignition Source**
(FIF)		Location	This Area	Factor	Compartment	Plant Location	Factor	Frequency	**Frequency**
Bin #	Ignition Source	L	APP	WFL	(A)	(B)	WFIS=(A)/(B)	(FF)	**(FIF)**
01	Batteries	BR	1	1	3	21	0.143	7.50E-04	**1.07E-04**
02	Reactor Coolant Pump	COP	0	1	0	0	0.000	6.10E-03	**0.00E+00**
03	Transients and Hotwork	COP	0	1	0	0	0.000	2.00E-03	**0.00E+00**
04	Main Control Board	CR	0	1	0	0	0.000	2.50E-03	**0.00E+00**
05	Cable Fires caused by welding and cutting (Cntrl/Aux/Rx Building)	CAR	1	1	9	1166	0.008	1.60E-03	**1.23E-05**
06	Transient fires caused by welding and cutting (Cntrl/Aux/Rx Building)	CAR	1	1	1	53	0.019	9.70E-03	**1.83E-04**
07	Transients (Cntrl/Aux/Rx Building)	CAR	1	1	1	53	0.019	3.90E-03	**7.36E-05**
08	Diesel Generators	DGR	1	1	0	4	0.000	2.10E-02	**0.00E+00**
09	Air Compressors	XX	1	1	0	4	0.000	2.40E-03	**0.00E+00**
10	Battery Chargers	XX	1	1	0	15	0.000	1.80E-03	**0.00E+00**
11	Cable Fires caused by welding and cutting (Plant-Wide)	XX	0	1	0	430	0.000	2.00E-03	**0.00E+00**
12	Cable Run	XX	1	1	9	1820	0.005	4.40E-03	**2.18E-05**
13	Dryers	XX	1	1	0	2	0.000	2.60E-03	**0.00E+00**
14	Electric Motors	XX	1	1	0	8	0.000	4.60E-03	**0.00E+00**
15	Electrical Cabinets	XX	1	1	0	530	0.000	4.50E-02	**0.00E+00**
16	High Energy Arcing Faults	XX	1	1	0	77	0.000	1.50E-03	**0.00E+00**
17	Hydrogen Tanks	XX	1	1	0	2	0.000	1.70E-03	**0.00E+00**
18	Junction Boxes	XX	1	1	9	1820	0.005	1.90E-03	**9.40E-06**
19	Misc. Hydrogen Fires	XX	1	1	0	0	0.000	2.50E-03	**0.00E+00**
20	Off-gas/H2 Recombiner (BWR)	XX	1	1	0	2	0.000	4.40E-02	**0.00E+00**
21	Pumps	XX	1	1	0	43	0.000	2.10E-02	**0.00E+00**
22	RPS MG Sets	XX	0	1	0	0	0.000	1.60E-03	**0.00E+00**
23a	Transformers (oil filled)	XX	1	1	0	0	0.000	9.90E-03	**0.00E+00**
23b	Transformers (dry)	XX	1	1	0	67	0.000	9.90E-03	**0.00E+00**
24	Transient fires caused by welding and cutting (Plant-Wide)	XX	0	1	0	78	0.000	4.90E-03	**0.00E+00**
25	Transients (Plant-Wide)	XX	0	1	0	78	0.000	9.90E-03	**0.00E+00**
26	Ventilation Subsystems	XX	1	1	0	26	0.000	7.40E-03	**0.00E+00**
27	Transformer - Catastrophic	TY	0	1	0	9	0.000	6.00E-03	**0.00E+00**
28	Transformer - Non Catastrophic	TY	0	1	0	8	0.000	1.20E-02	**0.00E+00**
29	Yard Transformers (others)	TY	0	1	0	1	0.000	2.20E-03	**0.00E+00**
30	Boiler	TB	0	1	0	2	0.000	1.10E-03	**0.00E+00**
31	Cable Fires caused by welding and cutting (Turbine Building)	TB	0	1	0	224	0.000	1.60E-03	**0.00E+00**
32	Main Feedwater Pumps	TB	1	1	0	8	0.000	1.30E-02	**0.00E+00**
33	Turbine Generator Excitor	TB	0	1	0	1	0.000	3.90E-03	**0.00E+00**
34	Turbine Generator Hydrogen	TB	0	1	0	1	0.000	6.50E-03	**0.00E+00**
35	Turbine Generator Oil	TB	0	1	0	1	0.000	9.50E-03	**0.00E+00**
36	Transient fires caused by welding and cutting (Turbine Building)	TB	0	1	0	17	0.000	8.20E-03	**0.00E+00**
37	Transients (Turbine Building)	TB	0	1	0	17	0.000	8.50E-03	**0.00E+00**
Compartment Fire Frequency (FL)			**4.07E-04**						
Notes:									
(A) Number of Ignition Sources in Compartment									
(B) Total Number of Ignition Sources in Selected Plant Location or in Plant for Plant Wide Components									
*Ignition Source Frequency: FIF = WFL*WFIS*FF*									
Compartment Fire Frequency: FL = SUM(FIF)									

Table 12A-14

F1240 - Fire Compartment Ignition Source Data Sheet (ISDS)

Compartment Description									
	Fire Area		Fire Area F1240						
	Fire Compartment		F1240	Division 4 Battery					
Compartment Fire Ignition Frequency									
Step 1.1	Plant Location ID		CAR						
	Plant Location Description		Control/Auxiliary/Reactor Building						
Step 1.2	Location Weighting Factor (WFL)		1.00E+00	Plant Location					
	Location Weighting Factor (WFL)		1.00E+00	Plant Wide Components					
Compartment Ignition Sources		Plant	App. to	Weighting	Sources in	Sources in	Weighting	Fire	**Ignition Source**
(FIF)		Location	This Area	Factor	Compartment	Plant Location	Factor	Frequency	**Frequency**
Bin #	Ignition Source	L	APP	WFL	(A)	(B)	WFIS=(A)/(B)	(FF)	**(FIF)**
01	Batteries	BR	1	1	3	21	0.143	7.50E-04	**1.07E-04**
02	Reactor Coolant Pump	COP	0	1	0	0	0.000	6.10E-03	**0.00E+00**
03	Transients and Hotwork	COP	0	1	0	0	0.000	2.00E-03	**0.00E+00**
04	Main Control Board	CR	0	1	0	0	0.000	2.50E-03	**0.00E+00**
05	Cable Fires caused by welding and cutting (Cntrl/Aux/Rx Building)	CAR	1	1	9	1166	0.008	1.60E-03	**1.23E-05**
06	Transient fires caused by welding and cutting (Cntrl/Aux/Rx Building)	CAR	1	1	1	53	0.019	9.70E-03	**1.83E-04**
07	Transients (Cntrl/Aux/Rx Building)	CAR	1	1	1	53	0.019	3.90E-03	**7.36E-05**
08	Diesel Generators	DGR	1	1	0	4	0.000	2.10E-02	**0.00E+00**
09	Air Compressors	XX	1	1	0	4	0.000	2.40E-03	**0.00E+00**
10	Battery Chargers	XX	1	1	0	15	0.000	1.80E-03	**0.00E+00**
11	Cable Fires caused by welding and cutting (Plant-Wide)	XX	0	1	0	430	0.000	2.00E-03	**0.00E+00**
12	Cable Run	XX	1	1	9	1820	0.005	4.40E-03	**2.18E-05**
13	Dryers	XX	1	1	0	2	0.000	2.60E-03	**0.00E+00**
14	Electric Motors	XX	1	1	0	8	0.000	4.60E-03	**0.00E+00**
15	Electrical Cabinets	XX	1	1	0	530	0.000	4.50E-02	**0.00E+00**
16	High Energy Arcing Faults	XX	1	1	0	77	0.000	1.50E-03	**0.00E+00**
17	Hydrogen Tanks	XX	1	1	0	2	0.000	1.70E-03	**0.00E+00**
18	Junction Boxes	XX	1	1	9	1820	0.005	1.90E-03	**9.40E-06**
19	Misc. Hydrogen Fires	XX	1	1	0	0	0.000	2.50E-03	**0.00E+00**
20	Off-gas/H2 Recombiner (BWR)	XX	1	1	0	2	0.000	4.40E-02	**0.00E+00**
21	Pumps	XX	1	1	0	43	0.000	2.10E-02	**0.00E+00**
22	RPS MG Sets	XX	0	1	0	0	0.000	1.60E-03	**0.00E+00**
23a	Transformers (oil filled)	XX	1	1	0	0	0.000	9.90E-03	**0.00E+00**
23b	Transformers (dry)	XX	1	1	0	67	0.000	9.90E-03	**0.00E+00**
24	Transient fires caused by welding and cutting (Plant-Wide)	XX	0	1	0	78	0.000	4.90E-03	**0.00E+00**
25	Transients (Plant-Wide)	XX	0	1	0	78	0.000	9.90E-03	**0.00E+00**
26	Ventilation Subsystems	XX	1	1	0	26	0.000	7.40E-03	**0.00E+00**
27	Transformer - Catastrophic	TY	0	1	0	9	0.000	6.00E-03	**0.00E+00**
28	Transformer - Non Catastrophic	TY	0	1	0	8	0.000	1.20E-02	**0.00E+00**
29	Yard Transformers (others)	TY	0	1	0	1	0.000	2.20E-03	**0.00E+00**
30	Boiler	TB	0	1	0	2	0.000	1.10E-03	**0.00E+00**
31	Cable Fires caused by welding and cutting (Turbine Building)	TB	0	1	0	224	0.000	1.60E-03	**0.00E+00**
32	Main Feedwater Pumps	TB	1	1	0	8	0.000	1.30E-02	**0.00E+00**
33	Turbine Generator Excitor	TB	0	1	0	1	0.000	3.90E-03	**0.00E+00**
34	Turbine Generator Hydrogen	TB	0	1	0	1	0.000	6.50E-03	**0.00E+00**
35	Turbine Generator Oil	TB	0	1	0	1	0.000	9.50E-03	**0.00E+00**
36	Transient fires caused by welding and cutting (Turbine Building)	TB	0	1	0	17	0.000	8.20E-03	**0.00E+00**
37	Transients (Turbine Building)	TB	0	1	0	17	0.000	8.50E-03	**0.00E+00**
Compartment Fire Frequency (FL)			**4.07E-04**						
Notes:									
(A) Number of Ignition Sources in Compartment									
(B) Total Number of Ignition Sources in Selected Plant Location or in Plant for Plant Wide Components									
*Ignition Source Frequency: FIF = WFL*WFIS*FF*									
Compartment Fire Frequency: FL = SUM(FIF)									

Table 12A-15

F1262 - Fire Compartment Ignition Source Data Sheet (ISDS)

Compartment Description									
	Fire Area		Fire Area F1262						
	Fire Compartment		F1262	B Demineralizers					
Compartment Fire Ignition Frequency									
Step 1.1	Plant Location ID		CAR						
	Plant Location Description		Control/Auxiliary/Reactor Building						
Step 1.2	Location Weighting Factor (WFL)		1.00E+00	Plant Location					
	Location Weighting Factor (WFL)		1.00E+00	Plant Wide Components					
Compartment Ignition Sources		Plant	App. to	Weighting	Sources in	Sources in	Weighting	Fire	**Ignition Source**
(FIF)		Location	This Area	Factor	Compartment	Plant Location	Factor	Frequency	**Frequency**
Bin #	Ignition Source	L	APP	WFL	(A)	(B)	WFIS=(A)/(B)	(FF)	**(FIF)**
01	Batteries	BR	1	1	0	21	0.000	7.50E-04	**0.00E+00**
02	Reactor Coolant Pump	COP	0	1	0	0	0.000	6.10E-03	**0.00E+00**
03	Transients and Hotwork	COP	0	1	0	0	0.000	2.00E-03	**0.00E+00**
04	Main Control Board	CR	0	1	0	0	0.000	2.50E-03	**0.00E+00**
05	Cable Fires caused by welding and cutting (Cntrl/Aux/Rx Building)	CAR	1	1	2	1166	0.002	1.60E-03	**2.74E-06**
06	Transient fires caused by welding and cutting (Cntrl/Aux/Rx Building)	CAR	1	1	1	53	0.019	9.70E-03	**1.83E-04**
07	Transients (Cntrl/Aux/Rx Building)	CAR	1	1	1	53	0.019	3.90E-03	**7.36E-05**
08	Diesel Generators	DGR	1	1	0	4	0.000	2.10E-02	**0.00E+00**
09	Air Compressors	XX	1	1	0	4	0.000	2.40E-03	**0.00E+00**
10	Battery Chargers	XX	1	1	0	15	0.000	1.80E-03	**0.00E+00**
11	Cable Fires caused by welding and cutting (Plant-Wide)	XX	0	1	0	430	0.000	2.00E-03	**0.00E+00**
12	Cable Run	XX	1	1	2	1820	0.001	4.40E-03	**4.84E-06**
13	Dryers	XX	1	1	0	2	0.000	2.60E-03	**0.00E+00**
14	Electric Motors	XX	1	1	0	8	0.000	4.60E-03	**0.00E+00**
15	Electrical Cabinets	XX	1	1	0	530	0.000	4.50E-02	**0.00E+00**
16	High Energy Arcing Faults	XX	1	1	0	77	0.000	1.50E-03	**0.00E+00**
17	Hydrogen Tanks	XX	1	1	0	2	0.000	1.70E-03	**0.00E+00**
18	Junction Boxes	XX	1	1	2	1820	0.001	1.90E-03	**2.09E-06**
19	Misc. Hydrogen Fires	XX	1	1	0	0	0.000	2.50E-03	**0.00E+00**
20	Off-gas/H2 Recombiner (BWR)	XX	1	1	0	2	0.000	4.40E-02	**0.00E+00**
21	Pumps	XX	1	1	0	43	0.000	2.10E-02	**0.00E+00**
22	RPS MG Sets	XX	0	1	0	0	0.000	1.60E-03	**0.00E+00**
23a	Transformers (oil filled)	XX	1	1	0	0	0.000	9.90E-03	**0.00E+00**
23b	Transformers (dry)	XX	1	1	0	67	0.000	9.90E-03	**0.00E+00**
24	Transient fires caused by welding and cutting (Plant-Wide)	XX	0	1	0	78	0.000	4.90E-03	**0.00E+00**
25	Transients (Plant-Wide)	XX	0	1	0	78	0.000	9.90E-03	**0.00E+00**
26	Ventilation Subsystems	XX	1	1	0	26	0.000	7.40E-03	**0.00E+00**
27	Transformer - Catastrophic	TY	0	1	0	9	0.000	6.00E-03	**0.00E+00**
28	Transformer - Non Catastrophic	TY	0	1	0	8	0.000	1.20E-02	**0.00E+00**
29	Yard Transformers (others)	TY	0	1	0	1	0.000	2.20E-03	**0.00E+00**
30	Boiler	TB	0	1	0	2	0.000	1.10E-03	**0.00E+00**
31	Cable Fires caused by welding and cutting (Turbine Building)	TB	0	1	0	224	0.000	1.60E-03	**0.00E+00**
32	Main Feedwater Pumps	TB	1	1	0	8	0.000	1.30E-02	**0.00E+00**
33	Turbine Generator Excitor	TB	0	1	0	1	0.000	3.90E-03	**0.00E+00**
34	Turbine Generator Hydrogen	TB	0	1	0	1	0.000	6.50E-03	**0.00E+00**
35	Turbine Generator Oil	TB	0	1	0	1	0.000	9.50E-03	**0.00E+00**
36	Transient fires caused by welding and cutting (Turbine Building)	TB	0	1	0	17	0.000	8.20E-03	**0.00E+00**
37	Transients (Turbine Building)	TB	0	1	0	17	0.000	8.50E-03	**0.00E+00**
Compartment Fire Frequency (FL)			**2.66E-04**						
Notes:									
(A) Number of Ignition Sources in Compartment									
(B) Total Number of Ignition Sources in Selected Plant Location or in Plant for Plant Wide Components									
*Ignition Source Frequency: FIF = WFL*WFIS*FF*									
Compartment Fire Frequency: FL = SUM(FIF)									

Table 12A-16

F1311 - Fire Compartment Ignition Source Data Sheet (ISDS)

Compartment Description									
	Fire Area		Fire Area F1311						
	Fire Compartment		F1311	Division 1 Electrical					
Compartment Fire Ignition Frequency									
Step 1.1	Plant Location ID		CAR						
	Plant Location Description		Control/Auxiliary/Reactor Building						
Step 1.2	Location Weighting Factor (WFL)		1.00E+00	Plant Location					
	Location Weighting Factor (WFL)		1.00E+00	Plant Wide Components					
Compartment Ignition Sources		Plant	App. to	Weighting	Sources in	Sources in	Weighting	Fire	**Ignition Source**
(FIF)		Location	This Area	Factor	Compartment	Plant Location	Factor	Frequency	**Frequency**
Bin #	Ignition Source	L	APP	WFL	(A)	(B)	WFIS=(A)/(B)	(FF)	**(FIF)**
01	Batteries	BR	1	1	0	21	0.000	7.50E-04	**0.00E+00**
02	Reactor Coolant Pump	COP	0	1	0	0	0.000	6.10E-03	**0.00E+00**
03	Transients and Hotwork	COP	0	1	0	0	0.000	2.00E-03	**0.00E+00**
04	Main Control Board	CR	0	1	0	0	0.000	2.50E-03	**0.00E+00**
05	Cable Fires caused by welding and cutting (Cntrl/Aux/Rx Building)	CAR	1	1	90	1166	0.077	1.60E-03	**1.23E-04**
06	Transient fires caused by welding and cutting (Cntrl/Aux/Rx Building)	CAR	1	1	1	53	0.019	9.70E-03	**1.83E-04**
07	Transients (Cntrl/Aux/Rx Building)	CAR	1	1	1	53	0.019	3.90E-03	**7.36E-05**
08	Diesel Generators	DGR	1	1	0	4	0.000	2.10E-02	**0.00E+00**
09	Air Compressors	XX	1	1	0	4	0.000	2.40E-03	**0.00E+00**
10	Battery Chargers	XX	1	1	2	15	0.133	1.80E-03	**2.40E-04**
11	Cable Fires caused by welding and cutting (Plant-Wide)	XX	0	1	0	430	0.000	2.00E-03	**0.00E+00**
12	Cable Run	XX	1	1	90	1820	0.049	4.40E-03	**2.18E-04**
13	Dryers	XX	1	1	0	2	0.000	2.60E-03	**0.00E+00**
14	Electric Motors	XX	1	1	0	8	0.000	4.60E-03	**0.00E+00**
15	Electrical Cabinets	XX	1	1	17	530	0.032	4.50E-02	**1.44E-03**
16	High Energy Arcing Faults	XX	1	1	3	77	0.039	1.50E-03	**5.84E-05**
17	Hydrogen Tanks	XX	1	1	0	2	0.000	1.70E-03	**0.00E+00**
18	Junction Boxes	XX	1	1	90	1820	0.049	1.90E-03	**9.40E-05**
19	Misc. Hydrogen Fires	XX	1	1	0	0	0.000	2.50E-03	**0.00E+00**
20	Off-gas/H2 Recombiner (BWR)	XX	1	1	0	2	0.000	4.40E-02	**0.00E+00**
21	Pumps	XX	1	1	0	43	0.000	2.10E-02	**0.00E+00**
22	RPS MG Sets	XX	0	1	0	0	0.000	1.60E-03	**0.00E+00**
23a	Transformers (oil filled)	XX	1	1	0	0	0.000	9.90E-03	**0.00E+00**
23b	Transformers (dry)	XX	1	1	1	67	0.015	9.90E-03	**1.48E-04**
24	Transient fires caused by welding and cutting (Plant-Wide)	XX	0	1	0	78	0.000	4.90E-03	**0.00E+00**
25	Transients (Plant-Wide)	XX	0	1	0	78	0.000	9.90E-03	**0.00E+00**
26	Ventilation Subsystems	XX	1	1	0	26	0.000	7.40E-03	**0.00E+00**
27	Transformer - Catastrophic	TY	0	1	0	9	0.000	6.00E-03	**0.00E+00**
28	Transformer - Non Catastrophic	TY	0	1	0	8	0.000	1.20E-02	**0.00E+00**
29	Yard Transformers (others)	TY	0	1	0	1	0.000	2.20E-03	**0.00E+00**
30	Boiler	TB	0	1	0	2	0.000	1.10E-03	**0.00E+00**
31	Cable Fires caused by welding and cutting (Turbine Building)	TB	0	1	0	224	0.000	1.60E-03	**0.00E+00**
32	Main Feedwater Pumps	TB	1	1	0	8	0.000	1.30E-02	**0.00E+00**
33	Turbine Generator Excitor	TB	0	1	0	1	0.000	3.90E-03	**0.00E+00**
34	Turbine Generator Hydrogen	TB	0	1	0	1	0.000	6.50E-03	**0.00E+00**
35	Turbine Generator Oil	TB	0	1	0	1	0.000	9.50E-03	**0.00E+00**
36	Transient fires caused by welding and cutting (Turbine Building)	TB	0	1	0	17	0.000	8.20E-03	**0.00E+00**
37	Transients (Turbine Building)	TB	0	1	0	17	0.000	8.50E-03	**0.00E+00**
Compartment Fire Frequency (FL)			**2.58E-03**						
Notes:									
(A) Number of Ignition Sources in Compartment									
(B) Total Number of Ignition Sources in Selected Plant Location or in Plant for Plant Wide Components									
*Ignition Source Frequency: FIF = WFL*WFIS*FF*									
Compartment Fire Frequency: FL = SUM(FIF)									

Table 12A-17

F1321 - Fire Compartment Ignition Source Data Sheet (ISDS)

Compartment Description									
	Fire Area		Fire Area F1321						
	Fire Compartment		F1321	Division 2 Electrical					
Compartment Fire Ignition Frequency									
Step 1.1	Plant Location ID		CAR						
	Plant Location Description		Control/Auxiliary/Reactor Building						
Step 1.2	Location Weighting Factor (WFL)		1.00E+00	Plant Location					
	Location Weighting Factor (WFL)		1.00E+00	Plant Wide Components					
Compartment Ignition Sources		Plant	App. to	Weighting	Sources in	Sources in	Weighting	Fire	**Ignition Source**
(FIF)		Location	This Area	Factor	Compartment	Plant Location	Factor	Frequency	**Frequency**
Bin #	Ignition Source	L	APP	WFL	(A)	(B)	WFIS=(A)/(B)	(FF)	**(FIF)**
01	Batteries	BR	1	1	0	21	0.000	7.50E-04	**0.00E+00**
02	Reactor Coolant Pump	COP	0	1	0	0	0.000	6.10E-03	**0.00E+00**
03	Transients and Hotwork	COP	0	1	0	0	0.000	2.00E-03	**0.00E+00**
04	Main Control Board	CR	0	1	0	0	0.000	2.50E-03	**0.00E+00**
05	Cable Fires caused by welding and cutting (Cntrl/Aux/Rx Building)	CAR	1	1	88	1166	0.075	1.60E-03	**1.21E-04**
06	Transient fires caused by welding and cutting (Cntrl/Aux/Rx Building)	CAR	1	1	1	53	0.019	9.70E-03	**1.83E-04**
07	Transients (Cntrl/Aux/Rx Building)	CAR	1	1	1	53	0.019	3.90E-03	**7.36E-05**
08	Diesel Generators	DGR	1	1	0	4	0.000	2.10E-02	**0.00E+00**
09	Air Compressors	XX	1	1	0	4	0.000	2.40E-03	**0.00E+00**
10	Battery Chargers	XX	1	1	2	15	0.133	1.80E-03	**2.40E-04**
11	Cable Fires caused by welding and cutting (Plant-Wide)	XX	0	1	0	430	0.000	2.00E-03	**0.00E+00**
12	Cable Run	XX	1	1	88	1820	0.048	4.40E-03	**2.13E-04**
13	Dryers	XX	1	1	0	2	0.000	2.60E-03	**0.00E+00**
14	Electric Motors	XX	1	1	0	8	0.000	4.60E-03	**0.00E+00**
15	Electrical Cabinets	XX	1	1	16	530	0.030	4.50E-02	**1.36E-03**
16	High Energy Arcing Faults	XX	1	1	3	77	0.039	1.50E-03	**5.84E-05**
17	Hydrogen Tanks	XX	1	1	0	2	0.000	1.70E-03	**0.00E+00**
18	Junction Boxes	XX	1	1	88	1820	0.048	1.90E-03	**9.19E-05**
19	Misc. Hydrogen Fires	XX	1	1	0	0	0.000	2.50E-03	**0.00E+00**
20	Off-gas/H2 Recombiner (BWR)	XX	1	1	0	2	0.000	4.40E-02	**0.00E+00**
21	Pumps	XX	1	1	0	43	0.000	2.10E-02	**0.00E+00**
22	RPS MG Sets	XX	0	1	0	0	0.000	1.60E-03	**0.00E+00**
23a	Transformers (oil filled)	XX	1	1	0	0	0.000	9.90E-03	**0.00E+00**
23b	Transformers (dry)	XX	1	1	1	67	0.015	9.90E-03	**1.48E-04**
24	Transient fires caused by welding and cutting (Plant-Wide)	XX	0	1	0	78	0.000	4.90E-03	**0.00E+00**
25	Transients (Plant-Wide)	XX	0	1	0	78	0.000	9.90E-03	**0.00E+00**
26	Ventilation Subsystems	XX	1	1	0	26	0.000	7.40E-03	**0.00E+00**
27	Transformer - Catastrophic	TY	0	1	0	9	0.000	6.00E-03	**0.00E+00**
28	Transformer - Non Catastrophic	TY	0	1	0	8	0.000	1.20E-02	**0.00E+00**
29	Yard Transformers (others)	TY	0	1	0	1	0.000	2.20E-03	**0.00E+00**
30	Boiler	TB	0	1	0	2	0.000	1.10E-03	**0.00E+00**
31	Cable Fires caused by welding and cutting (Turbine Building)	TB	0	1	0	224	0.000	1.60E-03	**0.00E+00**
32	Main Feedwater Pumps	TB	1	1	0	8	0.000	1.30E-02	**0.00E+00**
33	Turbine Generator Excitor	TB	0	1	0	1	0.000	3.90E-03	**0.00E+00**
34	Turbine Generator Hydrogen	TB	0	1	0	1	0.000	6.50E-03	**0.00E+00**
35	Turbine Generator Oil	TB	0	1	0	1	0.000	9.50E-03	**0.00E+00**
36	Transient fires caused by welding and cutting (Turbine Building)	TB	0	1	0	17	0.000	8.20E-03	**0.00E+00**
37	Transients (Turbine Building)	TB	0	1	0	17	0.000	8.50E-03	**0.00E+00**
Compartment Fire Frequency (FL)			**2.49E-03**						
Notes:									
(A) Number of Ignition Sources in Compartment									
(B) Total Number of Ignition Sources in Selected Plant Location or in Plant for Plant Wide Components									
*Ignition Source Frequency: FIF = WFL*WFIS*FF*									
Compartment Fire Frequency: FL = SUM(FIF)									

Table 12A-18

F1331 - Fire Compartment Ignition Source Data Sheet (ISDS)

Compartment Description									
	Fire Area		Fire Area F1331						
	Fire Compartment		F1331	Division 3 Electrical					
Compartment Fire Ignition Frequency									
Step 1.1	Plant Location ID		CAR						
	Plant Location Description		Control/Auxiliary/Reactor Building						
Step 1.2	Location Weighting Factor (WFL)		1.00E+00	Plant Location					
	Location Weighting Factor (WFL)		1.00E+00	Plant Wide Components					
Compartment Ignition Sources		Plant	App. to	Weighting	Sources in	Sources in	Weighting	Fire	**Ignition Source**
(FIF)		Location	This Area	Factor	Compartment	Plant Location	Factor	Frequency	**Frequency**
Bin #	Ignition Source	L	APP	WFL	(A)	(B)	WFIS=(A)/(B)	(FF)	**(FIF)**
01	Batteries	BR	1	1	0	21	0.000	7.50E-04	**0.00E+00**
02	Reactor Coolant Pump	COP	0	1	0	0	0.000	6.10E-03	**0.00E+00**
03	Transients and Hotwork	COP	0	1	0	0	0.000	2.00E-03	**0.00E+00**
04	Main Control Board	CR	0	1	0	0	0.000	2.50E-03	**0.00E+00**
05	Cable Fires caused by welding and cutting (Cntrl/Aux/Rx Building)	CAR	1	1	77	1166	0.066	1.60E-03	**1.06E-04**
06	Transient fires caused by welding and cutting (Cntrl/Aux/Rx Building)	CAR	1	1	1	53	0.019	9.70E-03	**1.83E-04**
07	Transients (Cntrl/Aux/Rx Building)	CAR	1	1	1	53	0.019	3.90E-03	**7.36E-05**
08	Diesel Generators	DGR	1	1	0	4	0.000	2.10E-02	**0.00E+00**
09	Air Compressors	XX	1	1	0	4	0.000	2.40E-03	**0.00E+00**
10	Battery Chargers	XX	1	1	2	15	0.133	1.80E-03	**2.40E-04**
11	Cable Fires caused by welding and cutting (Plant-Wide)	XX	0	1	0	430	0.000	2.00E-03	**0.00E+00**
12	Cable Run	XX	1	1	77	1820	0.042	4.40E-03	**1.86E-04**
13	Dryers	XX	1	1	0	2	0.000	2.60E-03	**0.00E+00**
14	Electric Motors	XX	1	1	0	8	0.000	4.60E-03	**0.00E+00**
15	Electrical Cabinets	XX	1	1	18	530	0.034	4.50E-02	**1.53E-03**
16	High Energy Arcing Faults	XX	1	1	3	77	0.039	1.50E-03	**5.84E-05**
17	Hydrogen Tanks	XX	1	1	0	2	0.000	1.70E-03	**0.00E+00**
18	Junction Boxes	XX	1	1	77	1820	0.042	1.90E-03	**8.04E-05**
19	Misc. Hydrogen Fires	XX	1	1	0	0	0.000	2.50E-03	**0.00E+00**
20	Off-gas/H2 Recombiner (BWR)	XX	1	1	0	2	0.000	4.40E-02	**0.00E+00**
21	Pumps	XX	1	1	0	43	0.000	2.10E-02	**0.00E+00**
22	RPS MG Sets	XX	0	1	0	0	0.000	1.60E-03	**0.00E+00**
23a	Transformers (oil filled)	XX	1	1	0	0	0.000	9.90E-03	**0.00E+00**
23b	Transformers (dry)	XX	1	1	1	67	0.015	9.90E-03	**1.48E-04**
24	Transient fires caused by welding and cutting (Plant-Wide)	XX	0	1	0	78	0.000	4.90E-03	**0.00E+00**
25	Transients (Plant-Wide)	XX	0	1	0	78	0.000	9.90E-03	**0.00E+00**
26	Ventilation Subsystems	XX	1	1	0	26	0.000	7.40E-03	**0.00E+00**
27	Transformer - Catastrophic	TY	0	1	0	9	0.000	6.00E-03	**0.00E+00**
28	Transformer - Non Catastrophic	TY	0	1	0	8	0.000	1.20E-02	**0.00E+00**
29	Yard Transformers (others)	TY	0	1	0	1	0.000	2.20E-03	**0.00E+00**
30	Boiler	TB	0	1	0	2	0.000	1.10E-03	**0.00E+00**
31	Cable Fires caused by welding and cutting (Turbine Building)	TB	0	1	0	224	0.000	1.60E-03	**0.00E+00**
32	Main Feedwater Pumps	TB	1	1	0	8	0.000	1.30E-02	**0.00E+00**
33	Turbine Generator Excitor	TB	0	1	0	1	0.000	3.90E-03	**0.00E+00**
34	Turbine Generator Hydrogen	TB	0	1	0	1	0.000	6.50E-03	**0.00E+00**
35	Turbine Generator Oil	TB	0	1	0	1	0.000	9.50E-03	**0.00E+00**
36	Transient fires caused by welding and cutting (Turbine Building)	TB	0	1	0	17	0.000	8.20E-03	**0.00E+00**
37	Transients (Turbine Building)	TB	0	1	0	17	0.000	8.50E-03	**0.00E+00**
Compartment Fire Frequency (FL)			**2.60E-03**						
Notes:									
(A) Number of Ignition Sources in Compartment									
(B) Total Number of Ignition Sources in Selected Plant Location or in Plant for Plant Wide Components									
*Ignition Source Frequency: FIF = WFL*WFIS*FF*									
Compartment Fire Frequency: FL = SUM(FIF)									

Table 12A-19

F1341 - Fire Compartment Ignition Source Data Sheet (ISDS)

Compartment Description									
	Fire Area		Fire Area F1341						
	Fire Compartment		F1341	Division 4 Electrical					
Compartment Fire Ignition Frequency									
Step 1.1	Plant Location ID		CAR						
	Plant Location Description		Control/Auxiliary/Reactor Building						
Step 1.2	Location Weighting Factor (WFL)		1.00E+00	Plant Location					
	Location Weighting Factor (WFL)		1.00E+00	Plant Wide Components					
Compartment Ignition Sources		Plant	App. to	Weighting	Sources in	Sources in	Weighting	Fire	**Ignition Source**
(FIF)		Location	This Area	Factor	Compartment	Plant Location	Factor	Frequency	**Frequency**
Bin #	Ignition Source	L	APP	WFL	(A)	(B)	WFIS=(A)/(B)	(FF)	**(FIF)**
01	Batteries	BR	1	1	0	21	0.000	7.50E-04	**0.00E+00**
02	Reactor Coolant Pump	COP	0	1	0	0	0.000	6.10E-03	**0.00E+00**
03	Transients and Hotwork	COP	0	1	0	0	0.000	2.00E-03	**0.00E+00**
04	Main Control Board	CR	0	1	0	0	0.000	2.50E-03	**0.00E+00**
05	Cable Fires caused by welding and cutting (Cntrl/Aux/Rx Building)	CAR	1	1	108	1166	0.093	1.60E-03	**1.48E-04**
06	Transient fires caused by welding and cutting (Cntrl/Aux/Rx Building)	CAR	1	1	1	53	0.019	9.70E-03	**1.83E-04**
07	Transients (Cntrl/Aux/Rx Building)	CAR	1	1	1	53	0.019	3.90E-03	**7.36E-05**
08	Diesel Generators	DGR	1	1	0	4	0.000	2.10E-02	**0.00E+00**
09	Air Compressors	XX	1	1	0	4	0.000	2.40E-03	**0.00E+00**
10	Battery Chargers	XX	1	1	2	15	0.133	1.80E-03	**2.40E-04**
11	Cable Fires caused by welding and cutting (Plant-Wide)	XX	0	1	0	430	0.000	2.00E-03	**0.00E+00**
12	Cable Run	XX	1	1	108	1820	0.059	4.40E-03	**2.61E-04**
13	Dryers	XX	1	1	0	2	0.000	2.60E-03	**0.00E+00**
14	Electric Motors	XX	1	1	0	8	0.000	4.60E-03	**0.00E+00**
15	Electrical Cabinets	XX	1	1	17	530	0.032	4.50E-02	**1.44E-03**
16	High Energy Arcing Faults	XX	1	1	3	77	0.039	1.50E-03	**5.84E-05**
17	Hydrogen Tanks	XX	1	1	0	2	0.000	1.70E-03	**0.00E+00**
18	Junction Boxes	XX	1	1	108	1820	0.059	1.90E-03	**1.13E-04**
19	Misc. Hydrogen Fires	XX	1	1	0	0	0.000	2.50E-03	**0.00E+00**
20	Off-gas/H2 Recombiner (BWR)	XX	1	1	0	2	0.000	4.40E-02	**0.00E+00**
21	Pumps	XX	1	1	0	43	0.000	2.10E-02	**0.00E+00**
22	RPS MG Sets	XX	0	1	0	0	0.000	1.60E-03	**0.00E+00**
23a	Transformers (oil filled)	XX	1	1	0	0	0.000	9.90E-03	**0.00E+00**
23b	Transformers (dry)	XX	1	1	1	67	0.015	9.90E-03	**1.48E-04**
24	Transient fires caused by welding and cutting (Plant-Wide)	XX	0	1	0	78	0.000	4.90E-03	**0.00E+00**
25	Transients (Plant-Wide)	XX	0	1	0	78	0.000	9.90E-03	**0.00E+00**
26	Ventilation Subsystems	XX	1	1	0	26	0.000	7.40E-03	**0.00E+00**
27	Transformer - Catastrophic	TY	0	1	0	9	0.000	6.00E-03	**0.00E+00**
28	Transformer - Non Catastrophic	TY	0	1	0	8	0.000	1.20E-02	**0.00E+00**
29	Yard Transformers (others)	TY	0	1	0	1	0.000	2.20E-03	**0.00E+00**
30	Boiler	TB	0	1	0	2	0.000	1.10E-03	**0.00E+00**
31	Cable Fires caused by welding and cutting (Turbine Building)	TB	0	1	0	224	0.000	1.60E-03	**0.00E+00**
32	Main Feedwater Pumps	TB	1	1	0	8	0.000	1.30E-02	**0.00E+00**
33	Turbine Generator Excitor	TB	0	1	0	1	0.000	3.90E-03	**0.00E+00**
34	Turbine Generator Hydrogen	TB	0	1	0	1	0.000	6.50E-03	**0.00E+00**
35	Turbine Generator Oil	TB	0	1	0	1	0.000	9.50E-03	**0.00E+00**
36	Transient fires caused by welding and cutting (Turbine Building)	TB	0	1	0	17	0.000	8.20E-03	**0.00E+00**
37	Transients (Turbine Building)	TB	0	1	0	17	0.000	8.50E-03	**0.00E+00**
Compartment Fire Frequency (FL)			**2.67E-03**						
Notes:									
(A) Number of Ignition Sources in Compartment									
(B) Total Number of Ignition Sources in Selected Plant Location or in Plant for Plant Wide Components									
*Ignition Source Frequency: FIF = WFL*WFIS*FF*									
Compartment Fire Frequency: FL = SUM(FIF)									

Table 12A-20

F1600 - Fire Compartment Ignition Source Data Sheet (ISDS)

Compartment Description									
	Fire Area		Fire Area F1600						
	Fire Compartment		F1600	Refueling Floor and Common Access					
Compartment Fire Ignition Frequency									
Step 1.1	Plant Location ID		CAR						
	Plant Location Description		Control/Auxiliary/Reactor Building						
Step 1.2	Location Weighting Factor (WFL)		1.00E+00	Plant Location					
	Location Weighting Factor (WFL)		1.00E+00	Plant Wide Components					
Compartment Ignition Sources		Plant	App. to	Weighting	Sources in	Sources in	Weighting	Fire	**Ignition Source**
(FIF)		Location	This Area	Factor	Compartment	Plant Location	Factor	Frequency	**Frequency**
Bin #	Ignition Source	L	APP	WFL	(A)	(B)	WFIS=(A)/(B)	(FF)	**(FIF)**
01	Batteries	BR	1	1	0	21	0.000	7.50E-04	**0.00E+00**
02	Reactor Coolant Pump	COP	0	1	0	0	0.000	6.10E-03	**0.00E+00**
03	Transients and Hotwork	COP	0	1	0	0	0.000	2.00E-03	**0.00E+00**
04	Main Control Board	CR	0	1	0	0	0.000	2.50E-03	**0.00E+00**
05	Cable Fires caused by welding and cutting (Cntrl/Aux/Rx Building)	CAR	1	1	0	1166	0.000	1.60E-03	**0.00E+00**
06	Transient fires caused by welding and cutting (Cntrl/Aux/Rx Building)	CAR	1	1	1	53	0.019	9.70E-03	**1.83E-04**
07	Transients (Cntrl/Aux/Rx Building)	CAR	1	1	1	53	0.019	3.90E-03	**7.36E-05**
08	Diesel Generators	DGR	1	1	0	4	0.000	2.10E-02	**0.00E+00**
09	Air Compressors	XX	1	1	0	4	0.000	2.40E-03	**0.00E+00**
10	Battery Chargers	XX	1	1	0	15	0.000	1.80E-03	**0.00E+00**
11	Cable Fires caused by welding and cutting (Plant-Wide)	XX	0	1	0	430	0.000	2.00E-03	**0.00E+00**
12	Cable Run	XX	1	1	0	1820	0.000	4.40E-03	**0.00E+00**
13	Dryers	XX	1	1	0	2	0.000	2.60E-03	**0.00E+00**
14	Electric Motors	XX	1	1	0	8	0.000	4.60E-03	**0.00E+00**
15	Electrical Cabinets	XX	1	1	2	530	0.004	4.50E-02	**1.70E-04**
16	High Energy Arcing Faults	XX	1	1	0	77	0.000	1.50E-03	**0.00E+00**
17	Hydrogen Tanks	XX	1	1	0	2	0.000	1.70E-03	**0.00E+00**
18	Junction Boxes	XX	1	1	0	1820	0.000	1.90E-03	**0.00E+00**
19	Misc. Hydrogen Fires	XX	1	1	0	0	0.000	2.50E-03	**0.00E+00**
20	Off-gas/H2 Recombiner (BWR)	XX	1	1	0	2	0.000	4.40E-02	**0.00E+00**
21	Pumps	XX	1	1	0	43	0.000	2.10E-02	**0.00E+00**
22	RPS MG Sets	XX	0	1	0	0	0.000	1.60E-03	**0.00E+00**
23a	Transformers (oil filled)	XX	1	1	0	0	0.000	9.90E-03	**0.00E+00**
23b	Transformers (dry)	XX	1	1	0	67	0.000	9.90E-03	**0.00E+00**
24	Transient fires caused by welding and cutting (Plant-Wide)	XX	0	1	0	78	0.000	4.90E-03	**0.00E+00**
25	Transients (Plant-Wide)	XX	0	1	0	78	0.000	9.90E-03	**0.00E+00**
26	Ventilation Subsystems	XX	1	1	0	26	0.000	7.40E-03	**0.00E+00**
27	Transformer - Catastrophic	TY	0	1	0	9	0.000	6.00E-03	**0.00E+00**
28	Transformer - Non Catastrophic	TY	0	1	0	8	0.000	1.20E-02	**0.00E+00**
29	Yard Transformers (others)	TY	0	1	0	1	0.000	2.20E-03	**0.00E+00**
30	Boiler	TB	0	1	0	2	0.000	1.10E-03	**0.00E+00**
31	Cable Fires caused by welding and cutting (Turbine Building)	TB	0	1	0	224	0.000	1.60E-03	**0.00E+00**
32	Main Feedwater Pumps	TB	1	1	0	8	0.000	1.30E-02	**0.00E+00**
33	Turbine Generator Excitor	TB	0	1	0	1	0.000	3.90E-03	**0.00E+00**
34	Turbine Generator Hydrogen	TB	0	1	0	1	0.000	6.50E-03	**0.00E+00**
35	Turbine Generator Oil	TB	0	1	0	1	0.000	9.50E-03	**0.00E+00**
36	Transient fires caused by welding and cutting (Turbine Building)	TB	0	1	0	17	0.000	8.20E-03	**0.00E+00**
37	Transients (Turbine Building)	TB	0	1	0	17	0.000	8.50E-03	**0.00E+00**
Compartment Fire Frequency (FL)			**4.26E-04**						
Notes:									
(A) Number of Ignition Sources in Compartment									
(B) Total Number of Ignition Sources in Selected Plant Location or in Plant for Plant Wide Components									
*Ignition Source Frequency: FIF = WFL*WFIS*FF*									
Compartment Fire Frequency: FL = SUM(FIF)									

Table 12A-21

F1770 - Fire Compartment Ignition Source Data Sheet (ISDS)

Compartment Description									
	Fire Area		Fire Area F1770						
	Fire Compartment		F1770	Main Steam Tunnel					
Compartment Fire Ignition Frequency									
Step 1.1	Plant Location ID		CAR						
	Plant Location Description		Control/Auxiliary/Reactor Building						
Step 1.2	Location Weighting Factor (WFL)		1.00E+00	Plant Location					
	Location Weighting Factor (WFL)		1.00E+00	Plant Wide Components					
Compartment Ignition Sources		Plant	App. to	Weighting	Sources in	Sources in	Weighting	Fire	**Ignition Source**
(FIF)		Location	This Area	Factor	Compartment	Plant Location	Factor	Frequency	**Frequency**
Bin #	Ignition Source	L	APP	WFL	(A)	(B)	WFIS=(A)/(B)	(FF)	**(FIF)**
01	Batteries	BR	1	1	0	21	0.000	7.50E-04	**0.00E+00**
02	Reactor Coolant Pump	COP	0	1	0	0	0.000	6.10E-03	**0.00E+00**
03	Transients and Hotwork	COP	0	1	0	0	0.000	2.00E-03	**0.00E+00**
04	Main Control Board	CR	0	1	0	0	0.000	2.50E-03	**0.00E+00**
05	Cable Fires caused by welding and cutting (Cntrl/Aux/Rx Building)	CAR	1	1	8	1166	0.007	1.60E-03	**1.10E-05**
06	Transient fires caused by welding and cutting (Cntrl/Aux/Rx Building)	CAR	1	1	1	53	0.019	9.70E-03	**1.83E-04**
07	Transients (Cntrl/Aux/Rx Building)	CAR	1	1	1	53	0.019	3.90E-03	**7.36E-05**
08	Diesel Generators	DGR	1	1	0	4	0.000	2.10E-02	**0.00E+00**
09	Air Compressors	XX	1	1	0	4	0.000	2.40E-03	**0.00E+00**
10	Battery Chargers	XX	1	1	0	15	0.000	1.80E-03	**0.00E+00**
11	Cable Fires caused by welding and cutting (Plant-Wide)	XX	0	1	0	430	0.000	2.00E-03	**0.00E+00**
12	Cable Run	XX	1	1	8	1820	0.004	4.40E-03	**1.93E-05**
13	Dryers	XX	1	1	0	2	0.000	2.60E-03	**0.00E+00**
14	Electric Motors	XX	1	1	0	8	0.000	4.60E-03	**0.00E+00**
15	Electrical Cabinets	XX	1	1	0	530	0.000	4.50E-02	**0.00E+00**
16	High Energy Arcing Faults	XX	1	1	0	77	0.000	1.50E-03	**0.00E+00**
17	Hydrogen Tanks	XX	1	1	0	2	0.000	1.70E-03	**0.00E+00**
18	Junction Boxes	XX	1	1	8	1820	0.004	1.90E-03	**8.35E-06**
19	Misc. Hydrogen Fires	XX	1	1	0	0	0.000	2.50E-03	**0.00E+00**
20	Off-gas/H2 Recombiner (BWR)	XX	1	1	0	2	0.000	4.40E-02	**0.00E+00**
21	Pumps	XX	1	1	0	43	0.000	2.10E-02	**0.00E+00**
22	RPS MG Sets	XX	0	1	0	0	0.000	1.60E-03	**0.00E+00**
23a	Transformers (oil filled)	XX	1	1	0	0	0.000	9.90E-03	**0.00E+00**
23b	Transformers (dry)	XX	1	1	0	67	0.000	9.90E-03	**0.00E+00**
24	Transient fires caused by welding and cutting (Plant-Wide)	XX	0	1	0	78	0.000	4.90E-03	**0.00E+00**
25	Transients (Plant-Wide)	XX	0	1	0	78	0.000	9.90E-03	**0.00E+00**
26	Ventilation Subsystems	XX	1	1	0	26	0.000	7.40E-03	**0.00E+00**
27	Transformer - Catastrophic	TY	0	1	0	9	0.000	6.00E-03	**0.00E+00**
28	Transformer - Non Catastrophic	TY	0	1	0	8	0.000	1.20E-02	**0.00E+00**
29	Yard Transformers (others)	TY	0	1	0	1	0.000	2.20E-03	**0.00E+00**
30	Boiler	TB	0	1	0	2	0.000	1.10E-03	**0.00E+00**
31	Cable Fires caused by welding and cutting (Turbine Building)	TB	0	1	0	224	0.000	1.60E-03	**0.00E+00**
32	Main Feedwater Pumps	TB	1	1	0	8	0.000	1.30E-02	**0.00E+00**
33	Turbine Generator Excitor	TB	0	1	0	1	0.000	3.90E-03	**0.00E+00**
34	Turbine Generator Hydrogen	TB	0	1	0	1	0.000	6.50E-03	**0.00E+00**
35	Turbine Generator Oil	TB	0	1	0	1	0.000	9.50E-03	**0.00E+00**
36	Transient fires caused by welding and cutting (Turbine Building)	TB	0	1	0	17	0.000	8.20E-03	**0.00E+00**
37	Transients (Turbine Building)	TB	0	1	0	17	0.000	8.50E-03	**0.00E+00**
Compartment Fire Frequency (FL)			**2.95E-04**						
Notes:									
(A) Number of Ignition Sources in Compartment									
(B) Total Number of Ignition Sources in Selected Plant Location or in Plant for Plant Wide Components									
*Ignition Source Frequency: FIF = WFL*WFIS*FF*									
Compartment Fire Frequency: FL = SUM(FIF)									

Table 12A-22

F2100 - Fire Compartment Ignition Source Data Sheet (ISDS)

Compartment Description									
	Fire Area		Fire Area F2100						
	Fire Compartment		F2100	New and Spent Fuel Handling					
Compartment Fire Ignition Frequency									
Step 1.1	Plant Location ID		CAR						
	Plant Location Description		Control/Auxiliary/Reactor Building						
Step 1.2	Location Weighting Factor (WFL)		1.00E+00	Plant Location					
	Location Weighting Factor (WFL)		1.00E+00	Plant Wide Components					
Compartment Ignition Sources		Plant	App. to	Weighting	Sources in	Sources in	Weighting	Fire	**Ignition Source**
(FIF)		Location	This Area	Factor	Compartment	Plant Location	Factor	Frequency	**Frequency**
Bin #	Ignition Source	L	APP	WFL	(A)	(B)	WFIS=(A)/(B)	(FF)	**(FIF)**
01	Batteries	BR	1	1	0	21	0.000	7.50E-04	**0.00E+00**
02	Reactor Coolant Pump	COP	0	1	0	0	0.000	6.10E-03	**0.00E+00**
03	Transients and Hotwork	COP	0	1	0	0	0.000	2.00E-03	**0.00E+00**
04	Main Control Board	CR	0	1	0	0	0.000	2.50E-03	**0.00E+00**
05	Cable Fires caused by welding and cutting (Cntrl/Aux/Rx Building)	CAR	1	1	28	1166	0.024	1.60E-03	**3.84E-05**
06	Transient fires caused by welding and cutting (Cntrl/Aux/Rx Building)	CAR	1	1	1	53	0.019	9.70E-03	**1.83E-04**
07	Transients (Cntrl/Aux/Rx Building)	CAR	1	1	1	53	0.019	3.90E-03	**7.36E-05**
08	Diesel Generators	DGR	1	1	0	4	0.000	2.10E-02	**0.00E+00**
09	Air Compressors	XX	1	1	0	4	0.000	2.40E-03	**0.00E+00**
10	Battery Chargers	XX	1	1	0	15	0.000	1.80E-03	**0.00E+00**
11	Cable Fires caused by welding and cutting (Plant-Wide)	XX	0	1	0	430	0.000	2.00E-03	**0.00E+00**
12	Cable Run	XX	1	1	28	1820	0.015	4.40E-03	**6.77E-05**
13	Dryers	XX	1	1	0	2	0.000	2.60E-03	**0.00E+00**
14	Electric Motors	XX	1	1	0	8	0.000	4.60E-03	**0.00E+00**
15	Electrical Cabinets	XX	1	1	10	530	0.019	4.50E-02	**8.49E-04**
16	High Energy Arcing Faults	XX	1	1	0	77	0.000	1.50E-03	**0.00E+00**
17	Hydrogen Tanks	XX	1	1	0	2	0.000	1.70E-03	**0.00E+00**
18	Junction Boxes	XX	1	1	28	1820	0.015	1.90E-03	**2.92E-05**
19	Misc. Hydrogen Fires	XX	1	1	0	0	0.000	2.50E-03	**0.00E+00**
20	Off-gas/H2 Recombiner (BWR)	XX	1	1	0	2	0.000	4.40E-02	**0.00E+00**
21	Pumps	XX	1	1	2	43	0.047	2.10E-02	**9.77E-04**
22	RPS MG Sets	XX	0	1	0	0	0.000	1.60E-03	**0.00E+00**
23a	Transformers (oil filled)	XX	1	1	0	0	0.000	9.90E-03	**0.00E+00**
23b	Transformers (dry)	XX	1	1	0	67	0.000	9.90E-03	**0.00E+00**
24	Transient fires caused by welding and cutting (Plant-Wide)	XX	0	1	0	78	0.000	4.90E-03	**0.00E+00**
25	Transients (Plant-Wide)	XX	0	1	0	78	0.000	9.90E-03	**0.00E+00**
26	Ventilation Subsystems	XX	1	1	0	26	0.000	7.40E-03	**0.00E+00**
27	Transformer - Catastrophic	TY	0	1	0	9	0.000	6.00E-03	**0.00E+00**
28	Transformer - Non Catastrophic	TY	0	1	0	8	0.000	1.20E-02	**0.00E+00**
29	Yard Transformers (others)	TY	0	1	0	1	0.000	2.20E-03	**0.00E+00**
30	Boiler	TB	0	1	0	2	0.000	1.10E-03	**0.00E+00**
31	Cable Fires caused by welding and cutting (Turbine Building)	TB	0	1	0	224	0.000	1.60E-03	**0.00E+00**
32	Main Feedwater Pumps	TB	1	1	0	8	0.000	1.30E-02	**0.00E+00**
33	Turbine Generator Excitor	TB	0	1	0	1	0.000	3.90E-03	**0.00E+00**
34	Turbine Generator Hydrogen	TB	0	1	0	1	0.000	6.50E-03	**0.00E+00**
35	Turbine Generator Oil	TB	0	1	0	1	0.000	9.50E-03	**0.00E+00**
36	Transient fires caused by welding and cutting (Turbine Building)	TB	0	1	0	17	0.000	8.20E-03	**0.00E+00**
37	Transients (Turbine Building)	TB	0	1	0	17	0.000	8.50E-03	**0.00E+00**
Compartment Fire Frequency (FL)			**2.22E-03**						
Notes:									
(A) Number of Ignition Sources in Compartment									
(B) Total Number of Ignition Sources in Selected Plant Location or in Plant for Plant Wide Components									
*Ignition Source Frequency: FIF = WFL*WFIS*FF*									
Compartment Fire Frequency: FL = SUM(FIF)									

Table 12A-23

F3110 - Fire Compartment Ignition Source Data Sheet (ISDS)

Compartment Description									
	Fire Area		Fire Area F3110						
	Fire Compartment		F3110	Division 1 Electrical					
Compartment Fire Ignition Frequency									
Step 1.1	Plant Location ID		CAR						
	Plant Location Description		Control/Auxiliary/Reactor Building						
Step 1.2	Location Weighting Factor (WFL)		1.00E+00	Plant Location					
	Location Weighting Factor (WFL)		1.00E+00	Plant Wide Components					
Compartment Ignition Sources		Plant	App. to	Weighting	Sources in	Sources in	Weighting	Fire	**Ignition Source**
(FIF)		Location	This Area	Factor	Compartment	Plant Location	Factor	Frequency	**Frequency**
Bin #	Ignition Source	L	APP	WFL	(A)	(B)	WFIS=(A)/(B)	(FF)	**(FIF)**
01	Batteries	BR	1	1	0	21	0.000	7.50E-04	**0.00E+00**
02	Reactor Coolant Pump	COP	0	1	0	0	0.000	6.10E-03	**0.00E+00**
03	Transients and Hotwork	COP	0	1	0	0	0.000	2.00E-03	**0.00E+00**
04	Main Control Board	CR	0	1	0	0	0.000	2.50E-03	**0.00E+00**
05	Cable Fires caused by welding and cutting (Cntrl/Aux/Rx Building)	CAR	1	1	31	1166	0.027	1.60E-03	**4.25E-05**
06	Transient fires caused by welding and cutting (Cntrl/Aux/Rx Building)	CAR	1	1	1	53	0.019	9.70E-03	**1.83E-04**
07	Transients (Cntrl/Aux/Rx Building)	CAR	1	1	1	53	0.019	3.90E-03	**7.36E-05**
08	Diesel Generators	DGR	1	1	0	4	0.000	2.10E-02	**0.00E+00**
09	Air Compressors	XX	1	1	0	4	0.000	2.40E-03	**0.00E+00**
10	Battery Chargers	XX	1	1	0	15	0.000	1.80E-03	**0.00E+00**
11	Cable Fires caused by welding and cutting (Plant-Wide)	XX	0	1	0	430	0.000	2.00E-03	**0.00E+00**
12	Cable Run	XX	1	1	31	1820	0.017	4.40E-03	**7.49E-05**
13	Dryers	XX	1	1	0	2	0.000	2.60E-03	**0.00E+00**
14	Electric Motors	XX	1	1	0	8	0.000	4.60E-03	**0.00E+00**
15	Electrical Cabinets	XX	1	1	9	530	0.017	4.50E-02	**7.64E-04**
16	High Energy Arcing Faults	XX	1	1	2	77	0.026	1.50E-03	**3.90E-05**
17	Hydrogen Tanks	XX	1	1	0	2	0.000	1.70E-03	**0.00E+00**
18	Junction Boxes	XX	1	1	31	1820	0.017	1.90E-03	**3.24E-05**
19	Misc. Hydrogen Fires	XX	1	1	0	0	0.000	2.50E-03	**0.00E+00**
20	Off-gas/H2 Recombiner (BWR)	XX	1	1	0	2	0.000	4.40E-02	**0.00E+00**
21	Pumps	XX	1	1	0	43	0.000	2.10E-02	**0.00E+00**
22	RPS MG Sets	XX	0	1	0	0	0.000	1.60E-03	**0.00E+00**
23a	Transformers (oil filled)	XX	1	1	0	0	0.000	9.90E-03	**0.00E+00**
23b	Transformers (dry)	XX	1	1	1	67	0.015	9.90E-03	**1.48E-04**
24	Transient fires caused by welding and cutting (Plant-Wide)	XX	0	1	0	78	0.000	4.90E-03	**0.00E+00**
25	Transients (Plant-Wide)	XX	0	1	0	78	0.000	9.90E-03	**0.00E+00**
26	Ventilation Subsystems	XX	1	1	0	26	0.000	7.40E-03	**0.00E+00**
27	Transformer - Catastrophic	TY	0	1	0	9	0.000	6.00E-03	**0.00E+00**
28	Transformer - Non Catastrophic	TY	0	1	0	8	0.000	1.20E-02	**0.00E+00**
29	Yard Transformers (others)	TY	0	1	0	1	0.000	2.20E-03	**0.00E+00**
30	Boiler	TB	0	1	0	2	0.000	1.10E-03	**0.00E+00**
31	Cable Fires caused by welding and cutting (Turbine Building)	TB	0	1	0	224	0.000	1.60E-03	**0.00E+00**
32	Main Feedwater Pumps	TB	1	1	0	8	0.000	1.30E-02	**0.00E+00**
33	Turbine Generator Excitor	TB	0	1	0	1	0.000	3.90E-03	**0.00E+00**
34	Turbine Generator Hydrogen	TB	0	1	0	1	0.000	6.50E-03	**0.00E+00**
35	Turbine Generator Oil	TB	0	1	0	1	0.000	9.50E-03	**0.00E+00**
36	Transient fires caused by welding and cutting (Turbine Building)	TB	0	1	0	17	0.000	8.20E-03	**0.00E+00**
37	Transients (Turbine Building)	TB	0	1	0	17	0.000	8.50E-03	**0.00E+00**
Compartment Fire Frequency (FL)			**1.36E-03**	<= Special considerations: Include 1 transformer in bin 26b (not PRA components)					
Notes:									
(A) Number of Ignition Sources in Compartment									
(B) Total Number of Ignition Sources in Selected Plant Location or in Plant for Plant Wide Components									
*Ignition Source Frequency: FIF = WFL*WFIS*FF*									
Compartment Fire Frequency: FL = SUM(FIF)									

Table 12A-24

F3120 - Fire Compartment Ignition Source Data Sheet (ISDS)

Compartment Description									
	Fire Area		Fire Area F3120						
	Fire Compartment		F3120	Division 2 Electrical					
Compartment Fire Ignition Frequency									
Step 1.1	Plant Location ID		CAR						
	Plant Location Description		Control/Auxiliary/Reactor Building						
Step 1.2	Location Weighting Factor (WFL)		1.00E+00	Plant Location					
	Location Weighting Factor (WFL)		1.00E+00	Plant Wide Components					
Compartment Ignition Sources		Plant	App. to	Weighting	Sources in	Sources in	Weighting	Fire	**Ignition Source**
(FIF)		Location	This Area	Factor	Compartment	Plant Location	Factor	Frequency	**Frequency**
Bin #	Ignition Source	L	APP	WFL	(A)	(B)	WFIS=(A)/(B)	(FF)	**(FIF)**
01	Batteries	BR	1	1	0	21	0.000	7.50E-04	**0.00E+00**
02	Reactor Coolant Pump	COP	0	1	0	0	0.000	6.10E-03	**0.00E+00**
03	Transients and Hotwork	COP	0	1	0	0	0.000	2.00E-03	**0.00E+00**
04	Main Control Board	CR	0	1	0	0	0.000	2.50E-03	**0.00E+00**
05	Cable Fires caused by welding and cutting (Cntrl/Aux/Rx Building)	CAR	1	1	31	1166	0.027	1.60E-03	**4.25E-05**
06	Transient fires caused by welding and cutting (Cntrl/Aux/Rx Building)	CAR	1	1	1	53	0.019	9.70E-03	**1.83E-04**
07	Transients (Cntrl/Aux/Rx Building)	CAR	1	1	1	53	0.019	3.90E-03	**7.36E-05**
08	Diesel Generators	DGR	1	1	0	4	0.000	2.10E-02	**0.00E+00**
09	Air Compressors	XX	1	1	0	4	0.000	2.40E-03	**0.00E+00**
10	Battery Chargers	XX	1	1	0	15	0.000	1.80E-03	**0.00E+00**
11	Cable Fires caused by welding and cutting (Plant-Wide)	XX	0	1	0	430	0.000	2.00E-03	**0.00E+00**
12	Cable Run	XX	1	1	31	1820	0.017	4.40E-03	**7.49E-05**
13	Dryers	XX	1	1	0	2	0.000	2.60E-03	**0.00E+00**
14	Electric Motors	XX	1	1	0	8	0.000	4.60E-03	**0.00E+00**
15	Electrical Cabinets	XX	1	1	8	530	0.015	4.50E-02	**6.79E-04**
16	High Energy Arcing Faults	XX	1	1	2	77	0.026	1.50E-03	**3.90E-05**
17	Hydrogen Tanks	XX	1	1	0	2	0.000	1.70E-03	**0.00E+00**
18	Junction Boxes	XX	1	1	31	1820	0.017	1.90E-03	**3.24E-05**
19	Misc. Hydrogen Fires	XX	1	1	0	0	0.000	2.50E-03	**0.00E+00**
20	Off-gas/H2 Recombiner (BWR)	XX	1	1	0	2	0.000	4.40E-02	**0.00E+00**
21	Pumps	XX	1	1	0	43	0.000	2.10E-02	**0.00E+00**
22	RPS MG Sets	XX	0	1	0	0	0.000	1.60E-03	**0.00E+00**
23a	Transformers (oil filled)	XX	1	1	0	0	0.000	9.90E-03	**0.00E+00**
23b	Transformers (dry)	XX	1	1	1	67	0.015	9.90E-03	**1.48E-04**
24	Transient fires caused by welding and cutting (Plant-Wide)	XX	0	1	0	78	0.000	4.90E-03	**0.00E+00**
25	Transients (Plant-Wide)	XX	0	1	0	78	0.000	9.90E-03	**0.00E+00**
26	Ventilation Subsystems	XX	1	1	0	26	0.000	7.40E-03	**0.00E+00**
27	Transformer - Catastrophic	TY	0	1	0	9	0.000	6.00E-03	**0.00E+00**
28	Transformer - Non Catastrophic	TY	0	1	0	8	0.000	1.20E-02	**0.00E+00**
29	Yard Transformers (others)	TY	0	1	0	1	0.000	2.20E-03	**0.00E+00**
30	Boiler	TB	0	1	0	2	0.000	1.10E-03	**0.00E+00**
31	Cable Fires caused by welding and cutting (Turbine Building)	TB	0	1	0	224	0.000	1.60E-03	**0.00E+00**
32	Main Feedwater Pumps	TB	1	1	0	8	0.000	1.30E-02	**0.00E+00**
33	Turbine Generator Excitor	TB	0	1	0	1	0.000	3.90E-03	**0.00E+00**
34	Turbine Generator Hydrogen	TB	0	1	0	1	0.000	6.50E-03	**0.00E+00**
35	Turbine Generator Oil	TB	0	1	0	1	0.000	9.50E-03	**0.00E+00**
36	Transient fires caused by welding and cutting (Turbine Building)	TB	0	1	0	17	0.000	8.20E-03	**0.00E+00**
37	Transients (Turbine Building)	TB	0	1	0	17	0.000	8.50E-03	**0.00E+00**
Compartment Fire Frequency (FL)			**1.27E-03**	<= Special considerations: Include 1 transformer in bin 26b (not PRA components)					
Notes:									
(A) Number of Ignition Sources in Compartment									
(B) Total Number of Ignition Sources in Selected Plant Location or in Plant for Plant Wide Components									
*Ignition Source Frequency: FIF = WFL*WFIS*FF*									
Compartment Fire Frequency: FL = SUM(FIF)									

Table 12A-25

F3130 - Fire Compartment Ignition Source Data Sheet (ISDS)

Compartment Description									
	Fire Area		Fire Area F3130						
	Fire Compartment		F3130	Division 3 Electrical					
Compartment Fire Ignition Frequency									
Step 1.1	Plant Location ID		CAR						
	Plant Location Description		Control/Auxiliary/Reactor Building						
Step 1.2	Location Weighting Factor (WFL)		1.00E+00	Plant Location					
	Location Weighting Factor (WFL)		1.00E+00	Plant Wide Components					
Compartment Ignition Sources		Plant	App. to	Weighting	Sources in	Sources in	Weighting	Fire	**Ignition Source**
(FIF)		Location	This Area	Factor	Compartment	Plant Location	Factor	Frequency	**Frequency**
Bin #	Ignition Source	L	APP	WFL	(A)	(B)	WFIS=(A)/(B)	(FF)	**(FIF)**
01	Batteries	BR	1	1	0	21	0.000	7.50E-04	**0.00E+00**
02	Reactor Coolant Pump	COP	0	1	0	0	0.000	6.10E-03	**0.00E+00**
03	Transients and Hotwork	COP	0	1	0	0	0.000	2.00E-03	**0.00E+00**
04	Main Control Board	CR	0	1	0	0	0.000	2.50E-03	**0.00E+00**
05	Cable Fires caused by welding and cutting (Cntrl/Aux/Rx Building)	CAR	1	1	31	1166	0.027	1.60E-03	**4.25E-05**
06	Transient fires caused by welding and cutting (Cntrl/Aux/Rx Building)	CAR	1	1	1	53	0.019	9.70E-03	**1.83E-04**
07	Transients (Cntrl/Aux/Rx Building)	CAR	1	1	1	53	0.019	3.90E-03	**7.36E-05**
08	Diesel Generators	DGR	1	1	0	4	0.000	2.10E-02	**0.00E+00**
09	Air Compressors	XX	1	1	0	4	0.000	2.40E-03	**0.00E+00**
10	Battery Chargers	XX	1	1	0	15	0.000	1.80E-03	**0.00E+00**
11	Cable Fires caused by welding and cutting (Plant-Wide)	XX	0	1	0	430	0.000	2.00E-03	**0.00E+00**
12	Cable Run	XX	1	1	31	1820	0.017	4.40E-03	**7.49E-05**
13	Dryers	XX	1	1	0	2	0.000	2.60E-03	**0.00E+00**
14	Electric Motors	XX	1	1	0	8	0.000	4.60E-03	**0.00E+00**
15	Electrical Cabinets	XX	1	1	8	530	0.015	4.50E-02	**6.79E-04**
16	High Energy Arcing Faults	XX	1	1	2	77	0.026	1.50E-03	**3.90E-05**
17	Hydrogen Tanks	XX	1	1	0	2	0.000	1.70E-03	**0.00E+00**
18	Junction Boxes	XX	1	1	31	1820	0.017	1.90E-03	**3.24E-05**
19	Misc. Hydrogen Fires	XX	1	1	0	0	0.000	2.50E-03	**0.00E+00**
20	Off-gas/H2 Recombiner (BWR)	XX	1	1	0	2	0.000	4.40E-02	**0.00E+00**
21	Pumps	XX	1	1	0	43	0.000	2.10E-02	**0.00E+00**
22	RPS MG Sets	XX	0	1	0	0	0.000	1.60E-03	**0.00E+00**
23a	Transformers (oil filled)	XX	1	1	0	0	0.000	9.90E-03	**0.00E+00**
23b	Transformers (dry)	XX	1	1	1	67	0.015	9.90E-03	**1.48E-04**
24	Transient fires caused by welding and cutting (Plant-Wide)	XX	0	1	0	78	0.000	4.90E-03	**0.00E+00**
25	Transients (Plant-Wide)	XX	0	1	0	78	0.000	9.90E-03	**0.00E+00**
26	Ventilation Subsystems	XX	1	1	0	26	0.000	7.40E-03	**0.00E+00**
27	Transformer - Catastrophic	TY	0	1	0	9	0.000	6.00E-03	**0.00E+00**
28	Transformer - Non Catastrophic	TY	0	1	0	8	0.000	1.20E-02	**0.00E+00**
29	Yard Transformers (others)	TY	0	1	0	1	0.000	2.20E-03	**0.00E+00**
30	Boiler	TB	0	1	0	2	0.000	1.10E-03	**0.00E+00**
31	Cable Fires caused by welding and cutting (Turbine Building)	TB	0	1	0	224	0.000	1.60E-03	**0.00E+00**
32	Main Feedwater Pumps	TB	1	1	0	8	0.000	1.30E-02	**0.00E+00**
33	Turbine Generator Excitor	TB	0	1	0	1	0.000	3.90E-03	**0.00E+00**
34	Turbine Generator Hydrogen	TB	0	1	0	1	0.000	6.50E-03	**0.00E+00**
35	Turbine Generator Oil	TB	0	1	0	1	0.000	9.50E-03	**0.00E+00**
36	Transient fires caused by welding and cutting (Turbine Building)	TB	0	1	0	17	0.000	8.20E-03	**0.00E+00**
37	Transients (Turbine Building)	TB	0	1	0	17	0.000	8.50E-03	**0.00E+00**
Compartment Fire Frequency (FL)			**1.27E-03**	<= Special considerations: Include 1 transformer in bin 26b (not PRA components)					
Notes:									
(A) Number of Ignition Sources in Compartment									
(B) Total Number of Ignition Sources in Selected Plant Location or in Plant for Plant Wide Components									
*Ignition Source Frequency: FIF = WFL*WFIS*FF*									
Compartment Fire Frequency: FL = SUM(FIF)									

Table 12A-26

F3140 - Fire Compartment Ignition Source Data Sheet (ISDS)

Compartment Description									
	Fire Area		Fire Area F3140						
	Fire Compartment		F3140	Division 4 Electrical					
Compartment Fire Ignition Frequency									
Step 1.1	Plant Location ID		CAR						
	Plant Location Description		Control/Auxiliary/Reactor Building						
Step 1.2	Location Weighting Factor (WFL)		1.00E+00	Plant Location					
	Location Weighting Factor (WFL)		1.00E+00	Plant Wide Components					
Compartment Ignition Sources		Plant	App. to	Weighting	Sources in	Sources in	Weighting	Fire	**Ignition Source**
(FIF)		Location	This Area	Factor	Compartment	Plant Location	Factor	Frequency	**Frequency**
Bin #	Ignition Source	L	APP	WFL	(A)	(B)	WFIS=(A)/(B)	(FF)	**(FIF)**
01	Batteries	BR	1	1	0	21	0.000	7.50E-04	**0.00E+00**
02	Reactor Coolant Pump	COP	0	1	0	0	0.000	6.10E-03	**0.00E+00**
03	Transients and Hotwork	COP	0	1	0	0	0.000	2.00E-03	**0.00E+00**
04	Main Control Board	CR	0	1	0	0	0.000	2.50E-03	**0.00E+00**
05	Cable Fires caused by welding and cutting (Cntrl/Aux/Rx Building)	CAR	1	1	31	1166	0.027	1.60E-03	**4.25E-05**
06	Transient fires caused by welding and cutting (Cntrl/Aux/Rx Building)	CAR	1	1	1	53	0.019	9.70E-03	**1.83E-04**
07	Transients (Cntrl/Aux/Rx Building)	CAR	1	1	1	53	0.019	3.90E-03	**7.36E-05**
08	Diesel Generators	DGR	1	1	0	4	0.000	2.10E-02	**0.00E+00**
09	Air Compressors	XX	1	1	0	4	0.000	2.40E-03	**0.00E+00**
10	Battery Chargers	XX	1	1	0	15	0.000	1.80E-03	**0.00E+00**
11	Cable Fires caused by welding and cutting (Plant-Wide)	XX	0	1	0	430	0.000	2.00E-03	**0.00E+00**
12	Cable Run	XX	1	1	31	1820	0.017	4.40E-03	**7.49E-05**
13	Dryers	XX	1	1	0	2	0.000	2.60E-03	**0.00E+00**
14	Electric Motors	XX	1	1	0	8	0.000	4.60E-03	**0.00E+00**
15	Electrical Cabinets	XX	1	1	8	530	0.015	4.50E-02	**6.79E-04**
16	High Energy Arcing Faults	XX	1	1	2	77	0.026	1.50E-03	**3.90E-05**
17	Hydrogen Tanks	XX	1	1	0	2	0.000	1.70E-03	**0.00E+00**
18	Junction Boxes	XX	1	1	31	1820	0.017	1.90E-03	**3.24E-05**
19	Misc. Hydrogen Fires	XX	1	1	0	0	0.000	2.50E-03	**0.00E+00**
20	Off-gas/H2 Recombiner (BWR)	XX	1	1	0	2	0.000	4.40E-02	**0.00E+00**
21	Pumps	XX	1	1	0	43	0.000	2.10E-02	**0.00E+00**
22	RPS MG Sets	XX	0	1	0	0	0.000	1.60E-03	**0.00E+00**
23a	Transformers (oil filled)	XX	1	1	0	0	0.000	9.90E-03	**0.00E+00**
23b	Transformers (dry)	XX	1	1	1	67	0.015	9.90E-03	**1.48E-04**
24	Transient fires caused by welding and cutting (Plant-Wide)	XX	0	1	0	78	0.000	4.90E-03	**0.00E+00**
25	Transients (Plant-Wide)	XX	0	1	0	78	0.000	9.90E-03	**0.00E+00**
26	Ventilation Subsystems	XX	1	1	0	26	0.000	7.40E-03	**0.00E+00**
27	Transformer - Catastrophic	TY	0	1	0	9	0.000	6.00E-03	**0.00E+00**
28	Transformer - Non Catastrophic	TY	0	1	0	8	0.000	1.20E-02	**0.00E+00**
29	Yard Transformers (others)	TY	0	1	0	1	0.000	2.20E-03	**0.00E+00**
30	Boiler	TB	0	1	0	2	0.000	1.10E-03	**0.00E+00**
31	Cable Fires caused by welding and cutting (Turbine Building)	TB	0	1	0	224	0.000	1.60E-03	**0.00E+00**
32	Main Feedwater Pumps	TB	1	1	0	8	0.000	1.30E-02	**0.00E+00**
33	Turbine Generator Excitor	TB	0	1	0	1	0.000	3.90E-03	**0.00E+00**
34	Turbine Generator Hydrogen	TB	0	1	0	1	0.000	6.50E-03	**0.00E+00**
35	Turbine Generator Oil	TB	0	1	0	1	0.000	9.50E-03	**0.00E+00**
36	Transient fires caused by welding and cutting (Turbine Building)	TB	0	1	0	17	0.000	8.20E-03	**0.00E+00**
37	Transients (Turbine Building)	TB	0	1	0	17	0.000	8.50E-03	**0.00E+00**
Compartment Fire Frequency (FL)			**1.27E-03**	<= Special considerations: Include 1 transformer in bin 26b (not PRA components)					
Notes:									
(A) Number of Ignition Sources in Compartment									
(B) Total Number of Ignition Sources in Selected Plant Location or in Plant for Plant Wide Components									
*Ignition Source Frequency: FIF = WFL*WFIS*FF*									
Compartment Fire Frequency: FL = SUM(FIF)									

Table 12A-27

F3150 - Fire Compartment Ignition Source Data Sheet (ISDS)

Compartment Description									
	Fire Area		Fire Area F3150						
	Fire Compartment		F3150	DPS Control Room					
Compartment Fire Ignition Frequency									
Step 1.1	Plant Location ID		CAR						
	Plant Location Description		Control/Auxiliary/Reactor Building						
Step 1.2	Location Weighting Factor (WFL)		1.00E+00	Plant Location					
	Location Weighting Factor (WFL)		1.00E+00	Plant Wide Components					
Compartment Ignition Sources		Plant	App. to	Weighting	Sources in	Sources in	Weighting	Fire	**Ignition Source**
(FIF)		Location	This Area	Factor	Compartment	Plant Location	Factor	Frequency	**Frequency**
Bin #	Ignition Source	L	APP	WFL	(A)	(B)	WFIS=(A)/(B)	(FF)	**(FIF)**
01	Batteries	BR	1	1	0	21	0.000	7.50E-04	**0.00E+00**
02	Reactor Coolant Pump	COP	0	1	0	0	0.000	6.10E-03	**0.00E+00**
03	Transients and Hotwork	COP	0	1	0	0	0.000	2.00E-03	**0.00E+00**
04	Main Control Board	CR	0	1	0	0	0.000	2.50E-03	**0.00E+00**
05	Cable Fires caused by welding and cutting (Cntrl/Aux/Rx Building)	CAR	1	1	15	1166	0.013	1.60E-03	**2.06E-05**
06	Transient fires caused by welding and cutting (Cntrl/Aux/Rx Building)	CAR	1	1	1	53	0.019	9.70E-03	**1.83E-04**
07	Transients (Cntrl/Aux/Rx Building)	CAR	1	1	1	53	0.019	3.90E-03	**7.36E-05**
08	Diesel Generators	DGR	1	1	0	4	0.000	2.10E-02	**0.00E+00**
09	Air Compressors	XX	1	1	0	4	0.000	2.40E-03	**0.00E+00**
10	Battery Chargers	XX	1	1	0	15	0.000	1.80E-03	**0.00E+00**
11	Cable Fires caused by welding and cutting (Plant-Wide)	XX	0	1	0	430	0.000	2.00E-03	**0.00E+00**
12	Cable Run	XX	1	1	15	1820	0.008	4.40E-03	**3.63E-05**
13	Dryers	XX	1	1	0	2	0.000	2.60E-03	**0.00E+00**
14	Electric Motors	XX	1	1	0	8	0.000	4.60E-03	**0.00E+00**
15	Electrical Cabinets	XX	1	1	0	530	0.000	4.50E-02	**0.00E+00**
16	High Energy Arcing Faults	XX	1	1	0	77	0.000	1.50E-03	**0.00E+00**
17	Hydrogen Tanks	XX	1	1	0	2	0.000	1.70E-03	**0.00E+00**
18	Junction Boxes	XX	1	1	15	1820	0.008	1.90E-03	**1.57E-05**
19	Misc. Hydrogen Fires	XX	1	1	0	0	0.000	2.50E-03	**0.00E+00**
20	Off-gas/H2 Recombiner (BWR)	XX	1	1	0	2	0.000	4.40E-02	**0.00E+00**
21	Pumps	XX	1	1	0	43	0.000	2.10E-02	**0.00E+00**
22	RPS MG Sets	XX	0	1	0	0	0.000	1.60E-03	**0.00E+00**
23a	Transformers (oil filled)	XX	1	1	0	0	0.000	9.90E-03	**0.00E+00**
23b	Transformers (dry)	XX	1	1	0	67	0.000	9.90E-03	**0.00E+00**
24	Transient fires caused by welding and cutting (Plant-Wide)	XX	0	1	0	78	0.000	4.90E-03	**0.00E+00**
25	Transients (Plant-Wide)	XX	0	1	0	78	0.000	9.90E-03	**0.00E+00**
26	Ventilation Subsystems	XX	1	1	0	26	0.000	7.40E-03	**0.00E+00**
27	Transformer - Catastrophic	TY	0	1	0	9	0.000	6.00E-03	**0.00E+00**
28	Transformer - Non Catastrophic	TY	0	1	0	8	0.000	1.20E-02	**0.00E+00**
29	Yard Transformers (others)	TY	0	1	0	1	0.000	2.20E-03	**0.00E+00**
30	Boiler	TB	0	1	0	2	0.000	1.10E-03	**0.00E+00**
31	Cable Fires caused by welding and cutting (Turbine Building)	TB	0	1	0	224	0.000	1.60E-03	**0.00E+00**
32	Main Feedwater Pumps	TB	1	1	0	8	0.000	1.30E-02	**0.00E+00**
33	Turbine Generator Excitor	TB	0	1	0	1	0.000	3.90E-03	**0.00E+00**
34	Turbine Generator Hydrogen	TB	0	1	0	1	0.000	6.50E-03	**0.00E+00**
35	Turbine Generator Oil	TB	0	1	0	1	0.000	9.50E-03	**0.00E+00**
36	Transient fires caused by welding and cutting (Turbine Building)	TB	0	1	0	17	0.000	8.20E-03	**0.00E+00**
37	Transients (Turbine Building)	TB	0	1	0	17	0.000	8.50E-03	**0.00E+00**
Compartment Fire Frequency (FL)			**3.29E-04**						
Notes:									
(A) Number of Ignition Sources in Compartment									
(B) Total Number of Ignition Sources in Selected Plant Location or in Plant for Plant Wide Components									
*Ignition Source Frequency: FIF = WFL*WFIS*FF*									
Compartment Fire Frequency: FL = SUM(FIF)									

Table 12A-28

F3270 - Fire Compartment Ignition Source Data Sheet (ISDS)

Compartment Description									
	Fire Area		Fire Area F3270						
	Fire Compartment		F3270	Main Control Room Complex					
Compartment Fire Ignition Frequency									
Step 1.1	Plant Location ID		CR						
	Plant Location Description		Control Room						
Step 1.2	Location Weighting Factor (WFL)		1.00E+00	Plant Location					
	Location Weighting Factor (WFL)		1.00E+00	Plant Wide Components					
Compartment Ignition Sources		Plant	App. to	Weighting	Sources in	Sources in	Weighting	Fire	**Ignition Source**
(FIF)		Location	This Area	Factor	Compartment	Plant Location	Factor	Frequency	**Frequency**
Bin #	Ignition Source	L	APP	WFL	(A)	(B)	WFIS=(A)/(B)	(FF)	**(FIF)**
01	Batteries	BR	1	1	0	21	0.000	7.50E-04	**0.00E+00**
02	Reactor Coolant Pump	COP	0	1	0	0	0.000	6.10E-03	**0.00E+00**
03	Transients and Hotwork	COP	0	1	0	0	0.000	2.00E-03	**0.00E+00**
04	Main Control Board	CR	1	1	7	0	0.000	2.50E-03	**0.00E+00**
05	Cable Fires caused by welding and cutting (Cntrl/Aux/Rx Building)	CAR	0	1	0	1166	0.000	1.60E-03	**0.00E+00**
06	Transient fires caused by welding and cutting (Cntrl/Aux/Rx Building)	CAR	1	1	1	53	0.019	9.70E-03	**1.83E-04**
07	Transients (Cntrl/Aux/Rx Building)	CAR	1	1	10	53	0.189	3.90E-03	**7.36E-04**
08	Diesel Generators	DGR	1	1	0	4	0.000	2.10E-02	**0.00E+00**
09	Air Compressors	XX	1	1	0	4	0.000	2.40E-03	**0.00E+00**
10	Battery Chargers	XX	1	1	0	15	0.000	1.80E-03	**0.00E+00**
11	Cable Fires caused by welding and cutting (Plant-Wide)	XX	1	1	0	430	0.000	2.00E-03	**0.00E+00**
12	Cable Run	XX	1	1	0	1820	0.000	4.40E-03	**0.00E+00**
13	Dryers	XX	1	1	0	2	0.000	2.60E-03	**0.00E+00**
14	Electric Motors	XX	1	1	0	8	0.000	4.60E-03	**0.00E+00**
15	Electrical Cabinets	XX	1	1	13	530	0.025	4.50E-02	**1.10E-03**
16	High Energy Arcing Faults	XX	1	1	0	77	0.000	1.50E-03	**0.00E+00**
17	Hydrogen Tanks	XX	1	1	0	2	0.000	1.70E-03	**0.00E+00**
18	Junction Boxes	XX	1	1	0	1820	0.000	1.90E-03	**0.00E+00**
19	Misc. Hydrogen Fires	XX	1	1	0	0	0.000	2.50E-03	**0.00E+00**
20	Off-gas/H2 Recombiner (BWR)	XX	1	1	0	2	0.000	4.40E-02	**0.00E+00**
21	Pumps	XX	1	1	0	43	0.000	2.10E-02	**0.00E+00**
22	RPS MG Sets	XX	0	1	0	0	0.000	1.60E-03	**0.00E+00**
23a	Transformers (oil filled)	XX	1	1	0	0	0.000	9.90E-03	**0.00E+00**
23b	Transformers (dry)	XX	1	1	0	67	0.000	9.90E-03	**0.00E+00**
24	Transient fires caused by welding and cutting (Plant-Wide)	XX	0	1	0	78	0.000	4.90E-03	**0.00E+00**
25	Transients (Plant-Wide)	XX	0	1	0	78	0.000	9.90E-03	**0.00E+00**
26	Ventilation Subsystems	XX	1	1	2	26	0.077	7.40E-03	**5.69E-04**
27	Transformer - Catastrophic	TY	0	1	0	9	0.000	6.00E-03	**0.00E+00**
28	Transformer - Non Catastrophic	TY	0	1	0	8	0.000	1.20E-02	**0.00E+00**
29	Yard Transformers (others)	TY	0	1	0	1	0.000	2.20E-03	**0.00E+00**
30	Boiler	TB	0	1	0	2	0.000	1.10E-03	**0.00E+00**
31	Cable Fires caused by welding and cutting (Turbine Building)	TB	0	1	0	224	0.000	1.60E-03	**0.00E+00**
32	Main Feedwater Pumps	TB	1	1	0	8	0.000	1.30E-02	**0.00E+00**
33	Turbine Generator Excitor	TB	0	1	0	1	0.000	3.90E-03	**0.00E+00**
34	Turbine Generator Hydrogen	TB	0	1	0	1	0.000	6.50E-03	**0.00E+00**
35	Turbine Generator Oil	TB	0	1	0	1	0.000	9.50E-03	**0.00E+00**
36	Transient fires caused by welding and cutting (Turbine Building)	TB	0	1	0	17	0.000	8.20E-03	**0.00E+00**
37	Transients (Turbine Building)	TB	0	1	0	17	0.000	8.50E-03	**0.00E+00**
Compartment Fire Frequency (FL)			**2.59E-03**	<= Special considerations: Transients (bin 7) counted as 10. Assume the main control boards are applicable. Include 2 AHUs in MCR (not PRA components)					
Notes:									
(A) Number of Ignition Sources in Compartment									
(B) Total Number of Ignition Sources in Selected Plant Location or in Plant for Plant Wide Components									
*Ignition Source Frequency: FIF = WFL*WFIS*FF*									
Compartment Fire Frequency: FL = SUM(FIF)									

Table 12A-29

F3301 - Fire Compartment Ignition Source Data Sheet (ISDS)

Compartment Description									
	Fire Area		Fire Area F3301						
	Fire Compartment		F3301	Nonsafety-Related Electrical Train A					
Compartment Fire Ignition Frequency									
Step 1.1	Plant Location ID		CAR						
	Plant Location Description		Control/Auxiliary/Reactor Building						
Step 1.2	Location Weighting Factor (WFL)		1.00E+00	Plant Location					
	Location Weighting Factor (WFL)		1.00E+00	Plant Wide Components					
Compartment Ignition Sources		Plant	App. to	Weighting	Sources in	Sources in	Weighting	Fire	**Ignition Source**
(FIF)		Location	This Area	Factor	Compartment	Plant Location	Factor	Frequency	**Frequency**
Bin #	Ignition Source	L	APP	WFL	(A)	(B)	WFIS=(A)/(B)	(FF)	**(FIF)**
01	Batteries	BR	1	1	0	21	0.000	7.50E-04	**0.00E+00**
02	Reactor Coolant Pump	COP	0	1	0	0	0.000	6.10E-03	**0.00E+00**
03	Transients and Hotwork	COP	0	1	0	0	0.000	2.00E-03	**0.00E+00**
04	Main Control Board	CR	0	1	0	0	0.000	2.50E-03	**0.00E+00**
05	Cable Fires caused by welding and cutting (Cntrl/Aux/Rx Building)	CAR	1	1	75	1166	0.064	1.60E-03	**1.03E-04**
06	Transient fires caused by welding and cutting (Cntrl/Aux/Rx Building)	CAR	1	1	1	53	0.019	9.70E-03	**1.83E-04**
07	Transients (Cntrl/Aux/Rx Building)	CAR	1	1	1	53	0.019	3.90E-03	**7.36E-05**
08	Diesel Generators	DGR	1	1	0	4	0.000	2.10E-02	**0.00E+00**
09	Air Compressors	XX	1	1	0	4	0.000	2.40E-03	**0.00E+00**
10	Battery Chargers	XX	1	1	0	15	0.000	1.80E-03	**0.00E+00**
11	Cable Fires caused by welding and cutting (Plant-Wide)	XX	0	1	0	430	0.000	2.00E-03	**0.00E+00**
12	Cable Run	XX	1	1	75	1820	0.041	4.40E-03	**1.81E-04**
13	Dryers	XX	1	1	0	2	0.000	2.60E-03	**0.00E+00**
14	Electric Motors	XX	1	1	0	8	0.000	4.60E-03	**0.00E+00**
15	Electrical Cabinets	XX	1	1	43	530	0.081	4.50E-02	**3.65E-03**
16	High Energy Arcing Faults	XX	1	1	0	77	0.000	1.50E-03	**0.00E+00**
17	Hydrogen Tanks	XX	1	1	0	2	0.000	1.70E-03	**0.00E+00**
18	Junction Boxes	XX	1	1	75	1820	0.041	1.90E-03	**7.83E-05**
19	Misc. Hydrogen Fires	XX	1	1	0	0	0.000	2.50E-03	**0.00E+00**
20	Off-gas/H2 Recombiner (BWR)	XX	1	1	0	2	0.000	4.40E-02	**0.00E+00**
21	Pumps	XX	1	1	0	43	0.000	2.10E-02	**0.00E+00**
22	RPS MG Sets	XX	0	1	0	0	0.000	1.60E-03	**0.00E+00**
23a	Transformers (oil filled)	XX	1	1	0	0	0.000	9.90E-03	**0.00E+00**
23b	Transformers (dry)	XX	1	1	1	67	0.015	9.90E-03	**1.48E-04**
24	Transient fires caused by welding and cutting (Plant-Wide)	XX	0	1	0	78	0.000	4.90E-03	**0.00E+00**
25	Transients (Plant-Wide)	XX	0	1	0	78	0.000	9.90E-03	**0.00E+00**
26	Ventilation Subsystems	XX	1	1	0	26	0.000	7.40E-03	**0.00E+00**
27	Transformer - Catastrophic	TY	0	1	0	9	0.000	6.00E-03	**0.00E+00**
28	Transformer - Non Catastrophic	TY	0	1	0	8	0.000	1.20E-02	**0.00E+00**
29	Yard Transformers (others)	TY	0	1	0	1	0.000	2.20E-03	**0.00E+00**
30	Boiler	TB	0	1	0	2	0.000	1.10E-03	**0.00E+00**
31	Cable Fires caused by welding and cutting (Turbine Building)	TB	0	1	0	224	0.000	1.60E-03	**0.00E+00**
32	Main Feedwater Pumps	TB	1	1	0	8	0.000	1.30E-02	**0.00E+00**
33	Turbine Generator Excitor	TB	0	1	0	1	0.000	3.90E-03	**0.00E+00**
34	Turbine Generator Hydrogen	TB	0	1	0	1	0.000	6.50E-03	**0.00E+00**
35	Turbine Generator Oil	TB	0	1	0	1	0.000	9.50E-03	**0.00E+00**
36	Transient fires caused by welding and cutting (Turbine Building)	TB	0	1	0	17	0.000	8.20E-03	**0.00E+00**
37	Transients (Turbine Building)	TB	0	1	0	17	0.000	8.50E-03	**0.00E+00**
Compartment Fire Frequency (FL)			**4.42E-03**	<= Special considerations: Include 1 transformer in bin 26b (not PRA components)					
Notes:									
(A) Number of Ignition Sources in Compartment									
(B) Total Number of Ignition Sources in Selected Plant Location or in Plant for Plant Wide Components									
*Ignition Source Frequency: FIF = WFL*WFIS*FF*									
Compartment Fire Frequency: FL = SUM(FIF)									

Table 12A-30

F3302 - Fire Compartment Ignition Source Data Sheet (ISDS)

Compartment Description									
	Fire Area		Fire Area F3302						
	Fire Compartment		F3302	Nonsafety-Related Electrical Train B					
Compartment Fire Ignition Frequency									
Step 1.1	Plant Location ID		CAR						
	Plant Location Description		Control/Auxiliary/Reactor Building						
Step 1.2	Location Weighting Factor (WFL)		1.00E+00	Plant Location					
	Location Weighting Factor (WFL)		1.00E+00	Plant Wide Components					
Compartment Ignition Sources		Plant	App. to	Weighting	Sources in	Sources in	Weighting	Fire	**Ignition Source**
(FIF)		Location	This Area	Factor	Compartment	Plant Location	Factor	Frequency	**Frequency**
Bin #	Ignition Source	L	APP	WFL	(A)	(B)	WFIS=(A)/(B)	(FF)	**(FIF)**
01	Batteries	BR	1	1	0	21	0.000	7.50E-04	**0.00E+00**
02	Reactor Coolant Pump	COP	0	1	0	0	0.000	6.10E-03	**0.00E+00**
03	Transients and Hotwork	COP	0	1	0	0	0.000	2.00E-03	**0.00E+00**
04	Main Control Board	CR	0	1	0	0	0.000	2.50E-03	**0.00E+00**
05	Cable Fires caused by welding and cutting (Cntrl/Aux/Rx Building)	CAR	1	1	94	1166	0.081	1.60E-03	**1.29E-04**
06	Transient fires caused by welding and cutting (Cntrl/Aux/Rx Building)	CAR	1	1	1	53	0.019	9.70E-03	**1.83E-04**
07	Transients (Cntrl/Aux/Rx Building)	CAR	1	1	1	53	0.019	3.90E-03	**7.36E-05**
08	Diesel Generators	DGR	1	1	0	4	0.000	2.10E-02	**0.00E+00**
09	Air Compressors	XX	1	1	0	4	0.000	2.40E-03	**0.00E+00**
10	Battery Chargers	XX	1	1	0	15	0.000	1.80E-03	**0.00E+00**
11	Cable Fires caused by welding and cutting (Plant-Wide)	XX	0	1	0	430	0.000	2.00E-03	**0.00E+00**
12	Cable Run	XX	1	1	94	1820	0.052	4.40E-03	**2.27E-04**
13	Dryers	XX	1	1	0	2	0.000	2.60E-03	**0.00E+00**
14	Electric Motors	XX	1	1	0	8	0.000	4.60E-03	**0.00E+00**
15	Electrical Cabinets	XX	1	1	51	530	0.096	4.50E-02	**4.33E-03**
16	High Energy Arcing Faults	XX	1	1	0	77	0.000	1.50E-03	**0.00E+00**
17	Hydrogen Tanks	XX	1	1	0	2	0.000	1.70E-03	**0.00E+00**
18	Junction Boxes	XX	1	1	94	1820	0.052	1.90E-03	**9.81E-05**
19	Misc. Hydrogen Fires	XX	1	1	0	0	0.000	2.50E-03	**0.00E+00**
20	Off-gas/H2 Recombiner (BWR)	XX	1	1	0	2	0.000	4.40E-02	**0.00E+00**
21	Pumps	XX	1	1	0	43	0.000	2.10E-02	**0.00E+00**
22	RPS MG Sets	XX	0	1	0	0	0.000	1.60E-03	**0.00E+00**
23a	Transformers (oil filled)	XX	1	1	0	0	0.000	9.90E-03	**0.00E+00**
23b	Transformers (dry)	XX	1	1	1	67	0.015	9.90E-03	**1.48E-04**
24	Transient fires caused by welding and cutting (Plant-Wide)	XX	0	1	0	78	0.000	4.90E-03	**0.00E+00**
25	Transients (Plant-Wide)	XX	0	1	0	78	0.000	9.90E-03	**0.00E+00**
26	Ventilation Subsystems	XX	1	1	0	26	0.000	7.40E-03	**0.00E+00**
27	Transformer - Catastrophic	TY	0	1	0	9	0.000	6.00E-03	**0.00E+00**
28	Transformer - Non Catastrophic	TY	0	1	0	8	0.000	1.20E-02	**0.00E+00**
29	Yard Transformers (others)	TY	0	1	0	1	0.000	2.20E-03	**0.00E+00**
30	Boiler	TB	0	1	0	2	0.000	1.10E-03	**0.00E+00**
31	Cable Fires caused by welding and cutting (Turbine Building)	TB	0	1	0	224	0.000	1.60E-03	**0.00E+00**
32	Main Feedwater Pumps	TB	1	1	0	8	0.000	1.30E-02	**0.00E+00**
33	Turbine Generator Excitor	TB	0	1	0	1	0.000	3.90E-03	**0.00E+00**
34	Turbine Generator Hydrogen	TB	0	1	0	1	0.000	6.50E-03	**0.00E+00**
35	Turbine Generator Oil	TB	0	1	0	1	0.000	9.50E-03	**0.00E+00**
36	Transient fires caused by welding and cutting (Turbine Building)	TB	0	1	0	17	0.000	8.20E-03	**0.00E+00**
37	Transients (Turbine Building)	TB	0	1	0	17	0.000	8.50E-03	**0.00E+00**
Compartment Fire Frequency (FL)			**5.19E-03**	<= Special considerations: Include 1 transformer in bin 26b (not PRA components)					
Notes:									
(A) Number of Ignition Sources in Compartment									
(B) Total Number of Ignition Sources in Selected Plant Location or in Plant for Plant Wide Components									
*Ignition Source Frequency: FIF = WFL*WFIS*FF*									
Compartment Fire Frequency: FL = SUM(FIF)									

Table 12A-31

F4197 - Fire Compartment Ignition Source Data Sheet (ISDS)

Compartment Description									
	Fire Area		Fire Area F4197						
	Fire Compartment		F4197	Turbine Equipment					
Compartment Fire Ignition Frequency									
Step 1.1	Plant Location ID		TB						
	Plant Location Description		Turbine Building						
Step 1.2	Location Weighting Factor (WFL)		1.00E+00	Plant Location					
	Location Weighting Factor (WFL)		1.00E+00	Plant Wide Components					
Compartment Ignition Sources (FIF)		Plant Location	App. to This Area	Weighting Factor	Sources in Compartment	Sources in Plant Location	Weighting Factor	Fire Frequency	**Ignition Source Frequency**
Bin #	Ignition Source	L	APP	WFL	(A)	(B)	WFIS=(A)/(B)	(FF)	**(FIF)**
01	Batteries	BR	1	1	0	21	0.000	7.50E-04	**0.00E+00**
02	Reactor Coolant Pump	COP	0	1	0	0	0.000	6.10E-03	**0.00E+00**
03	Transients and Hotwork	COP	0	1	0	0	0.000	2.00E-03	**0.00E+00**
04	Main Control Board	CR	0	1	0	0	0.000	2.50E-03	**0.00E+00**
05	Cable Fires caused by welding and cutting (Cntrl/Aux/Rx Building)	CAR	0	1	0	1166	0.000	1.60E-03	**0.00E+00**
06	Transient fires caused by welding and cutting (Cntrl/Aux/Rx Building)	CAR	0	1	0	53	0.000	9.70E-03	**0.00E+00**
07	Transients (Cntrl/Aux/Rx Building)	CAR	0	1	0	53	0.000	3.90E-03	**0.00E+00**
08	Diesel Generators	DGR	1	1	0	4	0.000	2.10E-02	**0.00E+00**
09	Air Compressors	XX	1	1	0	4	0.000	2.40E-03	**0.00E+00**
10	Battery Chargers	XX	1	1	0	15	0.000	1.80E-03	**0.00E+00**
11	Cable Fires caused by welding and cutting (Plant-Wide)	XX	0	1	0	430	0.000	2.00E-03	**0.00E+00**
12	Cable Run	XX	1	1	176	1820	0.097	4.40E-03	**4.25E-04**
13	Dryers	XX	1	1	0	2	0.000	2.60E-03	**0.00E+00**
14	Electric Motors	XX	1	1	0	8	0.000	4.60E-03	**0.00E+00**
15	Electrical Cabinets	XX	1	1	49	530	0.092	4.50E-02	**4.16E-03**
16	High Energy Arcing Faults	XX	1	1	4	77	0.052	1.50E-03	**7.79E-05**
17	Hydrogen Tanks	XX	1	1	0	2	0.000	1.70E-03	**0.00E+00**
18	Junction Boxes	XX	1	1	176	1820	0.097	1.90E-03	**1.84E-04**
19	Misc. Hydrogen Fires	XX	1	1	0	0	0.000	2.50E-03	**0.00E+00**
20	Off-gas/H2 Recombiner (BWR)	XX	1	1	0	2	0.000	4.40E-02	**0.00E+00**
21	Pumps	XX	1	1	10	43	0.233	2.10E-02	**4.88E-03**
22	RPS MG Sets	XX	0	1	0	0	0.000	1.60E-03	**0.00E+00**
23a	Transformers (oil filled)	XX	1	1	0	0	0.000	9.90E-03	**0.00E+00**
23b	Transformers (dry)	XX	1	1	4	67	0.060	9.90E-03	**5.91E-04**
24	Transient fires caused by welding and cutting (Plant-Wide)	XX	0	1	0	78	0.000	4.90E-03	**0.00E+00**
25	Transients (Plant-Wide)	XX	0	1	0	78	0.000	9.90E-03	**0.00E+00**
26	Ventilation Subsystems	XX	1	1	4	26	0.154	7.40E-03	**1.14E-03**
27	Transformer - Catastrophic	TY	0	1	0	9	0.000	6.00E-03	**0.00E+00**
28	Transformer - Non Catastrophic	TY	0	1	0	8	0.000	1.20E-02	**0.00E+00**
29	Yard Transformers (others)	TY	0	1	0	1	0.000	2.20E-03	**0.00E+00**
30	Boiler	TB	1	1	0	2	0.000	1.10E-03	**0.00E+00**
31	Cable Fires caused by welding and cutting (Turbine Building)	TB	1	1	176	224	0.786	1.60E-03	**1.26E-03**
32	Main Feedwater Pumps	TB	1	1	8	8	1.000	1.30E-02	**1.30E-02**
33	Turbine Generator Excitor	TB	1	1	1	1	1.000	3.90E-03	**3.90E-03**
34	Turbine Generator Hydrogen	TB	1	1	1	1	1.000	6.50E-03	**6.50E-03**
35	Turbine Generator Oil	TB	1	1	0	1	0.000	9.50E-03	**0.00E+00**
36	Transient fires caused by welding and cutting (Turbine Building)	TB	1	1	10	17	0.588	8.20E-03	**4.82E-03**
37	Transients (Turbine Building)	TB	1	1	10	17	0.588	8.50E-03	**5.00E-03**
Compartment Fire Frequency (FL)			**4.59E-02**	<= Special considerations: Transients (bin 36 & 37) counted as 10.					
Notes:									
(A) Number of Ignition Sources in Compartment									
(B) Total Number of Ignition Sources in Selected Plant Location or in Plant for Plant Wide Components									
*Ignition Source Frequency: FIF = WFL*WFIS*FF*									
Compartment Fire Frequency: FL = SUM(FIF)									

Table 12A-32

F4250 - Fire Compartment Ignition Source Data Sheet (ISDS)

Compartment Description									
	Fire Area		Fire Area F4250						
	Fire Compartment		F4250	Reactor Component Cooling Water A					
Compartment Fire Ignition Frequency									
Step 1.1	Plant Location ID		TB						
	Plant Location Description		Turbine Building						
Step 1.2	Location Weighting Factor (WFL)		1.00E+00	Plant Location					
	Location Weighting Factor (WFL)		1.00E+00	Plant Wide Components					
Compartment Ignition Sources		Plant	App. to	Weighting	Sources in	Sources in	Weighting	Fire	**Ignition Source**
(FIF)		Location	This Area	Factor	Compartment	Plant Location	Factor	Frequency	**Frequency**
Bin #	Ignition Source	L	APP	WFL	(A)	(B)	WFIS=(A)/(B)	(FF)	**(FIF)**
01	Batteries	BR	1	1	0	21	0.000	7.50E-04	**0.00E+00**
02	Reactor Coolant Pump	COP	0	1	0	0	0.000	6.10E-03	**0.00E+00**
03	Transients and Hotwork	COP	0	1	0	0	0.000	2.00E-03	**0.00E+00**
04	Main Control Board	CR	0	1	0	0	0.000	2.50E-03	**0.00E+00**
05	Cable Fires caused by welding and cutting (Cntrl/Aux/Rx Building)	CAR	0	1	0	1166	0.000	1.60E-03	**0.00E+00**
06	Transient fires caused by welding and cutting (Cntrl/Aux/Rx Building)	CAR	0	1	0	53	0.000	9.70E-03	**0.00E+00**
07	Transients (Cntrl/Aux/Rx Building)	CAR	0	1	0	53	0.000	3.90E-03	**0.00E+00**
08	Diesel Generators	DGR	1	1	0	4	0.000	2.10E-02	**0.00E+00**
09	Air Compressors	XX	1	1	0	4	0.000	2.40E-03	**0.00E+00**
10	Battery Chargers	XX	1	1	0	15	0.000	1.80E-03	**0.00E+00**
11	Cable Fires caused by welding and cutting (Plant-Wide)	XX	0	1	0	430	0.000	2.00E-03	**0.00E+00**
12	Cable Run	XX	1	1	17	1820	0.009	4.40E-03	**4.11E-05**
13	Dryers	XX	1	1	0	2	0.000	2.60E-03	**0.00E+00**
14	Electric Motors	XX	1	1	0	8	0.000	4.60E-03	**0.00E+00**
15	Electrical Cabinets	XX	1	1	2	530	0.004	4.50E-02	**1.70E-04**
16	High Energy Arcing Faults	XX	1	1	0	77	0.000	1.50E-03	**0.00E+00**
17	Hydrogen Tanks	XX	1	1	0	2	0.000	1.70E-03	**0.00E+00**
18	Junction Boxes	XX	1	1	17	1820	0.009	1.90E-03	**1.77E-05**
19	Misc. Hydrogen Fires	XX	1	1	0	0	0.000	2.50E-03	**0.00E+00**
20	Off-gas/H2 Recombiner (BWR)	XX	1	1	0	2	0.000	4.40E-02	**0.00E+00**
21	Pumps	XX	1	1	3	43	0.070	2.10E-02	**1.47E-03**
22	RPS MG Sets	XX	0	1	0	0	0.000	1.60E-03	**0.00E+00**
23a	Transformers (oil filled)	XX	1	1	0	0	0.000	9.90E-03	**0.00E+00**
23b	Transformers (dry)	XX	1	1	0	67	0.000	9.90E-03	**0.00E+00**
24	Transient fires caused by welding and cutting (Plant-Wide)	XX	0	1	0	78	0.000	4.90E-03	**0.00E+00**
25	Transients (Plant-Wide)	XX	0	1	0	78	0.000	9.90E-03	**0.00E+00**
26	Ventilation Subsystems	XX	1	1	1	26	0.038	7.40E-03	**2.85E-04**
27	Transformer - Catastrophic	TY	0	1	0	9	0.000	6.00E-03	**0.00E+00**
28	Transformer - Non Catastrophic	TY	0	1	0	8	0.000	1.20E-02	**0.00E+00**
29	Yard Transformers (others)	TY	0	1	0	1	0.000	2.20E-03	**0.00E+00**
30	Boiler	TB	1	1	0	2	0.000	1.10E-03	**0.00E+00**
31	Cable Fires caused by welding and cutting (Turbine Building)	TB	1	1	17	224	0.076	1.60E-03	**1.21E-04**
32	Main Feedwater Pumps	TB	1	1	0	8	0.000	1.30E-02	**0.00E+00**
33	Turbine Generator Excitor	TB	1	1	0	1	0.000	3.90E-03	**0.00E+00**
34	Turbine Generator Hydrogen	TB	1	1	0	1	0.000	6.50E-03	**0.00E+00**
35	Turbine Generator Oil	TB	1	1	0	1	0.000	9.50E-03	**0.00E+00**
36	Transient fires caused by welding and cutting (Turbine Building)	TB	1	1	1	17	0.059	8.20E-03	**4.82E-04**
37	Transients (Turbine Building)	TB	1	1	1	17	0.059	8.50E-03	**5.00E-04**
Compartment Fire Frequency (FL)			**3.08E-03**						
Notes:									
(A) Number of Ignition Sources in Compartment									
(B) Total Number of Ignition Sources in Selected Plant Location or in Plant for Plant Wide Components									
*Ignition Source Frequency: FIF = WFL*WFIS*FF*									
Compartment Fire Frequency: FL = SUM(FIF)									

Table 12A-33

F4260 - Fire Compartment Ignition Source Data Sheet (ISDS)

Compartment Description									
	Fire Area		Fire Area F4260						
	Fire Compartment		F4260	Reactor Component Cooling Water B					
Compartment Fire Ignition Frequency									
Step 1.1	Plant Location ID		TB						
	Plant Location Description		Turbine Building						
Step 1.2	Location Weighting Factor (WFL)		1.00E+00	Plant Location					
	Location Weighting Factor (WFL)		1.00E+00	Plant Wide Components					
Compartment Ignition Sources		Plant	App. to	Weighting	Sources in	Sources in	Weighting	Fire	**Ignition Source**
(FIF)		Location	This Area	Factor	Compartment	Plant Location	Factor	Frequency	**Frequency**
Bin #	Ignition Source	L	APP	WFL	(A)	(B)	WFIS=(A)/(B)	(FF)	**(FIF)**
01	Batteries	BR	1	1	0	21	0.000	7.50E-04	**0.00E+00**
02	Reactor Coolant Pump	COP	0	1	0	0	0.000	6.10E-03	**0.00E+00**
03	Transients and Hotwork	COP	0	1	0	0	0.000	2.00E-03	**0.00E+00**
04	Main Control Board	CR	0	1	0	0	0.000	2.50E-03	**0.00E+00**
05	Cable Fires caused by welding and cutting (Cntrl/Aux/Rx Building)	CAR	0	1	0	1166	0.000	1.60E-03	**0.00E+00**
06	Transient fires caused by welding and cutting (Cntrl/Aux/Rx Building)	CAR	0	1	0	53	0.000	9.70E-03	**0.00E+00**
07	Transients (Cntrl/Aux/Rx Building)	CAR	0	1	0	53	0.000	3.90E-03	**0.00E+00**
08	Diesel Generators	DGR	1	1	0	4	0.000	2.10E-02	**0.00E+00**
09	Air Compressors	XX	1	1	0	4	0.000	2.40E-03	**0.00E+00**
10	Battery Chargers	XX	1	1	0	15	0.000	1.80E-03	**0.00E+00**
11	Cable Fires caused by welding and cutting (Plant-Wide)	XX	0	1	0	430	0.000	2.00E-03	**0.00E+00**
12	Cable Run	XX	1	1	17	1820	0.009	4.40E-03	**4.11E-05**
13	Dryers	XX	1	1	0	2	0.000	2.60E-03	**0.00E+00**
14	Electric Motors	XX	1	1	0	8	0.000	4.60E-03	**0.00E+00**
15	Electrical Cabinets	XX	1	1	3	530	0.006	4.50E-02	**2.55E-04**
16	High Energy Arcing Faults	XX	1	1	0	77	0.000	1.50E-03	**0.00E+00**
17	Hydrogen Tanks	XX	1	1	0	2	0.000	1.70E-03	**0.00E+00**
18	Junction Boxes	XX	1	1	17	1820	0.009	1.90E-03	**1.77E-05**
19	Misc. Hydrogen Fires	XX	1	1	0	0	0.000	2.50E-03	**0.00E+00**
20	Off-gas/H2 Recombiner (BWR)	XX	1	1	0	2	0.000	4.40E-02	**0.00E+00**
21	Pumps	XX	1	1	3	43	0.070	2.10E-02	**1.47E-03**
22	RPS MG Sets	XX	0	1	0	0	0.000	1.60E-03	**0.00E+00**
23a	Transformers (oil filled)	XX	1	1	0	0	0.000	9.90E-03	**0.00E+00**
23b	Transformers (dry)	XX	1	1	0	67	0.000	9.90E-03	**0.00E+00**
24	Transient fires caused by welding and cutting (Plant-Wide)	XX	0	1	0	78	0.000	4.90E-03	**0.00E+00**
25	Transients (Plant-Wide)	XX	0	1	0	78	0.000	9.90E-03	**0.00E+00**
26	Ventilation Subsystems	XX	1	1	1	26	0.038	7.40E-03	**2.85E-04**
27	Transformer - Catastrophic	TY	0	1	0	9	0.000	6.00E-03	**0.00E+00**
28	Transformer - Non Catastrophic	TY	0	1	0	8	0.000	1.20E-02	**0.00E+00**
29	Yard Transformers (others)	TY	0	1	0	1	0.000	2.20E-03	**0.00E+00**
30	Boiler	TB	1	1	0	2	0.000	1.10E-03	**0.00E+00**
31	Cable Fires caused by welding and cutting (Turbine Building)	TB	1	1	17	224	0.076	1.60E-03	**1.21E-04**
32	Main Feedwater Pumps	TB	1	1	0	8	0.000	1.30E-02	**0.00E+00**
33	Turbine Generator Excitor	TB	1	1	0	1	0.000	3.90E-03	**0.00E+00**
34	Turbine Generator Hydrogen	TB	1	1	0	1	0.000	6.50E-03	**0.00E+00**
35	Turbine Generator Oil	TB	1	1	0	1	0.000	9.50E-03	**0.00E+00**
36	Transient fires caused by welding and cutting (Turbine Building)	TB	1	1	1	17	0.059	8.20E-03	**4.82E-04**
37	Transients (Turbine Building)	TB	1	1	1	17	0.059	8.50E-03	**5.00E-04**
Compartment Fire Frequency (FL)			**3.17E-03**						
Notes:									
(A) Number of Ignition Sources in Compartment									
(B) Total Number of Ignition Sources in Selected Plant Location or in Plant for Plant Wide Components									
*Ignition Source Frequency: FIF = WFL*WFIS*FF*									
Compartment Fire Frequency: FL = SUM(FIF)									

Table 12A-34

F4271 - Fire Compartment Ignition Source Data Sheet (ISDS)

Compartment Description									
	Fire Area		Fire Area F4271						
	Fire Compartment		F4271	Phase A Main Transformer					
Compartment Fire Ignition Frequency									
Step 1.1	Plant Location ID		XX						
	Plant Location Description		Plant-Wide						
Step 1.2	Location Weighting Factor (WFL)		1.00E+00	Plant Location					
	Location Weighting Factor (WFL)		1.00E+00	Plant Wide Components					
Compartment Ignition Sources		Plant	App. to	Weighting	Sources in	Sources in	Weighting	Fire	**Ignition Source**
(FIF)		Location	This Area	Factor	Compartment	Plant Location	Factor	Frequency	**Frequency**
Bin #	Ignition Source	L	APP	WFL	(A)	(B)	WFIS=(A)/(B)	(FF)	**(FIF)**
01	Batteries	BR	1	1	0	21	0.000	7.50E-04	**0.00E+00**
02	Reactor Coolant Pump	COP	0	1	0	0	0.000	6.10E-03	**0.00E+00**
03	Transients and Hotwork	COP	0	1	0	0	0.000	2.00E-03	**0.00E+00**
04	Main Control Board	CR	0	1	0	0	0.000	2.50E-03	**0.00E+00**
05	Cable Fires caused by welding and cutting (Cntrl/Aux/Rx Building)	CAR	0	1	0	1166	0.000	1.60E-03	**0.00E+00**
06	Transient fires caused by welding and cutting (Cntrl/Aux/Rx Building)	CAR	0	1	0	53	0.000	9.70E-03	**0.00E+00**
07	Transients (Cntrl/Aux/Rx Building)	CAR	0	1	0	53	0.000	3.90E-03	**0.00E+00**
08	Diesel Generators	DGR	1	1	0	4	0.000	2.10E-02	**0.00E+00**
09	Air Compressors	XX	1	1	0	4	0.000	2.40E-03	**0.00E+00**
10	Battery Chargers	XX	1	1	0	15	0.000	1.80E-03	**0.00E+00**
11	Cable Fires caused by welding and cutting (Plant-Wide)	XX	1	1	0	430	0.000	2.00E-03	**0.00E+00**
12	Cable Run	XX	1	1	0	1820	0.000	4.40E-03	**0.00E+00**
13	Dryers	XX	1	1	0	2	0.000	2.60E-03	**0.00E+00**
14	Electric Motors	XX	1	1	0	8	0.000	4.60E-03	**0.00E+00**
15	Electrical Cabinets	XX	1	1	0	530	0.000	4.50E-02	**0.00E+00**
16	High Energy Arcing Faults	XX	1	1	0	77	0.000	1.50E-03	**0.00E+00**
17	Hydrogen Tanks	XX	1	1	0	2	0.000	1.70E-03	**0.00E+00**
18	Junction Boxes	XX	1	1	0	1820	0.000	1.90E-03	**0.00E+00**
19	Misc. Hydrogen Fires	XX	1	1	0	0	0.000	2.50E-03	**0.00E+00**
20	Off-gas/H2 Recombiner (BWR)	XX	1	1	0	2	0.000	4.40E-02	**0.00E+00**
21	Pumps	XX	1	1	0	43	0.000	2.10E-02	**0.00E+00**
22	RPS MG Sets	XX	0	1	0	0	0.000	1.60E-03	**0.00E+00**
23a	Transformers (oil filled)	XX	1	1	0	0	0.000	9.90E-03	**0.00E+00**
23b	Transformers (dry)	XX	1	1	0	67	0.000	9.90E-03	**0.00E+00**
24	Transient fires caused by welding and cutting (Plant-Wide)	XX	1	1	1	78	0.013	4.90E-03	**6.28E-05**
25	Transients (Plant-Wide)	XX	1	1	1	78	0.013	9.90E-03	**1.27E-04**
26	Ventilation Subsystems	XX	1	1	0	26	0.000	7.40E-03	**0.00E+00**
27	Transformer - Catastrophic	TY	0	1	1	9	0.111	6.00E-03	**6.67E-04**
28	Transformer - Non Catastrophic	TY	0	1	1	8	0.125	1.20E-02	**1.50E-03**
29	Yard Transformers (others)	TY	0	1	0	1	0.000	2.20E-03	**0.00E+00**
30	Boiler	TB	0	1	0	2	0.000	1.10E-03	**0.00E+00**
31	Cable Fires caused by welding and cutting (Turbine Building)	TB	0	1	0	224	0.000	1.60E-03	**0.00E+00**
32	Main Feedwater Pumps	TB	1	1	0	8	0.000	1.30E-02	**0.00E+00**
33	Turbine Generator Excitor	TB	0	1	0	1	0.000	3.90E-03	**0.00E+00**
34	Turbine Generator Hydrogen	TB	0	1	0	1	0.000	6.50E-03	**0.00E+00**
35	Turbine Generator Oil	TB	0	1	0	1	0.000	9.50E-03	**0.00E+00**
36	Transient fires caused by welding and cutting (Turbine Building)	TB	0	1	0	17	0.000	8.20E-03	**0.00E+00**
37	Transients (Turbine Building)	TB	0	1	0	17	0.000	8.50E-03	**0.00E+00**
Compartment Fire Frequency (FL)			**2.36E-03**						
Notes:									
(A) Number of Ignition Sources in Compartment									
(B) Total Number of Ignition Sources in Selected Plant Location or in Plant for Plant Wide Components									
*Ignition Source Frequency: FIF = WFL*WFIS*FF*									
Compartment Fire Frequency: FL = SUM(FIF)									

Table 12A-35

F4272 - Fire Compartment Ignition Source Data Sheet (ISDS)

Compartment Description									
	Fire Area		Fire Area F4272						
	Fire Compartment		F4272	Phase B Main Transformer					
Compartment Fire Ignition Frequency									
Step 1.1	Plant Location ID		XX						
	Plant Location Description		Plant-Wide						
Step 1.2	Location Weighting Factor (WFL)		1.00E+00	Plant Location					
	Location Weighting Factor (WFL)		1.00E+00	Plant Wide Components					
Compartment Ignition Sources		Plant	App. to	Weighting	Sources in	Sources in	Weighting	Fire	**Ignition Source**
(FIF)		Location	This Area	Factor	Compartment	Plant Location	Factor	Frequency	**Frequency**
Bin #	Ignition Source	L	APP	WFL	(A)	(B)	WFIS=(A)/(B)	(FF)	**(FIF)**
01	Batteries	BR	1	1	0	21	0.000	7.50E-04	**0.00E+00**
02	Reactor Coolant Pump	COP	0	1	0	0	0.000	6.10E-03	**0.00E+00**
03	Transients and Hotwork	COP	0	1	0	0	0.000	2.00E-03	**0.00E+00**
04	Main Control Board	CR	0	1	0	0	0.000	2.50E-03	**0.00E+00**
05	Cable Fires caused by welding and cutting (Cntrl/Aux/Rx Building)	CAR	0	1	0	1166	0.000	1.60E-03	**0.00E+00**
06	Transient fires caused by welding and cutting (Cntrl/Aux/Rx Building)	CAR	0	1	0	53	0.000	9.70E-03	**0.00E+00**
07	Transients (Cntrl/Aux/Rx Building)	CAR	0	1	0	53	0.000	3.90E-03	**0.00E+00**
08	Diesel Generators	DGR	1	1	0	4	0.000	2.10E-02	**0.00E+00**
09	Air Compressors	XX	1	1	0	4	0.000	2.40E-03	**0.00E+00**
10	Battery Chargers	XX	1	1	0	15	0.000	1.80E-03	**0.00E+00**
11	Cable Fires caused by welding and cutting (Plant-Wide)	XX	1	1	0	430	0.000	2.00E-03	**0.00E+00**
12	Cable Run	XX	1	1	0	1820	0.000	4.40E-03	**0.00E+00**
13	Dryers	XX	1	1	0	2	0.000	2.60E-03	**0.00E+00**
14	Electric Motors	XX	1	1	0	8	0.000	4.60E-03	**0.00E+00**
15	Electrical Cabinets	XX	1	1	0	530	0.000	4.50E-02	**0.00E+00**
16	High Energy Arcing Faults	XX	1	1	0	77	0.000	1.50E-03	**0.00E+00**
17	Hydrogen Tanks	XX	1	1	0	2	0.000	1.70E-03	**0.00E+00**
18	Junction Boxes	XX	1	1	0	1820	0.000	1.90E-03	**0.00E+00**
19	Misc. Hydrogen Fires	XX	1	1	0	0	0.000	2.50E-03	**0.00E+00**
20	Off-gas/H2 Recombiner (BWR)	XX	1	1	0	2	0.000	4.40E-02	**0.00E+00**
21	Pumps	XX	1	1	0	43	0.000	2.10E-02	**0.00E+00**
22	RPS MG Sets	XX	0	1	0	0	0.000	1.60E-03	**0.00E+00**
23a	Transformers (oil filled)	XX	1	1	0	0	0.000	9.90E-03	**0.00E+00**
23b	Transformers (dry)	XX	1	1	0	67	0.000	9.90E-03	**0.00E+00**
24	Transient fires caused by welding and cutting (Plant-Wide)	XX	1	1	1	78	0.013	4.90E-03	**6.28E-05**
25	Transients (Plant-Wide)	XX	1	1	1	78	0.013	9.90E-03	**1.27E-04**
26	Ventilation Subsystems	XX	1	1	0	26	0.000	7.40E-03	**0.00E+00**
27	Transformer - Catastrophic	TY	0	1	1	9	0.111	6.00E-03	**6.67E-04**
28	Transformer - Non Catastrophic	TY	0	1	1	8	0.125	1.20E-02	**1.50E-03**
29	Yard Transformers (others)	TY	0	1	0	1	0.000	2.20E-03	**0.00E+00**
30	Boiler	TB	0	1	0	2	0.000	1.10E-03	**0.00E+00**
31	Cable Fires caused by welding and cutting (Turbine Building)	TB	0	1	0	224	0.000	1.60E-03	**0.00E+00**
32	Main Feedwater Pumps	TB	1	1	0	8	0.000	1.30E-02	**0.00E+00**
33	Turbine Generator Excitor	TB	0	1	0	1	0.000	3.90E-03	**0.00E+00**
34	Turbine Generator Hydrogen	TB	0	1	0	1	0.000	6.50E-03	**0.00E+00**
35	Turbine Generator Oil	TB	0	1	0	1	0.000	9.50E-03	**0.00E+00**
36	Transient fires caused by welding and cutting (Turbine Building)	TB	0	1	0	17	0.000	8.20E-03	**0.00E+00**
37	Transients (Turbine Building)	TB	0	1	0	17	0.000	8.50E-03	**0.00E+00**
Compartment Fire Frequency (FL)			**2.36E-03**						
Notes:									
(A) Number of Ignition Sources in Compartment									
(B) Total Number of Ignition Sources in Selected Plant Location or in Plant for Plant Wide Components									
*Ignition Source Frequency: FIF = WFL*WFIS*FF*									
Compartment Fire Frequency: FL = SUM(FIF)									

Table 12A-36

F4273 - Fire Compartment Ignition Source Data Sheet (ISDS)

Compartment Description									
	Fire Area		Fire Area F4273						
	Fire Compartment		F4273	Phase C Main Transformer					
Compartment Fire Ignition Frequency									
Step 1.1	Plant Location ID		XX						
	Plant Location Description		Plant-Wide						
Step 1.2	Location Weighting Factor (WFL)		1.00E+00	Plant Location					
	Location Weighting Factor (WFL)		1.00E+00	Plant Wide Components					
Compartment Ignition Sources		Plant	App. to	Weighting	Sources in	Sources in	Weighting	Fire	**Ignition Source**
(FIF)		Location	This Area	Factor	Compartment	Plant Location	Factor	Frequency	**Frequency**
Bin #	Ignition Source	L	APP	WFL	(A)	(B)	WFIS=(A)/(B)	(FF)	**(FIF)**
01	Batteries	BR	1	1	0	21	0.000	7.50E-04	**0.00E+00**
02	Reactor Coolant Pump	COP	0	1	0	0	0.000	6.10E-03	**0.00E+00**
03	Transients and Hotwork	COP	0	1	0	0	0.000	2.00E-03	**0.00E+00**
04	Main Control Board	CR	0	1	0	0	0.000	2.50E-03	**0.00E+00**
05	Cable Fires caused by welding and cutting (Cntrl/Aux/Rx Building)	CAR	0	1	0	1166	0.000	1.60E-03	**0.00E+00**
06	Transient fires caused by welding and cutting (Cntrl/Aux/Rx Building)	CAR	0	1	0	53	0.000	9.70E-03	**0.00E+00**
07	Transients (Cntrl/Aux/Rx Building)	CAR	0	1	0	53	0.000	3.90E-03	**0.00E+00**
08	Diesel Generators	DGR	1	1	0	4	0.000	2.10E-02	**0.00E+00**
09	Air Compressors	XX	1	1	0	4	0.000	2.40E-03	**0.00E+00**
10	Battery Chargers	XX	1	1	0	15	0.000	1.80E-03	**0.00E+00**
11	Cable Fires caused by welding and cutting (Plant-Wide)	XX	1	1	0	430	0.000	2.00E-03	**0.00E+00**
12	Cable Run	XX	1	1	0	1820	0.000	4.40E-03	**0.00E+00**
13	Dryers	XX	1	1	0	2	0.000	2.60E-03	**0.00E+00**
14	Electric Motors	XX	1	1	0	8	0.000	4.60E-03	**0.00E+00**
15	Electrical Cabinets	XX	1	1	0	530	0.000	4.50E-02	**0.00E+00**
16	High Energy Arcing Faults	XX	1	1	0	77	0.000	1.50E-03	**0.00E+00**
17	Hydrogen Tanks	XX	1	1	0	2	0.000	1.70E-03	**0.00E+00**
18	Junction Boxes	XX	1	1	0	1820	0.000	1.90E-03	**0.00E+00**
19	Misc. Hydrogen Fires	XX	1	1	0	0	0.000	2.50E-03	**0.00E+00**
20	Off-gas/H2 Recombiner (BWR)	XX	1	1	0	2	0.000	4.40E-02	**0.00E+00**
21	Pumps	XX	1	1	0	43	0.000	2.10E-02	**0.00E+00**
22	RPS MG Sets	XX	0	1	0	0	0.000	1.60E-03	**0.00E+00**
23a	Transformers (oil filled)	XX	1	1	0	0	0.000	9.90E-03	**0.00E+00**
23b	Transformers (dry)	XX	1	1	0	67	0.000	9.90E-03	**0.00E+00**
24	Transient fires caused by welding and cutting (Plant-Wide)	XX	1	1	1	78	0.013	4.90E-03	**6.28E-05**
25	Transients (Plant-Wide)	XX	1	1	1	78	0.013	9.90E-03	**1.27E-04**
26	Ventilation Subsystems	XX	1	1	0	26	0.000	7.40E-03	**0.00E+00**
27	Transformer - Catastrophic	TY	0	1	1	9	0.111	6.00E-03	**6.67E-04**
28	Transformer - Non Catastrophic	TY	0	1	1	8	0.125	1.20E-02	**1.50E-03**
29	Yard Transformers (others)	TY	0	1	0	1	0.000	2.20E-03	**0.00E+00**
30	Boiler	TB	0	1	0	2	0.000	1.10E-03	**0.00E+00**
31	Cable Fires caused by welding and cutting (Turbine Building)	TB	0	1	0	224	0.000	1.60E-03	**0.00E+00**
32	Main Feedwater Pumps	TB	1	1	0	8	0.000	1.30E-02	**0.00E+00**
33	Turbine Generator Excitor	TB	0	1	0	1	0.000	3.90E-03	**0.00E+00**
34	Turbine Generator Hydrogen	TB	0	1	0	1	0.000	6.50E-03	**0.00E+00**
35	Turbine Generator Oil	TB	0	1	0	1	0.000	9.50E-03	**0.00E+00**
36	Transient fires caused by welding and cutting (Turbine Building)	TB	0	1	0	17	0.000	8.20E-03	**0.00E+00**
37	Transients (Turbine Building)	TB	0	1	0	17	0.000	8.50E-03	**0.00E+00**
Compartment Fire Frequency (FL)			**2.36E-03**						
Notes:									
(A) Number of Ignition Sources in Compartment									
(B) Total Number of Ignition Sources in Selected Plant Location or in Plant for Plant Wide Components									
*Ignition Source Frequency: FIF = WFL*WFIS*FF*									
Compartment Fire Frequency: FL = SUM(FIF)									

Table 12A-37

F4302 - Fire Compartment Ignition Source Data Sheet (ISDS)

Compartment Description									
	Fire Area		Fire Area F4302						
	Fire Compartment		F4302	Instrument Air / Service Air Train A					
Compartment Fire Ignition Frequency									
Step 1.1	Plant Location ID		TB						
	Plant Location Description		Turbine Building						
Step 1.2	Location Weighting Factor (WFL)		1.00E+00	Plant Location					
	Location Weighting Factor (WFL)		1.00E+00	Plant Wide Components					
Compartment Ignition Sources		Plant	App. to	Weighting	Sources in	Sources in	Weighting	Fire	**Ignition Source**
(FIF)		Location	This Area	Factor	Compartment	Plant Location	Factor	Frequency	**Frequency**
Bin #	Ignition Source	L	APP	WFL	(A)	(B)	WFIS=(A)/(B)	(FF)	**(FIF)**
01	Batteries	BR	1	1	0	21	0.000	7.50E-04	**0.00E+00**
02	Reactor Coolant Pump	COP	0	1	0	0	0.000	6.10E-03	**0.00E+00**
03	Transients and Hotwork	COP	0	1	0	0	0.000	2.00E-03	**0.00E+00**
04	Main Control Board	CR	0	1	0	0	0.000	2.50E-03	**0.00E+00**
05	Cable Fires caused by welding and cutting (Cntrl/Aux/Rx Building)	CAR	0	1	0	1166	0.000	1.60E-03	**0.00E+00**
06	Transient fires caused by welding and cutting (Cntrl/Aux/Rx Building)	CAR	0	1	0	53	0.000	9.70E-03	**0.00E+00**
07	Transients (Cntrl/Aux/Rx Building)	CAR	0	1	0	53	0.000	3.90E-03	**0.00E+00**
08	Diesel Generators	DGR	1	1	0	4	0.000	2.10E-02	**0.00E+00**
09	Air Compressors	XX	1	1	2	4	0.500	2.40E-03	**1.20E-03**
10	Battery Chargers	XX	1	1	0	15	0.000	1.80E-03	**0.00E+00**
11	Cable Fires caused by welding and cutting (Plant-Wide)	XX	0	1	0	430	0.000	2.00E-03	**0.00E+00**
12	Cable Run	XX	1	1	7	1820	0.004	4.40E-03	**1.69E-05**
13	Dryers	XX	1	1	0	2	0.000	2.60E-03	**0.00E+00**
14	Electric Motors	XX	1	1	0	8	0.000	4.60E-03	**0.00E+00**
15	Electrical Cabinets	XX	1	1	0	530	0.000	4.50E-02	**0.00E+00**
16	High Energy Arcing Faults	XX	1	1	0	77	0.000	1.50E-03	**0.00E+00**
17	Hydrogen Tanks	XX	1	1	0	2	0.000	1.70E-03	**0.00E+00**
18	Junction Boxes	XX	1	1	7	1820	0.004	1.90E-03	**7.31E-06**
19	Misc. Hydrogen Fires	XX	1	1	0	0	0.000	2.50E-03	**0.00E+00**
20	Off-gas/H2 Recombiner (BWR)	XX	1	1	0	2	0.000	4.40E-02	**0.00E+00**
21	Pumps	XX	1	1	0	43	0.000	2.10E-02	**0.00E+00**
22	RPS MG Sets	XX	0	1	0	0	0.000	1.60E-03	**0.00E+00**
23a	Transformers (oil filled)	XX	1	1	0	0	0.000	9.90E-03	**0.00E+00**
23b	Transformers (dry)	XX	1	1	0	67	0.000	9.90E-03	**0.00E+00**
24	Transient fires caused by welding and cutting (Plant-Wide)	XX	0	1	0	78	0.000	4.90E-03	**0.00E+00**
25	Transients (Plant-Wide)	XX	0	1	0	78	0.000	9.90E-03	**0.00E+00**
26	Ventilation Subsystems	XX	1	1	0	26	0.000	7.40E-03	**0.00E+00**
27	Transformer - Catastrophic	TY	0	1	0	9	0.000	6.00E-03	**0.00E+00**
28	Transformer - Non Catastrophic	TY	0	1	0	8	0.000	1.20E-02	**0.00E+00**
29	Yard Transformers (others)	TY	0	1	0	1	0.000	2.20E-03	**0.00E+00**
30	Boiler	TB	1	1	0	2	0.000	1.10E-03	**0.00E+00**
31	Cable Fires caused by welding and cutting (Turbine Building)	TB	1	1	7	224	0.031	1.60E-03	**5.00E-05**
32	Main Feedwater Pumps	TB	1	1	0	8	0.000	1.30E-02	**0.00E+00**
33	Turbine Generator Excitor	TB	1	1	0	1	0.000	3.90E-03	**0.00E+00**
34	Turbine Generator Hydrogen	TB	1	1	0	1	0.000	6.50E-03	**0.00E+00**
35	Turbine Generator Oil	TB	1	1	0	1	0.000	9.50E-03	**0.00E+00**
36	Transient fires caused by welding and cutting (Turbine Building)	TB	1	1	1	17	0.059	8.20E-03	**4.82E-04**
37	Transients (Turbine Building)	TB	1	1	1	17	0.059	8.50E-03	**5.00E-04**
Compartment Fire Frequency (FL)			**2.26E-03**						
Notes:									
(A) Number of Ignition Sources in Compartment									
(B) Total Number of Ignition Sources in Selected Plant Location or in Plant for Plant Wide Components									
*Ignition Source Frequency: FIF = WFL*WFIS*FF*									
Compartment Fire Frequency: FL = SUM(FIF)									

Table 12A-38

F4303 - Fire Compartment Ignition Source Data Sheet (ISDS)

Compartment Description									
	Fire Area		Fire Area F4303						
	Fire Compartment		F4303	Instrument Air / Service Air Train B					
Compartment Fire Ignition Frequency									
Step 1.1	Plant Location ID		TB						
	Plant Location Description		Turbine Building						
Step 1.2	Location Weighting Factor (WFL)		1.00E+00	Plant Location					
	Location Weighting Factor (WFL)		1.00E+00	Plant Wide Components					
Compartment Ignition Sources (FIF)		Plant Location	App. to This Area	Weighting Factor	Sources in Compartment	Sources in Plant Location	Weighting Factor	Fire Frequency	**Ignition Source Frequency**
Bin #	Ignition Source	L	APP	WFL	(A)	(B)	WFIS=(A)/(B)	(FF)	**(FIF)**
01	Batteries	BR	1	1	0	21	0.000	7.50E-04	**0.00E+00**
02	Reactor Coolant Pump	COP	0	1	0	0	0.000	6.10E-03	**0.00E+00**
03	Transients and Hotwork	COP	0	1	0	0	0.000	2.00E-03	**0.00E+00**
04	Main Control Board	CR	0	1	0	0	0.000	2.50E-03	**0.00E+00**
05	Cable Fires caused by welding and cutting (Cntrl/Aux/Rx Building)	CAR	0	1	0	1166	0.000	1.60E-03	**0.00E+00**
06	Transient fires caused by welding and cutting (Cntrl/Aux/Rx Building)	CAR	0	1	0	53	0.000	9.70E-03	**0.00E+00**
07	Transients (Cntrl/Aux/Rx Building)	CAR	0	1	0	53	0.000	3.90E-03	**0.00E+00**
08	Diesel Generators	DGR	1	1	0	4	0.000	2.10E-02	**0.00E+00**
09	Air Compressors	XX	1	1	2	4	0.500	2.40E-03	**1.20E-03**
10	Battery Chargers	XX	1	1	0	15	0.000	1.80E-03	**0.00E+00**
11	Cable Fires caused by welding and cutting (Plant-Wide)	XX	0	1	0	430	0.000	2.00E-03	**0.00E+00**
12	Cable Run	XX	1	1	7	1820	0.004	4.40E-03	**1.69E-05**
13	Dryers	XX	1	1	0	2	0.000	2.60E-03	**0.00E+00**
14	Electric Motors	XX	1	1	0	8	0.000	4.60E-03	**0.00E+00**
15	Electrical Cabinets	XX	1	1	0	530	0.000	4.50E-02	**0.00E+00**
16	High Energy Arcing Faults	XX	1	1	0	77	0.000	1.50E-03	**0.00E+00**
17	Hydrogen Tanks	XX	1	1	0	2	0.000	1.70E-03	**0.00E+00**
18	Junction Boxes	XX	1	1	7	1820	0.004	1.90E-03	**7.31E-06**
19	Misc. Hydrogen Fires	XX	1	1	0	0	0.000	2.50E-03	**0.00E+00**
20	Off-gas/H2 Recombiner (BWR)	XX	1	1	0	2	0.000	4.40E-02	**0.00E+00**
21	Pumps	XX	1	1	0	43	0.000	2.10E-02	**0.00E+00**
22	RPS MG Sets	XX	0	1	0	0	0.000	1.60E-03	**0.00E+00**
23a	Transformers (oil filled)	XX	1	1	0	0	0.000	9.90E-03	**0.00E+00**
23b	Transformers (dry)	XX	1	1	0	67	0.000	9.90E-03	**0.00E+00**
24	Transient fires caused by welding and cutting (Plant-Wide)	XX	0	1	0	78	0.000	4.90E-03	**0.00E+00**
25	Transients (Plant-Wide)	XX	0	1	0	78	0.000	9.90E-03	**0.00E+00**
26	Ventilation Subsystems	XX	1	1	0	26	0.000	7.40E-03	**0.00E+00**
27	Transformer - Catastrophic	TY	0	1	0	9	0.000	6.00E-03	**0.00E+00**
28	Transformer - Non Catastrophic	TY	0	1	0	8	0.000	1.20E-02	**0.00E+00**
29	Yard Transformers (others)	TY	0	1	0	1	0.000	2.20E-03	**0.00E+00**
30	Boiler	TB	1	1	0	2	0.000	1.10E-03	**0.00E+00**
31	Cable Fires caused by welding and cutting (Turbine Building)	TB	1	1	7	224	0.031	1.60E-03	**5.00E-05**
32	Main Feedwater Pumps	TB	1	1	0	8	0.000	1.30E-02	**0.00E+00**
33	Turbine Generator Excitor	TB	1	1	0	1	0.000	3.90E-03	**0.00E+00**
34	Turbine Generator Hydrogen	TB	1	1	0	1	0.000	6.50E-03	**0.00E+00**
35	Turbine Generator Oil	TB	1	1	0	1	0.000	9.50E-03	**0.00E+00**
36	Transient fires caused by welding and cutting (Turbine Building)	TB	1	1	1	17	0.059	8.20E-03	**4.82E-04**
37	Transients (Turbine Building)	TB	1	1	1	17	0.059	8.50E-03	**5.00E-04**
Compartment Fire Frequency (FL)			**2.26E-03**						
Notes:									
(A) Number of Ignition Sources in Compartment									
(B) Total Number of Ignition Sources in Selected Plant Location or in Plant for Plant Wide Components									
*Ignition Source Frequency: FIF = WFL*WFIS*FF*									
Compartment Fire Frequency: FL = SUM(FIF)									

Table 12A-39

F4403 - Fire Compartment Ignition Source Data Sheet (ISDS)

Compartment Description									
	Fire Area		Fire Area F4403						
	Fire Compartment		F4403	Turbine Lube Oil					
Compartment Fire Ignition Frequency									
Step 1.1	Plant Location ID		TB						
	Plant Location Description		Turbine Building						
Step 1.2	Location Weighting Factor (WFL)		1.00E+00	Plant Location					
	Location Weighting Factor (WFL)		1.00E+00	Plant Wide Components					
Compartment Ignition Sources		Plant	App. to	Weighting	Sources in	Sources in	Weighting	Fire	**Ignition Source**
(FIF)		Location	This Area	Factor	Compartment	Plant Location	Factor	Frequency	**Frequency**
Bin #	Ignition Source	L	APP	WFL	(A)	(B)	WFIS=(A)/(B)	(FF)	**(FIF)**
01	Batteries	BR	1	1	0	21	0.000	7.50E-04	**0.00E+00**
02	Reactor Coolant Pump	COP	0	1	0	0	0.000	6.10E-03	**0.00E+00**
03	Transients and Hotwork	COP	0	1	0	0	0.000	2.00E-03	**0.00E+00**
04	Main Control Board	CR	0	1	0	0	0.000	2.50E-03	**0.00E+00**
05	Cable Fires caused by welding and cutting (Cntrl/Aux/Rx Building)	CAR	0	1	0	1166	0.000	1.60E-03	**0.00E+00**
06	Transient fires caused by welding and cutting (Cntrl/Aux/Rx Building)	CAR	0	1	0	53	0.000	9.70E-03	**0.00E+00**
07	Transients (Cntrl/Aux/Rx Building)	CAR	0	1	0	53	0.000	3.90E-03	**0.00E+00**
08	Diesel Generators	DGR	1	1	0	4	0.000	2.10E-02	**0.00E+00**
09	Air Compressors	XX	1	1	0	4	0.000	2.40E-03	**0.00E+00**
10	Battery Chargers	XX	1	1	0	15	0.000	1.80E-03	**0.00E+00**
11	Cable Fires caused by welding and cutting (Plant-Wide)	XX	0	1	0	430	0.000	2.00E-03	**0.00E+00**
12	Cable Run	XX	1	1	0	1820	0.000	4.40E-03	**0.00E+00**
13	Dryers	XX	1	1	0	2	0.000	2.60E-03	**0.00E+00**
14	Electric Motors	XX	1	1	0	8	0.000	4.60E-03	**0.00E+00**
15	Electrical Cabinets	XX	1	1	1	530	0.002	4.50E-02	**8.49E-05**
16	High Energy Arcing Faults	XX	1	1	0	77	0.000	1.50E-03	**0.00E+00**
17	Hydrogen Tanks	XX	1	1	0	2	0.000	1.70E-03	**0.00E+00**
18	Junction Boxes	XX	1	1	0	1820	0.000	1.90E-03	**0.00E+00**
19	Misc. Hydrogen Fires	XX	1	1	0	0	0.000	2.50E-03	**0.00E+00**
20	Off-gas/H2 Recombiner (BWR)	XX	1	1	0	2	0.000	4.40E-02	**0.00E+00**
21	Pumps	XX	1	1	0	43	0.000	2.10E-02	**0.00E+00**
22	RPS MG Sets	XX	0	1	0	0	0.000	1.60E-03	**0.00E+00**
23a	Transformers (oil filled)	XX	1	1	0	0	0.000	9.90E-03	**0.00E+00**
23b	Transformers (dry)	XX	1	1	0	67	0.000	9.90E-03	**0.00E+00**
24	Transient fires caused by welding and cutting (Plant-Wide)	XX	0	1	0	78	0.000	4.90E-03	**0.00E+00**
25	Transients (Plant-Wide)	XX	0	1	0	78	0.000	9.90E-03	**0.00E+00**
26	Ventilation Subsystems	XX	1	1	0	26	0.000	7.40E-03	**0.00E+00**
27	Transformer - Catastrophic	TY	0	1	0	9	0.000	6.00E-03	**0.00E+00**
28	Transformer - Non Catastrophic	TY	0	1	0	8	0.000	1.20E-02	**0.00E+00**
29	Yard Transformers (others)	TY	0	1	0	1	0.000	2.20E-03	**0.00E+00**
30	Boiler	TB	1	1	0	2	0.000	1.10E-03	**0.00E+00**
31	Cable Fires caused by welding and cutting (Turbine Building)	TB	1	1	0	224	0.000	1.60E-03	**0.00E+00**
32	Main Feedwater Pumps	TB	1	1	0	8	0.000	1.30E-02	**0.00E+00**
33	Turbine Generator Excitor	TB	1	1	0	1	0.000	3.90E-03	**0.00E+00**
34	Turbine Generator Hydrogen	TB	1	1	0	1	0.000	6.50E-03	**0.00E+00**
35	Turbine Generator Oil	TB	1	1	1	1	1.000	9.50E-03	**9.50E-03**
36	Transient fires caused by welding and cutting (Turbine Building)	TB	1	1	1	17	0.059	8.20E-03	**4.82E-04**
37	Transients (Turbine Building)	TB	1	1	1	17	0.059	8.50E-03	**5.00E-04**
Compartment Fire Frequency (FL)			**1.06E-02**						
Notes:									
(A) Number of Ignition Sources in Compartment									
(B) Total Number of Ignition Sources in Selected Plant Location or in Plant for Plant Wide Components									
*Ignition Source Frequency: FIF = WFL*WFIS*FF*									
Compartment Fire Frequency: FL = SUM(FIF)									

Table 12A-40

F4550 - Fire Compartment Ignition Source Data Sheet (ISDS)

Compartment Description									
	Fire Area		Fire Area F4550						
	Fire Compartment		F4550	Chilled Water A					
Compartment Fire Ignition Frequency									
Step 1.1	Plant Location ID		TB						
	Plant Location Description		Turbine Building						
Step 1.2	Location Weighting Factor (WFL)		1.00E+00	Plant Location					
	Location Weighting Factor (WFL)		1.00E+00	Plant Wide Components					
Compartment Ignition Sources		Plant	App. to	Weighting	Sources in	Sources in	Weighting	Fire	**Ignition Source**
(FIF)		Location	This Area	Factor	Compartment	Plant Location	Factor	Frequency	**Frequency**
Bin #	Ignition Source	L	APP	WFL	(A)	(B)	WFIS=(A)/(B)	(FF)	**(FIF)**
01	Batteries	BR	1	1	0	21	0.000	7.50E-04	**0.00E+00**
02	Reactor Coolant Pump	COP	0	1	0	0	0.000	6.10E-03	**0.00E+00**
03	Transients and Hotwork	COP	0	1	0	0	0.000	2.00E-03	**0.00E+00**
04	Main Control Board	CR	0	1	0	0	0.000	2.50E-03	**0.00E+00**
05	Cable Fires caused by welding and cutting (Cntrl/Aux/Rx Building)	CAR	0	1	0	1166	0.000	1.60E-03	**0.00E+00**
06	Transient fires caused by welding and cutting (Cntrl/Aux/Rx Building)	CAR	0	1	0	53	0.000	9.70E-03	**0.00E+00**
07	Transients (Cntrl/Aux/Rx Building)	CAR	0	1	0	53	0.000	3.90E-03	**0.00E+00**
08	Diesel Generators	DGR	1	1	0	4	0.000	2.10E-02	**0.00E+00**
09	Air Compressors	XX	1	1	0	4	0.000	2.40E-03	**0.00E+00**
10	Battery Chargers	XX	1	1	0	15	0.000	1.80E-03	**0.00E+00**
11	Cable Fires caused by welding and cutting (Plant-Wide)	XX	0	1	0	430	0.000	2.00E-03	**0.00E+00**
12	Cable Run	XX	1	1	0	1820	0.000	4.40E-03	**0.00E+00**
13	Dryers	XX	1	1	0	2	0.000	2.60E-03	**0.00E+00**
14	Electric Motors	XX	1	1	0	8	0.000	4.60E-03	**0.00E+00**
15	Electrical Cabinets	XX	1	1	1	530	0.002	4.50E-02	**8.49E-05**
16	High Energy Arcing Faults	XX	1	1	0	77	0.000	1.50E-03	**0.00E+00**
17	Hydrogen Tanks	XX	1	1	0	2	0.000	1.70E-03	**0.00E+00**
18	Junction Boxes	XX	1	1	0	1820	0.000	1.90E-03	**0.00E+00**
19	Misc. Hydrogen Fires	XX	1	1	0	0	0.000	2.50E-03	**0.00E+00**
20	Off-gas/H2 Recombiner (BWR)	XX	1	1	0	2	0.000	4.40E-02	**0.00E+00**
21	Pumps	XX	1	1	0	43	0.000	2.10E-02	**0.00E+00**
22	RPS MG Sets	XX	0	1	0	0	0.000	1.60E-03	**0.00E+00**
23a	Transformers (oil filled)	XX	1	1	0	0	0.000	9.90E-03	**0.00E+00**
23b	Transformers (dry)	XX	1	1	0	67	0.000	9.90E-03	**0.00E+00**
24	Transient fires caused by welding and cutting (Plant-Wide)	XX	0	1	0	78	0.000	4.90E-03	**0.00E+00**
25	Transients (Plant-Wide)	XX	0	1	0	78	0.000	9.90E-03	**0.00E+00**
26	Ventilation Subsystems	XX	1	1	0	26	0.000	7.40E-03	**0.00E+00**
27	Transformer - Catastrophic	TY	0	1	0	9	0.000	6.00E-03	**0.00E+00**
28	Transformer - Non Catastrophic	TY	0	1	0	8	0.000	1.20E-02	**0.00E+00**
29	Yard Transformers (others)	TY	0	1	0	1	0.000	2.20E-03	**0.00E+00**
30	Boiler	TB	1	1	0	2	0.000	1.10E-03	**0.00E+00**
31	Cable Fires caused by welding and cutting (Turbine Building)	TB	1	1	0	224	0.000	1.60E-03	**0.00E+00**
32	Main Feedwater Pumps	TB	1	1	0	8	0.000	1.30E-02	**0.00E+00**
33	Turbine Generator Excitor	TB	1	1	0	1	0.000	3.90E-03	**0.00E+00**
34	Turbine Generator Hydrogen	TB	1	1	0	1	0.000	6.50E-03	**0.00E+00**
35	Turbine Generator Oil	TB	1	1	0	1	0.000	9.50E-03	**0.00E+00**
36	Transient fires caused by welding and cutting (Turbine Building)	TB	1	1	1	17	0.059	8.20E-03	**4.82E-04**
37	Transients (Turbine Building)	TB	1	1	1	17	0.059	8.50E-03	**5.00E-04**
Compartment Fire Frequency (FL)			**1.07E-03**						
Notes:									
(A) Number of Ignition Sources in Compartment									
(B) Total Number of Ignition Sources in Selected Plant Location or in Plant for Plant Wide Components									
*Ignition Source Frequency: FIF = WFL*WFIS*FF*									
Compartment Fire Frequency: FL = SUM(FIF)									

Table 12A-41

F4560 - Fire Compartment Ignition Source Data Sheet (ISDS)

Compartment Description									
	Fire Area		Fire Area F4560						
	Fire Compartment		F4560	Chilled Water B					
Compartment Fire Ignition Frequency									
Step 1.1	Plant Location ID		TB						
	Plant Location Description		Turbine Building						
Step 1.2	Location Weighting Factor (WFL)		1.00E+00	Plant Location					
	Location Weighting Factor (WFL)		1.00E+00	Plant Wide Components					
Compartment Ignition Sources		Plant	App. to	Weighting	Sources in	Sources in	Weighting	Fire	**Ignition Source**
(FIF)		Location	This Area	Factor	Compartment	Plant Location	Factor	Frequency	**Frequency**
Bin #	Ignition Source	L	APP	WFL	(A)	(B)	WFIS=(A)/(B)	(FF)	**(FIF)**
01	Batteries	BR	1	1	0	21	0.000	7.50E-04	**0.00E+00**
02	Reactor Coolant Pump	COP	0	1	0	0	0.000	6.10E-03	**0.00E+00**
03	Transients and Hotwork	COP	0	1	0	0	0.000	2.00E-03	**0.00E+00**
04	Main Control Board	CR	0	1	0	0	0.000	2.50E-03	**0.00E+00**
05	Cable Fires caused by welding and cutting (Cntrl/Aux/Rx Building)	CAR	0	1	0	1166	0.000	1.60E-03	**0.00E+00**
06	Transient fires caused by welding and cutting (Cntrl/Aux/Rx Building)	CAR	0	1	0	53	0.000	9.70E-03	**0.00E+00**
07	Transients (Cntrl/Aux/Rx Building)	CAR	0	1	0	53	0.000	3.90E-03	**0.00E+00**
08	Diesel Generators	DGR	1	1	0	4	0.000	2.10E-02	**0.00E+00**
09	Air Compressors	XX	1	1	0	4	0.000	2.40E-03	**0.00E+00**
10	Battery Chargers	XX	1	1	0	15	0.000	1.80E-03	**0.00E+00**
11	Cable Fires caused by welding and cutting (Plant-Wide)	XX	0	1	0	430	0.000	2.00E-03	**0.00E+00**
12	Cable Run	XX	1	1	0	1820	0.000	4.40E-03	**0.00E+00**
13	Dryers	XX	1	1	0	2	0.000	2.60E-03	**0.00E+00**
14	Electric Motors	XX	1	1	0	8	0.000	4.60E-03	**0.00E+00**
15	Electrical Cabinets	XX	1	1	2	530	0.004	4.50E-02	**1.70E-04**
16	High Energy Arcing Faults	XX	1	1	0	77	0.000	1.50E-03	**0.00E+00**
17	Hydrogen Tanks	XX	1	1	0	2	0.000	1.70E-03	**0.00E+00**
18	Junction Boxes	XX	1	1	0	1820	0.000	1.90E-03	**0.00E+00**
19	Misc. Hydrogen Fires	XX	1	1	0	0	0.000	2.50E-03	**0.00E+00**
20	Off-gas/H2 Recombiner (BWR)	XX	1	1	0	2	0.000	4.40E-02	**0.00E+00**
21	Pumps	XX	1	1	0	43	0.000	2.10E-02	**0.00E+00**
22	RPS MG Sets	XX	0	1	0	0	0.000	1.60E-03	**0.00E+00**
23a	Transformers (oil filled)	XX	1	1	0	0	0.000	9.90E-03	**0.00E+00**
23b	Transformers (dry)	XX	1	1	0	67	0.000	9.90E-03	**0.00E+00**
24	Transient fires caused by welding and cutting (Plant-Wide)	XX	0	1	0	78	0.000	4.90E-03	**0.00E+00**
25	Transients (Plant-Wide)	XX	0	1	0	78	0.000	9.90E-03	**0.00E+00**
26	Ventilation Subsystems	XX	1	1	0	26	0.000	7.40E-03	**0.00E+00**
27	Transformer - Catastrophic	TY	0	1	0	9	0.000	6.00E-03	**0.00E+00**
28	Transformer - Non Catastrophic	TY	0	1	0	8	0.000	1.20E-02	**0.00E+00**
29	Yard Transformers (others)	TY	0	1	0	1	0.000	2.20E-03	**0.00E+00**
30	Boiler	TB	1	1	0	2	0.000	1.10E-03	**0.00E+00**
31	Cable Fires caused by welding and cutting (Turbine Building)	TB	1	1	0	224	0.000	1.60E-03	**0.00E+00**
32	Main Feedwater Pumps	TB	1	1	0	8	0.000	1.30E-02	**0.00E+00**
33	Turbine Generator Excitor	TB	1	1	0	1	0.000	3.90E-03	**0.00E+00**
34	Turbine Generator Hydrogen	TB	1	1	0	1	0.000	6.50E-03	**0.00E+00**
35	Turbine Generator Oil	TB	1	1	0	1	0.000	9.50E-03	**0.00E+00**
36	Transient fires caused by welding and cutting (Turbine Building)	TB	1	1	1	17	0.059	8.20E-03	**4.82E-04**
37	Transients (Turbine Building)	TB	1	1	1	17	0.059	8.50E-03	**5.00E-04**
Compartment Fire Frequency (FL)			**1.15E-03**						
Notes:									
(A) Number of Ignition Sources in Compartment									
(B) Total Number of Ignition Sources in Selected Plant Location or in Plant for Plant Wide Components									
*Ignition Source Frequency: FIF = WFL*WFIS*FF*									
Compartment Fire Frequency: FL = SUM(FIF)									

Table 12A-42

F5100 - Fire Compartment Ignition Source Data Sheet (ISDS)

Compartment Description									
	Fire Area		Fire Area F5100						
	Fire Compartment		F5100	Corridors					
Compartment Fire Ignition Frequency									
Step 1.1	Plant Location ID		XX						
	Plant Location Description		Plant-Wide						
Step 1.2	Location Weighting Factor (WFL)		1.00E+00	Plant Location					
	Location Weighting Factor (WFL)		1.00E+00	Plant Wide Components					
Compartment Ignition Sources		Plant	App. to	Weighting	Sources in	Sources in	Weighting	Fire	**Ignition Source**
(FIF)		Location	This Area	Factor	Compartment	Plant Location	Factor	Frequency	**Frequency**
Bin #	Ignition Source	L	APP	WFL	(A)	(B)	WFIS=(A)/(B)	(FF)	**(FIF)**
01	Batteries	BR	1	1	0	21	0.000	7.50E-04	**0.00E+00**
02	Reactor Coolant Pump	COP	0	1	0	0	0.000	6.10E-03	**0.00E+00**
03	Transients and Hotwork	COP	0	1	0	0	0.000	2.00E-03	**0.00E+00**
04	Main Control Board	CR	0	1	0	0	0.000	2.50E-03	**0.00E+00**
05	Cable Fires caused by welding and cutting (Cntrl/Aux/Rx Building)	CAR	0	1	0	1166	0.000	1.60E-03	**0.00E+00**
06	Transient fires caused by welding and cutting (Cntrl/Aux/Rx Building)	CAR	0	1	0	53	0.000	9.70E-03	**0.00E+00**
07	Transients (Cntrl/Aux/Rx Building)	CAR	0	1	0	53	0.000	3.90E-03	**0.00E+00**
08	Diesel Generators	DGR	1	1	0	4	0.000	2.10E-02	**0.00E+00**
09	Air Compressors	XX	1	1	0	4	0.000	2.40E-03	**0.00E+00**
10	Battery Chargers	XX	1	1	0	15	0.000	1.80E-03	**0.00E+00**
11	Cable Fires caused by welding and cutting (Plant-Wide)	XX	1	1	5	430	0.012	2.00E-03	**2.33E-05**
12	Cable Run	XX	1	1	5	1820	0.003	4.40E-03	**1.21E-05**
13	Dryers	XX	1	1	0	2	0.000	2.60E-03	**0.00E+00**
14	Electric Motors	XX	1	1	0	8	0.000	4.60E-03	**0.00E+00**
15	Electrical Cabinets	XX	1	1	0	530	0.000	4.50E-02	**0.00E+00**
16	High Energy Arcing Faults	XX	1	1	0	77	0.000	1.50E-03	**0.00E+00**
17	Hydrogen Tanks	XX	1	1	0	2	0.000	1.70E-03	**0.00E+00**
18	Junction Boxes	XX	1	1	5	1820	0.003	1.90E-03	**5.22E-06**
19	Misc. Hydrogen Fires	XX	1	1	0	0	0.000	2.50E-03	**0.00E+00**
20	Off-gas/H2 Recombiner (BWR)	XX	1	1	0	2	0.000	4.40E-02	**0.00E+00**
21	Pumps	XX	1	1	0	43	0.000	2.10E-02	**0.00E+00**
22	RPS MG Sets	XX	0	1	0	0	0.000	1.60E-03	**0.00E+00**
23a	Transformers (oil filled)	XX	1	1	0	0	0.000	9.90E-03	**0.00E+00**
23b	Transformers (dry)	XX	1	1	0	67	0.000	9.90E-03	**0.00E+00**
24	Transient fires caused by welding and cutting (Plant-Wide)	XX	1	1	1	78	0.013	4.90E-03	**6.28E-05**
25	Transients (Plant-Wide)	XX	1	1	1	78	0.013	9.90E-03	**1.27E-04**
26	Ventilation Subsystems	XX	1	1	0	26	0.000	7.40E-03	**0.00E+00**
27	Transformer - Catastrophic	TY	0	1	0	9	0.000	6.00E-03	**0.00E+00**
28	Transformer - Non Catastrophic	TY	0	1	0	8	0.000	1.20E-02	**0.00E+00**
29	Yard Transformers (others)	TY	0	1	0	1	0.000	2.20E-03	**0.00E+00**
30	Boiler	TB	0	1	0	2	0.000	1.10E-03	**0.00E+00**
31	Cable Fires caused by welding and cutting (Turbine Building)	TB	0	1	0	224	0.000	1.60E-03	**0.00E+00**
32	Main Feedwater Pumps	TB	1	1	0	8	0.000	1.30E-02	**0.00E+00**
33	Turbine Generator Excitor	TB	0	1	0	1	0.000	3.90E-03	**0.00E+00**
34	Turbine Generator Hydrogen	TB	0	1	0	1	0.000	6.50E-03	**0.00E+00**
35	Turbine Generator Oil	TB	0	1	0	1	0.000	9.50E-03	**0.00E+00**
36	Transient fires caused by welding and cutting (Turbine Building)	TB	0	1	0	17	0.000	8.20E-03	**0.00E+00**
37	Transients (Turbine Building)	TB	0	1	0	17	0.000	8.50E-03	**0.00E+00**
Compartment Fire Frequency (FL)			**2.30E-04**						
Notes:									
(A) Number of Ignition Sources in Compartment									
(B) Total Number of Ignition Sources in Selected Plant Location or in Plant for Plant Wide Components									
*Ignition Source Frequency: FIF = WFL*WFIS*FF*									
Compartment Fire Frequency: FL = SUM(FIF)									

Table 12A-43

F5151 - Fire Compartment Ignition Source Data Sheet (ISDS)

Compartment Description									
	Fire Area		Fire Area F5151						
	Fire Compartment		F5151	Batteries A					
Compartment Fire Ignition Frequency									
Step 1.1	Plant Location ID		BR						
	Plant Location Description		Battery Room						
Step 1.2	Location Weighting Factor (WFL)		1.00E+00	Plant Location					
	Location Weighting Factor (WFL)		1.00E+00	Plant Wide Components					
Compartment Ignition Sources		Plant	App. to	Weighting	Sources in	Sources in	Weighting	Fire	**Ignition Source**
(FIF)		Location	This Area	Factor	Compartment	Plant Location	Factor	Frequency	**Frequency**
Bin #	Ignition Source	L	APP	WFL	(A)	(B)	WFIS=(A)/(B)	(FF)	**(FIF)**
01	Batteries	BR	1	1	3	21	0.143	7.50E-04	**1.07E-04**
02	Reactor Coolant Pump	COP	0	1	0	0	0.000	6.10E-03	**0.00E+00**
03	Transients and Hotwork	COP	0	1	0	0	0.000	2.00E-03	**0.00E+00**
04	Main Control Board	CR	0	1	0	0	0.000	2.50E-03	**0.00E+00**
05	Cable Fires caused by welding and cutting (Cntrl/Aux/Rx Building)	CAR	0	1	0	1166	0.000	1.60E-03	**0.00E+00**
06	Transient fires caused by welding and cutting (Cntrl/Aux/Rx Building)	CAR	0	1	0	53	0.000	9.70E-03	**0.00E+00**
07	Transients (Cntrl/Aux/Rx Building)	CAR	0	1	0	53	0.000	3.90E-03	**0.00E+00**
08	Diesel Generators	DGR	1	1	0	4	0.000	2.10E-02	**0.00E+00**
09	Air Compressors	XX	1	1	0	4	0.000	2.40E-03	**0.00E+00**
10	Battery Chargers	XX	1	1	0	15	0.000	1.80E-03	**0.00E+00**
11	Cable Fires caused by welding and cutting (Plant-Wide)	XX	1	1	0	430	0.000	2.00E-03	**0.00E+00**
12	Cable Run	XX	1	1	0	1820	0.000	4.40E-03	**0.00E+00**
13	Dryers	XX	1	1	0	2	0.000	2.60E-03	**0.00E+00**
14	Electric Motors	XX	1	1	0	8	0.000	4.60E-03	**0.00E+00**
15	Electrical Cabinets	XX	1	1	3	530	0.006	4.50E-02	**2.55E-04**
16	High Energy Arcing Faults	XX	1	1	0	77	0.000	1.50E-03	**0.00E+00**
17	Hydrogen Tanks	XX	1	1	0	2	0.000	1.70E-03	**0.00E+00**
18	Junction Boxes	XX	1	1	0	1820	0.000	1.90E-03	**0.00E+00**
19	Misc. Hydrogen Fires	XX	1	1	0	0	0.000	2.50E-03	**0.00E+00**
20	Off-gas/H2 Recombiner (BWR)	XX	1	1	0	2	0.000	4.40E-02	**0.00E+00**
21	Pumps	XX	1	1	0	43	0.000	2.10E-02	**0.00E+00**
22	RPS MG Sets	XX	0	1	0	0	0.000	1.60E-03	**0.00E+00**
23a	Transformers (oil filled)	XX	1	1	0	0	0.000	9.90E-03	**0.00E+00**
23b	Transformers (dry)	XX	1	1	0	67	0.000	9.90E-03	**0.00E+00**
24	Transient fires caused by welding and cutting (Plant-Wide)	XX	1	1	1	78	0.013	4.90E-03	**6.28E-05**
25	Transients (Plant-Wide)	XX	1	1	1	78	0.013	9.90E-03	**1.27E-04**
26	Ventilation Subsystems	XX	1	1	0	26	0.000	7.40E-03	**0.00E+00**
27	Transformer - Catastrophic	TY	0	1	0	9	0.000	6.00E-03	**0.00E+00**
28	Transformer - Non Catastrophic	TY	0	1	0	8	0.000	1.20E-02	**0.00E+00**
29	Yard Transformers (others)	TY	0	1	0	1	0.000	2.20E-03	**0.00E+00**
30	Boiler	TB	0	1	0	2	0.000	1.10E-03	**0.00E+00**
31	Cable Fires caused by welding and cutting (Turbine Building)	TB	0	1	0	224	0.000	1.60E-03	**0.00E+00**
32	Main Feedwater Pumps	TB	1	1	0	8	0.000	1.30E-02	**0.00E+00**
33	Turbine Generator Excitor	TB	0	1	0	1	0.000	3.90E-03	**0.00E+00**
34	Turbine Generator Hydrogen	TB	0	1	0	1	0.000	6.50E-03	**0.00E+00**
35	Turbine Generator Oil	TB	0	1	0	1	0.000	9.50E-03	**0.00E+00**
36	Transient fires caused by welding and cutting (Turbine Building)	TB	0	1	0	17	0.000	8.20E-03	**0.00E+00**
37	Transients (Turbine Building)	TB	0	1	0	17	0.000	8.50E-03	**0.00E+00**
Compartment Fire Frequency (FL)			**5.52E-04**						
Notes:									
(A) Number of Ignition Sources in Compartment									
(B) Total Number of Ignition Sources in Selected Plant Location or in Plant for Plant Wide Components									
*Ignition Source Frequency: FIF = WFL*WFIS*FF*									
Compartment Fire Frequency: FL = SUM(FIF)									

Table 12A-44

F5153 - Fire Compartment Ignition Source Data Sheet (ISDS)

Compartment Description									
	Fire Area		Fire Area F5153						
	Fire Compartment		F5153	Diesel Generator A					
Compartment Fire Ignition Frequency									
Step 1.1	Plant Location ID		DGR						
	Plant Location Description		Diesel Generator Rooms						
Step 1.2	Location Weighting Factor (WFL)		1.00E+00	Plant Location					
	Location Weighting Factor (WFL)		1.00E+00	Plant Wide Components					
Compartment Ignition Sources		Plant	App. to	Weighting	Sources in	Sources in	Weighting	Fire	**Ignition Source**
(FIF)		Location	This Area	Factor	Compartment	Plant Location	Factor	Frequency	**Frequency**
Bin #	Ignition Source	L	APP	WFL	(A)	(B)	WFIS=(A)/(B)	(FF)	**(FIF)**
01	Batteries	BR	1	1	0	21	0.000	7.50E-04	**0.00E+00**
02	Reactor Coolant Pump	COP	0	1	0	0	0.000	6.10E-03	**0.00E+00**
03	Transients and Hotwork	COP	0	1	0	0	0.000	2.00E-03	**0.00E+00**
04	Main Control Board	CR	0	1	0	0	0.000	2.50E-03	**0.00E+00**
05	Cable Fires caused by welding and cutting (Cntrl/Aux/Rx Building)	CAR	0	1	0	1166	0.000	1.60E-03	**0.00E+00**
06	Transient fires caused by welding and cutting (Cntrl/Aux/Rx Building)	CAR	0	1	0	53	0.000	9.70E-03	**0.00E+00**
07	Transients (Cntrl/Aux/Rx Building)	CAR	0	1	0	53	0.000	3.90E-03	**0.00E+00**
08	Diesel Generators	DGR	1	1	1	4	0.250	2.10E-02	**5.25E-03**
09	Air Compressors	XX	1	1	0	4	0.000	2.40E-03	**0.00E+00**
10	Battery Chargers	XX	1	1	0	15	0.000	1.80E-03	**0.00E+00**
11	Cable Fires caused by welding and cutting (Plant-Wide)	XX	1	1	1	430	0.002	2.00E-03	**4.65E-06**
12	Cable Run	XX	1	1	1	1820	0.001	4.40E-03	**2.42E-06**
13	Dryers	XX	1	1	0	2	0.000	2.60E-03	**0.00E+00**
14	Electric Motors	XX	1	1	0	8	0.000	4.60E-03	**0.00E+00**
15	Electrical Cabinets	XX	1	1	0	530	0.000	4.50E-02	**0.00E+00**
16	High Energy Arcing Faults	XX	1	1	0	77	0.000	1.50E-03	**0.00E+00**
17	Hydrogen Tanks	XX	1	1	0	2	0.000	1.70E-03	**0.00E+00**
18	Junction Boxes	XX	1	1	1	1820	0.001	1.90E-03	**1.04E-06**
19	Misc. Hydrogen Fires	XX	1	1	0	0	0.000	2.50E-03	**0.00E+00**
20	Off-gas/H2 Recombiner (BWR)	XX	1	1	0	2	0.000	4.40E-02	**0.00E+00**
21	Pumps	XX	1	1	2	43	0.047	2.10E-02	**9.77E-04**
22	RPS MG Sets	XX	0	1	0	0	0.000	1.60E-03	**0.00E+00**
23a	Transformers (oil filled)	XX	1	1	0	0	0.000	9.90E-03	**0.00E+00**
23b	Transformers (dry)	XX	1	1	0	67	0.000	9.90E-03	**0.00E+00**
24	Transient fires caused by welding and cutting (Plant-Wide)	XX	1	1	1	78	0.013	4.90E-03	**6.28E-05**
25	Transients (Plant-Wide)	XX	1	1	1	78	0.013	9.90E-03	**1.27E-04**
26	Ventilation Subsystems	XX	1	1	8	26	0.308	7.40E-03	**2.28E-03**
27	Transformer - Catastrophic	TY	0	1	0	9	0.000	6.00E-03	**0.00E+00**
28	Transformer - Non Catastrophic	TY	0	1	0	8	0.000	1.20E-02	**0.00E+00**
29	Yard Transformers (others)	TY	0	1	0	1	0.000	2.20E-03	**0.00E+00**
30	Boiler	TB	0	1	0	2	0.000	1.10E-03	**0.00E+00**
31	Cable Fires caused by welding and cutting (Turbine Building)	TB	0	1	0	224	0.000	1.60E-03	**0.00E+00**
32	Main Feedwater Pumps	TB	1	1	0	8	0.000	1.30E-02	**0.00E+00**
33	Turbine Generator Excitor	TB	0	1	0	1	0.000	3.90E-03	**0.00E+00**
34	Turbine Generator Hydrogen	TB	0	1	0	1	0.000	6.50E-03	**0.00E+00**
35	Turbine Generator Oil	TB	0	1	0	1	0.000	9.50E-03	**0.00E+00**
36	Transient fires caused by welding and cutting (Turbine Building)	TB	0	1	0	17	0.000	8.20E-03	**0.00E+00**
37	Transients (Turbine Building)	TB	0	1	0	17	0.000	8.50E-03	**0.00E+00**
Compartment Fire Frequency (FL)			**8.70E-03**						
Notes:									
(A) Number of Ignition Sources in Compartment									
(B) Total Number of Ignition Sources in Selected Plant Location or in Plant for Plant Wide Components									
*Ignition Source Frequency: FIF = WFL*WFIS*FF*									
Compartment Fire Frequency: FL = SUM(FIF)									

Table 12A-45

F5154 - Fire Compartment Ignition Source Data Sheet (ISDS)

Compartment Description									
	Fire Area		Fire Area F5154						
	Fire Compartment		F5154	Cable Chase Train A					
Compartment Fire Ignition Frequency									
Step 1.1	Plant Location ID		XX						
	Plant Location Description		Plant-Wide						
Step 1.2	Location Weighting Factor (WFL)		1.00E+00	Plant Location					
	Location Weighting Factor (WFL)		1.00E+00	Plant Wide Components					
Compartment Ignition Sources		Plant	App. to	Weighting	Sources in	Sources in	Weighting	Fire	**Ignition Source**
(FIF)		Location	This Area	Factor	Compartment	Plant Location	Factor	Frequency	**Frequency**
Bin #	Ignition Source	L	APP	WFL	(A)	(B)	WFIS=(A)/(B)	(FF)	**(FIF)**
01	Batteries	BR	1	1	0	21	0.000	7.50E-04	**0.00E+00**
02	Reactor Coolant Pump	COP	0	1	0	0	0.000	6.10E-03	**0.00E+00**
03	Transients and Hotwork	COP	0	1	0	0	0.000	2.00E-03	**0.00E+00**
04	Main Control Board	CR	0	1	0	0	0.000	2.50E-03	**0.00E+00**
05	Cable Fires caused by welding and cutting (Cntrl/Aux/Rx Building)	CAR	0	1	0	1166	0.000	1.60E-03	**0.00E+00**
06	Transient fires caused by welding and cutting (Cntrl/Aux/Rx Building)	CAR	0	1	0	53	0.000	9.70E-03	**0.00E+00**
07	Transients (Cntrl/Aux/Rx Building)	CAR	0	1	0	53	0.000	3.90E-03	**0.00E+00**
08	Diesel Generators	DGR	1	1	0	4	0.000	2.10E-02	**0.00E+00**
09	Air Compressors	XX	1	1	0	4	0.000	2.40E-03	**0.00E+00**
10	Battery Chargers	XX	1	1	0	15	0.000	1.80E-03	**0.00E+00**
11	Cable Fires caused by welding and cutting (Plant-Wide)	XX	1	1	17	430	0.040	2.00E-03	**7.91E-05**
12	Cable Run	XX	1	1	17	1820	0.009	4.40E-03	**4.11E-05**
13	Dryers	XX	1	1	0	2	0.000	2.60E-03	**0.00E+00**
14	Electric Motors	XX	1	1	0	8	0.000	4.60E-03	**0.00E+00**
15	Electrical Cabinets	XX	1	1	0	530	0.000	4.50E-02	**0.00E+00**
16	High Energy Arcing Faults	XX	1	1	0	77	0.000	1.50E-03	**0.00E+00**
17	Hydrogen Tanks	XX	1	1	0	2	0.000	1.70E-03	**0.00E+00**
18	Junction Boxes	XX	1	1	17	1820	0.009	1.90E-03	**1.77E-05**
19	Misc. Hydrogen Fires	XX	1	1	0	0	0.000	2.50E-03	**0.00E+00**
20	Off-gas/H2 Recombiner (BWR)	XX	1	1	0	2	0.000	4.40E-02	**0.00E+00**
21	Pumps	XX	1	1	0	43	0.000	2.10E-02	**0.00E+00**
22	RPS MG Sets	XX	0	1	0	0	0.000	1.60E-03	**0.00E+00**
23a	Transformers (oil filled)	XX	1	1	0	0	0.000	9.90E-03	**0.00E+00**
23b	Transformers (dry)	XX	1	1	0	67	0.000	9.90E-03	**0.00E+00**
24	Transient fires caused by welding and cutting (Plant-Wide)	XX	1	1	1	78	0.013	4.90E-03	**6.28E-05**
25	Transients (Plant-Wide)	XX	1	1	1	78	0.013	9.90E-03	**1.27E-04**
26	Ventilation Subsystems	XX	1	1	0	26	0.000	7.40E-03	**0.00E+00**
27	Transformer - Catastrophic	TY	0	1	0	9	0.000	6.00E-03	**0.00E+00**
28	Transformer - Non Catastrophic	TY	0	1	0	8	0.000	1.20E-02	**0.00E+00**
29	Yard Transformers (others)	TY	0	1	0	1	0.000	2.20E-03	**0.00E+00**
30	Boiler	TB	0	1	0	2	0.000	1.10E-03	**0.00E+00**
31	Cable Fires caused by welding and cutting (Turbine Building)	TB	0	1	0	224	0.000	1.60E-03	**0.00E+00**
32	Main Feedwater Pumps	TB	1	1	0	8	0.000	1.30E-02	**0.00E+00**
33	Turbine Generator Excitor	TB	0	1	0	1	0.000	3.90E-03	**0.00E+00**
34	Turbine Generator Hydrogen	TB	0	1	0	1	0.000	6.50E-03	**0.00E+00**
35	Turbine Generator Oil	TB	0	1	0	1	0.000	9.50E-03	**0.00E+00**
36	Transient fires caused by welding and cutting (Turbine Building)	TB	0	1	0	17	0.000	8.20E-03	**0.00E+00**
37	Transients (Turbine Building)	TB	0	1	0	17	0.000	8.50E-03	**0.00E+00**
Compartment Fire Frequency (FL)			**3.28E-04**						
Notes:									
(A) Number of Ignition Sources in Compartment									
(B) Total Number of Ignition Sources in Selected Plant Location or in Plant for Plant Wide Components									
*Ignition Source Frequency: FIF = WFL*WFIS*FF*									
Compartment Fire Frequency: FL = SUM(FIF)									

Table 12A-46

F5157 - Fire Compartment Ignition Source Data Sheet (ISDS)

Compartment Description									
	Fire Area		Fire Area F5157						
	Fire Compartment		F5157	Reserve Auxiliary Transformer A					
Compartment Fire Ignition Frequency									
Step 1.1	Plant Location ID		XX						
	Plant Location Description		Plant-Wide						
Step 1.2	Location Weighting Factor (WFL)		1.00E+00	Plant Location					
	Location Weighting Factor (WFL)		1.00E+00	Plant Wide Components					
Compartment Ignition Sources		Plant	App. to	Weighting	Sources in	Sources in	Weighting	Fire	**Ignition Source**
(FIF)		Location	This Area	Factor	Compartment	Plant Location	Factor	Frequency	**Frequency**
Bin #	Ignition Source	L	APP	WFL	(A)	(B)	WFIS=(A)/(B)	(FF)	**(FIF)**
01	Batteries	BR	1	1	0	21	0.000	7.50E-04	**0.00E+00**
02	Reactor Coolant Pump	COP	0	1	0	0	0.000	6.10E-03	**0.00E+00**
03	Transients and Hotwork	COP	0	1	0	0	0.000	2.00E-03	**0.00E+00**
04	Main Control Board	CR	0	1	0	0	0.000	2.50E-03	**0.00E+00**
05	Cable Fires caused by welding and cutting (Cntrl/Aux/Rx Building)	CAR	0	1	0	1166	0.000	1.60E-03	**0.00E+00**
06	Transient fires caused by welding and cutting (Cntrl/Aux/Rx Building)	CAR	0	1	0	53	0.000	9.70E-03	**0.00E+00**
07	Transients (Cntrl/Aux/Rx Building)	CAR	0	1	0	53	0.000	3.90E-03	**0.00E+00**
08	Diesel Generators	DGR	1	1	0	4	0.000	2.10E-02	**0.00E+00**
09	Air Compressors	XX	1	1	0	4	0.000	2.40E-03	**0.00E+00**
10	Battery Chargers	XX	1	1	0	15	0.000	1.80E-03	**0.00E+00**
11	Cable Fires caused by welding and cutting (Plant-Wide)	XX	1	1	0	430	0.000	2.00E-03	**0.00E+00**
12	Cable Run	XX	1	1	0	1820	0.000	4.40E-03	**0.00E+00**
13	Dryers	XX	1	1	0	2	0.000	2.60E-03	**0.00E+00**
14	Electric Motors	XX	1	1	0	8	0.000	4.60E-03	**0.00E+00**
15	Electrical Cabinets	XX	1	1	0	530	0.000	4.50E-02	**0.00E+00**
16	High Energy Arcing Faults	XX	1	1	0	77	0.000	1.50E-03	**0.00E+00**
17	Hydrogen Tanks	XX	1	1	0	2	0.000	1.70E-03	**0.00E+00**
18	Junction Boxes	XX	1	1	0	1820	0.000	1.90E-03	**0.00E+00**
19	Misc. Hydrogen Fires	XX	1	1	0	0	0.000	2.50E-03	**0.00E+00**
20	Off-gas/H2 Recombiner (BWR)	XX	1	1	0	2	0.000	4.40E-02	**0.00E+00**
21	Pumps	XX	1	1	0	43	0.000	2.10E-02	**0.00E+00**
22	RPS MG Sets	XX	0	1	0	0	0.000	1.60E-03	**0.00E+00**
23a	Transformers (oil filled)	XX	1	1	0	0	0.000	9.90E-03	**0.00E+00**
23b	Transformers (dry)	XX	1	1	0	67	0.000	9.90E-03	**0.00E+00**
24	Transient fires caused by welding and cutting (Plant-Wide)	XX	1	1	1	78	0.013	4.90E-03	**6.28E-05**
25	Transients (Plant-Wide)	XX	1	1	1	78	0.013	9.90E-03	**1.27E-04**
26	Ventilation Subsystems	XX	1	1	0	26	0.000	7.40E-03	**0.00E+00**
27	Transformer - Catastrophic	TY	0	1	1	9	0.111	6.00E-03	**6.67E-04**
28	Transformer - Non Catastrophic	TY	0	1	1	8	0.125	1.20E-02	**1.50E-03**
29	Yard Transformers (others)	TY	0	1	0	1	0.000	2.20E-03	**0.00E+00**
30	Boiler	TB	0	1	0	2	0.000	1.10E-03	**0.00E+00**
31	Cable Fires caused by welding and cutting (Turbine Building)	TB	0	1	0	224	0.000	1.60E-03	**0.00E+00**
32	Main Feedwater Pumps	TB	1	1	0	8	0.000	1.30E-02	**0.00E+00**
33	Turbine Generator Excitor	TB	0	1	0	1	0.000	3.90E-03	**0.00E+00**
34	Turbine Generator Hydrogen	TB	0	1	0	1	0.000	6.50E-03	**0.00E+00**
35	Turbine Generator Oil	TB	0	1	0	1	0.000	9.50E-03	**0.00E+00**
36	Transient fires caused by welding and cutting (Turbine Building)	TB	0	1	0	17	0.000	8.20E-03	**0.00E+00**
37	Transients (Turbine Building)	TB	0	1	0	17	0.000	8.50E-03	**0.00E+00**
Compartment Fire Frequency (FL)			**2.36E-03**						
Notes:									
(A) Number of Ignition Sources in Compartment									
(B) Total Number of Ignition Sources in Selected Plant Location or in Plant for Plant Wide Components									
*Ignition Source Frequency: FIF = WFL*WFIS*FF*									
Compartment Fire Frequency: FL = SUM(FIF)									

Table 12A-47

F5158 - Fire Compartment Ignition Source Data Sheet (ISDS)

Compartment Description									
	Fire Area		Fire Area F5158						
	Fire Compartment		F5158	Unit Auxiliary Transformer A					
Compartment Fire Ignition Frequency									
Step 1.1	Plant Location ID		XX						
	Plant Location Description		Plant-Wide						
Step 1.2	Location Weighting Factor (WFL)		1.00E+00	Plant Location					
	Location Weighting Factor (WFL)		1.00E+00	Plant Wide Components					
Compartment Ignition Sources		Plant	App. to	Weighting	Sources in	Sources in	Weighting	Fire	**Ignition Source**
(FIF)		Location	This Area	Factor	Compartment	Plant Location	Factor	Frequency	**Frequency**
Bin #	Ignition Source	L	APP	WFL	(A)	(B)	WFIS=(A)/(B)	(FF)	**(FIF)**
01	Batteries	BR	1	1	0	21	0.000	7.50E-04	**0.00E+00**
02	Reactor Coolant Pump	COP	0	1	0	0	0.000	6.10E-03	**0.00E+00**
03	Transients and Hotwork	COP	0	1	0	0	0.000	2.00E-03	**0.00E+00**
04	Main Control Board	CR	0	1	0	0	0.000	2.50E-03	**0.00E+00**
05	Cable Fires caused by welding and cutting (Cntrl/Aux/Rx Building)	CAR	0	1	0	1166	0.000	1.60E-03	**0.00E+00**
06	Transient fires caused by welding and cutting (Cntrl/Aux/Rx Building)	CAR	0	1	0	53	0.000	9.70E-03	**0.00E+00**
07	Transients (Cntrl/Aux/Rx Building)	CAR	0	1	0	53	0.000	3.90E-03	**0.00E+00**
08	Diesel Generators	DGR	1	1	0	4	0.000	2.10E-02	**0.00E+00**
09	Air Compressors	XX	1	1	0	4	0.000	2.40E-03	**0.00E+00**
10	Battery Chargers	XX	1	1	0	15	0.000	1.80E-03	**0.00E+00**
11	Cable Fires caused by welding and cutting (Plant-Wide)	XX	1	1	0	430	0.000	2.00E-03	**0.00E+00**
12	Cable Run	XX	1	1	0	1820	0.000	4.40E-03	**0.00E+00**
13	Dryers	XX	1	1	0	2	0.000	2.60E-03	**0.00E+00**
14	Electric Motors	XX	1	1	0	8	0.000	4.60E-03	**0.00E+00**
15	Electrical Cabinets	XX	1	1	0	530	0.000	4.50E-02	**0.00E+00**
16	High Energy Arcing Faults	XX	1	1	0	77	0.000	1.50E-03	**0.00E+00**
17	Hydrogen Tanks	XX	1	1	0	2	0.000	1.70E-03	**0.00E+00**
18	Junction Boxes	XX	1	1	0	1820	0.000	1.90E-03	**0.00E+00**
19	Misc. Hydrogen Fires	XX	1	1	0	0	0.000	2.50E-03	**0.00E+00**
20	Off-gas/H2 Recombiner (BWR)	XX	1	1	0	2	0.000	4.40E-02	**0.00E+00**
21	Pumps	XX	1	1	0	43	0.000	2.10E-02	**0.00E+00**
22	RPS MG Sets	XX	0	1	0	0	0.000	1.60E-03	**0.00E+00**
23a	Transformers (oil filled)	XX	1	1	0	0	0.000	9.90E-03	**0.00E+00**
23b	Transformers (dry)	XX	1	1	0	67	0.000	9.90E-03	**0.00E+00**
24	Transient fires caused by welding and cutting (Plant-Wide)	XX	1	1	1	78	0.013	4.90E-03	**6.28E-05**
25	Transients (Plant-Wide)	XX	1	1	1	78	0.013	9.90E-03	**1.27E-04**
26	Ventilation Subsystems	XX	1	1	0	26	0.000	7.40E-03	**0.00E+00**
27	Transformer - Catastrophic	TY	0	1	1	9	0.111	6.00E-03	**6.67E-04**
28	Transformer - Non Catastrophic	TY	0	1	1	8	0.125	1.20E-02	**1.50E-03**
29	Yard Transformers (others)	TY	0	1	0	1	0.000	2.20E-03	**0.00E+00**
30	Boiler	TB	0	1	0	2	0.000	1.10E-03	**0.00E+00**
31	Cable Fires caused by welding and cutting (Turbine Building)	TB	0	1	0	224	0.000	1.60E-03	**0.00E+00**
32	Main Feedwater Pumps	TB	1	1	0	8	0.000	1.30E-02	**0.00E+00**
33	Turbine Generator Excitor	TB	0	1	0	1	0.000	3.90E-03	**0.00E+00**
34	Turbine Generator Hydrogen	TB	0	1	0	1	0.000	6.50E-03	**0.00E+00**
35	Turbine Generator Oil	TB	0	1	0	1	0.000	9.50E-03	**0.00E+00**
36	Transient fires caused by welding and cutting (Turbine Building)	TB	0	1	0	17	0.000	8.20E-03	**0.00E+00**
37	Transients (Turbine Building)	TB	0	1	0	17	0.000	8.50E-03	**0.00E+00**
Compartment Fire Frequency (FL)			**2.36E-03**						
Notes:									
(A) Number of Ignition Sources in Compartment									
(B) Total Number of Ignition Sources in Selected Plant Location or in Plant for Plant Wide Components									
*Ignition Source Frequency: FIF = WFL*WFIS*FF*									
Compartment Fire Frequency: FL = SUM(FIF)									

Table 12A-48

F5161 - Fire Compartment Ignition Source Data Sheet (ISDS)

Compartment Description									
	Fire Area		Fire Area F5161						
	Fire Compartment		F5161	Batteries B					
Compartment Fire Ignition Frequency									
Step 1.1	Plant Location ID		BR						
	Plant Location Description		Battery Room						
Step 1.2	Location Weighting Factor (WFL)		1.00E+00	Plant Location					
	Location Weighting Factor (WFL)		1.00E+00	Plant Wide Components					
Compartment Ignition Sources		Plant	App. to	Weighting	Sources in	Sources in	Weighting	Fire	**Ignition Source**
(FIF)		Location	This Area	Factor	Compartment	Plant Location	Factor	Frequency	**Frequency**
Bin #	Ignition Source	L	APP	WFL	(A)	(B)	WFIS=(A)/(B)	(FF)	**(FIF)**
01	Batteries	BR	1	1	3	21	0.143	7.50E-04	**1.07E-04**
02	Reactor Coolant Pump	COP	0	1	0	0	0.000	6.10E-03	**0.00E+00**
03	Transients and Hotwork	COP	0	1	0	0	0.000	2.00E-03	**0.00E+00**
04	Main Control Board	CR	0	1	0	0	0.000	2.50E-03	**0.00E+00**
05	Cable Fires caused by welding and cutting (Cntrl/Aux/Rx Building)	CAR	0	1	0	1166	0.000	1.60E-03	**0.00E+00**
06	Transient fires caused by welding and cutting (Cntrl/Aux/Rx Building)	CAR	0	1	0	53	0.000	9.70E-03	**0.00E+00**
07	Transients (Cntrl/Aux/Rx Building)	CAR	0	1	0	53	0.000	3.90E-03	**0.00E+00**
08	Diesel Generators	DGR	1	1	0	4	0.000	2.10E-02	**0.00E+00**
09	Air Compressors	XX	1	1	0	4	0.000	2.40E-03	**0.00E+00**
10	Battery Chargers	XX	1	1	0	15	0.000	1.80E-03	**0.00E+00**
11	Cable Fires caused by welding and cutting (Plant-Wide)	XX	1	1	0	430	0.000	2.00E-03	**0.00E+00**
12	Cable Run	XX	1	1	0	1820	0.000	4.40E-03	**0.00E+00**
13	Dryers	XX	1	1	0	2	0.000	2.60E-03	**0.00E+00**
14	Electric Motors	XX	1	1	0	8	0.000	4.60E-03	**0.00E+00**
15	Electrical Cabinets	XX	1	1	3	530	0.006	4.50E-02	**2.55E-04**
16	High Energy Arcing Faults	XX	1	1	0	77	0.000	1.50E-03	**0.00E+00**
17	Hydrogen Tanks	XX	1	1	0	2	0.000	1.70E-03	**0.00E+00**
18	Junction Boxes	XX	1	1	0	1820	0.000	1.90E-03	**0.00E+00**
19	Misc. Hydrogen Fires	XX	1	1	0	0	0.000	2.50E-03	**0.00E+00**
20	Off-gas/H2 Recombiner (BWR)	XX	1	1	0	2	0.000	4.40E-02	**0.00E+00**
21	Pumps	XX	1	1	0	43	0.000	2.10E-02	**0.00E+00**
22	RPS MG Sets	XX	0	1	0	0	0.000	1.60E-03	**0.00E+00**
23a	Transformers (oil filled)	XX	1	1	0	0	0.000	9.90E-03	**0.00E+00**
23b	Transformers (dry)	XX	1	1	0	67	0.000	9.90E-03	**0.00E+00**
24	Transient fires caused by welding and cutting (Plant-Wide)	XX	1	1	1	78	0.013	4.90E-03	**6.28E-05**
25	Transients (Plant-Wide)	XX	1	1	1	78	0.013	9.90E-03	**1.27E-04**
26	Ventilation Subsystems	XX	1	1	0	26	0.000	7.40E-03	**0.00E+00**
27	Transformer - Catastrophic	TY	0	1	0	9	0.000	6.00E-03	**0.00E+00**
28	Transformer - Non Catastrophic	TY	0	1	0	8	0.000	1.20E-02	**0.00E+00**
29	Yard Transformers (others)	TY	0	1	0	1	0.000	2.20E-03	**0.00E+00**
30	Boiler	TB	0	1	0	2	0.000	1.10E-03	**0.00E+00**
31	Cable Fires caused by welding and cutting (Turbine Building)	TB	0	1	0	224	0.000	1.60E-03	**0.00E+00**
32	Main Feedwater Pumps	TB	1	1	0	8	0.000	1.30E-02	**0.00E+00**
33	Turbine Generator Excitor	TB	0	1	0	1	0.000	3.90E-03	**0.00E+00**
34	Turbine Generator Hydrogen	TB	0	1	0	1	0.000	6.50E-03	**0.00E+00**
35	Turbine Generator Oil	TB	0	1	0	1	0.000	9.50E-03	**0.00E+00**
36	Transient fires caused by welding and cutting (Turbine Building)	TB	0	1	0	17	0.000	8.20E-03	**0.00E+00**
37	Transients (Turbine Building)	TB	0	1	0	17	0.000	8.50E-03	**0.00E+00**
Compartment Fire Frequency (FL)			**5.52E-04**						
Notes:									
(A) Number of Ignition Sources in Compartment									
(B) Total Number of Ignition Sources in Selected Plant Location or in Plant for Plant Wide Components									
*Ignition Source Frequency: FIF = WFL*WFIS*FF*									
Compartment Fire Frequency: FL = SUM(FIF)									

Table 12A-49

F5163 - Fire Compartment Ignition Source Data Sheet (ISDS)

Compartment Description									
	Fire Area		Fire Area F5163						
	Fire Compartment		F5163	Diesel Generator B					
Compartment Fire Ignition Frequency									
Step 1.1	Plant Location ID		DGR						
	Plant Location Description		Diesel Generator Rooms						
Step 1.2	Location Weighting Factor (WFL)		1.00E+00	Plant Location					
	Location Weighting Factor (WFL)		1.00E+00	Plant Wide Components					
Compartment Ignition Sources		Plant	App. to	Weighting	Sources in	Sources in	Weighting	Fire	**Ignition Source**
(FIF)		Location	This Area	Factor	Compartment	Plant Location	Factor	Frequency	**Frequency**
Bin #	Ignition Source	L	APP	WFL	(A)	(B)	WFIS=(A)/(B)	(FF)	**(FIF)**
01	Batteries	BR	1	1	0	21	0.000	7.50E-04	**0.00E+00**
02	Reactor Coolant Pump	COP	0	1	0	0	0.000	6.10E-03	**0.00E+00**
03	Transients and Hotwork	COP	0	1	0	0	0.000	2.00E-03	**0.00E+00**
04	Main Control Board	CR	0	1	0	0	0.000	2.50E-03	**0.00E+00**
05	Cable Fires caused by welding and cutting (Cntrl/Aux/Rx Building)	CAR	0	1	0	1166	0.000	1.60E-03	**0.00E+00**
06	Transient fires caused by welding and cutting (Cntrl/Aux/Rx Building)	CAR	0	1	0	53	0.000	9.70E-03	**0.00E+00**
07	Transients (Cntrl/Aux/Rx Building)	CAR	0	1	0	53	0.000	3.90E-03	**0.00E+00**
08	Diesel Generators	DGR	1	1	1	4	0.250	2.10E-02	**5.25E-03**
09	Air Compressors	XX	1	1	0	4	0.000	2.40E-03	**0.00E+00**
10	Battery Chargers	XX	1	1	0	15	0.000	1.80E-03	**0.00E+00**
11	Cable Fires caused by welding and cutting (Plant-Wide)	XX	1	1	1	430	0.002	2.00E-03	**4.65E-06**
12	Cable Run	XX	1	1	1	1820	0.001	4.40E-03	**2.42E-06**
13	Dryers	XX	1	1	0	2	0.000	2.60E-03	**0.00E+00**
14	Electric Motors	XX	1	1	0	8	0.000	4.60E-03	**0.00E+00**
15	Electrical Cabinets	XX	1	1	0	530	0.000	4.50E-02	**0.00E+00**
16	High Energy Arcing Faults	XX	1	1	0	77	0.000	1.50E-03	**0.00E+00**
17	Hydrogen Tanks	XX	1	1	0	2	0.000	1.70E-03	**0.00E+00**
18	Junction Boxes	XX	1	1	1	1820	0.001	1.90E-03	**1.04E-06**
19	Misc. Hydrogen Fires	XX	1	1	0	0	0.000	2.50E-03	**0.00E+00**
20	Off-gas/H2 Recombiner (BWR)	XX	1	1	0	2	0.000	4.40E-02	**0.00E+00**
21	Pumps	XX	1	1	2	43	0.047	2.10E-02	**9.77E-04**
22	RPS MG Sets	XX	0	1	0	0	0.000	1.60E-03	**0.00E+00**
23a	Transformers (oil filled)	XX	1	1	0	0	0.000	9.90E-03	**0.00E+00**
23b	Transformers (dry)	XX	1	1	0	67	0.000	9.90E-03	**0.00E+00**
24	Transient fires caused by welding and cutting (Plant-Wide)	XX	1	1	1	78	0.013	4.90E-03	**6.28E-05**
25	Transients (Plant-Wide)	XX	1	1	1	78	0.013	9.90E-03	**1.27E-04**
26	Ventilation Subsystems	XX	1	1	8	26	0.308	7.40E-03	**2.28E-03**
27	Transformer - Catastrophic	TY	0	1	0	9	0.000	6.00E-03	**0.00E+00**
28	Transformer - Non Catastrophic	TY	0	1	0	8	0.000	1.20E-02	**0.00E+00**
29	Yard Transformers (others)	TY	0	1	0	1	0.000	2.20E-03	**0.00E+00**
30	Boiler	TB	0	1	0	2	0.000	1.10E-03	**0.00E+00**
31	Cable Fires caused by welding and cutting (Turbine Building)	TB	0	1	0	224	0.000	1.60E-03	**0.00E+00**
32	Main Feedwater Pumps	TB	1	1	0	8	0.000	1.30E-02	**0.00E+00**
33	Turbine Generator Excitor	TB	0	1	0	1	0.000	3.90E-03	**0.00E+00**
34	Turbine Generator Hydrogen	TB	0	1	0	1	0.000	6.50E-03	**0.00E+00**
35	Turbine Generator Oil	TB	0	1	0	1	0.000	9.50E-03	**0.00E+00**
36	Transient fires caused by welding and cutting (Turbine Building)	TB	0	1	0	17	0.000	8.20E-03	**0.00E+00**
37	Transients (Turbine Building)	TB	0	1	0	17	0.000	8.50E-03	**0.00E+00**
Compartment Fire Frequency (FL)			**8.70E-03**						
Notes:									
(A) Number of Ignition Sources in Compartment									
(B) Total Number of Ignition Sources in Selected Plant Location or in Plant for Plant Wide Components									
*Ignition Source Frequency: FIF = WFL*WFIS*FF*									
Compartment Fire Frequency: FL = SUM(FIF)									

Table 12A-50

F5164 - Fire Compartment Ignition Source Data Sheet (ISDS)

Compartment Description									
	Fire Area		Fire Area F5164						
	Fire Compartment		F5164	Cable Chase Train B					
Compartment Fire Ignition Frequency									
Step 1.1	Plant Location ID		XX						
	Plant Location Description		Plant-Wide						
Step 1.2	Location Weighting Factor (WFL)		1.00E+00	Plant Location					
	Location Weighting Factor (WFL)		1.00E+00	Plant Wide Components					
Compartment Ignition Sources		Plant	App. to	Weighting	Sources in	Sources in	Weighting	Fire	**Ignition Source**
(FIF)		Location	This Area	Factor	Compartment	Plant Location	Factor	Frequency	**Frequency**
Bin #	Ignition Source	L	APP	WFL	(A)	(B)	WFIS=(A)/(B)	(FF)	**(FIF)**
01	Batteries	BR	1	1	0	21	0.000	7.50E-04	**0.00E+00**
02	Reactor Coolant Pump	COP	0	1	0	0	0.000	6.10E-03	**0.00E+00**
03	Transients and Hotwork	COP	0	1	0	0	0.000	2.00E-03	**0.00E+00**
04	Main Control Board	CR	0	1	0	0	0.000	2.50E-03	**0.00E+00**
05	Cable Fires caused by welding and cutting (Cntrl/Aux/Rx Building)	CAR	0	1	0	1166	0.000	1.60E-03	**0.00E+00**
06	Transient fires caused by welding and cutting (Cntrl/Aux/Rx Building)	CAR	0	1	0	53	0.000	9.70E-03	**0.00E+00**
07	Transients (Cntrl/Aux/Rx Building)	CAR	0	1	0	53	0.000	3.90E-03	**0.00E+00**
08	Diesel Generators	DGR	1	1	0	4	0.000	2.10E-02	**0.00E+00**
09	Air Compressors	XX	1	1	0	4	0.000	2.40E-03	**0.00E+00**
10	Battery Chargers	XX	1	1	0	15	0.000	1.80E-03	**0.00E+00**
11	Cable Fires caused by welding and cutting (Plant-Wide)	XX	1	1	19	430	0.044	2.00E-03	**8.84E-05**
12	Cable Run	XX	1	1	19	1820	0.010	4.40E-03	**4.59E-05**
13	Dryers	XX	1	1	0	2	0.000	2.60E-03	**0.00E+00**
14	Electric Motors	XX	1	1	0	8	0.000	4.60E-03	**0.00E+00**
15	Electrical Cabinets	XX	1	1	0	530	0.000	4.50E-02	**0.00E+00**
16	High Energy Arcing Faults	XX	1	1	0	77	0.000	1.50E-03	**0.00E+00**
17	Hydrogen Tanks	XX	1	1	0	2	0.000	1.70E-03	**0.00E+00**
18	Junction Boxes	XX	1	1	19	1820	0.010	1.90E-03	**1.98E-05**
19	Misc. Hydrogen Fires	XX	1	1	0	0	0.000	2.50E-03	**0.00E+00**
20	Off-gas/H2 Recombiner (BWR)	XX	1	1	0	2	0.000	4.40E-02	**0.00E+00**
21	Pumps	XX	1	1	0	43	0.000	2.10E-02	**0.00E+00**
22	RPS MG Sets	XX	0	1	0	0	0.000	1.60E-03	**0.00E+00**
23a	Transformers (oil filled)	XX	1	1	0	0	0.000	9.90E-03	**0.00E+00**
23b	Transformers (dry)	XX	1	1	0	67	0.000	9.90E-03	**0.00E+00**
24	Transient fires caused by welding and cutting (Plant-Wide)	XX	1	1	1	78	0.013	4.90E-03	**6.28E-05**
25	Transients (Plant-Wide)	XX	1	1	1	78	0.013	9.90E-03	**1.27E-04**
26	Ventilation Subsystems	XX	1	1	0	26	0.000	7.40E-03	**0.00E+00**
27	Transformer - Catastrophic	TY	0	1	0	9	0.000	6.00E-03	**0.00E+00**
28	Transformer - Non Catastrophic	TY	0	1	0	8	0.000	1.20E-02	**0.00E+00**
29	Yard Transformers (others)	TY	0	1	0	1	0.000	2.20E-03	**0.00E+00**
30	Boiler	TB	0	1	0	2	0.000	1.10E-03	**0.00E+00**
31	Cable Fires caused by welding and cutting (Turbine Building)	TB	0	1	0	224	0.000	1.60E-03	**0.00E+00**
32	Main Feedwater Pumps	TB	1	1	0	8	0.000	1.30E-02	**0.00E+00**
33	Turbine Generator Excitor	TB	0	1	0	1	0.000	3.90E-03	**0.00E+00**
34	Turbine Generator Hydrogen	TB	0	1	0	1	0.000	6.50E-03	**0.00E+00**
35	Turbine Generator Oil	TB	0	1	0	1	0.000	9.50E-03	**0.00E+00**
36	Transient fires caused by welding and cutting (Turbine Building)	TB	0	1	0	17	0.000	8.20E-03	**0.00E+00**
37	Transients (Turbine Building)	TB	0	1	0	17	0.000	8.50E-03	**0.00E+00**
Compartment Fire Frequency (FL)			**3.44E-04**						
Notes:									
(A) Number of Ignition Sources in Compartment									
(B) Total Number of Ignition Sources in Selected Plant Location or in Plant for Plant Wide Components									
*Ignition Source Frequency: FIF = WFL*WFIS*FF*									
Compartment Fire Frequency: FL = SUM(FIF)									

Table 12A-51

F5167 - Fire Compartment Ignition Source Data Sheet (ISDS)

Compartment Description									
	Fire Area		Fire Area F5167						
	Fire Compartment		F5167	Reserve Auxiliary Transformer B					
Compartment Fire Ignition Frequency									
Step 1.1	Plant Location ID		XX						
	Plant Location Description		Plant-Wide						
Step 1.2	Location Weighting Factor (WFL)		1.00E+00	Plant Location					
	Location Weighting Factor (WFL)		1.00E+00	Plant Wide Components					
Compartment Ignition Sources		Plant	App. to	Weighting	Sources in	Sources in	Weighting	Fire	**Ignition Source**
(FIF)		Location	This Area	Factor	Compartment	Plant Location	Factor	Frequency	**Frequency**
Bin #	Ignition Source	L	APP	WFL	(A)	(B)	WFIS=(A)/(B)	(FF)	**(FIF)**
01	Batteries	BR	1	1	0	21	0.000	7.50E-04	**0.00E+00**
02	Reactor Coolant Pump	COP	0	1	0	0	0.000	6.10E-03	**0.00E+00**
03	Transients and Hotwork	COP	0	1	0	0	0.000	2.00E-03	**0.00E+00**
04	Main Control Board	CR	0	1	0	0	0.000	2.50E-03	**0.00E+00**
05	Cable Fires caused by welding and cutting (Cntrl/Aux/Rx Building)	CAR	0	1	0	1166	0.000	1.60E-03	**0.00E+00**
06	Transient fires caused by welding and cutting (Cntrl/Aux/Rx Building)	CAR	0	1	0	53	0.000	9.70E-03	**0.00E+00**
07	Transients (Cntrl/Aux/Rx Building)	CAR	0	1	0	53	0.000	3.90E-03	**0.00E+00**
08	Diesel Generators	DGR	1	1	0	4	0.000	2.10E-02	**0.00E+00**
09	Air Compressors	XX	1	1	0	4	0.000	2.40E-03	**0.00E+00**
10	Battery Chargers	XX	1	1	0	15	0.000	1.80E-03	**0.00E+00**
11	Cable Fires caused by welding and cutting (Plant-Wide)	XX	1	1	0	430	0.000	2.00E-03	**0.00E+00**
12	Cable Run	XX	1	1	0	1820	0.000	4.40E-03	**0.00E+00**
13	Dryers	XX	1	1	0	2	0.000	2.60E-03	**0.00E+00**
14	Electric Motors	XX	1	1	0	8	0.000	4.60E-03	**0.00E+00**
15	Electrical Cabinets	XX	1	1	0	530	0.000	4.50E-02	**0.00E+00**
16	High Energy Arcing Faults	XX	1	1	0	77	0.000	1.50E-03	**0.00E+00**
17	Hydrogen Tanks	XX	1	1	0	2	0.000	1.70E-03	**0.00E+00**
18	Junction Boxes	XX	1	1	0	1820	0.000	1.90E-03	**0.00E+00**
19	Misc. Hydrogen Fires	XX	1	1	0	0	0.000	2.50E-03	**0.00E+00**
20	Off-gas/H2 Recombiner (BWR)	XX	1	1	0	2	0.000	4.40E-02	**0.00E+00**
21	Pumps	XX	1	1	0	43	0.000	2.10E-02	**0.00E+00**
22	RPS MG Sets	XX	0	1	0	0	0.000	1.60E-03	**0.00E+00**
23a	Transformers (oil filled)	XX	1	1	0	0	0.000	9.90E-03	**0.00E+00**
23b	Transformers (dry)	XX	1	1	0	67	0.000	9.90E-03	**0.00E+00**
24	Transient fires caused by welding and cutting (Plant-Wide)	XX	1	1	1	78	0.013	4.90E-03	**6.28E-05**
25	Transients (Plant-Wide)	XX	1	1	1	78	0.013	9.90E-03	**1.27E-04**
26	Ventilation Subsystems	XX	1	1	0	26	0.000	7.40E-03	**0.00E+00**
27	Transformer - Catastrophic	TY	0	1	1	9	0.111	6.00E-03	**6.67E-04**
28	Transformer - Non Catastrophic	TY	0	1	1	8	0.125	1.20E-02	**1.50E-03**
29	Yard Transformers (others)	TY	0	1	0	1	0.000	2.20E-03	**0.00E+00**
30	Boiler	TB	0	1	0	2	0.000	1.10E-03	**0.00E+00**
31	Cable Fires caused by welding and cutting (Turbine Building)	TB	0	1	0	224	0.000	1.60E-03	**0.00E+00**
32	Main Feedwater Pumps	TB	1	1	0	8	0.000	1.30E-02	**0.00E+00**
33	Turbine Generator Excitor	TB	0	1	0	1	0.000	3.90E-03	**0.00E+00**
34	Turbine Generator Hydrogen	TB	0	1	0	1	0.000	6.50E-03	**0.00E+00**
35	Turbine Generator Oil	TB	0	1	0	1	0.000	9.50E-03	**0.00E+00**
36	Transient fires caused by welding and cutting (Turbine Building)	TB	0	1	0	17	0.000	8.20E-03	**0.00E+00**
37	Transients (Turbine Building)	TB	0	1	0	17	0.000	8.50E-03	**0.00E+00**
Compartment Fire Frequency (FL)			**2.36E-03**						
Notes:									
(A) Number of Ignition Sources in Compartment									
(B) Total Number of Ignition Sources in Selected Plant Location or in Plant for Plant Wide Components									
*Ignition Source Frequency: FIF = WFL*WFIS*FF*									
Compartment Fire Frequency: FL = SUM(FIF)									

Table 12A-52

F5168 - Fire Compartment Ignition Source Data Sheet (ISDS)

Compartment Description									
	Fire Area		Fire Area F5168						
	Fire Compartment		F5168	Unit Auxiliary Transformer B					
Compartment Fire Ignition Frequency									
Step 1.1	Plant Location ID		XX						
	Plant Location Description		Plant-Wide						
Step 1.2	Location Weighting Factor (WFL)		1.00E+00	Plant Location					
	Location Weighting Factor (WFL)		1.00E+00	Plant Wide Components					
Compartment Ignition Sources		Plant	App. to	Weighting	Sources in	Sources in	Weighting	Fire	**Ignition Source**
(FIF)		Location	This Area	Factor	Compartment	Plant Location	Factor	Frequency	**Frequency**
Bin #	Ignition Source	L	APP	WFL	(A)	(B)	WFIS=(A)/(B)	(FF)	**(FIF)**
01	Batteries	BR	1	1	0	21	0.000	7.50E-04	**0.00E+00**
02	Reactor Coolant Pump	COP	0	1	0	0	0.000	6.10E-03	**0.00E+00**
03	Transients and Hotwork	COP	0	1	0	0	0.000	2.00E-03	**0.00E+00**
04	Main Control Board	CR	0	1	0	0	0.000	2.50E-03	**0.00E+00**
05	Cable Fires caused by welding and cutting (Cntrl/Aux/Rx Building)	CAR	0	1	0	1166	0.000	1.60E-03	**0.00E+00**
06	Transient fires caused by welding and cutting (Cntrl/Aux/Rx Building)	CAR	0	1	0	53	0.000	9.70E-03	**0.00E+00**
07	Transients (Cntrl/Aux/Rx Building)	CAR	0	1	0	53	0.000	3.90E-03	**0.00E+00**
08	Diesel Generators	DGR	1	1	0	4	0.000	2.10E-02	**0.00E+00**
09	Air Compressors	XX	1	1	0	4	0.000	2.40E-03	**0.00E+00**
10	Battery Chargers	XX	1	1	0	15	0.000	1.80E-03	**0.00E+00**
11	Cable Fires caused by welding and cutting (Plant-Wide)	XX	1	1	0	430	0.000	2.00E-03	**0.00E+00**
12	Cable Run	XX	1	1	0	1820	0.000	4.40E-03	**0.00E+00**
13	Dryers	XX	1	1	0	2	0.000	2.60E-03	**0.00E+00**
14	Electric Motors	XX	1	1	0	8	0.000	4.60E-03	**0.00E+00**
15	Electrical Cabinets	XX	1	1	0	530	0.000	4.50E-02	**0.00E+00**
16	High Energy Arcing Faults	XX	1	1	0	77	0.000	1.50E-03	**0.00E+00**
17	Hydrogen Tanks	XX	1	1	0	2	0.000	1.70E-03	**0.00E+00**
18	Junction Boxes	XX	1	1	0	1820	0.000	1.90E-03	**0.00E+00**
19	Misc. Hydrogen Fires	XX	1	1	0	0	0.000	2.50E-03	**0.00E+00**
20	Off-gas/H2 Recombiner (BWR)	XX	1	1	0	2	0.000	4.40E-02	**0.00E+00**
21	Pumps	XX	1	1	0	43	0.000	2.10E-02	**0.00E+00**
22	RPS MG Sets	XX	0	1	0	0	0.000	1.60E-03	**0.00E+00**
23a	Transformers (oil filled)	XX	1	1	0	0	0.000	9.90E-03	**0.00E+00**
23b	Transformers (dry)	XX	1	1	0	67	0.000	9.90E-03	**0.00E+00**
24	Transient fires caused by welding and cutting (Plant-Wide)	XX	1	1	1	78	0.013	4.90E-03	**6.28E-05**
25	Transients (Plant-Wide)	XX	1	1	1	78	0.013	9.90E-03	**1.27E-04**
26	Ventilation Subsystems	XX	1	1	0	26	0.000	7.40E-03	**0.00E+00**
27	Transformer - Catastrophic	TY	0	1	1	9	0.111	6.00E-03	**6.67E-04**
28	Transformer - Non Catastrophic	TY	0	1	1	8	0.125	1.20E-02	**1.50E-03**
29	Yard Transformers (others)	TY	0	1	0	1	0.000	2.20E-03	**0.00E+00**
30	Boiler	TB	0	1	0	2	0.000	1.10E-03	**0.00E+00**
31	Cable Fires caused by welding and cutting (Turbine Building)	TB	0	1	0	224	0.000	1.60E-03	**0.00E+00**
32	Main Feedwater Pumps	TB	1	1	0	8	0.000	1.30E-02	**0.00E+00**
33	Turbine Generator Excitor	TB	0	1	0	1	0.000	3.90E-03	**0.00E+00**
34	Turbine Generator Hydrogen	TB	0	1	0	1	0.000	6.50E-03	**0.00E+00**
35	Turbine Generator Oil	TB	0	1	0	1	0.000	9.50E-03	**0.00E+00**
36	Transient fires caused by welding and cutting (Turbine Building)	TB	0	1	0	17	0.000	8.20E-03	**0.00E+00**
37	Transients (Turbine Building)	TB	0	1	0	17	0.000	8.50E-03	**0.00E+00**
Compartment Fire Frequency (FL)			**2.36E-03**						
Notes:									
(A) Number of Ignition Sources in Compartment									
(B) Total Number of Ignition Sources in Selected Plant Location or in Plant for Plant Wide Components									
*Ignition Source Frequency: FIF = WFL*WFIS*FF*									
Compartment Fire Frequency: FL = SUM(FIF)									

Table 12A-53

F5201 - Fire Compartment Ignition Source Data Sheet (ISDS)

Compartment Description									
	Fire Area		Fire Area F5201						
	Fire Compartment		F5201	Switchgear, Lower Cable & Battery Charger I					
Compartment Fire Ignition Frequency									
Step 1.1	Plant Location ID		XX						
	Plant Location Description		Plant-Wide						
Step 1.2	Location Weighting Factor (WFL)		1.00E+00	Plant Location					
	Location Weighting Factor (WFL)		1.00E+00	Plant Wide Components					
Compartment Ignition Sources (FIF)		Plant Location	App. to This Area	Weighting Factor	Sources in Compartment	Sources in Plant Location	Weighting Factor	Fire Frequency	**Ignition Source Frequency**
Bin #	Ignition Source	L	APP	WFL	(A)	(B)	WFIS=(A)/(B)	(FF)	**(FIF)**
01	Batteries	BR	1	1	0	21	0.000	7.50E-04	**0.00E+00**
02	Reactor Coolant Pump	COP	0	1	0	0	0.000	6.10E-03	**0.00E+00**
03	Transients and Hotwork	COP	0	1	0	0	0.000	2.00E-03	**0.00E+00**
04	Main Control Board	CR	0	1	0	0	0.000	2.50E-03	**0.00E+00**
05	Cable Fires caused by welding and cutting (Cntrl/Aux/Rx Building)	CAR	0	1	0	1166	0.000	1.60E-03	**0.00E+00**
06	Transient fires caused by welding and cutting (Cntrl/Aux/Rx Building)	CAR	0	1	0	53	0.000	9.70E-03	**0.00E+00**
07	Transients (Cntrl/Aux/Rx Building)	CAR	0	1	0	53	0.000	3.90E-03	**0.00E+00**
08	Diesel Generators	DGR	1	1	0	4	0.000	2.10E-02	**0.00E+00**
09	Air Compressors	XX	1	1	0	4	0.000	2.40E-03	**0.00E+00**
10	Battery Chargers	XX	1	1	0	15	0.000	1.80E-03	**0.00E+00**
11	Cable Fires caused by welding and cutting (Plant-Wide)	XX	1	1	10	430	0.023	2.00E-03	**4.65E-05**
12	Cable Run	XX	1	1	10	1820	0.005	4.40E-03	**2.42E-05**
13	Dryers	XX	1	1	0	2	0.000	2.60E-03	**0.00E+00**
14	Electric Motors	XX	1	1	0	8	0.000	4.60E-03	**0.00E+00**
15	Electrical Cabinets	XX	1	1	7	530	0.013	4.50E-02	**5.94E-04**
16	High Energy Arcing Faults	XX	1	1	2	77	0.026	1.50E-03	**3.90E-05**
17	Hydrogen Tanks	XX	1	1	0	2	0.000	1.70E-03	**0.00E+00**
18	Junction Boxes	XX	1	1	10	1820	0.005	1.90E-03	**1.04E-05**
19	Misc. Hydrogen Fires	XX	1	1	0	0	0.000	2.50E-03	**0.00E+00**
20	Off-gas/H2 Recombiner (BWR)	XX	1	1	0	2	0.000	4.40E-02	**0.00E+00**
21	Pumps	XX	1	1	0	43	0.000	2.10E-02	**0.00E+00**
22	RPS MG Sets	XX	0	1	0	0	0.000	1.60E-03	**0.00E+00**
23a	Transformers (oil filled)	XX	1	1	0	0	0.000	9.90E-03	**0.00E+00**
23b	Transformers (dry)	XX	1	1	0	67	0.000	9.90E-03	**0.00E+00**
24	Transient fires caused by welding and cutting (Plant-Wide)	XX	1	1	1	78	0.013	4.90E-03	**6.28E-05**
25	Transients (Plant-Wide)	XX	1	1	1	78	0.013	9.90E-03	**1.27E-04**
26	Ventilation Subsystems	XX	1	1	0	26	0.000	7.40E-03	**0.00E+00**
27	Transformer - Catastrophic	TY	0	1	0	9	0.000	6.00E-03	**0.00E+00**
28	Transformer - Non Catastrophic	TY	0	1	0	8	0.000	1.20E-02	**0.00E+00**
29	Yard Transformers (others)	TY	0	1	0	1	0.000	2.20E-03	**0.00E+00**
30	Boiler	TB	0	1	0	2	0.000	1.10E-03	**0.00E+00**
31	Cable Fires caused by welding and cutting (Turbine Building)	TB	0	1	0	224	0.000	1.60E-03	**0.00E+00**
32	Main Feedwater Pumps	TB	1	1	0	8	0.000	1.30E-02	**0.00E+00**
33	Turbine Generator Excitor	TB	0	1	0	1	0.000	3.90E-03	**0.00E+00**
34	Turbine Generator Hydrogen	TB	0	1	0	1	0.000	6.50E-03	**0.00E+00**
35	Turbine Generator Oil	TB	0	1	0	1	0.000	9.50E-03	**0.00E+00**
36	Transient fires caused by welding and cutting (Turbine Building)	TB	0	1	0	17	0.000	8.20E-03	**0.00E+00**
37	Transients (Turbine Building)	TB	0	1	0	17	0.000	8.50E-03	**0.00E+00**
Compartment Fire Frequency (FL)			**9.04E-04**						
Notes:									
(A) Number of Ignition Sources in Compartment									
(B) Total Number of Ignition Sources in Selected Plant Location or in Plant for Plant Wide Components									
*Ignition Source Frequency: FIF = WFL*WFIS*FF*									
Compartment Fire Frequency: FL = SUM(FIF)									

Table 12A-54

F5202 - Fire Compartment Ignition Source Data Sheet (ISDS)

Compartment Description									
	Fire Area		Fire Area F5202						
	Fire Compartment		F5202	Battery C					
Compartment Fire Ignition Frequency									
Step 1.1	Plant Location ID		BR						
	Plant Location Description		Battery Room						
Step 1.2	Location Weighting Factor (WFL)		1.00E+00	Plant Location					
	Location Weighting Factor (WFL)		1.00E+00	Plant Wide Components					
Compartment Ignition Sources		Plant	App. to	Weighting	Sources in	Sources in	Weighting	Fire	**Ignition Source**
(FIF)		Location	This Area	Factor	Compartment	Plant Location	Factor	Frequency	**Frequency**
Bin #	Ignition Source	L	APP	WFL	(A)	(B)	WFIS=(A)/(B)	(FF)	**(FIF)**
01	Batteries	BR	1	1	1	21	0.048	7.50E-04	**3.57E-05**
02	Reactor Coolant Pump	COP	0	1	0	0	0.000	6.10E-03	**0.00E+00**
03	Transients and Hotwork	COP	0	1	0	0	0.000	2.00E-03	**0.00E+00**
04	Main Control Board	CR	0	1	0	0	0.000	2.50E-03	**0.00E+00**
05	Cable Fires caused by welding and cutting (Cntrl/Aux/Rx Building)	CAR	0	1	0	1166	0.000	1.60E-03	**0.00E+00**
06	Transient fires caused by welding and cutting (Cntrl/Aux/Rx Building)	CAR	0	1	0	53	0.000	9.70E-03	**0.00E+00**
07	Transients (Cntrl/Aux/Rx Building)	CAR	0	1	0	53	0.000	3.90E-03	**0.00E+00**
08	Diesel Generators	DGR	1	1	0	4	0.000	2.10E-02	**0.00E+00**
09	Air Compressors	XX	1	1	0	4	0.000	2.40E-03	**0.00E+00**
10	Battery Chargers	XX	1	1	0	15	0.000	1.80E-03	**0.00E+00**
11	Cable Fires caused by welding and cutting (Plant-Wide)	XX	1	1	0	430	0.000	2.00E-03	**0.00E+00**
12	Cable Run	XX	1	1	0	1820	0.000	4.40E-03	**0.00E+00**
13	Dryers	XX	1	1	0	2	0.000	2.60E-03	**0.00E+00**
14	Electric Motors	XX	1	1	0	8	0.000	4.60E-03	**0.00E+00**
15	Electrical Cabinets	XX	1	1	0	530	0.000	4.50E-02	**0.00E+00**
16	High Energy Arcing Faults	XX	1	1	0	77	0.000	1.50E-03	**0.00E+00**
17	Hydrogen Tanks	XX	1	1	0	2	0.000	1.70E-03	**0.00E+00**
18	Junction Boxes	XX	1	1	0	1820	0.000	1.90E-03	**0.00E+00**
19	Misc. Hydrogen Fires	XX	1	1	0	0	0.000	2.50E-03	**0.00E+00**
20	Off-gas/H2 Recombiner (BWR)	XX	1	1	0	2	0.000	4.40E-02	**0.00E+00**
21	Pumps	XX	1	1	0	43	0.000	2.10E-02	**0.00E+00**
22	RPS MG Sets	XX	0	1	0	0	0.000	1.60E-03	**0.00E+00**
23a	Transformers (oil filled)	XX	1	1	0	0	0.000	9.90E-03	**0.00E+00**
23b	Transformers (dry)	XX	1	1	0	67	0.000	9.90E-03	**0.00E+00**
24	Transient fires caused by welding and cutting (Plant-Wide)	XX	1	1	1	78	0.013	4.90E-03	**6.28E-05**
25	Transients (Plant-Wide)	XX	1	1	1	78	0.013	9.90E-03	**1.27E-04**
26	Ventilation Subsystems	XX	1	1	0	26	0.000	7.40E-03	**0.00E+00**
27	Transformer - Catastrophic	TY	0	1	0	9	0.000	6.00E-03	**0.00E+00**
28	Transformer - Non Catastrophic	TY	0	1	0	8	0.000	1.20E-02	**0.00E+00**
29	Yard Transformers (others)	TY	0	1	0	1	0.000	2.20E-03	**0.00E+00**
30	Boiler	TB	0	1	0	2	0.000	1.10E-03	**0.00E+00**
31	Cable Fires caused by welding and cutting (Turbine Building)	TB	0	1	0	224	0.000	1.60E-03	**0.00E+00**
32	Main Feedwater Pumps	TB	1	1	0	8	0.000	1.30E-02	**0.00E+00**
33	Turbine Generator Excitor	TB	0	1	0	1	0.000	3.90E-03	**0.00E+00**
34	Turbine Generator Hydrogen	TB	0	1	0	1	0.000	6.50E-03	**0.00E+00**
35	Turbine Generator Oil	TB	0	1	0	1	0.000	9.50E-03	**0.00E+00**
36	Transient fires caused by welding and cutting (Turbine Building)	TB	0	1	0	17	0.000	8.20E-03	**0.00E+00**
37	Transients (Turbine Building)	TB	0	1	0	17	0.000	8.50E-03	**0.00E+00**
Compartment Fire Frequency (FL)			**2.25E-04**						
Notes:									
(A) Number of Ignition Sources in Compartment									
(B) Total Number of Ignition Sources in Selected Plant Location or in Plant for Plant Wide Components									
*Ignition Source Frequency: FIF = WFL*WFIS*FF*									
Compartment Fire Frequency: FL = SUM(FIF)									

Table 12A-55

F5203 - Fire Compartment Ignition Source Data Sheet (ISDS)

Compartment Description									
	Fire Area		Fire Area F5203						
	Fire Compartment		F5203	LC & Battery Charger III					
Compartment Fire Ignition Frequency									
Step 1.1	Plant Location ID		XX						
	Plant Location Description		Plant-Wide						
Step 1.2	Location Weighting Factor (WFL)		1.00E+00	Plant Location					
	Location Weighting Factor (WFL)		1.00E+00	Plant Wide Components					
Compartment Ignition Sources		Plant	App. to	Weighting	Sources in	Sources in	Weighting	Fire	**Ignition Source**
(FIF)		Location	This Area	Factor	Compartment	Plant Location	Factor	Frequency	**Frequency**
Bin #	Ignition Source	L	APP	WFL	(A)	(B)	WFIS=(A)/(B)	(FF)	**(FIF)**
01	Batteries	BR	1	1	0	21	0.000	7.50E-04	**0.00E+00**
02	Reactor Coolant Pump	COP	0	1	0	0	0.000	6.10E-03	**0.00E+00**
03	Transients and Hotwork	COP	0	1	0	0	0.000	2.00E-03	**0.00E+00**
04	Main Control Board	CR	0	1	0	0	0.000	2.50E-03	**0.00E+00**
05	Cable Fires caused by welding and cutting (Cntrl/Aux/Rx Building)	CAR	0	1	0	1166	0.000	1.60E-03	**0.00E+00**
06	Transient fires caused by welding and cutting (Cntrl/Aux/Rx Building)	CAR	0	1	0	53	0.000	9.70E-03	**0.00E+00**
07	Transients (Cntrl/Aux/Rx Building)	CAR	0	1	0	53	0.000	3.90E-03	**0.00E+00**
08	Diesel Generators	DGR	1	1	0	4	0.000	2.10E-02	**0.00E+00**
09	Air Compressors	XX	1	1	0	4	0.000	2.40E-03	**0.00E+00**
10	Battery Chargers	XX	1	1	1	15	0.067	1.80E-03	**1.20E-04**
11	Cable Fires caused by welding and cutting (Plant-Wide)	XX	1	1	4	430	0.009	2.00E-03	**1.86E-05**
12	Cable Run	XX	1	1	4	1820	0.002	4.40E-03	**9.67E-06**
13	Dryers	XX	1	1	0	2	0.000	2.60E-03	**0.00E+00**
14	Electric Motors	XX	1	1	0	8	0.000	4.60E-03	**0.00E+00**
15	Electrical Cabinets	XX	1	1	11	530	0.021	4.50E-02	**9.34E-04**
16	High Energy Arcing Faults	XX	1	1	5	77	0.065	1.50E-03	**9.74E-05**
17	Hydrogen Tanks	XX	1	1	0	2	0.000	1.70E-03	**0.00E+00**
18	Junction Boxes	XX	1	1	4	1820	0.002	1.90E-03	**4.18E-06**
19	Misc. Hydrogen Fires	XX	1	1	0	0	0.000	2.50E-03	**0.00E+00**
20	Off-gas/H2 Recombiner (BWR)	XX	1	1	0	2	0.000	4.40E-02	**0.00E+00**
21	Pumps	XX	1	1	0	43	0.000	2.10E-02	**0.00E+00**
22	RPS MG Sets	XX	0	1	0	0	0.000	1.60E-03	**0.00E+00**
23a	Transformers (oil filled)	XX	1	1	0	0	0.000	9.90E-03	**0.00E+00**
23b	Transformers (dry)	XX	1	1	6	67	0.090	9.90E-03	**8.87E-04**
24	Transient fires caused by welding and cutting (Plant-Wide)	XX	1	1	1	78	0.013	4.90E-03	**6.28E-05**
25	Transients (Plant-Wide)	XX	1	1	1	78	0.013	9.90E-03	**1.27E-04**
26	Ventilation Subsystems	XX	1	1	0	26	0.000	7.40E-03	**0.00E+00**
27	Transformer - Catastrophic	TY	0	1	0	9	0.000	6.00E-03	**0.00E+00**
28	Transformer - Non Catastrophic	TY	0	1	0	8	0.000	1.20E-02	**0.00E+00**
29	Yard Transformers (others)	TY	0	1	0	1	0.000	2.20E-03	**0.00E+00**
30	Boiler	TB	0	1	0	2	0.000	1.10E-03	**0.00E+00**
31	Cable Fires caused by welding and cutting (Turbine Building)	TB	0	1	0	224	0.000	1.60E-03	**0.00E+00**
32	Main Feedwater Pumps	TB	1	1	0	8	0.000	1.30E-02	**0.00E+00**
33	Turbine Generator Excitor	TB	0	1	0	1	0.000	3.90E-03	**0.00E+00**
34	Turbine Generator Hydrogen	TB	0	1	0	1	0.000	6.50E-03	**0.00E+00**
35	Turbine Generator Oil	TB	0	1	0	1	0.000	9.50E-03	**0.00E+00**
36	Transient fires caused by welding and cutting (Turbine Building)	TB	0	1	0	17	0.000	8.20E-03	**0.00E+00**
37	Transients (Turbine Building)	TB	0	1	0	17	0.000	8.50E-03	**0.00E+00**
Compartment Fire Frequency (FL)			**2.26E-03**						
Notes:									
(A) Number of Ignition Sources in Compartment									
(B) Total Number of Ignition Sources in Selected Plant Location or in Plant for Plant Wide Components									
*Ignition Source Frequency: FIF = WFL*WFIS*FF*									
Compartment Fire Frequency: FL = SUM(FIF)									

Table 12A-56

F5204 - Fire Compartment Ignition Source Data Sheet (ISDS)

Compartment Description									
	Fire Area		Fire Area F5204						
	Fire Compartment		F5204	Switchgear, Lower Cable & Battery Charger II					
Compartment Fire Ignition Frequency									
Step 1.1	Plant Location ID		XX						
	Plant Location Description		Plant-Wide						
Step 1.2	Location Weighting Factor (WFL)		1.00E+00	Plant Location					
	Location Weighting Factor (WFL)		1.00E+00	Plant Wide Components					
Compartment Ignition Sources (FIF)		Plant Location	App. to This Area	Weighting Factor	Sources in Compartment	Sources in Plant Location	Weighting Factor	Fire Frequency	**Ignition Source Frequency**
Bin #	Ignition Source	L	APP	WFL	(A)	(B)	WFIS=(A)/(B)	(FF)	**(FIF)**
01	Batteries	BR	1	1	0	21	0.000	7.50E-04	**0.00E+00**
02	Reactor Coolant Pump	COP	0	1	0	0	0.000	6.10E-03	**0.00E+00**
03	Transients and Hotwork	COP	0	1	0	0	0.000	2.00E-03	**0.00E+00**
04	Main Control Board	CR	0	1	0	0	0.000	2.50E-03	**0.00E+00**
05	Cable Fires caused by welding and cutting (Cntrl/Aux/Rx Building)	CAR	0	1	0	1166	0.000	1.60E-03	**0.00E+00**
06	Transient fires caused by welding and cutting (Cntrl/Aux/Rx Building)	CAR	0	1	0	53	0.000	9.70E-03	**0.00E+00**
07	Transients (Cntrl/Aux/Rx Building)	CAR	0	1	0	53	0.000	3.90E-03	**0.00E+00**
08	Diesel Generators	DGR	1	1	0	4	0.000	2.10E-02	**0.00E+00**
09	Air Compressors	XX	1	1	0	4	0.000	2.40E-03	**0.00E+00**
10	Battery Chargers	XX	1	1	0	15	0.000	1.80E-03	**0.00E+00**
11	Cable Fires caused by welding and cutting (Plant-Wide)	XX	1	1	10	430	0.023	2.00E-03	**4.65E-05**
12	Cable Run	XX	1	1	10	1820	0.005	4.40E-03	**2.42E-05**
13	Dryers	XX	1	1	0	2	0.000	2.60E-03	**0.00E+00**
14	Electric Motors	XX	1	1	0	8	0.000	4.60E-03	**0.00E+00**
15	Electrical Cabinets	XX	1	1	7	530	0.013	4.50E-02	**5.94E-04**
16	High Energy Arcing Faults	XX	1	1	2	77	0.026	1.50E-03	**3.90E-05**
17	Hydrogen Tanks	XX	1	1	0	2	0.000	1.70E-03	**0.00E+00**
18	Junction Boxes	XX	1	1	10	1820	0.005	1.90E-03	**1.04E-05**
19	Misc. Hydrogen Fires	XX	1	1	0	0	0.000	2.50E-03	**0.00E+00**
20	Off-gas/H2 Recombiner (BWR)	XX	1	1	0	2	0.000	4.40E-02	**0.00E+00**
21	Pumps	XX	1	1	0	43	0.000	2.10E-02	**0.00E+00**
22	RPS MG Sets	XX	0	1	0	0	0.000	1.60E-03	**0.00E+00**
23a	Transformers (oil filled)	XX	1	1	0	0	0.000	9.90E-03	**0.00E+00**
23b	Transformers (dry)	XX	1	1	0	67	0.000	9.90E-03	**0.00E+00**
24	Transient fires caused by welding and cutting (Plant-Wide)	XX	1	1	1	78	0.013	4.90E-03	**6.28E-05**
25	Transients (Plant-Wide)	XX	1	1	1	78	0.013	9.90E-03	**1.27E-04**
26	Ventilation Subsystems	XX	1	1	0	26	0.000	7.40E-03	**0.00E+00**
27	Transformer - Catastrophic	TY	0	1	0	9	0.000	6.00E-03	**0.00E+00**
28	Transformer - Non Catastrophic	TY	0	1	0	8	0.000	1.20E-02	**0.00E+00**
29	Yard Transformers (others)	TY	0	1	0	1	0.000	2.20E-03	**0.00E+00**
30	Boiler	TB	0	1	0	2	0.000	1.10E-03	**0.00E+00**
31	Cable Fires caused by welding and cutting (Turbine Building)	TB	0	1	0	224	0.000	1.60E-03	**0.00E+00**
32	Main Feedwater Pumps	TB	1	1	0	8	0.000	1.30E-02	**0.00E+00**
33	Turbine Generator Excitor	TB	0	1	0	1	0.000	3.90E-03	**0.00E+00**
34	Turbine Generator Hydrogen	TB	0	1	0	1	0.000	6.50E-03	**0.00E+00**
35	Turbine Generator Oil	TB	0	1	0	1	0.000	9.50E-03	**0.00E+00**
36	Transient fires caused by welding and cutting (Turbine Building)	TB	0	1	0	17	0.000	8.20E-03	**0.00E+00**
37	Transients (Turbine Building)	TB	0	1	0	17	0.000	8.50E-03	**0.00E+00**
Compartment Fire Frequency (FL)			**9.04E-04**						
Notes:									
(A) Number of Ignition Sources in Compartment									
(B) Total Number of Ignition Sources in Selected Plant Location or in Plant for Plant Wide Components									
*Ignition Source Frequency: FIF = WFL*WFIS*FF*									
Compartment Fire Frequency: FL = SUM(FIF)									

Table 12A-57

F5205 - Fire Compartment Ignition Source Data Sheet (ISDS)

Compartment Description									
	Fire Area		Fire Area F5205						
	Fire Compartment		F5205	Electronic Equipment					
Compartment Fire Ignition Frequency									
Step 1.1	Plant Location ID		XX						
	Plant Location Description		Plant-Wide						
Step 1.2	Location Weighting Factor (WFL)		1.00E+00	Plant Location					
	Location Weighting Factor (WFL)		1.00E+00	Plant Wide Components					
Compartment Ignition Sources		Plant	App. to	Weighting	Sources in	Sources in	Weighting	Fire	**Ignition Source**
(FIF)		Location	This Area	Factor	Compartment	Plant Location	Factor	Frequency	**Frequency**
Bin #	Ignition Source	L	APP	WFL	(A)	(B)	WFIS=(A)/(B)	(FF)	**(FIF)**
01	Batteries	BR	1	1	0	21	0.000	7.50E-04	**0.00E+00**
02	Reactor Coolant Pump	COP	0	1	0	0	0.000	6.10E-03	**0.00E+00**
03	Transients and Hotwork	COP	0	1	0	0	0.000	2.00E-03	**0.00E+00**
04	Main Control Board	CR	0	1	0	0	0.000	2.50E-03	**0.00E+00**
05	Cable Fires caused by welding and cutting (Cntrl/Aux/Rx Building)	CAR	0	1	0	1166	0.000	1.60E-03	**0.00E+00**
06	Transient fires caused by welding and cutting (Cntrl/Aux/Rx Building)	CAR	0	1	0	53	0.000	9.70E-03	**0.00E+00**
07	Transients (Cntrl/Aux/Rx Building)	CAR	0	1	0	53	0.000	3.90E-03	**0.00E+00**
08	Diesel Generators	DGR	1	1	0	4	0.000	2.10E-02	**0.00E+00**
09	Air Compressors	XX	1	1	0	4	0.000	2.40E-03	**0.00E+00**
10	Battery Chargers	XX	1	1	0	15	0.000	1.80E-03	**0.00E+00**
11	Cable Fires caused by welding and cutting (Plant-Wide)	XX	1	1	9	430	0.021	2.00E-03	**4.19E-05**
12	Cable Run	XX	1	1	9	1820	0.005	4.40E-03	**2.18E-05**
13	Dryers	XX	1	1	0	2	0.000	2.60E-03	**0.00E+00**
14	Electric Motors	XX	1	1	0	8	0.000	4.60E-03	**0.00E+00**
15	Electrical Cabinets	XX	1	1	0	530	0.000	4.50E-02	**0.00E+00**
16	High Energy Arcing Faults	XX	1	1	0	77	0.000	1.50E-03	**0.00E+00**
17	Hydrogen Tanks	XX	1	1	0	2	0.000	1.70E-03	**0.00E+00**
18	Junction Boxes	XX	1	1	9	1820	0.005	1.90E-03	**9.40E-06**
19	Misc. Hydrogen Fires	XX	1	1	0	0	0.000	2.50E-03	**0.00E+00**
20	Off-gas/H2 Recombiner (BWR)	XX	1	1	0	2	0.000	4.40E-02	**0.00E+00**
21	Pumps	XX	1	1	0	43	0.000	2.10E-02	**0.00E+00**
22	RPS MG Sets	XX	0	1	0	0	0.000	1.60E-03	**0.00E+00**
23a	Transformers (oil filled)	XX	1	1	0	0	0.000	9.90E-03	**0.00E+00**
23b	Transformers (dry)	XX	1	1	0	67	0.000	9.90E-03	**0.00E+00**
24	Transient fires caused by welding and cutting (Plant-Wide)	XX	1	1	1	78	0.013	4.90E-03	**6.28E-05**
25	Transients (Plant-Wide)	XX	1	1	1	78	0.013	9.90E-03	**1.27E-04**
26	Ventilation Subsystems	XX	1	1	0	26	0.000	7.40E-03	**0.00E+00**
27	Transformer - Catastrophic	TY	0	1	0	9	0.000	6.00E-03	**0.00E+00**
28	Transformer - Non Catastrophic	TY	0	1	0	8	0.000	1.20E-02	**0.00E+00**
29	Yard Transformers (others)	TY	0	1	0	1	0.000	2.20E-03	**0.00E+00**
30	Boiler	TB	0	1	0	2	0.000	1.10E-03	**0.00E+00**
31	Cable Fires caused by welding and cutting (Turbine Building)	TB	0	1	0	224	0.000	1.60E-03	**0.00E+00**
32	Main Feedwater Pumps	TB	1	1	0	8	0.000	1.30E-02	**0.00E+00**
33	Turbine Generator Excitor	TB	0	1	0	1	0.000	3.90E-03	**0.00E+00**
34	Turbine Generator Hydrogen	TB	0	1	0	1	0.000	6.50E-03	**0.00E+00**
35	Turbine Generator Oil	TB	0	1	0	1	0.000	9.50E-03	**0.00E+00**
36	Transient fires caused by welding and cutting (Turbine Building)	TB	0	1	0	17	0.000	8.20E-03	**0.00E+00**
37	Transients (Turbine Building)	TB	0	1	0	17	0.000	8.50E-03	**0.00E+00**
Compartment Fire Frequency (FL)			**2.63E-04**						
Notes:									
(A) Number of Ignition Sources in Compartment									
(B) Total Number of Ignition Sources in Selected Plant Location or in Plant for Plant Wide Components									
*Ignition Source Frequency: FIF = WFL*WFIS*FF*									
Compartment Fire Frequency: FL = SUM(FIF)									

Table 12A-58

F5250 - Fire Compartment Ignition Source Data Sheet (ISDS)

Compartment Description									
	Fire Area		Fire Area F5250						
	Fire Compartment		F5250	Day Tank A					
Compartment Fire Ignition Frequency									
Step 1.1	Plant Location ID		XX						
	Plant Location Description		Plant-Wide						
Step 1.2	Location Weighting Factor (WFL)		1.00E+00	Plant Location					
	Location Weighting Factor (WFL)		1.00E+00	Plant Wide Components					
Compartment Ignition Sources		Plant	App. to	Weighting	Sources in	Sources in	Weighting	Fire	**Ignition Source**
(FIF)		Location	This Area	Factor	Compartment	Plant Location	Factor	Frequency	**Frequency**
Bin #	Ignition Source	L	APP	WFL	(A)	(B)	WFIS=(A)/(B)	(FF)	**(FIF)**
01	Batteries	BR	1	1	0	21	0.000	7.50E-04	**0.00E+00**
02	Reactor Coolant Pump	COP	0	1	0	0	0.000	6.10E-03	**0.00E+00**
03	Transients and Hotwork	COP	0	1	0	0	0.000	2.00E-03	**0.00E+00**
04	Main Control Board	CR	0	1	0	0	0.000	2.50E-03	**0.00E+00**
05	Cable Fires caused by welding and cutting (Cntrl/Aux/Rx Building)	CAR	0	1	0	1166	0.000	1.60E-03	**0.00E+00**
06	Transient fires caused by welding and cutting (Cntrl/Aux/Rx Building)	CAR	0	1	0	53	0.000	9.70E-03	**0.00E+00**
07	Transients (Cntrl/Aux/Rx Building)	CAR	0	1	0	53	0.000	3.90E-03	**0.00E+00**
08	Diesel Generators	DGR	1	1	0	4	0.000	2.10E-02	**0.00E+00**
09	Air Compressors	XX	1	1	0	4	0.000	2.40E-03	**0.00E+00**
10	Battery Chargers	XX	1	1	0	15	0.000	1.80E-03	**0.00E+00**
11	Cable Fires caused by welding and cutting (Plant-Wide)	XX	1	1	0	430	0.000	2.00E-03	**0.00E+00**
12	Cable Run	XX	1	1	0	1820	0.000	4.40E-03	**0.00E+00**
13	Dryers	XX	1	1	0	2	0.000	2.60E-03	**0.00E+00**
14	Electric Motors	XX	1	1	0	8	0.000	4.60E-03	**0.00E+00**
15	Electrical Cabinets	XX	1	1	0	530	0.000	4.50E-02	**0.00E+00**
16	High Energy Arcing Faults	XX	1	1	0	77	0.000	1.50E-03	**0.00E+00**
17	Hydrogen Tanks	XX	1	1	0	2	0.000	1.70E-03	**0.00E+00**
18	Junction Boxes	XX	1	1	0	1820	0.000	1.90E-03	**0.00E+00**
19	Misc. Hydrogen Fires	XX	1	1	0	0	0.000	2.50E-03	**0.00E+00**
20	Off-gas/H2 Recombiner (BWR)	XX	1	1	0	2	0.000	4.40E-02	**0.00E+00**
21	Pumps	XX	1	1	0	43	0.000	2.10E-02	**0.00E+00**
22	RPS MG Sets	XX	0	1	0	0	0.000	1.60E-03	**0.00E+00**
23a	Transformers (oil filled)	XX	1	1	0	0	0.000	9.90E-03	**0.00E+00**
23b	Transformers (dry)	XX	1	1	0	67	0.000	9.90E-03	**0.00E+00**
24	Transient fires caused by welding and cutting (Plant-Wide)	XX	1	1	1	78	0.013	4.90E-03	**6.28E-05**
25	Transients (Plant-Wide)	XX	1	1	1	78	0.013	9.90E-03	**1.27E-04**
26	Ventilation Subsystems	XX	1	1	0	26	0.000	7.40E-03	**0.00E+00**
27	Transformer - Catastrophic	TY	0	1	0	9	0.000	6.00E-03	**0.00E+00**
28	Transformer - Non Catastrophic	TY	0	1	0	8	0.000	1.20E-02	**0.00E+00**
29	Yard Transformers (others)	TY	0	1	0	1	0.000	2.20E-03	**0.00E+00**
30	Boiler	TB	0	1	0	2	0.000	1.10E-03	**0.00E+00**
31	Cable Fires caused by welding and cutting (Turbine Building)	TB	0	1	0	224	0.000	1.60E-03	**0.00E+00**
32	Main Feedwater Pumps	TB	1	1	0	8	0.000	1.30E-02	**0.00E+00**
33	Turbine Generator Excitor	TB	0	1	0	1	0.000	3.90E-03	**0.00E+00**
34	Turbine Generator Hydrogen	TB	0	1	0	1	0.000	6.50E-03	**0.00E+00**
35	Turbine Generator Oil	TB	0	1	0	1	0.000	9.50E-03	**0.00E+00**
36	Transient fires caused by welding and cutting (Turbine Building)	TB	0	1	0	17	0.000	8.20E-03	**0.00E+00**
37	Transients (Turbine Building)	TB	0	1	0	17	0.000	8.50E-03	**0.00E+00**
Compartment Fire Frequency (FL)			**1.90E-04**						
Notes:									
(A) Number of Ignition Sources in Compartment									
(B) Total Number of Ignition Sources in Selected Plant Location or in Plant for Plant Wide Components									
*Ignition Source Frequency: FIF = WFL*WFIS*FF*									
Compartment Fire Frequency: FL = SUM(FIF)									

Table 12A-59

F5251 - Fire Compartment Ignition Source Data Sheet (ISDS)

Compartment Description									
	Fire Area		Fire Area F5251						
	Fire Compartment		F5251	Diesel Generator Electrical & Control Equipment Room A					
Compartment Fire Ignition Frequency									
Step 1.1	Plant Location ID		DGR						
	Plant Location Description		Diesel Generator Rooms						
Step 1.2	Location Weighting Factor (WFL)		1.00E+00	Plant Location					
	Location Weighting Factor (WFL)		1.00E+00	Plant Wide Components					
Compartment Ignition Sources (FIF)		Plant Location	App. to This Area	Weighting Factor	Sources in Compartment	Sources in Plant Location	Weighting Factor	Fire Frequency	**Ignition Source Frequency**
Bin #	Ignition Source	L	APP	WFL	(A)	(B)	WFIS=(A)/(B)	(FF)	**(FIF)**
01	Batteries	BR	1	1	0	21	0.000	7.50E-04	**0.00E+00**
02	Reactor Coolant Pump	COP	0	1	0	0	0.000	6.10E-03	**0.00E+00**
03	Transients and Hotwork	COP	0	1	0	0	0.000	2.00E-03	**0.00E+00**
04	Main Control Board	CR	0	1	0	0	0.000	2.50E-03	**0.00E+00**
05	Cable Fires caused by welding and cutting (Cntrl/Aux/Rx Building)	CAR	0	1	0	1166	0.000	1.60E-03	**0.00E+00**
06	Transient fires caused by welding and cutting (Cntrl/Aux/Rx Building)	CAR	0	1	0	53	0.000	9.70E-03	**0.00E+00**
07	Transients (Cntrl/Aux/Rx Building)	CAR	0	1	0	53	0.000	3.90E-03	**0.00E+00**
08	Diesel Generators	DGR	1	1	0	4	0.000	2.10E-02	**0.00E+00**
09	Air Compressors	XX	1	1	0	4	0.000	2.40E-03	**0.00E+00**
10	Battery Chargers	XX	1	1	0	15	0.000	1.80E-03	**0.00E+00**
11	Cable Fires caused by welding and cutting (Plant-Wide)	XX	1	1	0	430	0.000	2.00E-03	**0.00E+00**
12	Cable Run	XX	1	1	0	1820	0.000	4.40E-03	**0.00E+00**
13	Dryers	XX	1	1	0	2	0.000	2.60E-03	**0.00E+00**
14	Electric Motors	XX	1	1	0	8	0.000	4.60E-03	**0.00E+00**
15	Electrical Cabinets	XX	1	1	1	530	0.002	4.50E-02	**8.49E-05**
16	High Energy Arcing Faults	XX	1	1	0	77	0.000	1.50E-03	**0.00E+00**
17	Hydrogen Tanks	XX	1	1	0	2	0.000	1.70E-03	**0.00E+00**
18	Junction Boxes	XX	1	1	0	1820	0.000	1.90E-03	**0.00E+00**
19	Misc. Hydrogen Fires	XX	1	1	0	0	0.000	2.50E-03	**0.00E+00**
20	Off-gas/H2 Recombiner (BWR)	XX	1	1	0	2	0.000	4.40E-02	**0.00E+00**
21	Pumps	XX	1	1	0	43	0.000	2.10E-02	**0.00E+00**
22	RPS MG Sets	XX	0	1	0	0	0.000	1.60E-03	**0.00E+00**
23a	Transformers (oil filled)	XX	1	1	0	0	0.000	9.90E-03	**0.00E+00**
23b	Transformers (dry)	XX	1	1	0	67	0.000	9.90E-03	**0.00E+00**
24	Transient fires caused by welding and cutting (Plant-Wide)	XX	1	1	1	78	0.013	4.90E-03	**6.28E-05**
25	Transients (Plant-Wide)	XX	1	1	1	78	0.013	9.90E-03	**1.27E-04**
26	Ventilation Subsystems	XX	1	1	0	26	0.000	7.40E-03	**0.00E+00**
27	Transformer - Catastrophic	TY	0	1	0	9	0.000	6.00E-03	**0.00E+00**
28	Transformer - Non Catastrophic	TY	0	1	0	8	0.000	1.20E-02	**0.00E+00**
29	Yard Transformers (others)	TY	0	1	0	1	0.000	2.20E-03	**0.00E+00**
30	Boiler	TB	0	1	0	2	0.000	1.10E-03	**0.00E+00**
31	Cable Fires caused by welding and cutting (Turbine Building)	TB	0	1	0	224	0.000	1.60E-03	**0.00E+00**
32	Main Feedwater Pumps	TB	1	1	0	8	0.000	1.30E-02	**0.00E+00**
33	Turbine Generator Excitor	TB	0	1	0	1	0.000	3.90E-03	**0.00E+00**
34	Turbine Generator Hydrogen	TB	0	1	0	1	0.000	6.50E-03	**0.00E+00**
35	Turbine Generator Oil	TB	0	1	0	1	0.000	9.50E-03	**0.00E+00**
36	Transient fires caused by welding and cutting (Turbine Building)	TB	0	1	0	17	0.000	8.20E-03	**0.00E+00**
37	Transients (Turbine Building)	TB	0	1	0	17	0.000	8.50E-03	**0.00E+00**
Compartment Fire Frequency (FL)			**2.75E-04**						
Notes:									
(A) Number of Ignition Sources in Compartment									
(B) Total Number of Ignition Sources in Selected Plant Location or in Plant for Plant Wide Components									
*Ignition Source Frequency: FIF = WFL*WFIS*FF*									
Compartment Fire Frequency: FL = SUM(FIF)									

Table 12A-60

F5260 - Fire Compartment Ignition Source Data Sheet (ISDS)

Compartment Description									
	Fire Area		Fire Area F5260						
	Fire Compartment		F5260	Day Tank B					
Compartment Fire Ignition Frequency									
Step 1.1	Plant Location ID		DGR						
	Plant Location Description		Diesel Generator Rooms						
Step 1.2	Location Weighting Factor (WFL)		1.00E+00	Plant Location					
	Location Weighting Factor (WFL)		1.00E+00	Plant Wide Components					
Compartment Ignition Sources		Plant	App. to	Weighting	Sources in	Sources in	Weighting	Fire	**Ignition Source**
(FIF)		Location	This Area	Factor	Compartment	Plant Location	Factor	Frequency	**Frequency**
Bin #	Ignition Source	L	APP	WFL	(A)	(B)	WFIS=(A)/(B)	(FF)	**(FIF)**
01	Batteries	BR	1	1	0	21	0.000	7.50E-04	**0.00E+00**
02	Reactor Coolant Pump	COP	0	1	0	0	0.000	6.10E-03	**0.00E+00**
03	Transients and Hotwork	COP	0	1	0	0	0.000	2.00E-03	**0.00E+00**
04	Main Control Board	CR	0	1	0	0	0.000	2.50E-03	**0.00E+00**
05	Cable Fires caused by welding and cutting (Cntrl/Aux/Rx Building)	CAR	0	1	0	1166	0.000	1.60E-03	**0.00E+00**
06	Transient fires caused by welding and cutting (Cntrl/Aux/Rx Building)	CAR	0	1	0	53	0.000	9.70E-03	**0.00E+00**
07	Transients (Cntrl/Aux/Rx Building)	CAR	0	1	0	53	0.000	3.90E-03	**0.00E+00**
08	Diesel Generators	DGR	1	1	0	4	0.000	2.10E-02	**0.00E+00**
09	Air Compressors	XX	1	1	0	4	0.000	2.40E-03	**0.00E+00**
10	Battery Chargers	XX	1	1	0	15	0.000	1.80E-03	**0.00E+00**
11	Cable Fires caused by welding and cutting (Plant-Wide)	XX	1	1	0	430	0.000	2.00E-03	**0.00E+00**
12	Cable Run	XX	1	1	0	1820	0.000	4.40E-03	**0.00E+00**
13	Dryers	XX	1	1	0	2	0.000	2.60E-03	**0.00E+00**
14	Electric Motors	XX	1	1	0	8	0.000	4.60E-03	**0.00E+00**
15	Electrical Cabinets	XX	1	1	0	530	0.000	4.50E-02	**0.00E+00**
16	High Energy Arcing Faults	XX	1	1	0	77	0.000	1.50E-03	**0.00E+00**
17	Hydrogen Tanks	XX	1	1	0	2	0.000	1.70E-03	**0.00E+00**
18	Junction Boxes	XX	1	1	0	1820	0.000	1.90E-03	**0.00E+00**
19	Misc. Hydrogen Fires	XX	1	1	0	0	0.000	2.50E-03	**0.00E+00**
20	Off-gas/H2 Recombiner (BWR)	XX	1	1	0	2	0.000	4.40E-02	**0.00E+00**
21	Pumps	XX	1	1	0	43	0.000	2.10E-02	**0.00E+00**
22	RPS MG Sets	XX	0	1	0	0	0.000	1.60E-03	**0.00E+00**
23a	Transformers (oil filled)	XX	1	1	0	0	0.000	9.90E-03	**0.00E+00**
23b	Transformers (dry)	XX	1	1	0	67	0.000	9.90E-03	**0.00E+00**
24	Transient fires caused by welding and cutting (Plant-Wide)	XX	1	1	1	78	0.013	4.90E-03	**6.28E-05**
25	Transients (Plant-Wide)	XX	1	1	1	78	0.013	9.90E-03	**1.27E-04**
26	Ventilation Subsystems	XX	1	1	0	26	0.000	7.40E-03	**0.00E+00**
27	Transformer - Catastrophic	TY	0	1	0	9	0.000	6.00E-03	**0.00E+00**
28	Transformer - Non Catastrophic	TY	0	1	0	8	0.000	1.20E-02	**0.00E+00**
29	Yard Transformers (others)	TY	0	1	0	1	0.000	2.20E-03	**0.00E+00**
30	Boiler	TB	0	1	0	2	0.000	1.10E-03	**0.00E+00**
31	Cable Fires caused by welding and cutting (Turbine Building)	TB	0	1	0	224	0.000	1.60E-03	**0.00E+00**
32	Main Feedwater Pumps	TB	1	1	0	8	0.000	1.30E-02	**0.00E+00**
33	Turbine Generator Excitor	TB	0	1	0	1	0.000	3.90E-03	**0.00E+00**
34	Turbine Generator Hydrogen	TB	0	1	0	1	0.000	6.50E-03	**0.00E+00**
35	Turbine Generator Oil	TB	0	1	0	1	0.000	9.50E-03	**0.00E+00**
36	Transient fires caused by welding and cutting (Turbine Building)	TB	0	1	0	17	0.000	8.20E-03	**0.00E+00**
37	Transients (Turbine Building)	TB	0	1	0	17	0.000	8.50E-03	**0.00E+00**
Compartment Fire Frequency (FL)			**1.90E-04**						
Notes:									
(A) Number of Ignition Sources in Compartment									
(B) Total Number of Ignition Sources in Selected Plant Location or in Plant for Plant Wide Components									
*Ignition Source Frequency: FIF = WFL*WFIS*FF*									
Compartment Fire Frequency: FL = SUM(FIF)									

Table 12A-61

F5261 - Fire Compartment Ignition Source Data Sheet (ISDS)

Compartment Description									
	Fire Area		Fire Area F5261						
	Fire Compartment		F5261	Diesel Generator Electrical & Control Equipment Room B					
Compartment Fire Ignition Frequency									
Step 1.1	Plant Location ID		DGR						
	Plant Location Description		Diesel Generator Rooms						
Step 1.2	Location Weighting Factor (WFL)		1.00E+00	Plant Location					
	Location Weighting Factor (WFL)		1.00E+00	Plant Wide Components					
Compartment Ignition Sources		Plant	App. to	Weighting	Sources in	Sources in	Weighting	Fire	**Ignition Source**
(FIF)		Location	This Area	Factor	Compartment	Plant Location	Factor	Frequency	**Frequency**
Bin #	Ignition Source	L	APP	WFL	(A)	(B)	WFIS=(A)/(B)	(FF)	**(FIF)**
01	Batteries	BR	1	1	0	21	0.000	7.50E-04	**0.00E+00**
02	Reactor Coolant Pump	COP	0	1	0	0	0.000	6.10E-03	**0.00E+00**
03	Transients and Hotwork	COP	0	1	0	0	0.000	2.00E-03	**0.00E+00**
04	Main Control Board	CR	0	1	0	0	0.000	2.50E-03	**0.00E+00**
05	Cable Fires caused by welding and cutting (Cntrl/Aux/Rx Building)	CAR	0	1	0	1166	0.000	1.60E-03	**0.00E+00**
06	Transient fires caused by welding and cutting (Cntrl/Aux/Rx Building)	CAR	0	1	0	53	0.000	9.70E-03	**0.00E+00**
07	Transients (Cntrl/Aux/Rx Building)	CAR	0	1	0	53	0.000	3.90E-03	**0.00E+00**
08	Diesel Generators	DGR	1	1	0	4	0.000	2.10E-02	**0.00E+00**
09	Air Compressors	XX	1	1	0	4	0.000	2.40E-03	**0.00E+00**
10	Battery Chargers	XX	1	1	0	15	0.000	1.80E-03	**0.00E+00**
11	Cable Fires caused by welding and cutting (Plant-Wide)	XX	1	1	0	430	0.000	2.00E-03	**0.00E+00**
12	Cable Run	XX	1	1	0	1820	0.000	4.40E-03	**0.00E+00**
13	Dryers	XX	1	1	0	2	0.000	2.60E-03	**0.00E+00**
14	Electric Motors	XX	1	1	0	8	0.000	4.60E-03	**0.00E+00**
15	Electrical Cabinets	XX	1	1	1	530	0.002	4.50E-02	**8.49E-05**
16	High Energy Arcing Faults	XX	1	1	0	77	0.000	1.50E-03	**0.00E+00**
17	Hydrogen Tanks	XX	1	1	0	2	0.000	1.70E-03	**0.00E+00**
18	Junction Boxes	XX	1	1	0	1820	0.000	1.90E-03	**0.00E+00**
19	Misc. Hydrogen Fires	XX	1	1	0	0	0.000	2.50E-03	**0.00E+00**
20	Off-gas/H2 Recombiner (BWR)	XX	1	1	0	2	0.000	4.40E-02	**0.00E+00**
21	Pumps	XX	1	1	0	43	0.000	2.10E-02	**0.00E+00**
22	RPS MG Sets	XX	0	1	0	0	0.000	1.60E-03	**0.00E+00**
23a	Transformers (oil filled)	XX	1	1	0	0	0.000	9.90E-03	**0.00E+00**
23b	Transformers (dry)	XX	1	1	0	67	0.000	9.90E-03	**0.00E+00**
24	Transient fires caused by welding and cutting (Plant-Wide)	XX	1	1	1	78	0.013	4.90E-03	**6.28E-05**
25	Transients (Plant-Wide)	XX	1	1	1	78	0.013	9.90E-03	**1.27E-04**
26	Ventilation Subsystems	XX	1	1	0	26	0.000	7.40E-03	**0.00E+00**
27	Transformer - Catastrophic	TY	0	1	0	9	0.000	6.00E-03	**0.00E+00**
28	Transformer - Non Catastrophic	TY	0	1	0	8	0.000	1.20E-02	**0.00E+00**
29	Yard Transformers (others)	TY	0	1	0	1	0.000	2.20E-03	**0.00E+00**
30	Boiler	TB	0	1	0	2	0.000	1.10E-03	**0.00E+00**
31	Cable Fires caused by welding and cutting (Turbine Building)	TB	0	1	0	224	0.000	1.60E-03	**0.00E+00**
32	Main Feedwater Pumps	TB	1	1	0	8	0.000	1.30E-02	**0.00E+00**
33	Turbine Generator Excitor	TB	0	1	0	1	0.000	3.90E-03	**0.00E+00**
34	Turbine Generator Hydrogen	TB	0	1	0	1	0.000	6.50E-03	**0.00E+00**
35	Turbine Generator Oil	TB	0	1	0	1	0.000	9.50E-03	**0.00E+00**
36	Transient fires caused by welding and cutting (Turbine Building)	TB	0	1	0	17	0.000	8.20E-03	**0.00E+00**
37	Transients (Turbine Building)	TB	0	1	0	17	0.000	8.50E-03	**0.00E+00**
Compartment Fire Frequency (FL)			**2.75E-04**						
Notes:									
(A) Number of Ignition Sources in Compartment									
(B) Total Number of Ignition Sources in Selected Plant Location or in Plant for Plant Wide Components									
*Ignition Source Frequency: FIF = WFL*WFIS*FF*									
Compartment Fire Frequency: FL = SUM(FIF)									

Table 12A-62

F5350 - Fire Compartment Ignition Source Data Sheet (ISDS)

Compartment Description									
	Fire Area		Fire Area F5350						
	Fire Compartment		F5350	Electrical Equipment A					
Compartment Fire Ignition Frequency									
Step 1.1	Plant Location ID		XX						
	Plant Location Description		Plant-Wide						
Step 1.2	Location Weighting Factor (WFL)		1.00E+00	Plant Location					
	Location Weighting Factor (WFL)		1.00E+00	Plant Wide Components					
Compartment Ignition Sources		Plant	App. to	Weighting	Sources in	Sources in	Weighting	Fire	**Ignition Source**
(FIF)		Location	This Area	Factor	Compartment	Plant Location	Factor	Frequency	**Frequency**
Bin #	Ignition Source	L	APP	WFL	(A)	(B)	WFIS=(A)/(B)	(FF)	**(FIF)**
01	Batteries	BR	1	1	0	21	0.000	7.50E-04	**0.00E+00**
02	Reactor Coolant Pump	COP	0	1	0	0	0.000	6.10E-03	**0.00E+00**
03	Transients and Hotwork	COP	0	1	0	0	0.000	2.00E-03	**0.00E+00**
04	Main Control Board	CR	0	1	0	0	0.000	2.50E-03	**0.00E+00**
05	Cable Fires caused by welding and cutting (Cntrl/Aux/Rx Building)	CAR	0	1	0	1166	0.000	1.60E-03	**0.00E+00**
06	Transient fires caused by welding and cutting (Cntrl/Aux/Rx Building)	CAR	0	1	0	53	0.000	9.70E-03	**0.00E+00**
07	Transients (Cntrl/Aux/Rx Building)	CAR	0	1	0	53	0.000	3.90E-03	**0.00E+00**
08	Diesel Generators	DGR	1	1	0	4	0.000	2.10E-02	**0.00E+00**
09	Air Compressors	XX	1	1	0	4	0.000	2.40E-03	**0.00E+00**
10	Battery Chargers	XX	1	1	3	15	0.200	1.80E-03	**3.60E-04**
11	Cable Fires caused by welding and cutting (Plant-Wide)	XX	1	1	41	430	0.095	2.00E-03	**1.91E-04**
12	Cable Run	XX	1	1	41	1820	0.023	4.40E-03	**9.91E-05**
13	Dryers	XX	1	1	0	2	0.000	2.60E-03	**0.00E+00**
14	Electric Motors	XX	1	1	0	8	0.000	4.60E-03	**0.00E+00**
15	Electrical Cabinets	XX	1	1	48	530	0.091	4.50E-02	**4.08E-03**
16	High Energy Arcing Faults	XX	1	1	10	77	0.130	1.50E-03	**1.95E-04**
17	Hydrogen Tanks	XX	1	1	0	2	0.000	1.70E-03	**0.00E+00**
18	Junction Boxes	XX	1	1	41	1820	0.023	1.90E-03	**4.28E-05**
19	Misc. Hydrogen Fires	XX	1	1	0	0	0.000	2.50E-03	**0.00E+00**
20	Off-gas/H2 Recombiner (BWR)	XX	1	1	0	2	0.000	4.40E-02	**0.00E+00**
21	Pumps	XX	1	1	0	43	0.000	2.10E-02	**0.00E+00**
22	RPS MG Sets	XX	0	1	0	0	0.000	1.60E-03	**0.00E+00**
23a	Transformers (oil filled)	XX	1	1	0	0	0.000	9.90E-03	**0.00E+00**
23b	Transformers (dry)	XX	1	1	10	67	0.149	9.90E-03	**1.48E-03**
24	Transient fires caused by welding and cutting (Plant-Wide)	XX	1	1	1	78	0.013	4.90E-03	**6.28E-05**
25	Transients (Plant-Wide)	XX	1	1	1	78	0.013	9.90E-03	**1.27E-04**
26	Ventilation Subsystems	XX	1	1	0	26	0.000	7.40E-03	**0.00E+00**
27	Transformer - Catastrophic	TY	0	1	0	9	0.000	6.00E-03	**0.00E+00**
28	Transformer - Non Catastrophic	TY	0	1	0	8	0.000	1.20E-02	**0.00E+00**
29	Yard Transformers (others)	TY	0	1	0	1	0.000	2.20E-03	**0.00E+00**
30	Boiler	TB	0	1	0	2	0.000	1.10E-03	**0.00E+00**
31	Cable Fires caused by welding and cutting (Turbine Building)	TB	0	1	0	224	0.000	1.60E-03	**0.00E+00**
32	Main Feedwater Pumps	TB	1	1	0	8	0.000	1.30E-02	**0.00E+00**
33	Turbine Generator Excitor	TB	0	1	0	1	0.000	3.90E-03	**0.00E+00**
34	Turbine Generator Hydrogen	TB	0	1	0	1	0.000	6.50E-03	**0.00E+00**
35	Turbine Generator Oil	TB	0	1	0	1	0.000	9.50E-03	**0.00E+00**
36	Transient fires caused by welding and cutting (Turbine Building)	TB	0	1	0	17	0.000	8.20E-03	**0.00E+00**
37	Transients (Turbine Building)	TB	0	1	0	17	0.000	8.50E-03	**0.00E+00**
Compartment Fire Frequency (FL)			**6.63E-03**						
Notes:									
(A) Number of Ignition Sources in Compartment									
(B) Total Number of Ignition Sources in Selected Plant Location or in Plant for Plant Wide Components									
*Ignition Source Frequency: FIF = WFL*WFIS*FF*									
Compartment Fire Frequency: FL = SUM(FIF)									

Table 12A-63

F5360 - Fire Compartment Ignition Source Data Sheet (ISDS)

Compartment Description									
	Fire Area		Fire Area F5360						
	Fire Compartment		F5360	Electrical Equipment B					
Compartment Fire Ignition Frequency									
Step 1.1	Plant Location ID		XX						
	Plant Location Description		Plant-Wide						
Step 1.2	Location Weighting Factor (WFL)		1.00E+00	Plant Location					
	Location Weighting Factor (WFL)		1.00E+00	Plant Wide Components					
Compartment Ignition Sources		Plant	App. to	Weighting	Sources in	Sources in	Weighting	Fire	**Ignition Source**
(FIF)		Location	This Area	Factor	Compartment	Plant Location	Factor	Frequency	**Frequency**
Bin #	Ignition Source	L	APP	WFL	(A)	(B)	WFIS=(A)/(B)	(FF)	**(FIF)**
01	Batteries	BR	1	1	0	21	0.000	7.50E-04	**0.00E+00**
02	Reactor Coolant Pump	COP	0	1	0	0	0.000	6.10E-03	**0.00E+00**
03	Transients and Hotwork	COP	0	1	0	0	0.000	2.00E-03	**0.00E+00**
04	Main Control Board	CR	0	1	0	0	0.000	2.50E-03	**0.00E+00**
05	Cable Fires caused by welding and cutting (Cntrl/Aux/Rx Building)	CAR	0	1	0	1166	0.000	1.60E-03	**0.00E+00**
06	Transient fires caused by welding and cutting (Cntrl/Aux/Rx Building)	CAR	0	1	0	53	0.000	9.70E-03	**0.00E+00**
07	Transients (Cntrl/Aux/Rx Building)	CAR	0	1	0	53	0.000	3.90E-03	**0.00E+00**
08	Diesel Generators	DGR	1	1	0	4	0.000	2.10E-02	**0.00E+00**
09	Air Compressors	XX	1	1	0	4	0.000	2.40E-03	**0.00E+00**
10	Battery Chargers	XX	1	1	3	15	0.200	1.80E-03	**3.60E-04**
11	Cable Fires caused by welding and cutting (Plant-Wide)	XX	1	1	40	430	0.093	2.00E-03	**1.86E-04**
12	Cable Run	XX	1	1	40	1820	0.022	4.40E-03	**9.67E-05**
13	Dryers	XX	1	1	0	2	0.000	2.60E-03	**0.00E+00**
14	Electric Motors	XX	1	1	0	8	0.000	4.60E-03	**0.00E+00**
15	Electrical Cabinets	XX	1	1	47	530	0.089	4.50E-02	**3.99E-03**
16	High Energy Arcing Faults	XX	1	1	10	77	0.130	1.50E-03	**1.95E-04**
17	Hydrogen Tanks	XX	1	1	0	2	0.000	1.70E-03	**0.00E+00**
18	Junction Boxes	XX	1	1	40	1820	0.022	1.90E-03	**4.18E-05**
19	Misc. Hydrogen Fires	XX	1	1	0	0	0.000	2.50E-03	**0.00E+00**
20	Off-gas/H2 Recombiner (BWR)	XX	1	1	0	2	0.000	4.40E-02	**0.00E+00**
21	Pumps	XX	1	1	0	43	0.000	2.10E-02	**0.00E+00**
22	RPS MG Sets	XX	0	1	0	0	0.000	1.60E-03	**0.00E+00**
23a	Transformers (oil filled)	XX	1	1	0	0	0.000	9.90E-03	**0.00E+00**
23b	Transformers (dry)	XX	1	1	10	67	0.149	9.90E-03	**1.48E-03**
24	Transient fires caused by welding and cutting (Plant-Wide)	XX	1	1	1	78	0.013	4.90E-03	**6.28E-05**
25	Transients (Plant-Wide)	XX	1	1	1	78	0.013	9.90E-03	**1.27E-04**
26	Ventilation Subsystems	XX	1	1	0	26	0.000	7.40E-03	**0.00E+00**
27	Transformer - Catastrophic	TY	0	1	0	9	0.000	6.00E-03	**0.00E+00**
28	Transformer - Non Catastrophic	TY	0	1	0	8	0.000	1.20E-02	**0.00E+00**
29	Yard Transformers (others)	TY	0	1	0	1	0.000	2.20E-03	**0.00E+00**
30	Boiler	TB	0	1	0	2	0.000	1.10E-03	**0.00E+00**
31	Cable Fires caused by welding and cutting (Turbine Building)	TB	0	1	0	224	0.000	1.60E-03	**0.00E+00**
32	Main Feedwater Pumps	TB	1	1	0	8	0.000	1.30E-02	**0.00E+00**
33	Turbine Generator Excitor	TB	0	1	0	1	0.000	3.90E-03	**0.00E+00**
34	Turbine Generator Hydrogen	TB	0	1	0	1	0.000	6.50E-03	**0.00E+00**
35	Turbine Generator Oil	TB	0	1	0	1	0.000	9.50E-03	**0.00E+00**
36	Transient fires caused by welding and cutting (Turbine Building)	TB	0	1	0	17	0.000	8.20E-03	**0.00E+00**
37	Transients (Turbine Building)	TB	0	1	0	17	0.000	8.50E-03	**0.00E+00**
Compartment Fire Frequency (FL)			**6.54E-03**						
Notes:									
(A) Number of Ignition Sources in Compartment									
(B) Total Number of Ignition Sources in Selected Plant Location or in Plant for Plant Wide Components									
*Ignition Source Frequency: FIF = WFL*WFIS*FF*									
Compartment Fire Frequency: FL = SUM(FIF)									

Table 12A-64

F7100 - Fire Compartment Ignition Source Data Sheet (ISDS)

Compartment Description									
	Fire Area		Fire Area F7100						
	Fire Compartment		F7100	Pump House					
Compartment Fire Ignition Frequency									
Step 1.1	Plant Location ID		XX						
	Plant Location Description		Plant-Wide						
Step 1.2	Location Weighting Factor (WFL)		1.00E+00	Plant Location					
	Location Weighting Factor (WFL)		1.00E+00	Plant Wide Components					
Compartment Ignition Sources		Plant	App. to	Weighting	Sources in	Sources in	Weighting	Fire	**Ignition Source**
(FIF)		Location	This Area	Factor	Compartment	Plant Location	Factor	Frequency	**Frequency**
Bin #	Ignition Source	L	APP	WFL	(A)	(B)	WFIS=(A)/(B)	(FF)	**(FIF)**
01	Batteries	BR	1	1	0	21	0.000	7.50E-04	**0.00E+00**
02	Reactor Coolant Pump	COP	0	1	0	0	0.000	6.10E-03	**0.00E+00**
03	Transients and Hotwork	COP	0	1	0	0	0.000	2.00E-03	**0.00E+00**
04	Main Control Board	CR	0	1	0	0	0.000	2.50E-03	**0.00E+00**
05	Cable Fires caused by welding and cutting (Cntrl/Aux/Rx Building)	CAR	0	1	0	1166	0.000	1.60E-03	**0.00E+00**
06	Transient fires caused by welding and cutting (Cntrl/Aux/Rx Building)	CAR	0	1	0	53	0.000	9.70E-03	**0.00E+00**
07	Transients (Cntrl/Aux/Rx Building)	CAR	0	1	0	53	0.000	3.90E-03	**0.00E+00**
08	Diesel Generators	DGR	1	1	0	4	0.000	2.10E-02	**0.00E+00**
09	Air Compressors	XX	1	1	0	4	0.000	2.40E-03	**0.00E+00**
10	Battery Chargers	XX	1	1	0	15	0.000	1.80E-03	**0.00E+00**
11	Cable Fires caused by welding and cutting (Plant-Wide)	XX	1	1	6	430	0.014	2.00E-03	**2.79E-05**
12	Cable Run	XX	1	1	6	1820	0.003	4.40E-03	**1.45E-05**
13	Dryers	XX	1	1	0	2	0.000	2.60E-03	**0.00E+00**
14	Electric Motors	XX	1	1	4	8	0.500	4.60E-03	**2.30E-03**
15	Electrical Cabinets	XX	1	1	5	530	0.009	4.50E-02	**4.25E-04**
16	High Energy Arcing Faults	XX	1	1	1	77	0.013	1.50E-03	**1.95E-05**
17	Hydrogen Tanks	XX	1	1	0	2	0.000	1.70E-03	**0.00E+00**
18	Junction Boxes	XX	1	1	6	1820	0.003	1.90E-03	**6.26E-06**
19	Misc. Hydrogen Fires	XX	1	1	0	0	0.000	2.50E-03	**0.00E+00**
20	Off-gas/H2 Recombiner (BWR)	XX	1	1	0	2	0.000	4.40E-02	**0.00E+00**
21	Pumps	XX	1	1	4	43	0.093	2.10E-02	**1.95E-03**
22	RPS MG Sets	XX	0	1	0	0	0.000	1.60E-03	**0.00E+00**
23a	Transformers (oil filled)	XX	1	1	0	0	0.000	9.90E-03	**0.00E+00**
23b	Transformers (dry)	XX	1	1	1	67	0.015	9.90E-03	**1.48E-04**
24	Transient fires caused by welding and cutting (Plant-Wide)	XX	1	1	1	78	0.013	4.90E-03	**6.28E-05**
25	Transients (Plant-Wide)	XX	1	1	1	78	0.013	9.90E-03	**1.27E-04**
26	Ventilation Subsystems	XX	1	1	0	26	0.000	7.40E-03	**0.00E+00**
27	Transformer - Catastrophic	TY	0	1	0	9	0.000	6.00E-03	**0.00E+00**
28	Transformer - Non Catastrophic	TY	0	1	0	8	0.000	1.20E-02	**0.00E+00**
29	Yard Transformers (others)	TY	0	1	0	1	0.000	2.20E-03	**0.00E+00**
30	Boiler	TB	0	1	0	2	0.000	1.10E-03	**0.00E+00**
31	Cable Fires caused by welding and cutting (Turbine Building)	TB	0	1	0	224	0.000	1.60E-03	**0.00E+00**
32	Main Feedwater Pumps	TB	1	1	0	8	0.000	1.30E-02	**0.00E+00**
33	Turbine Generator Excitor	TB	0	1	0	1	0.000	3.90E-03	**0.00E+00**
34	Turbine Generator Hydrogen	TB	0	1	0	1	0.000	6.50E-03	**0.00E+00**
35	Turbine Generator Oil	TB	0	1	0	1	0.000	9.50E-03	**0.00E+00**
36	Transient fires caused by welding and cutting (Turbine Building)	TB	0	1	0	17	0.000	8.20E-03	**0.00E+00**
37	Transients (Turbine Building)	TB	0	1	0	17	0.000	8.50E-03	**0.00E+00**
Compartment Fire Frequency (FL)			**5.08E-03**						
Notes:									
(A) Number of Ignition Sources in Compartment									
(B) Total Number of Ignition Sources in Selected Plant Location or in Plant for Plant Wide Components									
*Ignition Source Frequency: FIF = WFL*WFIS*FF*									
Compartment Fire Frequency: FL = SUM(FIF)									

Table 12A-65

F7300A - Fire Compartment Ignition Source Data Sheet (ISDS)

Compartment Description									
	Fire Area		Fire Area F7300A						
	Fire Compartment		F7300A	Service Water / Water Treatment Building Train A					
Compartment Fire Ignition Frequency									
Step 1.1	Plant Location ID		XX						
	Plant Location Description		Plant-Wide						
Step 1.2	Location Weighting Factor (WFL)		1.00E+00	Plant Location					
	Location Weighting Factor (WFL)		1.00E+00	Plant Wide Components					
Compartment Ignition Sources		Plant	App. to	Weighting	Sources in	Sources in	Weighting	Fire	**Ignition Source**
(FIF)		Location	This Area	Factor	Compartment	Plant Location	Factor	Frequency	**Frequency**
Bin #	Ignition Source	L	APP	WFL	(A)	(B)	WFIS=(A)/(B)	(FF)	**(FIF)**
01	Batteries	BR	1	1	0	21	0.000	7.50E-04	**0.00E+00**
02	Reactor Coolant Pump	COP	0	1	0	0	0.000	6.10E-03	**0.00E+00**
03	Transients and Hotwork	COP	0	1	0	0	0.000	2.00E-03	**0.00E+00**
04	Main Control Board	CR	0	1	0	0	0.000	2.50E-03	**0.00E+00**
05	Cable Fires caused by welding and cutting (Cntrl/Aux/Rx Building)	CAR	0	1	0	1166	0.000	1.60E-03	**0.00E+00**
06	Transient fires caused by welding and cutting (Cntrl/Aux/Rx Building)	CAR	0	1	0	53	0.000	9.70E-03	**0.00E+00**
07	Transients (Cntrl/Aux/Rx Building)	CAR	0	1	0	53	0.000	3.90E-03	**0.00E+00**
08	Diesel Generators	DGR	1	1	0	4	0.000	2.10E-02	**0.00E+00**
09	Air Compressors	XX	1	1	0	4	0.000	2.40E-03	**0.00E+00**
10	Battery Chargers	XX	1	1	0	15	0.000	1.80E-03	**0.00E+00**
11	Cable Fires caused by welding and cutting (Plant-Wide)	XX	1	1	11	430	0.026	2.00E-03	**5.12E-05**
12	Cable Run	XX	1	1	11	1820	0.006	4.40E-03	**2.66E-05**
13	Dryers	XX	1	1	0	2	0.000	2.60E-03	**0.00E+00**
14	Electric Motors	XX	1	1	2	8	0.250	4.60E-03	**1.15E-03**
15	Electrical Cabinets	XX	1	1	5	530	0.009	4.50E-02	**4.25E-04**
16	High Energy Arcing Faults	XX	1	1	1	77	0.013	1.50E-03	**1.95E-05**
17	Hydrogen Tanks	XX	1	1	0	2	0.000	1.70E-03	**0.00E+00**
18	Junction Boxes	XX	1	1	11	1820	0.006	1.90E-03	**1.15E-05**
19	Misc. Hydrogen Fires	XX	1	1	0	0	0.000	2.50E-03	**0.00E+00**
20	Off-gas/H2 Recombiner (BWR)	XX	1	1	0	2	0.000	4.40E-02	**0.00E+00**
21	Pumps	XX	1	1	2	43	0.047	2.10E-02	**9.77E-04**
22	RPS MG Sets	XX	0	1	0	0	0.000	1.60E-03	**0.00E+00**
23a	Transformers (oil filled)	XX	1	1	0	0	0.000	9.90E-03	**0.00E+00**
23b	Transformers (dry)	XX	1	1	1	67	0.015	9.90E-03	**1.48E-04**
24	Transient fires caused by welding and cutting (Plant-Wide)	XX	1	1	1	78	0.013	4.90E-03	**6.28E-05**
25	Transients (Plant-Wide)	XX	1	1	1	78	0.013	9.90E-03	**1.27E-04**
26	Ventilation Subsystems	XX	1	1	2	26	0.077	7.40E-03	**5.69E-04**
27	Transformer - Catastrophic	TY	0	1	0	9	0.000	6.00E-03	**0.00E+00**
28	Transformer - Non Catastrophic	TY	0	1	0	8	0.000	1.20E-02	**0.00E+00**
29	Yard Transformers (others)	TY	0	1	0	1	0.000	2.20E-03	**0.00E+00**
30	Boiler	TB	0	1	0	2	0.000	1.10E-03	**0.00E+00**
31	Cable Fires caused by welding and cutting (Turbine Building)	TB	0	1	0	224	0.000	1.60E-03	**0.00E+00**
32	Main Feedwater Pumps	TB	1	1	0	8	0.000	1.30E-02	**0.00E+00**
33	Turbine Generator Excitor	TB	0	1	0	1	0.000	3.90E-03	**0.00E+00**
34	Turbine Generator Hydrogen	TB	0	1	0	1	0.000	6.50E-03	**0.00E+00**
35	Turbine Generator Oil	TB	0	1	0	1	0.000	9.50E-03	**0.00E+00**
36	Transient fires caused by welding and cutting (Turbine Building)	TB	0	1	0	17	0.000	8.20E-03	**0.00E+00**
37	Transients (Turbine Building)	TB	0	1	0	17	0.000	8.50E-03	**0.00E+00**
Compartment Fire Frequency (FL)			**3.57E-03**						
Notes:									
(A) Number of Ignition Sources in Compartment									
(B) Total Number of Ignition Sources in Selected Plant Location or in Plant for Plant Wide Components									
*Ignition Source Frequency: FIF = WFL*WFIS*FF*									
Compartment Fire Frequency: FL = SUM(FIF)									

Table 12A-66

F7300B - Fire Compartment Ignition Source Data Sheet (ISDS)

Compartment Description									
	Fire Area		Fire Area F7300B						
	Fire Compartment		F7300B	Service Water / Water Treatment Building Train B					
Compartment Fire Ignition Frequency									
Step 1.1	Plant Location ID		XX						
	Plant Location Description		Plant-Wide						
Step 1.2	Location Weighting Factor (WFL)		1.00E+00	Plant Location					
	Location Weighting Factor (WFL)		1.00E+00	Plant Wide Components					
Compartment Ignition Sources		Plant	App. to	Weighting	Sources in	Sources in	Weighting	Fire	**Ignition Source**
(FIF)		Location	This Area	Factor	Compartment	Plant Location	Factor	Frequency	**Frequency**
Bin #	Ignition Source	L	APP	WFL	(A)	(B)	WFIS=(A)/(B)	(FF)	**(FIF)**
01	Batteries	BR	1	1	0	21	0.000	7.50E-04	**0.00E+00**
02	Reactor Coolant Pump	COP	0	1	0	0	0.000	6.10E-03	**0.00E+00**
03	Transients and Hotwork	COP	0	1	0	0	0.000	2.00E-03	**0.00E+00**
04	Main Control Board	CR	0	1	0	0	0.000	2.50E-03	**0.00E+00**
05	Cable Fires caused by welding and cutting (Cntrl/Aux/Rx Building)	CAR	0	1	0	1166	0.000	1.60E-03	**0.00E+00**
06	Transient fires caused by welding and cutting (Cntrl/Aux/Rx Building)	CAR	0	1	0	53	0.000	9.70E-03	**0.00E+00**
07	Transients (Cntrl/Aux/Rx Building)	CAR	0	1	0	53	0.000	3.90E-03	**0.00E+00**
08	Diesel Generators	DGR	1	1	0	4	0.000	2.10E-02	**0.00E+00**
09	Air Compressors	XX	1	1	0	4	0.000	2.40E-03	**0.00E+00**
10	Battery Chargers	XX	1	1	0	15	0.000	1.80E-03	**0.00E+00**
11	Cable Fires caused by welding and cutting (Plant-Wide)	XX	1	1	11	430	0.026	2.00E-03	**5.12E-05**
12	Cable Run	XX	1	1	11	1820	0.006	4.40E-03	**2.66E-05**
13	Dryers	XX	1	1	0	2	0.000	2.60E-03	**0.00E+00**
14	Electric Motors	XX	1	1	2	8	0.250	4.60E-03	**1.15E-03**
15	Electrical Cabinets	XX	1	1	4	530	0.008	4.50E-02	**3.40E-04**
16	High Energy Arcing Faults	XX	1	1	1	77	0.013	1.50E-03	**1.95E-05**
17	Hydrogen Tanks	XX	1	1	0	2	0.000	1.70E-03	**0.00E+00**
18	Junction Boxes	XX	1	1	11	1820	0.006	1.90E-03	**1.15E-05**
19	Misc. Hydrogen Fires	XX	1	1	0	0	0.000	2.50E-03	**0.00E+00**
20	Off-gas/H2 Recombiner (BWR)	XX	1	1	0	2	0.000	4.40E-02	**0.00E+00**
21	Pumps	XX	1	1	2	43	0.047	2.10E-02	**9.77E-04**
22	RPS MG Sets	XX	0	1	0	0	0.000	1.60E-03	**0.00E+00**
23a	Transformers (oil filled)	XX	1	1	0	0	0.000	9.90E-03	**0.00E+00**
23b	Transformers (dry)	XX	1	1	1	67	0.015	9.90E-03	**1.48E-04**
24	Transient fires caused by welding and cutting (Plant-Wide)	XX	1	1	1	78	0.013	4.90E-03	**6.28E-05**
25	Transients (Plant-Wide)	XX	1	1	1	78	0.013	9.90E-03	**1.27E-04**
26	Ventilation Subsystems	XX	1	1	2	26	0.077	7.40E-03	**5.69E-04**
27	Transformer - Catastrophic	TY	0	1	0	9	0.000	6.00E-03	**0.00E+00**
28	Transformer - Non Catastrophic	TY	0	1	0	8	0.000	1.20E-02	**0.00E+00**
29	Yard Transformers (others)	TY	0	1	0	1	0.000	2.20E-03	**0.00E+00**
30	Boiler	TB	0	1	0	2	0.000	1.10E-03	**0.00E+00**
31	Cable Fires caused by welding and cutting (Turbine Building)	TB	0	1	0	224	0.000	1.60E-03	**0.00E+00**
32	Main Feedwater Pumps	TB	1	1	0	8	0.000	1.30E-02	**0.00E+00**
33	Turbine Generator Excitor	TB	0	1	0	1	0.000	3.90E-03	**0.00E+00**
34	Turbine Generator Hydrogen	TB	0	1	0	1	0.000	6.50E-03	**0.00E+00**
35	Turbine Generator Oil	TB	0	1	0	1	0.000	9.50E-03	**0.00E+00**
36	Transient fires caused by welding and cutting (Turbine Building)	TB	0	1	0	17	0.000	8.20E-03	**0.00E+00**
37	Transients (Turbine Building)	TB	0	1	0	17	0.000	8.50E-03	**0.00E+00**
Compartment Fire Frequency (FL)			**3.48E-03**						
Notes:									
(A) Number of Ignition Sources in Compartment									
(B) Total Number of Ignition Sources in Selected Plant Location or in Plant for Plant Wide Components									
*Ignition Source Frequency: FIF = WFL*WFIS*FF*									
Compartment Fire Frequency: FL = SUM(FIF)									

Table 12A-67

F9150 - Fire Compartment Ignition Source Data Sheet (ISDS)

Compartment Description									
	Fire Area		Fire Area F9150						
	Fire Compartment		F9150	Cable Tunnel A					
Compartment Fire Ignition Frequency									
Step 1.1	Plant Location ID		XX						
	Plant Location Description		Plant-Wide						
Step 1.2	Location Weighting Factor (WFL)		1.00E+00	Plant Location					
	Location Weighting Factor (WFL)		1.00E+00	Plant Wide Components					
Compartment Ignition Sources		Plant	App. to	Weighting	Sources in	Sources in	Weighting	Fire	**Ignition Source**
(FIF)		Location	This Area	Factor	Compartment	Plant Location	Factor	Frequency	**Frequency**
Bin #	Ignition Source	L	APP	WFL	(A)	(B)	WFIS=(A)/(B)	(FF)	**(FIF)**
01	Batteries	BR	1	1	0	21	0.000	7.50E-04	**0.00E+00**
02	Reactor Coolant Pump	COP	0	1	0	0	0.000	6.10E-03	**0.00E+00**
03	Transients and Hotwork	COP	0	1	0	0	0.000	2.00E-03	**0.00E+00**
04	Main Control Board	CR	0	1	0	0	0.000	2.50E-03	**0.00E+00**
05	Cable Fires caused by welding and cutting (Cntrl/Aux/Rx Building)	CAR	0	1	0	1166	0.000	1.60E-03	**0.00E+00**
06	Transient fires caused by welding and cutting (Cntrl/Aux/Rx Building)	CAR	0	1	0	53	0.000	9.70E-03	**0.00E+00**
07	Transients (Cntrl/Aux/Rx Building)	CAR	0	1	0	53	0.000	3.90E-03	**0.00E+00**
08	Diesel Generators	DGR	1	1	0	4	0.000	2.10E-02	**0.00E+00**
09	Air Compressors	XX	1	1	0	4	0.000	2.40E-03	**0.00E+00**
10	Battery Chargers	XX	1	1	0	15	0.000	1.80E-03	**0.00E+00**
11	Cable Fires caused by welding and cutting (Plant-Wide)	XX	1	1	105	430	0.244	2.00E-03	**4.88E-04**
12	Cable Run	XX	1	1	105	1820	0.058	4.40E-03	**2.54E-04**
13	Dryers	XX	1	1	0	2	0.000	2.60E-03	**0.00E+00**
14	Electric Motors	XX	1	1	0	8	0.000	4.60E-03	**0.00E+00**
15	Electrical Cabinets	XX	1	1	0	530	0.000	4.50E-02	**0.00E+00**
16	High Energy Arcing Faults	XX	1	1	0	77	0.000	1.50E-03	**0.00E+00**
17	Hydrogen Tanks	XX	1	1	0	2	0.000	1.70E-03	**0.00E+00**
18	Junction Boxes	XX	1	1	105	1820	0.058	1.90E-03	**1.10E-04**
19	Misc. Hydrogen Fires	XX	1	1	0	0	0.000	2.50E-03	**0.00E+00**
20	Off-gas/H2 Recombiner (BWR)	XX	1	1	0	2	0.000	4.40E-02	**0.00E+00**
21	Pumps	XX	1	1	0	43	0.000	2.10E-02	**0.00E+00**
22	RPS MG Sets	XX	0	1	0	0	0.000	1.60E-03	**0.00E+00**
23a	Transformers (oil filled)	XX	1	1	0	0	0.000	9.90E-03	**0.00E+00**
23b	Transformers (dry)	XX	1	1	0	67	0.000	9.90E-03	**0.00E+00**
24	Transient fires caused by welding and cutting (Plant-Wide)	XX	1	1	1	78	0.013	4.90E-03	**6.28E-05**
25	Transients (Plant-Wide)	XX	1	1	1	78	0.013	9.90E-03	**1.27E-04**
26	Ventilation Subsystems	XX	1	1	0	26	0.000	7.40E-03	**0.00E+00**
27	Transformer - Catastrophic	TY	0	1	0	9	0.000	6.00E-03	**0.00E+00**
28	Transformer - Non Catastrophic	TY	0	1	0	8	0.000	1.20E-02	**0.00E+00**
29	Yard Transformers (others)	TY	0	1	0	1	0.000	2.20E-03	**0.00E+00**
30	Boiler	TB	0	1	0	2	0.000	1.10E-03	**0.00E+00**
31	Cable Fires caused by welding and cutting (Turbine Building)	TB	0	1	0	224	0.000	1.60E-03	**0.00E+00**
32	Main Feedwater Pumps	TB	1	1	0	8	0.000	1.30E-02	**0.00E+00**
33	Turbine Generator Excitor	TB	0	1	0	1	0.000	3.90E-03	**0.00E+00**
34	Turbine Generator Hydrogen	TB	0	1	0	1	0.000	6.50E-03	**0.00E+00**
35	Turbine Generator Oil	TB	0	1	0	1	0.000	9.50E-03	**0.00E+00**
36	Transient fires caused by welding and cutting (Turbine Building)	TB	0	1	0	17	0.000	8.20E-03	**0.00E+00**
37	Transients (Turbine Building)	TB	0	1	0	17	0.000	8.50E-03	**0.00E+00**
Compartment Fire Frequency (FL)			**1.04E-03**						
Notes:									
(A) Number of Ignition Sources in Compartment									
(B) Total Number of Ignition Sources in Selected Plant Location or in Plant for Plant Wide Components									
*Ignition Source Frequency: FIF = WFL*WFIS*FF*									
Compartment Fire Frequency: FL = SUM(FIF)									

Table 12A-68

F9160 - Fire Compartment Ignition Source Data Sheet (ISDS)

Compartment Description									
	Fire Area		Fire Area F9160						
	Fire Compartment		F9160	Cable Tunnel B					
Compartment Fire Ignition Frequency									
Step 1.1	Plant Location ID		XX						
	Plant Location Description		Plant-Wide						
Step 1.2	Location Weighting Factor (WFL)		1.00E+00	Plant Location					
	Location Weighting Factor (WFL)		1.00E+00	Plant Wide Components					
Compartment Ignition Sources		Plant	App. to	Weighting	Sources in	Sources in	Weighting	Fire	**Ignition Source**
(FIF)		Location	This Area	Factor	Compartment	Plant Location	Factor	Frequency	**Frequency**
Bin #	Ignition Source	L	APP	WFL	(A)	(B)	WFIS=(A)/(B)	(FF)	**(FIF)**
01	Batteries	BR	1	1	0	21	0.000	7.50E-04	**0.00E+00**
02	Reactor Coolant Pump	COP	0	1	0	0	0.000	6.10E-03	**0.00E+00**
03	Transients and Hotwork	COP	0	1	0	0	0.000	2.00E-03	**0.00E+00**
04	Main Control Board	CR	0	1	0	0	0.000	2.50E-03	**0.00E+00**
05	Cable Fires caused by welding and cutting (Cntrl/Aux/Rx Building)	CAR	0	1	0	1166	0.000	1.60E-03	**0.00E+00**
06	Transient fires caused by welding and cutting (Cntrl/Aux/Rx Building)	CAR	0	1	0	53	0.000	9.70E-03	**0.00E+00**
07	Transients (Cntrl/Aux/Rx Building)	CAR	0	1	0	53	0.000	3.90E-03	**0.00E+00**
08	Diesel Generators	DGR	1	1	0	4	0.000	2.10E-02	**0.00E+00**
09	Air Compressors	XX	1	1	0	4	0.000	2.40E-03	**0.00E+00**
10	Battery Chargers	XX	1	1	0	15	0.000	1.80E-03	**0.00E+00**
11	Cable Fires caused by welding and cutting (Plant-Wide)	XX	1	1	121	430	0.281	2.00E-03	**5.63E-04**
12	Cable Run	XX	1	1	121	1820	0.066	4.40E-03	**2.93E-04**
13	Dryers	XX	1	1	0	2	0.000	2.60E-03	**0.00E+00**
14	Electric Motors	XX	1	1	0	8	0.000	4.60E-03	**0.00E+00**
15	Electrical Cabinets	XX	1	1	0	530	0.000	4.50E-02	**0.00E+00**
16	High Energy Arcing Faults	XX	1	1	0	77	0.000	1.50E-03	**0.00E+00**
17	Hydrogen Tanks	XX	1	1	0	2	0.000	1.70E-03	**0.00E+00**
18	Junction Boxes	XX	1	1	121	1820	0.066	1.90E-03	**1.26E-04**
19	Misc. Hydrogen Fires	XX	1	1	0	0	0.000	2.50E-03	**0.00E+00**
20	Off-gas/H2 Recombiner (BWR)	XX	1	1	0	2	0.000	4.40E-02	**0.00E+00**
21	Pumps	XX	1	1	0	43	0.000	2.10E-02	**0.00E+00**
22	RPS MG Sets	XX	0	1	0	0	0.000	1.60E-03	**0.00E+00**
23a	Transformers (oil filled)	XX	1	1	0	0	0.000	9.90E-03	**0.00E+00**
23b	Transformers (dry)	XX	1	1	0	67	0.000	9.90E-03	**0.00E+00**
24	Transient fires caused by welding and cutting (Plant-Wide)	XX	1	1	1	78	0.013	4.90E-03	**6.28E-05**
25	Transients (Plant-Wide)	XX	1	1	1	78	0.013	9.90E-03	**1.27E-04**
26	Ventilation Subsystems	XX	1	1	0	26	0.000	7.40E-03	**0.00E+00**
27	Transformer - Catastrophic	TY	0	1	0	9	0.000	6.00E-03	**0.00E+00**
28	Transformer - Non Catastrophic	TY	0	1	0	8	0.000	1.20E-02	**0.00E+00**
29	Yard Transformers (others)	TY	0	1	0	1	0.000	2.20E-03	**0.00E+00**
30	Boiler	TB	0	1	0	2	0.000	1.10E-03	**0.00E+00**
31	Cable Fires caused by welding and cutting (Turbine Building)	TB	0	1	0	224	0.000	1.60E-03	**0.00E+00**
32	Main Feedwater Pumps	TB	1	1	0	8	0.000	1.30E-02	**0.00E+00**
33	Turbine Generator Excitor	TB	0	1	0	1	0.000	3.90E-03	**0.00E+00**
34	Turbine Generator Hydrogen	TB	0	1	0	1	0.000	6.50E-03	**0.00E+00**
35	Turbine Generator Oil	TB	0	1	0	1	0.000	9.50E-03	**0.00E+00**
36	Transient fires caused by welding and cutting (Turbine Building)	TB	0	1	0	17	0.000	8.20E-03	**0.00E+00**
37	Transients (Turbine Building)	TB	0	1	0	17	0.000	8.50E-03	**0.00E+00**
Compartment Fire Frequency (FL)			**1.17E-03**						
Notes:									
(A) Number of Ignition Sources in Compartment									
(B) Total Number of Ignition Sources in Selected Plant Location or in Plant for Plant Wide Components									
*Ignition Source Frequency: FIF = WFL*WFIS*FF*									
Compartment Fire Frequency: FL = SUM(FIF)									

Table 12A-69

F19101 - Fire Compartment Ignition Source Data Sheet (ISDS)

Compartment Description									
	Fire Area		Fire Area F19101						
	Fire Compartment		F19101	Electric Motor Driven G21 Pump					
Compartment Fire Ignition Frequency									
Step 1.1	Plant Location ID		XX						
	Plant Location Description		Plant-Wide						
Step 1.2	Location Weighting Factor (WFL)		1.00E+00	Plant Location					
	Location Weighting Factor (WFL)		1.00E+00	Plant Wide Components					
Compartment Ignition Sources		Plant	App. to	Weighting	Sources in	Sources in	Weighting	Fire	**Ignition Source**
(FIF)		Location	This Area	Factor	Compartment	Plant Location	Factor	Frequency	**Frequency**
Bin #	Ignition Source	L	APP	WFL	(A)	(B)	WFIS=(A)/(B)	(FF)	**(FIF)**
01	Batteries	BR	1	1	0	21	0.000	7.50E-04	**0.00E+00**
02	Reactor Coolant Pump	COP	0	1	0	0	0.000	6.10E-03	**0.00E+00**
03	Transients and Hotwork	COP	0	1	0	0	0.000	2.00E-03	**0.00E+00**
04	Main Control Board	CR	0	1	0	0	0.000	2.50E-03	**0.00E+00**
05	Cable Fires caused by welding and cutting (Cntrl/Aux/Rx Building)	CAR	0	1	0	1166	0.000	1.60E-03	**0.00E+00**
06	Transient fires caused by welding and cutting (Cntrl/Aux/Rx Building)	CAR	0	1	0	53	0.000	9.70E-03	**0.00E+00**
07	Transients (Cntrl/Aux/Rx Building)	CAR	0	1	0	53	0.000	3.90E-03	**0.00E+00**
08	Diesel Generators	DGR	1	1	0	4	0.000	2.10E-02	**0.00E+00**
09	Air Compressors	XX	1	1	0	4	0.000	2.40E-03	**0.00E+00**
10	Battery Chargers	XX	1	1	0	15	0.000	1.80E-03	**0.00E+00**
11	Cable Fires caused by welding and cutting (Plant-Wide)	XX	1	1	1	430	0.002	2.00E-03	**4.65E-06**
12	Cable Run	XX	1	1	1	1820	0.001	4.40E-03	**2.42E-06**
13	Dryers	XX	1	1	0	2	0.000	2.60E-03	**0.00E+00**
14	Electric Motors	XX	1	1	0	8	0.000	4.60E-03	**0.00E+00**
15	Electrical Cabinets	XX	1	1	0	530	0.000	4.50E-02	**0.00E+00**
16	High Energy Arcing Faults	XX	1	1	0	77	0.000	1.50E-03	**0.00E+00**
17	Hydrogen Tanks	XX	1	1	0	2	0.000	1.70E-03	**0.00E+00**
18	Junction Boxes	XX	1	1	1	1820	0.001	1.90E-03	**1.04E-06**
19	Misc. Hydrogen Fires	XX	1	1	0	0	0.000	2.50E-03	**0.00E+00**
20	Off-gas/H2 Recombiner (BWR)	XX	1	1	0	2	0.000	4.40E-02	**0.00E+00**
21	Pumps	XX	1	1	1	43	0.023	2.10E-02	**4.88E-04**
22	RPS MG Sets	XX	0	1	0	0	0.000	1.60E-03	**0.00E+00**
23a	Transformers (oil filled)	XX	1	1	0	0	0.000	9.90E-03	**0.00E+00**
23b	Transformers (dry)	XX	1	1	0	67	0.000	9.90E-03	**0.00E+00**
24	Transient fires caused by welding and cutting (Plant-Wide)	XX	1	1	1	78	0.013	4.90E-03	**6.28E-05**
25	Transients (Plant-Wide)	XX	1	1	1	78	0.013	9.90E-03	**1.27E-04**
26	Ventilation Subsystems	XX	1	1	0	26	0.000	7.40E-03	**0.00E+00**
27	Transformer - Catastrophic	TY	0	1	0	9	0.000	6.00E-03	**0.00E+00**
28	Transformer - Non Catastrophic	TY	0	1	0	8	0.000	1.20E-02	**0.00E+00**
29	Yard Transformers (others)	TY	0	1	0	1	0.000	2.20E-03	**0.00E+00**
30	Boiler	TB	0	1	0	2	0.000	1.10E-03	**0.00E+00**
31	Cable Fires caused by welding and cutting (Turbine Building)	TB	0	1	0	224	0.000	1.60E-03	**0.00E+00**
32	Main Feedwater Pumps	TB	1	1	0	8	0.000	1.30E-02	**0.00E+00**
33	Turbine Generator Excitor	TB	0	1	0	1	0.000	3.90E-03	**0.00E+00**
34	Turbine Generator Hydrogen	TB	0	1	0	1	0.000	6.50E-03	**0.00E+00**
35	Turbine Generator Oil	TB	0	1	0	1	0.000	9.50E-03	**0.00E+00**
36	Transient fires caused by welding and cutting (Turbine Building)	TB	0	1	0	17	0.000	8.20E-03	**0.00E+00**
37	Transients (Turbine Building)	TB	0	1	0	17	0.000	8.50E-03	**0.00E+00**
Compartment Fire Frequency (FL)			**6.86E-04**						
Notes:									
(A) Number of Ignition Sources in Compartment									
(B) Total Number of Ignition Sources in Selected Plant Location or in Plant for Plant Wide Components									
*Ignition Source Frequency: FIF = WFL*WFIS*FF*									
Compartment Fire Frequency: FL = SUM(FIF)									

Table 12A-70

F19150 - Fire Compartment Ignition Source Data Sheet (ISDS)

Compartment Description									
	Fire Area		Fire Area F19150						
	Fire Compartment		F19150	Primary Electric Motor Driven Fire Pump					
Compartment Fire Ignition Frequency									
Step 1.1	Plant Location ID		XX						
	Plant Location Description		Plant-Wide						
Step 1.2	Location Weighting Factor (WFL)		1.00E+00	Plant Location					
	Location Weighting Factor (WFL)		1.00E+00	Plant Wide Components					
Compartment Ignition Sources		Plant	App. to	Weighting	Sources in	Sources in	Weighting	Fire	**Ignition Source**
(FIF)		Location	This Area	Factor	Compartment	Plant Location	Factor	Frequency	**Frequency**
Bin #	Ignition Source	L	APP	WFL	(A)	(B)	WFIS=(A)/(B)	(FF)	**(FIF)**
01	Batteries	BR	1	1	0	21	0.000	7.50E-04	**0.00E+00**
02	Reactor Coolant Pump	COP	0	1	0	0	0.000	6.10E-03	**0.00E+00**
03	Transients and Hotwork	COP	0	1	0	0	0.000	2.00E-03	**0.00E+00**
04	Main Control Board	CR	0	1	0	0	0.000	2.50E-03	**0.00E+00**
05	Cable Fires caused by welding and cutting (Cntrl/Aux/Rx Building)	CAR	0	1	0	1166	0.000	1.60E-03	**0.00E+00**
06	Transient fires caused by welding and cutting (Cntrl/Aux/Rx Building)	CAR	0	1	0	53	0.000	9.70E-03	**0.00E+00**
07	Transients (Cntrl/Aux/Rx Building)	CAR	0	1	0	53	0.000	3.90E-03	**0.00E+00**
08	Diesel Generators	DGR	1	1	0	4	0.000	2.10E-02	**0.00E+00**
09	Air Compressors	XX	1	1	0	4	0.000	2.40E-03	**0.00E+00**
10	Battery Chargers	XX	1	1	0	15	0.000	1.80E-03	**0.00E+00**
11	Cable Fires caused by welding and cutting (Plant-Wide)	XX	1	1	4	430	0.009	2.00E-03	**1.86E-05**
12	Cable Run	XX	1	1	4	1820	0.002	4.40E-03	**9.67E-06**
13	Dryers	XX	1	1	0	2	0.000	2.60E-03	**0.00E+00**
14	Electric Motors	XX	1	1	0	8	0.000	4.60E-03	**0.00E+00**
15	Electrical Cabinets	XX	1	1	0	530	0.000	4.50E-02	**0.00E+00**
16	High Energy Arcing Faults	XX	1	1	0	77	0.000	1.50E-03	**0.00E+00**
17	Hydrogen Tanks	XX	1	1	0	2	0.000	1.70E-03	**0.00E+00**
18	Junction Boxes	XX	1	1	4	1820	0.002	1.90E-03	**4.18E-06**
19	Misc. Hydrogen Fires	XX	1	1	0	0	0.000	2.50E-03	**0.00E+00**
20	Off-gas/H2 Recombiner (BWR)	XX	1	1	0	2	0.000	4.40E-02	**0.00E+00**
21	Pumps	XX	1	1	2	43	0.047	2.10E-02	**9.77E-04**
22	RPS MG Sets	XX	0	1	0	0	0.000	1.60E-03	**0.00E+00**
23a	Transformers (oil filled)	XX	1	1	0	0	0.000	9.90E-03	**0.00E+00**
23b	Transformers (dry)	XX	1	1	0	67	0.000	9.90E-03	**0.00E+00**
24	Transient fires caused by welding and cutting (Plant-Wide)	XX	1	1	1	78	0.013	4.90E-03	**6.28E-05**
25	Transients (Plant-Wide)	XX	1	1	1	78	0.013	9.90E-03	**1.27E-04**
26	Ventilation Subsystems	XX	1	1	0	26	0.000	7.40E-03	**0.00E+00**
27	Transformer - Catastrophic	TY	0	1	0	9	0.000	6.00E-03	**0.00E+00**
28	Transformer - Non Catastrophic	TY	0	1	0	8	0.000	1.20E-02	**0.00E+00**
29	Yard Transformers (others)	TY	0	1	0	1	0.000	2.20E-03	**0.00E+00**
30	Boiler	TB	0	1	0	2	0.000	1.10E-03	**0.00E+00**
31	Cable Fires caused by welding and cutting (Turbine Building)	TB	0	1	0	224	0.000	1.60E-03	**0.00E+00**
32	Main Feedwater Pumps	TB	1	1	0	8	0.000	1.30E-02	**0.00E+00**
33	Turbine Generator Excitor	TB	0	1	0	1	0.000	3.90E-03	**0.00E+00**
34	Turbine Generator Hydrogen	TB	0	1	0	1	0.000	6.50E-03	**0.00E+00**
35	Turbine Generator Oil	TB	0	1	0	1	0.000	9.50E-03	**0.00E+00**
36	Transient fires caused by welding and cutting (Turbine Building)	TB	0	1	0	17	0.000	8.20E-03	**0.00E+00**
37	Transients (Turbine Building)	TB	0	1	0	17	0.000	8.50E-03	**0.00E+00**
Compartment Fire Frequency (FL)			**1.20E-03**						
Notes:									
(A) Number of Ignition Sources in Compartment									
(B) Total Number of Ignition Sources in Selected Plant Location or in Plant for Plant Wide Components									
*Ignition Source Frequency: FIF = WFL*WFIS*FF*									
Compartment Fire Frequency: FL = SUM(FIF)									

Table 12A-71

F19160 - Fire Compartment Ignition Source Data Sheet (ISDS)

Compartment Description									
	Fire Area		Fire Area F19160						
	Fire Compartment		F19160	Primary Diesel Driven Fire Pump					
Compartment Fire Ignition Frequency									
Step 1.1	Plant Location ID		XX						
	Plant Location Description		Plant-Wide						
Step 1.2	Location Weighting Factor (WFL)		1.00E+00	Plant Location					
	Location Weighting Factor (WFL)		1.00E+00	Plant Wide Components					
Compartment Ignition Sources		Plant	App. to	Weighting	Sources in	Sources in	Weighting	Fire	**Ignition Source**
(FIF)		Location	This Area	Factor	Compartment	Plant Location	Factor	Frequency	**Frequency**
Bin #	Ignition Source	L	APP	WFL	(A)	(B)	WFIS=(A)/(B)	(FF)	**(FIF)**
01	Batteries	BR	1	1	0	21	0.000	7.50E-04	**0.00E+00**
02	Reactor Coolant Pump	COP	0	1	0	0	0.000	6.10E-03	**0.00E+00**
03	Transients and Hotwork	COP	0	1	0	0	0.000	2.00E-03	**0.00E+00**
04	Main Control Board	CR	0	1	0	0	0.000	2.50E-03	**0.00E+00**
05	Cable Fires caused by welding and cutting (Cntrl/Aux/Rx Building)	CAR	0	1	0	1166	0.000	1.60E-03	**0.00E+00**
06	Transient fires caused by welding and cutting (Cntrl/Aux/Rx Building)	CAR	0	1	0	53	0.000	9.70E-03	**0.00E+00**
07	Transients (Cntrl/Aux/Rx Building)	CAR	0	1	0	53	0.000	3.90E-03	**0.00E+00**
08	Diesel Generators	DGR	1	1	0	4	0.000	2.10E-02	**0.00E+00**
09	Air Compressors	XX	1	1	0	4	0.000	2.40E-03	**0.00E+00**
10	Battery Chargers	XX	1	1	0	15	0.000	1.80E-03	**0.00E+00**
11	Cable Fires caused by welding and cutting (Plant-Wide)	XX	1	1	0	430	0.000	2.00E-03	**0.00E+00**
12	Cable Run	XX	1	1	0	1820	0.000	4.40E-03	**0.00E+00**
13	Dryers	XX	1	1	0	2	0.000	2.60E-03	**0.00E+00**
14	Electric Motors	XX	1	1	0	8	0.000	4.60E-03	**0.00E+00**
15	Electrical Cabinets	XX	1	1	0	530	0.000	4.50E-02	**0.00E+00**
16	High Energy Arcing Faults	XX	1	1	0	77	0.000	1.50E-03	**0.00E+00**
17	Hydrogen Tanks	XX	1	1	0	2	0.000	1.70E-03	**0.00E+00**
18	Junction Boxes	XX	1	1	0	1820	0.000	1.90E-03	**0.00E+00**
19	Misc. Hydrogen Fires	XX	1	1	0	0	0.000	2.50E-03	**0.00E+00**
20	Off-gas/H2 Recombiner (BWR)	XX	1	1	0	2	0.000	4.40E-02	**0.00E+00**
21	Pumps	XX	1	1	2	43	0.047	2.10E-02	**9.77E-04**
22	RPS MG Sets	XX	0	1	0	0	0.000	1.60E-03	**0.00E+00**
23a	Transformers (oil filled)	XX	1	1	0	0	0.000	9.90E-03	**0.00E+00**
23b	Transformers (dry)	XX	1	1	0	67	0.000	9.90E-03	**0.00E+00**
24	Transient fires caused by welding and cutting (Plant-Wide)	XX	1	1	1	78	0.013	4.90E-03	**6.28E-05**
25	Transients (Plant-Wide)	XX	1	1	1	78	0.013	9.90E-03	**1.27E-04**
26	Ventilation Subsystems	XX	1	1	0	26	0.000	7.40E-03	**0.00E+00**
27	Transformer - Catastrophic	TY	0	1	0	9	0.000	6.00E-03	**0.00E+00**
28	Transformer - Non Catastrophic	TY	0	1	0	8	0.000	1.20E-02	**0.00E+00**
29	Yard Transformers (others)	TY	0	1	0	1	0.000	2.20E-03	**0.00E+00**
30	Boiler	TB	0	1	0	2	0.000	1.10E-03	**0.00E+00**
31	Cable Fires caused by welding and cutting (Turbine Building)	TB	0	1	0	224	0.000	1.60E-03	**0.00E+00**
32	Main Feedwater Pumps	TB	1	1	0	8	0.000	1.30E-02	**0.00E+00**
33	Turbine Generator Excitor	TB	0	1	0	1	0.000	3.90E-03	**0.00E+00**
34	Turbine Generator Hydrogen	TB	0	1	0	1	0.000	6.50E-03	**0.00E+00**
35	Turbine Generator Oil	TB	0	1	0	1	0.000	9.50E-03	**0.00E+00**
36	Transient fires caused by welding and cutting (Turbine Building)	TB	0	1	0	17	0.000	8.20E-03	**0.00E+00**
37	Transients (Turbine Building)	TB	0	1	0	17	0.000	8.50E-03	**0.00E+00**
Compartment Fire Frequency (FL)			**1.17E-03**						
Notes:									
(A) Number of Ignition Sources in Compartment									
(B) Total Number of Ignition Sources in Selected Plant Location or in Plant for Plant Wide Components									
*Ignition Source Frequency: FIF = WFL*WFIS*FF*									
Compartment Fire Frequency: FL = SUM(FIF)									

Table 12A-72

F19161 - Fire Compartment Ignition Source Data Sheet (ISDS)

Compartment Description									
	Fire Area		Fire Area F19161						
	Fire Compartment		F19161	Primary Diesel Fire Pump Fuel Oil Storage Tank					
Compartment Fire Ignition Frequency									
Step 1.1	Plant Location ID		XX						
	Plant Location Description		Plant-Wide						
Step 1.2	Location Weighting Factor (WFL)		1.00E+00	Plant Location					
	Location Weighting Factor (WFL)		1.00E+00	Plant Wide Components					
Compartment Ignition Sources		Plant	App. to	Weighting	Sources in	Sources in	Weighting	Fire	**Ignition Source**
(FIF)		Location	This Area	Factor	Compartment	Plant Location	Factor	Frequency	**Frequency**
Bin #	Ignition Source	L	APP	WFL	(A)	(B)	WFIS=(A)/(B)	(FF)	**(FIF)**
01	Batteries	BR	1	1	0	21	0.000	7.50E-04	**0.00E+00**
02	Reactor Coolant Pump	COP	0	1	0	0	0.000	6.10E-03	**0.00E+00**
03	Transients and Hotwork	COP	0	1	0	0	0.000	2.00E-03	**0.00E+00**
04	Main Control Board	CR	0	1	0	0	0.000	2.50E-03	**0.00E+00**
05	Cable Fires caused by welding and cutting (Cntrl/Aux/Rx Building)	CAR	0	1	0	1166	0.000	1.60E-03	**0.00E+00**
06	Transient fires caused by welding and cutting (Cntrl/Aux/Rx Building)	CAR	0	1	0	53	0.000	9.70E-03	**0.00E+00**
07	Transients (Cntrl/Aux/Rx Building)	CAR	0	1	0	53	0.000	3.90E-03	**0.00E+00**
08	Diesel Generators	DGR	1	1	0	4	0.000	2.10E-02	**0.00E+00**
09	Air Compressors	XX	1	1	0	4	0.000	2.40E-03	**0.00E+00**
10	Battery Chargers	XX	1	1	0	15	0.000	1.80E-03	**0.00E+00**
11	Cable Fires caused by welding and cutting (Plant-Wide)	XX	1	1	0	430	0.000	2.00E-03	**0.00E+00**
12	Cable Run	XX	1	1	0	1820	0.000	4.40E-03	**0.00E+00**
13	Dryers	XX	1	1	0	2	0.000	2.60E-03	**0.00E+00**
14	Electric Motors	XX	1	1	0	8	0.000	4.60E-03	**0.00E+00**
15	Electrical Cabinets	XX	1	1	0	530	0.000	4.50E-02	**0.00E+00**
16	High Energy Arcing Faults	XX	1	1	0	77	0.000	1.50E-03	**0.00E+00**
17	Hydrogen Tanks	XX	1	1	0	2	0.000	1.70E-03	**0.00E+00**
18	Junction Boxes	XX	1	1	0	1820	0.000	1.90E-03	**0.00E+00**
19	Misc. Hydrogen Fires	XX	1	1	0	0	0.000	2.50E-03	**0.00E+00**
20	Off-gas/H2 Recombiner (BWR)	XX	1	1	0	2	0.000	4.40E-02	**0.00E+00**
21	Pumps	XX	1	1	0	43	0.000	2.10E-02	**0.00E+00**
22	RPS MG Sets	XX	0	1	0	0	0.000	1.60E-03	**0.00E+00**
23a	Transformers (oil filled)	XX	1	1	0	0	0.000	9.90E-03	**0.00E+00**
23b	Transformers (dry)	XX	1	1	0	67	0.000	9.90E-03	**0.00E+00**
24	Transient fires caused by welding and cutting (Plant-Wide)	XX	1	1	1	78	0.013	4.90E-03	**6.28E-05**
25	Transients (Plant-Wide)	XX	1	1	1	78	0.013	9.90E-03	**1.27E-04**
26	Ventilation Subsystems	XX	1	1	0	26	0.000	7.40E-03	**0.00E+00**
27	Transformer - Catastrophic	TY	0	1	0	9	0.000	6.00E-03	**0.00E+00**
28	Transformer - Non Catastrophic	TY	0	1	0	8	0.000	1.20E-02	**0.00E+00**
29	Yard Transformers (others)	TY	0	1	0	1	0.000	2.20E-03	**0.00E+00**
30	Boiler	TB	0	1	0	2	0.000	1.10E-03	**0.00E+00**
31	Cable Fires caused by welding and cutting (Turbine Building)	TB	0	1	0	224	0.000	1.60E-03	**0.00E+00**
32	Main Feedwater Pumps	TB	1	1	0	8	0.000	1.30E-02	**0.00E+00**
33	Turbine Generator Excitor	TB	0	1	0	1	0.000	3.90E-03	**0.00E+00**
34	Turbine Generator Hydrogen	TB	0	1	0	1	0.000	6.50E-03	**0.00E+00**
35	Turbine Generator Oil	TB	0	1	0	1	0.000	9.50E-03	**0.00E+00**
36	Transient fires caused by welding and cutting (Turbine Building)	TB	0	1	0	17	0.000	8.20E-03	**0.00E+00**
37	Transients (Turbine Building)	TB	0	1	0	17	0.000	8.50E-03	**0.00E+00**
Compartment Fire Frequency (FL)			**1.90E-04**						
Notes:									
(A) Number of Ignition Sources in Compartment									
(B) Total Number of Ignition Sources in Selected Plant Location or in Plant for Plant Wide Components									
*Ignition Source Frequency: FIF = WFL*WFIS*FF*									
Compartment Fire Frequency: FL = SUM(FIF)									

Table 12A-73

F39151 - Fire Compartment Ignition Source Data Sheet (ISDS)

Compartment Description									
	Fire Area		Fire Area F39151						
	Fire Compartment		F39151	Ancilliary Diesel Generator A/Fuel Oil Storage					
Compartment Fire Ignition Frequency									
Step 1.1	Plant Location ID		XX						
	Plant Location Description		Plant-Wide						
Step 1.2	Location Weighting Factor (WFL)		1.00E+00	Plant Location					
	Location Weighting Factor (WFL)		1.00E+00	Plant Wide Components					
Compartment Ignition Sources		Plant	App. to	Weighting	Sources in	Sources in	Weighting	Fire	**Ignition Source**
(FIF)		Location	This Area	Factor	Compartment	Plant Location	Factor	Frequency	**Frequency**
Bin #	Ignition Source	L	APP	WFL	(A)	(B)	WFIS=(A)/(B)	(FF)	**(FIF)**
01	Batteries	BR	1	1	0	21	0.000	7.50E-04	**0.00E+00**
02	Reactor Coolant Pump	COP	0	1	0	0	0.000	6.10E-03	**0.00E+00**
03	Transients and Hotwork	COP	0	1	0	0	0.000	2.00E-03	**0.00E+00**
04	Main Control Board	CR	0	1	0	0	0.000	2.50E-03	**0.00E+00**
05	Cable Fires caused by welding and cutting (Cntrl/Aux/Rx Building)	CAR	0	1	0	1166	0.000	1.60E-03	**0.00E+00**
06	Transient fires caused by welding and cutting (Cntrl/Aux/Rx Building)	CAR	0	1	0	53	0.000	9.70E-03	**0.00E+00**
07	Transients (Cntrl/Aux/Rx Building)	CAR	0	1	0	53	0.000	3.90E-03	**0.00E+00**
08	Diesel Generators	DGR	1	1	0	4	0.000	2.10E-02	**0.00E+00**
09	Air Compressors	XX	1	1	0	4	0.000	2.40E-03	**0.00E+00**
10	Battery Chargers	XX	1	1	0	15	0.000	1.80E-03	**0.00E+00**
11	Cable Fires caused by welding and cutting (Plant-Wide)	XX	1	1	0	430	0.000	2.00E-03	**0.00E+00**
12	Cable Run	XX	1	1	0	1820	0.000	4.40E-03	**0.00E+00**
13	Dryers	XX	1	1	0	2	0.000	2.60E-03	**0.00E+00**
14	Electric Motors	XX	1	1	0	8	0.000	4.60E-03	**0.00E+00**
15	Electrical Cabinets	XX	1	1	0	530	0.000	4.50E-02	**0.00E+00**
16	High Energy Arcing Faults	XX	1	1	0	77	0.000	1.50E-03	**0.00E+00**
17	Hydrogen Tanks	XX	1	1	0	2	0.000	1.70E-03	**0.00E+00**
18	Junction Boxes	XX	1	1	0	1820	0.000	1.90E-03	**0.00E+00**
19	Misc. Hydrogen Fires	XX	1	1	0	0	0.000	2.50E-03	**0.00E+00**
20	Off-gas/H2 Recombiner (BWR)	XX	1	1	0	2	0.000	4.40E-02	**0.00E+00**
21	Pumps	XX	1	1	1	43	0.023	2.10E-02	**4.88E-04**
22	RPS MG Sets	XX	0	1	0	0	0.000	1.60E-03	**0.00E+00**
23a	Transformers (oil filled)	XX	1	1	0	0	0.000	9.90E-03	**0.00E+00**
23b	Transformers (dry)	XX	1	1	0	67	0.000	9.90E-03	**0.00E+00**
24	Transient fires caused by welding and cutting (Plant-Wide)	XX	1	1	1	78	0.013	4.90E-03	**6.28E-05**
25	Transients (Plant-Wide)	XX	1	1	1	78	0.013	9.90E-03	**1.27E-04**
26	Ventilation Subsystems	XX	1	1	0	26	0.000	7.40E-03	**0.00E+00**
27	Transformer - Catastrophic	TY	0	1	0	9	0.000	6.00E-03	**0.00E+00**
28	Transformer - Non Catastrophic	TY	0	1	0	8	0.000	1.20E-02	**0.00E+00**
29	Yard Transformers (others)	TY	0	1	0	1	0.000	2.20E-03	**0.00E+00**
30	Boiler	TB	0	1	0	2	0.000	1.10E-03	**0.00E+00**
31	Cable Fires caused by welding and cutting (Turbine Building)	TB	0	1	0	224	0.000	1.60E-03	**0.00E+00**
32	Main Feedwater Pumps	TB	1	1	0	8	0.000	1.30E-02	**0.00E+00**
33	Turbine Generator Excitor	TB	0	1	0	1	0.000	3.90E-03	**0.00E+00**
34	Turbine Generator Hydrogen	TB	0	1	0	1	0.000	6.50E-03	**0.00E+00**
35	Turbine Generator Oil	TB	0	1	0	1	0.000	9.50E-03	**0.00E+00**
36	Transient fires caused by welding and cutting (Turbine Building)	TB	0	1	0	17	0.000	8.20E-03	**0.00E+00**
37	Transients (Turbine Building)	TB	0	1	0	17	0.000	8.50E-03	**0.00E+00**
Compartment Fire Frequency (FL)			**6.78E-04**						
Notes:									
(A) Number of Ignition Sources in Compartment									
(B) Total Number of Ignition Sources in Selected Plant Location or in Plant for Plant Wide Components									
*Ignition Source Frequency: FIF = WFL*WFIS*FF*									
Compartment Fire Frequency: FL = SUM(FIF)									

Table 12A-74

F39161 - Fire Compartment Ignition Source Data Sheet (ISDS)

Compartment Description									
	Fire Area		Fire Area F39161						
	Fire Compartment		F39161	Ancilliary Diesel Generator B/Fuel Oil Storage					
Compartment Fire Ignition Frequency									
Step 1.1	Plant Location ID		XX						
	Plant Location Description		Plant-Wide						
Step 1.2	Location Weighting Factor (WFL)		1.00E+00	Plant Location					
	Location Weighting Factor (WFL)		1.00E+00	Plant Wide Components					
Compartment Ignition Sources		Plant	App. to	Weighting	Sources in	Sources in	Weighting	Fire	**Ignition Source**
(FIF)		Location	This Area	Factor	Compartment	Plant Location	Factor	Frequency	**Frequency**
Bin #	Ignition Source	L	APP	WFL	(A)	(B)	WFIS=(A)/(B)	(FF)	**(FIF)**
01	Batteries	BR	1	1	0	21	0.000	7.50E-04	**0.00E+00**
02	Reactor Coolant Pump	COP	0	1	0	0	0.000	6.10E-03	**0.00E+00**
03	Transients and Hotwork	COP	0	1	0	0	0.000	2.00E-03	**0.00E+00**
04	Main Control Board	CR	0	1	0	0	0.000	2.50E-03	**0.00E+00**
05	Cable Fires caused by welding and cutting (Cntrl/Aux/Rx Building)	CAR	0	1	0	1166	0.000	1.60E-03	**0.00E+00**
06	Transient fires caused by welding and cutting (Cntrl/Aux/Rx Building)	CAR	0	1	0	53	0.000	9.70E-03	**0.00E+00**
07	Transients (Cntrl/Aux/Rx Building)	CAR	0	1	0	53	0.000	3.90E-03	**0.00E+00**
08	Diesel Generators	DGR	1	1	0	4	0.000	2.10E-02	**0.00E+00**
09	Air Compressors	XX	1	1	0	4	0.000	2.40E-03	**0.00E+00**
10	Battery Chargers	XX	1	1	0	15	0.000	1.80E-03	**0.00E+00**
11	Cable Fires caused by welding and cutting (Plant-Wide)	XX	1	1	0	430	0.000	2.00E-03	**0.00E+00**
12	Cable Run	XX	1	1	0	1820	0.000	4.40E-03	**0.00E+00**
13	Dryers	XX	1	1	0	2	0.000	2.60E-03	**0.00E+00**
14	Electric Motors	XX	1	1	0	8	0.000	4.60E-03	**0.00E+00**
15	Electrical Cabinets	XX	1	1	0	530	0.000	4.50E-02	**0.00E+00**
16	High Energy Arcing Faults	XX	1	1	0	77	0.000	1.50E-03	**0.00E+00**
17	Hydrogen Tanks	XX	1	1	0	2	0.000	1.70E-03	**0.00E+00**
18	Junction Boxes	XX	1	1	0	1820	0.000	1.90E-03	**0.00E+00**
19	Misc. Hydrogen Fires	XX	1	1	0	0	0.000	2.50E-03	**0.00E+00**
20	Off-gas/H2 Recombiner (BWR)	XX	1	1	0	2	0.000	4.40E-02	**0.00E+00**
21	Pumps	XX	1	1	1	43	0.023	2.10E-02	**4.88E-04**
22	RPS MG Sets	XX	0	1	0	0	0.000	1.60E-03	**0.00E+00**
23a	Transformers (oil filled)	XX	1	1	0	0	0.000	9.90E-03	**0.00E+00**
23b	Transformers (dry)	XX	1	1	0	67	0.000	9.90E-03	**0.00E+00**
24	Transient fires caused by welding and cutting (Plant-Wide)	XX	1	1	1	78	0.013	4.90E-03	**6.28E-05**
25	Transients (Plant-Wide)	XX	1	1	1	78	0.013	9.90E-03	**1.27E-04**
26	Ventilation Subsystems	XX	1	1	0	26	0.000	7.40E-03	**0.00E+00**
27	Transformer - Catastrophic	TY	0	1	0	9	0.000	6.00E-03	**0.00E+00**
28	Transformer - Non Catastrophic	TY	0	1	0	8	0.000	1.20E-02	**0.00E+00**
29	Yard Transformers (others)	TY	0	1	0	1	0.000	2.20E-03	**0.00E+00**
30	Boiler	TB	0	1	0	2	0.000	1.10E-03	**0.00E+00**
31	Cable Fires caused by welding and cutting (Turbine Building)	TB	0	1	0	224	0.000	1.60E-03	**0.00E+00**
32	Main Feedwater Pumps	TB	1	1	0	8	0.000	1.30E-02	**0.00E+00**
33	Turbine Generator Excitor	TB	0	1	0	1	0.000	3.90E-03	**0.00E+00**
34	Turbine Generator Hydrogen	TB	0	1	0	1	0.000	6.50E-03	**0.00E+00**
35	Turbine Generator Oil	TB	0	1	0	1	0.000	9.50E-03	**0.00E+00**
36	Transient fires caused by welding and cutting (Turbine Building)	TB	0	1	0	17	0.000	8.20E-03	**0.00E+00**
37	Transients (Turbine Building)	TB	0	1	0	17	0.000	8.50E-03	**0.00E+00**
Compartment Fire Frequency (FL)			**6.78E-04**						
Notes:									
(A) Number of Ignition Sources in Compartment									
(B) Total Number of Ignition Sources in Selected Plant Location or in Plant for Plant Wide Components									
*Ignition Source Frequency: FIF = WFL*WFIS*FF*									
Compartment Fire Frequency: FL = SUM(FIF)									

Table 12A-75

F39252 - Fire Compartment Ignition Source Data Sheet (ISDS)

Compartment Description									
	Fire Area		Fire Area F39252						
	Fire Compartment		F39252	Ancilliary Generator A					
Compartment Fire Ignition Frequency									
Step 1.1	Plant Location ID		XX						
	Plant Location Description		Plant-Wide						
Step 1.2	Location Weighting Factor (WFL)		1.00E+00	Plant Location					
	Location Weighting Factor (WFL)		1.00E+00	Plant Wide Components					
Compartment Ignition Sources		Plant	App. to	Weighting	Sources in	Sources in	Weighting	Fire	**Ignition Source**
(FIF)		Location	This Area	Factor	Compartment	Plant Location	Factor	Frequency	**Frequency**
Bin #	Ignition Source	L	APP	WFL	(A)	(B)	WFIS=(A)/(B)	(FF)	**(FIF)**
01	Batteries	BR	1	1	0	21	0.000	7.50E-04	**0.00E+00**
02	Reactor Coolant Pump	COP	0	1	0	0	0.000	6.10E-03	**0.00E+00**
03	Transients and Hotwork	COP	0	1	0	0	0.000	2.00E-03	**0.00E+00**
04	Main Control Board	CR	0	1	0	0	0.000	2.50E-03	**0.00E+00**
05	Cable Fires caused by welding and cutting (Cntrl/Aux/Rx Building)	CAR	0	1	0	1166	0.000	1.60E-03	**0.00E+00**
06	Transient fires caused by welding and cutting (Cntrl/Aux/Rx Building)	CAR	0	1	0	53	0.000	9.70E-03	**0.00E+00**
07	Transients (Cntrl/Aux/Rx Building)	CAR	0	1	0	53	0.000	3.90E-03	**0.00E+00**
08	Diesel Generators	DGR	1	1	1	4	0.250	2.10E-02	**5.25E-03**
09	Air Compressors	XX	1	1	0	4	0.000	2.40E-03	**0.00E+00**
10	Battery Chargers	XX	1	1	0	15	0.000	1.80E-03	**0.00E+00**
11	Cable Fires caused by welding and cutting (Plant-Wide)	XX	1	1	1	430	0.002	2.00E-03	**4.65E-06**
12	Cable Run	XX	1	1	1	1820	0.001	4.40E-03	**2.42E-06**
13	Dryers	XX	1	1	0	2	0.000	2.60E-03	**0.00E+00**
14	Electric Motors	XX	1	1	0	8	0.000	4.60E-03	**0.00E+00**
15	Electrical Cabinets	XX	1	1	0	530	0.000	4.50E-02	**0.00E+00**
16	High Energy Arcing Faults	XX	1	1	0	77	0.000	1.50E-03	**0.00E+00**
17	Hydrogen Tanks	XX	1	1	0	2	0.000	1.70E-03	**0.00E+00**
18	Junction Boxes	XX	1	1	1	1820	0.001	1.90E-03	**1.04E-06**
19	Misc. Hydrogen Fires	XX	1	1	0	0	0.000	2.50E-03	**0.00E+00**
20	Off-gas/H2 Recombiner (BWR)	XX	1	1	0	2	0.000	4.40E-02	**0.00E+00**
21	Pumps	XX	1	1	0	43	0.000	2.10E-02	**0.00E+00**
22	RPS MG Sets	XX	0	1	0	0	0.000	1.60E-03	**0.00E+00**
23a	Transformers (oil filled)	XX	1	1	0	0	0.000	9.90E-03	**0.00E+00**
23b	Transformers (dry)	XX	1	1	0	67	0.000	9.90E-03	**0.00E+00**
24	Transient fires caused by welding and cutting (Plant-Wide)	XX	1	1	1	78	0.013	4.90E-03	**6.28E-05**
25	Transients (Plant-Wide)	XX	1	1	1	78	0.013	9.90E-03	**1.27E-04**
26	Ventilation Subsystems	XX	1	1	0	26	0.000	7.40E-03	**0.00E+00**
27	Transformer - Catastrophic	TY	0	1	0	9	0.000	6.00E-03	**0.00E+00**
28	Transformer - Non Catastrophic	TY	0	1	0	8	0.000	1.20E-02	**0.00E+00**
29	Yard Transformers (others)	TY	0	1	0	1	0.000	2.20E-03	**0.00E+00**
30	Boiler	TB	0	1	0	2	0.000	1.10E-03	**0.00E+00**
31	Cable Fires caused by welding and cutting (Turbine Building)	TB	0	1	0	224	0.000	1.60E-03	**0.00E+00**
32	Main Feedwater Pumps	TB	1	1	0	8	0.000	1.30E-02	**0.00E+00**
33	Turbine Generator Excitor	TB	0	1	0	1	0.000	3.90E-03	**0.00E+00**
34	Turbine Generator Hydrogen	TB	0	1	0	1	0.000	6.50E-03	**0.00E+00**
35	Turbine Generator Oil	TB	0	1	0	1	0.000	9.50E-03	**0.00E+00**
36	Transient fires caused by welding and cutting (Turbine Building)	TB	0	1	0	17	0.000	8.20E-03	**0.00E+00**
37	Transients (Turbine Building)	TB	0	1	0	17	0.000	8.50E-03	**0.00E+00**
Compartment Fire Frequency (FL)			**5.45E-03**						
Notes:									
(A) Number of Ignition Sources in Compartment									
(B) Total Number of Ignition Sources in Selected Plant Location or in Plant for Plant Wide Components									
*Ignition Source Frequency: FIF = WFL*WFIS*FF*									
Compartment Fire Frequency: FL = SUM(FIF)									

Table 12A-76

F39253 - Fire Compartment Ignition Source Data Sheet (ISDS)

Compartment Description									
	Fire Area		Fire Area F39253						
	Fire Compartment		F39253	ADG Electrical & Control Equipment Room B					
Compartment Fire Ignition Frequency									
Step 1.1	Plant Location ID		XX						
	Plant Location Description		Plant-Wide						
Step 1.2	Location Weighting Factor (WFL)		1.00E+00	Plant Location					
	Location Weighting Factor (WFL)		1.00E+00	Plant Wide Components					
Compartment Ignition Sources		Plant	App. to	Weighting	Sources in	Sources in	Weighting	Fire	**Ignition Source**
(FIF)		Location	This Area	Factor	Compartment	Plant Location	Factor	Frequency	**Frequency**
Bin #	Ignition Source	L	APP	WFL	(A)	(B)	WFIS=(A)/(B)	(FF)	**(FIF)**
01	Batteries	BR	1	1	0	21	0.000	7.50E-04	**0.00E+00**
02	Reactor Coolant Pump	COP	0	1	0	0	0.000	6.10E-03	**0.00E+00**
03	Transients and Hotwork	COP	0	1	0	0	0.000	2.00E-03	**0.00E+00**
04	Main Control Board	CR	0	1	0	0	0.000	2.50E-03	**0.00E+00**
05	Cable Fires caused by welding and cutting (Cntrl/Aux/Rx Building)	CAR	0	1	0	1166	0.000	1.60E-03	**0.00E+00**
06	Transient fires caused by welding and cutting (Cntrl/Aux/Rx Building)	CAR	0	1	0	53	0.000	9.70E-03	**0.00E+00**
07	Transients (Cntrl/Aux/Rx Building)	CAR	0	1	0	53	0.000	3.90E-03	**0.00E+00**
08	Diesel Generators	DGR	1	1	0	4	0.000	2.10E-02	**0.00E+00**
09	Air Compressors	XX	1	1	0	4	0.000	2.40E-03	**0.00E+00**
10	Battery Chargers	XX	1	1	0	15	0.000	1.80E-03	**0.00E+00**
11	Cable Fires caused by welding and cutting (Plant-Wide)	XX	1	1	0	430	0.000	2.00E-03	**0.00E+00**
12	Cable Run	XX	1	1	0	1820	0.000	4.40E-03	**0.00E+00**
13	Dryers	XX	1	1	0	2	0.000	2.60E-03	**0.00E+00**
14	Electric Motors	XX	1	1	0	8	0.000	4.60E-03	**0.00E+00**
15	Electrical Cabinets	XX	1	1	3	530	0.006	4.50E-02	**2.55E-04**
16	High Energy Arcing Faults	XX	1	1	1	77	0.013	1.50E-03	**1.95E-05**
17	Hydrogen Tanks	XX	1	1	0	2	0.000	1.70E-03	**0.00E+00**
18	Junction Boxes	XX	1	1	0	1820	0.000	1.90E-03	**0.00E+00**
19	Misc. Hydrogen Fires	XX	1	1	0	0	0.000	2.50E-03	**0.00E+00**
20	Off-gas/H2 Recombiner (BWR)	XX	1	1	0	2	0.000	4.40E-02	**0.00E+00**
21	Pumps	XX	1	1	0	43	0.000	2.10E-02	**0.00E+00**
22	RPS MG Sets	XX	0	1	0	0	0.000	1.60E-03	**0.00E+00**
23a	Transformers (oil filled)	XX	1	1	0	0	0.000	9.90E-03	**0.00E+00**
23b	Transformers (dry)	XX	1	1	0	67	0.000	9.90E-03	**0.00E+00**
24	Transient fires caused by welding and cutting (Plant-Wide)	XX	1	1	1	78	0.013	4.90E-03	**6.28E-05**
25	Transients (Plant-Wide)	XX	1	1	1	78	0.013	9.90E-03	**1.27E-04**
26	Ventilation Subsystems	XX	1	1	0	26	0.000	7.40E-03	**0.00E+00**
27	Transformer - Catastrophic	TY	0	1	0	9	0.000	6.00E-03	**0.00E+00**
28	Transformer - Non Catastrophic	TY	0	1	0	8	0.000	1.20E-02	**0.00E+00**
29	Yard Transformers (others)	TY	0	1	0	1	0.000	2.20E-03	**0.00E+00**
30	Boiler	TB	0	1	0	2	0.000	1.10E-03	**0.00E+00**
31	Cable Fires caused by welding and cutting (Turbine Building)	TB	0	1	0	224	0.000	1.60E-03	**0.00E+00**
32	Main Feedwater Pumps	TB	1	1	0	8	0.000	1.30E-02	**0.00E+00**
33	Turbine Generator Excitor	TB	0	1	0	1	0.000	3.90E-03	**0.00E+00**
34	Turbine Generator Hydrogen	TB	0	1	0	1	0.000	6.50E-03	**0.00E+00**
35	Turbine Generator Oil	TB	0	1	0	1	0.000	9.50E-03	**0.00E+00**
36	Transient fires caused by welding and cutting (Turbine Building)	TB	0	1	0	17	0.000	8.20E-03	**0.00E+00**
37	Transients (Turbine Building)	TB	0	1	0	17	0.000	8.50E-03	**0.00E+00**
Compartment Fire Frequency (FL)			**4.64E-04**						
Notes:									
(A) Number of Ignition Sources in Compartment									
(B) Total Number of Ignition Sources in Selected Plant Location or in Plant for Plant Wide Components									
*Ignition Source Frequency: FIF = WFL*WFIS*FF*									
Compartment Fire Frequency: FL = SUM(FIF)									

Table 12A-77

F39262 - Fire Compartment Ignition Source Data Sheet (ISDS)

Compartment Description									
	Fire Area		Fire Area F39262						
	Fire Compartment		F39262	Ancilliary Diesel Generator B					
Compartment Fire Ignition Frequency									
Step 1.1	Plant Location ID		XX						
	Plant Location Description		Plant-Wide						
Step 1.2	Location Weighting Factor (WFL)		1.00E+00	Plant Location					
	Location Weighting Factor (WFL)		1.00E+00	Plant Wide Components					
Compartment Ignition Sources		Plant	App. to	Weighting	Sources in	Sources in	Weighting	Fire	**Ignition Source**
(FIF)		Location	This Area	Factor	Compartment	Plant Location	Factor	Frequency	**Frequency**
Bin #	Ignition Source	L	APP	WFL	(A)	(B)	WFIS=(A)/(B)	(FF)	**(FIF)**
01	Batteries	BR	1	1	0	21	0.000	7.50E-04	**0.00E+00**
02	Reactor Coolant Pump	COP	0	1	0	0	0.000	6.10E-03	**0.00E+00**
03	Transients and Hotwork	COP	0	1	0	0	0.000	2.00E-03	**0.00E+00**
04	Main Control Board	CR	0	1	0	0	0.000	2.50E-03	**0.00E+00**
05	Cable Fires caused by welding and cutting (Cntrl/Aux/Rx Building)	CAR	0	1	0	1166	0.000	1.60E-03	**0.00E+00**
06	Transient fires caused by welding and cutting (Cntrl/Aux/Rx Building)	CAR	0	1	0	53	0.000	9.70E-03	**0.00E+00**
07	Transients (Cntrl/Aux/Rx Building)	CAR	0	1	0	53	0.000	3.90E-03	**0.00E+00**
08	Diesel Generators	DGR	1	1	1	4	0.250	2.10E-02	**5.25E-03**
09	Air Compressors	XX	1	1	0	4	0.000	2.40E-03	**0.00E+00**
10	Battery Chargers	XX	1	1	0	15	0.000	1.80E-03	**0.00E+00**
11	Cable Fires caused by welding and cutting (Plant-Wide)	XX	1	1	0	430	0.000	2.00E-03	**0.00E+00**
12	Cable Run	XX	1	1	0	1820	0.000	4.40E-03	**0.00E+00**
13	Dryers	XX	1	1	0	2	0.000	2.60E-03	**0.00E+00**
14	Electric Motors	XX	1	1	0	8	0.000	4.60E-03	**0.00E+00**
15	Electrical Cabinets	XX	1	1	0	530	0.000	4.50E-02	**0.00E+00**
16	High Energy Arcing Faults	XX	1	1	0	77	0.000	1.50E-03	**0.00E+00**
17	Hydrogen Tanks	XX	1	1	0	2	0.000	1.70E-03	**0.00E+00**
18	Junction Boxes	XX	1	1	0	1820	0.000	1.90E-03	**0.00E+00**
19	Misc. Hydrogen Fires	XX	1	1	0	0	0.000	2.50E-03	**0.00E+00**
20	Off-gas/H2 Recombiner (BWR)	XX	1	1	0	2	0.000	4.40E-02	**0.00E+00**
21	Pumps	XX	1	1	0	43	0.000	2.10E-02	**0.00E+00**
22	RPS MG Sets	XX	0	1	0	0	0.000	1.60E-03	**0.00E+00**
23a	Transformers (oil filled)	XX	1	1	0	0	0.000	9.90E-03	**0.00E+00**
23b	Transformers (dry)	XX	1	1	0	67	0.000	9.90E-03	**0.00E+00**
24	Transient fires caused by welding and cutting (Plant-Wide)	XX	1	1	1	78	0.013	4.90E-03	**6.28E-05**
25	Transients (Plant-Wide)	XX	1	1	1	78	0.013	9.90E-03	**1.27E-04**
26	Ventilation Subsystems	XX	1	1	0	26	0.000	7.40E-03	**0.00E+00**
27	Transformer - Catastrophic	TY	0	1	0	9	0.000	6.00E-03	**0.00E+00**
28	Transformer - Non Catastrophic	TY	0	1	0	8	0.000	1.20E-02	**0.00E+00**
29	Yard Transformers (others)	TY	0	1	0	1	0.000	2.20E-03	**0.00E+00**
30	Boiler	TB	0	1	0	2	0.000	1.10E-03	**0.00E+00**
31	Cable Fires caused by welding and cutting (Turbine Building)	TB	0	1	0	224	0.000	1.60E-03	**0.00E+00**
32	Main Feedwater Pumps	TB	1	1	0	8	0.000	1.30E-02	**0.00E+00**
33	Turbine Generator Excitor	TB	0	1	0	1	0.000	3.90E-03	**0.00E+00**
34	Turbine Generator Hydrogen	TB	0	1	0	1	0.000	6.50E-03	**0.00E+00**
35	Turbine Generator Oil	TB	0	1	0	1	0.000	9.50E-03	**0.00E+00**
36	Transient fires caused by welding and cutting (Turbine Building)	TB	0	1	0	17	0.000	8.20E-03	**0.00E+00**
37	Transients (Turbine Building)	TB	0	1	0	17	0.000	8.50E-03	**0.00E+00**
Compartment Fire Frequency (FL)			**5.44E-03**						
Notes:									
(A) Number of Ignition Sources in Compartment									
(B) Total Number of Ignition Sources in Selected Plant Location or in Plant for Plant Wide Components									
*Ignition Source Frequency: FIF = WFL*WFIS*FF*									
Compartment Fire Frequency: FL = SUM(FIF)									

Table 12A-78

F39263 - Fire Compartment Ignition Source Data Sheet (ISDS)

Compartment Description									
	Fire Area		Fire Area F39263						
	Fire Compartment		F39263	ADG Electrical & Control Equipment room A					
Compartment Fire Ignition Frequency									
Step 1.1	Plant Location ID		XX						
	Plant Location Description		Plant-Wide						
Step 1.2	Location Weighting Factor (WFL)		1.00E+00	Plant Location					
	Location Weighting Factor (WFL)		1.00E+00	Plant Wide Components					
Compartment Ignition Sources		Plant	App. to	Weighting	Sources in	Sources in	Weighting	Fire	**Ignition Source**
(FIF)		Location	This Area	Factor	Compartment	Plant Location	Factor	Frequency	**Frequency**
Bin #	Ignition Source	L	APP	WFL	(A)	(B)	WFIS=(A)/(B)	(FF)	**(FIF)**
01	Batteries	BR	1	1	0	21	0.000	7.50E-04	**0.00E+00**
02	Reactor Coolant Pump	COP	0	1	0	0	0.000	6.10E-03	**0.00E+00**
03	Transients and Hotwork	COP	0	1	0	0	0.000	2.00E-03	**0.00E+00**
04	Main Control Board	CR	0	1	0	0	0.000	2.50E-03	**0.00E+00**
05	Cable Fires caused by welding and cutting (Cntrl/Aux/Rx Building)	CAR	0	1	0	1166	0.000	1.60E-03	**0.00E+00**
06	Transient fires caused by welding and cutting (Cntrl/Aux/Rx Building)	CAR	0	1	0	53	0.000	9.70E-03	**0.00E+00**
07	Transients (Cntrl/Aux/Rx Building)	CAR	0	1	0	53	0.000	3.90E-03	**0.00E+00**
08	Diesel Generators	DGR	1	1	0	4	0.000	2.10E-02	**0.00E+00**
09	Air Compressors	XX	1	1	0	4	0.000	2.40E-03	**0.00E+00**
10	Battery Chargers	XX	1	1	0	15	0.000	1.80E-03	**0.00E+00**
11	Cable Fires caused by welding and cutting (Plant-Wide)	XX	1	1	0	430	0.000	2.00E-03	**0.00E+00**
12	Cable Run	XX	1	1	0	1820	0.000	4.40E-03	**0.00E+00**
13	Dryers	XX	1	1	0	2	0.000	2.60E-03	**0.00E+00**
14	Electric Motors	XX	1	1	0	8	0.000	4.60E-03	**0.00E+00**
15	Electrical Cabinets	XX	1	1	3	530	0.006	4.50E-02	**2.55E-04**
16	High Energy Arcing Faults	XX	1	1	1	77	0.013	1.50E-03	**1.95E-05**
17	Hydrogen Tanks	XX	1	1	0	2	0.000	1.70E-03	**0.00E+00**
18	Junction Boxes	XX	1	1	0	1820	0.000	1.90E-03	**0.00E+00**
19	Misc. Hydrogen Fires	XX	1	1	0	0	0.000	2.50E-03	**0.00E+00**
20	Off-gas/H2 Recombiner (BWR)	XX	1	1	0	2	0.000	4.40E-02	**0.00E+00**
21	Pumps	XX	1	1	0	43	0.000	2.10E-02	**0.00E+00**
22	RPS MG Sets	XX	0	1	0	0	0.000	1.60E-03	**0.00E+00**
23a	Transformers (oil filled)	XX	1	1	0	0	0.000	9.90E-03	**0.00E+00**
23b	Transformers (dry)	XX	1	1	0	67	0.000	9.90E-03	**0.00E+00**
24	Transient fires caused by welding and cutting (Plant-Wide)	XX	1	1	1	78	0.013	4.90E-03	**6.28E-05**
25	Transients (Plant-Wide)	XX	1	1	1	78	0.013	9.90E-03	**1.27E-04**
26	Ventilation Subsystems	XX	1	1	0	26	0.000	7.40E-03	**0.00E+00**
27	Transformer - Catastrophic	TY	0	1	0	9	0.000	6.00E-03	**0.00E+00**
28	Transformer - Non Catastrophic	TY	0	1	0	8	0.000	1.20E-02	**0.00E+00**
29	Yard Transformers (others)	TY	0	1	0	1	0.000	2.20E-03	**0.00E+00**
30	Boiler	TB	0	1	0	2	0.000	1.10E-03	**0.00E+00**
31	Cable Fires caused by welding and cutting (Turbine Building)	TB	0	1	0	224	0.000	1.60E-03	**0.00E+00**
32	Main Feedwater Pumps	TB	1	1	0	8	0.000	1.30E-02	**0.00E+00**
33	Turbine Generator Excitor	TB	0	1	0	1	0.000	3.90E-03	**0.00E+00**
34	Turbine Generator Hydrogen	TB	0	1	0	1	0.000	6.50E-03	**0.00E+00**
35	Turbine Generator Oil	TB	0	1	0	1	0.000	9.50E-03	**0.00E+00**
36	Transient fires caused by welding and cutting (Turbine Building)	TB	0	1	0	17	0.000	8.20E-03	**0.00E+00**
37	Transients (Turbine Building)	TB	0	1	0	17	0.000	8.50E-03	**0.00E+00**
Compartment Fire Frequency (FL)			**4.64E-04**						
Notes:									
(A) Number of Ignition Sources in Compartment									
(B) Total Number of Ignition Sources in Selected Plant Location or in Plant for Plant Wide Components									
*Ignition Source Frequency: FIF = WFL*WFIS*FF*									
Compartment Fire Frequency: FL = SUM(FIF)									

Table 12A-79

FSWYD - Fire Compartment Ignition Source Data Sheet (ISDS)

Compartment Description									
	Fire Area		Fire Area FSWYD						
	Fire Compartment		FSWYD	Switchyard (assumed)					
Compartment Fire Ignition Frequency									
Step 1.1	Plant Location ID		XX						
	Plant Location Description		Plant-Wide						
Step 1.2	Location Weighting Factor (WFL)		1.00E+00	Plant Location					
	Location Weighting Factor (WFL)		1.00E+00	Plant Wide Components					
Compartment Ignition Sources		Plant	App. to	Weighting	Sources in	Sources in	Weighting	Fire	**Ignition Source**
(FIF)		Location	This Area	Factor	Compartment	Plant Location	Factor	Frequency	**Frequency**
Bin #	Ignition Source	L	APP	WFL	(A)	(B)	WFIS=(A)/(B)	(FF)	**(FIF)**
01	Batteries	BR	1	1	0	21	0.000	7.50E-04	**0.00E+00**
02	Reactor Coolant Pump	COP	0	1	0	0	0.000	6.10E-03	**0.00E+00**
03	Transients and Hotwork	COP	0	1	0	0	0.000	2.00E-03	**0.00E+00**
04	Main Control Board	CR	0	1	0	0	0.000	2.50E-03	**0.00E+00**
05	Cable Fires caused by welding and cutting (Cntrl/Aux/Rx Building)	CAR	0	1	0	1166	0.000	1.60E-03	**0.00E+00**
06	Transient fires caused by welding and cutting (Cntrl/Aux/Rx Building)	CAR	0	1	0	53	0.000	9.70E-03	**0.00E+00**
07	Transients (Cntrl/Aux/Rx Building)	CAR	0	1	0	53	0.000	3.90E-03	**0.00E+00**
08	Diesel Generators	DGR	1	1	0	4	0.000	2.10E-02	**0.00E+00**
09	Air Compressors	XX	1	1	0	4	0.000	2.40E-03	**0.00E+00**
10	Battery Chargers	XX	1	1	0	15	0.000	1.80E-03	**0.00E+00**
11	Cable Fires caused by welding and cutting (Plant-Wide)	XX	1	1	0	430	0.000	2.00E-03	**0.00E+00**
12	Cable Run	XX	1	1	0	1820	0.000	4.40E-03	**0.00E+00**
13	Dryers	XX	1	1	0	2	0.000	2.60E-03	**0.00E+00**
14	Electric Motors	XX	1	1	0	8	0.000	4.60E-03	**0.00E+00**
15	Electrical Cabinets	XX	1	1	0	530	0.000	4.50E-02	**0.00E+00**
16	High Energy Arcing Faults	XX	1	1	0	77	0.000	1.50E-03	**0.00E+00**
17	Hydrogen Tanks	XX	1	1	0	2	0.000	1.70E-03	**0.00E+00**
18	Junction Boxes	XX	1	1	0	1820	0.000	1.90E-03	**0.00E+00**
19	Misc. Hydrogen Fires	XX	1	1	0	0	0.000	2.50E-03	**0.00E+00**
20	Off-gas/H2 Recombiner (BWR)	XX	1	1	0	2	0.000	4.40E-02	**0.00E+00**
21	Pumps	XX	1	1	0	43	0.000	2.10E-02	**0.00E+00**
22	RPS MG Sets	XX	0	1	0	0	0.000	1.60E-03	**0.00E+00**
23a	Transformers (oil filled)	XX	1	1	0	0	0.000	9.90E-03	**0.00E+00**
23b	Transformers (dry)	XX	1	1	0	67	0.000	9.90E-03	**0.00E+00**
24	Transient fires caused by welding and cutting (Plant-Wide)	XX	1	1	0	78	0.000	4.90E-03	**0.00E+00**
25	Transients (Plant-Wide)	XX	1	1	0	78	0.000	9.90E-03	**0.00E+00**
26	Ventilation Subsystems	XX	1	1	0	26	0.000	7.40E-03	**0.00E+00**
27	Transformer - Catastrophic	TY	0	1	0	9	0.000	6.00E-03	**0.00E+00**
28	Transformer - Non Catastrophic	TY	0	1	0	8	0.000	1.20E-02	**0.00E+00**
29	Yard Transformers (others)	TY	0	1	0	1	0.000	2.20E-03	**0.00E+00**
30	Boiler	TB	0	1	0	2	0.000	1.10E-03	**0.00E+00**
31	Cable Fires caused by welding and cutting (Turbine Building)	TB	0	1	0	224	0.000	1.60E-03	**0.00E+00**
32	Main Feedwater Pumps	TB	1	1	0	8	0.000	1.30E-02	**0.00E+00**
33	Turbine Generator Excitor	TB	0	1	0	1	0.000	3.90E-03	**0.00E+00**
34	Turbine Generator Hydrogen	TB	0	1	0	1	0.000	6.50E-03	**0.00E+00**
35	Turbine Generator Oil	TB	0	1	0	1	0.000	9.50E-03	**0.00E+00**
36	Transient fires caused by welding and cutting (Turbine Building)	TB	0	1	0	17	0.000	8.20E-03	**0.00E+00**
37	Transients (Turbine Building)	TB	0	1	0	17	0.000	8.50E-03	**0.00E+00**
Compartment Fire Frequency (FL)			**1.80E-02**	<= Special considerations: Not calculated from the sources but based on RES/OERAB/S02-01 Table ES-1.					
Notes:									
(A) Number of Ignition Sources in Compartment									
(B) Total Number of Ignition Sources in Selected Plant Location or in Plant for Plant Wide Components									
*Ignition Source Frequency: FIF = WFL*WFIS*FF*									
Compartment Fire Frequency: FL = SUM(FIF)									

13 PROBABILISTIC FLOOD ANALYSIS

Contents

13 PROBABILISTIC FLOOD ANALYSIS 13.1-1
13.1 INTRODUCTION 13.1-1
13.2 METHODOLOGY 13.2-1
13.2.1 Assumptions 13.2-1
13.3 IDENTIFICATION OF FLOOD SOURCES 13.3-1
13.4 DEVELOPMENT OF FLOODING SCENARIOS 13.4-1
13.5 FLOODING FREQUENCIES 13.5-1
13.5.1 At-Power Flooding Frequencies 13.5-1
13.5.2 Shutdown Flooding Frequencies 13.5-1
13.6 ANALYSIS OF FLOODING SCENARIOS 13.6-1
13.6.1 At-Power Flooding Scenarios 13.6-2
13.6.2 Shutdown Flooding Scenarios 13.6-2
13.7 RESULTS 13.7-1
13.8 INSIGHTS 13.8-1
13.9 CONCLUSIONS 13.9-1
13.10 REFERENCES 13.10-1

List of Tables

Table 13.3-1 Preliminary Flood Source Screening - Systems Excluded..... 13.3-3
Table 13.4-1 Flooding Scenario Screening –Systems for Potential Propagation..... 13.4-3
Table 13.4-2 Flooding Scenario Screening - Flood Mitigating Features 13.4-4
Table 13.4-3 Flood Scenario Screening – Sources, Components and Capacity 13.4-5
Table 13.5-1 Flooding Frequency - Rupture Group Failure Data 13.5-3
Table 13.6-1 Flooding Analysis – At-Power Flooding Frequenciesand CDF 13.6-3
Table 13.6-2 Flooding Analysis – Shutdown Flooding Scenarios CDF 13.6-7
Table 13.7-1 Results – Level 2 LRF 13.7-2
Table 13.7-2 Results - Internal Flooding At-Power Cutset Report 13.7-3
Table 13.7-3 Results - Internal Flooding Shutdown Cutset Report 13.7-43
Table 13.7-4 Results - Internal Flooding At-Power Importance Measure Report 13.7-83
Table 13.7-5 Results - Internal Flooding Shutdown Importance Measure Report..... 13.7-150

13 PROBABILISTIC FLOOD ANALYSIS

This section documents the internal flooding analysis of the ESBWR PRA.

13.1 INTRODUCTION

The objective of the ESBWR internal flood analysis is to identify and provide a quantitative assessment of the core damage frequency (CDF) and large release frequency (LRF) due to internal flood events. The flood analysis models potential flood vulnerabilities, in conjunction with random failures modeled as part of the internal events PRA. Through this process, flood vulnerabilities that could jeopardize core integrity and containment integrity are identified.

As part of the PRA internal flood analysis, floods to be considered include events caused by large leaks due to rupture or cracking of pipes, piping components, or water containers such as storage tanks. Consideration of flooding caused by the operation of fire protection equipment is also considered. Excluded from this flood analysis is flooding associated with spray because areas susceptible to spray damage will be avoided by moving the required equipment or pipe, or providing spray protection (Reference 13-4). Also excluded from this analysis is the flooding associated from external sources such as localized flooding events and intense weather events. These external flooding events are reasonably precluded from the ESBWR probabilistic flood analysis based on adherence to the design conditions set forth in the envelope of ESBWR standard plant site parameters of DCD, Tier 2, Chapter 2.

The scope of the flooding analysis includes both at-power and shutdown flood-induced accident scenarios and releases.

13.2 METHODOLOGY

The internal PRA flooding analysis is conducted by identifying and classifying potential flooding sources and events. Component location and data is compiled to generate a frequency of occurrence to represent the impact associated with each of the potential flooding events. In addition, an evaluation is performed to identify, screen and quantify specific plant impacts/failures associated with each flooding event. Finally, the ESBWR-specific flooding frequencies and plant impacts are applied to the PRA model to obtain CDF and LRF results. For the Revision 4 ESBWR Flooding PRA model development, the following tasks were performed:

- Identification of Flood Sources
- Development of Flooding Scenarios
- Development of Flooding Frequencies
- Analysis of Flooding Scenarios

The internal PRA flooding analysis is based on the design basis for the ESBWR structures, components, equipment and systems. Critical to the flooding analysis is the location of these features and their interaction with other ESBWR structures, components, equipment and systems. The current list of system components and location of equipment is assumed based on the current design and plant layout drawings. The changes to Revision 4 of the ESBWR PRA flooding analysis include the addition of more detailed modeling of the instrument and control systems and modifications to the site structures housing PRA components.

The development of ESBWR-specific flooding scenarios requires a detailed analysis of data including plant component location, system capacity and potential failure mechanisms. Following the identification of potential flooding scenarios, a characteristic scenario is selected as representative of flood areas and subject to quantitative analysis.

In order to develop the severity and impact of potential flooding scenarios, data is collected from industry sources (Reference 13-1) for the ESBWR equipment and system components. Failure data for consideration in the flooding analysis includes piping runs, pumps, valves, tanks, heat exchangers, and circulating water expansion joints. These failure rates in combination with types and capacity of system components located within specific flood zones are used to develop the flooding frequencies. Flooding frequencies for both large break and small leak scenarios are developed for each flooding scenario.

Finally, the flood scenarios for each flood area are quantified to calculate a probabilistic risk value and summed to provide an overall risk analysis for the ESBWR.

13.2.1 Assumptions

The assumptions listed below are used in support of the ESBWR flooding analysis.

(1) Flooding resulting from component ruptures is considered in this analysis.

(2) For each tank rupture, the entire tank inventory is drained.

(3) Non-qualified submerging equipment (motors or solenoids for valves, control cabinets and circuitry) is assumed to fail if the water level in the flood zone reaches a level of 1 foot above floor elevation.

(4) If equipment is failed, it is assumed the equipment is failed at the start of the flood.

(5) The expected effect of flooding electrical equipment such as motor control centers, electrical cabinets, and terminal boxes, is a short to ground, removing power from the loads served by the component. This analysis addresses all such failures of electrical equipment as ground shorts.

(6) Motor-operated valves (MOVs) require the application of current to the motor to change the valve position. Without power, the valve will remain in its current position. Flooding and/or spraying of a motor-operated valve will therefore cause the valve to fail as is.

(7) Passive components, such as check valves, pipes, and tanks are not considered to be vulnerable to flooding effects because of the passive nature of the components.

(8) Flooding has no effect on test and maintenance unavailability. Additional testing and maintenance may be required after a flood. Prior to and during a flood, the unavailability of equipment from test and maintenance is unaffected by flooding.

(9) Flooding has no effect on common cause failures.

(10) Water collecting in a stairwell or propagating into a stairwell preferentially continues to travel down the stairwell as opposed to propagating under a door adjacent to the stairwell.

(11) The mission time of the active equipment credited in the flooding risk analysis is 24 hours. This is the same as the internal events PRA.

(12) Concurrent flooding events from different sources are not considered in the flooding analysis.

(13) Components that are environmentally qualified inside containment are considered to be invulnerable to the effects of flooding because they are qualified for a post-LOCA environment inside containment. Environmentally qualified equipment outside containment may not be qualified to as severe an environment and is considered vulnerable to flooding.

(14) Insulation properties are not lost at any point of cable routing and interaction with water can only occur at termination points, except environmentally qualified termination points inside containment.

(15) The internal flooding analysis uses the same systemic success criteria as used in the internal events PRA. The shutdown flooding analysis uses the same systemic success criteria as used in the shutdown PRA.

(16) Electrical connections in the termination boxes on the containment wall are adequately protected to prevent flood-induced failure.

(17) The solenoid valve associated with an air-operated valve is located in the vicinity of the air-operated valve.

(18) Fire doors are not watertight.

(19) Only concrete walls are considered flood barriers. Concrete walls are assumed to be capable of withstanding the expected maximum flood loading and are assumed to remain intact throughout a flooding event.

(20) Electrical circuit fault protection has been designed to provide protection for plant electric circuits via protective relaying, circuit breakers, and fuses. Therefore, loss of a component due to flooding will not result in the loss of the bus that supplies power to the affected component.

(21) For floor drains, appropriate precautions such as check valves, back flow preventers, and siphon breaks are assumed to prevent back flow and any potential flooding. Because detail routing of the drain system is not available, propagation of flooding through the drain system via failed check valves is not considered.

(22) Doors that connect the Control and Reactor Buildings with the Electrical Building galleries are watertight, for flooding of the galleries up to the ground level elevation. For the flooding analysis, the watertight doors are normally closed at power. Opening of these doors would generate an alarm in the Control Room, and procedures would direct their immediate closure upon receipt of an alarm.

(23) The operation of the components located in Containment would not be affected in the event of a LOCA or if the Drywell was flooded to a level equivalent to the level of the suppression pool.

(24) The opening of the hatches, which communicate the Containment with others buildings, would be carried out in Mode 5, Mode 5 Open and Mode 6-Unflooded.

(25) During shutdown, manual and automatic depressurization (ADS) of the vessel are available while the vessel head is in place.

(26) The actuation of Gravity Driven Cooling System (GDCS) due to a Reactor Pressure Vessel (RPV) Level 1 signal is available during the entire shutdown period.

(27) Dry pipe systems (such as a pre-action Fire Protection System) are not modeled as flood sources due to the low frequency of a failure of the dry pipe coincident with spurious opening of the actuation valve.

(28) Flooding in the containment during shutdown will not affect Isolation Condenser System components or the DPVs because these components are located relatively high in the containment.

(29) Equipment located in the yard is not considered susceptible to internal flooding damage.

(30) Human induced mechanisms such as overfilling tanks or diversion of flow created by maintenance are not applicable since operating procedures have not been developed, maintenance procedures have not been developed, frequency of maintenance and duration of maintenance have not been determined.

(31) Other events which could result in a release into a flood area based on plant experience are not applicable since there is no ESBWR plant experience.

(32) The flood volumes retained by the drain system is not credited in the flooding analysis for large flooding scenarios. Therefore, the capacity of the drain system has not been estimated.

(33) The amount of water retained by sumps, berms, dikes, and curbs is assumed to be negligible. This is conservative since retained water would provide additional time for flooding response.

(34) Flooding initiator frequencies remain constant over time.

(35) Among the plant buildings, flooding frequency is the same for the same equipment type, regardless of difference in the quantity and characteristics of the equipment type that may exist among the plant.

(36) Flooding scenarios in the steam tunnel are assumed to flow to the Turbine Building instead of back to the Reactor Building. This propagation pathway is based on the flooding methodology that floodwater will preferentially migrate to a lower elevation. In addition, propagation pathways from the steam tunnel to the reactor building are limited to two personnel and reduced equipment access doors.

13.3 IDENTIFICATION OF FLOOD SOURCES

A preliminary screening of flood sources was performed on all systems for the ESBWR. The screening removed systems not considered to be flood sources from further consideration. After the general screening, a more detailed review of the remaining systems was performed. This review included the consideration of system volumes connected or available to each ESBWR system. Estimates of system volume was conservatively assumed to be the greatest volume regardless of limiting controls and/or functions. If the estimated volume of the system was not sufficient to cause equipment failure (flood resulting in level equal to one foot above floor elevation), the system was screened from further consideration. Where surge tanks were available, the volume of the surge tank was used as the volume of the system available for flooding. Once the surge tank empties, it is expected the pumps will trip on low net positive suction head (NPSH). In addition, a review of the flood sources was performed to identify flood sources not available at shutdown. The screening results for the flood sources to be excluded from the ESBWR flooding analysis are provided in Table 13.3-1. The ESBWR systems considered as potential flood sources for at-power operations include:

- Nuclear Boiler System (NBS, B21),
- Isolation Condenser System (ICS, B32),
- Control Rod Drive System (CRDS, C12),
- Standby Liquid Control System (SLCS, C41),
- Fuel and Auxiliary Pools Cooling System (FAPCS, G21),
- Reactor Water Cleanup and Shutdown Cooling System (RWCU/SDCS, G31),
- Resin Transfer System (RTS, K15),
- Turbine Main Steam System (TMSS, N11),
- Condensate and Feedwater System (C&FS, N21),
- Heater Drain and Vent System (HDVS, N22),
- Condensate Purification System (CPS, N25),
- Moisture Separator Reheater System (MSRS, N35),
- Extraction Steam System (ESS, N36),
- Circulating Water System (CWS, N71),
- Make Up Water System (MWS, P10),
- Condensate Storage and Transfer System (CS&TS, P30),
- Plant Service Water System (PSWS, P41),
- Diesel Generator (DG, R21),
- Fire Protection System (FPS, U43),
- Station Water System (SWS, Y41), and

- Aux Boiler Oil Storage and Transfer System (OS&TS, Y52).

Certain ESBWR systems that are located inside containment and have the potential to be considered in the flooding analysis as potential flood sources have been excluded from the at-power flooding analysis. These flooding scenarios associated with these systems are those in which a break would cause a loss of coolant accident (LOCA). LOCA scenarios in containment are already modeled in the internal events PRA analysis and as such are not analyzed as part of the internal flooding analysis. Therefore, flooding scenarios in containment are not analyzed in the at-power operations internal flooding analysis.

The plant systems considered as potential flood sources during shutdown operations include:

- Nuclear Boiler System (NBS, B21),
- Isolation Condenser System (ICS, B32),
- Control Rod Drive System (CRDS, C12),
- Standby Liquid Control System (SLCS, C41),
- Gravity Driven Cooling System (GDCS, E50),
- Fuel and Auxiliary Pools Cooling System (FAPCS, G31),
- Reactor Water Cleanup and Shutdown Cooling System (RWCU/SDCS, G31),
- Resin Transfer System (RTS, K15),
- Condensate Purification System (CPS, N25),
- Make Up Water System (MWS, P10),
- Condensate Storage and Transfer System (CS&TS, P30),
- Plant Service Water System (PSWS, P41),
- Diesel Generator (DG, R21),
- Fire Protection System (FPS, U43),
- Station Water System (SWS, Y41), and
- Aux Boiler Oil Storage and Transfer System (OS&TS, Y52).

Breaks in the RWCU/SDCS drain lines from the reactor vessel inside containment are already modeled in the shutdown PRA (Section 16) and are not analyzed as part of the internal flooding analysis.

Table 13.3-1

Preliminary Flood Source Screening - Systems Excluded

SYSTEM CODE	SYSTEM ACRONYM	SYSTEM NAME	REASON EXCLUDED	CAPACITY OF SOURCE (gal)
B11	RPVS	Reactor Pressure Vessel System	Analyzed as Excessive LOCA in Section 2	
C11	RC&IS	Rod Control and Information System	Dry System	
C21	LD&IS	Leak Detection and Isolation System	Dry System	
C31	FWCS	Feedwater Control System	Dry System	
C51	NMS	Neutron Monitoring System	Dry System	
C61	RSS	Remote Shutdown System	Dry System	
C62	N-DCIS	Nonsafety DCIS	Dry System	
C63	Q-DCIS	Safety Related DCIS	Dry System	
C71	RPS	Reactor Protection System	Dry System	
C72	DPS	Diverse Protection System	Dry System	
C74	SSLC	Safety System Logic and Control	Dry System	
C82	PAS	Plant Automation System	Dry System	
C85	SB&PCS	Steam Bypass and Pressure Control System	Dry System	
C93	PSS	Plant Simulator System	Dry System	
D11	PRMS	Process Radiation Monitoring System	Dry System	
D21	ARMS	Area Radiation Monitoring System	Dry System	
F11	FSE	Fuel Servicing Equipment	Dry System	
F12	MSE	Miscellaneous Servicing Equipment	Dry System	
F13	RPVSE	Reactor Pressure Vessel Servicing Equipment	Dry System	
F14	RPVISE	RPV Internal Servicing Equipment	Dry System	
F15	RFE	Refueling Equipment	Dry System	
F16	FSR	Fuel Storage Racks	Dry System	
F17		Under-RPV Servicing Equipment	Dry System	
F21	CRDME	CRD Maintenance Equipment	Dry System	
F32	FCCE	Fuel Cask Cleaning Equipment	Dry System	
F41	PS&TE	Plant Startup and Test Equipment	Dry System	
F42	FTS	Fuel Transfer System	Dry System at Power	
H11	MCRP	Main Control Room (MCR) Panels	Dry System	
H12	MCRB	Main Control Room Back Room Panels	Dry System	
H14	RWCP	Radwaste Control Room Panels	Dry System	

Table 13.3-1

Preliminary Flood Source Screening - Systems Excluded

SYSTEM CODE	SYSTEM ACRONYM	SYSTEM NAME	REASON EXCLUDED	CAPACITY OF SOURCE (gal)
H21	LCPR	Local Panels and Racks	Dry System	
J10	CFS	Core & Fuel Services	Dry System	
J11	FUEL	Nuclear Fuel	Dry System	
J12	CHAN	Fuel Channel	Dry System	
K10	LWMS	Liquid Waste Management System	Dry System during normal operation	
K20	SWMS	Solid Waste Management System	Dry System	
K30	OGS	Offgas System	Dry System	
N31	TURB	Main Turbine	Subsumed by Turbine Bldg Analysis	
N32	TGCS	Turbine Generator Control System	Dry System	
N33	TGSS	Turbine Gland Seal System	Subsumed by Turbine Bldg Analysis	
N34	TLOS	Turbine Lube Oil System	Subsumed by Turbine Bldg Analysis	
N37	TBS	Turbine Bypass System	Dry System during normal operation	
N38	TH	Turbine Hydraulics	Subsumed by Turbine Bldg Analysis	
N39	TASS	Turbine Auxiliary Steam System	Subsumed by Turbine Bldg Analysis	
N41	GEN	Generator	Dry System	
N42	HGCS	Hydrogen Gas Control System	Dry System	
N43	SCWS	Stator Cooling Water System	Subsumed by Turbine Bldg Analysis	
N44	GLSOS	Generator Lube and Seal Oil System	Subsumed by Turbine Bldg Analysis	
N45	H2&CO2	Hydrogen & Carbon Dioxide Bulk Gas Storage	Dry System	
N51	GES	Generator Excitation System	Dry System	
N61	CDSR	Main Condenser and Auxiliaries	Subsumed by Turbine Bldg Analysis	

Table 13.3-1

Preliminary Flood Source Screening - Systems Excluded

SYSTEM CODE	SYSTEM ACRONYM	SYSTEM NAME	REASON EXCLUDED	CAPACITY OF SOURCE (gal)
P21A	RCCWSA	Reactor Component Cooling Water System A	Insufficient Volume	4227
P21B	RCCWSB	Reactor Component Cooling Water System B	Insufficient Volume	4227
P22	TCCWS	Turbine Component Cooling Water System	Insufficient Volume	4227
P25	CWS	BOP Chilled Water System	Insufficient Volume	4227
P25A	CWSA	NI Chilled Water System A	Insufficient Volume	4227
P25B	CWSB	NI Chilled Water System B	Insufficient Volume	4227
P32	OIS	Oxygen Injection System	Dry System	
P33	PSS	Process Sampling System	Leakage within capacity of sump pumps	
P51	SAS	Service Air System	Dry System	
P52	IAS	Instrument Air System	Dry System	
P54	HPNSS	High Pressure Nitrogen Supply System	Dry System	
P62	ABS	Auxiliary Boiler System	Insufficient Volume	5000
P73	HWCS	Hydrogen Water Chemistry System	Subsumed by Turbine Bldg Analysis	
P74	ZNIS	Zinc Injection System	Subsumed by Turbine Bldg Analysis	
R10	EPDS	Electric Power Distribution System	Dry System	
R11	MVDS	Medium Voltage Distribution System	Dry System	
R12	LVDS	Low Voltage Distribution System	Dry System	
R13	UAC	Uninterruptible AC Power Supply	Dry System	
R14	ICP	Instrumentation and Control Power Supply	Dry System	
R15	LSP	Lighting and Servicing Power Supply	Dry System	
R16	DC	Direct Current Power Supply	Dry System	
R31	RCWY	Raceway System	Dry System	
R41	GND	Plant Grounding System	Dry System	
R51		Communication System	Dry System	
S21	SWYD	Switchyard	Dry System	
T10	CONS	Containment System	Dry System	

Table 13.3-1

Preliminary Flood Source Screening - Systems Excluded

SYSTEM CODE	SYSTEM ACRONYM	SYSTEM NAME	REASON EXCLUDED	CAPACITY OF SOURCE (gal)
T11	CV	Containment Vessel	Dry System	
T12	COIST	Containment Internal Structures	Dry System	
T15	PCCS	Passive Containment Cooling System	In Containment and Pool	
T31	CIS	Containment Inerting System	Dry System	
T41	DCS	Drywell Cooling System	Dry System	
T62	CMS	Containment Monitoring System	Dry System	
T64	EMS	Environmental Monitoring System	Dry System	
U31	CH&E	Cranes, Hoists, and Elevators	Dry System	
U36	EBHVS	Electrical Building HVAC	Dry System	
U37	SBHVS	Service Building HVAC	Dry System	
U38	RWBHVS	Radwaste Building HVAC	Dry System	
U39	TBHVS	Turbine Building HVAC	Dry System	
U40	RBHVS	Reactor Building HVAC	Dry System	
U41	OBHVS	Other Building HVAC	Dry System	
U42	PWSWS	Potable Water and Sanitary Waste System	Subsumed by Turbine Bldg Analysis	
U44	SWDS	Sanitary Waste Discharge System	Dry System during normal operation	
U50	EFDS	Equipment and Floor Drain System	Dry System during normal operation	
U65	OBS	Other Building Structures	Dry System	
U66	ATS	Access Tunnel Structures	Dry System	
U67	RT	Radwaste Tunnel	Dry System	
U71	RB	Reactor Building Structure	Dry System	
U72	TB	Turbine Building Structure	Dry System	
U73	CB	Control Building Structure	Dry System	
U74	RW	Radwaste Building Structure	Dry System	
U75	SB	Service Building Structure	Dry System	
U77	CBHVS	Control Building HVAC	Dry System	
U78	CMCH	Cold Machine Shop	Dry System	
U80	EB	Electrical Building	Dry System	
U81	SMS	Seismic Monitoring System	Dry System	
U84	SWB	Service Water Building Structure	Dry System	
U85	SWBHVS	Service Water Building HVAC	Dry System	

Table 13.3-1

Preliminary Flood Source Screening - Systems Excluded

SYSTEM CODE	SYSTEM ACRONYM	SYSTEM NAME	REASON EXCLUDED	CAPACITY OF SOURCE (gal)
U91	ADM	Administration Building Structure	Dry System	
U93	TC	Training Center	Dry System	
U95	MCH	Hot Machine Shop	Dry System	
U97	FB	Fuel Building Structure	Dry System	
U98	FBHVS	Fuel Building HVAC System	Dry System	
U99	STACK	Stack	Dry System	
W12	I&DS	Intake and Discharge Structures	Dry System	
W24	CT	Cooling Tower	Outside	
W32	SCF	Screen Cleaning Facility	Dry System	
W33	SRR	Screens, Racks, & Rakes	Dry System	
W41	ISPS	Intake Structure Power Supply	Dry System	
Y12	ROAD	Roads and Walkways	Dry System	
Y21	PADS	Tank and Equipment Pads	Dry System	
Y46	CATH	Cathodic Protection System	Dry System	
Y47	MET	Meteorological Observation System	Dry System	
Y51	YDRN	Yard Miscellaneous Drain System	Outside	
Y53	CHEM	Chemical Storage and Transfer System	Subsumed by Turbine Bldg Analysis	
Y71	YPT	Yard Pipe Trench	Dry System	
Y72	DB	Ductbank	Dry System	
Y86	SSEC	Site Security	Dry System	

13.4 DEVELOPMENT OF FLOODING SCENARIOS

A flooding event may result in an initiating event and may also disable mitigating systems. As such, buildings containing mitigating equipment credited in the PRA accident sequence analysis, or equipment whose loss could cause an initiating event, are of interest to the ESBWR flooding analysis. In the development of ESBWR flooding scenarios, the analysis considers flood scenarios in the following buildings:

- Reactor Building (RB)
- Control Building (CB)
- Fuel Building (FB)
- Turbine Building (TB)
- Electrical Building (EB)
- Service Water Building (SF)
- Circulating Water Pumphouse (PH)
- Fire Water Service Complex (FWSC)
- Tunnels and Galleries connected with the buildings indicated above (CTA, CTB).

Floods in the remaining ESBWR buildings are not considered for in PRA risk analysis because flooding from these other areas cannot propagate to any of the above mentioned buildings.

The internal PRA flooding analysis is based on the design basis for the ESBWR structures, components, equipment and systems. Critical to the development of flooding scenarios is the location of these features and their interaction with other ESBWR structures, components, equipment and systems. The development of internal flooding scenarios is performed with the understanding that final piping configurations are not yet known. The current location of equipment is assumed based on the current design and plant layout drawings.

In some cases, even preliminary details of piping and equipment layout are not available. In these cases, it is assumed that the pipe routed to or from equipment would follow certain logical paths. For example, pipe routing is through pipe chases in battery rooms instead of routing the pipe through the battery room. Another logical path would be to assume the shortest path between locations as this reduces pipe and fabrication cost.

For the PRA internal flood analysis, buildings were divided into flood zones based on separation for flooding. Zones, not hydraulically coupled, are considered independent flood zones. For example, zones separated by walls and watertight doors are considered to be separate flood zones. Stairwells are considered part of the flood zone located at the bottom of the stairwell; it is assumed that there is no mechanism to retain the flood water at higher elevations of the stairwells. Flood zone drawings are provided in NEDE-33386, Rev. 1. Flood zone drawings have not been provided for buildings outside the GEH scope of work (e.g., flood zones PH and SF). In addition, flood zones must receive or maintain a sufficient capacity of flood water to result in impact to surrounding systems and/or components. When a system volume is less than the critical volume required to reach a flood height of 1 foot in the flood zone, the system can be

screened as a potential flood source within the flood zone. This additional screening was applied to the reactor building flood zone RB+3 and to containment flood zone RB-CNT.

Flooding propagation between flood zones is accounted for in the internal flooding analysis. Where propagation is likely, hydraulic conductivity between zones is included in the flooding analysis. However, the availability of certain design features may affect flood propagation and should also be considered as part the hydraulic conductivity between flood zones. Depending on the flood zones and design features, the following aspects are considered:

- Automatic flood detection systems,
- Automatic systems to terminate flooding,
- Watertight doors to prevent the progression of flooding,
- Walls which prevent progression of flooding (Only concrete walls are credited)
- Sump pumps, and
- Other design or construction characteristics that contribute to minimize the consequences of flooding.

Systems identified as sources of flooding propagation paths and considered for the ESBWR internal flooding are provided in Table 13.4-1 with features available to provide mitigation between flood zone are identified in Table 13.4-2.

A summary of the screening of flood zones is documented in Table 13.4-3. This table provides a list of ESBWR systems which have not been considered as potential flood sources, their reason for exclusion and estimated flood water capacity of the system. Flood zones not containing flood sources (see Section 13.3) or PRA equipment are screened from further analysis since these zones would not have no probabilistic impact.

Table 13.4-1

Flooding Scenario Screening –Systems for Potential Propagation

Flood Zone		System for Flood Propagation
AD-A		P25A, R21A, Y52A
AD-B		P25B, R21B, Y52B
AD-AT		R21A
AD-BT		R21B
CB-CR		P25A, P25B
CB-SW		U43
EB		R21A, R21B, U43.Y52A.Y52B
EB+1		R21A, R21B, U43
EB+3		P25A, P25B
FB-2A		G21
FB-3		G21, P21A, P21B, U43
FB+3		P25A, P25B
FB-P		G21, U43
FB-SW		U43
FW-1		G21, U43
FW-2		U43
PH1		N71, U43
RB-3		C12, G31A, G31B, P21A, P21B,P25A, P25B, P30
RB-3A		G21, G31A, G31B, P21A, P21B,P25A, P25B, U43
RB-3B		C12, G31A, G31B, P21A, P21B,P25A, P25B, P30, U43
RB-2A		C21, P21A, P21B, P30
RB-2B		G31A. G31B
RB-CNT		B21A,B21B, B32, C41, E50A, E50B, E50C, E50D, G21, G31A, G31B, P25A, P25B
RB+2		U43
RB+3		C41, G21, G31A, G31B, P10, P25A, P25B
RB+4-VA		B32
RB+4-VB		B32
RB+5		G21
RW		U43
SF		P10, P41A, ;41B, Y41
CTA		U43
CTB		U43
TB-1		K15, N21, N25, P10, P21A, P21B, P22, P25, P251, P25B, P30, P41A, P41B, U43
TB		N21, P10, P21A, P21B, P22, P25, P251, P25B, P41A, P41B, P74, U43
TB+1		N11, N21, N22, N35, N36, P10, P21A, P21B, P22, P25, P25A, P25B, U43
TB+2		N11, N21, N22, N35, N36, P10, P21A, P21B, P22, P25, P25A, P25B, U43
TB+3		N11, N21, N22, N35, P10, P21A, P21B, P22, P25, P25A, P25B
TB+4		P10, P21A, P21B, P25
TB-C		B21A, B21B, G31, N11, N21, N35, N36, N71, P10, P30
TB-SW		U43

Note: Propagation prior to screening on system volume.

Table 13.4-2

Flooding Scenario Screening - Flood Mitigating Features

Flood Area	Description	Flood Mitigating Features
RB-3	Reactor Building – Elev, -11500	Watertight doors
RB-3A	Reactor Building – Elev, -11500 – RWCU/SDC Train A	Watertight doors, sump pumps
RB-3B	Reactor Building – Elev, -11500 – RWCU/SDC Train B	Watertight doors, sump pumps
RB-1A	Reactor Building – Elev. –1000 – Electrical Equipment Room	Watertight doors
RB+3	Reactor Building – Elev. 17500	Equipment Hatch to Steam Tunnel
FB-3	Fuel Building – Elev. -11500	Watertight doors, sump pumps
CB-D1	Control Building Div. 1 DCIS Electrical Room and Chases	Watertight doors
CB-D2	Control Building Div. 2 DCIS Electrical Room	Watertight doors
CB-D3	Control Building Div. 3 DCIS Electrical Room and Chases	Watertight doors
CB-D4	Control Building Div. 4 DCIS Electrical Room	Watertight doors
CB-SW	Control Building Stairwells A&B	Watertight doors
CB-CR	Control Room	Watertight doors
TB-C	Turbine Building – Main Condenser	Watertight doors
TB-S	Turbine Building – Sampling Room B	Watertight doors
TB-1	Turbine Building – Elev. –1400 – Condensate System and Stairwells A, C, & D	Watertight doors
TB-SW	Turbine Building – Stairwell B	Watertight door
EB	Electrical Building – Elev. 4650 – Batteries and Diesel Generators	Watertight door

Table 13.4-3

Flood Scenario Screening – Sources, Components and Capacity

Flood_Zone	Description	Flood Sources(1)	PRA(2) Components	Screened	Vol_ (gal) 6"	Vol _(gal) 1'
AD-A	ANCILLARY DIESEL BUILDING – DIESEL GENERATOR A	YES	YES	NO	2700	5400
AD-AT	ANCILLARY DIESEL BUILDING – FUEL OIL TANK A	YES	YES	NO	2700	5400
AD-B	ANCILLARY DIESEL BUILDING – DIESEL GENERATOR B	YES	YES	NO	2700	5400
AD-BT	ANCILLARY DIESEL BUILDING – FUEL OIL TANK B	YES	YES	NO	2700	5400
CB-ND	CONTROL BUILDING NON-SAFETY ELECTRICAL ROOMS	NO	YES	YES	17662.4	35324.8
CB-CW	CONTROL BUILDING CHILLED WATER SYSTEM AND AHUS	NO	NO	YES	17662.4	35324.8
CB-SW	CONTROL BUILDING STAIRWELLS A & B	YES	YES	NO	6157.9	12315.8
CB-CR	CONTROL ROOM	NO	NO	YES	17662.4	35324.8
CB-D1	CONTROL BUILDING – DIV. 1 DCIS ELECTRICAL ROOM AND CHASES	NO	YES	YES	3011.3	6022.7
CB-D2	CONTROL BUILDING – DIV. 2 DCIS ELECTRICAL ROOM AND CHASES	NO	YES	YES	3295.9	6591.7
CB-D3	CONTROL BUILDING – DIV. 3 DCIS ELECTRICAL ROOM AND CHASES	NO	YES	YES	3011.3	6022.7
CB-D4	CONTROL BUILDING – DIV. 4 DCIS ELECTRICAL ROOM AND CHASES	NO	YES	YES	3281.8	6563.5
CTA	CONTROLLED PERSONNEL ACCESS TUNNEL A	YES	NO	NO	10991.8	21983.6
CTB	CONTROLLED PERSONNEL ACCESS TUNNEL B	YES	NO	NO	10991.8	21983.6
EB+327000	ELECTRICAL BUILDING – ELEV. 27000 – BATTERIES AND DIESEL GENERATORS	NO	NO	YES	26479.5	52959
EB	ELECTRICAL BUILDING – ELEV. 4650 – BATTERIES AND DIESEL GENERATORS	YES	YES	NO	50857.5	101715.1

Table 13.4-3

Flood Scenario Screening – Sources, Components and Capacity

Flood_Zone	Description	Flood Sources(1)	PRA(2) Components	Screened	Vol_ (gal) 6"	Vol _(gal) 1'
EB+1	ELECTRICAL BUILDING – ELEV. 9800 - BATTERIES AND DIESEL GENERATORS	YES	YES	NO	43333.4	86666.8
EB-A1	ELECTRICAL BUILDING – ELEV. 13900 - AHUS	NO	NO	YES	NA	NA
EB-A2	ELECTRICAL BUILDING – ELEV. 9800 - AHUS	NO	NO	YES	NA	NA
EB-C	ELECTRICAL BUILDING – CHASE	NO	NO	YES	NA	NA
EB-FPS	ELECTRICAL BUILDING – ELEV. 4650 – FIRE PROTECTION SYSTEM	NO	NO	YES	NA	NA
EB-TA	ELECTRICAL BUILDING – CHASE A	NO	NO	YES	NA	NA
EB-TB	ELECTRICAL BUILDING – CHASE B	NO	NO	YES	NA	NA
EB+2	ELECTRICAL BUILDING – ELEV. 18000 – BATTERIES AND DIESEL GENERATORS	NO	NO	YES	23282.2	46564.5
FB-C1	FUEL BUILDING COMMODITY CHASE 1	NO	NO	YES	NA	NA
FB+3	FUEL BUILDING – ELEV. 22500	NO	YES	YES	28223.2	56446.4
FB	FUEL BUILDING – ELEV, 4650	YES	YES	NO	30366.9	60733.8
FB-1	FUEL BUILDING –ELEV. -1000	NO	NO	YES	22572.4	45144.7
FB-3	FUEL BUILDING – ELEV, -11500	YES	YES	NO	24831.6	49663.1
FB-2	FUEL BUILDING – ELEV. -6400	NO	NO	YES	22597.7	45195.4
FB-2A	FUEL BUILDING - ELEV. –6400 – FAPCS VAULT	NO	NO	YES	NA	NA
FB-P	FUEL BUILDING FUEL POOL	YES	NO	NO	5383.2	10766.5
FPE	FIRE PUMPHOUSE ENCLOSURE	YES	YES	NO	4684.6	9369.2
PH	CIRCULATION WATER BUILDING - ALL	YES	YES	NO	16817.3	33634.6

Table 13.4-3

Flood Scenario Screening – Sources, Components and Capacity

Flood_Zone	Description	Flood Sources(1)	PRA(2) Components	Screened	Vol_ (gal) 6"	Vol _(gal) 1'
RB+2	REACTOR BUILDING – ELEV. 13750	YES	YES	NO	23149.8	46299.7
RB+3	REACTOR BUILDING – ELEV. 17500	YES	YES	NO	23772.4	47544.8
RB+5	REACTOR BUILDING – ELEV. 34000	YES	YES	NO	59607	119214.1
RB	REACTOR BUILDING – ELEV. 4650	NO	YES	YES	21885	43770
RB+1	REACTOR BUILDING – ELEV. 9060	NO	YES	YES	21885	43770
RB-1	REACTOR BUILDING – ELEV. -1000	NO	YES	YES	51111.1	102222.1
RB-1A	REACTOR BUILDING – ELEV. -1000	NO	NO	YES	NA	NA
RB+4-5A	REACTOR BUILDING – ELEV. 27000 – ICS/PCCS EXPANSION POOL 5A	NO	NO	YES	966.2	1932.4
RB+4-5B	REACTOR BUILDING – ELEV. 27000 – ICS/PCCS EXPANSION POOL 5B	NO	NO	YES	4169.1	8338.2
RB+4-5C	REACTOR BUILDING – ELEV. 27000 – ICS/PCCS EXPANSION POOL 5C	NO	NO	YES	5738.2	11476.3
RB-2	REACTOR BUILDING – ELEV. -6400	NO	YES	YES	23285.1	46570.1
RB+4-6A	REACTOR BUILDING – ELEV. 27000 – ICS/PCCS EXPANSION POOL 6A	NO	NO	YES	966.2	1932.4
RB+4-6B	REACTOR BUILDING – ELEV. 27000 – ICS/PCCS EXPANSION POOL 6B	NO	NO	YES	4169.1	8338.2
RB+4-6C	REACTOR BUILDING – ELEV. 27000 – ICS/PCCSEXPANSION POOL 6C	NO	NO	YES	5738.2	11476.3
RB-3A	REACTOR BUILDING – ELEV. –11500 RWCU/SDC TRAIN A	YES	YES	NO	19961	39922.1
RB-3B	REACTOR BUILDING – ELEV. –11500 RWCU/SDC TRAIN B	YES	YES	NO	20597.7	41195.3
RB-CNT	REACTOR BUILDING - CONTAINMENT	YES	YES	NO	NA	NA

Table 13.4-3

Flood Scenario Screening – Sources, Components and Capacity

Flood_Zone	Description	Flood Sources(1)	PRA(2) Components	Screened	Vol_ (gal) 6"	Vol _(gal) 1'
RB-G1	REACTOR BUILDING – ELEV. 17500 – GDCS POOL 1	NO	NO	YES	NA	NA
RB-G2	REACTOR BUILDING – ELEV. 17500 – GDCS POOL 2	NO	NO	YES	NA	NA
RB-G3	REACTOR BUILDING – ELEV. 17500 – GDCS POOL 3	NO	NO	YES	NA	NA
RB+4C	REACTOR BUILDING – ELEV. 27000 - BUFFER POOL	NO	NO	YES	4515.6	9031.2
RB-2A	REACTOR BUILDING – ELEV. –6400	YES	YES	NO	2645.1	5290.3
RB-2B	REACTOR BUILDING – ELEV. –6400	YES	YES	NO	2645.1	5290.3
RB+4A	REACTOR BUILDING – ELEV. 27000 – EQUIPMENT STORAGE POOL	NO	NO	YES	4673.3	9346.7
RB-3	REACTOR BUILDING – ELEV. -11500	YES	YES	NO	8000.2	16000.4
RB+4-3A	REACTOR BUILDING – ELEV. 27000 - ICS HEAT EXCHANGER ROOM A	NO	YES	YES	470.4	940.9
RB+4-3B	REACTOR BUILDING – ELEV. 27000 - ICSHEAT EXCHANGER ROOM B	NO	YES	YES	470.4	940.9
RB+4-3C	REACTOR BUILDING – ELEV. 27000 - ICSHEAT EXCHANGER ROOM C	NO	YES	YES	470.4	940.9
RB+4-3D	REACTOR BUILDING – ELEV. 27000 - ICSHEAT EXCHANGER ROOM D	NO	YES	YES	470.4	940.9
RB+4-4A	REACTOR BUILDING – ELEV. 27000 - PCCS HEAT EXCHANGER ROOM A	NO	YES	YES	712.7	1425.4
RB+4-4B	REACTOR BUILDING – ELEV. 27000 - PCCS HEAT EXCHANGER ROOM B	NO	YES	YES	712.7	1425.4
RB+4-4C	REACTOR BUILDING – ELEV. 27000 - PCCS HEAT EXCHANGER ROOM C	NO	YES	YES	712.7	1425.4

Table 13.4-3

Flood Scenario Screening – Sources, Components and Capacity

Flood_Zone	Description	Flood Sources(1)	PRA(2) Components	Screened	Vol_ (gal) 6"	Vol _(gal) 1'
RB+4-4D	REACTOR BUILDING – ELEV. 27000 - PCCS HEAT EXCHANGER ROOM D	NO	YES	YES	712.7	1425.4
RB+4-4E	REACTOR BUILDING – ELEV. 27000 – PCCS HEAT EXCHANGER ROOM E	NO	YES	YES	712.7	1425.4
RB+4-4F	REACTOR BUILDING – ELEV. 27000 - PCCS HEAT EXCHANGER ROOM F	NO	YES	YES	712.7	1425.4
RB+4B	REACTOR BUILDING – ELEV. 27000 – REACTOR WELL	NO	NO	YES	4191.6	8383.3
RB+4-VA	REACTOR BUILDING – ELEV. 27000 – ICS/PCCS VALVE ROOM A	YES	YES	NO	383.1	766.2
RB+4-VB	REACTOR BUILDING – ELEV. 27000 – ICS/PCCS VALVE ROOM B	YES	YES	NO	383.1	766.2
RB-SP	REACTOR BUILDING – ELEV. 4650 SUPRESSION POOL	NO	NO	YES	22501.9	45003.9
RW	RADWASTE BUILDING - ALL	YES	NO	NO	55899.9	111799.8
RWT	RADWASTE TUNNEL	NO	NO	YES	8245.3	16490.5
SF	SERVICE WATER BUILDING	YES	YES	NO	37113.6	74227.1
TB+1	TURBINE BUILDING – ELEV. 12000 – REACTOR FEED SYSTEM & AIR SYSTEMS	YES	YES	NO	181440.9	362881.8
TB+2	TURBINE BUILDING – BOP WATER CHILLER	YES	YES	NO	152181.1	304362.1
TB+3	TURBINE BUILDING - TURBINE	YES	NO	NO	181440.9	362881.8
TB+4	TURBINE BUILDING – SURGE TANKS	YES	YES	NO	181440.9	362881.8
TB	TURBINE BUILDING – Elev. 4650-Reactor Feed System	YES	YES	NO	181440.9	362881.8
TB-1	TURBINE BUILDING – Elev. –1400 Condensate System and Stairwells A, C & D	YES	YES	NO	170187.1	340374.2

Table 13.4-3

Flood Scenario Screening – Sources, Components and Capacity

Flood_Zone	Description	Flood Sources(1)	PRA(2) Components	Screened	Vol_ (gal) 6"	Vol _(gal) 1'
TB-C	Turbine Building – Main Condenser	YES	YES	NO	14648	29296
TB-S	TURBINE BUILDING – SAMPLING ROOM B	NO	NO	YES	NA	NA
TB-SW	TURBINE BUILDING – STAIRWELL B	YES	NO	NO	7324.1	14648.2
YARD	YARD(3)	YES	YES	YES	0	0

Notes:

(1) Flood sources sufficient to damage equipment modeled in the PRA

(2) PRA components which can be damaged by flooding and are modeled in the PRA

(3) PRA components in the Yard are not considered susceptible to internal flooding damage because of the area of the Yard.

13.5 FLOODING FREQUENCIES

The flooding sources considered in the internal flooding analysis include the piping, pumps, valves, tanks, heat exchangers, and circulating water expansion joints. Data was collected from a industry source providing failure frequency data for a list of rupture groups considered in the flooding analysis. The data used for the ESBWR flood analysis is shown in Table 13.5.1. As part of this data, the frequencies of piping leaks/breaks for both small and large failures are included. These failure frequencies for piping leaks are based on the in-service flow rates and are classified as either small, less than or equal to 50 gpm, or large, greater than 50 gpm. Based on this data, the piping failure data is independent of the pipe size. For flood zones within the RB and CB buildings, quantification of flooding impacts from small failures were not consider due to drain collection system designed to mitigate internal flooding between trains.

In developing the ESBWR frequencies of flood scenarios, the location of equipment is based on best available equipment location information. Using available information along with conservative assumptions, an estimated length of pipe for each flood zone is multiplied by a failure probability of pipe length for the given pipe type and size of leak. In addition to the piping contributions to the flood scenario frequencies, equipment containing potential flood sources also contribute to the overall flooding frequencies. These include pumps, valves, heat exchangers, tanks and expansion joints. All of the flood initiator contributions are summed to provide the initiating event frequency for each flood zone. Initiators are further divided by system and/or train impact. For example, an RWCU/SDC Train A pipe may break failing all the equipment in the zone. In addition to the equipment lost due to flooding, RWCU/SDC Train A equipment is lost. This is a different sequence than a pipe break in the CRD piping, which again will flood the equipment in the room, but now fails the CRD system instead of the RWCU/SDC Train A.

13.5.1 At-Power Flooding Frequencies

At-power flooding frequencies are included for analysis based on the following conditions:

(1) The failure of the system(s) to directly cause a reactor trip, OR

(2) The flooding caused by the failure fails equipment which leads to a reactor trip, OR

(3) PRA-related equipment would be expected to be affected.

13.5.2 Shutdown Flooding Frequencies

The postulated shutdown initiating events addressed for the internal events flooding will challenge:

(1) Decay Heat Removal (includes Loss of RWCU/SDC, Loss of Preferred Power, and Loss of all Service Water), or

(2) Reactor Coolant System Inventory Control (includes several postulated LOCAs during shutdown).

All initiating event frequencies for shutdown are obtained from the at-power frequencies. However, the shutdown frequencies are adjusted to account for the number of hours in each

operating mode and that the plant is assumed to be shutdown once every two years. The calculations for the shutdown initiating event frequencies are shown below.

Calculation of ESBWR - Flood Initiating Event Frequencies

Shutdown Flooding

Mode 5	Initiating Event Frequency	IE	occurrence/yr
	Total Operating Hours	8760	hrs
	Annual Number of Outages	0.5	yr
	Duration of Mode 5	192	hrs
	Mode 5 IE Frequency	0.011 IE	occurrence
Mode 5 Open	Initiating Event Frequency	IE	occurrence/yr
	Total Operating Hours	8760	hrs
	Annual Number of Outages	0.5	yr
	Duration of Mode 5 Open	48	hrs
	Mode 5 Open IE Frequency	0.0027 IE	occurrence
Mode 6 Unflooded	Initiating Event Frequency	IE	occurrence/yr
	Total Operating Hours	8760	hrs
	Annual Number of Outages	0.5	yr
	Duration of Mode 6 Unflooded	59	hrs
	Mode 5 IE Frequency	0.0034 IE	occurrence

Table 13.5-1

Flooding Frequency - Rupture Group Failure Data

Failure (Rupture Group)	Frequency		Component Failed (Component	Reference
	Small Rate	Large Rate		
SW	5.85E-06	1.17E-06	PIPE	13-1, Table 5-1
FP	2.15E-06	2.15E-07	PIPE	13-1, Table 5-1
SIR	2.15E-06	2.15E-07	PIPE	13-1, Table 5-1
CCW and CST	2.15E-06	2.15E-07	PIPE	13-1, Table 5-1
BWR FWC - CS Piping	2.15E-06	2.15E-07	PIPE	13-1, Table 5-1
BWR FWC - FAC Suscept Comp	2.15E-06	2.15E-07	PIPE	13-1, Table 5-1
BWR FW - SS Piping	2.15E-06	2.15E-07	PIPE	13-1, Table 5-1
Circ Water Piping	2.15E-06	2.15E-07	PIPE	13-1, Table 5-1
High Pressure Steam Piping	2.15E-06	2.15E-07	PIPE	13-1, Table 5-1
ACV	1.09E-04	7.65E-06	VALVE	13-1, Table 5-1 AOV
MOV	1.20E-04	8.35E-06	VALVE	13-1, Table 5-1 MOV
SOV	7.92E-05	5.54E-06	VALVE	13-1, Table 5-1 SOV
SRV	4.99E-05	3.75E-06	VALVE	13-2 with L=S*0.07 per 13-1
UV_	2.50E-04	1.75E-05	VALVE	13-1, Table 5-1 CKV
NMO	1.20E-04	8.35E-06	VALVE	13-1, Table 5-1 MOV
NPO	1.09E-04	7.65E-06	VALVE	13-1, Table 5-1 AOV
HOV	1.26E-04	8.74E-06	VALVE	13-1, Table 5-1 HOV
TNK	3.34E-04	2.33E-05	TANK	13-1, Table 5-1 TNK Press
HX_	4.24E-04	2.97E-05	HX	13-1, Table 5-1 HTX Shell
MP_	9.76E-04	6.83E-05	PUMP	13-1, Table 5-1 MDP

Table 13.5-1

Flooding Frequency - Rupture Group Failure Data

Failure (Rupture Group)	Frequency		Component Failed (Component	Reference
	Small Rate	Large Rate		
MPF	9.76E-04	6.83E-05	PUMP	13-1, Table 5-1 MDP
MPC	9.76E-04	6.83E-05	PUMP	13-1, Table 5-1 MDP
MPW	9.76E-04	6.83E-05	PUMP	13-1, Table 5-1 MDP
EDP	2.09E-03	1.46E-04	PUMP	13-1, Table 5-1 DDP
EJ	4.57E-04	3.04E-04	EXP JOINT	13-3 with S=0.6, L=0.4
SQV	7.92E-05	5.54E-06	VALVE	13-1, Table 5-1 SOV

13.6 ANALYSIS OF FLOODING SCENARIOS

Flooding initiating events are the starting point for flood-induced accident sequence analysis. The magnitude of the flood and the associated plant damage impact from the flood effects is used to determine the appropriate accident sequence analysis. The accident sequence analysis is further subdivided based on whether the plant is at-power or shutdown. No grouping of flooding scenarios is performed. The at-power CDF for each flooding scenario is obtained using the internal events L2 PRA model (discussed in Section 8) at a truncation of 1.0E-15 accompanied by the flooding initiator. From the L2 flooding results, the L1 flooding results were obtained by marking appropriate L2 flags and subsuming.

For the ESBWR PRA model, a flooding event initiator associated with the specific flooding scenario was added as an individual flooding initiator for quantification. This is done by the addition of a flag file that represents the flooding scenario and is used during the quantification. These flag files combines the failures associated with equipment located in the flood zone with any other system components associated with the system where the flooding event has occurred. For the EBSWR PRA flooding analysis, it has been conservatively assumed that if equipment is located in a flood zone, which is being flooded, the equipment is assumed to fail. The exception is containment where equipment located in the upper section of containment is not failed by flooding in containment. This is due in part to the equipment being located a minimum of about 18.2 m (60 feet) above the bottom of containment and a large volume of containment available for flooding below the equipment. The damage caused by the flood is manipulated through the use of a flooding flag file to set the basic event for the affected equipment to TRUE (failed). Other exceptions include fans and air handlers that are assumed to be installed in the roof and valves located in the steam tunnel. These components are located at a considerable elevation above the flood zone bottom and are not considered to be susceptible to flooding scenarios in those flood zones.

The shutdown CDF for each flood damage state is obtained via quantification of the shutdown PRA model (as discussed in Section 16) run at a truncation of 1.0E-15. Shutdown flooding quantification for the flooding analysis follow the same methodology as the at-power flooding using the same scenarios and employing individual flooding frequencies adjusted to reflect times for the shutdown modes, M5-G31 (Mode 5 loss of RWCU/SDCS), M5O-G31 (Mode 5 Open loss of RWCU/SDCS), and M6U-G31 (Mode 6 Unflooded loss of RWCU/SDCS). For the ESBWR flooding PRA risk analysis, shutdown Mode 6 Flooded is not considered since in this mode adequate water level is available above the core to provide cooling. The shutdown accident sequence structure for each flooding scenario was used and adjusted to include the appropriate equipment failures. Like the at-power scenarios, the damage caused by the flooding event is quantified through the use of flag files which set the basic event for the affected equipment to TRUE (failed), as appropriate.

The initiating basic event identifier uniquely identifies each flooding scenario. The first three characters – "%FL" identifies the basic event as a flooding initiating event. The next group of characters identify the flood zone being analyzed. . This is followed by a hyphen and the system causing the flooding with the train causing the flooding if applicable. P21A would be the "A" train of Reactor Component Cooling Water (P21). N71 would be the Circulating Water System. This is followed by an "_" then an "L" for a large flood greater than 50 gpm or an "S" for a small flood less than or equal to 50 gpm. For shutdown accident sequences, the event tree

is the branch in the shutdown top logic model used for the accident sequence. The designator for shutdown will be either "_M5", Mode 5 flood, "_M5O_", Mode 5 Containment Open, and "_M6U", Mode 6 Unflooded.

13.6.1 At-Power Flooding Scenarios

For postulated flood events occurring at-power, the flood initiating event and associated accident sequence logic is used to model the accident sequence progression. The calculated flood initiator frequency and associated equipment impacts are propagated through the general transient L1/L2 internal events accident sequence logic for the flood scenario. The component location information within the individual flood zones is provided in NEDE-33386 (Reference 13-5). Equipment located in the flood zone which is susceptible to flooding is failed by setting the equipment basic event to TRUE in a flag file used for quantification of the scenario.

No operator actions have been included in the internal events PRA for the purpose of isolating or mitigating the consequences of at-power flooding scenarios. Initiating flood frequencies used for at-power scenarios and their probability are shown in Table 13.6-1.

For several reasons, no engineering calculations are required to calculate the time for flooding events to reach susceptible equipment. First, timing for operator actions is not required for at-power flooding scenarios since no operator actions are used to isolate or mitigate the consequences of at-power flooding scenarios beyond those included in the internal events PRA. Second, if the equipment in the flood zone will be failed by the flood, the equipment is assumed to be failed from the start of the flood.

13.6.2 Shutdown Flooding Scenarios

For postulated flood events occurring during shutdown, the Mode 5 (M5), Mode 5 Open (M5O) and Mode 6 Unflooded (M6U) shutdown flood initiating event frequencies and associated accident sequence logics are used to model the accident sequence progression. The calculated flood initiator frequencies and associated equipment impacts are propagated through the shutdown events accident sequence logic for the flood scenario. NEDE-33386 (Reference 13-5) contains the equipment location information. Equipment located in the flood zone which is susceptible to flooding is failed by setting the equipment basic event to TRUE in a flag file used for quantification of the scenario.

The shutdown scenarios are all assumed to be bypass scenarios. Therefore, the shutdown CDF is equal to the containment bypass frequency. The shutdown flooding initiator frequencies and their contribution of shutdown flooding to releases was calculated and is provided in the summary Table 13.6-2. Since it has been conservatively assumed that every shutdown CDF leads to an early release, it is not necessary to review each flood scenario for applicability of the LRF analysis. Every flood scenario leads to the worst case LRF.

Table 13.6-1
Flooding Analysis – At-Power Flooding Frequenciesand CDF

At-Power Flooding Scenario	Initiating Event Frequency	CDF
AD-A-Y52A-S	1.08E-04	1.91E-13
AD-A-Y52A-L	1.08E-05	1.27E-14
AD-B-Y52B-S	1.08E-04	1.91E-13
AD-B-Y52B-L	1.08E-05	1.27E-14
AD-AT-R21A-S	1.31E-03	3.84E-12
AD-AT-R21A-L	9.16E-05	1.63E-13
AD-BT-R21B-S	9.76E-04	3.81E-12
AD-BT-R21B-L	6.83E-05	1.63E-13
CBSW-U43-L	4.73E-05	1.24E-13
CTA-U43-S	4.73E-04	2.84E-12
CTA-U43-L	4.73E-05	1.87E-13
CTB-U43-S	4.73E-04	2.84E-12
CTB-U43-L	4.73E-05	1.87E-13
EB-U43-S	3.27E-03	4.95E-10
EB-U43-L	3.27E-04	4.74E-11
EB1-U43-S	1.40E-03	1.79E-11
EB1-U43-L	1.40E-04	1.19E-12
FW1-G21-S	1.23E-03	1.15E-11
FW1-G21-L	8.58E-05	5.27E-13
FW1-U43-S	7.06E-03	6.07E-11
FW1-U43-L	5.00E-04	3.02E-12
FW2-U43-S	1.10e-03	7.50E-12
FW2-U43-L	7.69E-05	3.23E-13
FB-3-G21-L	5.98E-04	5.12E-12
FB-3-U43-L	3.23E-05	1.36E-13
FB-2A-G21-S	1.29E-04	8.52E-13
FB-2A-G21-L	1.29E-05	4.40E-14
FB-P-G21-S	3.44E-04	2.70E-12
FB-P-G21-L	3.44E-05	1.85E-13
FB-P-U43-S	1.08E-04	4.94E-13
FB-P-U43-L	1.08E-05	2.99E-14
FB-SW-U43-S	1.72E-04	8.18E-13
FB-SW-U43-L	1.72E-05	5.22E-14
PH-N71-S	4.12E-03	1.03E-11
PH-N71-L	2.95E-04	5.57E-13
PH-U43-S	2.14E-04	1.37E-12
PH-U43-L	2.15E-05	7.01E-14
RB-3-C12-L	1.56E-04	9.68E-12

Table 13.6-1
Flooding Analysis – At-Power Flooding Frequenciesand CDF

At-Power Flooding Scenario	Initiating Event Frequency	CDF
RB-3-G31A-L	1.34E-04	3.46E-11
RB-3-G31B-L	1.40E-04	2.49E-13
RB-3-P30-L	3.23E-05	1.02E-13
RB-3A-G21-L	1.29E-05	4.40E-14
RB-3A-G31A-L	2.65E-04	6.84E-11
RB-3A-G31B-L	2.80E-05	4.25E-14
RB-3A-U43-L	6.45E-05	2.75E-13
RB-3B-C12-L	1.08E-05	6.36E-13
RB-3B-G31A-L	1.85E-04	4.78E-11
RB-3B-G31B-L	2.65E-04	5.12E-13
RB-3B-P30-L	3.55E-05	1.13E-13
RB-3B-U43-L	8.17E-05	3.68E-13
RB-2A-C12-L	6.01E-04	3.78E-11
RB-2A-P30-L	2.15E-05	7.72E-13
RB-2B-G31A-L	7.63E-05	1.97E-11
RB-2B-G31B-L	7.63E-05	1.24E-13
RB2-U43-L	3.44E-05	1.24E-13
RB4-VA-B32-L	1.32E-05	7.09E-12
RB4-VB-B32-L	1.32E-05	7.90E-12
RB3-P10-L	4.30E-05	5.69E-11
RW-U43-S	2.49E-03	1.91E-11
RW-U43-L	2.49E-04	1.27E-12
SF-P10-S	4.30E-04	3.99E-11
SF-P10-L	4.30E-05	3.74E-12
SF-P41A-S	4.42E-03	4.24E-10
SF-P41A-L	5.33E-04	4.99E-11
SF-P41B-S	4.42E-03	4.24E-10
SF-P41B-L	5.33E-04	4.99E-11
SF-Y41-S	4.68E-04	4.37E-11
SF-Y41-L	9.36E-05	8.52E-12
TB-1-N21-L	7.19E-04	1.81E-10
TB-1-N25-L	9.03E-05	2.26E-11
TB-1-P10-L	2.37E-05	5.93E-12
TB-1-P30-L	8.60E-05	2.66E-11
TB-1-P41A-L	2.66E-04	6.70E-11
TB-1-P41B-L	2.66E-04	6.70E-11
TB-1-U43-L	1.94E-04	4.96E-11
TB-N21-L	5.92E-04	1.87E-10
TB-P10-L	4.30E-05	1.33E-11

Table 13.6-1
Flooding Analysis – At-Power Flooding Frequenciesand CDF

At-Power Flooding Scenario	Initiating Event Frequency	CDF
TB-P41A-L	5.82E-04	1.83E-10
TB-P41B-L	5.82E-04	1.83E-10
TB-U43-L	1.91E-04	2.82E-10
TB1-N11-L	2.58E-05	2.53E-12
TB1-N21-L	1.68E-04	1.78E-11
TB1-N22-L	3.23E-05	3.26E-12
TB1-N35-L	1.72E-05	1.65E-12
TB1-N36-L	7.31E-05	7.67E-12
TB1-P10-L	1.29E-05	1.23E-12
TB1-U43-L	6.02E-05	4.92E-10
TB2-N11-L	5.93E-04	5.56E-11
TB2-N21-L	8.82E-05	8.02E-12
TB2-N22-L	1.94E-05	1.60E-12
TB2-N35-L	2.15E-05	1.78E-12
TB2-N36-L	1.29E-05	1.05E-12
TB2-P10-L	4.30E-05	3.74E-12
TB2-U43-L	8.20E-05	1.02E-10
TB3-N11-L	1.12E-04	1.99E-13
TB3-N21-L	1.95E-05	2.80E-14
TB3-N22-L	1.29E-05	1.51E-14
TB3-N35-L	4.73E-05	7.53E-14
TB3-P10-L	6.45E-05	1.03E-13
TB4-P10-L	1.94E-06	0(1)
TBC-B21A-L	1.29E-04	6.03E-12
TBC-B21A-S	1.79E-03	1.02E-10
TBC-B21B-L	1.29E-04	1.72E-10
TBC-B21B-S	1.79E-03	2.40E-09
TBC-G31-L	7.43E-05	1.92E-11
TBC-G31-S	1.04E-03	2.69E-10
TBC-N11-L	9.50E-05	1.57E-13
TBC-N11-S	9.50E-04	2.45E-12
TBC-N21-L	5.42E-05	1.02E-13
TBC-N21-S	5.42E-04	3.00E-12
TBC-N35-L	3.44E-06	0(1)
TBC-N35-S	3.44E-05	5.22E-14
TBC-N36-L	1.29E-05	1.51E-14
TBC-N36-S	1.29E-04	2.29E-13
TBC-N71-L	2.06E-05	2.96E-14
TBC-N71-S	2.06E-04	3.86E-13

Table 13.6-1
Flooding Analysis – At-Power Flooding Frequenciesand CDF

At-Power Flooding Scenario	Initiating Event Frequency	CDF
TBC-P30-L	1.53-05	4.73E-14
TBC-P30-S	2.18E-04	1.30E-12
TBSW-U43-L	3.23E-05	1.12E-13
TBSW-U43-S	3.23E-04	1.82E-12

Notes: (1) A value of 0 indicates no cutsets were generated at 1.0E-15 truncation.

Table 13.6-2

Flooding Analysis – Shutdown Flooding Scenarios CDF

Shutdown Flooding Scenario	Frequency	CDF(2)
AD-A-Y52A-L-M5	1.18E-07	7.033E-15
AD-A-Y52A-L-M5O	2.90E-08	1.07E-15
AD-A-Y52A-L-M6U	3.66E-08	5.25E-15
AD-A-Y52A-S-M5	1.18E-06	1.78E-13
AD-A-Y52A-S-M5O	2.90E-07	1.67E-13
AD-A-Y52A-S-M6U	3.66E-07	1.38E-13
AD-AT-R21A-L-M5	1.01E-06	1.48E-13
AD-AT-R21A-L-M5O	2.47E-07	1.23E-13
AD-AT-R21A-L-M6U	3.11E-07	1.13E-13
AD-AT-R21A-S-M5	1.44E-05	3.14E-12
AD-AT-R21A-S-M5O	3.54E-06	3.02E-12
AD-AT-R21A-S-M6U	4.45E-06	3.88E-12
AD-B-Y52B-L-M5	1.18E-07	7.03E-15
AD-B-Y52B-L-M5O	2.90E-08	3.69E-15
AD-B-Y52B-L-M6U	3.66E-08	3.40E-15
AD-B-Y52B-S-M5	1.18E-06	1.58E-13
AD-B-Y52B-S-M5O	2.90E-07	1.08E-13
AD-B-Y52B-S-M6U	3.66E-07	6.26E-14
AD-BT-R21B-L-M5	1.01E-06	1.31E-13
AD-BT-R21B-L-M5O	2.47E-07	7.96E-14
AD-BT-R21B-L-M6U	3.11E07	5.32E-14
AD-BT-R21B-S-M5	1.44E-05	2.56E-12
AD-BT-R21B-S-M5O	3.54E-06	1.95E-12
AD-BT-R21B-S-M6U	4.45E-06	1.20E-12
CBSW-U43-L-M5	3.78E-07	3.90E-14
CBSW-U43-L-M5O	9.29E-08	3.13E-14
CBSW-U43-L-M6U	1.17E-07	2.41E-14
CTA-U43-L-M5	5.20E-07	6.39E-14
CTA-U43-L-M5O	1.28E-07	4.32E-14
CTA-U43-L-M6U	1.61E-07	4.04E-14
CTA-U43-S-M5	5.20E-06	9.99E-13
CTA-U43-S-M5O	1.28E-06	1.00E-12
CTA-U43-S-M6U	1.61E-06	7.93E-13
CTB-U43-L-M5	5.20E-07	6.39E-14
CTB-U43-L-M5O	1.28E-07	4.32E-14
CTB-U43-L-M6U	1.61E-07	4.04E-14
CTB-U43-S-M5	5.20E-06	9.99E-13
CTB-U43-S-M5O	1.28E-06	1.00E-12
CTB-U43-S-M6U	1.61E-06	7.93E-13
EB-U43-L-M5	3.59E-06	1.79E-12
EB-U43-L-M5O	8.82E-07	2.34E-12
EB-U43-L-M6U	1.11E-06	2.37E-12
EB-U43-S-M5	3.59E-05	2.24E-11
EB-U43-S-M5O	8.82E-06	2.84E-11
EB-U43-S-M6U	1.11E-05	2.75E-11
EB1-U43-L-M5	1.54E-06	2.56E-13
EB1-U43-L-M5O	3.77E-07	2.36E-13
EB1-U43-L-M6U	4.75E-07	2.04E-13

Table 13.6-2

Flooding Analysis – Shutdown Flooding Scenarios CDF

Shutdown Flooding Scenario	Frequency	CDF(2)
EB1-U43-S-M5	1.54E-05	3.38E-12
EB1-U43-S-M5O	3.77E-06	3.24E-12
EB1-U43-S-M6U	4.75E-06	2.59E-12
FB-2A-G21-L-M5	1.42E-07	4.70E-13
FB-2A-G21-L-M5O	3.48E-08	7.39E-13
FB-2A-G21-L-M6U	4.39E-08	7.76E-13
FB-2A-G21-S-M5	1.42E-06	6.03E-12
FB-2A-G21-S-M5O	3.48E-07	8.83E-12
FB-2A-G21-S-M6U	4.39E-07	9.12E-12
FB-3-G21-L-M5	6.58E-06	3.02E-11
FB-3-G21-L-M5O	1.61E-06	6.85E-12
FB-3-G21-L-M6U	2.03E-06	8.75E-12
FB-3-U43-L-M5	3.55E-07	1.28E-12
FB-3-U43-L-M5O	8.71E-08	1.80E-12
FB-3-U43-L-M6U	1.10E-07	1.90E-12
FB-P-G21-L-M5	3.78E-07	1.50E-12
FB-P-G21-L-M5O	9.29E-08	2.11E-12
FB-P-G21-L-M6U	1.17E-07	2.23E-12
FB-P-G21-S-M5	3.78E-06	1.68E-11
FB-P-G21-S-M5O	9.29E-07	2.40E-11
FB-P-G21-S-M6U	1.17E-06	2.47E-11
FB-P-U43-L-M5	1.18E-07	7.03E-15
FB-P-U43-L-M5O	2.90E-07	5.23E-15
FB-P-U43-L-M6U	3.66E-08	5.25E-15
FB-P-U43-S-M5	1.18E-06	1.78E-13
FB-P-U43-S-M5O	2.90E-07	1.67E-13
FB-P-U43-S-M6U	3.66E-07	1.38E-13
FB-SW-U43-L-M5	1.89E-07	1.25E-14
FB-SW-U43-L-M5O	4.64E-08	1.13E-14
FB-SW-U43-L-M6U	5.85E-08	8.39E-15
FB-SW-U43-S-M5	1.89E-06	3.15E-13
FB-SW-U43-S-M5O	4.64E-07	3.21E-13
FB-SW-U43-S-M6U	5.85E-07	2.56E-13
FW1-G21-L-M5	9.44E-07	3.93E-12
FW1-G21-L-M5O	2.32E-07	5.78E-12
FW1-G21-L-M6U	2.92E-07	5.99E-12
FW1-G21-S-M5	1.35E-05	6.27E-11
FW1-G21-S-M5O	3.31E-06	8.82E-11
FW1-G21-S-M6U	4.17E-06	8.99E-11
FW1-U43-L-M5	5.50E-06	1.06E-12
FW1-U43-L-M5O	1.35E-06	1.06E-12
FW1-U43-L-M6U	1.70E-06	8.38E-13
FW1-U43-S-M5	7.77E-05	1.83E-11
FW1-U43-S-M5O	1.91E-05	1.83E-11
FW1-U43-S-M6U	2.40E-05	1.45E-11
FW2-U43-L-M5	8.46E-07	1.23E-13
FW2-U43-L-M5O	2.08E-07	9.34E-14
FW2-U43-L-M6U	2.61E-07	7.81E-14

Table 13.6-2

Flooding Analysis – Shutdown Flooding Scenarios CDF

Shutdown Flooding Scenario	Frequency	CDF(2)
FW2-U43-S-M5	1.21E-05	2.61E-12
FW2-U43-S-M5O	2.96E-06	2.47E-12
FW2-U43-S-M6U	3.73E-06	1.97E-12
PH1-U43-L-M5	2.37E-07	2.11E-14
PH1-U43-L-M5O	5.81E-08	1.62E-14
PH1-U43-L-M6U	7.31E-08	1.17E-14
PH1-U43-S-M5	2.37E-06	4.11E-13
PH1-U43-S-M5O	5.81E-07	4.13E-13
PH1-U43-S-M6U	7.31E-07	3.27E-13
RB-2A-C12-L-M5	6.61E-06	2.00E-11
RB-2A-C12-L-M5O	1.62E-06	1.61E-11
RB-2A-C12-L-M6U	2.04E-06	1.01E-11
RB-2A-P30-L-M5	2.37E-07	6.81E-13
RB-2A-P30-L-M5O	5.81E-08	5.37E-13
RB-2A-P30-L-M6U	7.31E-08	3.43E-13
RB-2B-G31A-L-M5	8.39E-07	2.49E-12
RB-2B-G31A-L-M5O	2.06E-07	1.99E-12
RB-2B-G31A-L-M6U	2.59E-07	1.24E-12
RB-2B-G31B-L-M5	8.39E-07	1.14E-13
RB-2B-G31B-L-M5O	2.06E-07	5.81E-14
RB-2B-G31B-L-M6U	2.59E-07	3.57E-14
RB-3-C12-L-M5	1.71E-06	5.12E-12
RB-3-C12-L-M5O	4.21E-07	4.13E-12
RB-3-C12-L-M6U	5.30E-07	2.59E-12
RB-3-G31A-L-M5	1.48E-06	4.43E-12
RB-3-G31A-L-M5O	3.63E-07	3.56E-12
RB-3-G31A-L-M6U	4.57E-07	2.23E-12
RB-3-G31B-L-M5	1.56E-06	2.48E-13
RB-3-G31B-L-M5O	3.77E-07	3.70E-12
RB-3-G31B-L-M6U	4.75E-07	1.06E-13
RB-3-P30-L-M5	3.55E-07	7.20E-14
RB-3-P30-L-M5O	8.71E-08	5.32E-14
RB-3-P30-L-M6U	1.10E-07	3.34E-14
RB-3A-G21-L-M5	1.42E-07	4.70E-13
RB-3A-G21-L-M5O	3.48E-08	7.39E-13
RB-3A-G21-L-M6U	4.39E-08	7.76E-13
RB-3A-G31A-L-M5	2.91E-06	8.78E-12
RB-3A-G31A-L-M5O	7.15E-07	7.06E-12
RB-3A-G31A-L-M6U	9.00E-07	4.42E-12
RB-3A-G31B-L-M5	3.07E-07	2.70E-14
RB-3A-G31B-L-M5O	7.55E-08	1.70E-14
RB-3A-G31B-L-M6U	9.50E-08	1.15E-14
RB-3A-U43-L-M5	7.10E-07	9.25E-14
RB-3A-U43-L-M5O	1.74E-07	7.81E-14
RB-3A-U43-L-M6U	2.19E-07	5.99E-14
RB-3B-C12-L-M5	1.18E-07	3.37E-13
RB-3A-U43-L-M5O	2.90E-08	2.60E-13
RB-3A-U43-L-M6U	3.66E-08	1.67E-13

Table 13.6-2

Flooding Analysis – Shutdown Flooding Scenarios CDF

Shutdown Flooding Scenario	Frequency	CDF(2)
RB-3B-G31A-L-M5	2.04E-06	6.11E-12
RB-3B-G31A-L-M5O	5.00E-07	4.91E-12
RB-3B-G31A-L-M6U	6.30E-07	3.08E-12
RB-3B-G31B-L-M5	2.91E-06	4.86E-13
RB-3B-G31B-L-M5O	7.15E-07	3.64E-13
RB-3B-G31B-L-M6U	9.00E-07	2.32E-13
RB-3B-P30-L-M5	3.90E-07	8.33E-14
RB-3B-P30-L-M5O	9.58E-08	5.96E-14
RB-3B-P30-L-M6U	1.21E-07	3.68E-14
RB-3B-U43-L-M5	8.99E-07	1.33E-13
RB-3B-U43-L-M5O	2.21E-07	1.04E-13
RB-3B-U43-L-M6U	2.78E-07	9.76E-14
RBCNT-B21A-L-M5	2.70E-06	1.06E-11
RBCNT-B21A-L-M5O	6.62E-07	1.52E-11
RBCNT-B21A-L-M6U	8.34E-07	1.56E-11
RBCNT-B21B-L-M5	2.70E-06	8.10E-12
RBCNT-B21B-L-M5O	6.62E-07	6.52E-12
RBCNT-B21B-L-M6U	8.34E-07	4.10E-12
RBCNT-E50A-L-M5	1.14E-06	2.43E-11
RBCNT-E50A-L-M5O	2.81E-07	750E.11
RBCNT-E50A-L-M6U	3.54E-07	8.57E-11
RBCNT-E50B-L-M5	1.14E-06	1.53E-13
RBCNT-E50B-L-M5O	2.81E-07	1.19E-13
RBCNT-E50B-L-M6U	3.54E-07	7.84E-14
RBCNT-E50C-L-M5	1.14E-06	1.53E-13
RBCNT-E50C-L-M5O	2.81E-07	1.19E-13
RBCNT-E50C-L-M6U	3.54E-07	7.84E-14
RBCNT-E50D-L-M5	1.14E-06	2.43E-11
RBCNT-E50D-L-M5O	2.81E-07	7.50E-11
RBCNT-E50D-L-M6U	3.54E-07	8.57E-11
RB2-U43-L-M5	3.78E-07	3.90E-14
RB2-U43-L-M5O	9.29E-08	3.13E-14
RB2-U43-L-M6U	1.17E-07	2.41E-14
RB3-C41-L-M5	2.60E-06	3.99E-13
RB3-C41-L-M5O	6.39E-07	3.68E-12
RB3-C41-L-M6U	8.04E-07	1.90E-13
RB3-P30-L-M5	4.73E-07	9.51E-10
RB3-P30-L-M5O	1.16E-07	2.33E-10
RB3-P30-L-M6U	1.46E-07	9.26E-11
RB4-VA-B32-L-M5	1.45E-07	3.60E-14
RB4-VA-B32-L-M5O	3.56E-08	6.75E-15
RB4-VA-B32-L-M6U	4.48E-08	4.17E-15
RB4-VB-B32-L-M5	1.45E-07	3.60E-14
RB4-VB-B32-L-M5O	3.56E-08	6.75E-15
RB4-VB-B32-L-M6U	4.48E-08	4.17E-15
RW-U43-L-M5	2.74E-06	4.86E-13
RW-U43-L-M5O	6.73E-07	4.80E-13
RW-U43-L-M6U	8.48E-07	3.88E-13

Table 13.6-2

Flooding Analysis – Shutdown Flooding Scenarios CDF

Shutdown Flooding Scenario	Frequency	CDF(2)
RW-U43-S-M5	2.74E-05	6.22E-12
RW-U43-S-M5O	6.73E-06	6.09E-12
RW-U43-S-M6U	8.48E-06	4.89E-12
SF-P10-L-M5	4.73E-07	1.57E-12
SF-P10-L-M5O	1.16E-07	1.37E-12
SF-P10-L-M6U	1.46E-07	9.70E-13
SF-P10-S-M5	4.73E-06	1.65E-11
SF-P10-S-M5O	1.16E-06	1.47E-11
SF-P10-S-M6U	1.46E-06	1.05E-11
SF-P41A-L-M5	5.87E-06	2.05E-11
SF-P41A-L-M5O	1.44E-06	1.83E-11
SF-P41A-L-M6U	1.81E-06	1.31E-11
SF-P41A-S-M5	4.86E-05	1.73E-10
SF-P41A-S-M5O	1.19E-05	1.54E-10
SF-P41A-S-M6U	1.50E-05	1.10E-10
SF-P41B-L-M5	5.87E-06	2.05E-11
SF-P41B-L-M5O	1.44E-06	1.83E-11
SF-P41B-L-M6U	1.81E-06	1.31E-11
SF-P41B-S-M5	4.86E-05	1.73E-10
SF-P41B-S-M5O	1.19E-05	1.54E-10
SF-P41B-S-M6U	1.50E-05	1.10E-10
SF-Y41-L-M5	1.03E-06	3.51E-12
SF-Y41-L-M5O	2.53E-07	3.08E-12
SF-Y41-L-M6U	3.18E-07	2.21E-12
SF-Y41-S-M5	5.15E-06	1.79E-11
SF-Y41-S-M5O	1.26E-06	1.60E-11
SF-Y41-S-M6U	1.59E-06	1.15E-11
TB-1-P10-L-M5	2.60E-07	2.20E-14
TB-1-P10-L-M5O	6.39E-08	1.44E-14
TB-1-P10-L-M6U	8.04E-08	8.84E-15
TB-1-P30-L-M5	9.46E-07	2.82E-12
TB-1-P30-L-M5O	2.32E-07	2.24E-12
TB-1-P30-L-M6U	2.92E-07	1.40E-12
TB-1-P41A-L-M5	2.93E-06	5.81E-13
TB-1-P41A-L-M5O	7.18E-07	4.34E-13
TB-1-P41A-L-M6U	9.04E-07	2.73E-13
TB-1-P41B-L-M5	2.93E-06	5.77E-13
TB-1-P41B-L-M5O	7.18E-07	4.34E-13
TB-1-P41B-L-M6U	9.04E-06	2.73E-13
TB-1-U43-L-M5	2.13E-06	3.60E-13
TB-1-U43-L-M5O	5.22E-07	3.68E-13
TB-1-U43-L-M6U	6.58E-07	2.91E-13
TB-P10-L-M5	4.73E-07	1.57E-12
TB-P10-L-M5O	1.16E-07	1.37E-12
TB-P10-L-M6U	1.46E-07	9.70E-13
TB-P41A-L-M5	6.40E-06	2.24E-11
TB-P41A-L-M5O	1.57E-06	2.00E-11
TB-P41A-L-M6U	1.98E-06	1.43E-11

Table 13.6-2

Flooding Analysis – Shutdown Flooding Scenarios CDF

Shutdown Flooding Scenario	Frequency	CDF(2)
TB-P41B-L-M5	6.40E-06	2.24E-11
TB-P41A-L-M50	1.57E-06	2.00E-11
TB-P41A-L-M6U	1.98E-06	1.43E-11
TB-U43-L-M5	2.10E-06	1.36E-10
TB-U43-L-M5O	5.17E-07	1.90E-10
TB-U43-L-M6U	6.51E-07	1.92E-10
TB1-P10-L-M5	1.42E-07	9.13E-11
TB1-P10-L-M5O	3.48E-08	3.88E-13
TB1-P10-L-M6U	4.39E-08	2.81E-13
TB1-U43-L-M5	6.62E-07	4.29E-11
TB1-U43-L-M5O	1.63E-07	5.98E-11
TB1-U43-L-M6U	2.05E-07	6.05E-11
TB2-P10-L-M5	4.73E-07	1.57E-12
TB2-P10-L-M5O	1.16E-07	1.37E-12
TB2-P10-L-M6U	1.46E-07	9.70E-13
TB2-U43-L-M5	9.02E-07	5.84E-11
TB2-U43-L-M5O	2.21E-07	8.12E-11
TB2-U43-L-M6U	2.79E-07	8.23E-11
TB3-P10-L-M5	7.10E-07	8.21E-14
TB3-P10-L-M5O	1.74E-07	4.91E-14
TB3-P10-L-M6U	2.19E-07	2.65E-14
TB4-P10-L-M5	2.13E-08	0 (1)
TB4-P10-L-M5O	5.22E-09	0 (1)
TB4-P10-L-M6U	6.58E-09	0 (1)
TBC-B21A-L-M5	1.42E-06	5.45E-12
TBC-B21A-L-M5O	3.47E-07	7.91E-12
TBC-B21A-L-M6U	4.37E-07	8.14E-12
TBC-B21A-S-M5	1.97E-05	8.18E-11
TBC-B21A-S-M5O	4.83E-06	1.15E-10
TBC-B21A-S-M6U	6.08E-06	1.17E-10
TBC-B21B-L-M5	1.42E-06	4.25E-12
TBC-B21B-L-M5O	3.47E-07	3.40E-12
TBC-B21B-L-M6U	4.37E-07	2.13E-12
TBC-B21B-S-M5	1.97E-05	6.00E-11
TBC-B21B-S-M5O	4.83E-06	4.83E-11
TBC-B21B-S-M6U	6.08E-06	3.02E-11
TBC-G31-L-M5	8.17E-07	2.43E-12
TBC-G31-L-M5O	2.01E-07	1.94E-12
TBC-G31-L-M6U	2.53E-07	1.21E-12
TBC-G31-S-M5	1.15E-05	3.50E-11
TBC-G31-S-M5O	2.82E-06	2.81E-11
TBC-G31-S-M6U	3.55E-06	1.76E-11
TBC-P10-L-M5	4.73E-09	0 (1)
TBC-P10-L-M5O	1.16E-09	0 (1)
TBC-P10-L-M6U	1.46E-09	0 (1)
TBC-P10-S-M5	4.73E-08	1.74E-15
TBC-P10-S-M5O	1.16E-08	0 (1)
TBC-P10-S-M6U	1.46E-08	0 (1)

Table 13.6-2

Flooding Analysis – Shutdown Flooding Scenarios CDF

Shutdown Flooding Scenario	Frequency	CDF[(2)]
TBC-P30-L-M5	1.68E-07	2.79E-14
TBC-P30-L-M5O	4.13E-08	2.18E-14
TBC-P30-L-M6U	5.20E-08	1.35E-14
TBC-P30-S-M5	2.40E-04	7.01E-13
TBC-P30-S-M5O	5.89E-07	5.30E-13
TBC-P30-S-M6U	7.41E-07	3.36E-13
TB-SW-U43-L-M5	3.55E-07	3.28E-14
TB-SW-U43-L-M5O	8.71E-08	2.84E-14
TB-SW-U43-L-M6U	1.10E-07	2.27E-14
TB-SW-U43-S-M5	3.55E-06	6.34E-13
TB-SW-U43-S-M5O	8.71E-07	6.48E-13
TB-SW-U43-S-M6U	1.10E-06	5.22E-13

Notes: [(1)] A value of 0 indicates no cutsets were generated at 1.0E-15 truncation.

[(2)] CDF contributions for shutdown flood scenarios are the combined CDF from three scenarios, Mode 5, Mode 5 Open and Mode 6 Unflooded. Each scenario has a different initiating event frequency and credits only systems available in each operating mode.

13.7 RESULTS

The ESBWR flooding risk analysis was quantified with equipment affected by the flooding having basic events set to TRUE (failed) at a truncation of 1E-15. The flooding risk is a summation of the CDFs for each of the flooding scenarios. No quantitative screening was performed on the flood scenarios to eliminate low probability flooding initiating events or sequences.

The CDF and LRF results of the ESBWR probabilistic flooding analysis are summarized in the following tables:

- CDF Contribution of At-Power Flooding Scenarios (Table 13.6-1),
- Level 2 LRF Results (Table 13.7-1), and
- CDF Contribution of Shutdown Flooding Scenarios (Table 13.6-2).

Each table lists the flooding scenario and the resulting CDF. As shown in these tables, the at-power internal flooding CDF is estimated at 6.95E-09/year, the at-power flooding LRF excluding Technical Specification Leakage (TSL) is 4.09E-09/year. For the shutdown internal flooding, CDF is 5.21E-09/year and the shutdown flooding LRF, which is the same as the shutdown internal flooding CDF, is estimated at 5.21E-09/year.

The top 200 cutsets for the at-power internal flooding CDF are provided in Table 13.7-2, and those for shutdown internal flooding CDF are provided in Table 13.7-3.

The risk importance measures for the at-power internal flooding CDF are provided in Table 13.7-4, and those for shutdown internal flooding CDF are provided in Table 13.7-5.

Table 13.7-1

Results – Level 2 LRF

Release Category	LRF (per year)[1]
TSL	2.80E-09
FR	1.08E-09
BYP (At-Power)	2.89E-09
BYP (Shutdown)	5.21E-09
OPVB	2.00E-12
OPW1	6.71E-13
OPW2	1.30E-10
CCIW	1.44E-12
CCID	7.57E-13
EVE	--
BOC	5.28E-13

[1] The frequency is the summed contribution to the release category from all accident classes, as shown in Table 8A-3. BYP is also augmented with frequency from shutdown operations that assume all shutdown core damage sequences are bypass sequences.

Table 13.7-2

Results - Internal Flooding At-Power Cutset Report

Cutsets with Descriptions Report Flooding At-Power Core Damage Frequency = 6.95E-09 Top 200 Cutsets				
#	**Cutset Prob**	**Event Prob**	**Event**	**Description**
1	5.37E-10	1.79E-03	%FL_TBC-B21B-S	
		3.00E-03	B21-SQV-CC-F004A	EXPLOSIVE VALVE DPV F004A FAILS TO OPERATE
		1.00E-04	C63-CCFSOFTWARE_S	ESF SPURIOUS COMMON CAUSE SOFTWARE FAILURE
2	5.37E-10	1.79E-03	%FL_TBC-B21B-S	
		3.00E-03	B21-SQV-CC-F004B	EXPLOSIVE VALVE DPV B FAILS TO OPERATE
		1.00E-04	C63-CCFSOFTWARE_S	ESF SPURIOUS COMMON CAUSE SOFTWARE FAILURE
3	5.37E-10	1.79E-03	%FL_TBC-B21B-S	
		3.00E-03	B21-SQV-CC-F004C	EXPLOSIVE VALVE DPV C FAILS TO OPERATE
		1.00E-04	C63-CCFSOFTWARE_S	ESF SPURIOUS COMMON CAUSE SOFTWARE FAILURE
4	5.37E-10	1.79E-03	%FL_TBC-B21B-S	
		3.00E-03	B21-SQV-CC-F004D	EXPLOSIVE VALVE DPV D FAILS TO OPERATE
		1.00E-04	C63-CCFSOFTWARE_S	ESF SPURIOUS COMMON CAUSE SOFTWARE FAILURE
5	2.60E-10	1.04E-03	%FL_TBC-G31-S	
		2.50E-07	C12-ROD-CF-SCRAM	CCF OF CONTROL RODS TO INSERT
6	1.81E-10	6.02E-05	%FL_TB1-U43-L	
		3.00E-03	B32-SQV-CC-F104A	F104A FAILS TO OPEN
		1.00E-03	B32-UV_-OO-F105A	CHECK VALVE FAILS TO CLOSE
		1.00E+00	XHOS72H	HOUSE EVENT: 72 HOURS (VALUE =1)

Table 13.7-2

Results - Internal Flooding At-Power Cutset Report

Cutsets with Descriptions Report Flooding At-Power Core Damage Frequency = 6.95E-09 Top 200 Cutsets				
#	**Cutset Prob**	**Event Prob**	**Event**	**Description**
7	1.81E-10	6.02E-05	%FL_TB1-U43-L	
		3.00E-03	B32-SQV-CC-F104B	F104B FAILS TO OPEN
		1.00E-03	B32-UV_-OO-F105B	CHECK VALVE FAILS TO CLOSE
		1.00E+00	XHOS72H	HOUSE EVENT: 72 HOURS (VALUE =1)
8	1.80E-10	7.19E-04	%FL_TB-1-N21-L	
		2.50E-07	C12-ROD-CF-SCRAM	CCF OF CONTROL RODS TO INSERT
9	1.48E-10	5.92E-04	%FL_TB-N21-L	
		2.50E-07	C12-ROD-CF-SCRAM	CCF OF CONTROL RODS TO INSERT
10	1.46E-10	5.82E-04	%FL_TB-P41A-L	
		2.50E-07	C12-ROD-CF-SCRAM	CCF OF CONTROL RODS TO INSERT
11	1.46E-10	5.82E-04	%FL_TB-P41B-L	
		2.50E-07	C12-ROD-CF-SCRAM	CCF OF CONTROL RODS TO INSERT
12	6.65E-11	2.66E-04	%FL_TB-1-P41A-L	
		2.50E-07	C12-ROD-CF-SCRAM	CCF OF CONTROL RODS TO INSERT
13	6.65E-11	2.66E-04	%FL_TB-1-P41B-L	
		2.50E-07	C12-ROD-CF-SCRAM	CCF OF CONTROL RODS TO INSERT
14	6.63E-11	2.65E-04	%FL_RB-3A-G31A-L	
		2.50E-07	C12-ROD-CF-SCRAM	CCF OF CONTROL RODS TO INSERT

Table 13.7-2

Results - Internal Flooding At-Power Cutset Report

Cutsets with Descriptions Report Flooding At-Power Core Damage Frequency = 6.95E-09 Top 200 Cutsets				
#	**Cutset Prob**	**Event Prob**	**Event**	**Description**
15	5.73E-11	1.91E-04	%FL_TB-U43-L	
		1.00E-04	B32-NPO-CC-F105A	F105A Fails to Open
		3.00E-03	B32-SQV-CC-F104A	F104A FAILS TO OPEN
		1.00E+00	XHOS72H	HOUSE EVENT: 72 HOURS (VALUE =1)
16	5.73E-11	1.91E-04	%FL_TB-U43-L	
		1.00E-04	B32-NPO-CC-F105B	F105B fails to open
		3.00E-03	B32-SQV-CC-F104B	F104B FAILS TO OPEN
		1.00E+00	XHOS72H	HOUSE EVENT: 72 HOURS (VALUE =1)
17	4.85E-11	1.94E-04	%FL_TB-1-U43-L	
		2.50E-07	C12-ROD-CF-SCRAM	CCF OF CONTROL RODS TO INSERT
18	4.77E-11	1.91E-04	%FL_TB-U43-L	
		2.50E-07	C12-ROD-CF-SCRAM	CCF OF CONTROL RODS TO INSERT
19	4.63E-11	1.85E-04	%FL_RB-3B-G31A-L	
		2.50E-07	C12-ROD-CF-SCRAM	CCF OF CONTROL RODS TO INSERT
20	4.42E-11	4.42E-03	%FL_SF-P41A-S	
		1.00E-04	C63-CCFSOFTWARE	Common cause failure of software
		1.00E-04	C72-CCFSOFTWARE	COMMON CAUSE FAILURE OF DPS PROCESSORS
21	4.42E-11	4.42E-03	%FL_SF-P41B-S	
		1.00E-04	C63-CCFSOFTWARE	Common cause failure of software
		1.00E-04	C72-CCFSOFTWARE	COMMON CAUSE FAILURE OF DPS PROCESSORS

Table 13.7-2

Results - Internal Flooding At-Power Cutset Report

Cutsets with Descriptions Report Flooding At-Power Core Damage Frequency = 6.95E-09 Top 200 Cutsets				
#	**Cutset Prob**	**Event Prob**	**Event**	**Description**
22	3.87E-11	1.29E-04	%FL_TBC-B21B-L	
		3.00E-03	B21-SQV-CC-F004A	EXPLOSIVE VALVE DPV F004A FAILS TO OPERATE
		1.00E-04	C63-CCFSOFTWARE_S	ESF SPURIOUS COMMON CAUSE SOFTWARE FAILURE
23	3.87E-11	1.29E-04	%FL_TBC-B21B-L	
		3.00E-03	B21-SQV-CC-F004B	EXPLOSIVE VALVE DPV B FAILS TO OPERATE
		1.00E-04	C63-CCFSOFTWARE_S	ESF SPURIOUS COMMON CAUSE SOFTWARE FAILURE
24	3.87E-11	1.29E-04	%FL_TBC-B21B-L	
		3.00E-03	B21-SQV-CC-F004C	EXPLOSIVE VALVE DPV C FAILS TO OPERATE
		1.00E-04	C63-CCFSOFTWARE_S	ESF SPURIOUS COMMON CAUSE SOFTWARE FAILURE
25	3.87E-11	1.29E-04	%FL_TBC-B21B-L	
		3.00E-03	B21-SQV-CC-F004D	EXPLOSIVE VALVE DPV D FAILS TO OPERATE
		1.00E-04	C63-CCFSOFTWARE_S	ESF SPURIOUS COMMON CAUSE SOFTWARE FAILURE
26	3.35E-11	1.34E-04	%FL_RB-3-G31A-L	
		2.50E-07	C12-ROD-CF-SCRAM	CCF OF CONTROL RODS TO INSERT
27	2.94E-11	3.27E-03	%FL_EB-U43-S	
		3.00E-03	B32-SQV-CC-F104A	F104A FAILS TO OPEN
		1.00E-03	B32-UV_-OO-F105A	CHECK VALVE FAILS TO CLOSE
		3.00E-03	R10-LOSP-EPRI	CONSEQUENTIAL LOSS OF PREFERRED OFFSITE POWER DUE TO A TRANSIENT
		1.00E+00	XHOS72H	HOUSE EVENT: 72 HOURS (VALUE =1)

Table 13.7-2

Results - Internal Flooding At-Power Cutset Report

Cutsets with Descriptions Report Flooding At-Power Core Damage Frequency = 6.95E-09 Top 200 Cutsets				
#	**Cutset Prob**	**Event Prob**	**Event**	**Description**
28	2.94E-11	3.27E-03	%FL_EB-U43-S	
		3.00E-03	B32-SQV-CC-F104B	F104B FAILS TO OPEN
		1.00E-03	B32-UV_-OO-F105B	CHECK VALVE FAILS TO CLOSE
		3.00E-03	R10-LOSP-EPRI	CONSEQUENTIAL LOSS OF PREFERRED OFFSITE POWER DUE TO A TRANSIENT
		1.00E+00	XHOS72H	HOUSE EVENT: 72 HOURS (VALUE =1)
29	2.69E-11	1.79E-03	%FL_TBC-B21B-S	
		1.50E-04	B21-SQV-CC_ALL	CCF of all components in group 'B21-SQV-CC'
		1.00E-04	C63-CCFSOFTWARE_S	ESF SPURIOUS COMMON CAUSE SOFTWARE FAILURE
30	2.46E-11	8.20E-05	%FL_TB2-U43-L	
		1.00E-04	B32-NPO-CC-F105A	F105A Fails to Open
		3.00E-03	B32-SQV-CC-F104A	F104A FAILS TO OPEN
		1.00E+00	XHOS72H	HOUSE EVENT: 72 HOURS (VALUE =1)
31	2.46E-11	8.20E-05	%FL_TB2-U43-L	
		1.00E-04	B32-NPO-CC-F105B	F105B fails to open
		3.00E-03	B32-SQV-CC-F104B	F104B FAILS TO OPEN
		1.00E+00	XHOS72H	HOUSE EVENT: 72 HOURS (VALUE =1)
32	2.26E-11	9.03E-05	%FL_TB-1-N25-L	
		2.50E-07	C12-ROD-CF-SCRAM	CCF OF CONTROL RODS TO INSERT
33	2.15E-11	8.60E-05	%FL_TB-1-P30-L	
		2.50E-07	C12-ROD-CF-SCRAM	CCF OF CONTROL RODS TO INSERT

Table 13.7-2

Results - Internal Flooding At-Power Cutset Report

Cutsets with Descriptions Report Flooding At-Power Core Damage Frequency = 6.95E-09 Top 200 Cutsets				
#	**Cutset Prob**	**Event Prob**	**Event**	**Description**
34	2.01E-11	6.02E-05	%FL_TB1-U43-L	
		3.33E-04	B32-SQV-CC-XCONN_1_2	CCF of two components: B32-SQV-CC-F104A & B32-SQV-CC-F104B
		1.00E-03	B32-UV_-OO-F105A	CHECK VALVE FAILS TO CLOSE
		1.00E+00	XHOS72H	HOUSE EVENT: 72 HOURS (VALUE =1)
35	2.01E-11	6.02E-05	%FL_TB1-U43-L	
		3.33E-04	B32-SQV-CC-XCONN_1_2	CCF of two components: B32-SQV-CC-F104A & B32-SQV-CC-F104B
		1.00E-03	B32-UV_-OO-F105B	CHECK VALVE FAILS TO CLOSE
		1.00E+00	XHOS72H	HOUSE EVENT: 72 HOURS (VALUE =1)
36	1.96E-11	4.30E-05	%FL_RB3-P10-L	
		4.55E-07	R13-XFL-LP-CCFNSR2_ALL	CCF of all components in group 'R13-XFL-LP-CCFNSR2'
37	1.91E-11	7.63E-05	%FL_RB-2B-G31A-L	
		2.50E-07	C12-ROD-CF-SCRAM	CCF OF CONTROL RODS TO INSERT
38	1.86E-11	7.43E-05	%FL_TBC-G31-L	
		2.50E-07	C12-ROD-CF-SCRAM	CCF OF CONTROL RODS TO INSERT
39	1.81E-11	6.02E-05	%FL_TB1-U43-L	
		1.00E-04	B32-NPO-CC-F105A	F105A Fails to Open
		3.00E-03	B32-SQV-CC-F104A	F104A FAILS TO OPEN
		1.00E+00	XHOS72H	HOUSE EVENT: 72 HOURS (VALUE =1)

Table 13.7-2

Results - Internal Flooding At-Power Cutset Report

Cutsets with Descriptions Report Flooding At-Power Core Damage Frequency = 6.95E-09 Top 200 Cutsets				
#	**Cutset Prob**	**Event Prob**	**Event**	**Description**
40	1.81E-11	6.02E-05	%FL_TB1-U43-L	
		1.00E-04	B32-NPO-CC-F105B	F105B fails to open
		3.00E-03	B32-SQV-CC-F104B	F104B FAILS TO OPEN
		1.00E+00	XHOS72H	HOUSE EVENT: 72 HOURS (VALUE =1)
41	1.64E-11	3.27E-03	%FL_EB-U43-S	
		1.00E-04	C71-CCFSOFTWARE	RPS COMMON CAUSE SOFTWARE FAILURE
		1.00E-01	C71-XHE-FO-SCRAM	OPERATOR FAILS TO PERFORM MANUAL SCRAM
		5.00E-04	R16-BDC-TM-R16C	DC BUS R16-C IN MAINTENANCE
42	1.64E-11	3.27E-03	%FL_EB-U43-S	
		1.00E-04	C71-CCFSOFTWARE	RPS COMMON CAUSE SOFTWARE FAILURE
		1.00E-01	C71-XHE-FO-SCRAM	OPERATOR FAILS TO PERFORM MANUAL SCRAM
		5.00E-04	R16-BT_-TM-R16BTC	BATTERY R16-BTC IN TEST AND MAINTENANCE
43	1.58E-11	3.27E-03	%FL_EB-U43-S	
		1.00E+00	B32-NONCONDENSE	Non condensable gasses form in ICS sufficiently to require venting
		1.00E-04	C63-CCFSOFTWARE	Common cause failure of software
		3.00E-03	R10-LOSP-EPRI	CONSEQUENTIAL LOSS OF PREFERRED OFFSITE POWER DUE TO A TRANSIENT
		1.61E-02	R13-XHE-FO-ADG	OPERATOR FAILS TO ALIGN THE ADG BUSES TO UPS BUSES
		1.00E+00	XHOS72H	HOUSE EVENT: 72 HOURS (VALUE =1)

Table 13.7-2

Results - Internal Flooding At-Power Cutset Report

Cutsets with Descriptions Report Flooding At-Power Core Damage Frequency = 6.95E-09 Top 200 Cutsets				
#	**Cutset Prob**	**Event Prob**	**Event**	**Description**
44	1.58E-11	3.27E-03	%FL_EB-U43-S	
		1.00E+00	B32-NONCONDENSE	Non condensable gasses form in ICS sufficiently to require venting
		1.00E-04	C63-CCFSOFTWARE	Common cause failure of software
		3.00E-03	R10-LOSP-EPRI	CONSEQUENTIAL LOSS OF PREFERRED OFFSITE POWER DUE TO A TRANSIENT
		1.61E-02	R21-XHE-FO-ADG	OPERATOR FAILS TO CONTROL THE LOADS ON ANCILLARY DG BUSES
		1.00E+00	XHOS72H	HOUSE EVENT: 72 HOURS (VALUE =1)
45	1.58E-11	3.27E-03	%FL_EB-U43-S	
		1.00E-04	C63-CCFSOFTWARE	Common cause failure of software
		3.00E-03	R10-LOSP-EPRI	CONSEQUENTIAL LOSS OF PREFERRED OFFSITE POWER DUE TO A TRANSIENT
		1.61E-02	R13-XHE-FO-ADG	OPERATOR FAILS TO ALIGN THE ADG BUSES TO UPS BUSES
		1.00E+00	XHOS72H	HOUSE EVENT: 72 HOURS (VALUE =1)
46	1.58E-11	3.27E-03	%FL_EB-U43-S	
		1.00E-04	C63-CCFSOFTWARE	Common cause failure of software
		3.00E-03	R10-LOSP-EPRI	CONSEQUENTIAL LOSS OF PREFERRED OFFSITE POWER DUE TO A TRANSIENT
		1.61E-02	R21-XHE-FO-ADG	OPERATOR FAILS TO CONTROL THE LOADS ON ANCILLARY DG BUSES
		1.00E+00	XHOS72H	HOUSE EVENT: 72 HOURS (VALUE =1)
47	1.57E-11	3.27E-03	%FL_EB-U43-S	
		1.00E-04	C71-CCFSOFTWARE	RPS COMMON CAUSE SOFTWARE FAILURE
		1.00E-01	C71-XHE-FO-SCRAM	OPERATOR FAILS TO PERFORM MANUAL SCRAM
		4.80E-04	R13-INV-FC-R13C	INVERTER TO R13-C FAILS
48	1.33E-11	4.42E-03	%FL_SF-P41A-S	

Table 13.7-2

Results - Internal Flooding At-Power Cutset Report

Cutsets with Descriptions Report Flooding At-Power Core Damage Frequency = 6.95E-09 Top 200 Cutsets				
#	**Cutset Prob**	**Event Prob**	**Event**	**Description**
		3.00E-05	C63-DTM-FC-ESFLG_ALL	CCF of all components in group 'C63-DTM-FC-ESFLG'
		1.00E-04	C72-CCFSOFTWARE	COMMON CAUSE FAILURE OF DPS PROCESSORS
49	1.33E-11	4.42E-03	%FL_SF-P41B-S	
		3.00E-05	C63-DTM-FC-ESFLG_ALL	CCF of all components in group 'C63-DTM-FC-ESFLG'
		1.00E-04	C72-CCFSOFTWARE	COMMON CAUSE FAILURE OF DPS PROCESSORS
50	1.07E-11	4.30E-05	%FL_RB3-P10-L	
		2.50E-07	C12-ROD-CF-SCRAM	CCF OF CONTROL RODS TO INSERT
51	1.07E-11	4.30E-05	%FL_TB-P10-L	
		2.50E-07	C12-ROD-CF-SCRAM	CCF OF CONTROL RODS TO INSERT
52	1.07E-11	4.42E-03	%FL_SF-P41A-S	
		1.50E-04	B21-SQV-CC_ALL	CCF of all components in group 'B21-SQV-CC'
		1.00E+00	B32-NONCONDENSE	Non condensable gasses form in ICS sufficiently to require venting
		1.00E-04	C63-CCFSOFTWARE	Common cause failure of software
		1.61E-01	XXX-XHE-FO-LPMAKEUP	OP. FAILS TO RECOG. NEED FOR LOW PRESS. MAKEUP AFTER DEPRESSURIZATION
53	1.07E-11	4.42E-03	%FL_SF-P41A-S	
		1.50E-04	B21-SQV-CC_ALL	CCF of all components in group 'B21-SQV-CC'
		1.00E+00	B32-NONCONDENSE	Non condensable gasses form in ICS sufficiently to require venting
		1.00E-04	C63-CCFSOFTWARE	Common cause failure of software
		1.61E-01	XXX-XHE-FO-DEPRESS	OPERATOR FAILS TO RECOGNIZE NEED OF DEPRESSURIZATION

Table 13.7-2

Results - Internal Flooding At-Power Cutset Report

Cutsets with Descriptions Report Flooding At-Power Core Damage Frequency = 6.95E-09 Top 200 Cutsets				
#	**Cutset Prob**	**Event Prob**	**Event**	**Description**
54	1.07E-11	4.42E-03	%FL_SF-P41A-S	
		1.50E-04	B21-SQV-CC_ALL	CCF of all components in group 'B21-SQV-CC'
		1.00E-04	C63-CCFSOFTWARE_S	ESF SPURIOUS COMMON CAUSE SOFTWARE FAILURE
		1.61E-01	XXX-XHE-FO-LPMAKEUP	OP. FAILS TO RECOG. NEED FOR LOW PRESS. MAKEUP AFTER DEPRESSURIZATION
55	1.07E-11	4.42E-03	%FL_SF-P41A-S	
		1.50E-04	B21-SQV-CC_ALL	CCF of all components in group 'B21-SQV-CC'
		1.00E-04	C63-CCFSOFTWARE_S	ESF SPURIOUS COMMON CAUSE SOFTWARE FAILURE
		1.61E-01	XXX-XHE-FO-DEPRESS	OPERATOR FAILS TO RECOGNIZE NEED OF DEPRESSURIZATION
56	1.07E-11	4.42E-03	%FL_SF-P41A-S	
		1.00E+00	B32-NONCONDENSE	Non condensable gasses form in ICS sufficiently to require venting
		1.00E-04	C63-CCFSOFTWARE	Common cause failure of software
		1.50E-04	E50-SQV-CC-INJ_ALL	CCF of all components in group 'E50-SQV-CC-INJ'
		1.61E-01	XXX-XHE-FO-DEPRESS	OPERATOR FAILS TO RECOGNIZE NEED OF DEPRESSURIZATION
57	1.07E-11	4.42E-03	%FL_SF-P41A-S	
		1.00E-04	C63-CCFSOFTWARE_S	ESF SPURIOUS COMMON CAUSE SOFTWARE FAILURE
		1.50E-04	E50-SQV-CC-INJ_ALL	CCF of all components in group 'E50-SQV-CC-INJ'
		1.61E-01	XXX-XHE-FO-DEPRESS	OPERATOR FAILS TO RECOGNIZE NEED OF DEPRESSURIZATION

Table 13.7-2

Results - Internal Flooding At-Power Cutset Report

Cutsets with Descriptions Report Flooding At-Power Core Damage Frequency = 6.95E-09 Top 200 Cutsets				
#	**Cutset Prob**	**Event Prob**	**Event**	**Description**
58	1.07E-11	4.42E-03	%FL_SF-P41B-S	
		1.50E-04	B21-SQV-CC_ALL	CCF of all components in group 'B21-SQV-CC'
		1.00E+00	B32-NONCONDENSE	Non condensable gasses form in ICS sufficiently to require venting
		1.00E-04	C63-CCFSOFTWARE	Common cause failure of software
		1.61E-01	XXX-XHE-FO-LPMAKEUP	OP. FAILS TO RECOG. NEED FOR LOW PRESS. MAKEUP AFTER DEPRESSURIZATION
59	1.07E-11	4.42E-03	%FL_SF-P41B-S	
		1.50E-04	B21-SQV-CC_ALL	CCF of all components in group 'B21-SQV-CC'
		1.00E+00	B32-NONCONDENSE	Non condensable gasses form in ICS sufficiently to require venting
		1.00E-04	C63-CCFSOFTWARE	Common cause failure of software
		1.61E-01	XXX-XHE-FO-DEPRESS	OPERATOR FAILS TO RECOGNIZE NEED OF DEPRESSURIZATION
60	1.07E-11	4.42E-03	%FL_SF-P41B-S	
		1.50E-04	B21-SQV-CC_ALL	CCF of all components in group 'B21-SQV-CC'
		1.00E-04	C63-CCFSOFTWARE_S	ESF SPURIOUS COMMON CAUSE SOFTWARE FAILURE
61	1.07E-11	4.42E-03	%FL_SF-P41B-S	
		1.50E-04	B21-SQV-CC_ALL	CCF of all components in group 'B21-SQV-CC'
		1.00E-04	C63-CCFSOFTWARE_S	ESF SPURIOUS COMMON CAUSE SOFTWARE FAILURE
		1.61E-01	XXX-XHE-FO-DEPRESS	OPERATOR FAILS TO RECOGNIZE NEED OF DEPRESSURIZATION

Table 13.7-2

Results - Internal Flooding At-Power Cutset Report

Cutsets with Descriptions Report Flooding At-Power Core Damage Frequency = 6.95E-09 Top 200 Cutsets				
#	**Cutset Prob**	**Event Prob**	**Event**	**Description**
62	1.07E-11	4.42E-03	%FL_SF-P41B-S	
		1.00E+00	B32-NONCONDENSE	Non condensable gasses form in ICS sufficiently to require venting
		1.00E-04	C63-CCFSOFTWARE	Common cause failure of software
		1.50E-04	E50-SQV-CC-INJ_ALL	CCF of all components in group 'E50-SQV-CC-INJ'
		1.61E-01	XXX-XHE-FO-DEPRESS	OPERATOR FAILS TO RECOGNIZE NEED OF DEPRESSURIZATION
63	1.07E-11	4.42E-03	%FL_SF-P41B-S	
		1.00E-04	C63-CCFSOFTWARE_S	ESF SPURIOUS COMMON CAUSE SOFTWARE FAILURE
		1.50E-04	E50-SQV-CC-INJ_ALL	CCF of all components in group 'E50-SQV-CC-INJ'
		1.61E-01	XXX-XHE-FO-DEPRESS	OPERATOR FAILS TO RECOGNIZE NEED OF DEPRESSURIZATION
64	1.01E-11	1.91E-04	%FL_TB-U43-L	
		3.00E-03	B32-SQV-CC-F104A	F104A FAILS TO OPEN
		1.00E-03	B32-UV_-OO-F105A	CHECK VALVE FAILS TO CLOSE
		1.77E-02	P51-XHE-P21-BU	OPERATOR ACTION TO CONNECT ALTERNATE COOLING GIVEN RCCW FAILED
		1.00E+00	XHOS72H	HOUSE EVENT: 72 HOURS (VALUE =1)
65	1.01E-11	1.91E-04	%FL_TB-U43-L	
		3.00E-03	B32-SQV-CC-F104B	F104B FAILS TO OPEN
		1.00E-03	B32-UV_-OO-F105B	CHECK VALVE FAILS TO CLOSE
		1.77E-02	P51-XHE-P21-BU	OPERATOR ACTION TO CONNECT ALTERNATE COOLING GIVEN RCCW FAILED
		1.00E+00	XHOS72H	HOUSE EVENT: 72 HOURS (VALUE =1)

Table 13.7-2

Results - Internal Flooding At-Power Cutset Report

Cutsets with Descriptions Report Flooding At-Power Core Damage Frequency = 6.95E-09 Top 200 Cutsets				
#	**Cutset Prob**	**Event Prob**	**Event**	**Description**
66	9.81E-12	3.27E-03	%FL_EB-U43-S	
		3.00E-03	B32-SQV-CC-F104A	F104A FAILS TO OPEN
		1.00E-03	B32-UV_-OO-F105A	CHECK VALVE FAILS TO CLOSE
		1.00E-03	R10-SYS-FF-500KV	500KV SWITCHYARD FAILS DURING OPERATION
		1.00E+00	XHOS72H	HOUSE EVENT: 72 HOURS (VALUE =1)
63	1.07E-11	4.42E-03	%FL_SF-P41B-S	
		1.00E-04	C63-CCFSOFTWARE_S	ESF SPURIOUS COMMON CAUSE SOFTWARE FAILURE
		1.50E-04	E50-SQV-CC-INJ_ALL	CCF of all components in group 'E50-SQV-CC-INJ'
		1.61E-01	XXX-XHE-FO-DEPRESS	OPERATOR FAILS TO RECOGNIZE NEED OF DEPRESSURIZATION
64	1.01E-11	1.91E-04	%FL_TB-U43-L	
		3.00E-03	B32-SQV-CC-F104A	F104A FAILS TO OPEN
		1.00E-03	B32-UV_-OO-F105A	CHECK VALVE FAILS TO CLOSE
		1.77E-02	P51-XHE-P21-BU	OPERATOR ACTION TO CONNECT ALTERNATE COOLING GIVEN RCCW FAILED
		1.00E+00	XHOS72H	HOUSE EVENT: 72 HOURS (VALUE =1)
65	1.01E-11	1.91E-04	%FL_TB-U43-L	
		3.00E-03	B32-SQV-CC-F104B	F104B FAILS TO OPEN
		1.00E-03	B32-UV_-OO-F105B	CHECK VALVE FAILS TO CLOSE
		1.77E-02	P51-XHE-P21-BU	OPERATOR ACTION TO CONNECT ALTERNATE COOLING GIVEN RCCW FAILED
		1.00E+00	XHOS72H	HOUSE EVENT: 72 HOURS (VALUE =1)

Table 13.7-2

Results - Internal Flooding At-Power Cutset Report

Cutsets with Descriptions Report Flooding At-Power Core Damage Frequency = 6.95E-09 Top 200 Cutsets				
#	**Cutset Prob**	**Event Prob**	**Event**	**Description**
66	9.81E-12	3.27E-03	%FL_EB-U43-S	
		3.00E-03	B32-SQV-CC-F104A	F104A FAILS TO OPEN
		1.00E-03	B32-UV_-OO-F105A	CHECK VALVE FAILS TO CLOSE
		1.00E-03	R10-SYS-FF-500KV	500KV SWITCHYARD FAILS DURING OPERATION
		1.00E+00	XHOS72H	HOUSE EVENT: 72 HOURS (VALUE =1)
67	9.81E-12	3.27E-03	%FL_EB-U43-S	
		3.00E-03	B32-SQV-CC-F104B	F104B FAILS TO OPEN
		1.00E-03	B32-UV_-OO-F105B	CHECK VALVE FAILS TO CLOSE
		1.00E-03	R10-SYS-FF-500KV	500KV SWITCHYARD FAILS DURING OPERATION
		1.00E+00	XHOS72H	HOUSE EVENT: 72 HOURS (VALUE =1)
68	8.00E-12	4.30E-05	%FL_RB3-P10-L	
		1.00E-01	C71-XHE-FO-SCRAM	OPERATOR FAILS TO PERFORM MANUAL SCRAM
		1.86E-06	C72-LDD-FC-LOADS	COMMON CAUSE FAILURE OF DPS LOAD DRIVERS
69	7.96E-12	4.42E-03	%FL_SF-P41A-S	
		1.80E-05	C63-LOG-FC-ESFLG_ALL	CCF of all components in group 'C63-LOG-FC-ESFLG'
		1.00E-04	C72-CCFSOFTWARE	COMMON CAUSE FAILURE OF DPS PROCESSORS
70	7.96E-12	4.42E-03	%FL_SF-P41B-S	
		1.80E-05	C63-LOG-FC-ESFLG_ALL	CCF of all components in group 'C63-LOG-FC-ESFLG'
		1.00E-04	C72-CCFSOFTWARE	COMMON CAUSE FAILURE OF DPS PROCESSORS

Table 13.7-2

Results - Internal Flooding At-Power Cutset Report

Cutsets with Descriptions Report Flooding At-Power Core Damage Frequency = 6.95E-09 Top 200 Cutsets				
#	**Cutset Prob**	**Event Prob**	**Event**	**Description**
71	7.36E-12	3.27E-03	%FL_EB-U43-S	
		4.50E-05	C71-SLU-FC-R_ALL	CCF of all components in group 'C71-SLU-FC-R'
		1.00E-01	C71-XHE-FO-SCRAM	OPERATOR FAILS TO PERFORM MANUAL SCRAM
		5.00E-04	R16-BDC-TM-R16C	DC BUS R16-C IN MAINTENANCE
72	7.36E-12	3.27E-03	%FL_EB-U43-S	
		4.50E-05	C71-SLU-FC-R_ALL	CCF of all components in group 'C71-SLU-FC-R'
		1.00E-01	C71-XHE-FO-SCRAM	OPERATOR FAILS TO PERFORM MANUAL SCRAM
		5.00E-04	R16-BT_-TM-R16BTC	BATTERY R16-BTC IN TEST AND MAINTENANCE
73	7.06E-12	3.27E-03	%FL_EB-U43-S	
		4.50E-05	C71-SLU-FC-R_ALL	CCF of all components in group 'C71-SLU-FC-R'
		1.00E-01	C71-XHE-FO-SCRAM	OPERATOR FAILS TO PERFORM MANUAL SCRAM
		4.80E-04	R13-INV-FC-R13C	INVERTER TO R13-C FAILS
74	6.63E-12	4.42E-03	%FL_SF-P41A-S	
		6.00E-03	B21-SRV-OO-ANYSRV1	SAFETY/RELIEF VALVE FAILS TO RE-CLOSE
		2.50E-07	C12-ROD-CF-SCRAM	CCF OF CONTROL RODS TO INSERT
75	6.63E-12	4.42E-03	%FL_SF-P41A-S	
		6.00E-03	B21-SRV-OO-ANYSRV10	SAFETY/RELIEF VALVE FAILS TO RE-CLOSE
		2.50E-07	C12-ROD-CF-SCRAM	CCF OF CONTROL RODS TO INSERT
76	6.63E-12	4.42E-03	%FL_SF-P41A-S	
		6.00E-03	B21-SRV-OO-ANYSRV11	SAFETY/RELIEF VALVE FAILS TO RE-CLOSE
		2.50E-07	C12-ROD-CF-SCRAM	CCF OF CONTROL RODS TO INSERT

Table 13.7-2

Results - Internal Flooding At-Power Cutset Report

Cutsets with Descriptions Report Flooding At-Power Core Damage Frequency = 6.95E-09 Top 200 Cutsets				
#	**Cutset Prob**	**Event Prob**	**Event**	**Description**
77	6.63E-12	4.42E-03	%FL_SF-P41A-S	
		6.00E-03	B21-SRV-OO-ANYSRV12	SAFETY/RELIEF VALVE FAILS TO RE-CLOSE
		2.50E-07	C12-ROD-CF-SCRAM	CCF OF CONTROL RODS TO INSERT
78	6.63E-12	4.42E-03	%FL_SF-P41A-S	
		6.00E-03	B21-SRV-OO-ANYSRV13	SAFETY/RELIEF VALVE FAILS TO RE-CLOSE
		2.50E-07	C12-ROD-CF-SCRAM	CCF OF CONTROL RODS TO INSERT
79	6.63E-12	4.42E-03	%FL_SF-P41A-S	
		6.00E-03	B21-SRV-OO-ANYSRV14	SAFETY/RELIEF VALVE FAILS TO RE-CLOSE
		2.50E-07	C12-ROD-CF-SCRAM	CCF OF CONTROL RODS TO INSERT
80	6.63E-12	4.42E-03	%FL_SF-P41A-S	
		6.00E-03	B21-SRV-OO-ANYSRV15	SAFETY/RELIEF VALVE FAILS TO RE-CLOSE
		2.50E-07	C12-ROD-CF-SCRAM	CCF OF CONTROL RODS TO INSERT
81	6.63E-12	4.42E-03	%FL_SF-P41A-S	
		6.00E-03	B21-SRV-OO-ANYSRV16	SAFETY/RELIEF VALVE FAILS TO RE-CLOSE
		2.50E-07	C12-ROD-CF-SCRAM	CCF OF CONTROL RODS TO INSERT
82	6.63E-12	4.42E-03	%FL_SF-P41A-S	
		6.00E-03	B21-SRV-OO-ANYSRV17	SAFETY/RELIEF VALVE FAILS TO RE-CLOSE
		2.50E-07	C12-ROD-CF-SCRAM	CCF OF CONTROL RODS TO INSERT
83	6.63E-12	4.42E-03	%FL_SF-P41A-S	
		6.00E-03	B21-SRV-OO-ANYSRV18	SAFETY/RELIEF VALVE FAILS TO RE-CLOSE
		2.50E-07	C12-ROD-CF-SCRAM	CCF OF CONTROL RODS TO INSERT

Table 13.7-2

Results - Internal Flooding At-Power Cutset Report

Cutsets with Descriptions Report Flooding At-Power Core Damage Frequency = 6.95E-09 Top 200 Cutsets				
#	**Cutset Prob**	**Event Prob**	**Event**	**Description**
84	6.63E-12	4.42E-03	%FL_SF-P41A-S	
		6.00E-03	B21-SRV-OO-ANYSRV2	SAFETY/RELIEF VALVE FAILS TO RE-CLOSE
		2.50E-07	C12-ROD-CF-SCRAM	CCF OF CONTROL RODS TO INSERT
85	6.63E-12	4.42E-03	%FL_SF-P41A-S	
		6.00E-03	B21-SRV-OO-ANYSRV3	SAFETY/RELIEF VALVE FAILS TO RE-CLOSE
		2.50E-07	C12-ROD-CF-SCRAM	CCF OF CONTROL RODS TO INSERT
86	6.63E-12	4.42E-03	%FL_SF-P41A-S	
		6.00E-03	B21-SRV-OO-ANYSRV4	SAFETY/RELIEF VALVE FAILS TO RE-CLOSE
		2.50E-07	C12-ROD-CF-SCRAM	CCF OF CONTROL RODS TO INSERT
87	6.63E-12	4.42E-03	%FL_SF-P41A-S	
		6.00E-03	B21-SRV-OO-ANYSRV5	SAFETY/RELIEF VALVE FAILS TO RE-CLOSE
		2.50E-07	C12-ROD-CF-SCRAM	CCF OF CONTROL RODS TO INSERT
88	6.63E-12	4.42E-03	%FL_SF-P41A-S	
		6.00E-03	B21-SRV-OO-ANYSRV6	SAFETY/RELIEF VALVE FAILS TO RE-CLOSE
		2.50E-07	C12-ROD-CF-SCRAM	CCF OF CONTROL RODS TO INSERT
89	6.63E-12	4.42E-03	%FL_SF-P41A-S	
		6.00E-03	B21-SRV-OO-ANYSRV7	SAFETY/RELIEF VALVE FAILS TO RE-CLOSE
		2.50E-07	C12-ROD-CF-SCRAM	CCF OF CONTROL RODS TO INSERT
90	6.63E-12	4.42E-03	%FL_SF-P41A-S	
		6.00E-03	B21-SRV-OO-ANYSRV8	SAFETY/RELIEF VALVE FAILS TO RE-CLOSE
		2.50E-07	C12-ROD-CF-SCRAM	CCF OF CONTROL RODS TO INSERT

Table 13.7-2

Results - Internal Flooding At-Power Cutset Report

Cutsets with Descriptions Report Flooding At-Power Core Damage Frequency = 6.95E-09 Top 200 Cutsets				
#	**Cutset Prob**	**Event Prob**	**Event**	**Description**
91	6.63E-12	4.42E-03	%FL_SF-P41A-S	
		6.00E-03	B21-SRV-OO-ANYSRV9	SAFETY/RELIEF VALVE FAILS TO RE-CLOSE
		2.50E-07	C12-ROD-CF-SCRAM	CCF OF CONTROL RODS TO INSERT
92	6.63E-12	4.42E-03	%FL_SF-P41B-S	
		6.00E-03	B21-SRV-OO-ANYSRV1	SAFETY/RELIEF VALVE FAILS TO RE-CLOSE
		2.50E-07	C12-ROD-CF-SCRAM	CCF OF CONTROL RODS TO INSERT
93	6.63E-12	4.42E-03	%FL_SF-P41B-S	
		6.00E-03	B21-SRV-OO-ANYSRV10	SAFETY/RELIEF VALVE FAILS TO RE-CLOSE
		2.50E-07	C12-ROD-CF-SCRAM	CCF OF CONTROL RODS TO INSERT
94	6.63E-12	4.42E-03	%FL_SF-P41B-S	
		6.00E-03	B21-SRV-OO-ANYSRV11	SAFETY/RELIEF VALVE FAILS TO RE-CLOSE
		2.50E-07	C12-ROD-CF-SCRAM	CCF OF CONTROL RODS TO INSERT
95	6.63E-12	4.42E-03	%FL_SF-P41B-S	
		6.00E-03	B21-SRV-OO-ANYSRV12	SAFETY/RELIEF VALVE FAILS TO RE-CLOSE
		2.50E-07	C12-ROD-CF-SCRAM	CCF OF CONTROL RODS TO INSERT
96	6.63E-12	4.42E-03	%FL_SF-P41B-S	
		6.00E-03	B21-SRV-OO-ANYSRV13	SAFETY/RELIEF VALVE FAILS TO RE-CLOSE
		2.50E-07	C12-ROD-CF-SCRAM	CCF OF CONTROL RODS TO INSERT
97	6.63E-12	4.42E-03	%FL_SF-P41B-S	
		6.00E-03	B21-SRV-OO-ANYSRV14	SAFETY/RELIEF VALVE FAILS TO RE-CLOSE
		2.50E-07	C12-ROD-CF-SCRAM	CCF OF CONTROL RODS TO INSERT

Table 13.7-2

Results - Internal Flooding At-Power Cutset Report

Cutsets with Descriptions Report Flooding At-Power Core Damage Frequency = 6.95E-09 Top 200 Cutsets				
#	**Cutset Prob**	**Event Prob**	**Event**	**Description**
98	6.63E-12	4.42E-03	%FL_SF-P41B-S	
		6.00E-03	B21-SRV-OO-ANYSRV15	SAFETY/RELIEF VALVE FAILS TO RE-CLOSE
		2.50E-07	C12-ROD-CF-SCRAM	CCF OF CONTROL RODS TO INSERT
99	6.63E-12	4.42E-03	%FL_SF-P41B-S	
		6.00E-03	B21-SRV-OO-ANYSRV16	SAFETY/RELIEF VALVE FAILS TO RE-CLOSE
		2.50E-07	C12-ROD-CF-SCRAM	CCF OF CONTROL RODS TO INSERT
95	6.63E-12	4.42E-03	%FL_SF-P41B-S	
		6.00E-03	B21-SRV-OO-ANYSRV12	SAFETY/RELIEF VALVE FAILS TO RE-CLOSE
		2.50E-07	C12-ROD-CF-SCRAM	CCF OF CONTROL RODS TO INSERT
96	6.63E-12	4.42E-03	%FL_SF-P41B-S	
		6.00E-03	B21-SRV-OO-ANYSRV13	SAFETY/RELIEF VALVE FAILS TO RE-CLOSE
		2.50E-07	C12-ROD-CF-SCRAM	CCF OF CONTROL RODS TO INSERT
97	6.63E-12	4.42E-03	%FL_SF-P41B-S	
		6.00E-03	B21-SRV-OO-ANYSRV14	SAFETY/RELIEF VALVE FAILS TO RE-CLOSE
		2.50E-07	C12-ROD-CF-SCRAM	CCF OF CONTROL RODS TO INSERT
98	6.63E-12	4.42E-03	%FL_SF-P41B-S	
		6.00E-03	B21-SRV-OO-ANYSRV15	SAFETY/RELIEF VALVE FAILS TO RE-CLOSE
		2.50E-07	C12-ROD-CF-SCRAM	CCF OF CONTROL RODS TO INSERT
99	6.63E-12	4.42E-03	%FL_SF-P41B-S	
		6.00E-03	B21-SRV-OO-ANYSRV16	SAFETY/RELIEF VALVE FAILS TO RE-CLOSE
		2.50E-07	C12-ROD-CF-SCRAM	CCF OF CONTROL RODS TO INSERT

Table 13.7-2

Results - Internal Flooding At-Power Cutset Report

Cutsets with Descriptions Report Flooding At-Power Core Damage Frequency = 6.95E-09 Top 200 Cutsets				
#	**Cutset Prob**	**Event Prob**	**Event**	**Description**
95	6.63E-12	4.42E-03	%FL_SF-P41B-S	
		6.00E-03	B21-SRV-OO-ANYSRV12	SAFETY/RELIEF VALVE FAILS TO RE-CLOSE
		2.50E-07	C12-ROD-CF-SCRAM	CCF OF CONTROL RODS TO INSERT
100	6.63E-12	4.42E-03	%FL_SF-P41B-S	
		6.00E-03	B21-SRV-OO-ANYSRV17	SAFETY/RELIEF VALVE FAILS TO RE-CLOSE
		2.50E-07	C12-ROD-CF-SCRAM	CCF OF CONTROL RODS TO INSERT
101	6.63E-12	4.42E-03	%FL_SF-P41B-S	
		6.00E-03	B21-SRV-OO-ANYSRV18	SAFETY/RELIEF VALVE FAILS TO RE-CLOSE
		2.50E-07	C12-ROD-CF-SCRAM	CCF OF CONTROL RODS TO INSERT
102	6.63E-12	4.42E-03	%FL_SF-P41B-S	
		6.00E-03	B21-SRV-OO-ANYSRV2	SAFETY/RELIEF VALVE FAILS TO RE-CLOSE
		2.50E-07	C12-ROD-CF-SCRAM	CCF OF CONTROL RODS TO INSERT
103	6.63E-12	4.42E-03	%FL_SF-P41B-S	
		6.00E-03	B21-SRV-OO-ANYSRV3	SAFETY/RELIEF VALVE FAILS TO RE-CLOSE
		2.50E-07	C12-ROD-CF-SCRAM	CCF OF CONTROL RODS TO INSERT
104	6.63E-12	4.42E-03	%FL_SF-P41B-S	
		6.00E-03	B21-SRV-OO-ANYSRV4	SAFETY/RELIEF VALVE FAILS TO RE-CLOSE
		2.50E-07	C12-ROD-CF-SCRAM	CCF OF CONTROL RODS TO INSERT
105	6.63E-12	4.42E-03	%FL_SF-P41B-S	
		6.00E-03	B21-SRV-OO-ANYSRV5	SAFETY/RELIEF VALVE FAILS TO RE-CLOSE
		2.50E-07	C12-ROD-CF-SCRAM	CCF OF CONTROL RODS TO INSERT

Table 13.7-2

Results - Internal Flooding At-Power Cutset Report

Cutsets with Descriptions Report Flooding At-Power Core Damage Frequency = 6.95E-09 Top 200 Cutsets				
#	**Cutset Prob**	**Event Prob**	**Event**	**Description**
106	6.63E-12	4.42E-03	%FL_SF-P41B-S	
		6.00E-03	B21-SRV-OO-ANYSRV6	SAFETY/RELIEF VALVE FAILS TO RE-CLOSE
		2.50E-07	C12-ROD-CF-SCRAM	CCF OF CONTROL RODS TO INSERT
107	6.63E-12	4.42E-03	%FL_SF-P41B-S	
		6.00E-03	B21-SRV-OO-ANYSRV7	SAFETY/RELIEF VALVE FAILS TO RE-CLOSE
		2.50E-07	C12-ROD-CF-SCRAM	CCF OF CONTROL RODS TO INSERT
108	6.63E-12	4.42E-03	%FL_SF-P41B-S	
		6.00E-03	B21-SRV-OO-ANYSRV8	SAFETY/RELIEF VALVE FAILS TO RE-CLOSE
		2.50E-07	C12-ROD-CF-SCRAM	CCF OF CONTROL RODS TO INSERT
109	6.63E-12	4.42E-03	%FL_SF-P41B-S	
		6.00E-03	B21-SRV-OO-ANYSRV9	SAFETY/RELIEF VALVE FAILS TO RE-CLOSE
		2.50E-07	C12-ROD-CF-SCRAM	CCF OF CONTROL RODS TO INSERT
110	6.37E-12	1.91E-04	%FL_TB-U43-L	
		1.00E-04	B32-NPO-CC-F105A	F105A Fails to Open
		3.33E-04	B32-SQV-CC-XCONN_1_2	CCF of two components: B32-SQV-CC-F104A & B32-SQV-CC-F104B
		1.00E+00	XHOS72H	HOUSE EVENT: 72 HOURS (VALUE =1)
111	6.37E-12	1.91E-04	%FL_TB-U43-L	
		1.00E-04	B32-NPO-CC-F105B	F105B fails to open
		3.33E-04	B32-SQV-CC-XCONN_1_2	CCF of two components: B32-SQV-CC-F104A & B32-SQV-CC-F104B
		1.00E+00	XHOS72H	HOUSE EVENT: 72 HOURS (VALUE =1)

Table 13.7-2

Results - Internal Flooding At-Power Cutset Report

Cutsets with Descriptions Report Flooding At-Power Core Damage Frequency = 6.95E-09 Top 200 Cutsets				
#	**Cutset Prob**	**Event Prob**	**Event**	**Description**
112	5.93E-12	5.93E-04	%FL_TB2-N11-L	
		1.00E-04	C63-CCFSOFTWARE	Common cause failure of software
		1.00E-04	C72-CCFSOFTWARE	COMMON CAUSE FAILURE OF DPS PROCESSORS
113	5.93E-12	2.37E-05	%FL_TB-1-P10-L	
		2.50E-07	C12-ROD-CF-SCRAM	CCF OF CONTROL RODS TO INSERT
114	5.92E-12	5.92E-04	%FL_TB-N21-L	
		1.00E-04	C63-CCFSOFTWARE	Common cause failure of software
		1.00E-04	C72-CCFSOFTWARE	COMMON CAUSE FAILURE OF DPS PROCESSORS
115	5.82E-12	5.82E-04	%FL_TB-P41A-L	
		1.00E-04	C63-CCFSOFTWARE	Common cause failure of software
		1.00E-04	C72-CCFSOFTWARE	COMMON CAUSE FAILURE OF DPS PROCESSORS
116	5.82E-12	5.82E-04	%FL_TB-P41B-L	
		1.00E-04	C63-CCFSOFTWARE	Common cause failure of software
		1.00E-04	C72-CCFSOFTWARE	COMMON CAUSE FAILURE OF DPS PROCESSORS
117	5.53E-12	1.91E-04	%FL_TB-U43-L	
		9.65E-06	B32-NPO-CC-XCONN_1_2	CCF of two components: B32-NPO-CC-F105A & B32-NPO-CC-F105B
		3.00E-03	B32-SQV-CC-F104A	F104A FAILS TO OPEN
		1.00E+00	XHOS72H	HOUSE EVENT: 72 HOURS (VALUE =1)

Table 13.7-2

Results - Internal Flooding At-Power Cutset Report

Cutsets with Descriptions Report Flooding At-Power Core Damage Frequency = 6.95E-09 Top 200 Cutsets				
#	**Cutset Prob**	**Event Prob**	**Event**	**Description**
118	5.53E-12	1.91E-04	%FL_TB-U43-L	
		9.65E-06	B32-NPO-CC-XCONN_1_2	CCF of two components: B32-NPO-CC-F105A & B32-NPO-CC-F105B
		3.00E-03	B32-SQV-CC-F104B	F104B FAILS TO OPEN
		1.00E+00	XHOS72H	HOUSE EVENT: 72 HOURS (VALUE =1)
119	5.33E-12	5.33E-04	%FL_SF-P41A-L	
		1.00E-04	C63-CCFSOFTWARE	Common cause failure of software
		1.00E-04	C72-CCFSOFTWARE	COMMON CAUSE FAILURE OF DPS PROCESSORS
120	5.33E-12	5.33E-04	%FL_SF-P41B-L	
		1.00E-04	C63-CCFSOFTWARE	Common cause failure of software
		1.00E-04	C72-CCFSOFTWARE	COMMON CAUSE FAILURE OF DPS PROCESSORS
121	5.03E-12	4.42E-03	%FL_SF-P41A-S	
		1.00E-04	C63-CCFSOFTWARE	Common cause failure of software
		1.14E-05	R13-INV-FC-CCFNSR_ALL	CCF of all components in group 'R13-INV-FC-CCFNSR'
122	5.03E-12	4.42E-03	%FL_SF-P41B-S	
		1.00E-04	C63-CCFSOFTWARE	Common cause failure of software
		1.14E-05	R13-INV-FC-CCFNSR_ALL	CCF of all components in group 'R13-INV-FC-CCFNSR'

Table 13.7-2

Results - Internal Flooding At-Power Cutset Report

Cutsets with Descriptions Report Flooding At-Power Core Damage Frequency = 6.95E-09 Top 200 Cutsets				
#	**Cutset Prob**	**Event Prob**	**Event**	**Description**
123	4.91E-12	3.27E-03	%FL_EB-U43-S	
		3.00E-05	C71-DTM-FC-R_ALL	CCF of all components in group 'C71-DTM-FC-R'
		1.00E-01	C71-XHE-FO-SCRAM	OPERATOR FAILS TO PERFORM MANUAL SCRAM
		5.00E-04	R16-BDC-TM-R16C	DC BUS R16-C IN MAINTENANCE
124	4.91E-12	3.27E-03	%FL_EB-U43-S	
		3.00E-05	C71-DTM-FC-R_ALL	CCF of all components in group 'C71-DTM-FC-R'
		1.00E-01	C71-XHE-FO-SCRAM	OPERATOR FAILS TO PERFORM MANUAL SCRAM
		5.00E-04	R16-BT_-TM-R16BTC	BATTERY R16-BTC IN TEST AND MAINTENANCE
125	4.82E-12	6.02E-05	%FL_TB1-U43-L	
		3.00E-03	B32-SQV-CC-F104A	F104A FAILS TO OPEN
		2.67E-05	B32-UV_-OO-XCONN-ACC_1_2	CCF of two components: B32-UV_-OO-F105A & B32-UV_-OO-F105B
		1.00E+00	XHOS72H	HOUSE EVENT: 72 HOURS (VALUE =1)
126	4.82E-12	6.02E-05	%FL_TB1-U43-L	
		3.00E-03	B32-SQV-CC-F104B	F104B FAILS TO OPEN
		2.67E-05	B32-UV_-OO-XCONN-ACC_1_2	CCF of two components: B32-UV_-OO-F105A & B32-UV_-OO-F105B
		1.00E+00	XHOS72H	HOUSE EVENT: 72 HOURS (VALUE =1)
127	4.71E-12	3.27E-03	%FL_EB-U43-S	
		3.00E-05	C71-DTM-FC-R_ALL	CCF of all components in group 'C71-DTM-FC-R'
		1.00E-01	C71-XHE-FO-SCRAM	OPERATOR FAILS TO PERFORM MANUAL SCRAM
		4.80E-04	R13-INV-FC-R13C	INVERTER TO R13-C FAILS

Table 13.7-2

Results - Internal Flooding At-Power Cutset Report

Cutsets with Descriptions Report Flooding At-Power Core Damage Frequency = 6.95E-09 Top 200 Cutsets				
#	**Cutset Prob**	**Event Prob**	**Event**	**Description**
128	4.68E-12	4.68E-04	%FL_SF-Y41-S	
		1.00E-04	C63-CCFSOFTWARE	Common cause failure of software
		1.00E-04	C72-CCFSOFTWARE	COMMON CAUSE FAILURE OF DPS PROCESSORS
129	4.42E-12	4.42E-03	%FL_SF-P41A-S	
		1.00E-04	C63-CCFSOFTWARE	Common cause failure of software
		1.00E-05	C72-LOG-FC-D_1_2	CCF of two components: C72-LOG-FC-D1DPS & C72-LOG-FC-D2DPS
130	4.42E-12	4.42E-03	%FL_SF-P41A-S	
		1.00E-04	C63-CCFSOFTWARE	Common cause failure of software
		1.00E-05	C72-LOG-FC-D_1_3	CCF of two components: C72-LOG-FC-D1DPS & C72-LOG-FC-D3DPS
131	4.42E-12	4.42E-03	%FL_SF-P41A-S	
		1.00E-04	C63-CCFSOFTWARE	Common cause failure of software
		1.00E-05	C72-LOG-FC-D_2_3	CCF of two components: C72-LOG-FC-D2DPS & C72-LOG-FC-D3DPS
132	4.42E-12	4.42E-03	%FL_SF-P41B-S	
		1.00E-04	C63-CCFSOFTWARE	Common cause failure of software
		1.00E-05	C72-LOG-FC-D_1_2	CCF of two components: C72-LOG-FC-D1DPS & C72-LOG-FC-D2DPS
133	4.42E-12	4.42E-03	%FL_SF-P41B-S	
		1.00E-04	C63-CCFSOFTWARE	Common cause failure of software
		1.00E-05	C72-LOG-FC-D_1_3	CCF of two components: C72-LOG-FC-D1DPS & C72-LOG-FC-D3DPS
134	4.42E-12	4.42E-03	%FL_SF-P41B-S	
		1.00E-04	C63-CCFSOFTWARE	Common cause failure of software
		1.00E-05	C72-LOG-FC-D_2_3	CCF of two components: C72-LOG-FC-D2DPS & C72-LOG-FC-D3DPS

Table 13.7-2

Results - Internal Flooding At-Power Cutset Report

Cutsets with Descriptions Report Flooding At-Power Core Damage Frequency = 6.95E-09 Top 200 Cutsets				
#	**Cutset Prob**	**Event Prob**	**Event**	**Description**
135	4.35E-12	8.20E-05	%FL_TB2-U43-L	
		3.00E-03	B32-SQV-CC-F104A	F104A FAILS TO OPEN
		1.00E-03	B32-UV_-OO-F105A	CHECK VALVE FAILS TO CLOSE
		1.77E-02	P51-XHE-P21-BU	OPERATOR ACTION TO CONNECT ALTERNATE COOLING GIVEN RCCW FAILED
		1.00E+00	XHOS72H	HOUSE EVENT: 72 HOURS (VALUE =1)
136	4.35E-12	8.20E-05	%FL_TB2-U43-L	
		3.00E-03	B32-SQV-CC-F104B	F104B FAILS TO OPEN
		1.00E-03	B32-UV_-OO-F105B	CHECK VALVE FAILS TO CLOSE
		1.77E-02	P51-XHE-P21-BU	OPERATOR ACTION TO CONNECT ALTERNATE COOLING GIVEN RCCW FAILED
		1.00E+00	XHOS72H	HOUSE EVENT: 72 HOURS (VALUE =1)
137	4.33E-12	6.02E-05	%FL_TB1-U43-L	
		3.00E-03	B32-SQV-CC-F104A	F104A FAILS TO OPEN
		2.40E-05	B32-UV_-RL-F105A	CHECK VALVE REVERSE LEAKAGE
		1.00E+00	XHOS72H	HOUSE EVENT: 72 HOURS (VALUE =1)
138	4.33E-12	6.02E-05	%FL_TB1-U43-L	
		3.00E-03	B32-SQV-CC-F104B	F104B FAILS TO OPEN
		2.40E-05	B32-UV_-RL-F105B	CHECK VALVE REVERSE LEAKAGE
		1.00E+00	XHOS72H	HOUSE EVENT: 72 HOURS (VALUE =1)

Table 13.7-2

Results - Internal Flooding At-Power Cutset Report

Cutsets with Descriptions Report Flooding At-Power Core Damage Frequency = 6.95E-09 Top 200 Cutsets				
#	**Cutset Prob**	**Event Prob**	**Event**	**Description**
139	4.32E-12	1.79E-03	%FL_TBC-B21B-S	
		1.00E-04	C63-CCFSOFTWARE_S	ESF SPURIOUS COMMON CAUSE SOFTWARE FAILURE
		1.50E-04	E50-SQV-CC-INJ_ALL	CCF of all components in group 'E50-SQV-CC-INJ'
		1.61E-01	XXX-XHE-FO-DEPRESS	OPERATOR FAILS TO RECOGNIZE NEED OF DEPRESSURIZATION
140	4.32E-12	1.79E-03	%FL_TBC-B21B-S	
		1.00E-04	C63-CCFSOFTWARE_S	ESF SPURIOUS COMMON CAUSE SOFTWARE FAILURE
		1.50E-04	E50-SQV-CC-INJ_ALL	CCF of all components in group 'E50-SQV-CC-INJ'
		1.61E-01	XXX-XHE-FO-LPMAKEUP	OP. FAILS TO RECOG. NEED FOR LOW PRESS. MAKEUP AFTER DEPRESSURIZATION
141	4.30E-12	4.30E-04	%FL_SF-P10-S	
		1.00E-04	C63-CCFSOFTWARE	Common cause failure of software
		1.00E-04	C72-CCFSOFTWARE	COMMON CAUSE FAILURE OF DPS PROCESSORS
142	4.26E-12	1.79E-03	%FL_TBC-B21B-S	
		2.38E-05	B21-SQV-CC_1_2	CCF of two components: B21-SQV-CC-F004A & B21-SQV-CC-F004B
		1.00E-04	C63-CCFSOFTWARE_S	ESF SPURIOUS COMMON CAUSE SOFTWARE FAILURE
143	4.26E-12	1.79E-03	%FL_TBC-B21B-S	
		2.38E-05	B21-SQV-CC_1_3	CCF of two components: B21-SQV-CC-F004A & B21-SQV-CC-F004C
		1.00E-04	C63-CCFSOFTWARE_S	ESF SPURIOUS COMMON CAUSE SOFTWARE FAILURE
144	4.26E-12	1.79E-03	%FL_TBC-B21B-S	
		2.38E-05	B21-SQV-CC_1_4	CCF of two components: B21-SQV-CC-F004A & B21-SQV-CC-F004D
		1.00E-04	C63-CCFSOFTWARE_S	ESF SPURIOUS COMMON CAUSE SOFTWARE FAILURE

Table 13.7-2

Results - Internal Flooding At-Power Cutset Report

Cutsets with Descriptions Report Flooding At-Power Core Damage Frequency = 6.95E-09 Top 200 Cutsets				
#	**Cutset Prob**	**Event Prob**	**Event**	**Description**
145	4.26E-12	1.79E-03	%FL_TBC-B21B-S	
		2.38E-05	B21-SQV-CC_1_5	CCF of two components: B21-SQV-CC-F004A & B21-SQV-CC-F004E
		1.00E-04	C63-CCFSOFTWARE_S	ESF SPURIOUS COMMON CAUSE SOFTWARE FAILURE
146	4.26E-12	1.79E-03	%FL_TBC-B21B-S	
		2.38E-05	B21-SQV-CC_1_6	CCF of two components: B21-SQV-CC-F004A & B21-SQV-CC-F004F
		1.00E-04	C63-CCFSOFTWARE_S	ESF SPURIOUS COMMON CAUSE SOFTWARE FAILURE
147	4.26E-12	1.79E-03	%FL_TBC-B21B-S	
		2.38E-05	B21-SQV-CC_1_7	CCF of two components: B21-SQV-CC-F004A & B21-SQV-CC-F004G
		1.00E-04	C63-CCFSOFTWARE_S	ESF SPURIOUS COMMON CAUSE SOFTWARE FAILURE
148	4.26E-12	1.79E-03	%FL_TBC-B21B-S	
		2.38E-05	B21-SQV-CC_1_8	CCF of two components: B21-SQV-CC-F004A & B21-SQV-CC-F004H
		1.00E-04	C63-CCFSOFTWARE_S	ESF SPURIOUS COMMON CAUSE SOFTWARE FAILURE
149	4.26E-12	1.79E-03	%FL_TBC-B21B-S	
		2.38E-05	B21-SQV-CC_2_3	CCF of two components: B21-SQV-CC-F004B & B21-SQV-CC-F004C
		1.00E-04	C63-CCFSOFTWARE_S	ESF SPURIOUS COMMON CAUSE SOFTWARE FAILURE
150	4.26E-12	1.79E-03	%FL_TBC-B21B-S	
		2.38E-05	B21-SQV-CC_2_4	CCF of two components: B21-SQV-CC-F004B & B21-SQV-CC-F004D
		1.00E-04	C63-CCFSOFTWARE_S	ESF SPURIOUS COMMON CAUSE SOFTWARE FAILURE
151	4.26E-12	1.79E-03	%FL_TBC-B21B-S	
		2.38E-05	B21-SQV-CC_2_5	CCF of two components: B21-SQV-CC-F004B & B21-SQV-CC-F004E
		1.00E-04	C63-CCFSOFTWARE_S	ESF SPURIOUS COMMON CAUSE SOFTWARE FAILURE

Table 13.7-2

Results - Internal Flooding At-Power Cutset Report

Cutsets with Descriptions Report Flooding At-Power Core Damage Frequency = 6.95E-09 Top 200 Cutsets				
#	**Cutset Prob**	**Event Prob**	**Event**	**Description**
152	4.26E-12	1.79E-03	%FL_TBC-B21B-S	
		2.38E-05	B21-SQV-CC_2_6	CCF of two components: B21-SQV-CC-F004B & B21-SQV-CC-F004F
		1.00E-04	C63-CCFSOFTWARE_S	ESF SPURIOUS COMMON CAUSE SOFTWARE FAILURE
153	4.26E-12	1.79E-03	%FL_TBC-B21B-S	
		2.38E-05	B21-SQV-CC_2_7	CCF of two components: B21-SQV-CC-F004B & B21-SQV-CC-F004G
		1.00E-04	C63-CCFSOFTWARE_S	ESF SPURIOUS COMMON CAUSE SOFTWARE FAILURE
154	4.26E-12	1.79E-03	%FL_TBC-B21B-S	
		2.38E-05	B21-SQV-CC_2_8	CCF of two components: B21-SQV-CC-F004B & B21-SQV-CC-F004H
		1.00E-04	C63-CCFSOFTWARE_S	ESF SPURIOUS COMMON CAUSE SOFTWARE FAILURE
155	4.26E-12	1.79E-03	%FL_TBC-B21B-S	
		2.38E-05	B21-SQV-CC_3_4	CCF of two components: B21-SQV-CC-F004C & B21-SQV-CC-F004D
		1.00E-04	C63-CCFSOFTWARE_S	ESF SPURIOUS COMMON CAUSE SOFTWARE FAILURE
156	4.26E-12	1.79E-03	%FL_TBC-B21B-S	
		2.38E-05	B21-SQV-CC_3_5	CCF of two components: B21-SQV-CC-F004C & B21-SQV-CC-F004E
		1.00E-04	C63-CCFSOFTWARE_S	ESF SPURIOUS COMMON CAUSE SOFTWARE FAILURE
157	4.26E-12	1.79E-03	%FL_TBC-B21B-S	
		2.38E-05	B21-SQV-CC_3_6	CCF of two components: B21-SQV-CC-F004C & B21-SQV-CC-F004F
		1.00E-04	C63-CCFSOFTWARE_S	ESF SPURIOUS COMMON CAUSE SOFTWARE FAILURE
158	4.26E-12	1.79E-03	%FL_TBC-B21B-S	
		2.38E-05	B21-SQV-CC_3_7	CCF of two components: B21-SQV-CC-F004C & B21-SQV-CC-F004G
		1.00E-04	C63-CCFSOFTWARE_S	ESF SPURIOUS COMMON CAUSE SOFTWARE FAILURE

Table 13.7-2

Results - Internal Flooding At-Power Cutset Report

Cutsets with Descriptions Report Flooding At-Power Core Damage Frequency = 6.95E-09 Top 200 Cutsets				
#	**Cutset Prob**	**Event Prob**	**Event**	**Description**
159	4.26E-12	1.79E-03	%FL_TBC-B21B-S	
		2.38E-05	B21-SQV-CC_3_8	CCF of two components: B21-SQV-CC-F004C & B21-SQV-CC-F004H
		1.00E-04	C63-CCFSOFTWARE_S	ESF SPURIOUS COMMON CAUSE SOFTWARE FAILURE
160	4.26E-12	1.79E-03	%FL_TBC-B21B-S	
		2.38E-05	B21-SQV-CC_4_5	CCF of two components: B21-SQV-CC-F004D & B21-SQV-CC-F004E
		1.00E-04	C63-CCFSOFTWARE_S	ESF SPURIOUS COMMON CAUSE SOFTWARE FAILURE
161	4.26E-12	1.79E-03	%FL_TBC-B21B-S	
		2.38E-05	B21-SQV-CC_4_6	CCF of two components: B21-SQV-CC-F004D & B21-SQV-CC-F004F
		1.00E-04	C63-CCFSOFTWARE_S	ESF SPURIOUS COMMON CAUSE SOFTWARE FAILURE
162	4.26E-12	1.79E-03	%FL_TBC-B21B-S	
		2.38E-05	B21-SQV-CC_4_7	CCF of two components: B21-SQV-CC-F004D & B21-SQV-CC-F004G
		1.00E-04	C63-CCFSOFTWARE_S	ESF SPURIOUS COMMON CAUSE SOFTWARE FAILURE
163	4.26E-12	1.79E-03	%FL_TBC-B21B-S	
		2.38E-05	B21-SQV-CC_4_8	CCF of two components: B21-SQV-CC-F004D & B21-SQV-CC-F004H
		1.00E-04	C63-CCFSOFTWARE_S	ESF SPURIOUS COMMON CAUSE SOFTWARE FAILURE
164	3.27E-12	3.27E-03	%FL_EB-U43-S	
		1.00E-04	C71-CCFSOFTWARE	RPS COMMON CAUSE SOFTWARE FAILURE
		1.00E-01	C71-XHE-FO-SCRAM	OPERATOR FAILS TO PERFORM MANUAL SCRAM
		1.00E-04	C72-CCFSOFTWARE	COMMON CAUSE FAILURE OF DPS PROCESSORS

Table 13.7-2

Results - Internal Flooding At-Power Cutset Report

Cutsets with Descriptions Report Flooding At-Power Core Damage Frequency = 6.95E-09 Top 200 Cutsets				
#	**Cutset Prob**	**Event Prob**	**Event**	**Description**
165	3.27E-12	3.27E-03	%FL_EB-U43-S	
		3.33E-04	B32-SQV-CC-XCONN_1_2	CCF of two components: B32-SQV-CC-F104A & B32-SQV-CC-F104B
		1.00E-03	B32-UV_-OO-F105A	CHECK VALVE FAILS TO CLOSE
		3.00E-03	R10-LOSP-EPRI	CONSEQUENTIAL LOSS OF PREFERRED OFFSITE POWER DUE TO A TRANSIENT
		1.00E+00	XHOS72H	HOUSE EVENT: 72 HOURS (VALUE =1)
166	3.27E-12	3.27E-03	%FL_EB-U43-S	
		3.33E-04	B32-SQV-CC-XCONN_1_2	CCF of two components: B32-SQV-CC-F104A & B32-SQV-CC-F104B
		1.00E-03	B32-UV_-OO-F105B	CHECK VALVE FAILS TO CLOSE
		3.00E-03	R10-LOSP-EPRI	CONSEQUENTIAL LOSS OF PREFERRED OFFSITE POWER DUE TO A TRANSIENT
		1.00E+00	XHOS72H	HOUSE EVENT: 72 HOURS (VALUE =1)
167	3.07E-12	3.27E-03	%FL_EB-U43-S	
		1.00E+00	B32-NONCONDENSE	Non condensable gasses form in ICS sufficiently to require venting
		1.00E-04	C63-CCFSOFTWARE	Common cause failure of software
		3.00E-03	R10-LOSP-EPRI	CONSEQUENTIAL LOSS OF PREFERRED OFFSITE POWER DUE TO A TRANSIENT
		5.60E-02	R21-DG_-FR-ADGA	ADG-A FAILS TO RUN
		5.60E-02	R21-DG_-FR-ADGB	DIESEL GENERATOR FAILS TO RUN
		1.00E+00	XHOS72H	HOUSE EVENT: 72 HOURS (VALUE =1)

Table 13.7-2

Results - Internal Flooding At-Power Cutset Report

Cutsets with Descriptions Report Flooding At-Power Core Damage Frequency = 6.95E-09 Top 200 Cutsets				
#	**Cutset Prob**	**Event Prob**	**Event**	**Description**
168	3.07E-12	3.27E-03	%FL_EB-U43-S	
		1.00E-04	C63-CCFSOFTWARE	Common cause failure of software
		3.00E-03	R10-LOSP-EPRI	CONSEQUENTIAL LOSS OF PREFERRED OFFSITE POWER DUE TO A TRANSIENT
		5.60E-02	R21-DG_-FR-ADGA	ADG-A FAILS TO RUN
		5.60E-02	R21-DG_-FR-ADGB	DIESEL GENERATOR FAILS TO RUN
		1.00E+00	XHOS72H	HOUSE EVENT: 72 HOURS (VALUE =1)
169	2.94E-12	3.27E-04	%FL_EB-U43-L	
		3.00E-03	B32-SQV-CC-F104A	F104A FAILS TO OPEN
		1.00E-03	B32-UV_-OO-F105A	CHECK VALVE FAILS TO CLOSE
		3.00E-03	R10-LOSP-EPRI	CONSEQUENTIAL LOSS OF PREFERRED OFFSITE POWER DUE TO A TRANSIENT
		1.00E+00	XHOS72H	HOUSE EVENT: 72 HOURS (VALUE =1)
170	2.94E-12	3.27E-04	%FL_EB-U43-L	
		3.00E-03	B32-SQV-CC-F104B	F104B FAILS TO OPEN
		1.00E-03	B32-UV_-OO-F105B	CHECK VALVE FAILS TO CLOSE
		3.00E-03	R10-LOSP-EPRI	CONSEQUENTIAL LOSS OF PREFERRED OFFSITE POWER DUE TO A TRANSIENT
		1.00E+00	XHOS72H	HOUSE EVENT: 72 HOURS (VALUE =1)
171	2.94E-12	3.27E-03	%FL_EB-U43-S	
		1.00E-04	B32-NPO-CC-F105A	F105A Fails to Open
		3.00E-03	B32-SQV-CC-F104A	F104A FAILS TO OPEN
		3.00E-03	R10-LOSP-EPRI	CONSEQUENTIAL LOSS OF PREFERRED OFFSITE POWER DUE TO A TRANSIENT
		1.00E+00	XHOS72H	HOUSE EVENT: 72 HOURS (VALUE =1)

Table 13.7-2

Results - Internal Flooding At-Power Cutset Report

Cutsets with Descriptions Report Flooding At-Power Core Damage Frequency = 6.95E-09 Top 200 Cutsets				
#	**Cutset Prob**	**Event Prob**	**Event**	**Description**
172	2.94E-12	3.27E-03	%FL_EB-U43-S	
		1.00E-04	B32-NPO-CC-F105B	F105B fails to open
		3.00E-03	B32-SQV-CC-F104B	F104B FAILS TO OPEN
		3.00E-03	R10-LOSP-EPRI	CONSEQUENTIAL LOSS OF PREFERRED OFFSITE POWER DUE TO A TRANSIENT
		1.00E+00	XHOS72H	HOUSE EVENT: 72 HOURS (VALUE =1)
173	2.94E-12	3.27E-03	%FL_EB-U43-S	
		1.80E-05	C71-OLU-FC-R_ALL	CCF of all components in group 'C71-OLU-FC-R'
		1.00E-01	C71-XHE-FO-SCRAM	OPERATOR FAILS TO PERFORM MANUAL SCRAM
		5.00E-04	R16-BDC-TM-R16C	DC BUS R16-C IN MAINTENANCE
174	2.94E-12	3.27E-03	%FL_EB-U43-S	
		1.80E-05	C71-OLU-FC-R_ALL	CCF of all components in group 'C71-OLU-FC-R'
		1.00E-01	C71-XHE-FO-SCRAM	OPERATOR FAILS TO PERFORM MANUAL SCRAM
		5.00E-04	R16-BT_-TM-R16BTC	BATTERY R16-BTC IN TEST AND MAINTENANCE
175	2.89E-12	3.27E-03	%FL_EB-U43-S	
		1.00E+00	B32-NONCONDENSE	Non condensable gasses form in ICS sufficiently to require venting
		1.00E-04	C63-CCFSOFTWARE	Common cause failure of software
		3.00E-03	R10-LOSP-EPRI	CONSEQUENTIAL LOSS OF PREFERRED OFFSITE POWER DUE TO A TRANSIENT
		2.95E-03	R21-DG_-FR-ADG_1_2	CCF of two components: R21-DG_-FR-ADGA & R21-DG_-FR-ADGB
		1.00E+00	XHOS72H	HOUSE EVENT: 72 HOURS (VALUE =1)

Table 13.7-2

Results - Internal Flooding At-Power Cutset Report

Cutsets with Descriptions Report Flooding At-Power Core Damage Frequency = 6.95E-09 Top 200 Cutsets				
#	**Cutset Prob**	**Event Prob**	**Event**	**Description**
176	2.89E-12	3.27E-03	%FL_EB-U43-S	
		1.00E-04	C63-CCFSOFTWARE	Common cause failure of software
		3.00E-03	R10-LOSP-EPRI	CONSEQUENTIAL LOSS OF PREFERRED OFFSITE POWER DUE TO A TRANSIENT
		2.95E-03	R21-DG_-FR-ADG_1_2	CCF of two components: R21-DG_-FR-ADGA & R21-DG_-FR-ADGB
		1.00E+00	XHOS72H	HOUSE EVENT: 72 HOURS (VALUE =1)
177	2.87E-12	1.91E-04	%FL_TB-U43-L	
		1.50E-04	B21-SQV-CC_ALL	CCF of all components in group 'B21-SQV-CC'
		1.00E+00	B32-NONCONDENSE	Non condensable gasses form in ICS sufficiently to require venting
		1.00E-04	C63-CCFSOFTWARE	Common cause failure of software
178	2.87E-12	1.91E-04	%FL_TB-U43-L	
		1.50E-04	B21-SQV-CC_ALL	CCF of all components in group 'B21-SQV-CC'
		1.00E-04	C63-CCFSOFTWARE_S	ESF SPURIOUS COMMON CAUSE SOFTWARE FAILURE
179	2.87E-12	1.91E-04	%FL_TB-U43-L	
		1.00E+00	B32-NONCONDENSE	Non condensable gasses form in ICS sufficiently to require venting
		1.00E-04	C63-CCFSOFTWARE	Common cause failure of software
		1.50E-04	E50-SQV-CC-INJ_ALL	CCF of all components in group 'E50-SQV-CC-INJ'
180	2.87E-12	1.91E-04	%FL_TB-U43-L	
		1.00E-04	C63-CCFSOFTWARE_S	ESF SPURIOUS COMMON CAUSE SOFTWARE FAILURE
		1.50E-04	E50-SQV-CC-INJ_ALL	CCF of all components in group 'E50-SQV-CC-INJ'

Table 13.7-2

Results - Internal Flooding At-Power Cutset Report

Cutsets with Descriptions Report Flooding At-Power Core Damage Frequency = 6.95E-09 Top 200 Cutsets				
#	**Cutset Prob**	**Event Prob**	**Event**	**Description**
181	2.84E-12	3.27E-03	%FL_EB-U43-S	
		1.00E+00	B32-NONCONDENSE	Non condensable gasses form in ICS sufficiently to require venting
		1.80E-05	C63-LOG-FC-ESFLG_ALL	CCF of all components in group 'C63-LOG-FC-ESFLG'
		3.00E-03	R10-LOSP-EPRI	CONSEQUENTIAL LOSS OF PREFERRED OFFSITE POWER DUE TO A TRANSIENT
		1.61E-02	R13-XHE-FO-ADG	OPERATOR FAILS TO ALIGN THE ADG BUSES TO UPS BUSES
		1.00E+00	XHOS72H	HOUSE EVENT: 72 HOURS (VALUE =1)
182	2.84E-12	3.27E-03	%FL_EB-U43-S	
		1.00E+00	B32-NONCONDENSE	Non condensable gasses form in ICS sufficiently to require venting
		1.80E-05	C63-LOG-FC-ESFLG_ALL	CCF of all components in group 'C63-LOG-FC-ESFLG'
		3.00E-03	R10-LOSP-EPRI	CONSEQUENTIAL LOSS OF PREFERRED OFFSITE POWER DUE TO A TRANSIENT
		1.61E-02	R21-XHE-FO-ADG	OPERATOR FAILS TO CONTROL THE LOADS ON ANCILLARY DG BUSES
		1.00E+00	XHOS72H	HOUSE EVENT: 72 HOURS (VALUE =1)
183	2.84E-12	3.27E-03	%FL_EB-U43-S	
		1.80E-05	C63-LOG-FC-ESFLG_ALL	CCF of all components in group 'C63-LOG-FC-ESFLG'
		3.00E-03	R10-LOSP-EPRI	CONSEQUENTIAL LOSS OF PREFERRED OFFSITE POWER DUE TO A TRANSIENT
		1.61E-02	R13-XHE-FO-ADG	OPERATOR FAILS TO ALIGN THE ADG BUSES TO UPS BUSES
		1.00E+00	XHOS72H	HOUSE EVENT: 72 HOURS (VALUE =1)

Table 13.7-2

Results - Internal Flooding At-Power Cutset Report

Cutsets with Descriptions Report Flooding At-Power Core Damage Frequency = 6.95E-09 Top 200 Cutsets				
#	**Cutset Prob**	**Event Prob**	**Event**	**Description**
184	2.84E-12	3.27E-03	%FL_EB-U43-S	
		1.80E-05	C63-LOG-FC-ESFLG_ALL	CCF of all components in group 'C63-LOG-FC-ESFLG'
		3.00E-03	R10-LOSP-EPRI	CONSEQUENTIAL LOSS OF PREFERRED OFFSITE POWER DUE TO A TRANSIENT
		1.61E-02	R21-XHE-FO-ADG	OPERATOR FAILS TO CONTROL THE LOADS ON ANCILLARY DG BUSES
		1.00E+00	XHOS72H	HOUSE EVENT: 72 HOURS (VALUE =1)
185	2.82E-12	3.27E-03	%FL_EB-U43-S	
		1.80E-05	C71-OLU-FC-R_ALL	CCF of all components in group 'C71-OLU-FC-R'
		1.00E-01	C71-XHE-FO-SCRAM	OPERATOR FAILS TO PERFORM MANUAL SCRAM
		4.80E-04	R13-INV-FC-R13C	INVERTER TO R13-C FAILS
186	2.73E-12	8.20E-05	%FL_TB2-U43-L	
		1.00E-04	B32-NPO-CC-F105A	F105A Fails to Open
		3.33E-04	B32-SQV-CC-XCONN_1_2	CCF of two components: B32-SQV-CC-F104A & B32-SQV-CC-F104B
		1.00E+00	XHOS72H	HOUSE EVENT: 72 HOURS (VALUE =1)
185	2.82E-12	3.27E-03	%FL_EB-U43-S	
		1.61E-02	R13-XHE-FO-ADG	OPERATOR FAILS TO ALIGN THE ADG BUSES TO UPS BUSES
		1.00E+00	XHOS72H	HOUSE EVENT: 72 HOURS (VALUE =1)
187	2.73E-12	8.20E-05	%FL_TB2-U43-L	
		1.00E-04	B32-NPO-CC-F105B	F105B fails to open
		3.33E-04	B32-SQV-CC-XCONN_1_2	CCF of two components: B32-SQV-CC-F104A & B32-SQV-CC-F104B
		1.00E+00	XHOS72H	HOUSE EVENT: 72 HOURS (VALUE =1)

Table 13.7-2

Results - Internal Flooding At-Power Cutset Report

Cutsets with Descriptions Report Flooding At-Power Core Damage Frequency = 6.95E-09 Top 200 Cutsets				
#	**Cutset Prob**	**Event Prob**	**Event**	**Description**
188	2.54E-12	3.27E-03	%FL_EB-U43-S	
		1.00E+00	B32-NONCONDENSE	Non condensable gasses form in ICS sufficiently to require venting
		1.00E-04	C63-CCFSOFTWARE	Common cause failure of software
		3.00E-03	R10-LOSP-EPRI	CONSEQUENTIAL LOSS OF PREFERRED OFFSITE POWER DUE TO A TRANSIENT
		1.61E-02	R13-XHE-FO-ADG	OPERATOR FAILS TO ALIGN THE ADG BUSES TO UPS BUSES
		1.00E+00	XHOS72H	HOUSE EVENT: 72 HOURS (VALUE =1)
		1.61E-01	XXX-XHE-FO-DEPRESS	OPERATOR FAILS TO RECOGNIZE NEED OF DEPRESSURIZATION
189	2.54E-12	3.27E-03	%FL_EB-U43-S	
		1.00E+00	B32-NONCONDENSE	Non condensable gasses form in ICS sufficiently to require venting
		1.00E-04	C63-CCFSOFTWARE	Common cause failure of software
		3.00E-03	R10-LOSP-EPRI	CONSEQUENTIAL LOSS OF PREFERRED OFFSITE POWER DUE TO A TRANSIENT
		1.61E-02	R21-XHE-FO-ADG	OPERATOR FAILS TO CONTROL THE LOADS ON ANCILLARY DG BUSES
		1.00E+00	XHOS72H	HOUSE EVENT: 72 HOURS (VALUE =1)
		1.61E-01	XXX-XHE-FO-DEPRESS	OPERATOR FAILS TO RECOGNIZE NEED OF DEPRESSURIZATION
190	2.53E-12	3.27E-03	%FL_EB-U43-S	
		1.00E+00	B32-NONCONDENSE	Non condensable gasses form in ICS sufficiently to require venting
		1.00E-04	C63-CCFSOFTWARE	Common cause failure of software
		3.00E-03	R10-LOSP-EPRI	CONSEQUENTIAL LOSS OF PREFERRED OFFSITE POWER DUE TO A TRANSIENT
		5.60E-02	R21-DG_-FR-ADGA	ADG-A FAILS TO RUN
		4.60E-02	R21-DG_-TM-ADGB	ANCILLARY DG-B IN MAINTENANCE
		1.00E+00	XHOS72H	HOUSE EVENT: 72 HOURS (VALUE =1)

Table 13.7-2

Results - Internal Flooding At-Power Cutset Report

Cutsets with Descriptions Report Flooding At-Power Core Damage Frequency = 6.95E-09 Top 200 Cutsets				
#	**Cutset Prob**	**Event Prob**	**Event**	**Description**
191	2.53E-12	3.27E-03	%FL_EB-U43-S	
		1.00E+00	B32-NONCONDENSE	Non condensable gasses form in ICS sufficiently to require venting
		1.00E-04	C63-CCFSOFTWARE	Common cause failure of software
		3.00E-03	R10-LOSP-EPRI	CONSEQUENTIAL LOSS OF PREFERRED OFFSITE POWER DUE TO A TRANSIENT
		5.60E-02	R21-DG_-FR-ADGB	DIESEL GENERATOR FAILS TO RUN
		4.60E-02	R21-DG_-TM-ADGA	ANCILLARY DG-A IN MAINTENANCE
		1.00E+00	XHOS72H	HOUSE EVENT: 72 HOURS (VALUE =1)
192	2.53E-12	3.27E-03	%FL_EB-U43-S	
		1.00E-04	C63-CCFSOFTWARE	Common cause failure of software
		3.00E-03	R10-LOSP-EPRI	CONSEQUENTIAL LOSS OF PREFERRED OFFSITE POWER DUE TO A TRANSIENT
		5.60E-02	R21-DG_-FR-ADGA	ADG-A FAILS TO RUN
		4.60E-02	R21-DG_-TM-ADGB	ANCILLARY DG-B IN MAINTENANCE
		1.00E+00	XHOS72H	HOUSE EVENT: 72 HOURS (VALUE =1)
193	2.53E-12	3.27E-03	%FL_EB-U43-S	
		1.00E-04	C63-CCFSOFTWARE	Common cause failure of software
		3.00E-03	R10-LOSP-EPRI	CONSEQUENTIAL LOSS OF PREFERRED OFFSITE POWER DUE TO A TRANSIENT
		5.60E-02	R21-DG_-FR-ADGB	DIESEL GENERATOR FAILS TO RUN
		4.60E-02	R21-DG_-TM-ADGA	ANCILLARY DG-A IN MAINTENANCE
		1.00E+00	XHOS72H	HOUSE EVENT: 72 HOURS (VALUE =1)

Table 13.7-2

Results - Internal Flooding At-Power Cutset Report

Cutsets with Descriptions Report Flooding At-Power Core Damage Frequency = 6.95E-09 Top 200 Cutsets				
#	**Cutset Prob**	**Event Prob**	**Event**	**Description**
194	2.51E-12	1.04E-03	%FL_TBC-G31-S	
		1.50E-04	B21-SQV-CC_ALL	CCF of all components in group 'B21-SQV-CC'
		1.00E-04	C63-CCFSOFTWARE_S	ESF SPURIOUS COMMON CAUSE SOFTWARE FAILURE
		1.61E-01	XXX-XHE-FO-LPMAKEUP	OP. FAILS TO RECOG. NEED FOR LOW PRESS. MAKEUP AFTER DEPRESSURIZATION
195	2.51E-12	1.04E-03	%FL_TBC-G31-S	
		1.50E-04	B21-SQV-CC_ALL	CCF of all components in group 'B21-SQV-CC'
		1.00E-04	C63-CCFSOFTWARE_S	ESF SPURIOUS COMMON CAUSE SOFTWARE FAILURE
		1.61E-01	XXX-XHE-FO-DEPRESS	OPERATOR FAILS TO RECOGNIZE NEED OF DEPRESSURIZATION
196	2.51E-12	1.04E-03	%FL_TBC-G31-S	
		1.00E-04	C63-CCFSOFTWARE_S	ESF SPURIOUS COMMON CAUSE SOFTWARE FAILURE
		1.50E-04	E50-SQV-CC-INJ_ALL	CCF of all components in group 'E50-SQV-CC-INJ'
		1.61E-01	XXX-XHE-FO-DEPRESS	OPERATOR FAILS TO RECOGNIZE NEED OF DEPRESSURIZATION
197	2.37E-12	8.20E-05	%FL_TB2-U43-L	
		9.65E-06	B32-NPO-CC-XCONN_1_2	CCF of two components: B32-NPO-CC-F105A & B32-NPO-CC-F105B
		3.00E-03	B32-SQV-CC-F104A	F104A FAILS TO OPEN
		1.00E+00	XHOS72H	HOUSE EVENT: 72 HOURS (VALUE =1)

Table 13.7-2

Results - Internal Flooding At-Power Cutset Report

Cutsets with Descriptions Report Flooding At-Power Core Damage Frequency = 6.95E-09 Top 200 Cutsets				
#	**Cutset Prob**	**Event Prob**	**Event**	**Description**
198	2.37E-12	8.20E-05	%FL_TB2-U43-L	
		9.65E-06	B32-NPO-CC-XCONN_1_2	CCF of two components: B32-NPO-CC-F105A & B32-NPO-CC-F105B
		3.00E-03	B32-SQV-CC-F104B	F104B FAILS TO OPEN
		1.00E+00	XHOS72H	HOUSE EVENT: 72 HOURS (VALUE =1)
199	2.15E-12	1.79E-03	%FL_TBC-B21A-S	
		3.00E-03	B21-SQV-CC-F004E	EXPLOSIVE VALVE DPV E FAILS TO OPERATE
		4.00E-03	C12-MOV-CC-F023	MOTOR OPERATED VALVE F023 FAILS TO OPEN
		1.00E-04	C63-CCFSOFTWARE_S	ESF SPURIOUS COMMON CAUSE SOFTWARE FAILURE
200	2.15E-12	1.79E-03	%FL_TBC-B21A-S	
		3.00E-03	B21-SQV-CC-F004E	EXPLOSIVE VALVE DPV E FAILS TO OPERATE
		4.00E-03	C12-MOV-OO-F024	MOTOR OPERATED VALVE F024 FAILS TO CLOSE
		1.00E-04	C63-CCFSOFTWARE_S	ESF SPURIOUS COMMON CAUSE SOFTWARE FAILURE

Table 13.7-3

Results - Internal Flooding Shutdown Cutset Report

Cutsets with Descriptions Report Flooding Shutdown Core Damage Frequency = 5.21E-09Top 200 Cutsets				
#	**Cutset Prob**	**Event Prob**	**Event**	**Description**
1	2.62E-10	4.73E-07	%FL_RB3-P30-L-M5	
		4.84E-02	C12-BV_-RE-F064	MISPOSITION OF OPEN VALVE F064
		5.00E-02	MS-TOP2	TWO DPVs FAIL TO OPEN (MANUAL)
		2.29E-01	R-M5-G31	RWCU/SDC RECOVERY
2	1.74E-10	4.73E-07	%FL_RB3-P30-L-M5	
		3.21E-02	C12-XHE-FO-LEVEL2	Operator fails to back-up CRD actuation
		5.00E-02	MS-TOP2	TWO DPVs FAIL TO OPEN (MANUAL)
		2.29E-01	R-M5-G31	RWCU/SDC RECOVERY
3	8.44E-11	4.73E-07	%FL_RB3-P30-L-M5	
		4.84E-02	C12-BV_-RE-F064	MISPOSITION OF OPEN VALVE F064
		2.29E-01	R-M5-G31	RWCU/SDC RECOVERY
		1.61E-02	XXX-XHE-FO-LPMAKEUP	OP. FAILS TO RECOG. NEED FOR LOW PRESS. MAKEUP AFTER DEPRESSURIZATION
4	6.43E-11	1.16E-07	%FL_RB3-P30-L-M5O	
		4.84E-02	C12-BV_-RE-F064	MISPOSITION OF OPEN VALVE F064
		5.00E-02	MS-TOP2	TWO DPVs FAIL TO OPEN (MANUAL)
		2.29E-01	R-M5-G31	RWCU/SDC RECOVERY

Table 13.7-3

Results - Internal Flooding Shutdown Cutset Report

Cutsets with Descriptions Report **Flooding Shutdown** **Core Damage Frequency = 5.21E-09Top 200 Cutsets**				
5	5.60E-11	4.73E-07	%FL_RB3-P30-L-M5	
		3.21E-02	C12-XHE-FO-LEVEL2	Operator fails to back-up CRD actuation
		2.29E-01	R-M5-G31	RWCU/SDC RECOVERY
		1.61E-02	XXX-XHE-FO-LPMAKEUP	OP. FAILS TO RECOG. NEED FOR LOW PRESS. MAKEUP AFTER DEPRESSURIZATION
6	5.56E-11	4.86E-05	%FL_SF-P41A-S-M5	
		1.00E-04	C63-CCFSOFTWARE	Common cause failure of software
		5.00E-02	MS-TOP2	TWO DPVs FAIL TO OPEN (MANUAL)
		2.29E-01	R-M5-G31	RWCU/SDC RECOVERY
7	5.56E-11	4.86E-05	%FL_SF-P41B-S-M5	
		1.00E-04	C63-CCFSOFTWARE	Common cause failure of software
		5.00E-02	MS-TOP2	TWO DPVs FAIL TO OPEN (MANUAL)
		2.29E-01	R-M5-G31	RWCU/SDC RECOVERY
8	4.81E-11	2.10E-06	%FL_TB-U43-L-M5	
		1.00E-04	C63-CCFSOFTWARE	Common cause failure of software
		2.29E-01	R-M5-G31	RWCU/SDC RECOVERY
9	4.26E-11	1.16E-07	%FL_RB3-P30-L-M5O	
		3.21E-02	C12-XHE-FO-LEVEL2	Operator fails to back-up CRD actuation
		5.00E-02	MS-TOP2	TWO DPVs FAIL TO OPEN (MANUAL)
		2.29E-01	R-M5-G31	RWCU/SDC RECOVERY

Table 13.7-3

Results - Internal Flooding Shutdown Cutset Report

Cutsets with Descriptions Report **Flooding Shutdown** **Core Damage Frequency = 5.21E-09Top 200 Cutsets**				
10	4.26E-11	6.51E-07	%FL_TB-U43-L-M6U	
		3.00E-04	E50-SQV-CC-EQU_ALL	CCF of all components in group 'E50-SQV-CC-EQU'
		2.18E-01	R-M6-G31	FAILURE TO RECOVER RWCU/SDC
11	3.99E-11	3.54E-07	%FL_RBCNT-E50A-L-M6U	
		3.21E-02	C12-XHE-FO-LEVEL2	Operator fails to back-up CRD actuation
		2.18E-01	R-M6-G31	FAILURE TO RECOVER RWCU/SDC
		1.61E-02	XXX-XHE-FO-LPMAKEUP	OP. FAILS TO RECOG. NEED FOR LOW PRESS. MAKEUP AFTER DEPRESSURIZATION
12	3.99E-11	3.54E-07	%FL_RBCNT-E50D-L-M6U	
		3.21E-02	C12-XHE-FO-LEVEL2	Operator fails to back-up CRD actuation
		2.18E-01	R-M6-G31	FAILURE TO RECOVER RWCU/SDC
		1.61E-02	XXX-XHE-FO-LPMAKEUP	OP. FAILS TO RECOG. NEED FOR LOW PRESS. MAKEUP AFTER DEPRESSURIZATION
13	3.73E-11	6.51E-07	%FL_TB-U43-L-M6U	
		2.63E-04	E50-BV_-OC-F004A	MAINTENANCE VALVE F004A PLUGS/TRANSFERS CLOSED
		2.18E-01	R-M6-G31	FAILURE TO RECOVER RWCU/SDC
14	3.73E-11	6.51E-07	%FL_TB-U43-L-M6U	
		2.63E-04	E50-BV_-OC-F004D	MAINTENANCE VALVE F004D PLUGS/TRANSFERS CLOSED
		2.18E-01	R-M6-G31	FAILURE TO RECOVER RWCU/SDC
15	3.55E-11	5.17E-07	%FL_TB-U43-L-M5O	
		3.00E-04	E50-SQV-CC-EQU_ALL	CCF of all components in group 'E50-SQV-CC-EQU'
		2.29E-01	R-M5-G31	RWCU/SDC RECOVERY

Table 13.7-3

Results - Internal Flooding Shutdown Cutset Report

Cutsets with Descriptions Report **Flooding Shutdown** **Core Damage Frequency = 5.21E-09Top 200 Cutsets**				
16	3.33E-11	2.81E-07	%FL_RBCNT-E50A-L-M5O	
		3.21E-02	C12-XHE-FO-LEVEL2	Operator fails to back-up CRD actuation
		2.29E-01	R-M5-G31	RWCU/SDC RECOVERY
		1.61E-02	XXX-XHE-FO-LPMAKEUP	OP. FAILS TO RECOG. NEED FOR LOW PRESS. MAKEUP AFTER DEPRESSURIZATION
17	3.33E-11	2.81E-07	%FL_RBCNT-E50D-L-M5O	
		3.21E-02	C12-XHE-FO-LEVEL2	Operator fails to back-up CRD actuation
		2.29E-01	R-M5-G31	RWCU/SDC RECOVERY
		1.61E-02	XXX-XHE-FO-LPMAKEUP	OP. FAILS TO RECOG. NEED FOR LOW PRESS. MAKEUP AFTER DEPRESSURIZATION
18	3.11E-11	5.17E-07	%FL_TB-U43-L-M5O	
		2.63E-04	E50-BV_-OC-F004A	MAINTENANCE VALVE F004A PLUGS/TRANSFERS CLOSED
		2.29E-01	R-M5-G31	RWCU/SDC RECOVERY
19	3.11E-11	5.17E-07	%FL_TB-U43-L-M5O	
		2.63E-04	E50-BV_-OC-F004D	MAINTENANCE VALVE F004D PLUGS/TRANSFERS CLOSED
		2.29E-01	R-M5-G31	RWCU/SDC RECOVERY
20	2.95E-11	2.58E-05	%FL_TB1-P10-L-M5	
		1.00E-04	C63-CCFSOFTWARE	Common cause failure of software
		5.00E-02	MS-TOP2	TWO DPVs FAIL TO OPEN (MANUAL)
		2.29E-01	R-M5-G31	RWCU/SDC RECOVERY

Table 13.7-3

Results - Internal Flooding Shutdown Cutset Report

Cutsets with Descriptions Report **Flooding Shutdown** **Core Damage Frequency = 5.21E-09Top 200 Cutsets**				
21	2.48E-11	1.46E-07	%FL_RB3-P30-L-M6U	
		4.84E-02	C12-BV_-RE-F064	MISPOSITION OF OPEN VALVE F064
		2.18E-01	R-M6-G31	FAILURE TO RECOVER RWCU/SDC
		1.61E-02	XXX-XHE-FO-LPMAKEUP	OP. FAILS TO RECOG. NEED FOR LOW PRESS. MAKEUP AFTER DEPRESSURIZATION
22	2.26E-11	1.97E-05	%FL_TBC-B21B-S-M5	
		1.00E-04	C63-CCFSOFTWARE	Common cause failure of software
		5.00E-02	MS-TOP2	TWO DPVs FAIL TO OPEN (MANUAL)
		2.29E-01	R-M5-G31	RWCU/SDC RECOVERY
23	2.17E-11	4.73E-07	%FL_RB3-P30-L-M5	
		4.00E-03	C12-MOV-CC-F023	MOTOR OPERATED VALVE F023 FAILS TO OPEN
		5.00E-02	MS-TOP2	TWO DPVs FAIL TO OPEN (MANUAL)
		2.29E-01	R-M5-G31	RWCU/SDC RECOVERY
24	2.17E-11	4.73E-07	%FL_RB3-P30-L-M5	
		4.00E-03	C12-MOV-OO-F024	MOTOR OPERATED VALVE F024 FAILS TO CLOSE
		5.00E-02	MS-TOP2	TWO DPVs FAIL TO OPEN (MANUAL)
		2.29E-01	R-M5-G31	RWCU/SDC RECOVERY
25	2.17E-11	4.73E-07	%FL_RB3-P30-L-M5	
		4.00E-03	C12-MOV-OO-F062A	MOTOR OPERATED VALVE F062A FAILS TO CLOSE
		5.00E-02	MS-TOP2	TWO DPVs FAIL TO OPEN (MANUAL)
		2.29E-01	R-M5-G31	RWCU/SDC RECOVERY

Table 13.7-3

Results - Internal Flooding Shutdown Cutset Report

Cutsets with Descriptions Report Flooding Shutdown Core Damage Frequency = 5.21E-09Top 200 Cutsets				
26	2.17E-11	4.73E-07	%FL_RB3-P30-L-M5	
		4.00E-03	C12-MOV-OO-F062B	MOTOR OPERATED VALVE F062B FAILS TO CLOSE
		5.00E-02	MS-TOP2	TWO DPVs FAIL TO OPEN (MANUAL)
		2.29E-01	R-M5-G31	RWCU/SDC RECOVERY
27	2.13E-11	6.51E-07	%FL_TB-U43-L-M6U	
		1.50E-04	E50-SQV-CC-INJ_ALL	CCF of all components in group 'E50-SQV-CC-INJ'
		2.18E-01	R-M6-G31	FAILURE TO RECOVER RWCU/SDC
28	2.07E-11	1.16E-07	%FL_RB3-P30-L-M5O	
		4.84E-02	C12-BV_-RE-F064	MISPOSITION OF OPEN VALVE F064
		2.29E-01	R-M5-G31	RWCU/SDC RECOVERY
		1.61E-02	XXX-XHE-FO-LPMAKEUP	OP. FAILS TO RECOG. NEED FOR LOW PRESS. MAKEUP AFTER DEPRESSURIZATION
29	2.07E-11	9.02E-07	%FL_TB2-U43-L-M5	
		1.00E-04	C63-CCFSOFTWARE	Common cause failure of software
		2.29E-01	R-M5-G31	RWCU/SDC RECOVERY
30	2.04E-11	1.19E-05	%FL_SF-P41A-S-M5O	
		1.50E-04	B21-SQV-CC_ALL	CCF of all components in group 'B21-SQV-CC'
		5.00E-02	MS-TOP2	TWO DPVs FAIL TO OPEN (MANUAL)
		2.29E-01	R-M5-G31	RWCU/SDC RECOVERY

Table 13.7-3

Results - Internal Flooding Shutdown Cutset Report

Cutsets with Descriptions Report **Flooding Shutdown** **Core Damage Frequency = 5.21E-09Top 200 Cutsets**				
31	2.04E-11	1.19E-05	%FL_SF-P41B-S-M5O	
		1.50E-04	B21-SQV-CC_ALL	CCF of all components in group 'B21-SQV-CC'
		5.00E-02	MS-TOP2	TWO DPVs FAIL TO OPEN (MANUAL)
		2.29E-01	R-M5-G31	RWCU/SDC RECOVERY
32	1.82E-11	2.79E-07	%FL_TB2-U43-L-M6U	
		3.00E-04	E50-SQV-CC-EQU_ALL	CCF of all components in group 'E50-SQV-CC-EQU'
		2.18E-01	R-M6-G31	FAILURE TO RECOVER RWCU/SDC
33	1.79E-11	4.86E-05	%FL_SF-P41A-S-M5	
		1.00E-04	C63-CCFSOFTWARE	Common cause failure of software
		2.29E-01	R-M5-G31	RWCU/SDC RECOVERY
		1.61E-02	XXX-XHE-FO-LPMAKEUP	OP. FAILS TO RECOG. NEED FOR LOW PRESS. MAKEUP AFTER DEPRESSURIZATION
34	1.79E-11	4.86E-05	%FL_SF-P41B-S-M5	
		1.00E-04	C63-CCFSOFTWARE	Common cause failure of software
		2.29E-01	R-M5-G31	RWCU/SDC RECOVERY
		1.61E-02	XXX-XHE-FO-LPMAKEUP	OP. FAILS TO RECOG. NEED FOR LOW PRESS. MAKEUP AFTER DEPRESSURIZATION
35	1.78E-11	5.17E-07	%FL_TB-U43-L-M5O	
		1.50E-04	B21-SQV-CC_ALL	CCF of all components in group 'B21-SQV-CC'
		2.29E-01	R-M5-G31	RWCU/SDC RECOVERY
36	1.78E-11	5.17E-07	%FL_TB-U43-L-M5O	
		1.50E-04	E50-SQV-CC-INJ_ALL	CCF of all components in group 'E50-SQV-CC-INJ'
		2.29E-01	R-M5-G31	RWCU/SDC RECOVERY

Table 13.7-3

Results - Internal Flooding Shutdown Cutset Report

Cutsets with Descriptions Report **Flooding Shutdown** **Core Damage Frequency = 5.21E-09Top 200 Cutsets**				
37	1.67E-11	4.86E-05	%FL_SF-P41A-S-M5	
		3.00E-05	C63-DTM-FC-ESFLG_ALL	CCF of all components in group 'C63-DTM-FC-ESFLG'
		5.00E-02	MS-TOP2	TWO DPVs FAIL TO OPEN (MANUAL)
		2.29E-01	R-M5-G31	RWCU/SDC RECOVERY
38	1.67E-11	4.86E-05	%FL_SF-P41B-S-M5	
		3.00E-05	C63-DTM-FC-ESFLG_ALL	CCF of all components in group 'C63-DTM-FC-ESFLG'
		5.00E-02	MS-TOP2	TWO DPVs FAIL TO OPEN (MANUAL)
		2.29E-01	R-M5-G31	RWCU/SDC RECOVERY
39	1.64E-11	1.46E-07	%FL_RB3-P30-L-M6U	
		3.21E-02	C12-XHE-FO-LEVEL2	Operator fails to back-up CRD actuation
		2.18E-01	R-M6-G31	FAILURE TO RECOVER RWCU/SDC
		1.61E-02	XXX-XHE-FO-LPMAKEUP	OP. FAILS TO RECOG. NEED FOR LOW PRESS. MAKEUP AFTER DEPRESSURIZATION
40	1.60E-11	2.79E-07	%FL_TB2-U43-L-M6U	
		2.63E-04	E50-BV_-OC-F004A	MAINTENANCE VALVE F004A PLUGS/TRANSFERS CLOSED
		2.18E-01	R-M6-G31	FAILURE TO RECOVER RWCU/SDC
41	1.60E-11	2.79E-07	%FL_TB2-U43-L-M6U	
		2.63E-04	E50-BV_-OC-F004D	MAINTENANCE VALVE F004D PLUGS/TRANSFERS CLOSED
		2.18E-01	R-M6-G31	FAILURE TO RECOVER RWCU/SDC

Table 13.7-3

Results - Internal Flooding Shutdown Cutset Report

Cutsets with Descriptions Report **Flooding Shutdown** **Core Damage Frequency = 5.21E-09Top 200 Cutsets**				
42	1.58E-11	1.50E-05	%FL_SF-P41A-S-M6U	
		3.00E-04	E50-SQV-CC-EQU_ALL	CCF of all components in group 'E50-SQV-CC-EQU'
		2.18E-01	R-M6-G31	FAILURE TO RECOVER RWCU/SDC
		1.61E-02	XXX-XHE-FO-LPMAKEUP	OP. FAILS TO RECOG. NEED FOR LOW PRESS. MAKEUP AFTER DEPRESSURIZATION
43	1.58E-11	1.50E-05	%FL_SF-P41B-S-M6U	
		3.00E-04	E50-SQV-CC-EQU_ALL	CCF of all components in group 'E50-SQV-CC-EQU'
		2.18E-01	R-M6-G31	FAILURE TO RECOVER RWCU/SDC
		1.61E-02	XXX-XHE-FO-LPMAKEUP	OP. FAILS TO RECOG. NEED FOR LOW PRESS. MAKEUP AFTER DEPRESSURIZATION
44	1.52E-11	2.21E-07	%FL_TB2-U43-L-M5O	
		3.00E-04	E50-SQV-CC-EQU_ALL	CCF of all components in group 'E50-SQV-CC-EQU'
		2.29E-01	R-M5-G31	RWCU/SDC RECOVERY
45	1.52E-11	6.62E-07	%FL_TB1-U43-L-M5	
		1.00E-04	C63-CCFSOFTWARE	Common cause failure of software
		2.29E-01	R-M5-G31	RWCU/SDC RECOVERY
46	1.45E-11	1.97E-05	%FL_TBC-B21A-S-M5	
		3.21E-02	C12-XHE-FO-LEVEL2	Operator fails to back-up CRD actuation
		1.00E-04	C63-CCFSOFTWARE	Common cause failure of software
		2.29E-01	R-M5-G31	RWCU/SDC RECOVERY
47	1.44E-11	2.10E-06	%FL_TB-U43-L-M5	
		3.00E-05	C63-DTM-FC-ESFLG_ALL	CCF of all components in group 'C63-DTM-FC-ESFLG'
		2.29E-01	R-M5-G31	RWCU/SDC RECOVERY

Table 13.7-3

Results - Internal Flooding Shutdown Cutset Report

Cutsets with Descriptions Report **Flooding Shutdown** **Core Damage Frequency = 5.21E-09Top 200 Cutsets**				
48	1.42E-11	6.51E-07	%FL_TB-U43-L-M6U	
		1.00E-04	C63-CCFSOFTWARE	Common cause failure of software
		2.18E-01	R-M6-G31	FAILURE TO RECOVER RWCU/SDC
49	1.38E-11	1.50E-05	%FL_SF-P41A-S-M6U	
		2.63E-04	E50-BV_-OC-F004A	MAINTENANCE VALVE F004A PLUGS/TRANSFERS CLOSED
		2.18E-01	R-M6-G31	FAILURE TO RECOVER RWCU/SDC
		1.61E-02	XXX-XHE-FO-LPMAKEUP	OP. FAILS TO RECOG. NEED FOR LOW PRESS. MAKEUP AFTER DEPRESSURIZATION
50	1.38E-11	1.50E-05	%FL_SF-P41A-S-M6U	
		2.63E-04	E50-BV_-OC-F004D	MAINTENANCE VALVE F004D PLUGS/TRANSFERS CLOSED
		2.18E-01	R-M6-G31	FAILURE TO RECOVER RWCU/SDC
		1.61E-02	XXX-XHE-FO-LPMAKEUP	OP. FAILS TO RECOG. NEED FOR LOW PRESS. MAKEUP AFTER DEPRESSURIZATION
51	1.38E-11	1.50E-05	%FL_SF-P41B-S-M6U	
		2.63E-04	E50-BV_-OC-F004A	MAINTENANCE VALVE F004A PLUGS/TRANSFERS CLOSED
		2.18E-01	R-M6-G31	FAILURE TO RECOVER RWCU/SDC
		1.61E-02	XXX-XHE-FO-LPMAKEUP	OP. FAILS TO RECOG. NEED FOR LOW PRESS. MAKEUP AFTER DEPRESSURIZATION
52	1.38E-11	1.50E-05	%FL_SF-P41B-S-M6U	
		2.63E-04	E50-BV_-OC-F004D	MAINTENANCE VALVE F004D PLUGS/TRANSFERS CLOSED
		2.18E-01	R-M6-G31	FAILURE TO RECOVER RWCU/SDC
		1.61E-02	XXX-XHE-FO-LPMAKEUP	OP. FAILS TO RECOG. NEED FOR LOW PRESS. MAKEUP AFTER DEPRESSURIZATION

Table 13.7-3

Results - Internal Flooding Shutdown Cutset Report

Cutsets with Descriptions Report **Flooding Shutdown** **Core Damage Frequency = 5.21E-09Top 200 Cutsets**				
53	1.37E-11	1.16E-07	%FL_RB3-P30-L-M5O	
		3.21E-02	C12-XHE-FO-LEVEL2	Operator fails to back-up CRD actuation
		2.29E-01	R-M5-G31	RWCU/SDC RECOVERY
		1.61E-02	XXX-XHE-FO-LPMAKEUP	OP. FAILS TO RECOG. NEED FOR LOW PRESS. MAKEUP AFTER DEPRESSURIZATION
54	1.36E-11	1.19E-05	%FL_SF-P41A-S-M5O	
		1.00E-04	C63-CCFSOFTWARE	Common cause failure of software
		5.00E-02	MS-TOP2	TWO DPVs FAIL TO OPEN (MANUAL)
		2.29E-01	R-M5-G31	RWCU/SDC RECOVERY
55	1.36E-11	1.19E-05	%FL_SF-P41B-S-M5O	
		1.00E-04	C63-CCFSOFTWARE	Common cause failure of software
		5.00E-02	MS-TOP2	TWO DPVs FAIL TO OPEN (MANUAL)
		2.29E-01	R-M5-G31	RWCU/SDC RECOVERY
56	1.34E-11	2.05E-07	%FL_TB1-U43-L-M6U	
		3.00E-04	E50-SQV-CC-EQU_ALL	CCF of all components in group 'E50-SQV-CC-EQU'
		2.18E-01	R-M6-G31	FAILURE TO RECOVER RWCU/SDC
57	1.33E-11	2.21E-07	%FL_TB2-U43-L-M5O	
		2.63E-04	E50-BV_-OC-F004A	MAINTENANCE VALVE F004A PLUGS/TRANSFERS CLOSED
		2.29E-01	R-M5-G31	RWCU/SDC RECOVERY
58	1.33E-11	2.21E-07	%FL_TB2-U43-L-M5O	
		2.63E-04	E50-BV_-OC-F004D	MAINTENANCE VALVE F004D PLUGS/TRANSFERS CLOSED
		2.29E-01	R-M5-G31	RWCU/SDC RECOVERY

Table 13.7-3

Results - Internal Flooding Shutdown Cutset Report

Cutsets with Descriptions Report **Flooding Shutdown** **Core Damage Frequency = 5.21E-09Top 200 Cutsets**				
59	1.32E-11	1.15E-05	%FL_TBC-G31-S-M5	
		1.00E-04	C63-CCFSOFTWARE	Common cause failure of software
		5.00E-02	MS-TOP2	TWO DPVs FAIL TO OPEN (MANUAL)
		2.29E-01	R-M5-G31	RWCU/SDC RECOVERY
60	1.32E-11	1.19E-05	%FL_SF-P41A-S-M5O	
		3.00E-04	E50-SQV-CC-EQU_ALL	CCF of all components in group 'E50-SQV-CC-EQU'
		2.29E-01	R-M5-G31	RWCU/SDC RECOVERY
		1.61E-02	XXX-XHE-FO-LPMAKEUP	OP. FAILS TO RECOG. NEED FOR LOW PRESS. MAKEUP AFTER DEPRESSURIZATION
61	1.32E-11	1.19E-05	%FL_SF-P41B-S-M5O	
		3.00E-04	E50-SQV-CC-EQU_ALL	CCF of all components in group 'E50-SQV-CC-EQU'
		2.29E-01	R-M5-G31	RWCU/SDC RECOVERY
		1.61E-02	XXX-XHE-FO-LPMAKEUP	OP. FAILS TO RECOG. NEED FOR LOW PRESS. MAKEUP AFTER DEPRESSURIZATION
62	1.28E-11	6.08E-06	%FL_TBC-B21A-S-M6U	
		3.21E-02	C12-XHE-FO-LEVEL2	Operator fails to back-up CRD actuation
		3.00E-04	E50-SQV-CC-EQU_ALL	CCF of all components in group 'E50-SQV-CC-EQU'
		2.18E-01	R-M6-G31	FAILURE TO RECOVER RWCU/SDC
63	1.27E-11	4.73E-07	%FL_RB3-P30-L-M5	
		4.84E-02	C12-BV_-RE-F013A	MISPOSITION OF VALVE F013A
		4.84E-02	C12-BV_-RE-F013B	MISPOSITION OF VALVE F013B
		5.00E-02	MS-TOP2	TWO DPVs FAIL TO OPEN (MANUAL)
		2.29E-01	R-M5-G31	RWCU/SDC RECOVERY

Table 13.7-3

Results - Internal Flooding Shutdown Cutset Report

Cutsets with Descriptions Report **Flooding Shutdown** **Core Damage Frequency = 5.21E-09Top 200 Cutsets**				
64	1.27E-11	4.73E-07	%FL_RB3-P30-L-M5	
		4.84E-02	C12-BV_-RE-F013A	MISPOSITION OF VALVE F013A
		4.84E-02	C12-BV_-RE-F015B	MISPOSITION OF VALVE F015B
		5.00E-02	MS-TOP2	TWO DPVs FAIL TO OPEN (MANUAL)
		2.29E-01	R-M5-G31	RWCU/SDC RECOVERY
65	1.27E-11	4.73E-07	%FL_RB3-P30-L-M5	
		4.84E-02	C12-BV_-RE-F013B	MISPOSITION OF VALVE F013B
		4.84E-02	C12-BV_-RE-F015A	MISPOSITION OF VALVE F015A
		5.00E-02	MS-TOP2	TWO DPVs FAIL TO OPEN (MANUAL)
		2.29E-01	R-M5-G31	RWCU/SDC RECOVERY
66	1.27E-11	4.73E-07	%FL_RB3-P30-L-M5	
		4.84E-02	C12-BV_-RE-F015A	MISPOSITION OF VALVE F015A
		4.84E-02	C12-BV_-RE-F015B	MISPOSITION OF VALVE F015B
		5.00E-02	MS-TOP2	TWO DPVs FAIL TO OPEN (MANUAL)
		2.29E-01	R-M5-G31	RWCU/SDC RECOVERY
67	1.18E-11	5.17E-07	%FL_TB-U43-L-M5O	
		1.00E-04	C63-CCFSOFTWARE	Common cause failure of software
		2.29E-01	R-M5-G31	RWCU/SDC RECOVERY
68	1.17E-11	2.05E-07	%FL_TB1-U43-L-M6U	
		2.63E-04	E50-BV_-OC-F004A	MAINTENANCE VALVE F004A PLUGS/TRANSFERS CLOSED
		2.18E-01	R-M6-G31	FAILURE TO RECOVER RWCU/SDC

Table 13.7-3

Results - Internal Flooding Shutdown Cutset Report

Cutsets with Descriptions Report **Flooding Shutdown** **Core Damage Frequency = 5.21E-09Top 200 Cutsets**				
72	1.15E-11	1.19E-05	%FL_SF-P41B-S-M5O	
		2.63E-04	E50-BV_-OC-F004A	MAINTENANCE VALVE F004A PLUGS/TRANSFERS CLOSED
		2.29E-01	R-M5-G31	RWCU/SDC RECOVERY
		1.61E-02	XXX-XHE-FO-LPMAKEUP	OP. FAILS TO RECOG. NEED FOR LOW PRESS. MAKEUP AFTER DEPRESSURIZATION
73	1.15E-11	1.19E-05	%FL_SF-P41B-S-M5O	
		2.63E-04	E50-BV_-OC-F004D	MAINTENANCE VALVE F004D PLUGS/TRANSFERS CLOSED
		2.29E-01	R-M5-G31	RWCU/SDC RECOVERY
		1.61E-02	XXX-XHE-FO-LPMAKEUP	OP. FAILS TO RECOG. NEED FOR LOW PRESS. MAKEUP AFTER DEPRESSURIZATION
74	1.12E-11	1.63E-07	%FL_TB1-U43-L-M5O	
		3.00E-04	E50-SQV-CC-EQU_ALL	CCF of all components in group 'E50-SQV-CC-EQU'
		2.29E-01	R-M5-G31	RWCU/SDC RECOVERY
75	1.12E-11	6.08E-06	%FL_TBC-B21A-S-M6U	
		3.21E-02	C12-XHE-FO-LEVEL2	Operator fails to back-up CRD actuation
		2.63E-04	E50-BV_-OC-F004A	MAINTENANCE VALVE F004A PLUGS/TRANSFERS CLOSED
		2.18E-01	R-M6-G31	FAILURE TO RECOVER RWCU/SDC
76	1.12E-11	6.08E-06	%FL_TBC-B21A-S-M6U	
		3.21E-02	C12-XHE-FO-LEVEL2	Operator fails to back-up CRD actuation
		2.63E-04	E50-BV_-OC-F004D	MAINTENANCE VALVE F004D PLUGS/TRANSFERS CLOSED
		2.18E-01	R-M6-G31	FAILURE TO RECOVER RWCU/SDC

Table 13.7-3

Results - Internal Flooding Shutdown Cutset Report

Cutsets with Descriptions Report Flooding Shutdown Core Damage Frequency = 5.21E-09Top 200 Cutsets				
77	1.08E-11	4.73E-07	%FL_RB3-P30-L-M5	
		2.00E-03	C12-ACV-OO-F012	AIR OPERATED VALVE F012 FAILS TO CLOSE
		5.00E-02	MS-TOP2	TWO DPVs FAIL TO OPEN (MANUAL)
		2.29E-01	R-M5-G31	RWCU/SDC RECOVERY
78	1.08E-11	4.73E-07	%FL_RB3-P30-L-M5	
		2.00E-03	C12-ACV-OO-F030	AIR OPERATED VALVE F030 FAILS TO CLOSE
		5.00E-02	MS-TOP2	TWO DPVs FAIL TO OPEN (MANUAL)
		2.29E-01	R-M5-G31	RWCU/SDC RECOVERY
79	1.07E-11	4.83E-06	%FL_TBC-B21A-S-M5O	
		3.21E-02	C12-XHE-FO-LEVEL2	Operator fails to back-up CRD actuation
		3.00E-04	E50-SQV-CC-EQU_ALL	CCF of all components in group 'E50-SQV-CC-EQU'
		2.29E-01	R-M5-G31	RWCU/SDC RECOVERY
80	1.05E-11	4.73E-07	%FL_RB3-P30-L-M5	
		4.84E-02	C12-BV_-RE-F064	MISPOSITION OF OPEN VALVE F064
		2.00E-03	G21-MP_-FS-PLP	MOTOR-DRIVEN LPI PUMP FAILS TO START
		2.29E-01	R-M5-G31	RWCU/SDC RECOVERY
81	1.00E-11	4.86E-05	%FL_SF-P41A-S-M5	
		1.80E-05	C63-LOG-FC-ESFLG_ALL	CCF of all components in group 'C63-LOG-FC-ESFLG'
		5.00E-02	MS-TOP2	TWO DPVs FAIL TO OPEN (MANUAL)
		2.29E-01	R-M5-G31	RWCU/SDC RECOVERY

Table 13.7-3

Results - Internal Flooding Shutdown Cutset Report

Cutsets with Descriptions Report **Flooding Shutdown** **Core Damage Frequency = 5.21E-09Top 200 Cutsets**				
82	1.00E-11	4.86E-05	%FL_SF-P41B-S-M5	
		1.80E-05	C63-LOG-FC-ESFLG_ALL	CCF of all components in group 'C63-LOG-FC-ESFLG'
		5.00E-02	MS-TOP2	TWO DPVs FAIL TO OPEN (MANUAL)
		2.29E-01	R-M5-G31	RWCU/SDC RECOVERY
83	9.92E-12	1.35E-05	%FL_FW1-G21-S-M5	
		3.21E-02	C12-XHE-FO-LEVEL2	Operator fails to back-up CRD actuation
		1.00E-04	C63-CCFSOFTWARE	Common cause failure of software
		2.29E-01	R-M5-G31	RWCU/SDC RECOVERY
84	9.81E-12	1.63E-07	%FL_TB1-U43-L-M5O	
		2.63E-04	E50-BV_-OC-F004A	MAINTENANCE VALVE F004A PLUGS/TRANSFERS CLOSED
		2.29E-01	R-M5-G31	RWCU/SDC RECOVERY
85	9.81E-12	1.63E-07	%FL_TB1-U43-L-M5O	
		2.63E-04	E50-BV_-OC-F004D	MAINTENANCE VALVE F004D PLUGS/TRANSFERS CLOSED
		2.29E-01	R-M5-G31	RWCU/SDC RECOVERY
86	9.51E-12	2.58E-05	%FL_TB1-P10-L-M5	
		1.00E-04	C63-CCFSOFTWARE	Common cause failure of software
		2.29E-01	R-M5-G31	RWCU/SDC RECOVERY
		1.61E-02	XXX-XHE-FO-LPMAKEUP	OP. FAILS TO RECOG. NEED FOR LOW PRESS. MAKEUP AFTER DEPRESSURIZATION

Table 13.7-3

Results - Internal Flooding Shutdown Cutset Report

Cutsets with Descriptions Report Flooding Shutdown Core Damage Frequency = 5.21E-09Top 200 Cutsets				
87	9.33E-12	4.83E-06	%FL_TBC-B21A-S-M5O	
		3.21E-02	C12-XHE-FO-LEVEL2	Operator fails to back-up CRD actuation
		2.63E-04	E50-BV_-OC-F004A	MAINTENANCE VALVE F004A PLUGS/TRANSFERS CLOSED
		2.29E-01	R-M5-G31	RWCU/SDC RECOVERY
88	9.33E-12	4.83E-06	%FL_TBC-B21A-S-M5O	
		3.21E-02	C12-XHE-FO-LEVEL2	Operator fails to back-up CRD actuation
		2.63E-04	E50-BV_-OC-F004D	MAINTENANCE VALVE F004D PLUGS/TRANSFERS CLOSED
		2.29E-01	R-M5-G31	RWCU/SDC RECOVERY
89	9.12E-12	2.79E-07	%FL_TB2-U43-L-M6U	
		1.50E-04	E50-SQV-CC-INJ_ALL	CCF of all components in group 'E50-SQV-CC-INJ'
		2.18E-01	R-M6-G31	FAILURE TO RECOVER RWCU/SDC
90	8.86E-12	2.58E-05	%FL_TB1-P10-L-M5	
		3.00E-05	C63-DTM-FC-ESFLG_ALL	CCF of all components in group 'C63-DTM-FC-ESFLG'
		5.00E-02	MS-TOP2	TWO DPVs FAIL TO OPEN (MANUAL)
		2.29E-01	R-M5-G31	RWCU/SDC RECOVERY
91	8.75E-12	4.17E-06	%FL_FW1-G21-S-M6U	
		3.21E-02	C12-XHE-FO-LEVEL2	Operator fails to back-up CRD actuation
		3.00E-04	E50-SQV-CC-EQU_ALL	CCF of all components in group 'E50-SQV-CC-EQU'
		2.18E-01	R-M6-G31	FAILURE TO RECOVER RWCU/SDC
92	8.66E-12	2.10E-06	%FL_TB-U43-L-M5	
		1.80E-05	C63-LOG-FC-ESFLG_ALL	CCF of all components in group 'C63-LOG-FC-ESFLG'
		2.29E-01	R-M5-G31	RWCU/SDC RECOVERY

Table 13.7-3

Results - Internal Flooding Shutdown Cutset Report

Cutsets with Descriptions Report **Flooding Shutdown** **Core Damage Frequency = 5.21E-09Top 200 Cutsets**				
93	8.44E-12	4.73E-07	%FL_RB3-P30-L-M5	
		4.84E-02	C12-BV_-RE-F064	MISPOSITION OF OPEN VALVE F064
		2.29E-01	R-M5-G31	RWCU/SDC RECOVERY
		1.61E-03	U43-XHE-FO-LPCI	OPERATOR FAILS TO ACTUATE U43 IN LPCI MODE
94	8.30E-12	4.83E-06	%FL_TBC-B21B-S-M5O	
		1.50E-04	B21-SQV-CC_ALL	CCF of all components in group 'B21-SQV-CC'
		5.00E-02	MS-TOP2	TWO DPVs FAIL TO OPEN (MANUAL)
		2.29E-01	R-M5-G31	RWCU/SDC RECOVERY
95	7.90E-12	1.50E-05	%FL_SF-P41A-S-M6U	
		1.50E-04	E50-SQV-CC-INJ_ALL	CCF of all components in group 'E50-SQV-CC-INJ'
		2.18E-01	R-M6-G31	FAILURE TO RECOVER RWCU/SDC
		1.61E-02	XXX-XHE-FO-LPMAKEUP	OP. FAILS TO RECOG. NEED FOR LOW PRESS. MAKEUP AFTER DEPRESSURIZATION
96	7.90E-12	1.50E-05	%FL_SF-P41B-S-M6U	
		1.50E-04	E50-SQV-CC-INJ_ALL	CCF of all components in group 'E50-SQV-CC-INJ'
		2.18E-01	R-M6-G31	FAILURE TO RECOVER RWCU/SDC
		1.61E-02	XXX-XHE-FO-LPMAKEUP	OP. FAILS TO RECOG. NEED FOR LOW PRESS. MAKEUP AFTER DEPRESSURIZATION
97	7.86E-12	4.73E-07	%FL_RB3-P30-L-M5	
		4.84E-02	C12-BV_-RE-F064	MISPOSITION OF OPEN VALVE F064
		1.50E-03	R21-NSC-TM-ANCA	ADG BUS A IN TEST OR MAINTENANCE
		2.29E-01	R-M5-G31	RWCU/SDC RECOVERY

Table 13.7-3

Results - Internal Flooding Shutdown Cutset Report

Cutsets with Descriptions Report Flooding Shutdown Core Damage Frequency = 5.21E-09Top 200 Cutsets				
98	7.67E-12	4.17E-06	%FL_FW1-G21-S-M6U	
		3.21E-02	C12-XHE-FO-LEVEL2	Operator fails to back-up CRD actuation
		2.63E-04	E50-BV_-OC-F004A	MAINTENANCE VALVE F004A PLUGS/TRANSFERS CLOSED
		2.18E-01	R-M6-G31	FAILURE TO RECOVER RWCU/SDC
99	7.67E-12	4.17E-06	%FL_FW1-G21-S-M6U	
		3.21E-02	C12-XHE-FO-LEVEL2	Operator fails to back-up CRD actuation
		2.63E-04	E50-BV_-OC-F004D	MAINTENANCE VALVE F004D PLUGS/TRANSFERS CLOSED
		2.18E-01	R-M6-G31	FAILURE TO RECOVER RWCU/SDC
100	7.59E-12	2.21E-07	%FL_TB2-U43-L-M5O	
		1.50E-04	B21-SQV-CC_ALL	CCF of all components in group 'B21-SQV-CC'
		2.29E-01	R-M5-G31	RWCU/SDC RECOVERY
101	7.59E-12	2.21E-07	%FL_TB2-U43-L-M5O	
		1.50E-04	E50-SQV-CC-INJ_ALL	CCF of all components in group 'E50-SQV-CC-INJ'
		2.29E-01	R-M5-G31	RWCU/SDC RECOVERY
102	7.57E-12	6.61E-06	%FL_RB-2A-C12-L-M5	
		1.00E-04	C63-CCFSOFTWARE	Common cause failure of software
		5.00E-02	MS-TOP2	TWO DPVs FAIL TO OPEN (MANUAL)
		2.29E-01	R-M5-G31	RWCU/SDC RECOVERY
103	7.33E-12	6.40E-06	%FL_TB-P41A-L-M5	
		1.00E-04	C63-CCFSOFTWARE	Common cause failure of software
		5.00E-02	MS-TOP2	TWO DPVs FAIL TO OPEN (MANUAL)
		2.29E-01	R-M5-G31	RWCU/SDC RECOVERY

Table 13.7-3

Results - Internal Flooding Shutdown Cutset Report

Cutsets with Descriptions Report **Flooding Shutdown** **Core Damage Frequency = 5.21E-09Top 200 Cutsets**				
104	7.33E-12	6.40E-06	%FL_TB-P41B-L-M5	
		1.00E-04	C63-CCFSOFTWARE	Common cause failure of software
		5.00E-02	MS-TOP2	TWO DPVs FAIL TO OPEN (MANUAL)
		2.29E-01	R-M5-G31	RWCU/SDC RECOVERY
105	7.30E-12	3.31E-06	%FL_FW1-G21-S-M5O	
		3.21E-02	C12-XHE-FO-LEVEL2	Operator fails to back-up CRD actuation
		3.00E-04	E50-SQV-CC-EQU_ALL	CCF of all components in group 'E50-SQV-CC-EQU'
		2.29E-01	R-M5-G31	RWCU/SDC RECOVERY
106	7.26E-12	1.97E-05	%FL_TBC-B21B-S-M5	
		1.00E-04	C63-CCFSOFTWARE	Common cause failure of software
		2.29E-01	R-M5-G31	RWCU/SDC RECOVERY
		1.61E-02	XXX-XHE-FO-LPMAKEUP	OP. FAILS TO RECOG. NEED FOR LOW PRESS. MAKEUP AFTER DEPRESSURIZATION
107	6.98E-12	4.73E-07	%FL_RB3-P30-L-M5	
		4.00E-03	C12-MOV-CC-F023	MOTOR OPERATED VALVE F023 FAILS TO OPEN
		2.29E-01	R-M5-G31	RWCU/SDC RECOVERY
		1.61E-02	XXX-XHE-FO-LPMAKEUP	OP. FAILS TO RECOG. NEED FOR LOW PRESS. MAKEUP AFTER DEPRESSURIZATION
108	6.98E-12	4.73E-07	%FL_RB3-P30-L-M5	
		4.00E-03	C12-MOV-OO-F024	MOTOR OPERATED VALVE F024 FAILS TO CLOSE
		2.29E-01	R-M5-G31	RWCU/SDC RECOVERY
		1.61E-02	XXX-XHE-FO-LPMAKEUP	OP. FAILS TO RECOG. NEED FOR LOW PRESS. MAKEUP AFTER DEPRESSURIZATION

Table 13.7-3

Results - Internal Flooding Shutdown Cutset Report

Cutsets with Descriptions Report **Flooding Shutdown** **Core Damage Frequency = 5.21E-09Top 200 Cutsets**				
109	6.98E-12	4.73E-07	%FL_RB3-P30-L-M5	
		4.00E-03	C12-MOV-OO-F062A	MOTOR OPERATED VALVE F062A FAILS TO CLOSE
		2.29E-01	R-M5-G31	RWCU/SDC RECOVERY
		1.61E-02	XXX-XHE-FO-LPMAKEUP	OP. FAILS TO RECOG. NEED FOR LOW PRESS. MAKEUP AFTER DEPRESSURIZATION
110	6.98E-12	4.73E-07	%FL_RB3-P30-L-M5	
		4.00E-03	C12-MOV-OO-F062B	MOTOR OPERATED VALVE F062B FAILS TO CLOSE
		2.29E-01	R-M5-G31	RWCU/SDC RECOVERY
		1.61E-02	XXX-XHE-FO-LPMAKEUP	OP. FAILS TO RECOG. NEED FOR LOW PRESS. MAKEUP AFTER DEPRESSURIZATION
111	6.95E-12	4.73E-07	%FL_RB3-P30-L-M5	
		3.21E-02	C12-XHE-FO-LEVEL2	Operator fails to back-up CRD actuation
		2.00E-03	G21-MP_-FS-PLP	MOTOR-DRIVEN LPI PUMP FAILS TO START
		2.29E-01	R-M5-G31	RWCU/SDC RECOVERY
112	6.77E-12	1.97E-05	%FL_TBC-B21B-S-M5	
		3.00E-05	C63-DTM-FC-ESFLG_ALL	CCF of all components in group 'C63-DTM-FC-ESFLG'
		5.00E-02	MS-TOP2	TWO DPVs FAIL TO OPEN (MANUAL)
		2.29E-01	R-M5-G31	RWCU/SDC RECOVERY
113	6.72E-12	5.87E-06	%FL_SF-P41A-L-M5	
		1.00E-04	C63-CCFSOFTWARE	Common cause failure of software
		5.00E-02	MS-TOP2	TWO DPVs FAIL TO OPEN (MANUAL)
		2.29E-01	R-M5-G31	RWCU/SDC RECOVERY

Table 13.7-3

Results - Internal Flooding Shutdown Cutset Report

Cutsets with Descriptions Report **Flooding Shutdown** **Core Damage Frequency = 5.21E-09Top 200 Cutsets**				
114	6.72E-12	5.87E-06	%FL_SF-P41B-L-M5	
		1.00E-04	C63-CCFSOFTWARE	Common cause failure of software
		5.00E-02	MS-TOP2	TWO DPVs FAIL TO OPEN (MANUAL)
		2.29E-01	R-M5-G31	RWCU/SDC RECOVERY
115	6.70E-12	2.05E-07	%FL_TB1-U43-L-M6U	
		1.50E-04	E50-SQV-CC-INJ_ALL	CCF of all components in group 'E50-SQV-CC-INJ'
		2.18E-01	R-M6-G31	FAILURE TO RECOVER RWCU/SDC
116	6.58E-12	1.19E-05	%FL_SF-P41A-S-M5O	
		1.50E-04	B21-SQV-CC_ALL	CCF of all components in group 'B21-SQV-CC'
		2.29E-01	R-M5-G31	RWCU/SDC RECOVERY
		1.61E-02	XXX-XHE-FO-LPMAKEUP	OP. FAILS TO RECOG. NEED FOR LOW PRESS. MAKEUP AFTER DEPRESSURIZATION
117	6.58E-12	1.19E-05	%FL_SF-P41A-S-M5O	
		1.50E-04	E50-SQV-CC-INJ_ALL	CCF of all components in group 'E50-SQV-CC-INJ'
		2.29E-01	R-M5-G31	RWCU/SDC RECOVERY
		1.61E-02	XXX-XHE-FO-LPMAKEUP	OP. FAILS TO RECOG. NEED FOR LOW PRESS. MAKEUP AFTER DEPRESSURIZATION
118	6.58E-12	1.19E-05	%FL_SF-P41B-S-M5O	
		1.50E-04	B21-SQV-CC_ALL	CCF of all components in group 'B21-SQV-CC'
		2.29E-01	R-M5-G31	RWCU/SDC RECOVERY
		1.61E-02	XXX-XHE-FO-LPMAKEUP	OP. FAILS TO RECOG. NEED FOR LOW PRESS. MAKEUP AFTER DEPRESSURIZATION

Table 13.7-3

Results - Internal Flooding Shutdown Cutset Report

Cutsets with Descriptions Report **Flooding Shutdown** **Core Damage Frequency = 5.21E-09Top 200 Cutsets**				
119	6.58E-12	1.19E-05	%FL_SF-P41B-S-M5O	
		1.50E-04	E50-SQV-CC-INJ_ALL	CCF of all components in group 'E50-SQV-CC-INJ'
		2.29E-01	R-M5-G31	RWCU/SDC RECOVERY
		1.61E-02	XXX-XHE-FO-LPMAKEUP	OP. FAILS TO RECOG. NEED FOR LOW PRESS. MAKEUP AFTER DEPRESSURIZATION
120	6.40E-12	6.08E-06	%FL_TBC-B21B-S-M6U	
		3.00E-04	E50-SQV-CC-EQU_ALL	CCF of all components in group 'E50-SQV-CC-EQU'
		2.18E-01	R-M6-G31	FAILURE TO RECOVER RWCU/SDC
		1.61E-02	XXX-XHE-FO-LPMAKEUP	OP. FAILS TO RECOG. NEED FOR LOW PRESS. MAKEUP AFTER DEPRESSURIZATION
121	6.39E-12	3.31E-06	%FL_FW1-G21-S-M5O	
		3.21E-02	C12-XHE-FO-LEVEL2	Operator fails to back-up CRD actuation
		2.63E-04	E50-BV_-OC-F004A	MAINTENANCE VALVE F004A PLUGS/TRANSFERS CLOSED
		2.29E-01	R-M5-G31	RWCU/SDC RECOVERY
122	6.39E-12	3.31E-06	%FL_FW1-G21-S-M5O	
		3.21E-02	C12-XHE-FO-LEVEL2	Operator fails to back-up CRD actuation
		2.63E-04	E50-BV_-OC-F004D	MAINTENANCE VALVE F004D PLUGS/TRANSFERS CLOSED
		2.29E-01	R-M5-G31	RWCU/SDC RECOVERY
123	6.38E-12	6.08E-06	%FL_TBC-B21A-S-M6U	
		3.21E-02	C12-XHE-FO-LEVEL2	Operator fails to back-up CRD actuation
		1.50E-04	E50-SQV-CC-INJ_ALL	CCF of all components in group 'E50-SQV-CC-INJ'
		2.18E-01	R-M6-G31	FAILURE TO RECOVER RWCU/SDC

Table 13.7-3

Results - Internal Flooding Shutdown Cutset Report

Cutsets with Descriptions Report Flooding Shutdown Core Damage Frequency = 5.21E-09Top 200 Cutsets				
124	6.20E-12	9.02E-07	%FL_TB2-U43-L-M5	
		3.00E-05	C63-DTM-FC-ESFLG_ALL	CCF of all components in group 'C63-DTM-FC-ESFLG'
		2.29E-01	R-M5-G31	RWCU/SDC RECOVERY
125	6.08E-12	2.79E-07	%FL_TB2-U43-L-M6U	
		1.00E-04	C63-CCFSOFTWARE	Common cause failure of software
		2.18E-01	R-M6-G31	FAILURE TO RECOVER RWCU/SDC
126	5.90E-12	5.15E-06	%FL_SF-Y41-S-M5	
		1.00E-04	C63-CCFSOFTWARE	Common cause failure of software
		5.00E-02	MS-TOP2	TWO DPVs FAIL TO OPEN (MANUAL)
		2.29E-01	R-M5-G31	RWCU/SDC RECOVERY
127	5.61E-12	6.08E-06	%FL_TBC-B21B-S-M6U	
		2.63E-04	E50-BV_-OC-F004A	MAINTENANCE VALVE F004A PLUGS/TRANSFERS CLOSED
		2.18E-01	R-M6-G31	FAILURE TO RECOVER RWCU/SDC
		1.61E-02	XXX-XHE-FO-LPMAKEUP	OP. FAILS TO RECOG. NEED FOR LOW PRESS. MAKEUP AFTER DEPRESSURIZATION
128	5.61E-12	6.08E-06	%FL_TBC-B21B-S-M6U	
		2.63E-04	E50-BV_-OC-F004D	MAINTENANCE VALVE F004D PLUGS/TRANSFERS CLOSED
		2.18E-01	R-M6-G31	FAILURE TO RECOVER RWCU/SDC
		1.61E-02	XXX-XHE-FO-LPMAKEUP	OP. FAILS TO RECOG. NEED FOR LOW PRESS. MAKEUP AFTER DEPRESSURIZATION
129	5.60E-12	1.63E-07	%FL_TB1-U43-L-M5O	
		1.50E-04	B21-SQV-CC_ALL	CCF of all components in group 'B21-SQV-CC'
		2.29E-01	R-M5-G31	RWCU/SDC RECOVERY

Table 13.7-3

Results - Internal Flooding Shutdown Cutset Report

Cutsets with Descriptions Report Flooding Shutdown Core Damage Frequency = 5.21E-09Top 200 Cutsets				
130	5.60E-12	1.63E-07	%FL_TB1-U43-L-M5O	
		1.50E-04	E50-SQV-CC-INJ_ALL	CCF of all components in group 'E50-SQV-CC-INJ'
		2.29E-01	R-M5-G31	RWCU/SDC RECOVERY
131	5.60E-12	4.73E-07	%FL_RB3-P30-L-M5	
		3.21E-02	C12-XHE-FO-LEVEL2	Operator fails to back-up CRD actuation
		2.29E-01	R-M5-G31	RWCU/SDC RECOVERY
		1.61E-03	U43-XHE-FO-LPCI	OPERATOR FAILS TO ACTUATE U43 IN LPCI MODE
132	5.54E-12	2.10E-06	%FL_TB-U43-L-M5	
		3.84E-02	B32-TM-LOOPA-IND	ICS LOOP A IN TEST OR MAINTENANCE BY ITSELF
		3.00E-04	E50-SQV-CC-EQU_ALL	CCF of all components in group 'E50-SQV-CC-EQU'
		2.29E-01	R-M5-G31	RWCU/SDC RECOVERY
133	5.54E-12	2.10E-06	%FL_TB-U43-L-M5	
		3.84E-02	B32-TM-LOOPB-IND	ICS LOOP B IN TEST OR MAINTENANCE BY ITSELF
		3.00E-04	E50-SQV-CC-EQU_ALL	CCF of all components in group 'E50-SQV-CC-EQU'
		2.29E-01	R-M5-G31	RWCU/SDC RECOVERY
134	5.53E-12	4.83E-06	%FL_TBC-B21B-S-M5O	
		1.00E-04	C63-CCFSOFTWARE	Common cause failure of software
		5.00E-02	MS-TOP2	TWO DPVs FAIL TO OPEN (MANUAL)
		2.29E-01	R-M5-G31	RWCU/SDC RECOVERY

Table 13.7-3

Results - Internal Flooding Shutdown Cutset Report

Cutsets with Descriptions Report **Flooding Shutdown** **Core Damage Frequency = 5.21E-09Top 200 Cutsets**				
135	5.42E-12	4.73E-07	%FL_RB3-P30-L-M5	
		1.00E-03	BOPCWS-SYS-FAILS	BALANCE OF PLANT CHILLED WATER SYSTEM FAILS
		5.00E-02	MS-TOP2	TWO DPVs FAIL TO OPEN (MANUAL)
		2.29E-01	R-M5-G31	RWCU/SDC RECOVERY
136	5.42E-12	4.73E-06	%FL_SF-P10-S-M5	
		1.00E-04	C63-CCFSOFTWARE	Common cause failure of software
		5.00E-02	MS-TOP2	TWO DPVs FAIL TO OPEN (MANUAL)
		2.29E-01	R-M5-G31	RWCU/SDC RECOVERY
137	5.38E-12	4.86E-05	%FL_SF-P41A-S-M5	
		3.00E-05	C63-DTM-FC-ESFLG_ALL	CCF of all components in group 'C63-DTM-FC-ESFLG'
		2.29E-01	R-M5-G31	RWCU/SDC RECOVERY
		1.61E-02	XXX-XHE-FO-LPMAKEUP	OP. FAILS TO RECOG. NEED FOR LOW PRESS. MAKEUP AFTER DEPRESSURIZATION
138	5.38E-12	4.86E-05	%FL_SF-P41B-S-M5	
		3.00E-05	C63-DTM-FC-ESFLG_ALL	CCF of all components in group 'C63-DTM-FC-ESFLG'
		2.29E-01	R-M5-G31	RWCU/SDC RECOVERY
		1.61E-02	XXX-XHE-FO-LPMAKEUP	OP. FAILS TO RECOG. NEED FOR LOW PRESS. MAKEUP AFTER DEPRESSURIZATION
139	5.34E-12	4.83E-06	%FL_TBC-B21B-S-M5O	
		3.00E-04	E50-SQV-CC-EQU_ALL	CCF of all components in group 'E50-SQV-CC-EQU'
		2.29E-01	R-M5-G31	RWCU/SDC RECOVERY
		1.61E-02	XXX-XHE-FO-LPMAKEUP	OP. FAILS TO RECOG. NEED FOR LOW PRESS. MAKEUP AFTER DEPRESSURIZATION

Table 13.7-3

Results - Internal Flooding Shutdown Cutset Report

Cutsets with Descriptions Report Flooding Shutdown Core Damage Frequency = 5.21E-09Top 200 Cutsets				
140	5.33E-12	4.83E-06	%FL_TBC-B21A-S-M5O	
		1.50E-04	B21-SQV-CC_ALL	CCF of all components in group 'B21-SQV-CC'
		3.21E-02	C12-XHE-FO-LEVEL2	Operator fails to back-up CRD actuation
		2.29E-01	R-M5-G31	RWCU/SDC RECOVERY
141	5.33E-12	4.83E-06	%FL_TBC-B21A-S-M5O	
		3.21E-02	C12-XHE-FO-LEVEL2	Operator fails to back-up CRD actuation
		1.50E-04	E50-SQV-CC-INJ_ALL	CCF of all components in group 'E50-SQV-CC-INJ'
		2.29E-01	R-M5-G31	RWCU/SDC RECOVERY
142	5.32E-12	2.58E-05	%FL_TB1-P10-L-M5	
		1.80E-05	C63-LOG-FC-ESFLG_ALL	CCF of all components in group 'C63-LOG-FC-ESFLG'
		5.00E-02	MS-TOP2	TWO DPVs FAIL TO OPEN (MANUAL)
		2.29E-01	R-M5-G31	RWCU/SDC RECOVERY
143	5.31E-12	1.16E-07	%FL_RB3-P30-L-M5O	
		4.00E-03	C12-MOV-CC-F023	MOTOR OPERATED VALVE F023 FAILS TO OPEN
		5.00E-02	MS-TOP2	TWO DPVs FAIL TO OPEN (MANUAL)
		2.29E-01	R-M5-G31	RWCU/SDC RECOVERY
144	5.31E-12	1.16E-07	%FL_RB3-P30-L-M5O	
		4.00E-03	C12-MOV-OO-F024	MOTOR OPERATED VALVE F024 FAILS TO CLOSE
		5.00E-02	MS-TOP2	TWO DPVs FAIL TO OPEN (MANUAL)
		2.29E-01	R-M5-G31	RWCU/SDC RECOVERY

Table 13.7-3

Results - Internal Flooding Shutdown Cutset Report

Cutsets with Descriptions Report **Flooding Shutdown** **Core Damage Frequency = 5.21E-09Top 200 Cutsets**				
145	5.31E-12	1.16E-07	%FL_RB3-P30-L-M5O	
		4.00E-03	C12-MOV-OO-F062A	MOTOR OPERATED VALVE F062A FAILS TO CLOSE
		5.00E-02	MS-TOP2	TWO DPVs FAIL TO OPEN (MANUAL)
		2.29E-01	R-M5-G31	RWCU/SDC RECOVERY
146	5.31E-12	1.16E-07	%FL_RB3-P30-L-M5O	
		4.00E-03	C12-MOV-OO-F062B	MOTOR OPERATED VALVE F062B FAILS TO CLOSE
		5.00E-02	MS-TOP2	TWO DPVs FAIL TO OPEN (MANUAL)
		2.29E-01	R-M5-G31	RWCU/SDC RECOVERY
147	5.26E-12	1.50E-05	%FL_SF-P41A-S-M6U	
		1.00E-04	C63-CCFSOFTWARE	Common cause failure of software
		2.18E-01	R-M6-G31	FAILURE TO RECOVER RWCU/SDC
		1.61E-02	XXX-XHE-FO-LPMAKEUP	OP. FAILS TO RECOG. NEED FOR LOW PRESS. MAKEUP AFTER DEPRESSURIZATION
148	5.26E-12	1.50E-05	%FL_SF-P41B-S-M6U	
		1.00E-04	C63-CCFSOFTWARE	Common cause failure of software
		2.18E-01	R-M6-G31	FAILURE TO RECOVER RWCU/SDC
		1.61E-02	XXX-XHE-FO-LPMAKEUP	OP. FAILS TO RECOG. NEED FOR LOW PRESS. MAKEUP AFTER DEPRESSURIZATION
149	5.24E-12	4.73E-07	%FL_RB3-P30-L-M5	
		4.84E-02	C12-BV_-RE-F064	MISPOSITION OF OPEN VALVE F064
		1.00E-03	G21-UV_-OO-F331A	CHECK VALVE F331A FAILS TO CLOSE
		2.29E-01	R-M5-G31	RWCU/SDC RECOVERY

Table 13.7-3

Results - Internal Flooding Shutdown Cutset Report

Cutsets with Descriptions Report **Flooding Shutdown** **Core Damage Frequency = 5.21E-09Top 200 Cutsets**				
150	5.24E-12	4.73E-07	%FL_RB3-P30-L-M5	
		4.84E-02	C12-BV_-RE-F064	MISPOSITION OF OPEN VALVE F064
		1.00E-03	G21-UV_-OO-F331B	CHECK VALVE F331B FAILS TO CLOSE
		2.29E-01	R-M5-G31	RWCU/SDC RECOVERY
151	5.22E-12	4.73E-07	%FL_RB3-P30-L-M5	
		3.21E-02	C12-XHE-FO-LEVEL2	Operator fails to back-up CRD actuation
		1.50E-03	R21-NSC-TM-ANCA	ADG BUS A IN TEST OR MAINTENANCE
		2.29E-01	R-M5-G31	RWCU/SDC RECOVERY
152	5.18E-12	1.14E-06	%FL_RBCNT-E50A-L-M5	
		3.84E-02	B32-TM-LOOPA-IND	ICS LOOP A IN TEST OR MAINTENANCE BY ITSELF
		3.21E-02	C12-XHE-FO-LEVEL2	Operator fails to back-up CRD actuation
		2.29E-01	R-M5-G31	RWCU/SDC RECOVERY
		1.61E-02	XXX-XHE-FO-LPMAKEUP	OP. FAILS TO RECOG. NEED FOR LOW PRESS. MAKEUP AFTER DEPRESSURIZATION
153	5.18E-12	1.14E-06	%FL_RBCNT-E50A-L-M5	
		3.84E-02	B32-TM-LOOPB-IND	ICS LOOP B IN TEST OR MAINTENANCE BY ITSELF
		3.21E-02	C12-XHE-FO-LEVEL2	Operator fails to back-up CRD actuation
		2.29E-01	R-M5-G31	RWCU/SDC RECOVERY
		1.61E-02	XXX-XHE-FO-LPMAKEUP	OP. FAILS TO RECOG. NEED FOR LOW PRESS. MAKEUP AFTER DEPRESSURIZATION

Table 13.7-3

Results - Internal Flooding Shutdown Cutset Report

Cutsets with Descriptions Report **Flooding Shutdown** **Core Damage Frequency = 5.21E-09Top 200 Cutsets**				
154	5.18E-12	1.14E-06	%FL_RBCNT-E50D-L-M5	
		3.84E-02	B32-TM-LOOPA-IND	ICS LOOP A IN TEST OR MAINTENANCE BY ITSELF
		3.21E-02	C12-XHE-FO-LEVEL2	Operator fails to back-up CRD actuation
		2.29E-01	R-M5-G31	RWCU/SDC RECOVERY
		1.61E-02	XXX-XHE-FO-LPMAKEUP	OP. FAILS TO RECOG. NEED FOR LOW PRESS. MAKEUP AFTER DEPRESSURIZATION
155	5.18E-12	1.14E-06	%FL_RBCNT-E50D-L-M5	
		3.84E-02	B32-TM-LOOPB-IND	ICS LOOP B IN TEST OR MAINTENANCE BY ITSELF
		3.21E-02	C12-XHE-FO-LEVEL2	Operator fails to back-up CRD actuation
		2.29E-01	R-M5-G31	RWCU/SDC RECOVERY
		1.61E-02	XXX-XHE-FO-LPMAKEUP	OP. FAILS TO RECOG. NEED FOR LOW PRESS. MAKEUP AFTER DEPRESSURIZATION
156	5.06E-12	2.21E-07	%FL_TB2-U43-L-M5O	
		1.00E-04	C63-CCFSOFTWARE	Common cause failure of software
		2.29E-01	R-M5-G31	RWCU/SDC RECOVERY
157	4.97E-12	3.54E-07	%FL_RBCNT-E50A-L-M6U	
		4.00E-03	C12-MOV-CC-F023	MOTOR OPERATED VALVE F023 FAILS TO OPEN
		2.18E-01	R-M6-G31	FAILURE TO RECOVER RWCU/SDC
		1.61E-02	XXX-XHE-FO-LPMAKEUP	OP. FAILS TO RECOG. NEED FOR LOW PRESS. MAKEUP AFTER DEPRESSURIZATION

Table 13.7-3

Results - Internal Flooding Shutdown Cutset Report

Cutsets with Descriptions Report **Flooding Shutdown** **Core Damage Frequency = 5.21E-09Top 200 Cutsets**				
158	4.97E-12	3.54E-07	%FL_RBCNT-E50A-L-M6U	
		4.00E-03	C12-MOV-OO-F024	MOTOR OPERATED VALVE F024 FAILS TO CLOSE
		2.18E-01	R-M6-G31	FAILURE TO RECOVER RWCU/SDC
		1.61E-02	XXX-XHE-FO-LPMAKEUP	OP. FAILS TO RECOG. NEED FOR LOW PRESS. MAKEUP AFTER DEPRESSURIZATION
159	4.97E-12	3.54E-07	%FL_RBCNT-E50A-L-M6U	
		4.00E-03	C12-MOV-OO-F062A	MOTOR OPERATED VALVE F062A FAILS TO CLOSE
		2.18E-01	R-M6-G31	FAILURE TO RECOVER RWCU/SDC
		1.61E-02	XXX-XHE-FO-LPMAKEUP	OP. FAILS TO RECOG. NEED FOR LOW PRESS. MAKEUP AFTER DEPRESSURIZATION
160	4.97E-12	3.54E-07	%FL_RBCNT-E50A-L-M6U	
		4.00E-03	C12-MOV-OO-F062B	MOTOR OPERATED VALVE F062B FAILS TO CLOSE
		2.18E-01	R-M6-G31	FAILURE TO RECOVER RWCU/SDC
		1.61E-02	XXX-XHE-FO-LPMAKEUP	OP. FAILS TO RECOG. NEED FOR LOW PRESS. MAKEUP AFTER DEPRESSURIZATION
161	4.97E-12	3.54E-07	%FL_RBCNT-E50D-L-M6U	
		4.00E-03	C12-MOV-CC-F023	MOTOR OPERATED VALVE F023 FAILS TO OPEN
		2.18E-01	R-M6-G31	FAILURE TO RECOVER RWCU/SDC
		1.61E-02	XXX-XHE-FO-LPMAKEUP	OP. FAILS TO RECOG. NEED FOR LOW PRESS. MAKEUP AFTER DEPRESSURIZATION

Table 13.7-3

Results - Internal Flooding Shutdown Cutset Report

Cutsets with Descriptions Report **Flooding Shutdown** **Core Damage Frequency = 5.21E-09Top 200 Cutsets**				
162	4.97E-12	3.54E-07	%FL_RBCNT-E50D-L-M6U	
		4.00E-03	C12-MOV-OO-F024	MOTOR OPERATED VALVE F024 FAILS TO CLOSE
		2.18E-01	R-M6-G31	FAILURE TO RECOVER RWCU/SDC
		1.61E-02	XXX-XHE-FO-LPMAKEUP	OP. FAILS TO RECOG. NEED FOR LOW PRESS. MAKEUP AFTER DEPRESSURIZATION
163	4.97E-12	3.54E-07	%FL_RBCNT-E50D-L-M6U	
		4.00E-03	C12-MOV-OO-F062A	MOTOR OPERATED VALVE F062A FAILS TO CLOSE
		2.18E-01	R-M6-G31	FAILURE TO RECOVER RWCU/SDC
		1.61E-02	XXX-XHE-FO-LPMAKEUP	OP. FAILS TO RECOG. NEED FOR LOW PRESS. MAKEUP AFTER DEPRESSURIZATION
164	4.97E-12	3.54E-07	%FL_RBCNT-E50D-L-M6U	
		4.00E-03	C12-MOV-OO-F062B	MOTOR OPERATED VALVE F062B FAILS TO CLOSE
		2.18E-01	R-M6-G31	FAILURE TO RECOVER RWCU/SDC
		1.61E-02	XXX-XHE-FO-LPMAKEUP	OP. FAILS TO RECOG. NEED FOR LOW PRESS. MAKEUP AFTER DEPRESSURIZATION
165	4.85E-12	2.10E-06	%FL_TB-U43-L-M5	
		3.84E-02	B32-TM-LOOPA-IND	ICS LOOP A IN TEST OR MAINTENANCE BY ITSELF
		2.63E-04	E50-BV_-OC-F004A	MAINTENANCE VALVE F004A PLUGS/TRANSFERS CLOSED
		2.29E-01	R-M5-G31	RWCU/SDC RECOVERY
166	4.85E-12	2.10E-06	%FL_TB-U43-L-M5	
		3.84E-02	B32-TM-LOOPA-IND	ICS LOOP A IN TEST OR MAINTENANCE BY ITSELF
		2.63E-04	E50-BV_-OC-F004D	MAINTENANCE VALVE F004D PLUGS/TRANSFERS CLOSED
		2.29E-01	R-M5-G31	RWCU/SDC RECOVERY

Table 13.7-3

Results - Internal Flooding Shutdown Cutset Report

Cutsets with Descriptions Report Flooding Shutdown Core Damage Frequency = 5.21E-09Top 200 Cutsets				
167	4.85E-12	2.10E-06	%FL_TB-U43-L-M5	
		3.84E-02	B32-TM-LOOPB-IND	ICS LOOP B IN TEST OR MAINTENANCE BY ITSELF
		2.63E-04	E50-BV_-OC-F004A	MAINTENANCE VALVE F004A PLUGS/TRANSFERS CLOSED
		2.29E-01	R-M5-G31	RWCU/SDC RECOVERY
168	4.85E-12	2.10E-06	%FL_TB-U43-L-M5	
		3.84E-02	B32-TM-LOOPB-IND	ICS LOOP B IN TEST OR MAINTENANCE BY ITSELF
		2.63E-04	E50-BV_-OC-F004D	MAINTENANCE VALVE F004D PLUGS/TRANSFERS CLOSED
		2.29E-01	R-M5-G31	RWCU/SDC RECOVERY
169	4.84E-12	2.82E-06	%FL_TBC-G31-S-M5O	
		1.50E-04	B21-SQV-CC_ALL	CCF of all components in group 'B21-SQV-CC'
		5.00E-02	MS-TOP2	TWO DPVs FAIL TO OPEN (MANUAL)
		2.29E-01	R-M5-G31	RWCU/SDC RECOVERY
170	4.84E-12	6.58E-06	%FL_FB-3-G21-L-M5	
		3.21E-02	C12-XHE-FO-LEVEL2	Operator fails to back-up CRD actuation
		1.00E-04	C63-CCFSOFTWARE	Common cause failure of software
		2.29E-01	R-M5-G31	RWCU/SDC RECOVERY
171	4.68E-12	4.83E-06	%FL_TBC-B21B-S-M5O	
		2.63E-04	E50-BV_-OC-F004A	MAINTENANCE VALVE F004A PLUGS/TRANSFERS CLOSED
		2.29E-01	R-M5-G31	RWCU/SDC RECOVERY
		1.61E-02	XXX-XHE-FO-LPMAKEUP	OP. FAILS TO RECOG. NEED FOR LOW PRESS. MAKEUP AFTER DEPRESSURIZATION

Table 13.7-3

Results - Internal Flooding Shutdown Cutset Report

Cutsets with Descriptions Report **Flooding Shutdown** **Core Damage Frequency = 5.21E-09Top 200 Cutsets**				
172	4.68E-12	4.83E-06	%FL_TBC-B21B-S-M5O	
		2.63E-04	E50-BV_-OC-F004D	MAINTENANCE VALVE F004D PLUGS/TRANSFERS CLOSED
		2.29E-01	R-M5-G31	RWCU/SDC RECOVERY
		1.61E-02	XXX-XHE-FO-LPMAKEUP	OP. FAILS TO RECOG. NEED FOR LOW PRESS. MAKEUP AFTER DEPRESSURIZATION
173	4.55E-12	6.62E-07	%FL_TB1-U43-L-M5	
		3.00E-05	C63-DTM-FC-ESFLG_ALL	CCF of all components in group 'C63-DTM-FC-ESFLG'
		2.29E-01	R-M5-G31	RWCU/SDC RECOVERY
174	4.47E-12	2.05E-07	%FL_TB1-U43-L-M6U	
		1.00E-04	C63-CCFSOFTWARE	Common cause failure of software
		2.18E-01	R-M6-G31	FAILURE TO RECOVER RWCU/SDC
175	4.39E-12	1.19E-05	%FL_SF-P41A-S-M5O	
		1.00E-04	C63-CCFSOFTWARE	Common cause failure of software
		2.29E-01	R-M5-G31	RWCU/SDC RECOVERY
		1.61E-02	XXX-XHE-FO-LPMAKEUP	OP. FAILS TO RECOG. NEED FOR LOW PRESS. MAKEUP AFTER DEPRESSURIZATION
176	4.39E-12	1.19E-05	%FL_SF-P41B-S-M5O	
		1.00E-04	C63-CCFSOFTWARE	Common cause failure of software
		2.29E-01	R-M5-G31	RWCU/SDC RECOVERY
		1.61E-02	XXX-XHE-FO-LPMAKEUP	OP. FAILS TO RECOG. NEED FOR LOW PRESS. MAKEUP AFTER DEPRESSURIZATION

Table 13.7-3

Results - Internal Flooding Shutdown Cutset Report

Cutsets with Descriptions Report Flooding Shutdown Core Damage Frequency = 5.21E-09Top 200 Cutsets				
177	4.38E-12	4.17E-06	%FL_FW1-G21-S-M6U	
		3.21E-02	C12-XHE-FO-LEVEL2	Operator fails to back-up CRD actuation
		1.50E-04	E50-SQV-CC-INJ_ALL	CCF of all components in group 'E50-SQV-CC-INJ'
		2.18E-01	R-M6-G31	FAILURE TO RECOVER RWCU/SDC
178	4.34E-12	1.97E-05	%FL_TBC-B21A-S-M5	
		3.21E-02	C12-XHE-FO-LEVEL2	Operator fails to back-up CRD actuation
		3.00E-05	C63-DTM-FC-ESFLG_ALL	CCF of all components in group 'C63-DTM-FC-ESFLG'
		2.29E-01	R-M5-G31	RWCU/SDC RECOVERY
179	4.26E-12	6.51E-07	%FL_TB-U43-L-M6U	
		3.00E-05	C63-DTM-FC-ESFLG_ALL	CCF of all components in group 'C63-DTM-FC-ESFLG'
		2.18E-01	R-M6-G31	FAILURE TO RECOVER RWCU/SDC
180	4.25E-12	6.08E-06	%FL_TBC-B21A-S-M6U	
		3.21E-02	C12-XHE-FO-LEVEL2	Operator fails to back-up CRD actuation
		1.00E-04	C63-CCFSOFTWARE	Common cause failure of software
		2.18E-01	R-M6-G31	FAILURE TO RECOVER RWCU/SDC
181	4.24E-12	1.15E-05	%FL_TBC-G31-S-M5	
		1.00E-04	C63-CCFSOFTWARE	Common cause failure of software
		2.29E-01	R-M5-G31	RWCU/SDC RECOVERY
		1.61E-02	XXX-XHE-FO-LPMAKEUP	OP. FAILS TO RECOG. NEED FOR LOW PRESS. MAKEUP AFTER DEPRESSURIZATION

Table 13.7-3

Results - Internal Flooding Shutdown Cutset Report

Cutsets with Descriptions Report **Flooding Shutdown** **Core Damage Frequency = 5.21E-09Top 200 Cutsets**				
182	4.14E-12	2.81E-07	%FL_RBCNT-E50A-L-M5O	
		4.00E-03	C12-MOV-CC-F023	MOTOR OPERATED VALVE F023 FAILS TO OPEN
		2.29E-01	R-M5-G31	RWCU/SDC RECOVERY
		1.61E-02	XXX-XHE-FO-LPMAKEUP	OP. FAILS TO RECOG. NEED FOR LOW PRESS. MAKEUP AFTER DEPRESSURIZATION
183	4.14E-12	2.81E-07	%FL_RBCNT-E50A-L-M5O	
		4.00E-03	C12-MOV-OO-F024	MOTOR OPERATED VALVE F024 FAILS TO CLOSE
		2.29E-01	R-M5-G31	RWCU/SDC RECOVERY
		1.61E-02	XXX-XHE-FO-LPMAKEUP	OP. FAILS TO RECOG. NEED FOR LOW PRESS. MAKEUP AFTER DEPRESSURIZATION
184	4.14E-12	2.81E-07	%FL_RBCNT-E50A-L-M5O	
		4.00E-03	C12-MOV-OO-F062A	MOTOR OPERATED VALVE F062A FAILS TO CLOSE
		2.29E-01	R-M5-G31	RWCU/SDC RECOVERY
		1.61E-02	XXX-XHE-FO-LPMAKEUP	OP. FAILS TO RECOG. NEED FOR LOW PRESS. MAKEUP AFTER DEPRESSURIZATION
185	4.14E-12	2.81E-07	%FL_RBCNT-E50A-L-M5O	
		4.00E-03	C12-MOV-OO-F062B	MOTOR OPERATED VALVE F062B FAILS TO CLOSE
		2.29E-01	R-M5-G31	RWCU/SDC RECOVERY
		1.61E-02	XXX-XHE-FO-LPMAKEUP	OP. FAILS TO RECOG. NEED FOR LOW PRESS. MAKEUP AFTER DEPRESSURIZATION

Table 13.7-3

Results - Internal Flooding Shutdown Cutset Report

Cutsets with Descriptions Report **Flooding Shutdown** **Core Damage Frequency = 5.21E-09Top 200 Cutsets**				
186	4.14E-12	2.81E-07	%FL_RBCNT-E50D-L-M5O	
		4.00E-03	C12-MOV-CC-F023	MOTOR OPERATED VALVE F023 FAILS TO OPEN
		2.29E-01	R-M5-G31	RWCU/SDC RECOVERY
		1.61E-02	XXX-XHE-FO-LPMAKEUP	OP. FAILS TO RECOG. NEED FOR LOW PRESS. MAKEUP AFTER DEPRESSURIZATION
187	4.14E-12	2.81E-07	%FL_RBCNT-E50D-L-M5O	
		4.00E-03	C12-MOV-OO-F024	MOTOR OPERATED VALVE F024 FAILS TO CLOSE
		2.29E-01	R-M5-G31	RWCU/SDC RECOVERY
		1.61E-02	XXX-XHE-FO-LPMAKEUP	OP. FAILS TO RECOG. NEED FOR LOW PRESS. MAKEUP AFTER DEPRESSURIZATION
188	4.14E-12	2.81E-07	%FL_RBCNT-E50D-L-M5O	
		4.00E-03	C12-MOV-OO-F062A	MOTOR OPERATED VALVE F062A FAILS TO CLOSE
		2.29E-01	R-M5-G31	RWCU/SDC RECOVERY
		1.61E-02	XXX-XHE-FO-LPMAKEUP	OP. FAILS TO RECOG. NEED FOR LOW PRESS. MAKEUP AFTER DEPRESSURIZATION
189	4.14E-12	2.81E-07	%FL_RBCNT-E50D-L-M5O	
		4.00E-03	C12-MOV-OO-F062B	MOTOR OPERATED VALVE F062B FAILS TO CLOSE
		2.29E-01	R-M5-G31	RWCU/SDC RECOVERY
		1.61E-02	XXX-XHE-FO-LPMAKEUP	OP. FAILS TO RECOG. NEED FOR LOW PRESS. MAKEUP AFTER DEPRESSURIZATION

Table 13.7-3

Results - Internal Flooding Shutdown Cutset Report

Cutsets with Descriptions Report **Flooding Shutdown** **Core Damage Frequency = 5.21E-09Top 200 Cutsets**				
190	4.09E-12	1.19E-05	%FL_SF-P41A-S-M5O	
		3.00E-05	C63-DTM-FC-ESFLG_ALL	CCF of all components in group 'C63-DTM-FC-ESFLG'
		5.00E-02	MS-TOP2	TWO DPVs FAIL TO OPEN (MANUAL)
		2.29E-01	R-M5-G31	RWCU/SDC RECOVERY
191	4.09E-12	1.19E-05	%FL_SF-P41B-S-M5O	
		3.00E-05	C63-DTM-FC-ESFLG_ALL	CCF of all components in group 'C63-DTM-FC-ESFLG'
		5.00E-02	MS-TOP2	TWO DPVs FAIL TO OPEN (MANUAL)
		2.29E-01	R-M5-G31	RWCU/SDC RECOVERY
192	4.09E-12	4.73E-07	%FL_RB3-P30-L-M5	
		4.84E-02	C12-BV_-RE-F013A	MISPOSITION OF VALVE F013A
		4.84E-02	C12-BV_-RE-F013B	MISPOSITION OF VALVE F013B
		2.29E-01	R-M5-G31	RWCU/SDC RECOVERY
		1.61E-02	XXX-XHE-FO-LPMAKEUP	OP. FAILS TO RECOG. NEED FOR LOW PRESS. MAKEUP AFTER DEPRESSURIZATION
193	4.09E-12	4.73E-07	%FL_RB3-P30-L-M5	
		4.84E-02	C12-BV_-RE-F013A	MISPOSITION OF VALVE F013A
		4.84E-02	C12-BV_-RE-F015B	MISPOSITION OF VALVE F015B
		2.29E-01	R-M5-G31	RWCU/SDC RECOVERY
		1.61E-02	XXX-XHE-FO-LPMAKEUP	OP. FAILS TO RECOG. NEED FOR LOW PRESS. MAKEUP AFTER DEPRESSURIZATION

Table 13.7-3

Results - Internal Flooding Shutdown Cutset Report

Cutsets with Descriptions Report **Flooding Shutdown** **Core Damage Frequency = 5.21E-09Top 200 Cutsets**				
194	4.09E-12	4.73E-07	%FL_RB3-P30-L-M5	
		4.84E-02	C12-BV_-RE-F013B	MISPOSITION OF VALVE F013B
		4.84E-02	C12-BV_-RE-F015A	MISPOSITION OF VALVE F015A
		2.29E-01	R-M5-G31	RWCU/SDC RECOVERY
		1.61E-02	XXX-XHE-FO-LPMAKEUP	OP. FAILS TO RECOG. NEED FOR LOW PRESS. MAKEUP AFTER DEPRESSURIZATION
195	4.09E-12	4.73E-07	%FL_RB3-P30-L-M5	
		4.84E-02	C12-BV_-RE-F015A	MISPOSITION OF VALVE F015A
		4.84E-02	C12-BV_-RE-F015B	MISPOSITION OF VALVE F015B
		2.29E-01	R-M5-G31	RWCU/SDC RECOVERY
		1.61E-02	XXX-XHE-FO-LPMAKEUP	OP. FAILS TO RECOG. NEED FOR LOW PRESS. MAKEUP AFTER DEPRESSURIZATION
196	4.06E-12	1.97E-05	%FL_TBC-B21B-S-M5	
		1.80E-05	C63-LOG-FC-ESFLG_ALL	CCF of all components in group 'C63-LOG-FC-ESFLG'
		5.00E-02	MS-TOP2	TWO DPVs FAIL TO OPEN (MANUAL)
		2.29E-01	R-M5-G31	RWCU/SDC RECOVERY
197	3.95E-12	1.15E-05	%FL_TBC-G31-S-M5	
		3.00E-05	C63-DTM-FC-ESFLG_ALL	CCF of all components in group 'C63-DTM-FC-ESFLG'
		5.00E-02	MS-TOP2	TWO DPVs FAIL TO OPEN (MANUAL)
		2.29E-01	R-M5-G31	RWCU/SDC RECOVERY

Table 13.7-3

Results - Internal Flooding Shutdown Cutset Report

Cutsets with Descriptions Report **Flooding Shutdown** **Core Damage Frequency = 5.21E-09Top 200 Cutsets**				
198	3.74E-12	3.55E-06	%FL_TBC-G31-S-M6U	
		3.00E-04	E50-SQV-CC-EQU_ALL	CCF of all components in group 'E50-SQV-CC-EQU'
		2.18E-01	R-M6-G31	FAILURE TO RECOVER RWCU/SDC
		1.61E-02	XXX-XHE-FO-LPMAKEUP	OP. FAILS TO RECOG. NEED FOR LOW PRESS. MAKEUP AFTER DEPRESSURIZATION
199	3.73E-12	1.63E-07	%FL_TB1-U43-L-M5O	
		1.00E-04	C63-CCFSOFTWARE	Common cause failure of software
		2.29E-01	R-M5-G31	RWCU/SDC RECOVERY
200	3.72E-12	9.02E-07	%FL_TB2-U43-L-M5	
		1.80E-05	C63-LOG-FC-ESFLG_ALL	CCF of all components in group 'C63-LOG-FC-ESFLG'
		2.29E-01	R-M5-G31	RWCU/SDC RECOVERY
		1.00E-04	C63-CCFSOFTWARE	Common cause failure of software
		2.29E-01	R-M5-G31	RWCU/SDC RECOVERY

Table 13.7-4

Results - Internal Flooding At-Power Importance Measure Report

F-V and RAW Importance Measures Report (F-V = Fussell-Vesely Importance Measure; RAW = Risk Achievement Worth Importance Measure) Flooding At-Power Core Damage Frequency = 6.95E-09				
Event Name	**Probability**	**Fus Ves**	**RAW**	**Description**
B21-ACV-OC-F111A	2.40E-05	1.93E-05	1.8	AIR-TESTABLE CHECK VALVE F111A FAILS TO REMAIN OPEN
B21-ACV-OC-F111B	2.40E-05	2.72E-05	2.13	AIR-TESTABLE CHECK VALVE F111B FAILS TO REMAIN OPEN
B21-ACV-OO-F001A	2.00E-03	0.00E+00	1	F001A FAILS TO CLOSE
B21-ACV-OO-F001B	2.00E-03	0.00E+00	1	F001B FAILS TO CLOSE
B21-ACV-OO-F001C	2.00E-03	0.00E+00	1	F001C FAILS TO CLOSE
B21-ACV-OO-F001D	2.00E-03	0.00E+00	1	F001D FAILS TO CLOSE
B21-ACV-OO-F002A	2.00E-03	0.00E+00	1	F002A FAILS TO CLOSE
B21-ACV-OO-F002B	2.00E-03	0.00E+00	1	F002B FAILS TO CLOSE
B21-ACV-OO-F002C	2.00E-03	0.00E+00	1	F002C FAILS TO CLOSE
B21-ACV-OO-F002D	2.00E-03	0.00E+00	1	F002D FAILS TO CLOSE
B21-MOV-OC-F100A	3.36E-06	1.02E-06	1.3	PROCESS OPERATED VALVE F100A FAILS TO REMAIN OPEN
B21-MOV-OC-F101A	3.36E-06	1.02E-06	1.3	PROCESS OPERATED VALVE F101A FAILS TO REMAIN OPEN
B21-SQV-CC_1_2	2.38E-05	6.63E-04	28.83	CCF of two components: B21-SQV-CC-F004A & B21-SQV-CC-F004B
B21-SQV-CC_1_2_3	7.94E-07	2.19E-05	28.61	CCF of three components: B21-SQV-CC-F004A & B21-SQV-CC-F004B & B21-SQV-CC-F004C
B21-SQV-CC_1_2_4	7.94E-07	2.19E-05	28.61	CCF of three components: B21-SQV-CC-F004A & B21-SQV-CC-F004B & B21-SQV-CC-F004D
B21-SQV-CC_1_2_5	7.94E-07	2.19E-05	28.61	CCF of three components: B21-SQV-CC-F004A & B21-SQV-CC-F004B & B21-SQV-CC-F004E

Table 13.7-4

Results - Internal Flooding At-Power Importance Measure Report

F-V and RAW Importance Measures Report (F-V = Fussell-Vesely Importance Measure; RAW = Risk Achievement Worth Importance Measure) Flooding At-Power Core Damage Frequency = 6.95E-09				
Event Name	**Probability**	**Fus Ves**	**RAW**	**Description**
B21-SQV-CC_1_2_6	7.94E-07	2.19E-05	28.61	CCF of three components: B21-SQV-CC-F004A & B21-SQV-CC-F004B & B21-SQV-CC-F004F
B21-SQV-CC_1_2_7	7.94E-07	2.19E-05	28.61	CCF of three components: B21-SQV-CC-F004A & B21-SQV-CC-F004B & B21-SQV-CC-F004G
B21-SQV-CC_1_2_8	7.94E-07	2.19E-05	28.61	CCF of three components: B21-SQV-CC-F004A & B21-SQV-CC-F004B & B21-SQV-CC-F004H
B21-SQV-CC_1_3	2.38E-05	6.63E-04	28.83	CCF of two components: B21-SQV-CC-F004A & B21-SQV-CC-F004C
B21-SQV-CC_1_3_4	7.94E-07	2.19E-05	28.61	CCF of three components: B21-SQV-CC-F004A & B21-SQV-CC-F004C & B21-SQV-CC-F004D
B21-SQV-CC_1_3_5	7.94E-07	2.19E-05	28.61	CCF of three components: B21-SQV-CC-F004A & B21-SQV-CC-F004C & B21-SQV-CC-F004E
B21-SQV-CC_1_3_6	7.94E-07	2.19E-05	28.61	CCF of three components: B21-SQV-CC-F004A & B21-SQV-CC-F004C & B21-SQV-CC-F004F
B21-SQV-CC_1_3_7	7.94E-07	2.19E-05	28.61	CCF of three components: B21-SQV-CC-F004A & B21-SQV-CC-F004C & B21-SQV-CC-F004G
B21-SQV-CC_1_3_8	7.94E-07	2.19E-05	28.61	CCF of three components: B21-SQV-CC-F004A & B21-SQV-CC-F004C & B21-SQV-CC-F004H
B21-SQV-CC_1_4	2.38E-05	6.63E-04	28.83	CCF of two components: B21-SQV-CC-F004A & B21-SQV-CC-F004D
B21-SQV-CC_1_4_5	7.94E-07	2.19E-05	28.61	CCF of three components: B21-SQV-CC-F004A & B21-SQV-CC-F004D & B21-SQV-CC-F004E
B21-SQV-CC_1_4_6	7.94E-07	2.19E-05	28.61	CCF of three components: B21-SQV-CC-F004A & B21-SQV-CC-F004D & B21-SQV-CC-F004F

Table 13.7-4

Results - Internal Flooding At-Power Importance Measure Report

F-V and RAW Importance Measures Report (F-V = Fussell-Vesely Importance Measure; RAW = Risk Achievement Worth Importance Measure) Flooding At-Power Core Damage Frequency = 6.95E-09				
Event Name	**Probability**	**Fus Ves**	**RAW**	**Description**
B21-SQV-CC_1_4_7	7.94E-07	2.19E-05	28.61	CCF of three components: B21-SQV-CC-F004A & B21-SQV-CC-F004D & B21-SQV-CC-F004G
B21-SQV-CC_1_4_8	7.94E-07	2.19E-05	28.61	CCF of three components: B21-SQV-CC-F004A & B21-SQV-CC-F004D & B21-SQV-CC-F004H
B21-SQV-CC_1_5	2.38E-05	6.82E-04	29.62	CCF of two components: B21-SQV-CC-F004A & B21-SQV-CC-F004E
B21-SQV-CC_1_5_6	7.94E-07	2.19E-05	28.61	CCF of three components: B21-SQV-CC-F004A & B21-SQV-CC-F004E & B21-SQV-CC-F004F
B21-SQV-CC_1_5_7	7.94E-07	2.19E-05	28.61	CCF of three components: B21-SQV-CC-F004A & B21-SQV-CC-F004E & B21-SQV-CC-F004G
B21-SQV-CC_1_5_8	7.94E-07	2.19E-05	28.61	CCF of three components: B21-SQV-CC-F004A & B21-SQV-CC-F004E & B21-SQV-CC-F004H
B21-SQV-CC_1_6	2.38E-05	6.82E-04	29.62	CCF of two components: B21-SQV-CC-F004A & B21-SQV-CC-F004F
B21-SQV-CC_1_6_7	7.94E-07	2.19E-05	28.61	CCF of three components: B21-SQV-CC-F004A & B21-SQV-CC-F004F & B21-SQV-CC-F004G
B21-SQV-CC_1_6_8	7.94E-07	2.19E-05	28.61	CCF of three components: B21-SQV-CC-F004A & B21-SQV-CC-F004F & B21-SQV-CC-F004H
B21-SQV-CC_1_7	2.38E-05	6.82E-04	29.62	CCF of two components: B21-SQV-CC-F004A & B21-SQV-CC-F004G
B21-SQV-CC_1_7_8	7.94E-07	2.19E-05	28.61	CCF of three components: B21-SQV-CC-F004A & B21-SQV-CC-F004G & B21-SQV-CC-F004H
B21-SQV-CC_1_8	2.38E-05	6.82E-04	29.62	CCF of two components: B21-SQV-CC-F004A & B21-SQV-CC-F004H
B21-SQV-CC_2_3	2.38E-05	6.63E-04	28.83	CCF of two components: B21-SQV-CC-F004B & B21-SQV-CC-F004C

Table 13.7-4

Results - Internal Flooding At-Power Importance Measure Report

F-V and RAW Importance Measures Report (F-V = Fussell-Vesely Importance Measure; RAW = Risk Achievement Worth Importance Measure) Flooding At-Power Core Damage Frequency = 6.95E-09				
Event Name	**Probability**	**Fus Ves**	**RAW**	**Description**
B21-SQV-CC_2_3_4	7.94E-07	2.19E-05	28.61	CCF of three components: B21-SQV-CC-F004B & B21-SQV-CC-F004C & B21-SQV-CC-F004D
B21-SQV-CC_2_3_5	7.94E-07	2.19E-05	28.61	CCF of three components: B21-SQV-CC-F004B & B21-SQV-CC-F004C & B21-SQV-CC-F004E
B21-SQV-CC_2_3_6	7.94E-07	2.19E-05	28.61	CCF of three components: B21-SQV-CC-F004B & B21-SQV-CC-F004C & B21-SQV-CC-F004F
B21-SQV-CC_2_3_7	7.94E-07	2.19E-05	28.61	CCF of three components: B21-SQV-CC-F004B & B21-SQV-CC-F004C & B21-SQV-CC-F004G
B21-SQV-CC_2_3_8	7.94E-07	2.19E-05	28.61	CCF of three components: B21-SQV-CC-F004B & B21-SQV-CC-F004C & B21-SQV-CC-F004H
B21-SQV-CC_2_4	2.38E-05	6.63E-04	28.83	CCF of two components: B21-SQV-CC-F004B & B21-SQV-CC-F004D
B21-SQV-CC_2_4_5	7.94E-07	2.19E-05	28.61	CCF of three components: B21-SQV-CC-F004B & B21-SQV-CC-F004D & B21-SQV-CC-F004E
B21-SQV-CC_2_4_6	7.94E-07	2.19E-05	28.61	CCF of three components: B21-SQV-CC-F004B & B21-SQV-CC-F004D & B21-SQV-CC-F004F
B21-SQV-CC_2_4_7	7.94E-07	2.19E-05	28.61	CCF of three components: B21-SQV-CC-F004B & B21-SQV-CC-F004D & B21-SQV-CC-F004G
B21-SQV-CC_2_4_8	7.94E-07	2.19E-05	28.61	CCF of three components: B21-SQV-CC-F004B & B21-SQV-CC-F004D & B21-SQV-CC-F004H
B21-SQV-CC_2_5	2.38E-05	6.82E-04	29.62	CCF of two components: B21-SQV-CC-F004B & B21-SQV-CC-F004E
B21-SQV-CC_2_5_6	7.94E-07	2.19E-05	28.61	CCF of three components: B21-SQV-CC-F004B & B21-SQV-CC-F004E & B21-SQV-CC-F004F

Table 13.7-4

Results - Internal Flooding At-Power Importance Measure Report

F-V and RAW Importance Measures Report (F-V = Fussell-Vesely Importance Measure; RAW = Risk Achievement Worth Importance Measure) Flooding At-Power Core Damage Frequency = 6.95E-09				
Event Name	**Probability**	**Fus Ves**	**RAW**	**Description**
B21-SQV-CC_2_5_7	7.94E-07	2.19E-05	28.61	CCF of three components: B21-SQV-CC-F004B & B21-SQV-CC-F004E & B21-SQV-CC-F004G
B21-SQV-CC_2_5_8	7.94E-07	2.19E-05	28.61	CCF of three components: B21-SQV-CC-F004B & B21-SQV-CC-F004E & B21-SQV-CC-F004H
B21-SQV-CC_2_6	2.38E-05	6.82E-04	29.62	CCF of two components: B21-SQV-CC-F004B & B21-SQV-CC-F004F
B21-SQV-CC_2_6_7	7.94E-07	2.19E-05	28.61	CCF of three components: B21-SQV-CC-F004B & B21-SQV-CC-F004F & B21-SQV-CC-F004G
B21-SQV-CC_2_6_8	7.94E-07	2.19E-05	28.61	CCF of three components: B21-SQV-CC-F004B & B21-SQV-CC-F004F & B21-SQV-CC-F004H
B21-SQV-CC_2_7	2.38E-05	6.82E-04	29.62	CCF of two components: B21-SQV-CC-F004B & B21-SQV-CC-F004G
B21-SQV-CC_2_7_8	7.94E-07	2.19E-05	28.61	CCF of three components: B21-SQV-CC-F004B & B21-SQV-CC-F004G & B21-SQV-CC-F004H
B21-SQV-CC_2_8	2.38E-05	6.82E-04	29.62	CCF of two components: B21-SQV-CC-F004B & B21-SQV-CC-F004H
B21-SQV-CC_3_4	2.38E-05	6.63E-04	28.83	CCF of two components: B21-SQV-CC-F004C & B21-SQV-CC-F004D
B21-SQV-CC_3_4_5	7.94E-07	2.19E-05	28.61	CCF of three components: B21-SQV-CC-F004C & B21-SQV-CC-F004D & B21-SQV-CC-F004E
B21-SQV-CC_3_4_6	7.94E-07	2.19E-05	28.61	CCF of three components: B21-SQV-CC-F004C & B21-SQV-CC-F004D & B21-SQV-CC-F004F
B21-SQV-CC_3_4_7	7.94E-07	2.19E-05	28.61	CCF of three components: B21-SQV-CC-F004C & B21-SQV-CC-F004D & B21-SQV-CC-F004G
B21-SQV-CC_3_4_8	7.94E-07	2.19E-05	28.61	CCF of three components: B21-SQV-CC-F004C & B21-SQV-CC-F004D & B21-SQV-CC-F004H

Table 13.7-4

Results - Internal Flooding At-Power Importance Measure Report

F-V and RAW Importance Measures Report (F-V = Fussell-Vesely Importance Measure; RAW = Risk Achievement Worth Importance Measure) Flooding At-Power Core Damage Frequency = 6.95E-09				
Event Name	**Probability**	**Fus Ves**	**RAW**	**Description**
B21-SQV-CC_3_5	2.38E-05	6.82E-04	29.62	CCF of two components: B21-SQV-CC-F004C & B21-SQV-CC-F004E
B21-SQV-CC_3_5_6	7.94E-07	2.19E-05	28.61	CCF of three components: B21-SQV-CC-F004C & B21-SQV-CC-F004E & B21-SQV-CC-F004F
B21-SQV-CC_3_5_7	7.94E-07	2.19E-05	28.61	CCF of three components: B21-SQV-CC-F004C & B21-SQV-CC-F004E & B21-SQV-CC-F004G
B21-SQV-CC_3_5_8	7.94E-07	2.19E-05	28.61	CCF of three components: B21-SQV-CC-F004C & B21-SQV-CC-F004E & B21-SQV-CC-F004H
B21-SQV-CC_3_6	2.38E-05	6.82E-04	29.62	CCF of two components: B21-SQV-CC-F004C & B21-SQV-CC-F004F
B21-SQV-CC_3_6_7	7.94E-07	2.19E-05	28.61	CCF of three components: B21-SQV-CC-F004C & B21-SQV-CC-F004F & B21-SQV-CC-F004G
B21-SQV-CC_3_6_8	7.94E-07	2.19E-05	28.61	CCF of three components: B21-SQV-CC-F004C & B21-SQV-CC-F004F & B21-SQV-CC-F004H
B21-SQV-CC_3_7	2.38E-05	6.82E-04	29.62	CCF of two components: B21-SQV-CC-F004C & B21-SQV-CC-F004G
B21-SQV-CC_3_7_8	7.94E-07	2.19E-05	28.61	CCF of three components: B21-SQV-CC-F004C & B21-SQV-CC-F004G & B21-SQV-CC-F004H
B21-SQV-CC_3_8	2.38E-05	6.82E-04	29.62	CCF of two components: B21-SQV-CC-F004C & B21-SQV-CC-F004H
B21-SQV-CC_4_5	2.38E-05	6.82E-04	29.62	CCF of two components: B21-SQV-CC-F004D & B21-SQV-CC-F004E
B21-SQV-CC_4_5_6	7.94E-07	2.19E-05	28.61	CCF of three components: B21-SQV-CC-F004D & B21-SQV-CC-F004E & B21-SQV-CC-F004F
B21-SQV-CC_4_5_7	7.94E-07	2.19E-05	28.61	CCF of three components: B21-SQV-CC-F004D & B21-SQV-CC-F004E & B21-SQV-CC-F004G

Table 13.7-4

Results - Internal Flooding At-Power Importance Measure Report

F-V and RAW Importance Measures Report (F-V = Fussell-Vesely Importance Measure; RAW = Risk Achievement Worth Importance Measure) Flooding At-Power Core Damage Frequency = 6.95E-09				
Event Name	**Probability**	**Fus Ves**	**RAW**	**Description**
B21-SQV-CC_4_5_8	7.94E-07	2.19E-05	28.61	CCF of three components: B21-SQV-CC-F004D & B21-SQV-CC-F004E & B21-SQV-CC-F004H
B21-SQV-CC_4_6	2.38E-05	6.82E-04	29.62	CCF of two components: B21-SQV-CC-F004D & B21-SQV-CC-F004F
B21-SQV-CC_4_6_7	7.94E-07	2.19E-05	28.61	CCF of three components: B21-SQV-CC-F004D & B21-SQV-CC-F004F & B21-SQV-CC-F004G
B21-SQV-CC_4_6_8	7.94E-07	2.19E-05	28.61	CCF of three components: B21-SQV-CC-F004D & B21-SQV-CC-F004F & B21-SQV-CC-F004H
B21-SQV-CC_4_7	2.38E-05	6.82E-04	29.62	CCF of two components: B21-SQV-CC-F004D & B21-SQV-CC-F004G
B21-SQV-CC_4_7_8	7.94E-07	2.19E-05	28.61	CCF of three components: B21-SQV-CC-F004D & B21-SQV-CC-F004G & B21-SQV-CC-F004H
B21-SQV-CC_4_8	2.38E-05	6.82E-04	29.62	CCF of two components: B21-SQV-CC-F004D & B21-SQV-CC-F004H
B21-SQV-CC_5_6	2.38E-05	1.88E-05	1.79	CCF of two components: B21-SQV-CC-F004E & B21-SQV-CC-F004F
B21-SQV-CC_5_7	2.38E-05	1.88E-05	1.79	CCF of two components: B21-SQV-CC-F004E & B21-SQV-CC-F004G
B21-SQV-CC_5_8	2.38E-05	1.88E-05	1.79	CCF of two components: B21-SQV-CC-F004E & B21-SQV-CC-F004H
B21-SQV-CC_6_7	2.38E-05	1.88E-05	1.79	CCF of two components: B21-SQV-CC-F004F & B21-SQV-CC-F004G
B21-SQV-CC_6_8	2.38E-05	1.88E-05	1.79	CCF of two components: B21-SQV-CC-F004F & B21-SQV-CC-F004H
B21-SQV-CC_7_8	2.38E-05	1.88E-05	1.79	CCF of two components: B21-SQV-CC-F004G & B21-SQV-CC-F004H
B21-SQV-CC_ALL	1.50E-04	6.17E-02	411.53	CCF of all components in group 'B21-SQV-CC'
B21-SQV-CC-F004A	3.00E-03	8.54E-02	29.38	EXPLOSIVE VALVE DPV F004A FAILS TO OPERATE
B21-SQV-CC-F004B	3.00E-03	8.54E-02	29.38	EXPLOSIVE VALVE DPV B FAILS TO OPERATE

Table 13.7-4

Results - Internal Flooding At-Power Importance Measure Report

F-V and RAW Importance Measures Report (F-V = Fussell-Vesely Importance Measure; RAW = Risk Achievement Worth Importance Measure) Flooding At-Power Core Damage Frequency = 6.95E-09				
Event Name	**Probability**	**Fus Ves**	**RAW**	**Description**
B21-SQV-CC-F004C	3.00E-03	8.54E-02	29.38	EXPLOSIVE VALVE DPV C FAILS TO OPERATE
B21-SQV-CC-F004D	3.00E-03	8.54E-02	29.38	EXPLOSIVE VALVE DPV D FAILS TO OPERATE
B21-SQV-CC-F004E	3.00E-03	3.32E-03	2.1	EXPLOSIVE VALVE DPV E FAILS TO OPERATE
B21-SQV-CC-F004F	3.00E-03	3.32E-03	2.1	EXPLOSIVE VALVE DPV F FAILS TO OPERATE
B21-SQV-CC-F004G	3.00E-03	3.32E-03	2.1	EXPLOSIVE VALVE DPV G FAILS TO OPERATE
B21-SQV-CC-F004H	3.00E-03	3.32E-03	2.1	EXPLOSIVE VALVE DPV H FAILS TO OPERATE
B21-SRV-CC_ALL	5.85E-04	6.82E-05	1.12	CCF of all components in group 'B21-SRV-CC'
B21-SRV-OO-ANYSRV1	6.00E-03	3.26E-03	1.54	SAFETY/RELIEF VALVE FAILS TO RE-CLOSE
B21-SRV-OO-ANYSRV10	6.00E-03	3.26E-03	1.54	SAFETY/RELIEF VALVE FAILS TO RE-CLOSE
B21-SRV-OO-ANYSRV11	6.00E-03	3.26E-03	1.54	SAFETY/RELIEF VALVE FAILS TO RE-CLOSE
B21-SRV-OO-ANYSRV12	6.00E-03	3.26E-03	1.54	SAFETY/RELIEF VALVE FAILS TO RE-CLOSE
B21-SRV-OO-ANYSRV13	6.00E-03	3.26E-03	1.54	SAFETY/RELIEF VALVE FAILS TO RE-CLOSE
B21-SRV-OO-ANYSRV14	6.00E-03	3.26E-03	1.54	SAFETY/RELIEF VALVE FAILS TO RE-CLOSE
B21-SRV-OO-ANYSRV15	6.00E-03	3.26E-03	1.54	SAFETY/RELIEF VALVE FAILS TO RE-CLOSE
B21-SRV-OO-ANYSRV16	6.00E-03	3.26E-03	1.54	SAFETY/RELIEF VALVE FAILS TO RE-CLOSE
B21-SRV-OO-ANYSRV17	6.00E-03	3.26E-03	1.54	SAFETY/RELIEF VALVE FAILS TO RE-CLOSE
B21-SRV-OO-ANYSRV18	6.00E-03	3.26E-03	1.54	SAFETY/RELIEF VALVE FAILS TO RE-CLOSE
B21-SRV-OO-ANYSRV2	6.00E-03	3.26E-03	1.54	SAFETY/RELIEF VALVE FAILS TO RE-CLOSE
B21-SRV-OO-ANYSRV3	6.00E-03	3.26E-03	1.54	SAFETY/RELIEF VALVE FAILS TO RE-CLOSE

Table 13.7-4

Results - Internal Flooding At-Power Importance Measure Report

F-V and RAW Importance Measures Report (F-V = Fussell-Vesely Importance Measure; RAW = Risk Achievement Worth Importance Measure) Flooding At-Power Core Damage Frequency = 6.95E-09				
Event Name	**Probability**	**Fus Ves**	**RAW**	**Description**
B21-SRV-OO-ANYSRV4	6.00E-03	3.26E-03	1.54	SAFETY/RELIEF VALVE FAILS TO RE-CLOSE
B21-SRV-OO-ANYSRV5	6.00E-03	3.26E-03	1.54	SAFETY/RELIEF VALVE FAILS TO RE-CLOSE
B21-SRV-OO-ANYSRV6	6.00E-03	3.26E-03	1.54	SAFETY/RELIEF VALVE FAILS TO RE-CLOSE
B21-SRV-OO-ANYSRV7	6.00E-03	3.26E-03	1.54	SAFETY/RELIEF VALVE FAILS TO RE-CLOSE
B21-SRV-OO-ANYSRV8	6.00E-03	3.26E-03	1.54	SAFETY/RELIEF VALVE FAILS TO RE-CLOSE
B21-SRV-OO-ANYSRV9	6.00E-03	3.26E-03	1.54	SAFETY/RELIEF VALVE FAILS TO RE-CLOSE
B21-SRV-OO-F006A	6.00E-03	6.19E-04	1.1	SAFETY/RELIEF VALVE F006A FAILS TO RE-CLOSE
B21-SRV-OO-F006B	6.00E-03	6.19E-04	1.1	SAFETY/RELIEF VALVE F006B FAILS TO RE-CLOSE
B21-SRV-OO-F006C	6.00E-03	6.19E-04	1.1	SAFETY/RELIEF VALVE F006C FAILS TO RE-CLOSE
B21-SRV-OO-F006D	6.00E-03	6.19E-04	1.1	SAFETY/RELIEF VALVE F006D FAILS TO RE-CLOSE
B21-SRV-OO-F006E	6.00E-03	6.19E-04	1.1	SAFETY/RELIEF VALVE F006E FAILS TO RE-CLOSE
B21-SRV-OO-F006F	6.00E-03	6.19E-04	1.1	SAFETY/RELIEF VALVE F006F FAILS TO RE-CLOSE
B21-SRV-OO-F006G	6.00E-03	6.19E-04	1.1	SAFETY/RELIEF VALVE F006G FAILS TO RE-CLOSE
B21-SRV-OO-F006H	6.00E-03	6.19E-04	1.1	SAFETY/RELIEF VALVE F006H FAILS TO RE-CLOSE
B21-SRV-OO-F006J	6.00E-03	6.19E-04	1.1	SAFETY/RELIEF VALVE F006J FAILS TO RE-CLOSE
B21-SRV-OO-F006K	6.00E-03	6.19E-04	1.1	SAFETY/RELIEF VALVE F006K FAILS TO RE-CLOSE
B21-UV_-CC-F102_1_2	2.99E-06	1.38E-05	5.57	CCF of two components: B21-UV_-CC-F102A & B21-UV_-CC-F102B
B21-UV_-CC-F102A	1.00E-04	1.55E-04	2.52	CHECK VALVE F102A FAILS TO OPEN
B21-UV_-CC-F102B	1.00E-04	1.96E-04	2.93	CHECK VALVE F102B FAILS TO OPEN

Table 13.7-4

Results - Internal Flooding At-Power Importance Measure Report

F-V and RAW Importance Measures Report

(F-V = Fussell-Vesely Importance Measure; RAW = Risk Achievement Worth Importance Measure)

Flooding At-Power

Core Damage Frequency = 6.95E-09

Event Name	Probability	Fus Ves	RAW	Description
B21-UV_-CC-F111_1_2	2.99E-06	1.38E-05	5.57	CCF of two components: B21-UV_-CC-F111A & B21-UV_-CC-F111B
B21-UV_-CC-F111A	1.00E-04	1.55E-04	2.52	CHECK VALVE F111A FAILS TO OPEN
B21-UV_-CC-F111B	1.00E-04	1.96E-04	2.93	CHECK VALVE F111B FAILS TO OPEN
B21-UV_-OC-F099A	4.80E-06	1.53E-06	1.31	CHECK VALVE F099A FAILS TO REMAIN OPEN
B21-UV_-OC-F102A	4.80E-06	1.53E-06	1.31	CHECK VALVE F102A FAILS TO REMAIN OPEN
B21-UV_-OC-F102B	4.80E-06	3.07E-06	1.61	CHECK VALVE F102B FAILS TO REMAIN OPEN
B21-UV_-OO-F102A	1.00E-03	0.00E+00	1	CHECK VALVE F102A FAILS TO CLOSE
B21-UV_-OO-F102B	1.00E-03	0.00E+00	1	CHECK VALVE F102B FAILS TO CLOSE
B21-UV_-RL-F102A	2.40E-05	0.00E+00	1	CHECK VALVE F102A REVERSE LEAKAGE
B21-UV_-RL-F102B	2.40E-05	0.00E+00	1	CHECK VALVE F102B REVERSE LEAKAGE
B21-XHE-FO-6OPEN	1.61E-03	2.32E-04	1.14	OPERATOR FAILS TO OPEN 6/10 SRVs
B32-ACC-FO-A105A	2.40E-06	9.79E-05	41.73	Nitrogen or Air Accumulator Fails
B32-ACC-FO-A105B	2.40E-06	9.79E-05	41.73	Nitrogen or Air Accumulator Fails
B32-HOV-OC-F001A	2.40E-06	4.46E-05	19.19	ELECTRO-HYDRAULIC VALVE FAILS TO REMAIN OPEN
B32-HOV-OC-F001B	2.40E-06	4.46E-05	19.19	ELECTRO-HYDRAULIC VALVE FAILS TO REMAIN OPEN
B32-HOV-OC-F001C	2.40E-06	4.46E-05	19.19	ELECTRO-HYDRAULIC VALVE FAILS TO REMAIN OPEN
B32-HOV-OC-F001D	2.40E-06	4.46E-05	19.19	ELECTRO-HYDRAULIC VALVE FAILS TO REMAIN OPEN
B32-HOV-OC-F004A	2.40E-06	4.46E-05	19.19	ELECTRO-HYDRAULIC VALVE FAILS TO REMAIN OPEN
B32-HOV-OC-F004B	2.40E-06	4.46E-05	19.19	ELECTRO-HYDRAULIC VALVE FAILS TO REMAIN OPEN

Table 13.7-4

Results - Internal Flooding At-Power Importance Measure Report

F-V and RAW Importance Measures Report

(F-V = Fussell-Vesely Importance Measure; RAW = Risk Achievement Worth Importance Measure)

Flooding At-Power

Core Damage Frequency = 6.95E-09

Event Name	Probability	Fus Ves	RAW	Description
B32-HOV-OC-F004C	2.40E-06	4.46E-05	19.19	ELECTRO-HYDRAULIC VALVE FAILS TO REMAIN OPEN
B32-HOV-OC-F004D	2.40E-06	4.46E-05	19.19	ELECTRO-HYDRAULIC VALVE FAILS TO REMAIN OPEN
B32-HX_-PG_1_2	9.02E-08	1.45E-05	157.68	CCF of two components: B32-HX_-PG-HX001A & B32-HX_-PG-HX001B
B32-HX_-PG_1_3	9.02E-08	1.45E-05	157.68	CCF of two components: B32-HX_-PG-HX001A & B32-HX_-PG-HX001C
B32-HX_-PG_1_4	9.02E-08	1.45E-05	157.68	CCF of two components: B32-HX_-PG-HX001A & B32-HX_-PG-HX001D
B32-HX_-PG_1_6	9.02E-08	1.45E-05	157.68	CCF of two components: B32-HX_-PG-HX001A & B32-HX_-PG-HX002B
B32-HX_-PG_1_7	9.02E-08	1.45E-05	157.68	CCF of two components: B32-HX_-PG-HX001A & B32-HX_-PG-HX002C
B32-HX_-PG_1_8	9.02E-08	1.45E-05	157.68	CCF of two components: B32-HX_-PG-HX001A & B32-HX_-PG-HX002D
B32-HX_-PG_2_3	9.02E-08	1.45E-05	157.68	CCF of two components: B32-HX_-PG-HX001B & B32-HX_-PG-HX001C
B32-HX_-PG_2_4	9.02E-08	1.45E-05	157.68	CCF of two components: B32-HX_-PG-HX001B & B32-HX_-PG-HX001D
B32-HX_-PG_2_5	9.02E-08	1.45E-05	157.68	CCF of two components: B32-HX_-PG-HX001B & B32-HX_-PG-HX002A
B32-HX_-PG_2_7	9.02E-08	1.45E-05	157.68	CCF of two components: B32-HX_-PG-HX001B & B32-HX_-PG-HX002C
B32-HX_-PG_2_8	9.02E-08	1.45E-05	157.68	CCF of two components: B32-HX_-PG-HX001B & B32-HX_-PG-HX002D
B32-HX_-PG_3_4	9.02E-08	1.45E-05	157.68	CCF of two components: B32-HX_-PG-HX001C & B32-HX_-PG-HX001D
B32-HX_-PG_3_5	9.02E-08	1.45E-05	157.68	CCF of two components: B32-HX_-PG-HX001C & B32-HX_-PG-HX002A
B32-HX_-PG_3_6	9.02E-08	1.45E-05	157.68	CCF of two components: B32-HX_-PG-HX001C & B32-HX_-PG-HX002B
B32-HX_-PG_3_8	9.02E-08	1.45E-05	157.68	CCF of two components: B32-HX_-PG-HX001C & B32-HX_-PG-HX002D
B32-HX_-PG_4_5	9.02E-08	1.45E-05	157.68	CCF of two components: B32-HX_-PG-HX001D & B32-HX_-PG-HX002A
B32-HX_-PG_4_6	9.02E-08	1.45E-05	157.68	CCF of two components: B32-HX_-PG-HX001D & B32-HX_-PG-HX002B

Table 13.7-4

Results - Internal Flooding At-Power Importance Measure Report

F-V and RAW Importance Measures Report (F-V = Fussell-Vesely Importance Measure; RAW = Risk Achievement Worth Importance Measure) Flooding At-Power Core Damage Frequency = 6.95E-09				
Event Name	**Probability**	**Fus Ves**	**RAW**	**Description**
B32-HX_-PG_4_7	9.02E-08	1.45E-05	157.68	CCF of two components: B32-HX_-PG-HX001D & B32-HX_-PG-HX002C
B32-HX_-PG_5_6	9.02E-08	1.45E-05	157.68	CCF of two components: B32-HX_-PG-HX002A & B32-HX_-PG-HX002B
B32-HX_-PG_5_7	9.02E-08	1.45E-05	157.68	CCF of two components: B32-HX_-PG-HX002A & B32-HX_-PG-HX002C
B32-HX_-PG_5_8	9.02E-08	1.45E-05	157.68	CCF of two components: B32-HX_-PG-HX002A & B32-HX_-PG-HX002D
B32-HX_-PG_6_7	9.02E-08	1.45E-05	157.68	CCF of two components: B32-HX_-PG-HX002B & B32-HX_-PG-HX002C
B32-HX_-PG_6_8	9.02E-08	1.45E-05	157.68	CCF of two components: B32-HX_-PG-HX002B & B32-HX_-PG-HX002D
B32-HX_-PG_7_8	9.02E-08	1.45E-05	157.68	CCF of two components: B32-HX_-PG-HX002C & B32-HX_-PG-HX002D
B32-HX_-PG_ALL	5.68E-07	1.06E-04	187.08	CCF of all components in group 'B32-HX_-PG'
B32-HX_-PG-HX001A	2.40E-05	5.39E-04	23.36	Heat Exchanger HX001A Plugs
B32-HX_-PG-HX001B	2.40E-05	5.39E-04	23.36	Heat Exchanger HX001B Plugs
B32-HX_-PG-HX001C	2.40E-05	5.39E-04	23.36	Heat Exchanger HX001C Plugs
B32-HX_-PG-HX001D	2.40E-05	5.39E-04	23.36	Heat Exchanger HX001D Plugs
B32-HX_-PG-HX002A	2.40E-05	5.39E-04	23.36	Heat Exchanger HX002A Plugs
B32-HX_-PG-HX002B	2.40E-05	5.39E-04	23.36	Heat Exchanger HX002B Plugs
B32-HX_-PG-HX002C	2.40E-05	5.39E-04	23.36	Heat Exchanger HX002A Plugs
B32-HX_-PG-HX002D	2.40E-05	5.39E-04	23.36	Heat Exchanger HX002D Plugs
B32-NONCONDENSE	1.00E+00	9.68E-02	1	Non condensable gasses form in ICS sufficiently to require venting
B32-NPO-CC-F105A	1.00E-04	1.95E-02	195.87	F105A Fails to Open
B32-NPO-CC-F105B	1.00E-04	1.95E-02	195.87	F105B fails to open

Table 13.7-4

Results - Internal Flooding At-Power Importance Measure Report

F-V and RAW Importance Measures Report (F-V = Fussell-Vesely Importance Measure; RAW = Risk Achievement Worth Importance Measure) Flooding At-Power Core Damage Frequency = 6.95E-09				
Event Name	**Probability**	**Fus Ves**	**RAW**	**Description**
B32-NPO-CC-XCONN_1_2	9.65E-06	3.52E-03	365.62	CCF of two components: B32-NPO-CC-F105A & B32-NPO-CC-F105B
B32-NPO-OC-F002A	2.40E-06	4.46E-05	19.19	F002A Spuriously closes
B32-NPO-OC-F002B	2.40E-06	4.46E-05	19.19	F002B Spuriously closes
B32-NPO-OC-F002C	2.40E-06	4.46E-05	19.19	F002C Spuriously closes
B32-NPO-OC-F002D	2.40E-06	4.46E-05	19.19	F002D Spuriously closes
B32-NPO-OC-F003A	2.40E-06	4.46E-05	19.19	F003A Spuriously closes
B32-NPO-OC-F003B	2.40E-06	4.46E-05	19.19	F003B Spuriously closes
B32-NPO-OC-F003C	2.40E-06	4.46E-05	19.19	F003C Spuriously closes
B32-NPO-OC-F003D	2.40E-06	4.46E-05	19.19	F003D Spuriously closes
B32-SOV-FD-F012A	1.00E-03	2.38E-05	1.02	F012A fails to open on demand
B32-SOV-FD-F012B	1.00E-03	2.38E-05	1.02	SOLENOID VALVE (FAILURE TO DE-ENERGIZE)
B32-SOV-FD-F012C	1.00E-03	2.38E-05	1.02	SOLENOID VALVE (FAILURE TO DE-ENERGIZE)
B32-SOV-FD-F012D	1.00E-03	2.38E-05	1.02	SOLENOID VALVE (FAILURE TO DE-ENERGIZE)
B32-SOV-FE-09/10_1_2	7.94E-06	2.76E-04	35.58	CCF of two components: B32-SOV-FE-F009A & B32-SOV-FE-F009B
B32-SOV-FE-09/10_1_2_3	2.65E-07	4.79E-06	18.75	CCF of three components: B32-SOV-FE-F009A & B32-SOV-FE-F009B & B32-SOV-FE-F009C
B32-SOV-FE-09/10_1_2_4	2.65E-07	4.79E-06	18.75	CCF of three components: B32-SOV-FE-F009A & B32-SOV-FE-F009B & B32-SOV-FE-F009D
B32-SOV-FE-09/10_1_2_5	2.65E-07	4.79E-06	18.75	CCF of three components: B32-SOV-FE-F009A & B32-SOV-FE-F009B & B32-SOV-FE-F010A

Table 13.7-4

Results - Internal Flooding At-Power Importance Measure Report

F-V and RAW Importance Measures Report (F-V = Fussell-Vesely Importance Measure; RAW = Risk Achievement Worth Importance Measure) Flooding At-Power Core Damage Frequency = 6.95E-09				
Event Name	**Probability**	**Fus Ves**	**RAW**	**Description**
B32-SOV-FE-09/10_1_2_6	2.65E-07	4.79E-06	18.75	CCF of three components: B32-SOV-FE-F009A & B32-SOV-FE-F009B & B32-SOV-FE-F010B
B32-SOV-FE-09/10_1_2_7	2.65E-07	4.79E-06	18.75	CCF of three components: B32-SOV-FE-F009A & B32-SOV-FE-F009B & B32-SOV-FE-F010C
B32-SOV-FE-09/10_1_2_8	2.65E-07	4.79E-06	18.75	CCF of three components: B32-SOV-FE-F009A & B32-SOV-FE-F009B & B32-SOV-FE-F010D
B32-SOV-FE-09/10_1_3	7.94E-06	2.76E-04	35.58	CCF of two components: B32-SOV-FE-F009A & B32-SOV-FE-F009C
B32-SOV-FE-09/10_1_3_4	2.65E-07	4.79E-06	18.75	CCF of three components: B32-SOV-FE-F009A & B32-SOV-FE-F009C & B32-SOV-FE-F009D
B32-SOV-FE-09/10_1_3_5	2.65E-07	4.79E-06	18.75	CCF of three components: B32-SOV-FE-F009A & B32-SOV-FE-F009C & B32-SOV-FE-F010A
B32-SOV-FE-09/10_1_3_6	2.65E-07	4.79E-06	18.75	CCF of three components: B32-SOV-FE-F009A & B32-SOV-FE-F009C & B32-SOV-FE-F010B
B32-SOV-FE-09/10_1_3_7	2.65E-07	4.79E-06	18.75	CCF of three components: B32-SOV-FE-F009A & B32-SOV-FE-F009C & B32-SOV-FE-F010C
B32-SOV-FE-09/10_1_3_8	2.65E-07	4.79E-06	18.75	CCF of three components: B32-SOV-FE-F009A & B32-SOV-FE-F009C & B32-SOV-FE-F010D
B32-SOV-FE-09/10_1_4	7.94E-06	2.76E-04	35.58	CCF of two components: B32-SOV-FE-F009A & B32-SOV-FE-F009D
B32-SOV-FE-09/10_1_4_5	2.65E-07	4.79E-06	18.75	CCF of three components: B32-SOV-FE-F009A & B32-SOV-FE-F009D & B32-SOV-FE-F010A
B32-SOV-FE-09/10_1_4_6	2.65E-07	4.79E-06	18.75	CCF of three components: B32-SOV-FE-F009A & B32-SOV-FE-F009D & B32-SOV-FE-F010B

Table 13.7-4

Results - Internal Flooding At-Power Importance Measure Report

F-V and RAW Importance Measures Report (F-V = Fussell-Vesely Importance Measure; RAW = Risk Achievement Worth Importance Measure) Flooding At-Power Core Damage Frequency = 6.95E-09				
Event Name	**Probability**	**Fus Ves**	**RAW**	**Description**
B32-SOV-FE-09/10_1_4_7	2.65E-07	4.79E-06	18.75	CCF of three components: B32-SOV-FE-F009A & B32-SOV-FE-F009D & B32-SOV-FE-F010C
B32-SOV-FE-09/10_1_4_8	2.65E-07	4.79E-06	18.75	CCF of three components: B32-SOV-FE-F009A & B32-SOV-FE-F009D & B32-SOV-FE-F010D
B32-SOV-FE-09/10_1_5	7.94E-06	1.63E-05	3.05	CCF of two components: B32-SOV-FE-F009A & B32-SOV-FE-F010A
B32-SOV-FE-09/10_1_5_6	2.65E-07	4.79E-06	18.75	CCF of three components: B32-SOV-FE-F009A & B32-SOV-FE-F010A & B32-SOV-FE-F010B
B32-SOV-FE-09/10_1_5_7	2.65E-07	4.79E-06	18.75	CCF of three components: B32-SOV-FE-F009A & B32-SOV-FE-F010A & B32-SOV-FE-F010C
B32-SOV-FE-09/10_1_5_8	2.65E-07	4.79E-06	18.75	CCF of three components: B32-SOV-FE-F009A & B32-SOV-FE-F010A & B32-SOV-FE-F010D
B32-SOV-FE-09/10_1_6	7.94E-06	2.76E-04	35.58	CCF of two components: B32-SOV-FE-F009A & B32-SOV-FE-F010B
B32-SOV-FE-09/10_1_6_7	2.65E-07	4.79E-06	18.75	CCF of three components: B32-SOV-FE-F009A & B32-SOV-FE-F010B & B32-SOV-FE-F010C
B32-SOV-FE-09/10_1_6_8	2.65E-07	4.79E-06	18.75	CCF of three components: B32-SOV-FE-F009A & B32-SOV-FE-F010B & B32-SOV-FE-F010D
B32-SOV-FE-09/10_1_7	7.94E-06	2.76E-04	35.58	CCF of two components: B32-SOV-FE-F009A & B32-SOV-FE-F010C
B32-SOV-FE-09/10_1_7_8	2.65E-07	4.79E-06	18.75	CCF of three components: B32-SOV-FE-F009A & B32-SOV-FE-F010C & B32-SOV-FE-F010D
B32-SOV-FE-09/10_1_8	7.94E-06	2.76E-04	35.58	CCF of two components: B32-SOV-FE-F009A & B32-SOV-FE-F010D
B32-SOV-FE-09/10_2_3	7.94E-06	2.76E-04	35.58	CCF of two components: B32-SOV-FE-F009B & B32-SOV-FE-F009C

Table 13.7-4

Results - Internal Flooding At-Power Importance Measure Report

F-V and RAW Importance Measures Report (F-V = Fussell-Vesely Importance Measure; RAW = Risk Achievement Worth Importance Measure) Flooding At-Power Core Damage Frequency = 6.95E-09				
Event Name	**Probability**	**Fus Ves**	**RAW**	**Description**
B32-SOV-FE-09/10_2_3_4	2.65E-07	4.79E-06	18.75	CCF of three components: B32-SOV-FE-F009B & B32-SOV-FE-F009C & B32-SOV-FE-F009D
B32-SOV-FE-09/10_2_3_5	2.65E-07	4.79E-06	18.75	CCF of three components: B32-SOV-FE-F009B & B32-SOV-FE-F009C & B32-SOV-FE-F010A
B32-SOV-FE-09/10_2_3_6	2.65E-07	4.79E-06	18.75	CCF of three components: B32-SOV-FE-F009B & B32-SOV-FE-F009C & B32-SOV-FE-F010B
B32-SOV-FE-09/10_2_3_7	2.65E-07	4.79E-06	18.75	CCF of three components: B32-SOV-FE-F009B & B32-SOV-FE-F009C & B32-SOV-FE-F010C
B32-SOV-FE-09/10_2_3_8	2.65E-07	4.79E-06	18.75	CCF of three components: B32-SOV-FE-F009B & B32-SOV-FE-F009C & B32-SOV-FE-F010D
B32-SOV-FE-09/10_2_4	7.94E-06	2.76E-04	35.58	CCF of two components: B32-SOV-FE-F009B & B32-SOV-FE-F009D
B32-SOV-FE-09/10_2_4_5	2.65E-07	4.79E-06	18.75	CCF of three components: B32-SOV-FE-F009B & B32-SOV-FE-F009D & B32-SOV-FE-F010A
B32-SOV-FE-09/10_2_4_6	2.65E-07	4.79E-06	18.75	CCF of three components: B32-SOV-FE-F009B & B32-SOV-FE-F009D & B32-SOV-FE-F010B
B32-SOV-FE-09/10_2_4_7	2.65E-07	4.79E-06	18.75	CCF of three components: B32-SOV-FE-F009B & B32-SOV-FE-F009D & B32-SOV-FE-F010C
B32-SOV-FE-09/10_2_4_8	2.65E-07	4.79E-06	18.75	CCF of three components: B32-SOV-FE-F009B & B32-SOV-FE-F009D & B32-SOV-FE-F010D
B32-SOV-FE-09/10_2_5	7.94E-06	2.76E-04	35.58	CCF of two components: B32-SOV-FE-F009B & B32-SOV-FE-F010A
B32-SOV-FE-09/10_2_5_6	2.65E-07	4.79E-06	18.75	CCF of three components: B32-SOV-FE-F009B & B32-SOV-FE-F010A & B32-SOV-FE-F010B

Table 13.7-4

Results - Internal Flooding At-Power Importance Measure Report

F-V and RAW Importance Measures Report (F-V = Fussell-Vesely Importance Measure; RAW = Risk Achievement Worth Importance Measure) Flooding At-Power Core Damage Frequency = 6.95E-09				
Event Name	**Probability**	**Fus Ves**	**RAW**	**Description**
B32-SOV-FE-09/10_2_5_7	2.65E-07	4.79E-06	18.75	CCF of three components: B32-SOV-FE-F009B & B32-SOV-FE-F010A & B32-SOV-FE-F010C
B32-SOV-FE-09/10_2_5_8	2.65E-07	4.79E-06	18.75	CCF of three components: B32-SOV-FE-F009B & B32-SOV-FE-F010A & B32-SOV-FE-F010D
B32-SOV-FE-09/10_2_6	7.94E-06	1.63E-05	3.05	CCF of two components: B32-SOV-FE-F009B & B32-SOV-FE-F010B
B32-SOV-FE-09/10_2_6_7	2.65E-07	4.79E-06	18.75	CCF of three components: B32-SOV-FE-F009B & B32-SOV-FE-F010B & B32-SOV-FE-F010C
B32-SOV-FE-09/10_2_6_8	2.65E-07	4.79E-06	18.75	CCF of three components: B32-SOV-FE-F009B & B32-SOV-FE-F010B & B32-SOV-FE-F010D
B32-SOV-FE-09/10_2_7	7.94E-06	2.76E-04	35.58	CCF of two components: B32-SOV-FE-F009B & B32-SOV-FE-F010C
B32-SOV-FE-09/10_2_7_8	2.65E-07	4.79E-06	18.75	CCF of three components: B32-SOV-FE-F009B & B32-SOV-FE-F010C & B32-SOV-FE-F010D
B32-SOV-FE-09/10_2_8	7.94E-06	2.76E-04	35.58	CCF of two components: B32-SOV-FE-F009B & B32-SOV-FE-F010D
B32-SOV-FE-09/10_3_4	7.94E-06	2.76E-04	35.58	CCF of two components: B32-SOV-FE-F009C & B32-SOV-FE-F009D
B32-SOV-FE-09/10_3_4_5	2.65E-07	4.79E-06	18.75	CCF of three components: B32-SOV-FE-F009C & B32-SOV-FE-F009D & B32-SOV-FE-F010A
B32-SOV-FE-09/10_3_4_6	2.65E-07	4.79E-06	18.75	CCF of three components: B32-SOV-FE-F009C & B32-SOV-FE-F009D & B32-SOV-FE-F010B
B32-SOV-FE-09/10_3_4_7	2.65E-07	4.79E-06	18.75	CCF of three components: B32-SOV-FE-F009C & B32-SOV-FE-F009D & B32-SOV-FE-F010C
B32-SOV-FE-09/10_3_4_8	2.65E-07	4.79E-06	18.75	CCF of three components: B32-SOV-FE-F009C & B32-SOV-FE-F009D & B32-SOV-FE-F010D

Table 13.7-4

Results - Internal Flooding At-Power Importance Measure Report

F-V and RAW Importance Measures Report (F-V = Fussell-Vesely Importance Measure; RAW = Risk Achievement Worth Importance Measure) Flooding At-Power Core Damage Frequency = 6.95E-09				
Event Name	**Probability**	**Fus Ves**	**RAW**	**Description**
B32-SOV-FE-09/10_3_5	7.94E-06	2.76E-04	35.58	CCF of two components: B32-SOV-FE-F009C & B32-SOV-FE-F010A
B32-SOV-FE-09/10_3_5_6	2.65E-07	4.79E-06	18.75	CCF of three components: B32-SOV-FE-F009C & B32-SOV-FE-F010A & B32-SOV-FE-F010B
B32-SOV-FE-09/10_3_5_7	2.65E-07	4.79E-06	18.75	CCF of three components: B32-SOV-FE-F009C & B32-SOV-FE-F010A & B32-SOV-FE-F010C
B32-SOV-FE-09/10_3_5_8	2.65E-07	4.79E-06	18.75	CCF of three components: B32-SOV-FE-F009C & B32-SOV-FE-F010A & B32-SOV-FE-F010D
B32-SOV-FE-09/10_3_6	7.94E-06	2.76E-04	35.58	CCF of two components: B32-SOV-FE-F009C & B32-SOV-FE-F010B
B32-SOV-FE-09/10_3_6_7	2.65E-07	4.79E-06	18.75	CCF of three components: B32-SOV-FE-F009C & B32-SOV-FE-F010B & B32-SOV-FE-F010C
B32-SOV-FE-09/10_3_6_8	2.65E-07	4.79E-06	18.75	CCF of three components: B32-SOV-FE-F009C & B32-SOV-FE-F010B & B32-SOV-FE-F010D
B32-SOV-FE-09/10_3_7	7.94E-06	1.63E-05	3.05	CCF of two components: B32-SOV-FE-F009C & B32-SOV-FE-F010C
B32-SOV-FE-09/10_3_7_8	2.65E-07	4.79E-06	18.75	CCF of three components: B32-SOV-FE-F009C & B32-SOV-FE-F010C & B32-SOV-FE-F010D
B32-SOV-FE-09/10_3_8	7.94E-06	2.76E-04	35.58	CCF of two components: B32-SOV-FE-F009C & B32-SOV-FE-F010D
B32-SOV-FE-09/10_4_5	7.94E-06	2.76E-04	35.58	CCF of two components: B32-SOV-FE-F009D & B32-SOV-FE-F010A
B32-SOV-FE-09/10_4_5_6	2.65E-07	4.79E-06	18.75	CCF of three components: B32-SOV-FE-F009D & B32-SOV-FE-F010A & B32-SOV-FE-F010B
B32-SOV-FE-09/10_4_5_7	2.65E-07	4.79E-06	18.75	CCF of three components: B32-SOV-FE-F009D & B32-SOV-FE-F010A & B32-SOV-FE-F010C

Table 13.7-4

Results - Internal Flooding At-Power Importance Measure Report

F-V and RAW Importance Measures Report

(F-V = Fussell-Vesely Importance Measure; RAW = Risk Achievement Worth Importance Measure)

Flooding At-Power

Core Damage Frequency = 6.95E-09

Event Name	Probability	Fus Ves	RAW	Description
B32-SOV-FE-09/10_4_5_8	2.65E-07	4.79E-06	18.75	CCF of three components: B32-SOV-FE-F009D & B32-SOV-FE-F010A & B32-SOV-FE-F010D
B32-SOV-FE-09/10_4_6	7.94E-06	2.76E-04	35.58	CCF of two components: B32-SOV-FE-F009D & B32-SOV-FE-F010B
B32-SOV-FE-09/10_4_6_7	2.65E-07	4.79E-06	18.75	CCF of three components: B32-SOV-FE-F009D & B32-SOV-FE-F010B & B32-SOV-FE-F010C
B32-SOV-FE-09/10_4_6_8	2.65E-07	4.79E-06	18.75	CCF of three components: B32-SOV-FE-F009D & B32-SOV-FE-F010B & B32-SOV-FE-F010D
B32-SOV-FE-09/10_4_7	7.94E-06	2.76E-04	35.58	CCF of two components: B32-SOV-FE-F009D & B32-SOV-FE-F010C
B32-SOV-FE-09/10_4_7_8	2.65E-07	4.79E-06	18.75	CCF of three components: B32-SOV-FE-F009D & B32-SOV-FE-F010C & B32-SOV-FE-F010D
B32-SOV-FE-09/10_4_8	7.94E-06	1.63E-05	3.05	CCF of two components: B32-SOV-FE-F009D & B32-SOV-FE-F010D
B32-SOV-FE-09/10_5_6	7.94E-06	2.76E-04	35.58	CCF of two components: B32-SOV-FE-F010A & B32-SOV-FE-F010B
B32-SOV-FE-09/10_5_6_7	2.65E-07	4.79E-06	18.75	CCF of three components: B32-SOV-FE-F010A & B32-SOV-FE-F010B & B32-SOV-FE-F010C
B32-SOV-FE-09/10_5_6_8	2.65E-07	4.79E-06	18.75	CCF of three components: B32-SOV-FE-F010A & B32-SOV-FE-F010B & B32-SOV-FE-F010D
B32-SOV-FE-09/10_5_7	7.94E-06	2.76E-04	35.58	CCF of two components: B32-SOV-FE-F010A & B32-SOV-FE-F010C
B32-SOV-FE-09/10_5_7_8	2.65E-07	4.79E-06	18.75	CCF of three components: B32-SOV-FE-F010A & B32-SOV-FE-F010C & B32-SOV-FE-F010D
B32-SOV-FE-09/10_5_8	7.94E-06	2.76E-04	35.58	CCF of two components: B32-SOV-FE-F010A & B32-SOV-FE-F010D
B32-SOV-FE-09/10_6_7	7.94E-06	2.76E-04	35.58	CCF of two components: B32-SOV-FE-F010B & B32-SOV-FE-F010C

Table 13.7-4

Results - Internal Flooding At-Power Importance Measure Report

F-V and RAW Importance Measures Report

(F-V = Fussell-Vesely Importance Measure; RAW = Risk Achievement Worth Importance Measure)

Flooding At-Power

Core Damage Frequency = 6.95E-09

Event Name	Probability	Fus Ves	RAW	Description
B32-SOV-FE-09/10_6_7_8	2.65E-07	4.79E-06	18.75	CCF of three components: B32-SOV-FE-F010B & B32-SOV-FE-F010C & B32-SOV-FE-F010D
B32-SOV-FE-09/10_6_8	7.94E-06	2.76E-04	35.58	CCF of two components: B32-SOV-FE-F010B & B32-SOV-FE-F010D
B32-SOV-FE-09/10_7_8	7.94E-06	2.76E-04	35.58	CCF of two components: B32-SOV-FE-F010C & B32-SOV-FE-F010D
B32-SOV-FE-09/10_ALL	5.00E-05	1.89E-03	38.65	CCF of all components in group 'B32-SOV-FE-09/10'
B32-SOV-FE-F009A	1.00E-03	4.63E-03	5.61	F009A fails to open on demand
B32-SOV-FE-F009B	1.00E-03	4.63E-03	5.61	SOLENOID VALVE (FAILURE TO ENERGIZE)
B32-SOV-FE-F009C	1.00E-03	4.63E-03	5.61	SOLENOID VALVE (FAILURE TO ENERGIZE)
B32-SOV-FE-F009D	1.00E-03	4.63E-03	5.61	SOLENOID VALVE (FAILURE TO ENERGIZE)
B32-SOV-FE-F010A	1.00E-03	4.63E-03	5.61	F010A fails to open on demand
B32-SOV-FE-F010B	1.00E-03	4.63E-03	5.61	SOLENOID VALVE (FAILURE TO ENERGIZE)
B32-SOV-FE-F010C	1.00E-03	4.63E-03	5.61	SOLENOID VALVE (FAILURE TO ENERGIZE)
B32-SOV-FE-F010D	1.00E-03	4.63E-03	5.61	SOLENOID VALVE (FAILURE TO ENERGIZE)
B32-SQV-CC-F104A	3.00E-03	6.21E-02	21.64	F104A FAILS TO OPEN
B32-SQV-CC-F104B	3.00E-03	6.21E-02	21.64	F104B FAILS TO OPEN
B32-SQV-CC-XCONN_1_2	3.33E-04	1.32E-02	40.66	CCF of two components: B32-SQV-CC-F104A & B32-SQV-CC-F104B
B32-TM-LOOPA-IND	3.84E-02	9.90E-03	1.25	ICS LOOP A IN TEST OR MAINTENANCE BY ITSELF
B32-TM-LOOPA-MULT	1.37E-03	1.43E-03	2.04	ICS LOOP A IN TEST OR MAINTENANCE, MULTIPLE LOOPS
B32-TM-LOOPB-IND	3.84E-02	9.90E-03	1.25	ICS LOOP B IN TEST OR MAINTENANCE BY ITSELF

Table 13.7-4

Results - Internal Flooding At-Power Importance Measure Report

F-V and RAW Importance Measures Report (F-V = Fussell-Vesely Importance Measure; RAW = Risk Achievement Worth Importance Measure) Flooding At-Power Core Damage Frequency = 6.95E-09				
Event Name	**Probability**	**Fus Ves**	**RAW**	**Description**
B32-TM-LOOPB-MULT	1.37E-03	1.43E-03	2.04	ICS LOOP B IN TEST OR MAINTENANCE, MULTIPLE LOOPS
B32-TM-LOOPC-IND	3.84E-02	9.90E-03	1.25	ICS LOOP C IN TEST OR MAINTENANCE BY ITSELF
B32-TM-LOOPC-MULT	1.37E-03	1.43E-03	2.04	ICS LOOP C IN TEST OR MAINTENANCE, MULTIPLE LOOPS
B32-TM-LOOPD-IND	3.84E-02	9.90E-03	1.25	ICS LOOP D IN TEST OR MAINTENANCE BY ITSELF
B32-TM-LOOPD-MULT	1.37E-03	1.43E-03	2.04	ICS LOOP D IN TEST OR MAINTENANCE, MULTIPLE LOOPS
B32-UV_-OO-F105A	1.00E-03	4.52E-02	46.12	CHECK VALVE FAILS TO CLOSE
B32-UV_-OO-F105B	1.00E-03	4.52E-02	46.12	CHECK VALVE FAILS TO CLOSE
B32-UV_-OO-XCONN-ACC_1_2	2.67E-05	2.20E-03	83.31	CCF of two components: B32-UV_-OO-F105A & B32-UV_-OO-F105B
B32-UV_-RL-F105A	2.40E-05	1.04E-03	44.11	CHECK VALVE REVERSE LEAKAGE
B32-UV_-RL-F105B	2.40E-05	1.04E-03	44.11	CHECK VALVE REVERSE LEAKAGE
B32-XHE-FO-VENT	1.76E-01	4.84E-02	1.23	Operator fails to open vent
BOPCWS-SYS-FAILS	1.00E-03	1.79E-03	2.78	BALANCE OF PLANT CHILLED WATER SYSTEM FAILS
C11-LOG-FC-CHNLA	3.60E-04	3.62E-05	1.1	LOGIC UNIT FAILS TO FUNCTION
C11-LOG-FC-CHNLB	3.60E-04	3.62E-05	1.1	LOGIC UNIT FAILS TO FUNCTION
C12-ACV-CC-SCRV126	6.90E-09	7.67E-05	1.08E+04	CCF TO OPEN OF AIR OPERATED SCRAM VALVE AOV-126
C12-ACV-OO-F012	2.00E-03	1.32E-03	1.66	AIR OPERATED VALVE F012 FAILS TO CLOSE
C12-ACV-OO-F012-F030_1_2	1.93E-04	1.03E-04	1.53	CCF of two components: C12-ACV-OO-F012 & C12-ACV-OO-F030

Table 13.7-4

Results - Internal Flooding At-Power Importance Measure Report

F-V and RAW Importance Measures Report (F-V = Fussell-Vesely Importance Measure; RAW = Risk Achievement Worth Importance Measure) Flooding At-Power Core Damage Frequency = 6.95E-09				
Event Name	**Probability**	**Fus Ves**	**RAW**	**Description**
C12-ACV-OO-F030	2.00E-03	1.32E-03	1.66	AIR OPERATED VALVE F030 FAILS TO CLOSE
C12-BV_-RE-F003B	1.21E-02	6.90E-04	1.06	MISPOSITION OF VALVE F003B
C12-BV_-RE-F013A	4.84E-02	3.23E-03	1.06	MISPOSITION OF VALVE F013A
C12-BV_-RE-F013B	4.84E-02	3.23E-03	1.06	MISPOSITION OF VALVE F013B
C12-BV_-RE-F015A	4.84E-02	3.23E-03	1.06	MISPOSITION OF VALVE F015A
C12-BV_-RE-F015B	4.84E-02	3.23E-03	1.06	MISPOSITION OF VALVE F015B
C12-BV_-RE-F018A	1.21E-02	8.03E-04	1.07	MISPOSITION OF VALVE F018A
C12-BV_-RE-F018B	1.21E-02	6.90E-04	1.06	MISPOSITION OF VALVE FO18B
C12-BV_-RE-F021A	1.21E-02	8.03E-04	1.07	MISPOSITION OF VALVE F021A
C12-BV_-RE-F021B	1.21E-02	6.90E-04	1.06	MISPOSITION OF VALVE F021B
C12-BV_-RE-F064	4.84E-02	7.32E-05	1	MISPOSITION OF OPEN VALVE F064
C12-HX_-LK-CRDA	2.40E-05	1.31E-05	1.54	CRD PUMP A OIL COOLER (LEAK OR RUPTURE)
C12-INV-FC-X_1_2	4.00E-05	3.55E-06	1.09	CCF of two components: C12-INV-FC-G1X205 & C12-INV-FC-G2X205
C12-INV-FC-X_1_2_3	7.99E-05	7.25E-06	1.09	CCF of three components: C12-INV-FC-G1X205 & C12-INV-FC-G2X205 & C12-INV-FC-G3X2
C12-INV-FC-X_1_3	4.00E-05	3.55E-06	1.09	CCF of two components: C12-INV-FC-G1X205 & C12-INV-FC-G3X205
C12-INV-FC-X_2_3	4.00E-05	3.55E-06	1.09	CCF of two components: C12-INV-FC-G2X205 & C12-INV-FC-G3X205
C12-MOV-CC-F014_1_2	2.11E-04	1.16E-04	1.55	CCF of two components: C12-MOV-CC-F014A & C12-MOV-CC-F014B
C12-MOV-CC-F014A	4.00E-03	2.13E-04	1.05	MOTOR OPER. VALVE F014A FAILS TO OPEN

Table 13.7-4

Results - Internal Flooding At-Power Importance Measure Report

F-V and RAW Importance Measures Report (F-V = Fussell-Vesely Importance Measure; RAW = Risk Achievement Worth Importance Measure) Flooding At-Power Core Damage Frequency = 6.95E-09				
Event Name	**Probability**	**Fus Ves**	**RAW**	**Description**
C12-MOV-CC-F014B	4.00E-03	2.13E-04	1.05	MOTOR OPER. VALVE F014B FAILS TO OPEN
C12-MOV-CC-F020_1_2	2.11E-04	1.16E-04	1.55	CCF of two components: C12-MOV-CC-F020A & C12-MOV-CC-F020B
C12-MOV-CC-F020A	4.00E-03	2.40E-04	1.06	MOTOR OPER. VALVE F020A FAILS TO OPEN
C12-MOV-CC-F020B	4.00E-03	2.07E-04	1.05	MOTOR OPER. VALVE F020B FAILS TO OPEN
C12-MOV-CC-F023	4.00E-03	2.73E-03	1.68	MOTOR OPERATED VALVE F023 FAILS TO OPEN
C12-MOV-CC-F070_1_2	2.11E-04	7.73E-05	1.37	CCF of two components: C12-MOV-CC-F070A & C12-MOV-CC-F070B
C12-MOV-CC-F070A	4.00E-03	4.98E-06	1	F070A FAILS TO OPEN
C12-MOV-CC-F070B	4.00E-03	4.98E-06	1	F070B FAILS TO OPEN
C12-MOV-CO-F024	1.20E-05	4.57E-06	1.38	MOTOR OPERATED VALVE F024 FAILS TO REMAIN CLOSED
C12-MOV-CO-F062A	1.20E-05	4.57E-06	1.38	MOTOR OPERATED VALVE F062A FAILS TO REMAIN CLOSE
C12-MOV-CO-F062B	1.20E-05	4.57E-06	1.38	MOTOR OPERATED VALVE F062B FAILS TO REMAIN CLOSED
C12-MOV-OC-F023	3.36E-06	1.02E-06	1.3	MOTOR OPERATED VALVE F023 FAILS TO REMAIN OPEN
C12-MOV-OO-F024	4.00E-03	2.73E-03	1.68	MOTOR OPERATED VALVE F024 FAILS TO CLOSE
C12-MOV-OO-F062A	4.00E-03	2.73E-03	1.68	MOTOR OPERATED VALVE F062A FAILS TO CLOSE
C12-MOV-OO-F062B	4.00E-03	2.73E-03	1.68	MOTOR OPERATED VALVE F062B FAILS TO CLOSE
C12-MP_-FR-C001_1_2	3.96E-05	1.83E-05	1.46	CCF of two components: C12-MP_-FR-C001A & C12-MP_-FR-C001B
C12-MP_-FR-C001A	6.00E-04	2.37E-05	1.04	MOTOR-DRIVEN PUMP C001A FAILS TO RUN
C12-MP_-FR-C001AOIL	6.00E-04	2.37E-05	1.04	MOTOR-DRIVEN AUX. OIL PUMP FOR C001A FAILS TO RUN
C12-MP_-FR-C001B	6.00E-04	2.08E-05	1.03	MOTOR-DRIVEN PUMP C001B FAILS TO RUN

Table 13.7-4

Results - Internal Flooding At-Power Importance Measure Report

F-V and RAW Importance Measures Report (F-V = Fussell-Vesely Importance Measure; RAW = Risk Achievement Worth Importance Measure) Flooding At-Power Core Damage Frequency = 6.95E-09				
Event Name	**Probability**	**Fus Ves**	**RAW**	**Description**
C12-MP_-FR-C001BOIL	6.00E-04	2.08E-05	1.03	MOTOR-DRIVEN AUX. OIL PUMP FOR C001B FAILS TO RUN
C12-MP_-FR-C001OIL_1_2	1.41E-05	5.37E-06	1.38	CCF of two components: C12-MP_-FR-C001AOIL & C12-MP_-FR-C001BOIL
C12-MP_-FS-C001B	2.00E-03	8.28E-05	1.04	MOTOR-DRIVEN PUMP C001B FAILS TO START
C12-MP_-FS-C001BOIL	2.00E-03	8.28E-05	1.04	MOTOR-DRIVEN AUX. OIL PUMP FOR C001B FAILS TO START
C12-ROD-CF-SCRAM	2.50E-07	2.63E-01	1.05E+06	CCF OF CONTROL RODS TO INSERT
C12-SOV-FD-SCRV139	1.70E-06	4.96E-03	2.92E+03	CCF TO OPEN (VENT) 0F SCRAM PILOT SOLENOID VALVES SOV-139
C12-SYS-TM-TRAINB	3.00E-03	1.45E-04	1.05	TRAIN B IN MAINTENANCE
C12-UV_-CC-F019_1_2	2.99E-06	8.94E-07	1.3	CCF of two components: C12-UV_-CC-F019A & C12-UV_-CC-F019B
C12-UV_-CC-F022	1.00E-04	5.02E-05	1.5	CHECK VALVE F022 FAILS TO OPEN
C12-UV_-OC-F022	4.80E-06	1.53E-06	1.31	CHECK VALVE F022 FAILS TO REMAIN OPEN
C12-XHE-FO-LEVEL2	3.21E-02	5.88E-06	1	Operator fails to back-up CRD actuation
C41-ACV-OC-F002A	3.72E-04	7.23E-04	2.94	AIR OPERATED VALVE F002A FAILS TO REMAIN OPEN
C41-ACV-OC-F002B	3.72E-04	7.23E-04	2.94	AIR OPERATED VALVE F002B FAILS TO REMAIN OPEN
C41-ACV-OC-F002C	3.72E-04	7.23E-04	2.94	AIR OPERATED VALVE F002C FAILS TO REMAIN OPEN
C41-ACV-OC-F002D	3.72E-04	7.23E-04	2.94	AIR OPERATED VALVE F002D FAILS TO REMAIN OPEN
C41-BV_-OC-F001A	2.63E-04	5.09E-04	2.94	MAINTENANCE VALVE F001A PLUGS/TRANSFERS CLOSED
C41-BV_-OC-F001B	2.63E-04	5.09E-04	2.94	MAINTENANCE VALVE F001B PLUGS/TRANSFERS CLOSED
C41-BV_-OC-F006A	2.63E-04	5.09E-04	2.94	MAINTENANCE VALVE F006A PLUGS/TRANSFERS CLOSED

Table 13.7-4

Results - Internal Flooding At-Power Importance Measure Report

F-V and RAW Importance Measures Report (F-V = Fussell-Vesely Importance Measure; RAW = Risk Achievement Worth Importance Measure) Flooding At-Power Core Damage Frequency = 6.95E-09				
Event Name	**Probability**	**Fus Ves**	**RAW**	**Description**
C41-BV_-OC-F006B	2.63E-04	5.09E-04	2.94	MAINTENANCE VALVE F006B PLUGS/TRANSFERS CLOSED
C41-SQV-CC_1_2_3	5.56E-06	8.43E-06	2.5	CCF of three components: C41-SQV-CC-F003A & C41-SQV-CC-F003B & C41-SQV-CC-F003C
C41-SQV-CC_1_2_4	5.56E-06	8.43E-06	2.5	CCF of three components: C41-SQV-CC-F003A & C41-SQV-CC-F003B & C41-SQV-CC-F003D
C41-SQV-CC_1_3	5.56E-05	1.06E-04	2.9	CCF of two components: C41-SQV-CC-F003A & C41-SQV-CC-F003C
C41-SQV-CC_1_3_4	5.56E-06	8.43E-06	2.5	CCF of three components: C41-SQV-CC-F003A & C41-SQV-CC-F003C & C41-SQV-CC-F003D
C41-SQV-CC_2_3_4	5.56E-06	8.43E-06	2.5	CCF of three components: C41-SQV-CC-F003B & C41-SQV-CC-F003C & C41-SQV-CC-F003D
C41-SQV-CC_2_4	5.56E-05	1.06E-04	2.9	CCF of two components: C41-SQV-CC-F003B & C41-SQV-CC-F003D
C41-SQV-CC_ALL	1.50E-04	2.90E-04	2.93	CCF of all components in group 'C41-SQV-CC'
C41-SQV-CC-F003A	3.00E-03	1.54E-05	1.01	SQUIB VALVE F003A FAILS TO OPERATE
C41-SQV-CC-F003B	3.00E-03	1.54E-05	1.01	SQUIB VALVE F003B FAILS TO OPERATE
C41-SQV-CC-F003C	3.00E-03	1.54E-05	1.01	SQUIB VALVE F003C FAILS TO OPERATE
C41-SQV-CC-F003D	3.00E-03	1.54E-05	1.01	SQUIB VALVE F003D FAILS TO OPERATE
C41-TNK-RP-A001A	2.40E-06	2.91E-06	2.2	ACCUMULATOR A001A FAILS CATASTROPHICALLY
C41-TNK-RP-A001B	2.40E-06	2.91E-06	2.2	ACCUMULATOR A001B FAILS CATASTROPHICALLY
C41-UV_-CC_1_2_3	2.26E-06	2.81E-06	2.2	CCF of three components: C41-UV_-CC-F004A & C41-UV_-CC-F004B & C41-UV_-CC-F005A

Table 13.7-4

Results - Internal Flooding At-Power Importance Measure Report

F-V and RAW Importance Measures Report (F-V = Fussell-Vesely Importance Measure; RAW = Risk Achievement Worth Importance Measure) Flooding At-Power Core Damage Frequency = 6.95E-09				
Event Name	**Probability**	**Fus Ves**	**RAW**	**Description**
C41-UV_-CC_1_2_4	2.26E-06	2.81E-06	2.2	CCF of three components: C41-UV_-CC-F004A & C41-UV_-CC-F004B & C41-UV_-CC-F005B
C41-UV_-CC_1_3_4	2.26E-06	2.81E-06	2.2	CCF of three components: C41-UV_-CC-F004A & C41-UV_-CC-F005A & C41-UV_-CC-F005B
C41-UV_-CC_2_3_4	2.26E-06	2.81E-06	2.2	CCF of three components: C41-UV_-CC-F004B & C41-UV_-CC-F005A & C41-UV_-CC-F005B
C41-UV_-CC_ALL	1.37E-05	2.44E-05	2.75	CCF of all components in group 'C41-UV_-CC'
C41-UV_-CC-F004A	8.00E-04	1.55E-03	2.94	CHECK VALVE F004A FAILS TO OPEN
C41-UV_-CC-F004B	8.00E-04	1.55E-03	2.94	CHECK VALVE F004B FAILS TO OPEN
C41-UV_-CC-F005A	8.00E-04	1.55E-03	2.94	CHECK VALVE F005A FAILS TO OPEN
C41-UV_-CC-F005B	8.00E-04	1.55E-03	2.94	CHECK VALVE F005B FAILS TO OPEN
C51-CCFSOFTWARE	1.00E-04	2.08E-04	3.07	NMS COMMON CAUSE SOFTWARE FAILURE
C62-CCFSOFTWARE	1.00E-04	3.19E-03	32.84	N-DCIS COMMON CAUSE SOFTWARE FAILURE
C62-CCFSOFTWARE_S	1.00E-04	3.19E-03	32.84	N-DCIS SPURIOUS COMMON CAUSE SOFTWARE FAILURE
C62-DTM-FC-CFS	6.00E-04	1.05E-03	2.74	CFS MASTER DTM
C62-DTM-FC-PIPA	6.00E-04	2.85E-05	1.05	PIP A MASTER DTM
C62-DTM-FC-PIPB	6.00E-04	7.38E-06	1.01	PIP B MASTER DTM
C62-DTM-FC-PIPMP_1_2	6.67E-05	2.09E-03	32.26	CCF of two components: C62-DTM-FC-PIPA & C62-DTM-FC-PIPB
C62-LDD-FC-LOADS	1.86E-06	4.36E-05	24.2	COMMON CAUSE FAILURE OF REMAINING NDCIS LOAD DRIVERS
C62-LOG-FC-CFSMP_1_2	1.00E-05	6.52E-06	1.65	CCF of two components: C62-LOG-FC-CFS1 & C62-LOG-FC-CFS2

Table 13.7-4

Results - Internal Flooding At-Power Importance Measure Report

F-V and RAW Importance Measures Report

(F-V = Fussell-Vesely Importance Measure; RAW = Risk Achievement Worth Importance Measure)

Flooding At-Power

Core Damage Frequency = 6.95E-09

Event Name	Probability	Fus Ves	RAW	Description
C62-LOG-FC-CFSMP_1_2_3	2.00E-06	6.39E-07	1.32	CCF of three components: C62-LOG-FC-CFS1 & C62-LOG-FC-CFS2 & C62-LOG-FC-CFS3
C62-LOG-FC-CFSMP_1_3	1.00E-05	6.52E-06	1.65	CCF of two components: C62-LOG-FC-CFS1 & C62-LOG-FC-CFS3
C62-LOG-FC-CFSMP_2_3	1.00E-05	6.52E-06	1.65	CCF of two components: C62-LOG-FC-CFS2 & C62-LOG-FC-CFS3
C62-LOG-FC-PIPMP_1_2	6.66E-06	3.03E-06	1.45	CCF of two components: C62-LOG-FC-PIPA1 & C62-LOG-FC-PIPA2
C62-LOG-FC-PIPMP_3_4	6.66E-06	2.72E-06	1.4	CCF of two components: C62-LOG-FC-PIPB1 & C62-LOG-FC-PIPB2
C62-LOG-FC-PIPMP_ALL	1.80E-05	5.25E-04	30.1	CCF of all components in group 'C62-LOG-FC-PIPMP'
C62-LT_-NO-DPSPX_ALL	3.60E-06	7.67E-07	1.2	CCF of all components in group 'C62-LT_-NO-DPSPX'
C62-LT_-NO-NDCRX_1_2_3	1.91E-08	7.67E-07	41.25	CCF of three components: C62-LT_-NO-RXLVLA & C62-LT_-NO-RXLVLB & C62-LT_-NO-RXLV
C62-LT_-NO-NDCRX_1_2_4	1.91E-08	7.67E-07	41.25	CCF of three components: C62-LT_-NO-RXLVLA & C62-LT_-NO-RXLVLB & C62-LT_-NO-RXLV
C62-LT_-NO-NDCRX_1_3_4	1.91E-08	7.67E-07	41.25	CCF of three components: C62-LT_-NO-RXLVLA & C62-LT_-NO-RXLVLC & C62-LT_-NO-RXLV
C62-LT_-NO-NDCRX_2_3_4	1.91E-08	7.67E-07	41.25	CCF of three components: C62-LT_-NO-RXLVLB & C62-LT_-NO-RXLVLC & C62-LT_-NO-RXLV
C62-LT_-NO-NDCRX_ALL	3.60E-06	4.68E-04	130.6	CCF of all components in group 'C62-LT_-NO-NDCRX'
C62-PSP-FO-DPSEP_1_5_6	4.00E-09	5.11E-07	128.78	CCF of three components: C62-PSP-FO-DPSAPSA & C72-PSP-FO-DPSCNTPSA & C72-PSP-FO-
C62-PSP-FO-DPSEP_2_5_6	4.00E-09	5.11E-07	128.78	CCF of three components: C62-PSP-FO-DPSAPSB & C72-PSP-FO-DPSCNTPSA & C72-PSP-FO-

Table 13.7-4

Results - Internal Flooding At-Power Importance Measure Report

F-V and RAW Importance Measures Report (F-V = Fussell-Vesely Importance Measure; RAW = Risk Achievement Worth Importance Measure) Flooding At-Power Core Damage Frequency = 6.95E-09				
Event Name	**Probability**	**Fus Ves**	**RAW**	**Description**
C62-PSP-FO-DPSEP_3_5_6	4.00E-09	5.11E-07	128.78	CCF of three components: C62-PSP-FO-DPSBPSA & C72-PSP-FO-DPSCNTPSA & C72-PSP-FO-
C62-PSP-FO-DPSEP_4_5_6	4.00E-09	5.11E-07	128.78	CCF of three components: C62-PSP-FO-DPSBPSB & C72-PSP-FO-DPSCNTPSA & C72-PSP-FO-
C62-PSP-FO-DPSEP_5_6	8.00E-08	2.31E-05	286.71	CCF of two components: C72-PSP-FO-DPSCNTPSA & C72-PSP-FO-DPSCNTPSB
C62-PSP-FO-DPSEP_ALL	3.60E-07	1.19E-04	330.21	CCF of all components in group 'C62-PSP-FO-DPSEP'
C62-PSP-FO-PIPEP_ALL	3.60E-07	6.23E-06	17.95	CCF of all components in group 'C62-PSP-FO-PIPEP'
C62-PT_-NO-CFSTC_1_2	3.84E-06	1.28E-06	1.32	CCF of two components: C62-PT_-NO-TCCPPRSA & C62-PT_-NO-TCCPPRSB
C62-PT_-NO-DPSRX_ALL	1.73E-06	7.67E-07	1.44	CCF of all components in group 'C62-PT_-NO-DPSRX'
C62-PT_-NO-PIPRC_ALL	1.73E-06	5.11E-07	1.28	CCF of all components in group 'C62-PT_-NO-PIPRC'
C62-PT_-NO-PIPSA_ALL	1.73E-06	1.09E-06	1.62	CCF of all components in group 'C62-PT_-NO-PIPSA'
C62-TT_-NO-NDCRX_1_2_3	4.67E-08	2.14E-06	46.88	CCF of three components: C62-TT_-NO-TEMPA & C62-TT_-NO-TEMPB & C62-TT_-NO-TEMPC
C62-TT_-NO-NDCRX_1_2_4	4.67E-08	2.14E-06	46.88	CCF of three components: C62-TT_-NO-TEMPA & C62-TT_-NO-TEMPB & C62-TT_-NO-TEMPD
C62-TT_-NO-NDCRX_1_3_4	4.67E-08	2.14E-06	46.88	CCF of three components: C62-TT_-NO-TEMPA & C62-TT_-NO-TEMPC & C62-TT_-NO-TEMPD
C62-TT_-NO-NDCRX_2_3_4	4.67E-08	2.14E-06	46.88	CCF of three components: C62-TT_-NO-TEMPB & C62-TT_-NO-TEMPC & C62-TT_-NO-TEMPD
C62-TT_-NO-NDCRX_ALL	1.26E-06	1.51E-04	120.27	CCF of all components in group 'C62-TT_-NO-NDCRX'
C62-TT_-NO-PIPRC_ALL	1.26E-06	3.83E-07	1.28	CCF of all components in group 'C62-TT_-NO-PIPRC'

Table 13.7-4

Results - Internal Flooding At-Power Importance Measure Report

F-V and RAW Importance Measures Report

(F-V = Fussell-Vesely Importance Measure; RAW = Risk Achievement Worth Importance Measure)

Flooding At-Power

Core Damage Frequency = 6.95E-09

Event Name	Probability	Fus Ves	RAW	Description
C63-ATM-FC-IPR_ALL	5.00E-06	1.53E-06	1.31	CCF of all components in group 'C63-ATM-FC-IPR'
C63-CCFSOFTWARE	1.00E-04	8.95E-02	894.29	Common cause failure of software
C63-CCFSOFTWARE_S	1.00E-04	3.88E-01	3.88E+03	ESF SPURIOUS COMMON CAUSE SOFTWARE FAILURE
C63-DTM-FC-ESFD1	6.00E-04	2.68E-06	1	ESF DIV 1 MASTER DTM
C63-DTM-FC-ESFD2	6.00E-04	2.68E-06	1	ESF DIV 2 MASTER DTM
C63-DTM-FC-ESFD3	6.00E-04	2.68E-06	1	ESF DIV 3 MASTER DTM
C63-DTM-FC-ESFD4	6.00E-04	2.68E-06	1	ESF DIV 4 MASTER DTM
C63-DTM-FC-ESFLG_1_2	1.11E-05	1.79E-06	1.16	CCF of two components: C63-DTM-FC-ESFD1 & C63-DTM-FC-ESFD2
C63-DTM-FC-ESFLG_1_2_3	1.11E-06	4.07E-04	365.66	CCF of three components: C63-DTM-FC-ESFD1 & C63-DTM-FC-ESFD2 & C63-DTM-FC-ESFD3
C63-DTM-FC-ESFLG_1_2_4	1.11E-06	4.07E-04	365.66	CCF of three components: C63-DTM-FC-ESFD1 & C63-DTM-FC-ESFD2 & C63-DTM-FC-ESFD4
C63-DTM-FC-ESFLG_1_3	1.11E-05	1.79E-06	1.16	CCF of two components: C63-DTM-FC-ESFD1 & C63-DTM-FC-ESFD3
C63-DTM-FC-ESFLG_1_3_4	1.11E-06	4.07E-04	365.66	CCF of three components: C63-DTM-FC-ESFD1 & C63-DTM-FC-ESFD3 & C63-DTM-FC-ESFD4
C63-DTM-FC-ESFLG_1_4	1.11E-05	1.79E-06	1.16	CCF of two components: C63-DTM-FC-ESFD1 & C63-DTM-FC-ESFD4
C63-DTM-FC-ESFLG_2_3	1.11E-05	1.79E-06	1.16	CCF of two components: C63-DTM-FC-ESFD2 & C63-DTM-FC-ESFD3
C63-DTM-FC-ESFLG_2_3_4	1.11E-06	4.07E-04	365.66	CCF of three components: C63-DTM-FC-ESFD2 & C63-DTM-FC-ESFD3 & C63-DTM-FC-ESFD4

Table 13.7-4

Results - Internal Flooding At-Power Importance Measure Report

F-V and RAW Importance Measures Report (F-V = Fussell-Vesely Importance Measure; RAW = Risk Achievement Worth Importance Measure) Flooding At-Power Core Damage Frequency = 6.95E-09				
Event Name	**Probability**	**Fus Ves**	**RAW**	**Description**
C63-DTM-FC-ESFLG_2_4	1.11E-05	1.79E-06	1.16	CCF of two components: C63-DTM-FC-ESFD2 & C63-DTM-FC-ESFD4
C63-DTM-FC-ESFLG_3_4	1.11E-05	1.79E-06	1.16	CCF of two components: C63-DTM-FC-ESFD3 & C63-DTM-FC-ESFD4
C63-DTM-FC-ESFLG_ALL	3.00E-05	1.23E-02	411.5	CCF of all components in group 'C63-DTM-FC-ESFLG'
C63-LDD-FC-ESFLOADS	1.86E-06	1.45E-03	779.1	CCF OF ALL ESF LOAD DRIVERS
C63-LDD-FC-S1B32F012A-A	1.09E-03	2.53E-05	1.02	LOAD DRIVER FAILS DURING OPERATION
C63-LDD-FC-S1B32F012B-B	1.09E-03	2.53E-05	1.02	LOAD DRIVER FAILS DURING OPERATION
C63-LDD-FC-S1B32F012C-C	1.09E-03	2.53E-05	1.02	LOAD DRIVER FAILS DURING OPERATION
C63-LDD-FC-S1B32F012D-D	1.09E-03	2.53E-05	1.02	LOAD DRIVER FAILS DURING OPERATION
C63-LDD-FC-S2B32F012A-A	1.09E-03	2.53E-05	1.02	LOAD DRIVER FAILS DURING OPERATION
C63-LDD-FC-S2B32F012B-B	1.09E-03	2.53E-05	1.02	LOAD DRIVER FAILS DURING OPERATION
C63-LDD-FC-S2B32F012C-C	1.09E-03	2.53E-05	1.02	LOAD DRIVER FAILS DURING OPERATION
C63-LDD-FC-S2B32F012D-D	1.09E-03	2.53E-05	1.02	LOAD DRIVER FAILS DURING OPERATION
C63-LOG-FC-ESFLG_ALL	1.80E-05	1.54E-02	855.87	CCF of all components in group 'C63-LOG-FC-ESFLG'
C63-LOG-FC-IPRLG_ALL	1.80E-05	5.62E-06	1.31	CCF of all components in group 'C63-LOG-FC-IPRLG'
C63-LT_-NO-ATWRX_ALL	3.60E-06	5.18E-06	2.4	CCF of all components in group 'C63-LT_-NO-ATWRX'
C63-LT_-NO-ESFPX_ALL	3.60E-06	2.24E-06	1.58	CCF of all components in group 'C63-LT_-NO-ESFPX'
C63-LT_-NO-ESFRX_1_2_3	1.91E-08	3.39E-06	177.07	CCF of three components: C63-LT_-NO-ESFRXLVLA & C63-LT_-NO-ESFRXLVLB & C63-LT_-N
C63-LT_-NO-ESFRX_1_2_4	1.91E-08	3.39E-06	177.07	CCF of three components: C63-LT_-NO-ESFRXLVLA & C63-LT_-NO-ESFRXLVLB & C63-LT_-N

Table 13.7-4

Results - Internal Flooding At-Power Importance Measure Report

F-V and RAW Importance Measures Report (F-V = Fussell-Vesely Importance Measure; RAW = Risk Achievement Worth Importance Measure) Flooding At-Power Core Damage Frequency = 6.95E-09				
Event Name	**Probability**	**Fus Ves**	**RAW**	**Description**
C63-LT_-NO-ESFRX_1_3_4	1.91E-08	3.39E-06	177.07	CCF of three components: C63-LT_-NO-ESFRXLVLA & C63-LT_-NO-ESFRXLVLC & C63-LT_-N
C63-LT_-NO-ESFRX_2_3_4	1.91E-08	3.39E-06	177.07	CCF of three components: C63-LT_-NO-ESFRXLVLB & C63-LT_-NO-ESFRXLVLC & C63-LT_-N
C63-LT_-NO-ESFRX_ALL	3.60E-06	1.26E-03	351.23	CCF of all components in group 'C63-LT_-NO-ESFRX'
C63-LT_-NO-IPRRX_ALL	3.60E-06	1.15E-06	1.3	CCF of all components in group 'C63-LT_-NO-IPRRX'
C63-LT_-NO-RPSRX_1_2_3	1.33E-07	1.17E-05	88.23	CCF of three components: C63-LT_-NO-RPSRXLVLA & C63-LT_-NO-RPSRXLVLB & C63-LT_-N
C63-LT_-NO-RPSRX_1_2_4	1.33E-07	1.17E-05	88.23	CCF of three components: C63-LT_-NO-RPSRXLVLA & C63-LT_-NO-RPSRXLVLB & C63-LT_-N
C63-LT_-NO-RPSRX_1_3_4	1.33E-07	1.17E-05	88.23	CCF of three components: C63-LT_-NO-RPSRXLVLA & C63-LT_-NO-RPSRXLVLC & C63-LT_-N
C63-LT_-NO-RPSRX_2_3_4	1.33E-07	1.17E-05	88.23	CCF of three components: C63-LT_-NO-RPSRXLVLB & C63-LT_-NO-RPSRXLVLC & C63-LT_-N
C63-LT_-NO-RPSRX_ALL	3.60E-06	3.61E-04	101.23	CCF of all components in group 'C63-LT_-NO-RPSRX'
C63-PSP-FO-ESFEP_ALL	3.60E-07	6.17E-05	170.35	CCF of all components in group 'C63-PSP-FO-ESFEP'
C63-PT_-NO-ATWRX_ALL	1.73E-06	1.92E-06	2.07	CCF of all components in group 'C63-PT_-NO-ATWRX'
C63-PT_-NO-ESFRX_1_2_3	6.40E-08	1.15E-06	17.48	CCF of three components: C63-PT_-NO-ESFRXPRSA & C63-PT_-NO-ESFRXPRSB & C63-PT_-N
C63-PT_-NO-ESFRX_1_2_4	6.40E-08	1.15E-06	17.48	CCF of three components: C63-PT_-NO-ESFRXPRSA & C63-PT_-NO-ESFRXPRSB & C63-PT_-N

Table 13.7-4

Results - Internal Flooding At-Power Importance Measure Report

F-V and RAW Importance Measures Report (F-V = Fussell-Vesely Importance Measure; RAW = Risk Achievement Worth Importance Measure) Flooding At-Power Core Damage Frequency = 6.95E-09				
Event Name	**Probability**	**Fus Ves**	**RAW**	**Description**
C63-PT_-NO-ESFRX_1_3_4	6.40E-08	1.15E-06	17.48	CCF of three components: C63-PT_-NO-ESFRXPRSA & C63-PT_-NO-ESFRXPRSC & C63-PT_-N
C63-PT_-NO-ESFRX_2_3_4	6.40E-08	1.15E-06	17.48	CCF of three components: C63-PT_-NO-ESFRXPRSB & C63-PT_-NO-ESFRXPRSC & C63-PT_-N
C63-PT_-NO-ESFRX_ALL	1.73E-06	5.42E-05	32.04	CCF of all components in group 'C63-PT_-NO-ESFRX'
C71-ACT-FC_ALL	5.76E-07	1.60E-07	1.25	CCF of all components in group 'C71-ACT-FC'
C71-ACT-FC-S_ALL	5.76E-07	1.60E-07	1.25	CCF of all components in group 'C71-ACT-FC-S'
C71-CCFSOFTWARE	1.00E-04	1.01E-02	102.13	RPS COMMON CAUSE SOFTWARE FAILURE
C71-DTM-FC-R_1_2	1.11E-05	9.58E-07	1.08	CCF of two components: C71-DTM-FC-RPSDIV1 & C71-DTM-FC-RPSDIV2
C71-DTM-FC-R_1_2_3	1.11E-06	1.10E-04	99.74	CCF of three components: C71-DTM-FC-RPSDIV1 & C71-DTM-FC-RPSDIV2 & C71-DTM-FC-RP
C71-DTM-FC-R_1_2_4	1.11E-06	1.10E-04	99.74	CCF of three components: C71-DTM-FC-RPSDIV1 & C71-DTM-FC-RPSDIV2 & C71-DTM-FC-RP
C71-DTM-FC-R_1_3	1.11E-05	9.58E-07	1.08	CCF of two components: C71-DTM-FC-RPSDIV1 & C71-DTM-FC-RPSDIV3
C71-DTM-FC-R_1_3_4	1.11E-06	1.10E-04	99.74	CCF of three components: C71-DTM-FC-RPSDIV1 & C71-DTM-FC-RPSDIV3 & C71-DTM-FC-RP
C71-DTM-FC-R_1_4	1.11E-05	9.58E-07	1.08	CCF of two components: C71-DTM-FC-RPSDIV1 & C71-DTM-FC-RPSDIV4
C71-DTM-FC-R_2_3	1.11E-05	9.58E-07	1.08	CCF of two components: C71-DTM-FC-RPSDIV2 & C71-DTM-FC-RPSDIV3
C71-DTM-FC-R_2_3_4	1.11E-06	1.10E-04	99.74	CCF of three components: C71-DTM-FC-RPSDIV2 & C71-DTM-FC-RPSDIV3 & C71-DTM-FC-RP
C71-DTM-FC-R_2_4	1.11E-05	9.58E-07	1.08	CCF of two components: C71-DTM-FC-RPSDIV2 & C71-DTM-FC-RPSDIV4

Table 13.7-4

Results - Internal Flooding At-Power Importance Measure Report

F-V and RAW Importance Measures Report

(F-V = Fussell-Vesely Importance Measure; RAW = Risk Achievement Worth Importance Measure)

Flooding At-Power

Core Damage Frequency = 6.95E-09

Event Name	Probability	Fus Ves	RAW	Description
C71-DTM-FC-R_3_4	1.11E-05	9.58E-07	1.08	CCF of two components: C71-DTM-FC-RPSDIV3 & C71-DTM-FC-RPSDIV4
C71-DTM-FC-R_ALL	3.00E-05	3.03E-03	101.98	CCF of all components in group 'C71-DTM-FC-R'
C71-DTM-FC-RPSDIV1	6.00E-04	1.44E-06	1	DIGITAL TRIP MODULE FAILS TO FUNCTION
C71-DTM-FC-RPSDIV2	6.00E-04	1.44E-06	1	DIGITAL TRIP MODULE FAILS TO FUNCTION
C71-DTM-FC-RPSDIV3	6.00E-04	1.44E-06	1	DIGITAL TRIP MODULE FAILS TO FUNCTION
C71-DTM-FC-RPSDIV4	6.00E-04	1.44E-06	1	DIGITAL TRIP MODULE FAILS TO FUNCTION
C71-LDD-FC-2OF4G	1.86E-06	2.72E-06	2.44	CCF LOAD DRIVER (2 or more of 4 GROUPS)
C71-OLU-FC-R_5_6_7	9.52E-08	8.15E-06	86.06	CCF of three components: C71-OLU-FC-RPSDIV1 & C71-OLU-FC-RPSDIV2 & C71-OLU-FC-RP
C71-OLU-FC-R_5_6_8	9.52E-08	8.15E-06	86.06	CCF of three components: C71-OLU-FC-RPSDIV1 & C71-OLU-FC-RPSDIV2 & C71-OLU-FC-RP
C71-OLU-FC-R_5_7_8	9.52E-08	8.15E-06	86.06	CCF of three components: C71-OLU-FC-RPSDIV1 & C71-OLU-FC-RPSDIV3 & C71-OLU-FC-RP
C71-OLU-FC-R_6_7_8	9.52E-08	8.15E-06	86.06	CCF of three components: C71-OLU-FC-RPSDIV2 & C71-OLU-FC-RPSDIV3 & C71-OLU-FC-RP
C71-OLU-FC-R_ALL	1.80E-05	1.82E-03	101.91	CCF of all components in group 'C71-OLU-FC-R'
C71-SLU-FC-N_1_2_3	1.67E-06	1.85E-06	2.06	CCF of three components: C71-SLU-FC-NMSDIV1 & C71-SLU-FC-NMSDIV2 & C71-SLU-FC-NM
C71-SLU-FC-N_1_2_4	1.67E-06	1.85E-06	2.06	CCF of three components: C71-SLU-FC-NMSDIV1 & C71-SLU-FC-NMSDIV2 & C71-SLU-FC-NM

Table 13.7-4

Results - Internal Flooding At-Power Importance Measure Report

F-V and RAW Importance Measures Report (F-V = Fussell-Vesely Importance Measure; RAW = Risk Achievement Worth Importance Measure) Flooding At-Power Core Damage Frequency = 6.95E-09				
Event Name	**Probability**	**Fus Ves**	**RAW**	**Description**
C71-SLU-FC-N_1_3_4	1.67E-06	1.85E-06	2.06	CCF of three components: C71-SLU-FC-NMSDIV1 & C71-SLU-FC-NMSDIV3 & C71-SLU-FC-NM
C71-SLU-FC-N_2_3_4	1.67E-06	1.85E-06	2.06	CCF of three components: C71-SLU-FC-NMSDIV2 & C71-SLU-FC-NMSDIV3 & C71-SLU-FC-NM
C71-SLU-FC-N_ALL	4.50E-05	9.16E-05	3.02	CCF of all components in group 'C71-SLU-FC-N'
C71-SLU-FC-R_1_2	1.67E-05	2.11E-06	1.12	CCF of two components: C71-SLU-FC-RPSDIV1 & C71-SLU-FC-RPSDIV2
C71-SLU-FC-R_1_2_3	1.67E-06	1.66E-04	100.63	CCF of three components: C71-SLU-FC-RPSDIV1 & C71-SLU-FC-RPSDIV2 & C71-SLU-FC-RP
C71-SLU-FC-R_1_2_4	1.67E-06	1.66E-04	100.63	CCF of three components: C71-SLU-FC-RPSDIV1 & C71-SLU-FC-RPSDIV2 & C71-SLU-FC-RP
C71-SLU-FC-R_1_3	1.67E-05	2.11E-06	1.12	CCF of two components: C71-SLU-FC-RPSDIV1 & C71-SLU-FC-RPSDIV3
C71-SLU-FC-R_1_3_4	1.67E-06	1.66E-04	100.63	CCF of three components: C71-SLU-FC-RPSDIV1 & C71-SLU-FC-RPSDIV3 & C71-SLU-FC-RP
C71-SLU-FC-R_1_4	1.67E-05	2.11E-06	1.12	CCF of two components: C71-SLU-FC-RPSDIV1 & C71-SLU-FC-RPSDIV4
C71-SLU-FC-R_2_3	1.67E-05	2.11E-06	1.12	CCF of two components: C71-SLU-FC-RPSDIV2 & C71-SLU-FC-RPSDIV3
C71-SLU-FC-R_2_3_4	1.67E-06	1.66E-04	100.63	CCF of three components: C71-SLU-FC-RPSDIV2 & C71-SLU-FC-RPSDIV3 & C71-SLU-FC-RP
C71-SLU-FC-R_2_4	1.67E-05	2.11E-06	1.12	CCF of two components: C71-SLU-FC-RPSDIV2 & C71-SLU-FC-RPSDIV4
C71-SLU-FC-R_3_4	1.67E-05	2.11E-06	1.12	CCF of two components: C71-SLU-FC-RPSDIV3 & C71-SLU-FC-RPSDIV4
C71-SLU-FC-R_ALL	4.50E-05	4.55E-03	102.01	CCF of all components in group 'C71-SLU-FC-R'
C71-SLU-FC-RPSDIV1	9.00E-04	3.16E-06	1	RPS DIV I TLU FAILS

Table 13.7-4

Results - Internal Flooding At-Power Importance Measure Report

F-V and RAW Importance Measures Report (F-V = Fussell-Vesely Importance Measure; RAW = Risk Achievement Worth Importance Measure) Flooding At-Power Core Damage Frequency = 6.95E-09				
Event Name	**Probability**	**Fus Ves**	**RAW**	**Description**
C71-SLU-FC-RPSDIV2	9.00E-04	3.16E-06	1	RPS DIV II TLU FAILS
C71-SLU-FC-RPSDIV3	9.00E-04	3.16E-06	1	RPS DIV III TLU FAILS
C71-SLU-FC-RPSDIV4	9.00E-04	3.16E-06	1	RPS DIV IV TLU FAILS
C71-SLU-FC-S_1_2_3	1.67E-06	1.85E-06	2.06	CCF of three components: C71-SLU-FC-SRNDIV1 & C71-SLU-FC-SRNDIV2 & C71-SLU-FC-SR
C71-SLU-FC-S_1_2_4	1.67E-06	1.85E-06	2.06	CCF of three components: C71-SLU-FC-SRNDIV1 & C71-SLU-FC-SRNDIV2 & C71-SLU-FC-SR
C71-SLU-FC-S_1_3_4	1.67E-06	1.85E-06	2.06	CCF of three components: C71-SLU-FC-SRNDIV1 & C71-SLU-FC-SRNDIV3 & C71-SLU-FC-SR
C71-SLU-FC-S_2_3_4	1.67E-06	1.85E-06	2.06	CCF of three components: C71-SLU-FC-SRNDIV2 & C71-SLU-FC-SRNDIV3 & C71-SLU-FC-SR
C71-SLU-FC-S_ALL	4.50E-05	8.77E-05	2.93	CCF of all components in group 'C71-SLU-FC-S'
C71-XHE-FO-SCRAM	1.00E-01	2.23E-02	1.2	OPERATOR FAILS TO PERFORM MANUAL SCRAM
C72-CCFSOFTWARE	1.00E-04	3.87E-02	387.99	COMMON CAUSE FAILURE OF DPS PROCESSORS
C72-LDD-FC-FWRB1X	1.09E-03	4.34E-06	1	DPS OUTPUT SWITCH 1 TO FWC FAILS
C72-LDD-FC-FWRB1Y	1.09E-03	4.34E-06	1	FEEDWATER RUNBACK INPUT SWITCH 1 FAILS
C72-LDD-FC-FWRB2X	1.09E-03	4.34E-06	1	DPS OUTPUT SWITCH 2 TO FWC FAILS
C72-LDD-FC-FWRB2Y	1.09E-03	4.34E-06	1	FEEDWATER RUNBACK INPUT SWITCH 2 FAILS
C72-LDD-FC-FWRB3X	1.09E-03	4.34E-06	1	DPS OUTPUT SWITCH 3 TO FWC FAILS
C72-LDD-FC-FWRB3Y	1.09E-03	4.34E-06	1	FEEDWATER RUNBACK INPUT SWITCH 3 FAILS

Table 13.7-4

Results - Internal Flooding At-Power Importance Measure Report

F-V and RAW Importance Measures Report (F-V = Fussell-Vesely Importance Measure; RAW = Risk Achievement Worth Importance Measure) Flooding At-Power Core Damage Frequency = 6.95E-09				
Event Name	**Probability**	**Fus Ves**	**RAW**	**Description**
C72-LDD-FC-LOADS	1.86E-06	1.83E-03	981.12	COMMON CAUSE FAILURE OF DPS LOAD DRIVERS
C72-LDD-FC-S1AB32P1	1.09E-03	3.49E-05	1.03	VALVE F104A FIRST LOAD DRIVER FAILS TO ACTUATE
C72-LDD-FC-S1BB32P2	1.09E-03	3.49E-05	1.03	VALVE F104B FIRST LOAD DRIVER FAILS TO ACTUATE
C72-LDD-FC-S1F004A	1.09E-03	3.28E-04	1.3	F004A FIRST SERIES LOAD DRIVER FAILS ACTUATE
C72-LDD-FC-S1F004B	1.09E-03	3.28E-04	1.3	F004B FIRST SERIES LOAD DRIVER FAILS ACTUATE
C72-LDD-FC-S1F004C	1.09E-03	3.28E-04	1.3	F004C FIRST SERIES LOAD DRIVER FAILS ACTUATE
C72-LDD-FC-S1F004D	1.09E-03	3.28E-04	1.3	F004D FIRST SERIES LOAD DRIVER FAILS ACTUATE
C72-LDD-FC-S1F004E	1.09E-03	7.02E-05	1.06	F004E FIRST SERIES LOAD DRIVER FAILS ACTUATE
C72-LDD-FC-S1F004F	1.09E-03	7.02E-05	1.06	F004F FIRST SERIES LOAD DRIVER FAILS ACTUATE
C72-LDD-FC-S1F004G	1.09E-03	7.02E-05	1.06	F004G FIRST SERIES LOAD DRIVER FAILS ACTUATE
C72-LDD-FC-S1F004H	1.09E-03	7.02E-05	1.06	F004H FIRST SERIES LOAD DRIVER FAILS ACTUATE
C72-LDD-FC-S1XB32P1	1.09E-03	9.54E-05	1.09	VALVE F105A FIRST LOAD DRIVER FAILS TO ACTUATE
C72-LDD-FC-S1YB32P2	1.09E-03	9.54E-05	1.09	VALVE F105B FIRST LOAD DRIVER FAILS TO ACTUATE
C72-LDD-FC-S2AB32P1	1.09E-03	3.49E-05	1.03	VALVE F104A SECOND LOAD DRIVER FAILS TO ACTUATE
C72-LDD-FC-S2BB32P2	1.09E-03	3.49E-05	1.03	VALVE F104B SECOND LOAD DRIVER FAILS TO ACTUATE
C72-LDD-FC-S2F004A	1.09E-03	3.28E-04	1.3	F004A SECOND SERIES LOAD DRIVER FAILS TO ACTUATE
C72-LDD-FC-S2F004B	1.09E-03	3.28E-04	1.3	F004B SECOND SERIES LOAD DRIVER FAILS TO ACTUATE
C72-LDD-FC-S2F004C	1.09E-03	3.28E-04	1.3	F004C SECOND SERIES LOAD DRIVER FAILS TO ACTUATE
C72-LDD-FC-S2F004D	1.09E-03	3.28E-04	1.3	F004D SECOND SERIES LOAD DRIVER FAILS TO ACTUATE

Table 13.7-4

Results - Internal Flooding At-Power Importance Measure Report

F-V and RAW Importance Measures Report (F-V = Fussell-Vesely Importance Measure; RAW = Risk Achievement Worth Importance Measure) Flooding At-Power Core Damage Frequency = 6.95E-09				
Event Name	**Probability**	**Fus Ves**	**RAW**	**Description**
C72-LDD-FC-S2F004E	1.09E-03	7.02E-05	1.06	F004E SECOND SERIES LOAD DRIVER FAILS TO ACTUATE
C72-LDD-FC-S2F004F	1.09E-03	7.02E-05	1.06	F004F SECOND SERIES LOAD DRIVER FAILS TO ACTUATE
C72-LDD-FC-S2F004G	1.09E-03	7.02E-05	1.06	F004G SECOND SERIES LOAD DRIVER FAILS TO ACTUATE
C72-LDD-FC-S2F004H	1.09E-03	7.02E-05	1.06	F004H SECOND SERIES LOAD DRIVER FAILS TO ACTUATE
C72-LDD-FC-S2XB32P1	1.09E-03	9.54E-05	1.09	VALVE F105A SECOND LOAD DRIVER FAILS TO ACTUATE
C72-LDD-FC-S2YB32P2	1.09E-03	9.54E-05	1.09	VALVE F105B SECOND LOAD DRIVER FAILS TO ACTUATE
C72-LDD-FC-S3AB32P1	1.09E-03	3.49E-05	1.03	VALVE F104A SECOND LOAD DRIVER FAILS TO ACTUATE
C72-LDD-FC-S3BB32P2	1.09E-03	3.49E-05	1.03	LOAD DRIVER FAILS DURING OPERATION
C72-LDD-FC-S3F004A	1.09E-03	3.28E-04	1.3	F004A THIRD SERIES LOAD DRIVER FAILS TO ACTUATE
C72-LDD-FC-S3F004B	1.09E-03	3.28E-04	1.3	F004B THIRD SERIES LOAD DRIVER FAILS TO ACTUATE
C72-LDD-FC-S3F004C	1.09E-03	3.28E-04	1.3	F004C THIRD SERIES LOAD DRIVER FAILS TO ACTUATE
C72-LDD-FC-S3F004D	1.09E-03	3.28E-04	1.3	F004D THIRD SERIES LOAD DRIVER FAILS TO ACTUATE
C72-LDD-FC-S3F004E	1.09E-03	7.02E-05	1.06	F004E THIRD SERIES LOAD DRIVER FAILS TO ACTUATE
C72-LDD-FC-S3F004F	1.09E-03	7.02E-05	1.06	F004F THIRD SERIES LOAD DRIVER FAILS TO ACTUATE
C72-LDD-FC-S3F004G	1.09E-03	7.02E-05	1.06	F004G THIRD SERIES LOAD DRIVER FAILS TO ACTUATE
C72-LDD-FC-S3F004H	1.09E-03	7.02E-05	1.06	F004H THIRD SERIES LOAD DRIVER FAILS TO ACTUATE
C72-LOG-FC-D_1_2	1.00E-05	3.79E-03	379.14	CCF of two components: C72-LOG-FC-D1DPS & C72-LOG-FC-D2DPS
C72-LOG-FC-D_1_2_3	2.00E-06	7.28E-04	364.09	CCF of three components: C72-LOG-FC-D1DPS & C72-LOG-FC-D2DPS & C72-LOG-FC-D3DPS

Table 13.7-4

Results - Internal Flooding At-Power Importance Measure Report

F-V and RAW Importance Measures Report

(F-V = Fussell-Vesely Importance Measure; RAW = Risk Achievement Worth Importance Measure)

Flooding At-Power

Core Damage Frequency = 6.95E-09

Event Name	Probability	Fus Ves	RAW	Description
C72-LOG-FC-D_1_3	1.00E-05	3.79E-03	379.14	CCF of two components: C72-LOG-FC-D1DPS & C72-LOG-FC-D3DPS
C72-LOG-FC-D_2_3	1.00E-05	3.79E-03	379.14	CCF of two components: C72-LOG-FC-D2DPS & C72-LOG-FC-D3DPS
C72-LOG-FC-D1DPS	3.60E-04	8.04E-05	1.22	LOGIC UNIT FAILS TO FUNCTION
C72-LOG-FC-D2DPS	3.60E-04	8.04E-05	1.22	LOGIC UNIT FAILS TO FUNCTION
C72-LOG-FC-D3DPS	3.60E-04	8.04E-05	1.22	LOGIC UNIT FAILS TO FUNCTION
C74-ATM-FC-L2_ALL	5.00E-06	7.79E-06	2.54	CCF of all components in group 'C74-ATM-FC-L2'
C74-ATM-FC-PR_ALL	5.00E-06	7.79E-06	2.54	CCF of all components in group 'C74-ATM-FC-PR'
C74-LOG-FC-AT-_1_2_3	6.67E-07	1.92E-07	1.26	CCF of three components: C74-LOG-FC-ATWSD1 & C74-LOG-FC-ATWSD2 & C74-LOG-FC-ATWS
C74-LOG-FC-AT-_1_2_4	6.67E-07	1.92E-07	1.26	CCF of three components: C74-LOG-FC-ATWSD1 & C74-LOG-FC-ATWSD2 & C74-LOG-FC-ATWS
C74-LOG-FC-AT-_1_3_4	6.67E-07	1.92E-07	1.26	CCF of three components: C74-LOG-FC-ATWSD1 & C74-LOG-FC-ATWSD3 & C74-LOG-FC-ATWS
C74-LOG-FC-AT-_2_3_4	6.67E-07	1.92E-07	1.26	CCF of three components: C74-LOG-FC-ATWSD2 & C74-LOG-FC-ATWSD3 & C74-LOG-FC-ATWS
C74-LOG-FC-AT-_ALL	1.80E-05	3.32E-05	2.82	CCF of all components in group 'C74-LOG-FC-AT-'
CRD-HX_-LK-CRDB	2.40E-05	1.31E-05	1.54	CRD PUMP B OIL COOLER (LEAK OR RUPTURE)
E50-LOG-FC-THERM-A-TR1	1.20E-04	0.00E+00	1	LOGIC UNIT FAILS TO FUNCTION
E50-LOG-FC-THERM-B-TR1	1.20E-04	0.00E+00	1	LOGIC UNIT FAILS TO FUNCTION
E50-SQV-CC-INJ_ALL	1.50E-04	3.34E-02	223.23	CCF of all components in group 'E50-SQV-CC-INJ'

Table 13.7-4

Results - Internal Flooding At-Power Importance Measure Report

F-V and RAW Importance Measures Report

(F-V = Fussell-Vesely Importance Measure; RAW = Risk Achievement Worth Importance Measure)

Flooding At-Power

Core Damage Frequency = 6.95E-09

Event Name	Probability	Fus Ves	RAW	Description
E50-UV_-CC-INJ_ALL	1.72E-05	3.51E-03	204.85	CCF of all components in group 'E50-UV_-CC-INJ'
E50-XHE-FO-DLTR2	1.77E-02	0.00E+00	1	OPERATOR FAILS TO ENABLE TRAIN 2
G21-BV_-CC-F346	1.00E-04	8.43E-06	1.08	MANUAL VALVE FAILS TO OPEN
G21-HX_-LK-B001A	2.40E-05	1.31E-05	1.54	HEAT EXCHANGER B001A FAILS WHILE OPERATING
G21-HX_-LK-B001B	2.40E-05	1.31E-05	1.54	HEAT EXCHANGER B001B FAILS WHILE OPERATING
G21-MOV-CC-2_1_2	4.44E-04	9.26E-05	1.21	CCF of two components: G21-MOV-CC-F332A & G21-MOV-CC-F332B
G21-MOV-CC-F011A	4.00E-03	2.56E-06	1	MOTOR OPER. VALVE F011A FAILS TO OPEN
G21-MOV-CC-F011B	4.00E-03	2.56E-06	1	MOTOR OPER. VALVE F011B FAILS TO OPEN
G21-MOV-CC-F013A	4.00E-03	2.56E-06	1	MOTOR OPER. VALVE F013A FAILS TO OPEN
G21-MOV-CC-F013B	4.00E-03	2.56E-06	1	MOTOR OPER. VALVE F013B FAILS TO OPEN
G21-MOV-CC-F014A	4.00E-03	2.56E-06	1	MOTOR OPER. VALVE F014A FAILS TO OPEN
G21-MOV-CC-F014B	4.00E-03	2.56E-06	1	MOTOR OPER. VALVE F014B FAILS TO OPEN
G21-MOV-CC-F046B	4.00E-03	2.56E-06	1	MOTOR OPERATED VALVE P21-F046B FAILS TO OPEN
G21-MOV-CC-F047B	4.00E-03	2.56E-06	1	MOTOR OPERATED VALVE P21-F047B FAILS TO OPEN
G21-MOV-CC-F332A	4.00E-03	1.28E-06	1	MOTOR OPERATED VALVE FAILS TO OPEN
G21-MOV-CC-F332B	4.00E-03	1.28E-06	1	MOTOR OPERATED VALVE FAILS TO OPEN
G21-MOV-OO-F003A	4.00E-03	2.56E-06	1	MOTOR OPERATED VALVE F003A FAILS TO CLOSE
G21-MOV-OO-F008A	4.00E-03	2.56E-06	1	MOTOR OPER. VALVE F008A FAILS TO CLOSE
G21-MP_-FR-PLP	6.00E-04	1.17E-04	1.19	MOTOR-DRIVEN LPI PUMP FAILS TO RUN

Table 13.7-4

Results - Internal Flooding At-Power Importance Measure Report

F-V and RAW Importance Measures Report (F-V = Fussell-Vesely Importance Measure; RAW = Risk Achievement Worth Importance Measure) Flooding At-Power Core Damage Frequency = 6.95E-09				
Event Name	**Probability**	**Fus Ves**	**RAW**	**Description**
G21-MP_-FS-C001A	2.00E-03	6.39E-07	1	PUMP C001A FAILS TO START
G21-MP_-FS-C001B	2.00E-03	6.39E-07	1	MOTOR-DRIVEN PUMP C001B FAILS TO START
G21-MP_-FS-PLP	2.00E-03	5.36E-04	1.26	MOTOR-DRIVEN LPI PUMP FAILS TO START
G21-NST-TM-TRAINB	9.00E-03	8.31E-06	1	TRAIN B IN MAINTENANCE
G21-UV_-CC-F347	1.00E-04	8.43E-06	1.08	CHECK VALVE F347 FAILS TO OPEN
G21-UV_-CC-FU438	1.00E-04	8.43E-06	1.08	LPI DISCHARGE CHECK VALVE FAILS TO OPEN
G21-UV_-OO-F331A	1.00E-03	2.08E-04	1.21	CHECK VALVE F331A FAILS TO CLOSE
G21-UV_-OO-F331B	1.00E-03	2.08E-04	1.21	CHECK VALVE F331B FAILS TO CLOSE
G21-XHE-FO-RSPC	1.61E-02	1.93E-05	1	OPERATOR FAILS TO RECOG. NEED FOR SPC
G31-ACV-OO-F002A	2.00E-03	5.97E-06	1	NOV F002A FAILS TO CLOSE
G31-ACV-OO-F003A	2.00E-03	5.97E-06	1	ACV F003A FAILS TO CLOSE
G31-ACV-OO-F007A	2.00E-03	5.97E-06	1	NOV F007A FAILS TO CLOSE
G31-ACV-OO-F008A	2.00E-03	5.97E-06	1	ACV F008A FAILS TO CLOSE
G31-HX_-LK-B002A	2.40E-05	1.31E-05	1.54	HEAT EXCHANGER 2A FOR RWCU/SDCS FAILS WHILE OPERATING
G31-HX_-LK-B002B	2.40E-05	1.31E-05	1.54	HEAT EXCHANGER B FOR RWCU/SDCS FAILS WHILE OPERATING
G31-MOV-CC-F013A	4.00E-03	8.31E-07	1	MOTOR OPERATED VALVE F013A SUPPLY TO RWCU PUMP C001A FAILS TO OPEN
G31-MOV-CC-F013B	4.00E-03	8.31E-07	1	MOTOR OPERATED VALVE F013B SUPPLY TO RWCU PUMP C001B FAILS TO OPEN
G31-MOV-CC-F022B	4.00E-03	8.31E-07	1	MOV F022B RWCU/SDC INJECTION TO FWA FAILS TO OPEN

Table 13.7-4

Results - Internal Flooding At-Power Importance Measure Report

F-V and RAW Importance Measures Report (F-V = Fussell-Vesely Importance Measure; RAW = Risk Achievement Worth Importance Measure) Flooding At-Power Core Damage Frequency = 6.95E-09				
Event Name	**Probability**	**Fus Ves**	**RAW**	**Description**
G31-MOV-CC-F044B	4.00E-03	8.31E-07	1	MOV F044B SUCT FROM VESSEL BOTTOM TO RWCU FAILS TO OPEN
G31-NST-TM-B	9.00E-03	2.04E-06	1	RWCU/SDCS TRAIN B IN MAINTENANCE OR OUT OF SERVICE
G31-TRN-RE-TRAINB	8.07E-03	1.85E-06	1	RESTORATION ERRORS RWCU/SDC TRAIN B
G31-UV_-OO_1_2	5.26E-05	2.42E-05	1.46	CCF of two components: G31-UV_-OO-F023A & G31-UV_-OO-F024A
G31-XHE-FO-SDC	1.77E-02	3.25E-04	1.02	OPERATOR FAILS TO ACTUATE SDC MODE NO MSL LOCA OUSIDE CONTAINMENT NO SLCS
G31-XHE-FO-SDCATWS	1.76E-01	2.93E-05	1	OPERATOR FAILS TO ACTUATE SDC MODE ATWS
L2-BI_FN-ESTIMATE	2.72E-04	0.00E+00	1	BiMAC PIPING PLUGS
L2-E50-LOG-FC-PLC_ALL	2.84E-06	0.00E+00	1	CCF of all components in group 'L2-E50-LOG-FC-PLC'
L2-E50-RE_-FD-SQUIBS_ALL	5.00E-06	0.00E+00	1	CCF of all components in group 'L2-E50-RE_-FD-SQUIBS'
L2-E50-SQV-CC-DELUGE_ALL	1.50E-04	0.00E+00	1	CCF of all components in group 'L2-E50-SQV-CC-DELUGE'
L2-E50-TS_-CC-PRM_ALL	5.00E-06	0.00E+00	1	CCF of all components in group 'L2-E50-TS_-CC-PRM'
N21-ACV-CC-F0016	2.00E-03	3.66E-03	2.82	AIR OPERATED VALVE F0016 FAILS TO OPEN
N21-ACV-OC-F0016	2.40E-05	1.75E-05	1.73	AIR OPERATED VALVE N21-F0016 FAILS TO REMAIN OPEN
N21-ACV-OC-F0018	2.40E-05	1.75E-05	1.73	AIR OPERATED VALVE N21-F018 FAILS TO REMAIN OPEN
N21-AHU-FR-COND_1_2	1.26E-05	8.94E-06	1.7	CCF of two components: N21-AHU-FR-CONDA & N21-AHU-FR-CONDB
N21-AHU-FR-FW_1_2	1.26E-05	8.94E-06	1.7	CCF of two components: N21-AHU-FR-FWA & N21-AHU-FR-FWB
N21-MOV-OC-F0057	3.36E-06	1.02E-06	1.3	MOTOR OPERATED VALVE N21-F0057 FAILS TO REMAIN OPEN

Table 13.7-4

Results - Internal Flooding At-Power Importance Measure Report

F-V and RAW Importance Measures Report (F-V = Fussell-Vesely Importance Measure; RAW = Risk Achievement Worth Importance Measure) Flooding At-Power Core Damage Frequency = 6.95E-09				
Event Name	**Probability**	**Fus Ves**	**RAW**	**Description**
N21-MP_-FR-COND_ALL	1.42E-05	1.02E-05	1.7	CCF of all components in group 'N21-MP_-FR-COND'
N21-MPF-FR_ALL	1.42E-05	1.02E-05	1.7	CCF of all components in group 'N21-MPF-FR'
N21-MPF-FR-BP_ALL	1.42E-05	1.02E-05	1.7	CCF of all components in group 'N21-MPF-FR-BP'
N21-STR-PG_ALL	5.68E-06	3.71E-06	1.64	CCF of all components in group 'N21-STR-PG'
N21-XHE-FO-CONDMU	1.63E-01	1.38E-03	1.01	FAILURE TO MANUALLY OPEN CONDENSER MAKEUP VALVES
N21-XHE-FO-FWRERUN	1.76E-01	7.05E-03	1.03	OPERATOR FAILS TO RESTART FDW AFTER RUNBACK - ATWS
N37-HOV-CC_ALL	1.00E-04	1.18E-05	1.11	CCF of all components in group 'N37-HOV-CC'
NICWSA-SYS-FAILS	1.00E-03	7.03E-04	1.7	NUCLEAR ISLAND CHILLED WATER SUBSYSTEM TRAIN A FAILS
NICWSB-SYS-FAILS	1.00E-03	7.06E-04	1.7	NUCLEAR ISLAND CHILLED WATER SUBSYSTEM TRAIN B FAILS
P21-ACV-CC-F0023_1_2	1.93E-04	2.83E-05	1.14	CCF of two components: P21-ACV-CC-F0023A & P21-ACV-CC-F0023B
P21-ACV-CC-F0023A	2.00E-03	3.04E-05	1.01	AIR OPERATED VALVE F0023A FAILS TO OPEN
P21-ACV-CC-F0023B	2.00E-03	2.98E-05	1.01	AIR OPERATED VALVE F0023B FAILS TO OPEN
P21-ACV-OO-CCF23_1_2	2.22E-04	2.19E-05	1.1	CCF of two components: P21-ACV-OO-F023A & P21-ACV-OO-F023B
P21-ACV-OO-F0004	2.00E-03	4.40E-04	1.22	AIR OPERATED VALVE F0004 FAILS TO CLOSE
P21-ACV-OO-F0016_1_2	1.93E-04	3.39E-04	2.74	CCF of two components: P21-ACV-OO-F016A & P21-ACV-OO-F016B
P21-ACV-OO-F0027	2.00E-03	4.40E-04	1.22	AIR OPERATED VALVE F0027 FAILS TO CLOSE
P21-ACV-OO-F0061	2.00E-03	4.40E-04	1.22	AIR OPERATED VALVE F0061 FAILS TO CLOSE
P21-ACV-OO-F016A	2.00E-03	3.59E-05	1.02	AIR OPERATED VALVE F016A FAILS TO CLOSE
P21-ACV-OO-F016B	2.00E-03	3.53E-05	1.02	AIR OPERATED VALVE F016B FAILS TO CLOSE

Table 13.7-4

Results - Internal Flooding At-Power Importance Measure Report

F-V and RAW Importance Measures Report

(F-V = Fussell-Vesely Importance Measure; RAW = Risk Achievement Worth Importance Measure)

Flooding At-Power

Core Damage Frequency = 6.95E-09

Event Name	Probability	Fus Ves	RAW	Description
P21-ACV-OO-F023A	2.00E-03	3.04E-05	1.01	AIR OPERATED VALVE FAILS TO CLOSE
P21-ACV-OO-F023B	2.00E-03	2.98E-05	1.01	AIR OPERATED VALVE FAILS TO CLOSE
P21-ACV-OO-XTIE_1_2_3	1.57E-04	2.01E-05	1.13	CCF of three components: P21-ACV-OO-F0004 & P21-ACV-OO-F0027 & P21-ACV-OO-F0061
P21-AHU-FR_1_2	1.26E-05	1.41E-05	2.1	CCF of two components: P21-AHU-FR-RCCWA & P21-AHU-FR-RCCWB
P21-AHU-FR-RCCWA	2.40E-04	1.55E-04	1.64	AIR HANDLING UNIT RCCWS ROOM A FAILS TO RUN
P21-AHU-FR-RCCWB	2.40E-04	1.55E-04	1.64	AIR HANDLING UNIT RCCWS ROOM TRAIN B FAILS TO RUN
P21-AHU-FS_1_2	6.67E-04	1.25E-04	1.18	CCF of two components: P21-AHU-FS-RCCWA & P21-AHU-FS-RCCWB
P21-AHU-FS-RCCWA	6.00E-03	1.47E-04	1.02	AIR HANDLING UNIT RCCWS ROOM A FAILS TO START
P21-AHU-FS-RCCWB	6.00E-03	1.44E-04	1.02	AIR HANDLING UNIT RCCWS ROOM B FAILS TO START
P21-HX_-LK-B001A	2.40E-05	1.31E-05	1.54	HEAT EXCHANGER B001A FAILS WHILE OPERATING
P21-HX_-LK-B001B	2.40E-05	1.31E-05	1.54	HEAT EXCHANGER B001B FAILS WHILE OPERATING
P21-HX_-LK-B002A	2.40E-05	1.31E-05	1.54	HEAT EXCHANGER FAILURE (LEAK OR RUPTURE)
P21-HX_-LK-B002B	2.40E-05	1.31E-05	1.54	HEAT EXCHANGER B002B FAILS WHILE OPERATING
P21-HX_-LK-B003A	2.40E-05	1.31E-05	1.54	HEAT EXCHANGER (LEAK OR RUPTURE)
P21-HX_-LK-B003B	2.40E-05	1.31E-05	1.54	HEAT EXCHANGER B003B FAILS WHILE OPERATING
P21-MOV-CC_ALL	1.48E-04	1.75E-05	1.12	CCF of all components in group 'P21-MOV-CC'
P21-MOV-CC-F0010A1	4.00E-03	8.24E-05	1.02	MOTOR OPERATED VALVE F0010A1 FAILS TO OPEN
P21-MOV-CC-F0010A2	4.00E-03	8.24E-05	1.02	MOTOR OPERATED VALVE F0010A2 FAILS TO OPEN

Table 13.7-4

Results - Internal Flooding At-Power Importance Measure Report

F-V and RAW Importance Measures Report

(F-V = Fussell-Vesely Importance Measure; RAW = Risk Achievement Worth Importance Measure)

Flooding At-Power

Core Damage Frequency = 6.95E-09

Event Name	Probability	Fus Ves	RAW	Description
P21-MOV-CC-F0010A3	4.00E-03	8.24E-05	1.02	MOTOR OPERATED VALVE F0010A3 FAILS TO OPEN
P21-MOV-CC-F0010B1	4.00E-03	8.06E-05	1.02	MOTOR OPERATED VALVE F0010B1 FAILS TO OPEN
P21-MOV-CC-F0010B2	4.00E-03	8.06E-05	1.02	MOTOR OPERATED VALVE F0010B2 FAILS TO OPEN
P21-MOV-CC-F0010B3	4.00E-03	8.06E-05	1.02	MOTOR OPERATED VALVE F0010B3 FAILS TO OPEN
P21-MOV-CC-F034B	4.00E-03	8.31E-07	1	MOV P21-F034B FROM RCCWS TO RWCU/SDC HX-B FAILS TO OPEN
P21-MP_-FR_1_2	1.15E-06	3.19E-07	1.28	CCF of two components: P21-MPC-FR-C001A & P21-MPC-FR-C001B
P21-MP_-FR_1_3	1.15E-06	3.19E-07	1.28	CCF of two components: P21-MPC-FR-C001A & P21-MPC-FR-C002A
P21-MP_-FR_1_4	1.15E-06	3.19E-07	1.28	CCF of two components: P21-MPC-FR-C001A & P21-MPC-FR-C002B
P21-MP_-FR_1_5	1.15E-06	3.19E-07	1.28	CCF of two components: P21-MPC-FR-C001A & P21-MPC-FR-C003A
P21-MP_-FR_1_6	1.15E-06	3.19E-07	1.28	CCF of two components: P21-MPC-FR-C001A & P21-MPC-FR-C003B
P21-MP_-FR_2_3	1.15E-06	3.19E-07	1.28	CCF of two components: P21-MPC-FR-C001B & P21-MPC-FR-C002A
P21-MP_-FR_2_4	1.15E-06	3.19E-07	1.28	CCF of two components: P21-MPC-FR-C001B & P21-MPC-FR-C002B
P21-MP_-FR_2_5	1.15E-06	3.19E-07	1.28	CCF of two components: P21-MPC-FR-C001B & P21-MPC-FR-C003A
P21-MP_-FR_2_6	1.15E-06	3.19E-07	1.28	CCF of two components: P21-MPC-FR-C001B & P21-MPC-FR-C003B
P21-MP_-FR_ALL	1.33E-05	1.49E-05	2.11	CCF of all components in group 'P21-MP_-FR'
P21-MP_-FS_ALL	1.56E-04	1.96E-05	1.12	CCF of all components in group 'P21-MP_-FS'
P21-MPC-FR-C001A	6.00E-04	4.14E-04	1.69	MOTOR DRIVEN PUMP C001A FAILS TO RUN
P21-MPC-FR-C001B	6.00E-04	4.14E-04	1.69	MOTOR DRIVEN PUMP C001B FAILS TO RUN
P21-MPC-FR-C002A	6.00E-04	2.91E-06	1	MOTOR-DRIVEN PUMP C002A FAILS TO RUN

Table 13.7-4

Results - Internal Flooding At-Power Importance Measure Report

F-V and RAW Importance Measures Report

(F-V = Fussell-Vesely Importance Measure; RAW = Risk Achievement Worth Importance Measure)

Flooding At-Power

Core Damage Frequency = 6.95E-09

Event Name	Probability	Fus Ves	RAW	Description
P21-MPC-FR-C002B	6.00E-04	2.91E-06	1	MOTOR-DRIVEN PUMP C002B FAILS TO RUN
P21-MPC-FR-C003A	6.00E-04	2.91E-06	1	MOTOR-DRIVEN PUMP C0003A FAILS TO RUN
P21-MPC-FR-C003B	6.00E-04	2.91E-06	1	MOTOR-DRIVEN PUMP C003B FAILS TO RUN
P21-MPC-FS-C001A	2.00E-03	3.04E-05	1.01	MOTOR DRIVEN PUMP C001A FAILS TO START
P21-MPC-FS-C001B	2.00E-03	2.98E-05	1.01	MOTOR-DRIVEN PUMP C001B FAILS TO START
P21-MPC-FS-C002A	2.00E-03	3.04E-05	1.01	MOTOR-DRIVEN PUMP C002A FAILS TO START
P21-MPC-FS-C002B	2.00E-03	2.98E-05	1.01	MOTOR-DRIVEN PUMP C002B FAILS TO START
P21-MPC-FS-C003A	2.00E-03	3.04E-05	1.01	MOTOR-DRIVEN PUMP C0003A FAILS TO START
P21-MPC-FS-C003B	2.00E-03	2.98E-05	1.01	MOTOR-DRIVEN PUMP C003B FAILS TO START
P21-NSC-TM-B001A	1.50E-03	1.72E-05	1.01	HEAT EXCHANGER B001A UNAVAILABLE DUE TO MAINTENANCE
P21-NSC-TM-B001B	1.50E-03	1.67E-05	1.01	HEAT EXCHANGER B001B UNAVAILABLE DUE TO MAINTENANCE
P21-NSC-TM-B002A	1.50E-03	1.72E-05	1.01	HEAT EXCHANGER B002A UNAVAILABLE DUE TO MAINTENANCE
P21-NSC-TM-B002B	1.50E-03	1.67E-05	1.01	HEAT EXCHANGER B002B UNAVAILABLE DUE TO MAINTENANCE
P21-NSC-TM-B003A	1.50E-03	1.72E-05	1.01	HEAT EXCHANGER B003A UNAVAILABLE DUE TO MAINTENANCE
P21-NSC-TM-B003B	1.50E-03	1.67E-05	1.01	HEAT EXCHANGER B003B UNAVAILABLE DUE TO MAINTENANCE
P21-NSC-TM-C001A	1.50E-03	1.72E-05	1.01	PUMP C001A IN MAINTENANCE
P21-NSC-TM-C001B	1.50E-03	1.67E-05	1.01	PUMP C001B IN MAINTENANCE
P21-NSC-TM-C002A	1.50E-03	1.72E-05	1.01	PUMP C002A IN MAINTENANCE
P21-NSC-TM-C002B	1.50E-03	1.67E-05	1.01	PUMP C002B IN MAINTENANCE

Table 13.7-4

Results - Internal Flooding At-Power Importance Measure Report

F-V and RAW Importance Measures Report (F-V = Fussell-Vesely Importance Measure; RAW = Risk Achievement Worth Importance Measure) Flooding At-Power Core Damage Frequency = 6.95E-09				
Event Name	**Probability**	**Fus Ves**	**RAW**	**Description**
P21-NSC-TM-C003A	1.50E-03	1.72E-05	1.01	PUMP C003A IN MAINTENANCE
P21-NSC-TM-C003B	1.50E-03	1.67E-05	1.01	PUMP C003B IN MAINTENANCE
P21-TRN-RE-HX1A	8.07E-03	2.02E-04	1.02	FAILURE TO RESTORE RCCW TRAIN 1A HX
P21-TRN-RE-HX1B	8.07E-03	1.97E-04	1.02	FAILURE TO RESTORE RCCW TRAIN 1B HX
P21-TRN-RE-HX2A	8.07E-03	2.02E-04	1.02	FAILURE TO RESTORE RCCW TRAIN 2A HX
P21-TRN-RE-HX2B	8.07E-03	1.97E-04	1.02	FAILURE TO RESTORE RCCW TRAIN 2B HX
P21-TRN-RE-HX3A	8.07E-03	2.02E-04	1.02	FAILURE TO RESTORE RCCW TRAIN 3A HX
P21-TRN-RE-HX3B	8.07E-03	1.97E-04	1.02	FAILURE TO RESTORE RCCW TRAIN 3B HX
P21-TRN-RE-PUMP1A	8.07E-03	2.02E-04	1.02	FAILURE TO RESTORE RCCW TRAIN 1A PUMP
P21-TRN-RE-PUMP1B	8.07E-03	1.97E-04	1.02	FAILURE TO RESTORE RCCW TRAIN 1B PUMP
P21-TRN-RE-PUMP2A	8.07E-03	2.02E-04	1.02	FAILURE TO RESTORE RCCW TRAIN 2A PUMP
P21-TRN-RE-PUMP2B	8.07E-03	1.97E-04	1.02	FAILURE TO RESTORE RCCW TRAIN 2B PUMP
P21-TRN-RE-PUMP3A	8.07E-03	2.02E-04	1.02	FAILURE TO RESTORE RCCW TRAIN 3A PUMP
P21-TRN-RE-PUMP3B	8.07E-03	1.97E-04	1.02	FAILURE TO RESTORE RCCW TRAIN 3B PUMP
P21-UV_-CC-0001A1	1.00E-04	1.92E-07	1	CHECK VALVE 0001A1 FAILS TO OPEN
P21-UV_-CC-0001A2	1.00E-04	1.92E-07	1	CHECK VALVE 0001A2 FAILS TO OPEN
P21-UV_-CC-0001A3	1.00E-04	1.92E-07	1	CHECK VALVE 0001A3 FAILS TO OPEN
P21-UV_-CC-0001B1	1.00E-04	1.92E-07	1	CHECK VALVE 0001B1 FAILS TO OPEN
P21-UV_-CC-0001B2	1.00E-04	1.92E-07	1	CHECK VALVE 0001B2 FAILS TO OPEN

Table 13.7-4

Results - Internal Flooding At-Power Importance Measure Report

F-V and RAW Importance Measures Report

(F-V = Fussell-Vesely Importance Measure; RAW = Risk Achievement Worth Importance Measure)

Flooding At-Power

Core Damage Frequency = 6.95E-09

Event Name	Probability	Fus Ves	RAW	Description
P21-UV_-CC-0001B3	1.00E-04	1.92E-07	1	CHECK VALVE 0001B3 FAILS TO OPEN
P22-ACV-OC-F0006	2.40E-05	1.75E-05	1.73	TCCW HX FLOW CONTROL VALVE FAILS TO REMAIN OPEN
P22-HX_-PG-B001A	2.40E-05	2.56E-06	1.1	HEAT EXCHANGER 1A FAILS
P22-HX_-PG-B001B	2.40E-05	2.56E-06	1.1	HEAT EXCHANGER 1B FAILS
P22-MP_-FR_1_2	4.26E-06	1.41E-06	1.31	CCF of two components: P22-MPC-FR-C001A & P22-MPC-FR-C001B
P22-MP_-FR_1_2_3	3.48E-06	1.15E-06	1.31	CCF of three components: P22-MPC-FR-C001A & P22-MPC-FR-C001B & P22-MPC-FR-C001C
P22-MP_-FR_1_3	4.26E-06	1.41E-06	1.31	CCF of two components: P22-MPC-FR-C001A & P22-MPC-FR-C001C
P22-MP_-FR_2_3	4.26E-06	1.41E-06	1.31	CCF of two components: P22-MPC-FR-C001B & P22-MPC-FR-C001C
P22-MPC-FR-C001A	6.00E-04	1.53E-06	1	MOTOR-DRIVEN PUMP A FOR TCCW FAILS TO RUN, GIVEN START
P22-MPC-FR-C001B	6.00E-04	1.53E-06	1	MOTOR-DRIVEN PUMP B FOR TCCW FAILS TO RUN, GIVEN START
P22-NSC-TM-HXS	7.50E-05	1.05E-04	2.38	MULTIPLE TCCW HXS OUT FOR TESTING/ MAINTENANCE
P22-NSC-TM-PUMPS	7.50E-05	1.05E-04	2.38	MULTIPLE TCCW PUMPS OUT FOR TESTING/ MAINTENANCE
P22-TNK-RP-A001	2.40E-06	7.67E-07	1.32	TCCW SURGE TANK LEAKS CATASTROPHICALLY
P22-TRN-RE-PUMP1C	8.07E-03	5.62E-06	1	FAILURE TO RESTORE TCCW PUMP 1C
P22-XHE-FO-HX	1.63E-01	5.11E-06	1	FAILURE TO ALIGN TCCW HX
P30-ACV-CC_1_2	1.93E-04	3.45E-06	1.02	CCF of two components: P30-ACV-CC-F023 & P30-ACV-CC-F026
P41-ACV-CC_ALL	1.21E-04	1.36E-05	1.11	CCF of all components in group 'P41-ACV-CC'
P41-ACV-CC-F004A	2.00E-03	3.04E-05	1.01	AIR OPERATED VALVE F004A FAILS TO OPEN

Table 13.7-4

Results - Internal Flooding At-Power Importance Measure Report

F-V and RAW Importance Measures Report (F-V = Fussell-Vesely Importance Measure; RAW = Risk Achievement Worth Importance Measure) Flooding At-Power Core Damage Frequency = 6.95E-09				
Event Name	**Probability**	**Fus Ves**	**RAW**	**Description**
P41-ACV-CC-F004B	2.00E-03	2.98E-05	1.01	AIR OPERATED VALVE F004B FAILS TO OPEN
P41-ACV-CC-F006A	2.00E-03	3.04E-05	1.01	AIR OPERATED VALVE F006A FAILS TO OPEN
P41-ACV-CC-F006B	2.00E-03	2.98E-05	1.01	AIR OPERATED VALVE F006B FAILS TO OPEN
P41-ACV-CC-F009A	2.00E-03	3.04E-05	1.01	AIR OPERATED VALVE F009A FAILS TO OPEN
P41-ACV-CC-F009B	2.00E-03	2.98E-05	1.01	AIR OPERATED VALVE F009B FAILS TO OPEN
P41-ACV-OC-F001A	2.40E-05	2.56E-06	1.1	VALVE P22-F001A FAILS TO REMAIN OPEN
P41-ACV-OC-F001B	2.40E-05	2.56E-06	1.1	VALVE P41-F001B FAILS TO REMAIN OPEN
P41-FAN-FR_1_2	4.44E-06	2.80E-05	7.15	CCF of two components: P41-FAN-FR-0001A & P41-FAN-FR-0001B
P41-FAN-FR_1_2_3	4.44E-07	1.18E-06	3.62	CCF of three components: P41-FAN-FR-0001A & P41-FAN-FR-0001B & P41-FAN-FR-0002A
P41-FAN-FR_1_2_4	4.44E-07	1.18E-06	3.62	CCF of three components: P41-FAN-FR-0001A & P41-FAN-FR-0001B & P41-FAN-FR-0002B
P41-FAN-FR_1_3_4	4.44E-07	1.18E-06	3.62	CCF of three components: P41-FAN-FR-0001A & P41-FAN-FR-0002A & P41-FAN-FR-0002B
P41-FAN-FR_1_4	4.44E-06	2.80E-05	7.15	CCF of two components: P41-FAN-FR-0001A & P41-FAN-FR-0002B
P41-FAN-FR_2_3	4.44E-06	2.80E-05	7.15	CCF of two components: P41-FAN-FR-0001B & P41-FAN-FR-0002A
P41-FAN-FR_2_3_4	4.44E-07	1.18E-06	3.62	CCF of three components: P41-FAN-FR-0001B & P41-FAN-FR-0002A & P41-FAN-FR-0002B
P41-FAN-FR_3_4	4.44E-06	2.80E-05	7.15	CCF of two components: P41-FAN-FR-0002A & P41-FAN-FR-0002B
P41-FAN-FR_ALL	1.20E-05	9.24E-05	8.63	CCF of all components in group 'P41-FAN-FR'

Table 13.7-4

Results - Internal Flooding At-Power Importance Measure Report

F-V and RAW Importance Measures Report

(F-V = Fussell-Vesely Importance Measure; RAW = Risk Achievement Worth Importance Measure)

Flooding At-Power

Core Damage Frequency = 6.95E-09

Event Name	Probability	Fus Ves	RAW	Description
P41-FAN-FS-0001B	6.00E-04	2.24E-07	1	MECHANICAL DRAFT COOLING TOWER FAN 1B FAILS TO START
P41-FAN-FS-0002B	6.00E-04	2.24E-07	1	MECHANICAL DRAFT COOLING TOWER FAN 2B FAILS TO START
P41-MOV-CC-PMP_ALL	1.45E-04	1.04E-05	1.07	CCF of all components in group 'P41-MOV-CC-PMP'
P41-MOV-CC-PMPF002A	4.00E-03	3.39E-06	1	MOTOR OPERATED VALVE F002A FAILS TO OPEN
P41-MOV-CC-PMPF002B	4.00E-03	3.39E-06	1	MOTOR OPERATED VALVE F002B FAILS TO OPEN
P41-MOV-CC-PMPF004A	4.00E-03	3.35E-05	1.01	MOTOR OPERATED VALVE MV-F004A FAILS TO OPEN
P41-MPW-FR_ALL	3.20E-06	1.99E-05	7.07	CCF of all components in group 'P41-MPW-FR'
P41-MPW-FR-C001A	6.00E-04	2.14E-06	1	MOTOR DRIVEN PUMP C001A FAILS TO RUN
P41-MPW-FR-C001B	6.00E-04	2.14E-06	1	MOTOR DRIVEN PUMP C001B FAILS TO RUN,
P41-MPW-FR-C002A	6.00E-04	2.14E-06	1	MOTOR DRIVEN PUMP C002A FAILS TO RUN
P41-MPW-FR-C002B	6.00E-04	2.14E-06	1	MOTOR-DRIVEN PUMP C002B FAILS TO RUN
P41-MPW-FS_1_2_3	1.89E-05	3.83E-07	1.02	CCF of three components: P41-MPW-FS-C001A & P41-MPW-FS-C001B & P41-MPW-FS-C002A
P41-MPW-FS_1_2_4	1.89E-05	3.83E-07	1.02	CCF of three components: P41-MPW-FS-C001A & P41-MPW-FS-C001B & P41-MPW-FS-C002B
P41-MPW-FS_1_3_4	1.89E-05	3.83E-07	1.02	CCF of three components: P41-MPW-FS-C001A & P41-MPW-FS-C002A & P41-MPW-FS-C002B
P41-MPW-FS_2_3_4	1.89E-05	3.83E-07	1.02	CCF of three components: P41-MPW-FS-C001B & P41-MPW-FS-C002A & P41-MPW-FS-C002B
P41-MPW-FS_ALL	1.15E-04	8.08E-06	1.07	CCF of all components in group 'P41-MPW-FS'

Table 13.7-4

Results - Internal Flooding At-Power Importance Measure Report

F-V and RAW Importance Measures Report (F-V = Fussell-Vesely Importance Measure; RAW = Risk Achievement Worth Importance Measure) Flooding At-Power Core Damage Frequency = 6.95E-09				
Event Name	**Probability**	**Fus Ves**	**RAW**	**Description**
P41-MPW-FS-C001A	2.00E-03	6.39E-07	1	MOTOR-DRIVEN PUMP C001A FAILS TO START
P41-MPW-FS-C001B	2.00E-03	6.39E-07	1	MOTOR-DRIVEN PUMP C001B FAILS TO START
P41-MPW-FS-C002A	2.00E-03	1.32E-05	1.01	MOTOR-DRIVEN PUMP C002A FAILS TO START
P41-MPW-FS-C002B	2.00E-03	1.32E-05	1.01	MOTOR-DRIVEN PUMP C002B FAILS TO START
P41-NSC-TM-C002A	1.50E-03	7.12E-06	1	PUMP C002A IN MAINTENANCE
P41-NSC-TM-C002B	1.50E-03	7.12E-06	1	PUMP C002B IN MAINTENANCE
P41-STR-PG_ALL	5.68E-06	4.03E-05	8.01	CCF of all components in group 'P41-STR-PG'
P41-STR-PG-D01A	2.40E-04	1.60E-07	1	STRAINER P41-D001A PLUGGED
P41-STR-PG-D01B	2.40E-04	1.60E-07	1	STRAINER P41-D001B PLUGGED
P41-STR-PG-D02A	2.40E-04	1.60E-07	1	STRAINER P41-D002A PLUGGED
P41-STR-PG-D02B	2.40E-04	1.60E-07	1	STRAINER P41-D002B PLUGGED
P41-SYS-FC-HVACPSW-A	1.00E-03	1.09E-04	1.11	PSW-A ROOM COOLING FAILURE
P41-SYS-FC-HVACPSW-B	1.00E-03	1.09E-04	1.11	PSW-B ROOM COOLING FAILURE
P41-TRN-RE-PUMP1A	8.07E-03	8.75E-06	1	FAILURE TO RESTORE PSW PUMP 1A
P41-TRN-RE-PUMP1B	8.07E-03	8.75E-06	1	FAILURE TO RESTORE PSW PUMP 1B
P41-TRN-RE-PUMP2A	8.07E-03	7.93E-05	1.01	FAILURE TO RESTORE PSW PUMP 2A
P41-TRN-RE-PUMP2B	8.07E-03	7.93E-05	1.01	FAILURE TO RESTORE PSW PUMP 2B
P41-XHE-FO-TCCWHX	1.63E-01	5.11E-06	1	FAILURE TO MANUALLY ALIGN STANDBY TCCW HX
P51-CMP-FR-0001-A	2.40E-03	4.38E-06	1	MOTOR-DRIVEN AIR COMPRESSOR 0001-A FAILS TO RUN

Table 13.7-4

Results - Internal Flooding At-Power Importance Measure Report

F-V and RAW Importance Measures Report

(F-V = Fussell-Vesely Importance Measure; RAW = Risk Achievement Worth Importance Measure)

Flooding At-Power

Core Damage Frequency = 6.95E-09

Event Name	Probability	Fus Ves	RAW	Description
P51-CMP-FR-CCF_1_2	2.10E-05	2.24E-07	1.01	CCF of two components: P51-CMP-FR-0001-A & P51-CMP-FR-0001-B
P51-CMP-FR-CCF_ALL	5.68E-05	1.70E-04	3.95	CCF of all components in group 'P51-CMP-FR-CCF'
P51-CMP-FS-0001-A	2.00E-02	1.53E-06	1	MOTOR-DRIVEN AIR COMPRESS. 0001-A FAILS TO START
P51-CMP-FS-0001-B	2.00E-02	2.52E-06	1	MOTOR-DRIVEN AIR COMPRESS. 0001-B FAILS TO START
P51-CMP-FS-0001-C	2.00E-02	8.31E-07	1	MOTOR-DRIVEN AIR COMPRESS. 0001-C FAILS TO START
P51-CMP-FS-0001-D	2.00E-02	9.90E-07	1	MOTOR-DRIVEN AIR COMPRESS. 0001-D FAILS TO START
P51-CMP-FS-CCF_1_3	3.70E-04	7.03E-07	1	CCF of two components: P51-CMP-FS-0001-A & P51-CMP-FS-0001-C
P51-CMP-FS-CCF_2_4	3.70E-04	7.03E-07	1	CCF of two components: P51-CMP-FS-0001-B & P51-CMP-FS-0001-D
P51-CMP-FS-CCF_ALL	1.00E-03	1.15E-05	1.01	CCF of all components in group 'P51-CMP-FS-CCF'
P51-CMP-RE-0001-B	8.07E-03	2.24E-07	1	SERVICE AIR SYSTEM COMPRESSOR RESTORATION ERROR
P51-NST-TM-CMP0001-CD	9.00E-03	2.88E-07	1	BACKUP COMPRESSOR IN TEST OR MAINTENANCE
P51-XHE-FO-0001-CD	1.77E-02	2.40E-06	1	OPERATOR FAILS TO ALIGN ONE BACKUP CMP TO STANDBY
P51-XHE-P21-BU	1.77E-02	6.08E-03	1.34	OPERATOR ACTION TO CONNECT ALTERNATE COOLING GIVEN RCCW FAILED
P52-ACV_OC-0001-A	2.40E-05	2.56E-07	1.01	AOV FAILS TO REMAIN OPEN
P52-BV_-OC-0008	7.20E-07	4.47E-07	1.62	MANUAL VALVE TRANSFERS CLOSED
P52-FLT-PG-DRY-0001-A	2.40E-04	6.17E-06	1.03	DRYER 0001-A PLUGGED
P52-XHE-CC-0001-B	1.77E-02	2.14E-04	1.01	OPERATOR FAILS TO OPEN STANDBY TRAIN AOV 0001-B
P54-ACV-CC-F014	2.00E-03	9.02E-04	1.45	AIR OPERATED VALVE F014 FAILS TO OPEN

Table 13.7-4

Results - Internal Flooding At-Power Importance Measure Report

F-V and RAW Importance Measures Report (F-V = Fussell-Vesely Importance Measure; RAW = Risk Achievement Worth Importance Measure) Flooding At-Power Core Damage Frequency = 6.95E-09				
Event Name	**Probability**	**Fus Ves**	**RAW**	**Description**
P54-ACV-OC-F009	2.40E-05	6.13E-06	1.25	F009 SPURIOUSLY CLOSED
P54-ACV-OO-F003	2.00E-03	3.19E-07	1	AIR OPERATED VALVE F003 FAILS TO CLOSE
P54-BV_-RE-F013A	4.04E-03	1.86E-03	1.46	RESTERATION ERROR OF F013A
P54-CPV-OC-CCF_1_2	2.93E-06	5.11E-07	1.16	CCF of two components: P54-CPV-OC-F005 & P54-CPV-OC-F016
P54-CPV-OC-F016	2.64E-05	6.13E-06	1.23	PRESSURE REGULATING FAILURE
P54-TNK-RP-F000A	2.40E-06	3.83E-07	1.15	NITROGEN BOTTLE RACK A FAILS CATASTROPHICALLY
P54-UV_-CC-CCF_1_2_3	2.27E-06	3.83E-07	1.15	CCF of three components: P54-UV_-CC-F010 & P54-UV_-CC-F025 & P54-UV_-CC-F027
P54-UV_-CC-F010	1.00E-04	2.56E-05	1.25	CHECK VALVE FAILS TO OPEN
P54-UV_-OC-F010	4.80E-06	1.21E-06	1.24	F010 FAILS CLOSED
P54-UV_-OC-F012A	4.80E-06	1.02E-06	1.21	CHECK VALVE FAILS TO REMAIN OPEN
P54-UV_-OO-F008	1.00E-03	3.19E-07	1	CHECK VALVE F008 FAILS TO CLOSE
R10-LOSP-EPRI	3.00E-03	5.89E-02	20.52	CONSEQUENTIAL LOSS OF PREFERRED OFFSITE POWER DUE TO A TRANSIENT
R10-MCB-CO-UATA	1.44E-05	7.92E-06	1.54	MEDIUM VOLTAGE CIRCUIT BREAKER ON UAT A OPENS SPURIOUSLY
R10-MCB-CO-UATB	1.44E-05	7.16E-06	1.49	MEDIUM VOLTAGE CIRCUIT BREAKER ON UAT B OPENS SPURIOUSLY
R10-SYS-FF-500KV	1.00E-03	4.26E-03	5.25	500KV SWITCHYARD FAILS DURING OPERATION
R10-SYS-TM-230KV	1.00E-02	1.02E-05	1	230 KV SWITCHYARD IN MAINTENANCE
R10-XFH-LP-CCF_3_4	2.53E-07	7.03E-07	3.78	CCF of two components: R10-XFH-LP-UATA & R10-XFH-LP-UATB
R10-XFH-LP-CCF_ALL	6.82E-07	1.92E-06	3.81	CCF of all components in group 'R10-XFH-LP-CCF'

Table 13.7-4

Results - Internal Flooding At-Power Importance Measure Report

F-V and RAW Importance Measures Report (F-V = Fussell-Vesely Importance Measure; RAW = Risk Achievement Worth Importance Measure) Flooding At-Power Core Damage Frequency = 6.95E-09				
Event Name	**Probability**	**Fus Ves**	**RAW**	**Description**
R10-XFH-LP-UATA	2.88E-05	1.75E-05	1.6	TRANSFORMER (HIGH VOLTAGE) UAT A FAILS TO CONTINUE OPERATING
R10-XFH-LP-UATB	2.88E-05	1.60E-05	1.55	TRANSFORMER (HIGH VOLTAGE) UAT B FAILS TO CONTINUE OPERATING
R10-XFH-TM-UATA	1.00E-04	6.61E-05	1.66	TRANSFORMER (HIGH VOLTAGE) UAT A IN MAINTENANCE
R10-XFH-TM-UATB	1.00E-04	5.98E-05	1.6	TRANSFORMER (HIGH VOLTAGE) UAT B IN MAINTENANCE
R11-BAC-LP-100A3	4.80E-06	1.21E-05	3.46	6.9 KV AC PIP-A LOADS BUS 1000A3 FAILS DURING OPERATION
R11-BAC-LP-100B3	4.80E-06	2.88E-06	1.59	6.9 KV AC PIP-A LOADS BUS 1000B3 FAILS DURING OPERATION
R11-BAC-LP-PIP_1_2	2.53E-07	3.29E-06	13.9	CCF of two components: R11-BAC-LP-100A3 & R11-BAC-LP-100B3
R11-BAC-TM-100A3	4.80E-06	1.21E-05	3.46	6.9 KV AC PIP-A LOADS BUS 1000A3 IN MAINTENANCE
R11-BAC-TM-100B3	4.80E-06	2.88E-06	1.59	6.9 KV AC PIP-A LOADS BUS 1000B3 IN MAINTENANCE
R11-MCB-CC-A3RATAY	5.00E-04	1.88E-06	1	MEDIUM CIRCUIT BREAKER FOR RAT A Y-WINDING FAILS TO OPEN
R11-MCB-CC-A3UATAY	4.00E-03	6.51E-05	1.02	MEDIUM VOLTAGE CIRCUIT BREAKER FOR UAT A Y-WINDING FAILS TO OPEN
R11-MCB-CC-B3RATBY	5.00E-04	1.88E-06	1	MEDIUM CIRCUIT BREAKER FOR RAT B Y-WINDING FAILS TO OPEN
R11-MCB-CC-B3UATBY	4.00E-03	5.53E-05	1.01	MEDIUM VOLTAGE CIRCUIT BREAKER FOR UAT B Y-WINDING FAILS TO OPEN
R11-MCB-CC-CCFNORM_3_7	3.18E-05	5.75E-07	1.02	CCF of two components: R11-MCB-CC-A3RATAY & R11-MCB-CC-B3RATBY
R11-MCB-CC-CCFNORM_3_8	3.18E-05	5.75E-07	1.02	CCF of two components: R11-MCB-CC-A3RATAY & R11-MCB-CC-B3UATBY

Table 13.7-4

Results - Internal Flooding At-Power Importance Measure Report

F-V and RAW Importance Measures Report (F-V = Fussell-Vesely Importance Measure; RAW = Risk Achievement Worth Importance Measure) Flooding At-Power Core Damage Frequency = 6.95E-09				
Event Name	**Probability**	**Fus Ves**	**RAW**	**Description**
R11-MCB-CC-CCFNORM_4_7	3.18E-05	5.75E-07	1.02	CCF of two components: R11-MCB-CC-A3UATAY & R11-MCB-CC-B3RATBY
R11-MCB-CC-CCFNORM_4_8	3.18E-05	5.75E-07	1.02	CCF of two components: R11-MCB-CC-A3UATAY & R11-MCB-CC-B3UATBY
R11-MCB-CC-CCFNORM_ALL	2.00E-04	1.12E-05	1.06	CCF of all components in group 'R11-MCB-CC-CCFNORM'
R11-MCB-CO-A3UATAY	1.44E-05	7.92E-06	1.54	MEDIUM VOLTAGE CIRCUIT BREAKER FOR UAT A Y-WINDING OPENS SPURIOUSLY
R11-MCB-CO-B3UATBY	1.44E-05	7.16E-06	1.49	MEDIUM VOLTAGE CIRCUIT BREAKER FOR UAT B Y-WINDING OPENS SPURIOUSLY
R11-MCB-OO-A3DGA	2.40E-03	3.05E-05	1.01	MEDIUM VOLTAGE CIRCUIT BREAKER FOR DG-A FAILS TO CLOSE
R11-MCB-OO-B3DGA	2.40E-03	2.98E-05	1.01	MEDIUM VOLTAGE CIRCUIT BREAKER FOR DG-B FAILS TO CLOSE
R11-MCB-OO-CCFALT_3_7	1.91E-05	3.83E-07	1.02	CCF of two components: R11-MCB-OO-A3DGA & R11-MCB-OO-B3DGA
R11-MCB-OO-CCFALT_ALL	1.20E-04	5.97E-06	1.05	CCF of all components in group 'R11-MCB-OO-CCFALT'
R11-RE_-FO-CCFUV_ALL	4.38E-05	8.31E-07	1.02	CCF of all components in group 'R11-RE_-FO-CCFUV'
R11-RE_-FO-UV00A3	8.75E-04	6.61E-06	1.01	1000A3 UV RELAY FAILS TO OPERATE ON UV COND
R11-RE_-FO-UV00B3	8.75E-04	6.07E-06	1.01	1000B3 UV RELAY FAILS TO OPERATE ON UV COND
R12-BAC-LP-A2-02A	4.80E-06	1.53E-06	1.31	480 VAC BUS A2-02A FAILS DURING OPERATION
R12-BAC-LP-B2-02B	4.80E-06	1.53E-06	1.31	480 VAC BUS B2-02B FAILS DURING OPERATION
R12-BAC-LP-TB1-A	4.80E-06	1.34E-06	1.28	480 VAC TURBINE BLDG POWER CENTER 1-A FAILS DURING OPERATION

Table 13.7-4

Results - Internal Flooding At-Power Importance Measure Report

F-V and RAW Importance Measures Report (F-V = Fussell-Vesely Importance Measure; RAW = Risk Achievement Worth Importance Measure) Flooding At-Power Core Damage Frequency = 6.95E-09				
Event Name	**Probability**	**Fus Ves**	**RAW**	**Description**
R12-BAC-LP-TB1-B	4.80E-06	1.34E-06	1.28	480 VAC TURBINE BLDG POWER CENTER 1-B FAILS DURING OPERATION
R12-BAC-TM-A2-02A	4.80E-06	1.53E-06	1.31	480 VAC BUS A2-02A IN MAINTENANCE
R12-BAC-TM-B2-02B	4.80E-06	1.53E-06	1.31	480 VAC BUS B2-02B IN MAINTENANCE
R12-BAC-TM-TB1-A	4.80E-06	1.34E-06	1.28	480 VAC TURBINE BLDG POWER CENTER 1-A IN MAINTENANCE
R12-BAC-TM-TB1-B	4.80E-06	1.34E-06	1.28	480 VAC TURBINE BLDG POWER CENTER 1-B IN MAINTENANCE
R12-LCB-CO-BO14A	1.20E-05	6.61E-06	1.54	R12-TB1-A XMFR OUTPUT CIRCUIT BREAKER TO BUS R12-TB1-A OPEN SPURIOUSLY
R12-LCB-CO-BO14B	1.20E-05	5.97E-06	1.49	R12-TB1-B XMFR OUTPUT CIRCUIT BREAKER TO BUS R12-TB1-B OPEN SPURIOUSLY
R12-LCB-CO-BOA2-02A	1.20E-05	4.57E-06	1.38	R12-A2-02A XMFR OUTPUT CIRCUIT BREAKER TO BUS R12-A2-02A OPEN SPURIOUSLY
R12-LCB-CO-BOB2-02B	1.20E-05	4.57E-06	1.38	R12-B2-02B XMFR OUTPUT CIRCUIT BREAKER TO BUS R12-B2-02B OPEN SPURIOUSLY
R12-MCB-CO-BI14A	1.44E-05	8.08E-06	1.55	R12-TB1-A XMFR INPUT CIRCUIT BREAKER FROM PIP BUS 1000A3 OPENS SPURIOUSLY
R12-MCB-CO-BI14B	1.44E-05	7.16E-06	1.49	R12-TB1-B XMFR INPUT CIRCUIT BREAKER FROM PIP BUS 1000B3 OPENS SPURIOUSLY
R12-MCB-CO-BIA2-02A	1.44E-05	5.49E-06	1.38	R12-A2-02A XMFR INPUT CIRCUIT BREAKER FROM PIP BUS 1000A3 OPENS SPURIOUSLY
R12-MCB-CO-BIB2-02B	1.44E-05	5.49E-06	1.38	R12-B2-02B XMFR INPUT CIRCUIT BREAKER FROM PIP BUS 1000B3 OPENS SPURIOUSLY

Table 13.7-4

Results - Internal Flooding At-Power Importance Measure Report

F-V and RAW Importance Measures Report

(F-V = Fussell-Vesely Importance Measure; RAW = Risk Achievement Worth Importance Measure)

Flooding At-Power

Core Damage Frequency = 6.95E-09

Event Name	Probability	Fus Ves	RAW	Description
R12-XFL-LP-X014A	1.92E-05	1.06E-05	1.55	R12-TB1-A XMFR FROM PIP BUS 1000A3 FAILS TO OPERATE
R12-XFL-LP-X014B	1.92E-05	9.46E-06	1.49	R12-TB1-B XMFR FROM PIP BUS 1000B3 FAILS TO OPERATE
R12-XFL-LP-XA2-02A	1.92E-05	7.35E-06	1.38	R12-A2-02A XMFR FROM PIP BUS 1000A3 FAILS TO OPERATE
R12-XFL-LP-XB2-02B	1.92E-05	7.35E-06	1.38	R12-B2-02B XMFR FROM PIP BUS 1000B3 FAILS TO OPERATE
R13-BAC-LP-R13C	4.80E-06	6.27E-05	14	BUS R13-C FAILS DURING OPERATION
R13-BAC-LP-R13CBC	4.80E-06	6.27E-05	14	R13 CONTROL BLDG LOAD GROUP C FAILS DURING OPERATION
R13-BAC-LP-R13RBC	4.80E-06	6.27E-05	14	R13 REACTOR BLDG LOAD GROUP C FAILS DURING OPERATION
R13-BAC-LP-R13TBC	4.80E-06	5.75E-07	1.12	R13 TURBINE/SWGR BLDG LOAD GROUP C FAILS DURING OPERATION
R13-DIO-FC-R16CR13C	3.43E-05	4.77E-04	14.86	DIODE FROM R16-C FAILS TO OPERATE
R13-INV-FC-CCFNSR_1_2_5	2.11E-07	1.95E-06	10.1	CCF of three components: R13-INV-FC-R13A1 & R13-INV-FC-R13A2 & R13-INV-FC-R13C
R13-INV-FC-CCFNSR_1_3	3.16E-06	1.82E-06	1.56	CCF of two components: R13-INV-FC-R13A1 & R13-INV-FC-R13B1
R13-INV-FC-CCFNSR_1_3_5	2.11E-07	6.83E-05	323.41	CCF of three components: R13-INV-FC-R13A1 & R13-INV-FC-R13B1 & R13-INV-FC-R13C
R13-INV-FC-CCFNSR_1_4_5	2.11E-07	1.95E-06	10.1	CCF of three components: R13-INV-FC-R13A1 & R13-INV-FC-R13B2 & R13-INV-FC-R13C
R13-INV-FC-CCFNSR_1_5	3.16E-06	4.04E-05	13.68	CCF of two components: R13-INV-FC-R13A1 & R13-INV-FC-R13C
R13-INV-FC-CCFNSR_2_3_5	2.11E-07	1.95E-06	10.1	CCF of three components: R13-INV-FC-R13A2 & R13-INV-FC-R13B1 & R13-INV-FC-R13C
R13-INV-FC-CCFNSR_2_4	3.16E-06	1.60E-07	1.05	CCF of two components: R13-INV-FC-R13A2 & R13-INV-FC-R13B2

Table 13.7-4

Results - Internal Flooding At-Power Importance Measure Report

F-V and RAW Importance Measures Report

(F-V = Fussell-Vesely Importance Measure; RAW = Risk Achievement Worth Importance Measure)

Flooding At-Power

Core Damage Frequency = 6.95E-09

Event Name	Probability	Fus Ves	RAW	Description
R13-INV-FC-CCFNSR_2_4_5	2.11E-07	1.95E-06	10.1	CCF of three components: R13-INV-FC-R13A2 & R13-INV-FC-R13B2 & R13-INV-FC-R13C
R13-INV-FC-CCFNSR_2_5	3.16E-06	4.04E-05	13.68	CCF of two components: R13-INV-FC-R13A2 & R13-INV-FC-R13C
R13-INV-FC-CCFNSR_3_4_5	2.11E-07	1.95E-06	10.1	CCF of three components: R13-INV-FC-R13B1 & R13-INV-FC-R13B2 & R13-INV-FC-R13C
R13-INV-FC-CCFNSR_3_5	3.16E-06	4.04E-05	13.68	CCF of two components: R13-INV-FC-R13B1 & R13-INV-FC-R13C
R13-INV-FC-CCFNSR_4_5	3.16E-06	4.04E-05	13.68	CCF of two components: R13-INV-FC-R13B2 & R13-INV-FC-R13C
R13-INV-FC-CCFNSR_ALL	1.14E-05	4.31E-03	379.49	CCF of all components in group 'R13-INV-FC-CCFNSR'
R13-INV-FC-CCFSR_ALL	1.14E-05	3.17E-03	279.2	CCF of all components in group 'R13-INV-FC-CCFSR'
R13-INV-FC-R13C	4.80E-04	6.93E-03	15.41	INVERTER TO R13-C FAILS
R13-LCB-CO-FR13CBC	1.20E-05	1.61E-04	14.39	CIRCUIT BREAKER 1 TO R13-CBC OPENS SPURIOUSLY
R13-LCB-CO-FR13RBC	1.20E-05	1.61E-04	14.39	CIRCUIT BREAKER 1 TO R13-RBC OPENS SPURIOUSLY
R13-LCB-CO-FR13TBC	1.20E-05	1.41E-06	1.12	CIRCUIT BREAKER 1 TO R13-TBC OPENS SPURIOUSLY
R13-LCB-CO-R13CBC	1.20E-05	1.61E-04	14.39	CIRCUIT BREAKER 2 TO R13-CBC OPENS SPURIOUSLY
R13-LCB-CO-R13RBC	1.20E-05	1.61E-04	14.39	CIRCUIT BREAKER 2 TO R13-RBC OPENS SPURIOUSLY
R13-LCB-CO-R13TBC	1.20E-05	1.41E-06	1.12	CIRCUIT BREAKER 2 TO R13-TBC OPENS SPURIOUSLY
R13-LCB-CO-R16CR13C	1.20E-05	1.61E-04	14.39	CIRCUIT BREAKER FROM R16-C OPENS SPURIOUSLY
R13-LCB-CO-TOR13C	1.20E-05	1.61E-04	14.39	CIRCUIT BREAKER TO R13-C OPENS SPURIOUSLY
R13-MTS-CO-R13C	2.40E-05	3.31E-04	14.74	MAINTENANCE TRANSFER SWITCH FOR R13-C SPURIOUSLY OPENS
R13-SXS-CO-R13C	2.40E-05	3.31E-04	14.74	STATIC SWITCH FOR R13-C SPURIOUSLY OPENS

Table 13.7-4

Results - Internal Flooding At-Power Importance Measure Report

F-V and RAW Importance Measures Report

(F-V = Fussell-Vesely Importance Measure; RAW = Risk Achievement Worth Importance Measure)

Flooding At-Power

Core Damage Frequency = 6.95E-09

Event Name	Probability	Fus Ves	RAW	Description
R13-SXS-FT-CCFNSR_ALL	1.20E-06	3.83E-07	1.29	CCF of all components in group 'R13-SXS-FT-CCFNSR'
R13-XFL-LP-CCFNSR2_1_2	5.05E-08	1.53E-06	30.71	CCF of two components: R13-XFL-LP-R13CBA & R13-XFL-LP-R13CBB
R13-XFL-LP-CCFNSR2_1_2_3	1.12E-09	6.96E-06	6.19E+03	CCF of three components: R13-XFL-LP-R13CBA & R13-XFL-LP-R13CBB & R13-XFL-LP-R13C
R13-XFL-LP-CCFNSR2_1_3	5.05E-08	2.56E-07	5.74	CCF of two components: R13-XFL-LP-R13CBA & R13-XFL-LP-R13CBC
R13-XFL-LP-CCFNSR2_1_8	5.05E-08	2.56E-07	5.74	CCF of two components: R13-XFL-LP-R13CBA & R13-XFL-LP-R13RBC
R13-XFL-LP-CCFNSR2_2_3	5.05E-08	2.56E-07	5.74	CCF of two components: R13-XFL-LP-R13CBB & R13-XFL-LP-R13CBC
R13-XFL-LP-CCFNSR2_2_8	5.05E-08	2.56E-07	5.74	CCF of two components: R13-XFL-LP-R13CBB & R13-XFL-LP-R13RBC
R13-XFL-LP-CCFNSR2_3_10	5.05E-08	2.56E-07	5.74	CCF of two components: R13-XFL-LP-R13CBC & R13-XFL-LP-R13TBB
R13-XFL-LP-CCFNSR2_3_11	5.05E-08	2.56E-07	5.74	CCF of two components: R13-XFL-LP-R13CBC & R13-XFL-LP-R13TBC
R13-XFL-LP-CCFNSR2_3_4	5.05E-08	2.56E-07	5.74	CCF of two components: R13-XFL-LP-R13CBC & R13-XFL-LP-R13CPA
R13-XFL-LP-CCFNSR2_3_5	5.05E-08	2.56E-07	5.74	CCF of two components: R13-XFL-LP-R13CBC & R13-XFL-LP-R13CPB
R13-XFL-LP-CCFNSR2_3_6	5.05E-08	2.56E-07	5.74	CCF of two components: R13-XFL-LP-R13CBC & R13-XFL-LP-R13RBA
R13-XFL-LP-CCFNSR2_3_7	5.05E-08	2.56E-07	5.74	CCF of two components: R13-XFL-LP-R13CBC & R13-XFL-LP-R13RBB
R13-XFL-LP-CCFNSR2_3_8	5.05E-08	2.56E-07	5.74	CCF of two components: R13-XFL-LP-R13CBC & R13-XFL-LP-R13RBC
R13-XFL-LP-CCFNSR2_3_9	5.05E-08	2.56E-07	5.74	CCF of two components: R13-XFL-LP-R13CBC & R13-XFL-LP-R13TBA
R13-XFL-LP-CCFNSR2_4_8	5.05E-08	2.56E-07	5.74	CCF of two components: R13-XFL-LP-R13CPA & R13-XFL-LP-R13RBC
R13-XFL-LP-CCFNSR2_5_8	5.05E-08	2.56E-07	5.74	CCF of two components: R13-XFL-LP-R13CPB & R13-XFL-LP-R13RBC
R13-XFL-LP-CCFNSR2_6_7	5.05E-08	1.53E-06	30.71	CCF of two components: R13-XFL-LP-R13RBA & R13-XFL-LP-R13RBB

Table 13.7-4

Results - Internal Flooding At-Power Importance Measure Report

F-V and RAW Importance Measures Report (F-V = Fussell-Vesely Importance Measure; RAW = Risk Achievement Worth Importance Measure) Flooding At-Power Core Damage Frequency = 6.95E-09				
Event Name	**Probability**	**Fus Ves**	**RAW**	**Description**
R13-XFL-LP-CCFNSR2_6_8	5.05E-08	2.56E-07	5.74	CCF of two components: R13-XFL-LP-R13RBA & R13-XFL-LP-R13RBC
R13-XFL-LP-CCFNSR2_7_8	5.05E-08	2.56E-07	5.74	CCF of two components: R13-XFL-LP-R13RBB & R13-XFL-LP-R13RBC
R13-XFL-LP-CCFNSR2_8_10	5.05E-08	2.56E-07	5.74	CCF of two components: R13-XFL-LP-R13RBC & R13-XFL-LP-R13TBB
R13-XFL-LP-CCFNSR2_8_11	5.05E-08	2.56E-07	5.74	CCF of two components: R13-XFL-LP-R13RBC & R13-XFL-LP-R13TBC
R13-XFL-LP-CCFNSR2_8_9	5.05E-08	2.56E-07	5.74	CCF of two components: R13-XFL-LP-R13RBC & R13-XFL-LP-R13TBA
R13-XFL-LP-CCFNSR2_ALL	4.55E-07	3.56E-03	7.83E+03	CCF of all components in group 'R13-XFL-LP-CCFNSR2'
R13-SXS-FT-CCFNSR_ALL	1.20E-06	3.83E-07	1.29	CCF of all components in group 'R13-SXS-FT-CCFNSR'
R13-XFL-LP-R13CBC	1.92E-05	2.63E-04	14.64	TRANSFORMER FOR R13-CBC FAILS DURING OPERATION
R13-XFL-LP-R13RBC	1.92E-05	2.63E-04	14.64	TRANSFORMER FOR R13-RBC FAILS DURING OPERATION
R13-XFL-LP-R13TBC	1.92E-05	2.49E-06	1.13	TRANSFORMER FOR R13-TBC FAILS DURING OPERATION
R13-XHE-FO-ADG	1.61E-02	9.01E-03	1.55	OPERATOR FAILS TO ALIGN THE ADG BUSES TO UPS BUSES
R16-BDC-LP-R16A3	4.80E-06	1.53E-06	1.31	DC BUS R16-A3 FAILS DURING OPERATION
R16-BDC-LP-R16C	4.80E-06	6.27E-05	14	DC BUS R16-C FAILS DURING OPERATION
R16-BDC-TM-R16A3	5.00E-04	8.70E-04	2.73	DC BUS R16-A3 IN MAINTENANCE
R16-BDC-TM-R16B3	5.00E-04	3.16E-06	1.01	DC BUS R16-B3 IN MAINTENANCE
R16-BDC-TM-R16C	5.00E-04	7.22E-03	15.42	DC BUS R16-C IN MAINTENANCE
R16-BT_-LP-CCFNSR_1_3_5	1.51E-08	2.88E-06	189.53	CCF of three components: R16-BT_-LP-R16BTA1 & R16-BT_-LP-R16BTB1 & R16-BT_-LP-R1
R16-BT_-LP-CCFNSR_1_5	3.00E-07	2.75E-06	10.1	CCF of two components: R16-BT_-LP-R16BTA1 & R16-BT_-LP-R16BTC

Table 13.7-4

Results - Internal Flooding At-Power Importance Measure Report

F-V and RAW Importance Measures Report (F-V = Fussell-Vesely Importance Measure; RAW = Risk Achievement Worth Importance Measure) Flooding At-Power Core Damage Frequency = 6.95E-09				
Event Name	**Probability**	**Fus Ves**	**RAW**	**Description**
R16-BT_-LP-CCFNSR_2_5	3.00E-07	2.75E-06	10.1	CCF of two components: R16-BT_-LP-R16BTA2 & R16-BT_-LP-R16BTC
R16-BT_-LP-CCFNSR_3_5	3.00E-07	2.75E-06	10.1	CCF of two components: R16-BT_-LP-R16BTB1 & R16-BT_-LP-R16BTC
R16-BT_-LP-CCFNSR_4_5	3.00E-07	2.75E-06	10.1	CCF of two components: R16-BT_-LP-R16BTB2 & R16-BT_-LP-R16BTC
R16-BT_-LP-CCFNSR_ALL	8.14E-07	2.84E-04	348.38	CCF of all components in group 'R16-BT_-LP-CCFNSR'
R16-BT_-LP-CCFSR_ALL	8.14E-07	1.84E-04	225.37	CCF of all components in group 'R16-BT_-LP-CCFSR'
R16-BT_-LP-R16BTA3	4.80E-05	6.46E-05	2.34	BATTERY R16-BTA3 FAILS TO PROVIDE OUTPUT
R16-BT_-LP-R16BTC	4.80E-05	6.71E-04	14.95	BATTERY R16-BTC FAILS TO PROVIDE OUTPUT
R16-BT_-TM-R16BTA3	5.00E-04	8.70E-04	2.73	BATTERY R16-BTA3 IN TEST AND MAINTENANCE
R16-BT_-TM-R16BTB3	5.00E-04	3.16E-06	1.01	BATTERY R16-BTB3 IN TEST AND MAINTENANCE
R16-BT_-TM-R16BTC	5.00E-04	7.22E-03	15.42	BATTERY R16-BTC IN TEST AND MAINTENANCE
R16-LCB-CO-FROMR16BTA3	1.20E-05	8.56E-06	1.7	CIRCUIT BREAKER FROM R16-BTA3 OPENS SPURIOUSLY
R16-LCB-CO-FROMR16BTC	1.20E-05	1.61E-04	14.39	CIRCUIT BREAKER FROM R16-BTC OPENS SPURIOUSLY
R16-LCB-CO-R16A3SWGR1	1.20E-05	8.56E-06	1.7	CIRCUIT BREAKER 1 FROM R16-A3 OPENS SPURIOUSLY
R16-LCB-CO-R16A3SWGR2	1.20E-05	8.56E-06	1.7	CIRCUIT BREAKER 2 FROM R16-A3 OPENS SPURIOUSLY
R21-AHU-FR-3A	2.40E-04	4.47E-07	1	AIR HANDLING UNIT FAILS TO RUN
R21-AHU-FR-3B	2.40E-04	4.47E-07	1	AIR HANDLING UNIT FAILS TO RUN
R21-AHU-FS-3A	6.00E-03	1.37E-04	1.02	AIR HANDLING UNIT FAILS TO START
R21-AHU-FS-3B	6.00E-03	1.33E-04	1.02	AIR HANDLING UNIT FAILS TO START

Table 13.7-4

Results - Internal Flooding At-Power Importance Measure Report

F-V and RAW Importance Measures Report (F-V = Fussell-Vesely Importance Measure; RAW = Risk Achievement Worth Importance Measure) Flooding At-Power Core Damage Frequency = 6.95E-09				
Event Name	**Probability**	**Fus Ves**	**RAW**	**Description**
R21-AHU-FS-AHU3_1_2	6.67E-04	8.68E-05	1.13	CCF of two components: R21-AHU-FS-3A & R21-AHU-FS-3B
R21-BV_-OC-FOADG1A	3.28E-05	9.58E-07	1.03	MANUAL VALVE PLUGS/TRANSFERS CLOSED
R21-BV_-OC-FOADG1B	3.28E-05	9.58E-07	1.03	MANUAL VALVE PLUGS/TRANSFERS CLOSED
R21-BV_-OC-FOADG2A	3.28E-05	9.58E-07	1.03	MANUAL VALVE PLUGS/TRANSFERS CLOSED
R21-BV_-OC-FOADG2B	3.28E-05	9.58E-07	1.03	MANUAL VALVE PLUGS/TRANSFERS CLOSED
R21-DG_-FR-ADG_1_2	2.95E-03	1.53E-03	1.52	CCF of two components: R21-DG_-FR-ADGA & R21-DG_-FR-ADGB
R21-DG_-FR-ADGA	5.60E-02	4.47E-03	1.08	ADG-A FAILS TO RUN
R21-DG_-FR-ADGB	5.60E-02	4.47E-03	1.08	DIESEL GENERATOR FAILS TO RUN
R21-DG_-FR-CCF_1_2	4.41E-03	7.71E-04	1.17	CCF of two components: R21-DG_-FR-DGA & R21-DG_-FR-DGB
R21-DG_-FR-DGA	5.60E-02	2.40E-03	1.04	DIESEL GENERATOR "A" FAILS TO RUN GIVEN START
R21-DG_-FR-DGB	5.60E-02	2.35E-03	1.04	DIESEL GENERATOR "B" FAILS TO RUN GIVEN START
R21-DG_-FS-ADG_1_2	1.56E-03	7.90E-04	1.51	CCF of two components: R21-DG_-FS-ADGA & R21-DG_-FS-ADGB
R21-DG_-FS-ADGA	1.40E-02	1.05E-03	1.07	DIESEL GENERATOR FAILS TO START AND LOAD
R21-DG_-FS-ADGB	1.40E-02	1.05E-03	1.07	DIESEL GENERATOR FAILS TO START AND LOAD
R21-DG_-FS-CCF_1_2	2.86E-04	2.92E-05	1.1	CCF of two components: R21-DG_-FS-DGA & R21-DG_-FS-DGB
R21-DG_-FS-DGA	1.40E-02	4.38E-04	1.03	DG-A FAILS TO START AND LOAD
R21-DG_-FS-DGB	1.40E-02	4.27E-04	1.03	DG-B FAILS TO START AND LOAD
R21-DG_-TM-ADGA	4.60E-02	2.52E-03	1.05	ANCILLARY DG-A IN MAINTENANCE
R21-DG_-TM-ADGB	4.60E-02	2.52E-03	1.05	ANCILLARY DG-B IN MAINTENANCE

Table 13.7-4

Results - Internal Flooding At-Power Importance Measure Report

F-V and RAW Importance Measures Report (F-V = Fussell-Vesely Importance Measure; RAW = Risk Achievement Worth Importance Measure) Flooding At-Power Core Damage Frequency = 6.95E-09				
Event Name	**Probability**	**Fus Ves**	**RAW**	**Description**
R21-DG_-TM-DGA	4.60E-02	1.57E-03	1.03	STANDBY DIESEL GENERATOR "A" IN MAINTENANCE
R21-DG_-TM-DGB	4.60E-02	1.53E-03	1.03	STANDBY DIESEL GENERATOR "B" IN MAINTENANCE
R21-FAN-FR-ADG_1_2	1.26E-05	5.11E-06	1.4	CCF of two components: R21-FAN-FR-ADGA & R21-FAN-FR-ADGB
R21-FAN-FR-ADGA	2.40E-04	1.36E-05	1.06	BLOWER/VENTILATION FAN FAILS TO RUN
R21-FAN-FR-ADGB	2.40E-04	1.36E-05	1.06	BLOWER/VENTILATION FAN FAILS TO RUN
R21-FAN-FR-AHU2A	2.40E-04	4.47E-07	1	DG-A NORMAL VENTILATION FAN FAILS TO RUN
R21-FAN-FR-AHU2B	2.40E-04	4.47E-07	1	DG-B NORMAL VENTILATION FAN FAILS TO RUN
R21-FAN-FS-ADG_1_2	6.67E-05	2.98E-05	1.44	CCF of two components: R21-FAN-FS-ADGA & R21-FAN-FS-ADGB
R21-FAN-FS-ADGA	6.00E-04	3.72E-05	1.06	BLOWER/VENTILATION FAN FAILS TO START
R21-FAN-FS-ADGB	6.00E-04	3.72E-05	1.06	BLOWER/VENTILATION FAN FAILS TO START
R21-FAN-FS-AHU2_1_2	6.67E-05	2.94E-06	1.04	CCF of two components: R21-FAN-FS-AHU2A & R21-FAN-FS-AHU2B
R21-FAN-FS-AHU2A	6.00E-04	2.91E-06	1	DG-A NORMAL VENTILATION FAN FAILS TO RESTART
R21-FAN-FS-AHU2B	6.00E-04	2.91E-06	1	DG-B NORMAL VENTILATION FAN FAILS TO RESTART
R21-FAN-FS-ROOF_ALL	3.00E-05	1.21E-06	1.04	CCF of all components in group 'R21-FAN-FS-ROOF'
R21-FLT-PG-ADGA	1.08E-02	8.04E-04	1.07	FILTER PLUGGED
R21-FLT-PG-ADGB	1.08E-02	8.04E-04	1.07	FILTER PLUGGED
R21-FLT-PG-DGA	1.08E-02	3.17E-04	1.03	FILTER PLUGGED
R21-FLT-PG-DGB	1.08E-02	3.10E-04	1.03	FILTER PLUGGED
R21-MCB-CC-1LOAD1	5.00E-04	1.88E-06	1	CIRCUIT BREAKER TO LOAD 1 FAILS TO OPEN

Table 13.7-4

Results - Internal Flooding At-Power Importance Measure Report

F-V and RAW Importance Measures Report (F-V = Fussell-Vesely Importance Measure; RAW = Risk Achievement Worth Importance Measure) Flooding At-Power Core Damage Frequency = 6.95E-09				
Event Name	**Probability**	**Fus Ves**	**RAW**	**Description**
R21-MCB-CC-1LOAD2	5.00E-04	1.88E-06	1	CIRCUIT BREAKER TO LOAD 2 FAILS TO OPEN
R21-MCB-CC-1LOAD3	5.00E-04	1.88E-06	1	CIRCUIT BREAKER TO LOAD 3 FAILS TO OPEN
R21-MCB-CC-1LOAD4	5.00E-04	1.88E-06	1	CIRCUIT BREAKER TO LOAD 4 FAILS TO OPEN
R21-MCB-CC-1LOAD5	5.00E-04	1.88E-06	1	CIRCUIT BREAKER TO LOAD 5 FAILS TO OPEN
R21-MCB-CC-2LOAD1	5.00E-04	1.88E-06	1	CIRCUIT BREAKER TO LOAD 1 FAILS TO OPEN
R21-MCB-CC-2LOAD2	5.00E-04	1.88E-06	1	CIRCUIT BREAKER TO LOAD 2 FAILS TO OPEN
R21-MCB-CC-2LOAD3	5.00E-04	1.88E-06	1	CIRCUIT BREAKER TO LOAD 3 FAILS TO OPEN
R21-MCB-CC-2LOAD4	5.00E-04	1.88E-06	1	CIRCUIT BREAKER TO LOAD 4 FAILS TO OPEN
R21-MCB-CC-2LOAD5	5.00E-04	1.88E-06	1	CIRCUIT BREAKER TO LOAD 5 FAILS TO OPEN
R21-MCB-CC-CCFLS_1_2	5.56E-05	2.56E-06	1.04	CCF of two components: R21-MCB-CC-1LOAD1 & R21-MCB-CC-2LOAD1
R21-MOD-CC-1A	3.00E-03	5.15E-05	1.02	MOTOR-OPERATED DAMPER FAILS TO OPEN
R21-MOD-CC-1B	3.00E-03	5.01E-05	1.02	MOTOR-OPERATED DAMPER FAILS TO OPEN
R21-MOD-CC-2A	3.00E-03	5.15E-05	1.02	MOTOR-OPERATED DAMPER FAILS TO OPEN
R21-MOD-CC-2B	3.00E-03	5.01E-05	1.02	MOTOR-OPERATED DAMPER FAILS TO OPEN
R21-MOD-CC-3A	3.00E-03	5.15E-05	1.02	MOTOR-OPERATED DAMPER FAILS TO OPEN
R21-MOD-CC-3B	3.00E-03	5.01E-05	1.02	MOTOR-OPERATED DAMPER FAILS TO OPEN
R21-MOD-CC-EXH_ALL	1.50E-04	1.13E-05	1.07	CCF of all components in group 'R21-MOD-CC-EXH'
R21-MOD-CC-INL_1_2	3.33E-05	1.28E-06	1.04	CCF of two components: R21-MOD-CC-1A & R21-MOD-CC-1B
R21-MOD-CC-INL_1_4	3.33E-05	1.28E-06	1.04	CCF of two components: R21-MOD-CC-1A & R21-MOD-CC-2B

Table 13.7-4

Results - Internal Flooding At-Power Importance Measure Report

F-V and RAW Importance Measures Report

(F-V = Fussell-Vesely Importance Measure; RAW = Risk Achievement Worth Importance Measure)

Flooding At-Power

Core Damage Frequency = 6.95E-09

Event Name	Probability	Fus Ves	RAW	Description
R21-MOD-CC-INL_1_6	3.33E-05	1.28E-06	1.04	CCF of two components: R21-MOD-CC-1A & R21-MOD-CC-3B
R21-MOD-CC-INL_2_3	3.33E-05	1.28E-06	1.04	CCF of two components: R21-MOD-CC-1B & R21-MOD-CC-2A
R21-MOD-CC-INL_2_5	3.33E-05	1.28E-06	1.04	CCF of two components: R21-MOD-CC-1B & R21-MOD-CC-3A
R21-MOD-CC-INL_3_4	3.33E-05	1.28E-06	1.04	CCF of two components: R21-MOD-CC-2A & R21-MOD-CC-2B
R21-MOD-CC-INL_3_6	3.33E-05	1.28E-06	1.04	CCF of two components: R21-MOD-CC-2A & R21-MOD-CC-3B
R21-MOD-CC-INL_4_5	3.33E-05	1.28E-06	1.04	CCF of two components: R21-MOD-CC-2B & R21-MOD-CC-3A
R21-MOD-CC-INL_5_6	3.33E-05	1.28E-06	1.04	CCF of two components: R21-MOD-CC-3A & R21-MOD-CC-3B
R21-MOD-CC-INL_ALL	1.50E-04	1.13E-05	1.07	CCF of all components in group 'R21-MOD-CC-INL'
R21-MP_-FR-ADG_1_2	3.16E-05	1.32E-05	1.42	CCF of two components: R21-MP_-FR-FOADGA & R21-MP_-FR-FOADGB
R21-MP_-FR-FOADGA	6.00E-04	3.72E-05	1.06	MOTOR-DRIVEN PUMP (ALL TYPES) FAILS TO RUN
R21-MP_-FR-FOADGB	6.00E-04	3.72E-05	1.06	MOTOR-DRIVEN PUMP (ALL TYPES) FAILS TO RUN
R21-MP_-FS-ADG_1_2	2.22E-04	1.04E-04	1.47	CCF of two components: R21-MP_-FS-FOADGA & R21-MP_-FS-FOADGB
R21-MP_-FS-FOADGA	2.00E-03	1.37E-04	1.07	MOTOR-DRIVEN PUMP (ALL TYPES) FAILS TO START
R21-MP_-FS-FOADGB	2.00E-03	1.37E-04	1.07	MOTOR-DRIVEN PUMP (ALL TYPES) FAILS TO START
R21-MP_-FS-FOPUMP_ALL	1.00E-04	6.84E-06	1.07	CCF of all components in group 'R21-MP_-FS-FOPUMP'
R21-NSC-TM-ANCA	1.50E-03	4.12E-04	1.27	ADG BUS A IN TEST OR MAINTENANCE
R21-NSC-TM-ANCB	1.50E-03	6.94E-05	1.05	ADG BUS B IN TEST OR MAINTENANCE
R21-RE_-FO-ADG_1_2	9.73E-05	4.37E-05	1.45	CCF of two components: R21-RE_-FO-ADGA & R21-RE_-FO-ADGB
R21-RE_-FO-ADGA	8.75E-04	5.65E-05	1.06	ADG-A UNDERVOLTAGE RELAY FAILS TO OPERATE ON DEMAND

Table 13.7-4

Results - Internal Flooding At-Power Importance Measure Report

F-V and RAW Importance Measures Report (F-V = Fussell-Vesely Importance Measure; RAW = Risk Achievement Worth Importance Measure) Flooding At-Power Core Damage Frequency = 6.95E-09				
Event Name	**Probability**	**Fus Ves**	**RAW**	**Description**
R21-RE_-FO-ADGB	8.75E-04	5.65E-05	1.06	ADG-B UNDERVOLTAGE RELAY FAILS TO OPERATE ON DEMAND
R21-TRN-RE-FOADGA	2.42E-02	1.87E-03	1.08	FAILURE TO RESTORE FUEL OIL TRANSFER TRAIN FOR ADG-A
R21-TRN-RE-FOADGB	2.42E-02	1.87E-03	1.08	FAILURE TO RESTORE FUEL OIL TRANSFER TRAIN FOR ADG-A
R21-TRN-RE-FODG1A	2.42E-02	2.88E-06	1	FAILURE TO RESTORE FUEL OIL TRANSFER TRAIN 1 FOR DG-A
R21-TRN-RE-FODG1B	2.42E-02	2.88E-06	1	FAILURE TO RESTORE FUEL OIL TRANSFER TRAIN 1 FOR DG-B
R21-TRN-RE-FODG2A	2.42E-02	2.88E-06	1	FAILURE TO RESTORE FUEL OIL TRANSFER TRAIN 2 FOR DG-A
R21-TRN-RE-FODG2B	2.42E-02	2.88E-06	1	FAILURE TO RESTORE FUEL OIL TRANSFER TRAIN 2 FOR DG-B
R21-XHE-FO-ADG	1.61E-02	9.04E-03	1.55	OPERATOR FAILS TO CONTROL THE LOADS ON ANCILLARY DG BUSES
T10-ACV-CC-F013	2.00E-03	1.47E-06	1	AOV F013 FAILS TO OPEN
T10-ACV-CC-F016	2.00E-03	1.47E-06	1	AOV F016 FAILS TO OPEN
T10-ACV-CC-VENTING_1_2	1.76E-04	0.00E+00	1	CCF of two components: T10-ACV-CC-F013 & T10-ACV-CC-F016
T10-ACV-OC-F013	2.40E-05	0.00E+00	1	ACV F013 TRANSFERS CLOSED
T10-ACV-OC-F016	2.40E-05	0.00E+00	1	ACV F016 TRANSFERS CLOSED
T10-ACV-OO-ISV1	2.00E-03	2.89E-05	1.01	AIR OPERATED VALVE FAILS TO CLOSE
T10-ACV-OO-ISV2	2.00E-03	2.89E-05	1.01	AIR OPERATED VALVE FAILS TO CLOSE
T10-ACV-OO-ISV3	2.00E-03	2.89E-05	1.01	AIR OPERATED VALVE FAILS TO CLOSE
T10-UV_-OO-FDW-F102_1_2	2.99E-05	0.00E+00	1	CCF of two components: B21-UV_-OO-F102A & B21-UV_-OO-F102B
T10-VB_-CC_1_2_3	5.56E-07	7.56E-05	136.49	CCF of three components: T10-VB_-CC-VB1 & T10-VB_-CC-VB2 & T10-VB_-CC-VB3

Table 13.7-4

Results - Internal Flooding At-Power Importance Measure Report

F-V and RAW Importance Measures Report

(F-V = Fussell-Vesely Importance Measure; RAW = Risk Achievement Worth Importance Measure)

Flooding At-Power

Core Damage Frequency = 6.95E-09

Event Name	Probability	Fus Ves	RAW	Description
T10-VB_-LK-VB1	1.00E-04	1.79E-04	2.78	PROBABILITY OF LEAK IN VACUUM BREAKER 1
T10-VB_-LK-VB2	1.00E-04	1.79E-04	2.78	PROBABILITY OF LEAK IN VACUUM BREAKER 2
T10-VB_-LK-VB3	1.00E-04	1.79E-04	2.78	PROBABILITY OF LEAK IN VACUUM BREAKER 3
T10-XHE-FO-CONTVENT	1.77E-02	6.62E-05	1	OPERATOR FAILS TO ACTUATE CONTAINMENT VENTING
T15-FLT-PP_ALL	5.68E-07	1.24E-04	216.03	CCF of all components in group 'T15-FLT-PP'
T15-HX_-PP_ALL	5.68E-08	4.92E-06	87.55	CCF of all components in group 'T15-HX_-PP'
T31-P54-SUPPLY	9.00E-01	2.80E-03	1	CIS SYSTEM NORMAL NITROGEN SUPPLY
U43-BV_CC_1_2	8.77E-07	6.39E-07	1.73	CCF of two components: U43-BV_-CC-F426A & U43-BV_-CC-F426B
U43-BV_CC_1_4	8.77E-07	6.39E-07	1.73	CCF of two components: U43-BV_-CC-F426A & U43-BV_-CC-FU435B
U43-BV_CC_2_3	8.77E-07	6.39E-07	1.73	CCF of two components: U43-BV_-CC-F426B & U43-BV_-CC-FU435A
U43-BV_CC_3_4	8.77E-07	6.39E-07	1.73	CCF of two components: U43-BV_-CC-FU435A & U43-BV_-CC-FU435B
U43-BV_CC_ALL	2.37E-06	2.17E-06	1.9	CCF of all components in group 'U43-BV_CC'
U43-EDP-FR_1_2	5.58E-04	3.58E-06	1.01	CCF of two components: U43-EDP-FR-P1A & U43-EDP-FR-P2A
U43-EDP-FR-P1A	2.37E-02	9.46E-06	1	DIESEL-DRIVEN PUMP FAILS TO RUN
U43-EDP-FR-P2A	2.37E-02	6.90E-06	1	DIESEL-DRIVEN PUMP FAILS TO RUN
U43-EDP-FS_1_2	2.22E-03	2.16E-05	1.01	CCF of two components: U43-EDP-FS-P1A & U43-EDP-FS-P2A
U43-EDP-FS-P1A	2.00E-02	7.67E-06	1	DIESEL-DRIVEN PUMP FAILS TO START
U43-EDP-FS-P2A	2.00E-02	5.62E-06	1	DIESEL-DRIVEN PUMP 2A FAILS TO START
U43-TNK-RP-T1A	3.72E-05	2.81E-06	1.08	PRIMARY TANK 1A FAILS CATASTOPHICALLY

Table 13.7-4

Results - Internal Flooding At-Power Importance Measure Report

F-V and RAW Importance Measures Report (F-V = Fussell-Vesely Importance Measure; RAW = Risk Achievement Worth Importance Measure) Flooding At-Power Core Damage Frequency = 6.95E-09				
Event Name	**Probability**	**Fus Ves**	**RAW**	**Description**
U43-UV_-CC2_1_2_3	9.18E-07	7.67E-07	1.77	CCF of three components: G21-UV_-CC-F427A & G21-UV_-CC-F427B & U43-UV_-CC-FU434A
U43-UV_-CC2_1_2_4	9.18E-07	7.67E-07	1.77	CCF of three components: G21-UV_-CC-F427A & G21-UV_-CC-F427B & U43-UV_-CC-FU434B
U43-UV_-CC2_1_3_4	9.18E-07	7.67E-07	1.77	CCF of three components: G21-UV_-CC-F427A & U43-UV_-CC-FU434A & U43-UV_-CC-FU434
U43-UV_-CC2_2_3_4	9.18E-07	7.67E-07	1.77	CCF of three components: G21-UV_-CC-F427B & U43-UV_-CC-FU434A & U43-UV_-CC-FU434
U43-UV_-CC2_ALL	1.69E-05	3.43E-05	3.01	CCF of all components in group 'U43-UV_-CC2'
U43-XHE-FO-2ND	1.61E-02	4.60E-06	1	OPERATOR FAILS TO ALIGN FPS CROSSTIE
U43-XHE-FO-LPCI	1.61E-03	3.68E-04	1.22	OPERATOR FAILS TO ACTUATE U43 IN LPCI MODE
U43-XHE-FO-MAKEUP	1.61E-02	1.20E-03	1.07	OPERATOR FAILS TO ACTUATE U43 IN MAKE UP MODE
U43-XHE-FO-PMPTRK	2.66E-02	1.24E-03	1.05	OPERATOR FAIL TO SUPPLY WATER FROM PUMP TRUCKS
XHOS72H	1.00E+00	1.71E-01	1	HOUSE EVENT: 72 HOURS (VALUE =1)
XXX-XHE-FO-DEPRESS	1.61E-01	6.08E-02	1.32	OPERATOR FAILS TO RECOGNIZE NEED OF DEPRESSURIZATION
XXX-XHE-FO-ICPCCS	1.61E-03	4.87E-03	4.01	Operator fails to recognize the need to makeup ICS/PCCS Pool level.
XXX-XHE-FO-LPMAKEUP	1.61E-01	2.72E-02	1.14	OP. FAILS TO RECOG. NEED FOR LOW PRESS. MAKEUP AFTER DEPRESSURIZATION

Table 13.7-5

Results - Internal Flooding Shutdown Importance Measure Report

F-V and RAW Importance Measures Report

(F-V = Fussell-Vesely Importance Measure; RAW = Risk Achievement Worth Importance Measure)

Flooding Shutdown

Core Damage Frequency = 5.21E-09

Event Name	Probability	Fus Ves	RAW	Description
B21-ACV-OC-F111A	2.40E-05	3.35E-04	14.85	AIR-TESTABLE CHECK VALVE F111A FAILS TO REMAIN OPEN
B21-ACV-OC-F111B	2.40E-05	1.07E-04	5.42	AIR-TESTABLE CHECK VALVE F111B FAILS TO REMAIN OPEN
B21-SQV-CC_1_2	2.38E-05	5.33E-05	3.22	CCF of two components: B21-SQV-CC-F004A & B21-SQV-CC-F004B
B21-SQV-CC_1_2_3	7.94E-07	2.19E-04	274.58	CCF of three components: B21-SQV-CC-F004A & B21-SQV-CC-F004B & B21-SQV-CC-F004C
B21-SQV-CC_1_2_4	7.94E-07	2.19E-04	274.58	CCF of three components: B21-SQV-CC-F004A & B21-SQV-CC-F004B & B21-SQV-CC-F004D
B21-SQV-CC_1_2_5	7.94E-07	2.19E-04	274.58	CCF of three components: B21-SQV-CC-F004A & B21-SQV-CC-F004B & B21-SQV-CC-F004E
B21-SQV-CC_1_2_6	7.94E-07	2.19E-04	274.58	CCF of three components: B21-SQV-CC-F004A & B21-SQV-CC-F004B & B21-SQV-CC-F004F
B21-SQV-CC_1_3	2.38E-05	5.33E-05	3.22	CCF of two components: B21-SQV-CC-F004A & B21-SQV-CC-F004C
B21-SQV-CC_1_3_4	7.94E-07	2.19E-04	274.58	CCF of three components: B21-SQV-CC-F004A & B21-SQV-CC-F004C & B21-SQV-CC-F004D
B21-SQV-CC_1_3_5	7.94E-07	2.19E-04	274.58	CCF of three components: B21-SQV-CC-F004A & B21-SQV-CC-F004C & B21-SQV-CC-F004E
B21-SQV-CC_1_3_6	7.94E-07	2.19E-04	274.58	CCF of three components: B21-SQV-CC-F004A & B21-SQV-CC-F004C & B21-SQV-CC-F004F
B21-SQV-CC_1_4	2.38E-05	5.33E-05	3.22	CCF of two components: B21-SQV-CC-F004A & B21-SQV-CC-F004D
B21-SQV-CC_1_4_5	7.94E-07	2.19E-04	274.58	CCF of three components: B21-SQV-CC-F004A & B21-SQV-CC-F004D & B21-SQV-CC-F004E

Table 13.7-5

Results - Internal Flooding Shutdown Importance Measure Report

F-V and RAW Importance Measures Report **(F-V = Fussell-Vesely Importance Measure; RAW = Risk Achievement Worth Importance Measure)** **Flooding Shutdown** **Core Damage Frequency = 5.21E-09**				
Event Name	**Probability**	**Fus Ves**	**RAW**	**Description**
B21-SQV-CC_1_4_6	7.94E-07	2.19E-04	274.58	CCF of three components: B21-SQV-CC-F004A & B21-SQV-CC-F004D & B21-SQV-CC-F004F
B21-SQV-CC_1_5	2.38E-05	5.33E-05	3.22	CCF of two components: B21-SQV-CC-F004A & B21-SQV-CC-F004E
B21-SQV-CC_1_5_6	7.94E-07	2.19E-04	274.58	CCF of three components: B21-SQV-CC-F004A & B21-SQV-CC-F004E & B21-SQV-CC-F004F
B21-SQV-CC_1_6	2.38E-05	5.33E-05	3.22	CCF of two components: B21-SQV-CC-F004A & B21-SQV-CC-F004F
B21-SQV-CC_2_3	2.38E-05	5.33E-05	3.22	CCF of two components: B21-SQV-CC-F004B & B21-SQV-CC-F004C
B21-SQV-CC_2_3_4	7.94E-07	2.19E-04	274.58	CCF of three components: B21-SQV-CC-F004B & B21-SQV-CC-F004C & B21-SQV-CC-F004D
B21-SQV-CC_2_3_5	7.94E-07	2.19E-04	274.58	CCF of three components: B21-SQV-CC-F004B & B21-SQV-CC-F004C & B21-SQV-CC-F004E
B21-SQV-CC_2_3_6	7.94E-07	2.19E-04	274.58	CCF of three components: B21-SQV-CC-F004B & B21-SQV-CC-F004C & B21-SQV-CC-F004F
B21-SQV-CC_2_4	2.38E-05	5.33E-05	3.22	CCF of two components: B21-SQV-CC-F004B & B21-SQV-CC-F004D
B21-SQV-CC_2_4_5	7.94E-07	2.19E-04	274.58	CCF of three components: B21-SQV-CC-F004B & B21-SQV-CC-F004D & B21-SQV-CC-F004E
B21-SQV-CC_2_4_6	7.94E-07	2.19E-04	274.58	CCF of three components: B21-SQV-CC-F004B & B21-SQV-CC-F004D & B21-SQV-CC-F004F
B21-SQV-CC_2_5	2.38E-05	5.33E-05	3.22	CCF of two components: B21-SQV-CC-F004B & B21-SQV-CC-F004E
B21-SQV-CC_2_5_6	7.94E-07	2.19E-04	274.58	CCF of three components: B21-SQV-CC-F004B & B21-SQV-CC-F004E & B21-SQV-CC-F004F
B21-SQV-CC_2_6	2.38E-05	5.33E-05	3.22	CCF of two components: B21-SQV-CC-F004B & B21-SQV-CC-F004F

Table 13.7-5

Results - Internal Flooding Shutdown Importance Measure Report

F-V and RAW Importance Measures Report

(F-V = Fussell-Vesely Importance Measure; RAW = Risk Achievement Worth Importance Measure)

Flooding Shutdown

Core Damage Frequency = 5.21E-09

Event Name	Probability	Fus Ves	RAW	Description
B21-SQV-CC_3_4	2.38E-05	5.33E-05	3.22	CCF of two components: B21-SQV-CC-F004C & B21-SQV-CC-F004D
B21-SQV-CC_3_4_5	7.94E-07	2.19E-04	274.58	CCF of three components: B21-SQV-CC-F004C & B21-SQV-CC-F004D & B21-SQV-CC-F004E
B21-SQV-CC_3_4_6	7.94E-07	2.19E-04	274.58	CCF of three components: B21-SQV-CC-F004C & B21-SQV-CC-F004D & B21-SQV-CC-F004F
B21-SQV-CC_3_5	2.38E-05	5.33E-05	3.22	CCF of two components: B21-SQV-CC-F004C & B21-SQV-CC-F004E
B21-SQV-CC_3_5_6	7.94E-07	2.19E-04	274.58	CCF of three components: B21-SQV-CC-F004C & B21-SQV-CC-F004E & B21-SQV-CC-F004F
B21-SQV-CC_3_6	2.38E-05	5.33E-05	3.22	CCF of two components: B21-SQV-CC-F004C & B21-SQV-CC-F004F
B21-SQV-CC_4_5	2.38E-05	5.33E-05	3.22	CCF of two components: B21-SQV-CC-F004D & B21-SQV-CC-F004E
B21-SQV-CC_4_5_6	7.94E-07	2.19E-04	274.58	CCF of three components: B21-SQV-CC-F004D & B21-SQV-CC-F004E & B21-SQV-CC-F004F
B21-SQV-CC_4_6	2.38E-05	5.33E-05	3.22	CCF of two components: B21-SQV-CC-F004D & B21-SQV-CC-F004F
B21-SQV-CC_5_6	2.38E-05	5.33E-05	3.22	CCF of two components: B21-SQV-CC-F004E & B21-SQV-CC-F004F
B21-SQV-CC_ALL	1.50E-04	4.92E-02	328.45	CCF of all components in group 'B21-SQV-CC'
B21-SQV-CC-F004A	3.00E-03	1.67E-04	1.05	EXPLOSIVE VALVE DPV F004A FAILS TO OPERATE
B21-SQV-CC-F004B	3.00E-03	1.67E-04	1.05	EXPLOSIVE VALVE DPV B FAILS TO OPERATE
B21-SQV-CC-F004C	3.00E-03	1.67E-04	1.05	EXPLOSIVE VALVE DPV C FAILS TO OPERATE
B21-SQV-CC-F004D	3.00E-03	1.67E-04	1.05	EXPLOSIVE VALVE DPV D FAILS TO OPERATE
B21-SQV-CC-F004E	3.00E-03	1.67E-04	1.05	EXPLOSIVE VALVE DPV E FAILS TO OPERATE

Table 13.7-5

Results - Internal Flooding Shutdown Importance Measure Report

F-V and RAW Importance Measures Report

(F-V = Fussell-Vesely Importance Measure; RAW = Risk Achievement Worth Importance Measure)

Flooding Shutdown

Core Damage Frequency = 5.21E-09

Event Name	Probability	Fus Ves	RAW	Description
B21-SQV-CC-F004F	3.00E-03	1.67E-04	1.05	EXPLOSIVE VALVE DPV F FAILS TO OPERATE
B21-UV_-CC-F102_1_2	2.99E-06	3.15E-04	106.14	CCF of two components: B21-UV_-CC-F102A & B21-UV_-CC-F102B
B21-UV_-CC-F102A	1.00E-04	1.58E-03	16.71	CHECK VALVE F102A FAILS TO OPEN
B21-UV_-CC-F102B	1.00E-04	5.10E-04	6.07	CHECK VALVE F102B FAILS TO OPEN
B21-UV_-CC-F111_1_2	2.99E-06	3.15E-04	106.14	CCF of two components: B21-UV_-CC-F111A & B21-UV_-CC-F111B
B21-UV_-CC-F111A	1.00E-04	1.58E-03	16.71	CHECK VALVE F111A FAILS TO OPEN
B21-UV_-CC-F111B	1.00E-04	5.10E-04	6.07	CHECK VALVE F111B FAILS TO OPEN
B21-UV_-OC-F102A	4.80E-06	4.86E-05	10.89	CHECK VALVE F102A FAILS TO REMAIN OPEN
B21-UV_-OC-F102B	4.80E-06	1.67E-05	4.44	CHECK VALVE F102B FAILS TO REMAIN OPEN
B32-HX_-PG-HX001A	2.40E-05	7.41E-06	1.3	Heat Exchanger HX001A Plugs
B32-HX_-PG-HX001B	2.40E-05	7.41E-06	1.3	Heat Exchanger HX001B Plugs
B32-HX_-PG-HX002A	2.40E-05	7.41E-06	1.3	Heat Exchanger HX002A Plugs
B32-HX_-PG-HX002B	2.40E-05	7.41E-06	1.3	Heat Exchanger HX002B Plugs
B32-NONCONDENSE	1.00E+00	2.77E-03	1	Non condensable gasses form in ICS sufficiently to require venting
B32-SOV-FD-F012A	1.00E-03	7.33E-06	1.01	F012A fails to open on demand
B32-SOV-FD-F012B	1.00E-03	7.33E-06	1.01	SOLENOID VALVE (FAILURE TO DE-ENERGIZE)
B32-SOV-FE-09/10_ALL	5.00E-05	1.19E-06	1.02	CCF of all components in group 'B32-SOV-FE-09/10'
B32-SOV-FE-F009A	1.00E-03	1.03E-04	1.1	F009A fails to open on demand
B32-SOV-FE-F009B	1.00E-03	1.03E-04	1.1	SOLENOID VALVE (FAILURE TO ENERGIZE)

Table 13.7-5

Results - Internal Flooding Shutdown Importance Measure Report

F-V and RAW Importance Measures Report

(F-V = Fussell-Vesely Importance Measure; RAW = Risk Achievement Worth Importance Measure)

Flooding Shutdown

Core Damage Frequency = 5.21E-09

Event Name	Probability	Fus Ves	RAW	Description
B32-SOV-FE-F010A	1.00E-03	1.03E-04	1.1	F010A fails to open on demand
B32-SOV-FE-F010B	1.00E-03	1.03E-04	1.1	SOLENOID VALVE (FAILURE TO ENERGIZE)
B32-SRV-RO-F011A	2.00E-04	7.24E-07	1	RELIEF VALVE F011A FAILS TO OPEN
B32-SRV-RO-F011B	2.00E-04	7.24E-07	1	RELIEF VALVE F011B FAIL TO OPEN
B32-TM-LOOPA-IND	3.84E-02	3.79E-02	1.95	ICS LOOP A IN TEST OR MAINTENANCE BY ITSELF
B32-TM-LOOPA-MULT	1.37E-03	1.13E-03	1.82	ICS LOOP A IN TEST OR MAINTENANCE, MULTIPLE LOOPS
B32-TM-LOOPB-IND	3.84E-02	3.79E-02	1.95	ICS LOOP B IN TEST OR MAINTENANCE BY ITSELF
B32-TM-LOOPB-MULT	1.37E-03	1.13E-03	1.82	ICS LOOP B IN TEST OR MAINTENANCE, MULTIPLE LOOPS
B32-XHE-FO-VENT	1.76E-01	2.73E-03	1.01	Operator fails to open vent
BOPCWS-SYS-FAILS	1.00E-03	2.09E-03	3.09	BALANCE OF PLANT CHILLED WATER SYSTEM FAILS
C12-ACV-CO-F012	7.20E-07	1.02E-06	2.36	AIR OPERATED VALVE F012 FAILS TO REMAIN CLOSED
C12-ACV-CO-F030	7.20E-07	1.02E-06	2.36	AIR OPERATED VALVE F030 FAILS TO REMAIN CLOSED
C12-ACV-OC-F071	2.40E-05	4.89E-05	3.03	F071 FAILS TO REMAIN OPEN
C12-ACV-OC-F072	2.40E-05	4.89E-05	3.03	F072 FAILS TO REMAIN OPEN
C12-ACV-OO-F012	2.00E-03	1.14E-02	6.68	AIR OPERATED VALVE F012 FAILS TO CLOSE
C12-ACV-OO-F012-F030_1_2	1.93E-04	1.03E-03	6.29	CCF of two components: C12-ACV-OO-F012 & C12-ACV-OO-F030
C12-ACV-OO-F030	2.00E-03	1.14E-02	6.68	AIR OPERATED VALVE F030 FAILS TO CLOSE
C12-BV_-OC-F064	7.20E-07	1.02E-06	2.36	MANUAL VALVE F064 PLUGS/TRANSFERS CLOSED
C12-BV_-RE-F003B	1.21E-02	1.93E-03	1.16	MISPOSITION OF VALVE F003B

Table 13.7-5

Results - Internal Flooding Shutdown Importance Measure Report

F-V and RAW Importance Measures Report (F-V = Fussell-Vesely Importance Measure; RAW = Risk Achievement Worth Importance Measure) Flooding Shutdown Core Damage Frequency = 5.21E-09				
Event Name	**Probability**	**Fus Ves**	**RAW**	**Description**
C12-BV_-RE-F013A	4.84E-02	2.78E-02	1.55	MISPOSITION OF VALVE F013A
C12-BV_-RE-F013B	4.84E-02	2.78E-02	1.55	MISPOSITION OF VALVE F013B
C12-BV_-RE-F015A	4.84E-02	2.78E-02	1.55	MISPOSITION OF VALVE F015A
C12-BV_-RE-F015B	4.84E-02	2.78E-02	1.55	MISPOSITION OF VALVE F015B
C12-BV_-RE-F018A	1.21E-02	3.08E-03	1.25	MISPOSITION OF VALVE F018A
C12-BV_-RE-F018B	1.21E-02	1.93E-03	1.16	MISPOSITION OF VALVE FO18B
C12-BV_-RE-F021A	1.21E-02	3.08E-03	1.25	MISPOSITION OF VALVE F021A
C12-BV_-RE-F021B	1.21E-02	1.93E-03	1.16	MISPOSITION OF VALVE F021B
C12-BV_-RE-F064	4.84E-02	1.01E-01	2.99	MISPOSITION OF OPEN VALVE F064
C12-HX_-LK-C001AHX	2.40E-05	8.95E-07	1.04	CRD HX LEAKS OR RUPTURES
C12-HX_-LK-C001BHX	2.40E-05	5.97E-07	1.02	HEAT EXCHANGER (LEAK OR RUPTURE)
C12-HX_-LK-CRDA	2.40E-05	3.63E-05	2.5	CRD PUMP A OIL COOLER (LEAK OR RUPTURE)
C12-HX_-PG-C001AHX	2.40E-05	8.95E-07	1.04	CRD HEAT EXCHANGER (PLUGGED)
C12-HX_-PG-C001BHX	2.40E-05	5.97E-07	1.02	CRD HEAT EXCHANGER PLUGS
C12-MOV-CC-F014_1_2	2.11E-04	1.12E-03	6.31	CCF of two components: C12-MOV-CC-F014A & C12-MOV-CC-F014B
C12-MOV-CC-F014A	4.00E-03	2.13E-03	1.53	MOTOR OPER. VALVE F014A FAILS TO OPEN
C12-MOV-CC-F014B	4.00E-03	2.13E-03	1.53	MOTOR OPER. VALVE F014B FAILS TO OPEN
C12-MOV-CC-F020_1_2	2.11E-04	1.12E-03	6.31	CCF of two components: C12-MOV-CC-F020A & C12-MOV-CC-F020B
C12-MOV-CC-F020A	4.00E-03	9.19E-04	1.23	MOTOR OPER. VALVE F020A FAILS TO OPEN

Table 13.7-5

Results - Internal Flooding Shutdown Importance Measure Report

F-V and RAW Importance Measures Report

(F-V = Fussell-Vesely Importance Measure; RAW = Risk Achievement Worth Importance Measure)

Flooding Shutdown

Core Damage Frequency = 5.21E-09

Event Name	Probability	Fus Ves	RAW	Description
C12-MOV-CC-F020B	4.00E-03	5.72E-04	1.14	MOTOR OPER. VALVE F020B FAILS TO OPEN
C12-MOV-CC-F023	4.00E-03	2.30E-02	6.72	MOTOR OPERATED VALVE F023 FAILS TO OPEN
C12-MOV-CO-F024	1.20E-05	4.95E-05	5.09	MOTOR OPERATED VALVE F024 FAILS TO REMAIN CLOSED
C12-MOV-CO-F062A	1.20E-05	4.95E-05	5.09	MOTOR OPERATED VALVE F062A FAILS TO REMAIN CLOSE
C12-MOV-CO-F062B	1.20E-05	4.95E-05	5.09	MOTOR OPERATED VALVE F062B FAILS TO REMAIN CLOSED
C12-MOV-OC-F014_1_2	2.80E-07	2.98E-07	2.06	CCF of two components: C12-MOV-OC-F014A & C12-MOV-OC-F014B
C12-MOV-OC-F020_1_2	2.80E-07	2.98E-07	2.06	CCF of two components: C12-MOV-OC-F020A & C12-MOV-OC-F020B
C12-MOV-OC-F023	3.36E-06	1.06E-05	4.11	MOTOR OPERATED VALVE F023 FAILS TO REMAIN OPEN
C12-MOV-OO-F024	4.00E-03	2.30E-02	6.72	MOTOR OPERATED VALVE F024 FAILS TO CLOSE
C12-MOV-OO-F062A	4.00E-03	2.30E-02	6.72	MOTOR OPERATED VALVE F062A FAILS TO CLOSE
C12-MOV-OO-F062B	4.00E-03	2.30E-02	6.72	MOTOR OPERATED VALVE F062B FAILS TO CLOSE
C12-MP_-FR-C001_1_2	3.96E-05	1.88E-04	5.7	CCF of two components: C12-MP_-FR-C001A & C12-MP_-FR-C001B
C12-MP_-FR-C001A	6.00E-04	1.04E-04	1.17	MOTOR-DRIVEN PUMP C001A FAILS TO RUN
C12-MP_-FR-C001AOIL	6.00E-04	1.04E-04	1.17	MOTOR-DRIVEN AUX. OIL PUMP FOR C001A FAILS TO RUN
C12-MP_-FR-C001B	6.00E-04	6.45E-05	1.11	MOTOR-DRIVEN PUMP C001B FAILS TO RUN
C12-MP_-FR-C001BOIL	6.00E-04	6.45E-05	1.11	MOTOR-DRIVEN AUX. OIL PUMP FOR C001B FAILS TO RUN
C12-MP_-FR-C001OIL_1_2	1.41E-05	5.90E-05	5.14	CCF of two components: C12-MP_-FR-C001AOIL & C12-MP_-FR-C001BOIL
C12-MP_-FS-C001B	2.00E-03	2.60E-04	1.13	MOTOR-DRIVEN PUMP C001B FAILS TO START
C12-MP_-FS-C001BOIL	2.00E-03	2.60E-04	1.13	MOTOR-DRIVEN AUX. OIL PUMP FOR C001B FAILS TO START

Table 13.7-5

Results - Internal Flooding Shutdown Importance Measure Report

F-V and RAW Importance Measures Report

(F-V = Fussell-Vesely Importance Measure; RAW = Risk Achievement Worth Importance Measure)

Flooding Shutdown

Core Damage Frequency = 5.21E-09

Event Name	Probability	Fus Ves	RAW	Description
C12-SYS-TM-TRAINB	3.00E-03	4.13E-04	1.14	TRAIN B IN MAINTENANCE
C12-UV_-CC-F019_1_2	2.99E-06	9.03E-06	3.98	CCF of two components: C12-UV_-CC-F019A & C12-UV_-CC-F019B
C12-UV_-CC-F019A	1.00E-04	1.05E-05	1.1	CHECK VALVE F019A FAILS TO OPEN
C12-UV_-CC-F019B	1.00E-04	6.65E-06	1.06	CHECK VALVE F019B FAILS TO OPEN
C12-UV_-CC-F022	1.00E-04	5.10E-04	6.07	CHECK VALVE F022 FAILS TO OPEN
C12-UV_-OC-F019_1_2	2.53E-07	2.56E-07	2.01	CCF of two components: C12-UV_-OC-F019A & C12-UV_-OC-F019B
C12-UV_-OC-F022	4.80E-06	1.67E-05	4.44	CHECK VALVE F022 FAILS TO REMAIN OPEN
C12-UV_-OC-F063	4.80E-06	8.91E-06	2.84	CHECK VALVE F063 FAILS TO REMAIN OPEN
C12-XHE-FO-LEVEL2	3.21E-02	1.87E-01	6.65	Operator fails to back-up CRD actuation
C62-CCFSOFTWARE	1.00E-04	1.49E-03	15.81	N-DCIS COMMON CAUSE SOFTWARE FAILURE
C62-CCFSOFTWARE_S	1.00E-04	1.49E-03	15.81	N-DCIS SPURIOUS COMMON CAUSE SOFTWARE FAILURE
C62-DTM-FC-CFS	6.00E-04	1.25E-03	3.09	CFS MASTER DTM
C62-DTM-FC-PIPA	6.00E-04	2.29E-05	1.04	PIP A MASTER DTM
C62-DTM-FC-PIPB	6.00E-04	3.83E-07	1	PIP B MASTER DTM
C62-DTM-FC-PIPMP_1_2	6.67E-05	9.68E-04	15.43	CCF of two components: C62-DTM-FC-PIPA & C62-DTM-FC-PIPB
C62-LDD-FC-LOADS	1.86E-06	1.09E-05	6.65	COMMON CAUSE FAILURE OF REMAINING NDCIS LOAD DRIVERS
C62-LOG-FC-CFSMP_1_2	1.00E-05	1.97E-05	2.96	CCF of two components: C62-LOG-FC-CFS1 & C62-LOG-FC-CFS2

Table 13.7-5

Results - Internal Flooding Shutdown Importance Measure Report

F-V and RAW Importance Measures Report (F-V = Fussell-Vesely Importance Measure; RAW = Risk Achievement Worth Importance Measure) Flooding Shutdown Core Damage Frequency = 5.21E-09				
Event Name	**Probability**	**Fus Ves**	**RAW**	**Description**
C62-LOG-FC-CFSMP_1_2_3	2.00E-06	3.49E-06	2.73	CCF of three components: C62-LOG-FC-CFS1 & C62-LOG-FC-CFS2 & C62-LOG-FC-CFS3
C62-LOG-FC-CFSMP_1_3	1.00E-05	1.97E-05	2.96	CCF of two components: C62-LOG-FC-CFS1 & C62-LOG-FC-CFS3
C62-LOG-FC-CFSMP_2_3	1.00E-05	1.97E-05	2.96	CCF of two components: C62-LOG-FC-CFS2 & C62-LOG-FC-CFS3
C62-LOG-FC-PIPMP_1_2	6.66E-06	8.61E-06	2.28	CCF of two components: C62-LOG-FC-PIPA1 & C62-LOG-FC-PIPA2
C62-LOG-FC-PIPMP_3_4	6.66E-06	8.61E-06	2.28	CCF of two components: C62-LOG-FC-PIPB1 & C62-LOG-FC-PIPB2
C62-LOG-FC-PIPMP_ALL	1.80E-05	2.21E-04	13.13	CCF of all components in group 'C62-LOG-FC-PIPMP'
C62-PSP-FO-CFSEP_ALL	3.60E-07	3.83E-07	2.07	CCF of all components in group 'C62-PSP-FO-CFSEP'
C62-PSP-FO-PIPEP_ALL	3.60E-07	3.83E-07	2.07	CCF of all components in group 'C62-PSP-FO-PIPEP'
C62-PT_-NO-CFSTC_1_2	3.84E-06	6.99E-06	2.81	CCF of two components: C62-PT_-NO-TCCPPRSA & C62-PT_-NO-TCCPPRSB
C62-PT_-NO-PIPRC_ALL	1.73E-06	9.72E-06	6.51	CCF of all components in group 'C62-PT_-NO-PIPRC'
C62-PT_-NO-PIPSA_ALL	1.73E-06	2.85E-06	2.63	CCF of all components in group 'C62-PT_-NO-PIPSA'

Table 13.7-5

Results - Internal Flooding Shutdown Importance Measure Report

F-V and RAW Importance Measures Report

(F-V = Fussell-Vesely Importance Measure; RAW = Risk Achievement Worth Importance Measure)

Flooding Shutdown

Core Damage Frequency = 5.21E-09

Event Name	Probability	Fus Ves	RAW	Description
C62-TT_-NO-PIPRC_ALL	1.26E-06	5.84E-06	5.53	CCF of all components in group 'C62-TT_-NO-PIPRC'
C63-CCFSOFTWARE	1.00E-04	1.49E-01	1.49E+03	Common cause failure of software
C63-CCFSOFTWARE_S	1.00E-04	2.62E-04	3.61	ESF SPURIOUS COMMON CAUSE SOFTWARE FAILURE
C63-DTM-FC-ESFD1	6.00E-04	1.12E-05	1.02	ESF DIV 1 MASTER DTM
C63-DTM-FC-ESFD2	6.00E-04	1.12E-05	1.02	ESF DIV 2 MASTER DTM
C63-DTM-FC-ESFD3	6.00E-04	1.12E-05	1.02	ESF DIV 3 MASTER DTM
C63-DTM-FC-ESFD4	6.00E-04	1.12E-05	1.02	ESF DIV 4 MASTER DTM
C63-DTM-FC-ESFLG_1_2	1.11E-05	7.50E-06	1.65	CCF of two components: C63-DTM-FC-ESFD1 & C63-DTM-FC-ESFD2
C63-DTM-FC-ESFLG_1_2_3	1.11E-06	1.55E-03	1.39E+03	CCF of three components: C63-DTM-FC-ESFD1 & C63-DTM-FC-ESFD2 & C63-DTM-FC-ESFD3
C63-DTM-FC-ESFLG_1_2_4	1.11E-06	1.55E-03	1.39E+03	CCF of three components: C63-DTM-FC-ESFD1 & C63-DTM-FC-ESFD2 & C63-DTM-FC-ESFD4
C63-DTM-FC-ESFLG_1_3	1.11E-05	7.50E-06	1.65	CCF of two components: C63-DTM-FC-ESFD1 & C63-DTM-FC-ESFD3
C63-DTM-FC-ESFLG_1_3_4	1.11E-06	1.55E-03	1.39E+03	CCF of three components: C63-DTM-FC-ESFD1 & C63-DTM-FC-ESFD3 & C63-DTM-FC-ESFD4
C63-DTM-FC-ESFLG_1_4	1.11E-05	7.50E-06	1.65	CCF of two components: C63-DTM-FC-ESFD1 & C63-DTM-FC-ESFD4

Table 13.7-5

Results - Internal Flooding Shutdown Importance Measure Report

F-V and RAW Importance Measures Report (F-V = Fussell-Vesely Importance Measure; RAW = Risk Achievement Worth Importance Measure) Flooding Shutdown Core Damage Frequency = 5.21E-09				
Event Name	**Probability**	**Fus Ves**	**RAW**	**Description**
C63-DTM-FC-ESFLG_2_3	1.11E-05	7.50E-06	1.65	CCF of two components: C63-DTM-FC-ESFD2 & C63-DTM-FC-ESFD3
C63-DTM-FC-ESFLG_2_3_4	1.11E-06	1.55E-03	1.39E+03	CCF of three components: C63-DTM-FC-ESFD2 & C63-DTM-FC-ESFD3 & C63-DTM-FC-ESFD4
C63-DTM-FC-ESFLG_2_4	1.11E-05	7.50E-06	1.65	CCF of two components: C63-DTM-FC-ESFD2 & C63-DTM-FC-ESFD4
C63-DTM-FC-ESFLG_3_4	1.11E-05	7.50E-06	1.65	CCF of two components: C63-DTM-FC-ESFD3 & C63-DTM-FC-ESFD4
C63-DTM-FC-ESFLG_ALL	3.00E-05	4.43E-02	1.48E+03	CCF of all components in group 'C63-DTM-FC-ESFLG'
C63-LDD-FC-ESFLOADS	1.86E-06	2.64E-03	1.41E+03	CCF OF ALL ESF LOAD DRIVERS
C63-LDD-FC-S1B32F012A-A	1.09E-03	8.01E-06	1.01	LOAD DRIVER FAILS DURING OPERATION
C63-LDD-FC-S1B32F012B-B	1.09E-03	8.01E-06	1.01	LOAD DRIVER FAILS DURING OPERATION
C63-LDD-FC-S2B32F012A-A	1.09E-03	8.01E-06	1.01	LOAD DRIVER FAILS DURING OPERATION
C63-LDD-FC-S2B32F012B-B	1.09E-03	8.01E-06	1.01	LOAD DRIVER FAILS DURING OPERATION
C63-LOG-FC-ESFLG_ALL	1.80E-05	2.65E-02	1.47E+03	CCF of all components in group 'C63-LOG-FC-ESFLG'

Table 13.7-5

Results - Internal Flooding Shutdown Importance Measure Report

F-V and RAW Importance Measures Report

(F-V = Fussell-Vesely Importance Measure; RAW = Risk Achievement Worth Importance Measure)

Flooding Shutdown

Core Damage Frequency = 5.21E-09

Event Name	Probability	Fus Ves	RAW	Description
C63-LT_-NO-ESFRX_1_2_3	1.91E-08	1.61E-05	824.14	CCF of three components: C63-LT_-NO-ESFRXLVLA & C63-LT_-NO-ESFRXLVLB & C63-LT_-N
C63-LT_-NO-ESFRX_1_2_4	1.91E-08	1.61E-05	824.14	CCF of three components: C63-LT_-NO-ESFRXLVLA & C63-LT_-NO-ESFRXLVLB & C63-LT_-N
C63-LT_-NO-ESFRX_1_3_4	1.91E-08	1.61E-05	824.14	CCF of three components: C63-LT_-NO-ESFRXLVLA & C63-LT_-NO-ESFRXLVLC & C63-LT_-N
C63-LT_-NO-ESFRX_2_3_4	1.91E-08	1.61E-05	824.14	CCF of three components: C63-LT_-NO-ESFRXLVLB & C63-LT_-NO-ESFRXLVLC & C63-LT_-N
C63-LT_-NO-ESFRX_ALL	3.60E-06	4.68E-03	1.30E+03	CCF of all components in group 'C63-LT_-NO-ESFRX'
C63-PSP-FO-ESFEP_ALL	3.60E-07	1.89E-04	522.04	CCF of all components in group 'C63-PSP-FO-ESFEP'
CRD-HX_-LK-CRDB	2.40E-05	3.63E-05	2.5	CRD PUMP B OIL COOLER (LEAK OR RUPTURE)
E50-BV_-OC-F001A	2.63E-04	2.82E-04	2.06	MAINTENANCE VALVE F001A PLUGS/TRANSFERS CLOSED
E50-BV_-OC-F001D	2.63E-04	2.82E-04	2.06	MAINTENANCE VALVE F001D PLUGS/TRANSFERS CLOSED
E50-BV_-OC-F001E	2.63E-04	2.82E-04	2.06	MAINTENANCE VALVE F001E PLUGS/TRANSFERS CLOSED
E50-BV_-OC-F001H	2.63E-04	2.82E-04	2.06	MAINTENANCE VALVE F001H PLUGS/TRANSFERS CLOSED
E50-BV_-OC-F004A	2.63E-04	8.67E-02	330.61	MAINTENANCE VALVE F004A PLUGS/TRANSFERS CLOSED
E50-BV_-OC-F004D	2.63E-04	8.67E-02	330.61	MAINTENANCE VALVE F004D PLUGS/TRANSFERS CLOSED
E50-POL-RP-POOLA	7.20E-06	2.24E-03	311.17	GDCS POOLS A LEAKS CATASTROPHICALLY
E50-POL-RP-POOLB/C	7.20E-06	7.24E-06	1.99	GDCS POOL B/C LEAKS CATASTROPHICALLY

Table 13.7-5

Results - Internal Flooding Shutdown Importance Measure Report

F-V and RAW Importance Measures Report

(F-V = Fussell-Vesely Importance Measure; RAW = Risk Achievement Worth Importance Measure)

Flooding Shutdown

Core Damage Frequency = 5.21E-09

Event Name	Probability	Fus Ves	RAW	Description
E50-POL-RP-POOLD	7.20E-06	2.24E-03	311.17	GDCS POOL D LEAKS CATASTROPHICALLY
E50-SQV-CC-EQU_1_2	1.11E-04	6.39E-07	1.01	CCF of two components: E50-SQV-CC-EQU-F006A & E50-SQV-CC-EQU-F006B
E50-SQV-CC-EQU_1_2_3	1.11E-05	1.12E-05	1.99	CCF of three components: E50-SQV-CC-EQU-F006A & E50-SQV-CC-EQU-F006B & E50-SQV-C
E50-SQV-CC-EQU_1_2_4	1.11E-05	1.12E-05	1.99	CCF of three components: E50-SQV-CC-EQU-F006A & E50-SQV-CC-EQU-F006B & E50-SQV-C
E50-SQV-CC-EQU_1_3	1.11E-04	6.39E-07	1.01	CCF of two components: E50-SQV-CC-EQU-F006A & E50-SQV-CC-EQU-F006C
E50-SQV-CC-EQU_1_3_4	1.11E-05	1.12E-05	1.99	CCF of three components: E50-SQV-CC-EQU-F006A & E50-SQV-CC-EQU-F006C & E50-SQV-C
E50-SQV-CC-EQU_1_4	1.11E-04	6.39E-07	1.01	CCF of two components: E50-SQV-CC-EQU-F006A & E50-SQV-CC-EQU-F006D
E50-SQV-CC-EQU_2_3	1.11E-04	6.39E-07	1.01	CCF of two components: E50-SQV-CC-EQU-F006B & E50-SQV-CC-EQU-F006C
E50-SQV-CC-EQU_2_3_4	1.11E-05	1.12E-05	1.99	CCF of three components: E50-SQV-CC-EQU-F006B & E50-SQV-CC-EQU-F006C & E50-SQV-C
E50-SQV-CC-EQU_2_4	1.11E-04	6.39E-07	1.01	CCF of two components: E50-SQV-CC-EQU-F006B & E50-SQV-CC-EQU-F006D
E50-SQV-CC-EQU_3_4	1.11E-04	6.39E-07	1.01	CCF of two components: E50-SQV-CC-EQU-F006C & E50-SQV-CC-EQU-F006D
E50-SQV-CC-EQU_ALL	3.00E-04	9.90E-02	330.81	CCF of all components in group 'E50-SQV-CC-EQU'
E50-SQV-CC-EQU-F006A	6.00E-03	1.12E-05	1	SQUIB VALVE F006A FAILS TO OPERATE IN EXTREME CONDITIONS
E50-SQV-CC-EQU-F006B	6.00E-03	1.12E-05	1	SQUIB VALVE F006B FAILS TO OPERATE IN EXTREME CONDITIONS

Table 13.7-5

Results - Internal Flooding Shutdown Importance Measure Report

F-V and RAW Importance Measures Report

(F-V = Fussell-Vesely Importance Measure; RAW = Risk Achievement Worth Importance Measure)

Flooding Shutdown

Core Damage Frequency = 5.21E-09

Event Name	Probability	Fus Ves	RAW	Description
E50-SQV-CC-EQU-F006C	6.00E-03	1.12E-05	1	SQUIB VALVE F006C FAILS TO OPERATE IN EXTREME CONDITIONS
E50-SQV-CC-EQU-F006D	6.00E-03	1.12E-05	1	SQUIB VALVE F006D FAILS TO OPERATE IN EXTREME CONDITIONS
E50-SQV-CC-INJ_1_2	2.38E-05	1.50E-05	1.62	CCF of two components: E50-SQV-CC-INJ-F002A & E50-SQV-CC-INJ-F002B
E50-SQV-CC-INJ_1_2_5	7.94E-07	2.12E-04	266.28	CCF of three components: E50-SQV-CC-INJ-F002A & E50-SQV-CC-INJ-F002B & E50-SQV-C
E50-SQV-CC-INJ_1_3	2.38E-05	1.50E-05	1.62	CCF of two components: E50-SQV-CC-INJ-F002A & E50-SQV-CC-INJ-F002C
E50-SQV-CC-INJ_1_3_5	7.94E-07	2.12E-04	266.28	CCF of three components: E50-SQV-CC-INJ-F002A & E50-SQV-CC-INJ-F002C & E50-SQV-C
E50-SQV-CC-INJ_1_4	2.38E-05	3.00E-05	2.23	CCF of two components: E50-SQV-CC-INJ-F002A & E50-SQV-CC-INJ-F002D
E50-SQV-CC-INJ_1_4_5	7.94E-07	2.12E-04	266.28	CCF of three components: E50-SQV-CC-INJ-F002A & E50-SQV-CC-INJ-F002D & E50-SQV-C
E50-SQV-CC-INJ_1_4_8	7.94E-07	2.12E-04	266.28	CCF of three components: E50-SQV-CC-INJ-F002A & E50-SQV-CC-INJ-F002D & E50-SQV-C
E50-SQV-CC-INJ_1_5	2.38E-05	7.61E-03	320.07	CCF of two components: E50-SQV-CC-INJ-F002A & E50-SQV-CC-INJ-F002E
E50-SQV-CC-INJ_1_5_6	7.94E-07	2.12E-04	266.28	CCF of three components: E50-SQV-CC-INJ-F002A & E50-SQV-CC-INJ-F002E & E50-SQV-C
E50-SQV-CC-INJ_1_5_7	7.94E-07	2.12E-04	266.28	CCF of three components: E50-SQV-CC-INJ-F002A & E50-SQV-CC-INJ-F002E & E50-SQV-C
E50-SQV-CC-INJ_1_5_8	7.94E-07	2.12E-04	266.28	CCF of three components: E50-SQV-CC-INJ-F002A & E50-SQV-CC-INJ-F002E & E50-SQV-C

Table 13.7-5

Results - Internal Flooding Shutdown Importance Measure Report

F-V and RAW Importance Measures Report

(F-V = Fussell-Vesely Importance Measure; RAW = Risk Achievement Worth Importance Measure)

Flooding Shutdown

Core Damage Frequency = 5.21E-09

Event Name	Probability	Fus Ves	RAW	Description
E50-SQV-CC-INJ_1_6	2.38E-05	1.50E-05	1.62	CCF of two components: E50-SQV-CC-INJ-F002A & E50-SQV-CC-INJ-F002F
E50-SQV-CC-INJ_1_7	2.38E-05	1.50E-05	1.62	CCF of two components: E50-SQV-CC-INJ-F002A & E50-SQV-CC-INJ-F002G
E50-SQV-CC-INJ_1_8	2.38E-05	3.00E-05	2.23	CCF of two components: E50-SQV-CC-INJ-F002A & E50-SQV-CC-INJ-F002H
E50-SQV-CC-INJ_2_4	2.38E-05	1.50E-05	1.62	CCF of two components: E50-SQV-CC-INJ-F002B & E50-SQV-CC-INJ-F002D
E50-SQV-CC-INJ_2_4_8	7.94E-07	2.12E-04	266.28	CCF of three components: E50-SQV-CC-INJ-F002B & E50-SQV-CC-INJ-F002D & E50-SQV-C
E50-SQV-CC-INJ_2_5	2.38E-05	1.50E-05	1.62	CCF of two components: E50-SQV-CC-INJ-F002B & E50-SQV-CC-INJ-F002E
E50-SQV-CC-INJ_2_8	2.38E-05	1.50E-05	1.62	CCF of two components: E50-SQV-CC-INJ-F002B & E50-SQV-CC-INJ-F002H
E50-SQV-CC-INJ_3_4	2.38E-05	1.50E-05	1.62	CCF of two components: E50-SQV-CC-INJ-F002C & E50-SQV-CC-INJ-F002D
E50-SQV-CC-INJ_3_4_8	7.94E-07	2.12E-04	266.28	CCF of three components: E50-SQV-CC-INJ-F002C & E50-SQV-CC-INJ-F002D & E50-SQV-C
E50-SQV-CC-INJ_3_5	2.38E-05	1.50E-05	1.62	CCF of two components: E50-SQV-CC-INJ-F002C & E50-SQV-CC-INJ-F002E
E50-SQV-CC-INJ_3_8	2.38E-05	1.50E-05	1.62	CCF of two components: E50-SQV-CC-INJ-F002C & E50-SQV-CC-INJ-F002H
E50-SQV-CC-INJ_4_5	2.38E-05	3.00E-05	2.23	CCF of two components: E50-SQV-CC-INJ-F002D & E50-SQV-CC-INJ-F002E
E50-SQV-CC-INJ_4_5_8	7.94E-07	2.12E-04	266.28	CCF of three components: E50-SQV-CC-INJ-F002D & E50-SQV-CC-INJ-F002E & E50-SQV-C
E50-SQV-CC-INJ_4_6	2.38E-05	1.50E-05	1.62	CCF of two components: E50-SQV-CC-INJ-F002D & E50-SQV-CC-INJ-F002F
E50-SQV-CC-INJ_4_6_8	7.94E-07	2.12E-04	266.28	CCF of three components: E50-SQV-CC-INJ-F002D & E50-SQV-CC-INJ-F002F & E50-SQV-C
E50-SQV-CC-INJ_4_7	2.38E-05	1.50E-05	1.62	CCF of two components: E50-SQV-CC-INJ-F002D & E50-SQV-CC-INJ-F002G

Table 13.7-5

Results - Internal Flooding Shutdown Importance Measure Report

F-V and RAW Importance Measures Report (F-V = Fussell-Vesely Importance Measure; RAW = Risk Achievement Worth Importance Measure) Flooding Shutdown Core Damage Frequency = 5.21E-09				
Event Name	**Probability**	**Fus Ves**	**RAW**	**Description**
E50-SQV-CC-INJ_4_7_8	7.94E-07	2.12E-04	266.28	CCF of three components: E50-SQV-CC-INJ-F002D & E50-SQV-CC-INJ-F002G & E50-SQV-C
E50-SQV-CC-INJ_4_8	2.38E-05	7.61E-03	320.07	CCF of two components: E50-SQV-CC-INJ-F002D & E50-SQV-CC-INJ-F002H
E50-SQV-CC-INJ_5_6	2.38E-05	1.50E-05	1.62	CCF of two components: E50-SQV-CC-INJ-F002E & E50-SQV-CC-INJ-F002F
E50-SQV-CC-INJ_5_7	2.38E-05	1.50E-05	1.62	CCF of two components: E50-SQV-CC-INJ-F002E & E50-SQV-CC-INJ-F002G
E50-SQV-CC-INJ_5_8	2.38E-05	3.00E-05	2.23	CCF of two components: E50-SQV-CC-INJ-F002E & E50-SQV-CC-INJ-F002H
E50-SQV-CC-INJ_6_8	2.38E-05	1.50E-05	1.62	CCF of two components: E50-SQV-CC-INJ-F002F & E50-SQV-CC-INJ-F002H
E50-SQV-CC-INJ_2_4	2.38E-05	1.50E-05	1.62	CCF of two components: E50-SQV-CC-INJ-F002B & E50-SQV-CC-INJ-F002D
E50-SQV-CC-INJ_2_4_8	7.94E-07	2.12E-04	266.28	CCF of three components: E50-SQV-CC-INJ-F002B & E50-SQV-CC-INJ-F002D & E50-SQV-C
E50-SQV-CC-INJ_2_5	2.38E-05	1.50E-05	1.62	CCF of two components: E50-SQV-CC-INJ-F002B & E50-SQV-CC-INJ-F002E
E50-SQV-CC-INJ_2_8	2.38E-05	1.50E-05	1.62	CCF of two components: E50-SQV-CC-INJ-F002B & E50-SQV-CC-INJ-F002H
E50-SQV-CC-INJ_3_4	2.38E-05	1.50E-05	1.62	CCF of two components: E50-SQV-CC-INJ-F002C & E50-SQV-CC-INJ-F002D
E50-SQV-CC-INJ_3_4_8	7.94E-07	2.12E-04	266.28	CCF of three components: E50-SQV-CC-INJ-F002C & E50-SQV-CC-INJ-F002D & E50-SQV-C
E50-SQV-CC-INJ_3_5	2.38E-05	1.50E-05	1.62	CCF of two components: E50-SQV-CC-INJ-F002C & E50-SQV-CC-INJ-F002E
E50-SQV-CC-INJ_3_8	2.38E-05	1.50E-05	1.62	CCF of two components: E50-SQV-CC-INJ-F002C & E50-SQV-CC-INJ-F002H
E50-SQV-CC-INJ_4_5	2.38E-05	3.00E-05	2.23	CCF of two components: E50-SQV-CC-INJ-F002D & E50-SQV-CC-INJ-F002E
E50-SQV-CC-INJ_4_5_8	7.94E-07	2.12E-04	266.28	CCF of three components: E50-SQV-CC-INJ-F002D & E50-SQV-CC-INJ-F002E & E50-SQV-C

Table 13.7-5

Results - Internal Flooding Shutdown Importance Measure Report

F-V and RAW Importance Measures Report

(F-V = Fussell-Vesely Importance Measure; RAW = Risk Achievement Worth Importance Measure)

Flooding Shutdown

Core Damage Frequency = 5.21E-09

Event Name	Probability	Fus Ves	RAW	Description
E50-SQV-CC-INJ_4_6	2.38E-05	1.50E-05	1.62	CCF of two components: E50-SQV-CC-INJ-F002D & E50-SQV-CC-INJ-F002F
E50-SQV-CC-INJ_4_6_8	7.94E-07	2.12E-04	266.28	CCF of three components: E50-SQV-CC-INJ-F002D & E50-SQV-CC-INJ-F002F & E50-SQV-C
E50-SQV-CC-INJ_4_7	2.38E-05	1.50E-05	1.62	CCF of two components: E50-SQV-CC-INJ-F002D & E50-SQV-CC-INJ-F002G
E50-SQV-CC-INJ_4_7_8	7.94E-07	2.12E-04	266.28	CCF of three components: E50-SQV-CC-INJ-F002D & E50-SQV-CC-INJ-F002G & E50-SQV-C
E50-SQV-CC-INJ_4_8	2.38E-05	7.61E-03	320.07	CCF of two components: E50-SQV-CC-INJ-F002D & E50-SQV-CC-INJ-F002H
E50-SQV-CC-INJ_5_6	2.38E-05	1.50E-05	1.62	CCF of two components: E50-SQV-CC-INJ-F002E & E50-SQV-CC-INJ-F002F
E50-SQV-CC-INJ_5_7	2.38E-05	1.50E-05	1.62	CCF of two components: E50-SQV-CC-INJ-F002E & E50-SQV-CC-INJ-F002G
E50-SQV-CC-INJ_5_8	2.38E-05	3.00E-05	2.23	CCF of two components: E50-SQV-CC-INJ-F002E & E50-SQV-CC-INJ-F002H
E50-SQV-CC-INJ_6_8	2.38E-05	1.50E-05	1.62	CCF of two components: E50-SQV-CC-INJ-F002F & E50-SQV-CC-INJ-F002H
E50-SQV-CC-INJ_7_8	2.38E-05	1.50E-05	1.62	CCF of two components: E50-SQV-CC-INJ-F002G & E50-SQV-CC-INJ-F002H
E50-SQV-CC-INJ_ALL	1.50E-04	4.93E-02	329.18	CCF of all components in group 'E50-SQV-CC-INJ'
E50-SQV-CC-INJ-F002A	3.00E-03	3.98E-03	2.32	SQUIB VALVE F002A FAILS TO OPERATE
E50-SQV-CC-INJ-F002D	3.00E-03	3.98E-03	2.32	SQUIB VALVE F002D FAILS TO OPERATE
E50-SQV-CC-INJ-F002E	3.00E-03	3.98E-03	2.32	SQUIB VALVE F002E FAILS TO OPERATE
E50-SQV-CC-INJ-F002H	3.00E-03	3.98E-03	2.32	SQUIB VALVE F002H FAILS TO OPERATE
E50-SQV-CO-F009A	9.60E-06	3.00E-03	312.96	SQUIB DELUGE VALVE F009A SPUR. OPENING [#7]
E50-SQV-CO-F009D	9.60E-06	3.00E-03	312.96	SQUIB DELUGE VALVE F009D SPUR. OPENING [#7]
E50-SQV-CO-F009E	9.60E-06	3.00E-03	312.96	SQUIB DELUGE VALVE F009E SPUR. OPENING [#7]

Table 13.7-5

Results - Internal Flooding Shutdown Importance Measure Report

F-V and RAW Importance Measures Report

(F-V = Fussell-Vesely Importance Measure; RAW = Risk Achievement Worth Importance Measure)

Flooding Shutdown

Core Damage Frequency = 5.21E-09

Event Name	Probability	Fus Ves	RAW	Description
E50-SQV-CO-F009H	9.60E-06	3.00E-03	312.96	SQUIB DELUGE VALVE F009H SPUR. OPENING [#7]
E50-SQV-CO-F009J	9.60E-06	3.00E-03	312.96	SQUIB DELUGE VALVE F009J SPUR. OPENING [#7]
E50-SQV-CO-F009M	9.60E-06	3.00E-03	312.96	SQUIB DELUGE VALVE F009M SPUR. OPENING [#7]
E50-STR-PG_ALL	1.20E-05	3.78E-03	314.72	CCF of all components in group 'E50-STR-PG'
E50-UV_-CC-EQU_ALL	1.72E-06	4.86E-04	282.5	CCF of all components in group 'E50-UV_-CC-EQU'
E50-UV_-CC-INJ_1_2_5	4.03E-07	1.00E-04	246.8	CCF of three components: E50-UV_-CC-INJ-F003A & E50-UV_-CC-INJ-F003B & E50-UV_-C
E50-UV_-CC-INJ_1_3_5	4.03E-07	1.00E-04	246.8	CCF of three components: E50-UV_-CC-INJ-F003A & E50-UV_-CC-INJ-F003C & E50-UV_-C
E50-UV_-CC-INJ_1_4_5	4.03E-07	1.00E-04	246.8	CCF of three components: E50-UV_-CC-INJ-F003A & E50-UV_-CC-INJ-F003D & E50-UV_-C
E50-UV_-CC-INJ_1_4_8	4.03E-07	1.00E-04	246.8	CCF of three components: E50-UV_-CC-INJ-F003A & E50-UV_-CC-INJ-F003D & E50-UV_-C
E50-UV_-CC-INJ_1_5	1.52E-07	2.83E-05	184.02	CCF of two components: E50-UV_-CC-INJ-F003A & E50-UV_-CC-INJ-F003E
E50-UV_-CC-INJ_1_5_6	4.03E-07	1.00E-04	246.8	CCF of three components: E50-UV_-CC-INJ-F003A & E50-UV_-CC-INJ-F003E & E50-UV_-C
E50-UV_-CC-INJ_1_5_7	4.03E-07	1.00E-04	246.8	CCF of three components: E50-UV_-CC-INJ-F003A & E50-UV_-CC-INJ-F003E & E50-UV_-C
E50-UV_-CC-INJ_1_5_8	4.03E-07	1.00E-04	246.8	CCF of three components: E50-UV_-CC-INJ-F003A & E50-UV_-CC-INJ-F003E & E50-UV_-C
E50-UV_-CC-INJ_2_4_8	4.03E-07	1.00E-04	246.8	CCF of three components: E50-UV_-CC-INJ-F003B & E50-UV_-CC-INJ-F003D & E50-UV_-C

Table 13.7-5

Results - Internal Flooding Shutdown Importance Measure Report

F-V and RAW Importance Measures Report

(F-V = Fussell-Vesely Importance Measure; RAW = Risk Achievement Worth Importance Measure)

Flooding Shutdown

Core Damage Frequency = 5.21E-09

Event Name	Probability	Fus Ves	RAW	Description
E50-UV_-CC-INJ_3_4_8	4.03E-07	1.00E-04	246.8	CCF of three components: E50-UV_-CC-INJ-F003C & E50-UV_-CC-INJ-F003D & E50-UV_-C
E50-UV_-CC-INJ_4_5_8	4.03E-07	1.00E-04	246.8	CCF of three components: E50-UV_-CC-INJ-F003D & E50-UV_-CC-INJ-F003E & E50-UV_-C
E50-UV_-CC-INJ_4_6_8	4.03E-07	1.00E-04	246.8	CCF of three components: E50-UV_-CC-INJ-F003D & E50-UV_-CC-INJ-F003F & E50-UV_-C
E50-UV_-CC-INJ_4_7_8	4.03E-07	1.00E-04	246.8	CCF of three components: E50-UV_-CC-INJ-F003D & E50-UV_-CC-INJ-F003G & E50-UV_-C
E50-UV_-CC-INJ_4_8	1.52E-07	2.83E-05	184.02	CCF of two components: E50-UV_-CC-INJ-F003D & E50-UV_-CC-INJ-F003H
E50-UV_-CC-INJ_ALL	1.72E-05	5.44E-03	317.27	CCF of all components in group 'E50-UV_-CC-INJ'
E50-UV_-CC-EQU_ALL	1.72E-06	4.86E-04	282.5	CCF of all components in group 'E50-UV_-CC-EQU'
E50-UV_-CC-INJ-F003A	1.00E-03	1.24E-03	2.23	INJECTION CHECK VALVE F003A FAILS TO OPEN
E50-UV_-CC-INJ-F003D	1.00E-03	1.24E-03	2.23	INJECTION CHECK VALVE F003D FAILS TO OPEN
E50-UV_-CC-INJ-F003E	1.00E-03	1.24E-03	2.23	INJECTION CHECK VALVE F003E FAILS TO OPEN
E50-UV_-CC-INJ-F003H	1.00E-03	1.24E-03	2.23	INJECTION CHECK VALVE F003H FAILS TO OPEN
E50-UV_-OC-INJ-F003A	4.80E-06	7.24E-07	1.15	INJECTION CHECK VALVE F003A FAILS TO REMAIN OPEN OR PLUG
E50-UV_-OC-INJ-F003D	4.80E-06	7.24E-07	1.15	INJECTION CHECK VALVE F003D FAILS TO REMAIN OPEN OR PLUG
E50-UV_-OC-INJ-F003E	4.80E-06	7.24E-07	1.15	INJECTION CHECK VALVE F003E FAILS TO REMAIN OPEN OR PLUG
E50-UV_-OC-INJ-F003H	4.80E-06	7.24E-07	1.15	INJECTION CHECK VALVE F003H FAILS TO REMAIN OPEN OR PLUG
G21-BV_-CC-F346	1.00E-04	9.58E-04	10.54	MANUAL VALVE FAILS TO OPEN

Table 13.7-5

Results - Internal Flooding Shutdown Importance Measure Report

F-V and RAW Importance Measures Report

(F-V = Fussell-Vesely Importance Measure; RAW = Risk Achievement Worth Importance Measure)

Flooding Shutdown

Core Damage Frequency = 5.21E-09

Event Name	Probability	Fus Ves	RAW	Description
G21-BV_-OC-F334	7.20E-07	2.73E-06	4.7	MANUAL VALVE F334 PLUGS-TRANSFERS CLOSED
G21-HX_-LK-B001A	2.40E-05	3.63E-05	2.5	HEAT EXCHANGER B001A FAILS WHILE OPERATING
G21-HX_-LK-B001B	2.40E-05	3.63E-05	2.5	HEAT EXCHANGER B001B FAILS WHILE OPERATING
G21-MOV-CC_ALL	1.45E-04	2.59E-05	1.17	CCF of all components in group 'G21-MOV-CC'
G21-MOV-CC-2_1_2	4.44E-04	7.46E-03	17.73	CCF of two components: G21-MOV-CC-F332A & G21-MOV-CC-F332B
G21-MOV-CC-F011A	4.00E-03	3.76E-04	1.09	MOTOR OPER. VALVE F011A FAILS TO OPEN
G21-MOV-CC-F013A	4.00E-03	3.76E-04	1.09	MOTOR OPER. VALVE F013A FAILS TO OPEN
G21-MOV-CC-F014A	4.00E-03	3.76E-04	1.09	MOTOR OPER. VALVE F014A FAILS TO OPEN
G21-MOV-CC-F332A	4.00E-03	2.77E-04	1.07	MOTOR OPERATED VALVE FAILS TO OPEN
G21-MOV-CC-F332B	4.00E-03	2.77E-04	1.07	MOTOR OPERATED VALVE FAILS TO OPEN
G21-MOV-OO-F003A	4.00E-03	3.76E-04	1.09	MOTOR OPERATED VALVE F003A FAILS TO CLOSE
G21-MOV-OO-F008A	4.00E-03	3.76E-04	1.09	MOTOR OPER. VALVE F008A FAILS TO CLOSE
G21-MP_-FR_1_2	3.96E-05	2.64E-06	1.06	CCF of two components: G21-MP_-FR-C001A & G21-MP_-FR-C001B
G21-MP_-FR-C001A	6.00E-04	3.83E-05	1.06	MOTOR-DRIVEN PUMP C001A FAILS TO RUN
G21-MP_-FR-PLP	6.00E-04	6.08E-03	11.11	MOTOR-DRIVEN LPI PUMP FAILS TO RUN
G21-MP_-FS-PLP	2.00E-03	2.05E-02	11.22	MOTOR-DRIVEN LPI PUMP FAILS TO START
G21-NSC-TM-F332A	1.50E-03	8.03E-05	1.05	MAINTENANCE FOR VALVE F332A
G21-NSC-TM-F332B	1.50E-03	8.03E-05	1.05	MAINTENANCE FOR VALVE F332B
G21-NST-TM-TRAINB	9.00E-03	1.09E-05	1	TRAIN B IN MAINTENANCE

Table 13.7-5

Results - Internal Flooding Shutdown Importance Measure Report

F-V and RAW Importance Measures Report

(F-V = Fussell-Vesely Importance Measure; RAW = Risk Achievement Worth Importance Measure)

Flooding Shutdown

Core Damage Frequency = 5.21E-09

Event Name	Probability	Fus Ves	RAW	Description
G21-STR-PG-SPPLUG	2.40E-04	5.64E-05	1.23	FILTER/STRAINER IN SP PLUG
G21-UV_-CC-A_1_2	2.99E-06	2.41E-05	8.89	CCF of two components: G21-UV_-CC-F333A & G21-UV_-CC-F333B
G21-UV_-CC-F347	1.00E-04	9.58E-04	10.54	CHECK VALVE F347 FAILS TO OPEN
G21-UV_-CC-FU438	1.00E-04	9.58E-04	10.54	LPI DISCHARGE CHECK VALVE FAILS TO OPEN
G21-UV_-OO-F331A	1.00E-03	1.02E-02	11.17	CHECK VALVE F331A FAILS TO CLOSE
G21-UV_-OO-F331B	1.00E-03	1.02E-02	11.17	CHECK VALVE F331B FAILS TO CLOSE
G21-XHE-FO-LPCI	1.61E-03	7.45E-04	1.46	OPERATOR FAILS TO ALIGN AND ACTUATE FAPCS IN LPCI MODE
G31-HX_-LK-B002A	2.40E-05	3.63E-05	2.5	HEAT EXCHANGER 2A FOR RWCU/SDCS FAILS WHILE OPERATING
G31-HX_-LK-B002B	2.40E-05	3.63E-05	2.5	HEAT EXCHANGER B FOR RWCU/SDCS FAILS WHILE OPERATING
G31-UV_-OO_1_2	5.26E-05	2.56E-04	5.82	CCF of two components: G31-UV_-OO-F023A & G31-UV_-OO-F024A
G31-UV_-OO-F023A	1.00E-03	2.60E-06	1	CHECK VALVE F023A FAILS TO PREVENT BACKFLOW INTO RWCU/SDC
G31-UV_-OO-F024A	1.00E-03	2.60E-06	1	CHECK VALVE F024A FAILS TO PREVENT BACKFLOW INTO RWCU/SDC
MS-TOP2	5.00E-02	2.93E-01	6.56	TWO DPVs FAIL TO OPEN (MANUAL)
N21-ACV-OC-F0018	2.40E-05	4.89E-05	3.03	AIR OPERATED VALVE N21-F018 FAILS TO REMAIN OPEN
N21-AHU-FR-COND_1_2	1.26E-05	2.48E-05	2.96	CCF of two components: N21-AHU-FR-CONDA & N21-AHU-FR-CONDB
N21-AHU-FR-CONDA	2.40E-04	2.39E-06	1.01	AIR HANDLING UNIT COND PUMP ROOM TRAIN A FAILS TO RUN
N21-AHU-FS-CONDB	6.00E-03	2.39E-06	1	AIR HANDLING UNIT COND PUMP ROOM TRAIN B FAILS TO START
N21-MP_-FR-COND_ALL	1.42E-05	2.79E-05	2.96	CCF of all components in group 'N21-MP_-FR-COND'

Table 13.7-5

Results - Internal Flooding Shutdown Importance Measure Report

F-V and RAW Importance Measures Report

(F-V = Fussell-Vesely Importance Measure; RAW = Risk Achievement Worth Importance Measure)

Flooding Shutdown

Core Damage Frequency = 5.21E-09

Event Name	Probability	Fus Ves	RAW	Description
N21-STR-PG_ALL	5.68E-06	1.06E-05	2.85	CCF of all components in group 'N21-STR-PG'
NICWSA-SYS-FAILS	1.00E-03	1.91E-03	2.9	NUCLEAR ISLAND CHILLED WATER SUBSYSTEM TRAIN A FAILS
NICWSB-SYS-FAILS	1.00E-03	1.90E-03	2.9	NUCLEAR ISLAND CHILLED WATER SUBSYSTEM TRAIN B FAILS
P21-ACV-CC-F0023_1_2	1.93E-04	1.80E-04	1.92	CCF of two components: P21-ACV-CC-F0023A & P21-ACV-CC-F0023B
P21-ACV-CC-F0023A	2.00E-03	5.65E-05	1.03	AIR OPERATED VALVE F0023A FAILS TO OPEN
P21-ACV-CC-F0023B	2.00E-03	3.89E-05	1.02	AIR OPERATED VALVE F0023B FAILS TO OPEN
P21-ACV-OO-F0004	2.00E-03	2.10E-03	2.05	AIR OPERATED VALVE F0004 FAILS TO CLOSE
P21-ACV-OO-F0016_1_2	1.93E-04	2.99E-03	16.42	CCF of two components: P21-ACV-OO-F016A & P21-ACV-OO-F016B
P21-ACV-OO-F0027	2.00E-03	2.10E-03	2.05	AIR OPERATED VALVE F0027 FAILS TO CLOSE
P21-ACV-OO-F0061	2.00E-03	2.10E-03	2.05	AIR OPERATED VALVE F0061 FAILS TO CLOSE
P21-ACV-OO-F016A	2.00E-03	9.53E-05	1.05	AIR OPERATED VALVE F016A FAILS TO CLOSE
P21-ACV-OO-F016B	2.00E-03	7.77E-05	1.04	AIR OPERATED VALVE F016B FAILS TO CLOSE
P21-ACV-OO-XTIE_1_2	5.92E-06	2.05E-06	1.33	CCF of two components: P21-ACV-OO-F0004 & P21-ACV-OO-F0027
P21-ACV-OO-XTIE_1_2_3	1.57E-04	1.43E-04	1.9	CCF of three components: P21-ACV-OO-F0004 & P21-ACV-OO-F0027 & P21-ACV-OO-F0061
P21-ACV-OO-XTIE_1_3	5.92E-06	2.05E-06	1.33	CCF of two components: P21-ACV-OO-F0004 & P21-ACV-OO-F0061
P21-ACV-OO-XTIE_2_3	5.92E-06	2.05E-06	1.33	CCF of two components: P21-ACV-OO-F0027 & P21-ACV-OO-F0061
P21-AHU-FR_1_2	1.26E-05	1.46E-04	12.45	CCF of two components: P21-AHU-FR-RCCWA & P21-AHU-FR-RCCWB
P21-AHU-FR-RCCWA	2.40E-04	4.31E-04	2.79	AIR HANDLING UNIT RCCWS ROOM A FAILS TO RUN
P21-AHU-FR-RCCWB	2.40E-04	4.31E-04	2.79	AIR HANDLING UNIT RCCWS ROOM TRAIN B FAILS TO RUN

Table 13.7-5

Results - Internal Flooding Shutdown Importance Measure Report

F-V and RAW Importance Measures Report

(F-V = Fussell-Vesely Importance Measure; RAW = Risk Achievement Worth Importance Measure)

Flooding Shutdown

Core Damage Frequency = 5.21E-09

Event Name	Probability	Fus Ves	RAW	Description
P21-AHU-FS_1_2	6.67E-04	6.74E-04	2.01	CCF of two components: P21-AHU-FS-RCCWA & P21-AHU-FS-RCCWB
P21-AHU-FS-RCCWA	6.00E-03	3.07E-04	1.05	AIR HANDLING UNIT RCCWS ROOM A FAILS TO START
P21-AHU-FS-RCCWB	6.00E-03	2.26E-04	1.04	AIR HANDLING UNIT RCCWS ROOM B FAILS TO START
P21-HX_-LK-B001A	2.40E-05	3.63E-05	2.5	HEAT EXCHANGER B001A FAILS WHILE OPERATING
P21-HX_-LK-B001B	2.40E-05	3.63E-05	2.5	HEAT EXCHANGER B001B FAILS WHILE OPERATING
P21-HX_-LK-B002A	2.40E-05	3.63E-05	2.5	HEAT EXCHANGER FAILURE (LEAK OR RUPTURE)
P21-HX_-LK-B002B	2.40E-05	3.63E-05	2.5	HEAT EXCHANGER B002B FAILS WHILE OPERATING
P21-HX_-LK-B003A	2.40E-05	3.63E-05	2.5	HEAT EXCHANGER (LEAK OR RUPTURE)
P21-HX_-LK-B003B	2.40E-05	3.63E-05	2.5	HEAT EXCHANGER B003B FAILS WHILE OPERATING
P21-MOV-CC_ALL	1.48E-04	1.34E-04	1.9	CCF of all components in group 'P21-MOV-CC'
P21-MP_-FR_ALL	1.33E-05	1.56E-04	12.61	CCF of all components in group 'P21-MP_-FR'
P21-MP_-FS_ALL	1.56E-04	1.41E-04	1.9	CCF of all components in group 'P21-MP_-FS'
P21-MPC-FR-C001A	6.00E-04	1.09E-03	2.82	MOTOR DRIVEN PUMP C001A FAILS TO RUN
P21-MPC-FR-C001B	6.00E-04	1.09E-03	2.82	MOTOR DRIVEN PUMP C001B FAILS TO RUN
P21-NSC-TM-TRAINAHX	7.50E-05	8.48E-06	1.11	RCCW HXS IN TEST OR MAINTENANCE TRAIN A
P21-NSC-TM-TRAINAPUMP	7.50E-05	8.48E-06	1.11	RCCW PUMPS IN TEST OR MAINTENANCE TRAIN A
P21-NSC-TM-TRAINBHX	7.50E-05	4.18E-06	1.05	RCCW HXS IN TEST OR MAINTENANCE TRAIN B

Table 13.7-5

Results - Internal Flooding Shutdown Importance Measure Report

F-V and RAW Importance Measures Report

(F-V = Fussell-Vesely Importance Measure; RAW = Risk Achievement Worth Importance Measure)

Flooding Shutdown

Core Damage Frequency = 5.21E-09

Event Name	Probability	Fus Ves	RAW	Description
P21-NSC-TM-TRAINBPUMP	7.50E-05	4.18E-06	1.05	RCCW PUMPS IN TEST OR MAINTENANCE TRAIN B
P22-ACV-CO-F0008	7.20E-07	1.02E-06	2.36	TCCW HX BYPASS VALVE FAILS TO REMAIN CLOSED
P22-ACV-OC-F0006	2.40E-05	4.89E-05	3.03	TCCW HX FLOW CONTROL VALVE FAILS TO REMAIN OPEN
P22-HX_-PG-B001A	2.40E-05	1.43E-05	1.59	HEAT EXCHANGER 1A FAILS
P22-HX_-PG-B001B	2.40E-05	1.43E-05	1.59	HEAT EXCHANGER 1B FAILS
P22-MOV-OC-F0005A	3.36E-06	1.19E-06	1.34	MOV FOR HX 1A FAILS TO REMAIN OPEN
P22-MOV-OC-F0005B	3.36E-06	1.19E-06	1.34	MOV FOR HX 1B FAILS TO REMAIN OPEN
P22-MP_-FR_1_2	4.26E-06	7.76E-06	2.81	CCF of two components: P22-MPC-FR-C001A & P22-MPC-FR-C001B
P22-MP_-FR_1_2_3	3.48E-06	6.35E-06	2.81	CCF of three components: P22-MPC-FR-C001A & P22-MPC-FR-C001B & P22-MPC-FR-C001C
P22-MP_-FR_1_3	4.26E-06	7.76E-06	2.81	CCF of two components: P22-MPC-FR-C001A & P22-MPC-FR-C001C
P22-MP_-FR_2_3	4.26E-06	7.76E-06	2.81	CCF of two components: P22-MPC-FR-C001B & P22-MPC-FR-C001C
P22-MPC-FR-C001A	6.00E-04	1.48E-05	1.02	MOTOR-DRIVEN PUMP A FOR TCCW FAILS TO RUN, GIVEN START
P22-MPC-FR-C001B	6.00E-04	1.41E-05	1.02	MOTOR-DRIVEN PUMP B FOR TCCW FAILS TO RUN, GIVEN START
P22-MPC-FR-C001C	6.00E-04	1.45E-06	1	MOTOR-DRIVEN PUMP C FOR TCCW FAILS TO RUN, GIVEN START
P22-MPC-FS-C001C	2.00E-03	7.33E-06	1	TCCW MOTOR-DRIVEN PUMP 1C FAILS TO START
P22-NSC-TM-C001C	1.50E-03	5.11E-06	1	TCCW PUMP C IN MAINTENANCE
P22-NSC-TM-HXS	7.50E-05	1.55E-04	3.07	MULTIPLE TCCW HXS OUT FOR TESTING/ MAINTENANCE
P22-NSC-TM-PUMPS	7.50E-05	1.55E-04	3.07	MULTIPLE TCCW PUMPS OUT FOR TESTING/ MAINTENANCE

Table 13.7-5

Results - Internal Flooding Shutdown Importance Measure Report

F-V and RAW Importance Measures Report

(F-V = Fussell-Vesely Importance Measure; RAW = Risk Achievement Worth Importance Measure)

Flooding Shutdown

Core Damage Frequency = 5.21E-09

Event Name	Probability	Fus Ves	RAW	Description
P22-TNK-RP-A001	2.40E-06	4.43E-06	2.81	TCCW SURGE TANK LEAKS CATASTROPHICALLY
P22-TRN-RE-PUMP1C	8.07E-03	3.32E-05	1	FAILURE TO RESTORE TCCW PUMP 1C
P22-UV_-OO-F034A	1.00E-03	8.52E-07	1	CHECK VALVE F034A FAILS TO CLOSE
P22-UV_-OO-F034B	1.00E-03	1.87E-06	1	CHECK VALVE F034B FAILS TO CLOSE
P22-XHE-FO-HX	1.63E-01	3.10E-05	1	FAILURE TO ALIGN TCCW HX
P41-ACV-CC_ALL	1.21E-04	1.07E-04	1.87	CCF of all components in group 'P41-ACV-CC'
P41-ACV-OC-F001A	2.40E-05	1.43E-05	1.59	VALVE P22-F001A FAILS TO REMAIN OPEN
P41-ACV-OC-F001B	2.40E-05	1.43E-05	1.59	VALVE P41-F001B FAILS TO REMAIN OPEN
P41-FAN-FR_1_2	4.44E-06	3.95E-05	9.69	CCF of two components: P41-FAN-FR-0001A & P41-FAN-FR-0001B
P41-FAN-FR_1_2_3	4.44E-07	4.69E-07	2.05	CCF of three components: P41-FAN-FR-0001A & P41-FAN-FR-0001B & P41-FAN-FR-0002A
P41-FAN-FR_1_2_4	4.44E-07	4.69E-07	2.05	CCF of three components: P41-FAN-FR-0001A & P41-FAN-FR-0001B & P41-FAN-FR-0002B
P41-FAN-FR_1_3_4	4.44E-07	4.69E-07	2.05	CCF of three components: P41-FAN-FR-0001A & P41-FAN-FR-0002A & P41-FAN-FR-0002B
P41-FAN-FR_1_4	4.44E-06	3.95E-05	9.69	CCF of two components: P41-FAN-FR-0001A & P41-FAN-FR-0002B
P41-FAN-FR_2_3	4.44E-06	3.95E-05	9.69	CCF of two components: P41-FAN-FR-0001B & P41-FAN-FR-0002A
P41-FAN-FR_2_3_4	4.44E-07	4.69E-07	2.05	CCF of three components: P41-FAN-FR-0001B & P41-FAN-FR-0002A & P41-FAN-FR-0002B
P41-FAN-FR_3_4	4.44E-06	3.95E-05	9.69	CCF of two components: P41-FAN-FR-0002A & P41-FAN-FR-0002B

Table 13.7-5

Results - Internal Flooding Shutdown Importance Measure Report

F-V and RAW Importance Measures Report

(F-V = Fussell-Vesely Importance Measure; RAW = Risk Achievement Worth Importance Measure)

Flooding Shutdown

Core Damage Frequency = 5.21E-09

Event Name	Probability	Fus Ves	RAW	Description
P41-FAN-FR_ALL	1.20E-05	1.37E-04	12.27	CCF of all components in group 'P41-FAN-FR'
P41-FAN-FS-0001B	6.00E-04	3.83E-07	1	MECHANICAL DRAFT COOLING TOWER FAN 1B FAILS TO START
P41-FAN-FS-0002B	6.00E-04	3.83E-07	1	MECHANICAL DRAFT COOLING TOWER FAN 2B FAILS TO START
P41-MOV-CC-PMPF004A	4.00E-03	4.53E-05	1.01	MOTOR OPERATED VALVE MV-F004A FAILS TO OPEN
P41-MOV-CC-PMPF004B	4.00E-03	4.53E-05	1.01	MOTOR OPERATED VALVE F004B FAILS TO OPEN
P41-MOV-OC-F008A	3.36E-06	1.19E-06	1.34	VALVE P41-F008A FAILS TO REMAIN OPEN
P41-MOV-OC-F008B	3.36E-06	1.19E-06	1.34	VALVE P41-F008B FAILS TO REMAIN OPEN
P41-MPW-FR_ALL	3.20E-06	2.40E-05	8.36	CCF of all components in group 'P41-MPW-FR'
P41-MPW-FR-C001A	6.00E-04	1.45E-06	1	MOTOR DRIVEN PUMP C001A FAILS TO RUN
P41-MPW-FR-C001B	6.00E-04	1.45E-06	1	MOTOR DRIVEN PUMP C001B FAILS TO RUN,
P41-MPW-FR-C002A	6.00E-04	1.45E-06	1	MOTOR DRIVEN PUMP C002A FAILS TO RUN
P41-MPW-FR-C002B	6.00E-04	1.45E-06	1	MOTOR-DRIVEN PUMP C002B FAILS TO RUN
P41-MPW-FS-C002A	2.00E-03	1.78E-05	1.01	MOTOR-DRIVEN PUMP C002A FAILS TO START
P41-MPW-FS-C002B	2.00E-03	1.78E-05	1.01	MOTOR-DRIVEN PUMP C002B FAILS TO START
P41-NSC-TM-C002A	1.50E-03	1.12E-05	1.01	PUMP C002A IN MAINTENANCE
P41-NSC-TM-C002B	1.50E-03	1.12E-05	1.01	PUMP C002B IN MAINTENANCE
P41-STR-PG_1_2_3	2.11E-07	2.13E-07	2.01	CCF of three components: P41-STR-PG-D01A & P41-STR-PG-D01B & P41-STR-PG-D02A

Table 13.7-5

Results - Internal Flooding Shutdown Importance Measure Report

F-V and RAW Importance Measures Report

(F-V = Fussell-Vesely Importance Measure; RAW = Risk Achievement Worth Importance Measure)

Flooding Shutdown

Core Damage Frequency = 5.21E-09

Event Name	Probability	Fus Ves	RAW	Description
P41-STR-PG_1_2_4	2.11E-07	2.13E-07	2.01	CCF of three components: P41-STR-PG-D01A & P41-STR-PG-D01B & P41-STR-PG-D02B
P41-STR-PG_1_3_4	2.11E-07	2.13E-07	2.01	CCF of three components: P41-STR-PG-D01A & P41-STR-PG-D02A & P41-STR-PG-D02B
P41-STR-PG_2_3_4	2.11E-07	2.13E-07	2.01	CCF of three components: P41-STR-PG-D01B & P41-STR-PG-D02A & P41-STR-PG-D02B
P41-STR-PG_ALL	5.68E-06	5.45E-05	10.45	CCF of all components in group 'P41-STR-PG'
P41-STR-PG-D01A	2.40E-04	2.56E-07	1	STRAINER P41-D001A PLUGGED
P41-STR-PG-D01B	2.40E-04	2.56E-07	1	STRAINER P41-D001B PLUGGED
P41-STR-PG-D02A	2.40E-04	2.56E-07	1	STRAINER P41-D002A PLUGGED
P41-STR-PG-D02B	2.40E-04	2.56E-07	1	STRAINER P41-D002B PLUGGED
P41-SYS-FC-HVACPSW-A	1.00E-03	1.46E-04	1.14	PSW-A ROOM COOLING FAILURE
P41-SYS-FC-HVACPSW-B	1.00E-03	1.46E-04	1.14	PSW-B ROOM COOLING FAILURE
P41-TRN-RE-PUMP2A	8.07E-03	1.10E-04	1.01	FAILURE TO RESTORE PSW PUMP 2A
P41-TRN-RE-PUMP2B	8.07E-03	1.10E-04	1.01	FAILURE TO RESTORE PSW PUMP 2B
P41-XHE-FO-TCCWHX	1.63E-01	3.10E-05	1	FAILURE TO MANUALLY ALIGN STANDBY TCCW HX
P51-CMP-FR-0001-A	2.40E-03	6.69E-06	1	MOTOR-DRIVEN AIR COMPRESSOR 0001-A FAILS TO RUN
P51-CMP-FR-CCF_1_2	2.10E-05	5.97E-07	1.03	CCF of two components: P51-CMP-FR-0001-A & P51-CMP-FR-0001-B
P51-CMP-FR-CCF_ALL	5.68E-05	1.17E-04	3.06	CCF of all components in group 'P51-CMP-FR-CCF'

Table 13.7-5

Results - Internal Flooding Shutdown Importance Measure Report

F-V and RAW Importance Measures Report

(F-V = Fussell-Vesely Importance Measure; RAW = Risk Achievement Worth Importance Measure)

Flooding Shutdown

Core Damage Frequency = 5.21E-09

Event Name	Probability	Fus Ves	RAW	Description
P51-CMP-FS-0001-B	2.00E-02	2.34E-06	1	MOTOR-DRIVEN AIR COMPRESS. 0001-B FAILS TO START
P51-CMP-FS-0001-D	2.00E-02	2.56E-07	1	MOTOR-DRIVEN AIR COMPRESS. 0001-D FAILS TO START
P51-CMP-FS-CCF_2_4	3.70E-04	2.56E-07	1	CCF of two components: P51-CMP-FS-0001-B & P51-CMP-FS-0001-D
P51-CMP-FS-CCF_ALL	1.00E-03	5.28E-06	1.01	CCF of all components in group 'P51-CMP-FS-CCF'
P51-CMP-RE-0001-B	8.07E-03	3.83E-07	1	SERVICE AIR SYSTEM COMPRESSOR RESTORATION ERROR
P51-NST-TM-CMP0001-CD	9.00E-03	6.82E-07	1	BACKUP COMPRESSOR IN TEST OR MAINTENANCE
P51-XHE-FO-0001-CD	1.77E-02	2.39E-06	1	OPERATOR FAILS TO ALIGN ONE BACKUP CMP TO STANDBY
P52-ACV_OC-0001-A	2.40E-05	4.69E-07	1.02	AOV FAILS TO REMAIN OPEN
P52-BV_-OC-0008	7.20E-07	1.02E-06	2.36	MANUAL VALVE TRANSFERS CLOSED
P52-FLT-PG-CCF_1_2	1.26E-05	2.56E-07	1.02	CCF of two components: P52-FLT-PG-DRY-0001-A & P52-FLT-PG-DRY-0001-B
P52-FLT-PG-DRY-0001-A	2.40E-04	7.76E-06	1.03	DRYER 0001-A PLUGGED
P52-XHE-CC-0001-B	1.77E-02	3.03E-05	1	OPERATOR FAILS TO OPEN STANDBY TRAIN AOV 0001-B
R10-MCB-CO-UATA	1.44E-05	1.98E-05	2.35	MEDIUM VOLTAGE CIRCUIT BREAKER ON UAT A OPENS SPURIOUSLY
R10-MCB-CO-UATB	1.44E-05	1.98E-05	2.35	MEDIUM VOLTAGE CIRCUIT BREAKER ON UAT B OPENS SPURIOUSLY
R10-SYS-FF-230KV	1.00E-03	1.66E-06	1	230 KV SWITCHYARD FAILS DURING OPEATION
R10-SYS-FF-500KV	1.00E-03	1.89E-03	2.88	500KV SWITCHYARD FAILS DURING OPERATION
R10-SYS-TM-230KV	1.00E-02	1.97E-05	1	230 KV SWITCHYARD IN MAINTENANCE
R10-XFH-LP-CCF_ALL	6.82E-07	9.80E-07	2.37	CCF of all components in group 'R10-XFH-LP-CCF'

Table 13.7-5

Results - Internal Flooding Shutdown Importance Measure Report

F-V and RAW Importance Measures Report

(F-V = Fussell-Vesely Importance Measure; RAW = Risk Achievement Worth Importance Measure)

Flooding Shutdown

Core Damage Frequency = 5.21E-09

Event Name	Probability	Fus Ves	RAW	Description
R10-XFH-LP-UATA	2.88E-05	4.46E-05	2.54	TRANSFORMER (HIGH VOLTAGE) UAT A FAILS TO CONTINUE OPERATING
R10-XFH-LP-UATB	2.88E-05	4.46E-05	2.54	TRANSFORMER (HIGH VOLTAGE) UAT B FAILS TO CONTINUE OPERATING
R10-XFH-TM-UATA	1.00E-04	1.73E-04	2.71	TRANSFORMER (HIGH VOLTAGE) UAT A IN MAINTENANCE
R10-XFH-TM-UATB	1.00E-04	1.73E-04	2.71	TRANSFORMER (HIGH VOLTAGE) UAT B IN MAINTENANCE
R11-BAC-LP-100A3	4.80E-06	2.24E-05	5.58	6.9 KV AC PIP-A LOADS BUS 1000A3 FAILS DURING OPERATION
R11-BAC-LP-100B3	4.80E-06	2.24E-05	5.58	6.9 KV AC PIP-A LOADS BUS 1000B3 FAILS DURING OPERATION
R11-BAC-LP-PIP_1_2	2.53E-07	2.56E-07	2.01	CCF of two components: R11-BAC-LP-100A3 & R11-BAC-LP-100B3
R11-BAC-TM-100A3	4.80E-06	2.24E-05	5.58	6.9 KV AC PIP-A LOADS BUS 1000A3 IN MAINTENANCE
R11-BAC-TM-100B3	4.80E-06	2.24E-05	5.58	6.9 KV AC PIP-A LOADS BUS 1000B3 IN MAINTENANCE
R11-MCB-CC-A3UATAY	4.00E-03	1.37E-05	1	MEDIUM VOLTAGE CIRCUIT BREAKER FOR UAT A Y-WINDING FAILS TO OPEN
R11-MCB-CC-B3UATBY	4.00E-03	1.37E-05	1	MEDIUM VOLTAGE CIRCUIT BREAKER FOR UAT B Y-WINDING FAILS TO OPEN
R11-MCB-CC-CCFNORM_ALL	2.00E-04	2.13E-07	1	CCF of all components in group 'R11-MCB-CC-CCFNORM'
R11-MCB-CO-A3UATAY	1.44E-05	1.98E-05	2.35	MEDIUM VOLTAGE CIRCUIT BREAKER FOR UAT A Y-WINDING OPENS SPURIOUSLY
R11-MCB-CO-B3UATBY	1.44E-05	1.98E-05	2.35	MEDIUM VOLTAGE CIRCUIT BREAKER FOR UAT B Y-WINDING OPENS SPURIOUSLY
R11-RE_-FO-UV00A3	8.75E-04	1.87E-06	1	1000A3 UV RELAY FAILS TO OPERATE ON UV COND
R11-RE_-FO-UV00B3	8.75E-04	1.87E-06	1	1000B3 UV RELAY FAILS TO OPERATE ON UV COND

Table 13.7-5

Results - Internal Flooding Shutdown Importance Measure Report

F-V and RAW Importance Measures Report (F-V = Fussell-Vesely Importance Measure; RAW = Risk Achievement Worth Importance Measure) Flooding Shutdown Core Damage Frequency = 5.21E-09				
Event Name	**Probability**	**Fus Ves**	**RAW**	**Description**
R12-BAC-LP-A2-02A	4.80E-06	1.67E-05	4.44	480 VAC BUS A2-02A FAILS DURING OPERATION
R12-BAC-LP-B2-02B	4.80E-06	1.67E-05	4.44	480 VAC BUS B2-02B FAILS DURING OPERATION
R12-BAC-LP-TB1-A	4.80E-06	5.62E-06	2.14	480 VAC TURBINE BLDG POWER CENTER 1-A FAILS DURING OPERATION
R12-BAC-LP-TB1-B	4.80E-06	5.62E-06	2.14	480 VAC TURBINE BLDG POWER CENTER 1-B FAILS DURING OPERATION
R12-BAC-TM-A2-02A	4.80E-06	1.67E-05	4.44	480 VAC BUS A2-02A IN MAINTENANCE
R12-BAC-TM-B2-02B	4.80E-06	1.67E-05	4.44	480 VAC BUS B2-02B IN MAINTENANCE
R12-BAC-TM-TB1-A	4.80E-06	5.62E-06	2.14	480 VAC TURBINE BLDG POWER CENTER 1-A IN MAINTENANCE
R12-BAC-TM-TB1-B	4.80E-06	5.62E-06	2.14	480 VAC TURBINE BLDG POWER CENTER 1-B IN MAINTENANCE
R12-LCB-CO-BO14A	1.20E-05	1.53E-05	2.26	R12-TB1-A XMFR OUTPUT CIRCUIT BREAKER TO BUS R12-TB1-A OPEN SPURIOUSLY
R12-LCB-CO-BO14B	1.20E-05	1.51E-05	2.24	R12-TB1-B XMFR OUTPUT CIRCUIT BREAKER TO BUS R12-TB1-B OPEN SPURIOUSLY
R12-LCB-CO-BOA2-02A	1.20E-05	4.95E-05	5.09	R12-A2-02A XMFR OUTPUT CIRCUIT BREAKER TO BUS R12-A2-02A OPEN SPURIOUSLY
R12-LCB-CO-BOB2-02B	1.20E-05	4.95E-05	5.09	R12-B2-02B XMFR OUTPUT CIRCUIT BREAKER TO BUS R12-B2-02B OPEN SPURIOUSLY
R12-MCB-CO-BI14A	1.44E-05	2.00E-05	2.37	R12-TB1-A XMFR INPUT CIRCUIT BREAKER FROM PIP BUS 1000A3 OPENS SPURIOUSLY
R12-MCB-CO-BI14B	1.44E-05	1.98E-05	2.35	R12-TB1-B XMFR INPUT CIRCUIT BREAKER FROM PIP BUS 1000B3 OPENS SPURIOUSLY

Table 13.7-5

Results - Internal Flooding Shutdown Importance Measure Report

F-V and RAW Importance Measures Report

(F-V = Fussell-Vesely Importance Measure; RAW = Risk Achievement Worth Importance Measure)

Flooding Shutdown

Core Damage Frequency = 5.21E-09

Event Name	Probability	Fus Ves	RAW	Description
R12-MCB-CO-BIA2-02A	1.44E-05	6.01E-05	5.14	R12-A2-02A XMFR INPUT CIRCUIT BREAKER FROM PIP BUS 1000A3 OPENS SPURIOUSLY
R12-MCB-CO-BIB2-02B	1.44E-05	6.01E-05	5.14	R12-B2-02B XMFR INPUT CIRCUIT BREAKER FROM PIP BUS 1000B3 OPENS SPURIOUSLY
R12-XFL-LP-X014A	1.92E-05	2.83E-05	2.46	R12-TB1-A XMFR FROM PIP BUS 1000A3 FAILS TO OPERATE
R12-XFL-LP-X014B	1.92E-05	2.79E-05	2.44	R12-TB1-B XMFR FROM PIP BUS 1000B3 FAILS TO OPERATE
R12-XFL-LP-XA2-02A	1.92E-05	8.25E-05	5.26	R12-A2-02A XMFR FROM PIP BUS 1000A3 FAILS TO OPERATE
R12-XFL-LP-XB2-02B	1.92E-05	8.25E-05	5.26	R12-B2-02B XMFR FROM PIP BUS 1000B3 FAILS TO OPERATE
R13-INV-FC-CCFSR_ALL	1.14E-05	7.41E-03	651.57	CCF of all components in group 'R13-INV-FC-CCFSR'
R13-XFL-LP-CCFNSR2_ALL	4.55E-07	4.69E-07	2.03	CCF of all components in group 'R13-XFL-LP-CCFNSR2'
R16-BDC-LP-R16A3	4.80E-06	8.91E-06	2.84	DC BUS R16-A3 FAILS DURING OPERATION
R16-BDC-TM-R16A3	5.00E-04	1.05E-03	3.1	DC BUS R16-A3 IN MAINTENANCE
R16-BDC-TM-R16B3	5.00E-04	1.65E-05	1.03	DC BUS R16-B3 IN MAINTENANCE
R16-BT_-LP-CCFA3B3_1_2	1.43E-06	2.39E-06	2.63	CCF of two components: R16-BT_-LP-R16BTA3 & R16-BT_-LP-R16BTB3
R16-BT_-LP-CCFSR_ALL	8.14E-07	4.68E-04	570.78	CCF of all components in group 'R16-BT_-LP-CCFSR'
R16-BT_-LP-R16BTA3	4.80E-05	9.90E-05	3.06	BATTERY R16-BTA3 FAILS TO PROVIDE OUTPUT
R16-BT_-LP-R16BTB3	4.80E-05	4.26E-07	1.01	BATTERY R16-BTB3 FAILS TO PROVIDE OUTPUT

Table 13.7-5

Results - Internal Flooding Shutdown Importance Measure Report

F-V and RAW Importance Measures Report

(F-V = Fussell-Vesely Importance Measure; RAW = Risk Achievement Worth Importance Measure)

Flooding Shutdown

Core Damage Frequency = 5.21E-09

Event Name	Probability	Fus Ves	RAW	Description
R16-BT_-TM-R16BTA3	5.00E-04	1.05E-03	3.1	BATTERY R16-BTA3 IN TEST AND MAINTENANCE
R16-BT_-TM-R16BTB3	5.00E-04	1.65E-05	1.03	BATTERY R16-BTB3 IN TEST AND MAINTENANCE
R16-LCB-CO-FROMR16BTA3	1.20E-05	2.36E-05	2.96	CIRCUIT BREAKER FROM R16-BTA3 OPENS SPURIOUSLY
R16-LCB-CO-R16A3SWGR1	1.20E-05	2.36E-05	2.96	CIRCUIT BREAKER 1 FROM R16-A3 OPENS SPURIOUSLY
R16-LCB-CO-R16A3SWGR2	1.20E-05	2.36E-05	2.96	CIRCUIT BREAKER 2 FROM R16-A3 OPENS SPURIOUSLY
R16-BT_-LP-R16BTA3	4.80E-05	9.90E-05	3.06	BATTERY R16-BTA3 FAILS TO PROVIDE OUTPUT
R16-BT_-LP-R16BTB3	4.80E-05	4.26E-07	1.01	BATTERY R16-BTB3 FAILS TO PROVIDE OUTPUT
R16-BT_-TM-R16BTA3	5.00E-04	1.05E-03	3.1	BATTERY R16-BTA3 IN TEST AND MAINTENANCE
R16-BT_-TM-R16BTB3	5.00E-04	1.65E-05	1.03	BATTERY R16-BTB3 IN TEST AND MAINTENANCE
R16-LCB-CO-FROMR16BTA3	1.20E-05	2.36E-05	2.96	CIRCUIT BREAKER FROM R16-BTA3 OPENS SPURIOUSLY
R16-LCB-CO-R16A3SWGR1	1.20E-05	2.36E-05	2.96	CIRCUIT BREAKER 1 FROM R16-A3 OPENS SPURIOUSLY
R16-LCB-CO-R16A3SWGR2	1.20E-05	2.36E-05	2.96	CIRCUIT BREAKER 2 FROM R16-A3 OPENS SPURIOUSLY
R21-BAC-LP-ADG_1_2	2.53E-07	2.56E-07	2.01	CCF of two components: R21-BAC-LP-ANCA & R21-BAC-LP-ANCB
R21-BAC-LP-ANCA	4.80E-06	3.17E-05	7.48	AC ELECTRICAL BUSWORK FAILS DURING OPERATION
R21-NSC-TM-ANCA	1.50E-03	1.53E-02	11.2	ADG BUS A IN TEST OR MAINTENANCE

Table 13.7-5

Results - Internal Flooding Shutdown Importance Measure Report

F-V and RAW Importance Measures Report **(F-V = Fussell-Vesely Importance Measure; RAW = Risk Achievement Worth Importance Measure)** **Flooding Shutdown** **Core Damage Frequency = 5.21E-09**				
Event Name	**Probability**	**Fus Ves**	**RAW**	**Description**
R-M5-G31	2.29E-01	7.47E-01	3.51	RWCU/SDC RECOVERY
R-M6-G31	2.18E-01	2.53E-01	1.91	FAILURE TO RECOVER RWCU/SDC
T23-POL-RP-SP	7.20E-06	5.08E-03	703.59	SUPPRESSION POOL LEAKS CATASTROPHICALLY
U43-TNK-RP-T1A	3.72E-05	3.40E-04	10.07	PRIMARY TANK 1A FAILS CATASTOPHICALLY
U43-XHE-FO-LPCI	1.61E-03	1.65E-02	11.2	OPERATOR FAILS TO ACTUATE U43 IN LPCI MODE
XXX-XHE-FO-LPMAKEUP	1.61E-02	2.85E-01	18.39	OP. FAILS TO RECOG. NEED FOR LOW PRESS. MAKEUP AFTER DEPRESSURIZATION
XXX-XHE-FO-RPVLDE	1.61E-02	5.03E-06	1	OP. FAILS TO RECOG. OR CHECK THE RPV DECREASING LEVEL

13.8 INSIGHTS

The ESBWR probabilistic flooding risk analysis highlights the following insights regarding the flooding mitigation capability of the ESBWR:

(1) The ESBWR, due to its basic layout and safety design features, is inherently capable of mitigating potential flooding. Safety system redundancy and physical separation providing protection from flooding by large water sources, along with alternate safe shutdown features in buildings separated from flooding of safety systems provide the ESBWR with significant flooding mitigation capability.

(2) Due to the inherent ESBWR flooding mitigation capability, only a small number of flooding specific design features are key in the mitigation of significant flood sources, for example:

- Using watertight doors in the accesses to tunnels and galleries from the Control and Reactor Buildings.
- Not locating flood sources with a significant volume of water in the electrical equipment rooms located in the Reactor Building.
- Locating an automatic CWS pump trip and valve closure on high water level in the condenser pit.

(3) The internal flooding at power credits feedwater pump trip on loss of control power. This feature enables several of the top cutsets to be removed.

(4) The model conservatively assumes that both trains of Standby Liquid Control System (SLCS) trains are required for success because of uncertainties associated with the SLCS flow model. The result of this conservatism is that flooding in the reactor building at +17500 elevation or failure of a SLCS pipe and failure of rods to insert results in core damage. Some of the top cutsets would be eliminated if one train of SLCS were sufficient to prevent core damage.

(5) Flooding in the steam tunnel as a result of a leak or break in the Nuclear Boiler System (B21) provides the most impact to the ESBWR flooding analysis. Due to the conservative nature of the flooding methodology applied, all of the components of the B21 system would fail during this flooding event without regard to the location to the system break and respective function.

13.9 CONCLUSIONS

The main conclusion that can be drawn from the ESBWR probabilistic flooding analysis is that the risk from internal flooding is acceptably low. The at-power CDF from internal flood sources is 6.95E-09/year. The LRF for at-power from internal flooding sources is 4.09E-09/year. The flood risk analysis shows that the ESBWR internal flooding risk is less than the internal events L1 and is slightly higher for the L2 analyses. The shutdown CDF from internal flooding sources is 5.21E-09/year, which is lower than the shutdown risk from the L1 internal model.

The risk analyses for flooding at-power and shutdown represent stand-alone CDF and risk-based insights. This data is not additive to CDF and insights gained from other risk analyses.

The ESBWR is inherently safe with respect to internal flood events and no operator actions are required to mitigate postulated floods. Although timely operator action can reduce damage to equipment and flood events, these actions are not yet developed and their benefit is not included. It has been shown that the plant can be safely shut down at low risk to plant personnel and the general public.

13.10 REFERENCES

13-1 NUREG/CR-6928. "Industry-Average Performance for Components and Initiating Events at U.S. Commercial Nuclear Power Plants", February 2007.

13-2 NUREG/CR-4639, "Nuclear Computerized Library for Assessing Reactor Reliability (NUCLARR)", Revision 1, May 1990.

13 -3 NSAC-60, The Nuclear Safety Analysis Center and Duke Power Company, Oconee PRA; "A Probabilistic Risk Assessment of Oconee Unit 3," June 1984.

13-4 General Electric Nuclear Energy, "ESBWR Design Control Document Tier 2, Chapter 3, Design of Structures, Components, Equipment, and Systems", 26A6642AJ

13-5 GE-Hitachi Nuclear Energy Americas, LLC, "ESBWR Plant Flood Zone Definition Drawings and Other PRA Supporting Information", NEDE-33386, Class II (GEH Proprietary), Revision 1, May 2009.

14 HIGH WIND RISK

Contents

14.1 INTRODUCTION 14.1-1
14.2 METHODOLOGY 14.2-1
14.2.1 Assumptions 14.2-1
14.3 IDENTIFICATION OF PLANT HIGH WIND STRIKE AREAS 14.3-1
14.4 CALCULATION OF THE HIGH WIND STRIKE FREQUENCY 14.4-1
14.4.1 Tornado Strike Frequency 14.4-1
14.4.2 Hurricane Strike Frequency 14.4-3
14.5 CALCULATION OF CORE DAMAGE FREQUENCY AND LARGE RELEASE FREQUENCIES 14.5-1
14.5.1 At-Power Core Damage and Release Frequencies 14.5-1
14.5.2 Shutdown Core Damage and Release Frequencies 14.5-1
14.6 RESULTS 14.6-1
14.7 INSIGHTS 14.7-1
14.8 CONCLUSIONS 14.8-1
14.9 REFERENCES 14.9-1

List of Tables

Table 14.2-1 ESBWR Hurricane Winds Classification 14.2-3
Table 14.2-2 ESBWR Tornado Wind Classification 14.2-4
Table 14.3-1 ESBWR Hurricane Wind – PRA Predicted Structure Damage 14.3-2
Table 14.3-2 ESBWR Tornado Wind – PRA Predicted Structure Damage 14.3-3
Table 14.6-1 High Wind-Induced CDF and LRF 14.6-2
Table 14.6-2 High Wind At-Power Cutset Report 14.6-3
Table 14.6-3 High Wind Shutdown Cutset Report 14.6-70
Table 14.6-4 High Wind At-Power Importance Measure Report 14.6-125
Table 14.6-5 High Wind Shutdown Importance Measure Report 14.6-175
Table 14.6-6 High Wind CET Release Category Frequencies 14.6-271

14 HIGH WIND RISK

This section documents the high wind analysis for the ESBWR PRA.

14.1 INTRODUCTION

The probabilistic high wind analysis is performed to assess the impacts of high wind forces on the safe operation of the ESBWR plant.

The ESBWR high wind analysis explicitly quantifies accident sequences and containment releases initiated by both tornado and hurricane winds. Straight winds are lesser velocity winds that pose minimal challenges to the plant design. It should be noted that straight line winds of lesser velocities are not included in the ESBWR high wind risk analysis. The probabilistic impact associated with these winds is addressed as part of the weather-related loss of preferred power initiating event in the at-power internal events PRA model.

The scope of the analysis includes both at-power and shutdown high wind-induced accident scenarios.

14.2 METHODOLOGY

The high wind risk analysis involves the following major steps:

(1) Tornado high wind event frequency

(2) Tornado-induced plant impacts

(3) Analysis of tornado-induced core damage frequencies and release frequencies

(4) Hurricane high wind event frequency

(5) Hurricane-induced plant impacts, and

(6) Analysis of hurricane-induced core damage frequencies and release frequencies.

The high wind PRA analysis is conducted by identifying and classifying potential high wind events. Data is then compiled to generate a frequency of occurrence to represent each of the potential high wind events. In addition, a qualitative evaluation of the ESBWR systems, structure and components is performed to identify specific plant impacts/failures associated with each high wind event. Finally, an ESBWR-specific high wind event frequency and plant impacts are applied to the at-power and shutdown PRA model to obtain CDF and LRF results.

The PRA high wind risk analysis is based on the design basis for the ESBWR structures, systems, and components. The ESBWR is designed for a tornado wind load of 147.5 m/s (330 mph) (DCD Tier 2, Table 2.0-1), which is assumed to be the maximum wind speed that will not challenge the safety-related structures. In addition, the ESBWR is designed for extreme wind speed of 67.1 m/s (150 mph) for seismic Category I and II structures and 58.1 m/s (130 mph) for non-seismic structures (DCD Tier 2, Table 2.0-1).

At-power and shutdown high wind-induced accident scenarios and releases are quantified and analyzed in the following sections.

14.2.1 Assumptions

The following assumptions were used in conducting the ESBWR high wind risk analysis.

(1) The classification of the hurricane winds used in the ESBWR high wind analysis is based on the Saffir-Simpson scale. Details of these hurricane wind classes are provided in Table 14.2-1.

(2) The classification of the tornado winds for the ESBWR high wind analysis is based on the recommended wind speed ranges of the Enhanced Fujita (EF) scale as shown in Table 14.2-2.

(3) The seismic category classification of systems, structures and components is consistent with those identified in DCD Tier 2, Chapter 3, Table 3.2-1.

(4) Seismic Category I and II structures are designed to withstand the extreme wind impacts identified in Tier 2, Chapter 2, Table 2.0-1. For the ESBWR high wind analysis, these extreme wind conditions are assumed to be the same as the Category 5 hurricane winds.

(5) All at-power ESBWR high wind analyses include hurricane high winds assuming the plant is operating. This approach is conservative for the hurricane high wind analysis where

sufficient advanced warning and procedures would enable the to plant to be placed into a safe condition (shutdown operations) prior to the high wind event.

(6) For the ESBWR high wind analysis, the frequency of occurrence data for tornados high wind events is compiled from sources based on the Enhanced Fujita (EF) scale for classification of tornados. This data is correlated to the ESBWR EF scale of tornado classification as shown in Table 14.2-2.

(7) Shutdown hours were assumed to be consistent with duration of shutdown modes as described in Section 16.2. These durations were 96 hours/year for Mode 5, 24 hours/year for Mode 5 Open and 29.5 hours/year for Mode 6 Unflooded. The annual operational duration for the ESBWR is 8760 hours.

Table 14.2-1

ESBWR Hurricane Winds Classification

Hurricane Category	Wind Speed (mph)[1]
Category 1	74 - 95
Category 2	96 - 110
Category 3	111 - 130
Category 4	131 - 155
Category 5	> 155

Note: [1] Wind speeds are based on the Saffir-Simpson Hurricane scale, see reference 14-6.

Table 14.2-2

ESBWR Tornado Wind Classification

Fujita Scale			Enhanced Fujita Scale[2]	
Tornado Category	Number of Tornados	Wind Speed (mph)[1]	Tornado Category	Wind Speed (mph)[1]
F0	20,043	45 - 78	EF0	65 - 85
F1	15,850	79 - 117	EF1	86 - 109
F2	7,855	118 - 161	EF2	110 - 137
F3	2,061	162 - 209	EF3	138 - 167
F4	489	210 - 261	EF4	168 - 199
F5	50	262 - 317	EF5	200 - 234

Notes: [1] Wind speeds represent 3-second gust speeds.
[2] Wind speeds are based on the recommended Enhanced Fujita Hurricane scale, see reference 14-7.

14.3 IDENTIFICATION OF PLANT HIGH WIND STRIKE AREAS

Table 3.2-1 of the DCD contains a summary of seismic classifications of ESBWR principal components and structures. In particular, the seismic classification of structures is relevant to their ability to withstand high winds and associated missiles. Based on the seismic design and classification, component and strucutre failures are assigned for each of the specific high wind events within the ESBWR high wind analysis.

In addition to system/component-specific failures, other impacts were assumed to accompany high wind events. For the ESBWR high wind risk analysis, Category 3, 4 & 5 hurricane events (H345) and tornado events EF2 and greater in magnitude (T2/3, T4 and T5) are assumed to result in the following additional site impacts:

- Switchyard component failures due to loss of preferred power (LOPP)
- No offsite power recovery

A summary of the high wind failures/impacts associated with the seismic category of ESBWR components and systems are provided in Table 14.3-1 for the range of hurricane winds and Table 14.3-2 for the range of tornado winds.

Table 14.3-1

ESBWR Hurricane Wind – PRA Predicted Structure Damage

Hurricane Category /ESBWR High Wind Event ID	ESBWR Plant Structures[1]			
	SC I	SC II	RTNSS	NS
Category 1 / H1	No damage	No damage	No damage	No damage
Category 2 / H2	No damage	No damage	No damage	No damage
Category 3 / H3	No damage/ LOPP	No damage/ LOPP	No damage/ LOPP	Failure
Category 4 / H4	No damage/ LOPP	No damage/ LOPP	No damage/ LOPP	Failure
Category 5 /H5	No damage/ LOPP	No damage/ LOPP	No damage/ LOPP	Failure

Notes:[1] The ESBWR plant structures are identified as seismic Category I (SC I), seismic Category II (SC II), regulatory treatment of non-safety systems (RTNSS), and non seismic (NS).

Table 14.3-2

ESBWR Tornado Wind – PRA Predicted Structure Damage

Tornado Category/ESBWR High Wind Event ID	ESBWR Plant Structures[1]			
	SC I	SC II	RTNSS	NS
EF 0 / T0	No damage	No damage	No damage	No damage
EF 1 / T1	No damage	No damage	No damage	No damage
EF 2 / T2	No damage	No damage	No damage	Failure
EF 3 / T3	No damage	No damage	No damage	Failure
EF 4 / T4	No damage	No damage	Failure	Failure
EF 5 / T5	No damage	Possible failures associated with tornado missiles	Failure	Failure

Notes: [1] The ESBWR plant structures are identified as seismic Category I (SC I), seismic Category II (SC II), regulatory treatment of non-safety systems (RTNSS), and non seismic (NS).

14.4 CALCULATION OF THE HIGH WIND STRIKE FREQUENCY

14.4.1 Tornado Strike Frequency

This section documents the calculation of the annual exceedance frequency for the tornado hazard. The tornado hazard is a function of tornado strike frequency and intensity. A commonly used definition of tornado intensity is the Fujita (F) tornado wind speed intensity relationship developed by Dr. Theodore Fujita of the University of Chicago. The Fujita F-scale is a classification based on increasing intensity from F-0 to F-6, with each level corresponding to a range of wind speeds. Although the Fujita Scale has been in use for 33 years, the limitations of the scale, such as a lack of damage indicators and lack of a clear correlation between wind speed and damage, have led to the development of the Enhanced Fujita Scale (EF) by the Wind Science and Engineering Center at Texas Tech University in Lubbock, Texas.

The intensity levels and associated tornado wind speeds for both the F and EF scale are summarized in Table 14.2-2 with the assumed impact to structures and components shown in Table 14.3-2. For the ESBWR high wind risk analysis, the EF scale was used for the tornado analysis.

For the ESBWR, the tornado strike initiating event frequency is calculated using the methodology provided in NUREG/CR-4461 (Ref. 14-8). To ensure a bounding analysis, tornado strike initiating frequencies that are encompassing of most sites are generated using data from the central region of the US where the tornado intensities and frequencies of occurrence are highest. In addition, an ESBWR characteristic length w_s of 400 ft is assumed, which represents a value double the assumed characteristic length used in NUREG/CR-4461. This results in the doubling of the striking probabilities for finite structures. The resulting tornado strike frequencies for the ESBWR tornado wind events are provided below.

ESBWR Tornado Event	Tornado Strike Frequency (events/yr)
T2/3	9.68E-05
T4	4.42E-06
T5	5.02E-07

<u>T0/T1</u> At-Power – Based on the ESBWR tornado and extreme wind design basis, it is assumed that all structures, seismic Category I (SC I), seismic Category II (SC II), regulatory treatment of non-safety systems (RTNSS), and the non-seismic (NS) structures, can withstand the winds associated with an T0/T1 tornado. The only impact to the site is expected to be a loss of preferred power (LOPP) with no additional equipment failures caused by the tornado. These LOPP events are covered by the internal events PRA and have been included under the initiating events for LOPP, Weather Related (See Section 2 of this document). No additional evaluation of T0/T1 tornado events is conducted as part of the high wind risk analysis.

T2/T3 At-Power - T2/T3 tornados exceed the wind speed design of NS structures based on the ESBWR design basis. However, RTNSS, SC I and SC II structures are designed to withstand the T2/T3 associated winds. Therefore, for T2/T3 tornados the equipment located in NS structures or in the yard is assumed to fail. The ESBWR tornado strike frequency for a both T2 and T3 high wind events, T2/3 is 9.68E-05 per year.

T4 At-Power – The T4/tornado wind speeds would exceed the design of RTNSS and NS structures, but not SC I or SC II structures. Therefore, for T4 tornados, the equipment located in RTNSS structures and the yard will be assumed to fail. The ESBWR tornado strike frequency for a T4 high wind event is 4.42E-06 per year.

T5 At-Power – The T5 tornado wind speeds would exceed the design of RTNSS and NS structures, but not SCI or SC II structures. Therefore, T5 tornados, the equipment located in RTNSS structures and the yard will be assumed to fail. The ESBWR tornado strike frequency for a T5 high wind event is 5.02E-07 per year.

In addition to the at-power tornado strike frequencies, tornado frequencies were developed for Mode 5, Mode 5 Open and Mode 6 Unflooded shutdown operations. When the reactor well is flooded (Mode 6-Flooded), the risk associated with LOPP due to a tornado strike is negligible due to a large quantity of water passively available to provide cooling for a time period in excess of 24 hours. This time period allows for an adequate path from an external water source to the reactor well to be established. Equipment and systems, such as control rod drive (CRD) pumps, Fuel and Auxiliary Pool Cooling System (FAPCS) pumps, Reactor Water Cleanup (RWCU)/Shutdown Cooling (SDC) pumps, or firewater pumps, are housed in SC I structures and would be available to provide an adequate cooling pathway when powered from on-site power. For this reason, shutdown analysis for Mode 6 Flooded operations was not considered in the high wind analysis.

T0/T1 Shutdown – For the same reasons provided for at-power operations, no additional evaluation of EF0/EF1 tornado events is conducted as part of the shutdown high wind risk analysis.

T2/T3 Shutdown – Like at-power T2/T3 tornado events, equipment located in NS structures or in the yard is assumed to fail and RTNSS, SC I and SC II structures are not adversely affected. Using the proportion of estimated operating hours for the different shutdown modes, the shutdown T2/3 tornado strike frequencies for the combined tornado event were calculated to be 1.07E-06 per year, 2.61E-07 per year**,** and 3.29E-07 per year for Mode 5, Mode 5 Open and Mode 6 Unflooded, respectively.

T4 Shutdown – The T4 shutdown tornado events are assumed to fail RTNSS and NS structures and/or components located in the yard, but not SC I or SC II structures. Using the proportion of estimated operating hours for the different shutdown modes, the shutdown T4 tornado strike frequencies were calculated to be 4.86E-08 per year, 1.19E-08 per year**,** and 1.50E-08 peryear for Mode 5, Mode 5 Open and Mode 6 Unflooded, respectively.

T5 Shutdown – The T5 shutdown tornado events are assumed to fail RTNSS and NS structures and/or components located in the yard, but not SC I or SC II structures. Using the proportion of estimated operating hours for the different shutdown modes, the shutdown T5 tornado strike frequencies were calculated to be 5.52E-09 per year, 1.36E-09 per year**,** and 1.71E-09 per year for Mode 5, Mode 5 Open and Mode 6 Unflooded, respectively.

14.4.2 Hurricane Strike Frequency

This section documents the calculation of the annual exceedance frequency for the hurricane hazard. The hurricane hazard is a function of hurricane strike frequency and intensity. The intensity levels and associated hurricane wind speeds are summarized in Table 14.2-1 with the assumed impact to structures and components shown in Table 14.3-1. For the high wind hurricane risk analysis, the Saffir-Simpson scale was used to correlate wind speeds for the hurricane analysis with the ESBWR extreme winds design basis.

To determine the hurricane strike frequency, the LOPP data associated with hurricane events was obtained from NUREG/CR-6890 (Reference 14-4). Five hurricane-related LOPP events occurred at nuclear power plants during the time covered by the study. For the purpose of the ESBWR high wind risk analysis, only coastal plants are considered to be vulnerable to hurricanes. As a result, the total operating duration of all coastal plants within the study was obtained. The total operating durations are 292.65 reactor critical years (rcry) and 35.37 reactor shutdown years (rsy) for a total of 328.02 reactor calendar years (rcy) for the coastal plants.

The initiating event frequency for hurricane related LOPP events 1.52E-02 events/rcy, calculated as the number of LOPP events caused by hurricanes divided by the total rcy. To provide a more bounding ESBWR hurricane strike frequency, a subset of the coastal plant data was collected for plant located on shorelines and in areas with high return rates for hurricanes. This data was limited to plants located in Florida, Louisiana, and North Carolina. To calculate a bounding hurricane strike frequency, a total operating duration for shoreline plants is 58.51 rcry and 5.49 rsy for a total of 64 rcy. The resulting hurricane initiating event frequency is roughly 5 times the frequency for all coastal plants. For the ESBWR high wind risk analysis, a hurricane strike frequency of 7.60E-02 events/rcy was used and represents a factor of 5 increase over the hurricane initiating frequency for coastal data.

<u>Category</u> <u>H12</u> - Based on the ESBWR tornado and extreme wind design basis, it is assumed that all structures (SC I, SC II, RTNSS, and NS) can withstand the winds associated with H12 hurricanes. The only impact to the site is expected to be a loss of preferred power (LOPP) with no additional equipment failures caused by the hurricane. These LOPP events are covered by the internal events PRA and have been included under the initiating events for LOPP, Weather Related (NEDO-33201, Section 2). No additional evaluation of H12 hurricane events is conducted as part of the high wind risk analysis.

<u>Category</u> <u>H345</u> – For H345 hurricane events, wind speeds exceed the wind speed design of NS structures based on the ESBWR design basis. However, RTNSS, SC I and SC II structures are designed to withstand the extreme winds associated with H345 hurricane events. Therefore, for H345 hurricanes, the equipment located in NS structures or in the yard is assumed to fail. The ESBWR hurricane strike frequency for a H345 high wind event is 7.60E-02.

In addition to the at-power hurricane strike frequencies, hurricane frequencies were developed for Mode 5, Mode 5 Open and Mode 6 Unflooded shutdown operations. The Shutdown Hurricane Mode 6 Uunflooded high wind strike frequency is added to the Shutdown Hurricane Mode 5 Open high wind strike frequency so that both modes are evaluated assuming Mode 5 Open conditions. Combining these two modes is acceptable if it is assumed that coastal plants have several days of warning to prepare for a hurricane strike and should be able to transition to a plant configuration such as Mode 5 Open prior to the hurricane strike. Shutdown analysis for

Mode 6 Flooded operations were not considered in the high wind analysis as discussed earlier in the tornado strike frequency section.

H12 Shutdown – For the same reasons provided for at-power operations, no additional evaluation of H12 events is conducted as part of the shutdown high wind risk analysis.

H345 Shutdown – Like H345 at-power hurricane events, equipment located in NS structures or in the yard is assumed to fail and RTNSS, SC I and SC II structures are not impacted. Using the proportion of estimated operating hours for the different shutdown modes, the shutdown H345 hurricane strike frequencies are calculated to be 8.36E-04 per year and 4.64E-04 per year for Mode 5 and Mode 5 Open plus Mode 6 Unflooded, respectively.

14.5 CALCULATION OF CORE DAMAGE FREQUENCY AND LARGE RELEASE FREQUENCIES

The internal events Level 2 (L2) and shutdown PRA accident sequence structures, system fault trees and success criteria are used in the calculation of the high wind core damage frequency (CDF) and large release frequency (LRF). Level 1 high wind event results were obtained from the Level 2 results. The CDF and LRF quantifications are performed at a quantification truncation limit of 1E-15/year.

Both at-power and shutdown high wind-induced accident sequences and releases are quantified.

14.5.1 At-Power Core Damage and Release Frequencies

To assess the ESBWR at-power high wind-induced core damage risk, the LOPP event tree (NEDO-33201, Section 3) is quantified using the frequency of high wind strikes generated in Section 14.4 as the initiating event frequencies. These additional initiating events and their frequencies used for the ESBWR at power high winds risk analysis included:

- %T-LOPP-WRH345 - LOPP Hurricane Category 3/4/5 7.60E-02 per year
- %T-LOPP-WRT23 - LOPP Tornado T23 9.68E-05 per year
- %T-LOPP-WRT4 - LOPP Tornado T4 4.46E-06 per year
- %T-LOPP-WRT5 – LOPP Tornado T5 5.02E-07 per year

Along with the high wind frequencies, the effect on ESBWR structures, components and systems, as provided in Tables 14.3-1 and 14.3-2, was evaluated per high wind event. Additional flag files were generated to account for the failure of the components not designed for the appropriate wind events during at power events.

14.5.2 Shutdown Core Damage and Release Frequencies

The shutdown mode high wind initiating event frequencies are used in the internal events shutdown LOPP event tree, with the same modeling discussed previously. Additional initiating events and their frequency used for the ESBWR shutdown high winds risk analysis included:

- %M5_LOPP-H345 Hurricane H345 8.36E-04 per year
- %M5_LOPP-T23 Tornado T23 1.07E-06 per year
- %M5_LOPP-T4 Tornado T4 4.86E-08 per year
- %M5_LOPP-T5 Tornado T5 5.52E-09 per year
- %M5O_LOPP-H345 Hurricane H345 4.64E-04 per year
- %M5O_LOPP-T23 Tornado T2/3 2.61E-07 per year
- %M5O_LOPP-T4 Tornado T4 1.19E-08 per year
- %M5O_LOPP-T5 Tornado T5 1.36E-09 per year
- %M6U_LOPP-T23 Tornado T2/3 3.29E-07 per year

- %M6U_LOPP–T4 Tornado T4 1.50E-08 per year
- %M6U_LOPP-T5 Tornado T5 1.71E-09 per year

Along with the high wind frequencies, the impact to ESBWR structures, components and systems, as provided in Tables 14.3-1 and 14.3-2, was evaluated per high wind event. Additional flag files were generated to account for the failure of the components not designed for each of the appropriate wind events during shutdown operations

14.6 RESULTS

The core damage frequency results of the ESBWR high wind risk analysis are summarized in Table 14.6-1. The total high wind CDF for both at-power and shutdown conditions is 4.80E-08/year with a CDF of 8.51E-09/year for at-power operations and a CDF of 3.95E-08/year for shutdown operations. A summary of these results is contained in Table 14.6-1. The high wind at-power CDF is not significant in comparison to the internal events CDF and the core damage frequency goal. However, the CDF for shutdown operations during high wind events is increased from the shutdown results.

The Level 2 PRA release categories are described in Subsection 8.2.1.4. TSL is the Level 2 success state and indicates an intact, controlled containment boundary. The total high wind analysis produces a non-TSL release frequency for both at power and shutdown operations of 4.07E-08/year with an at-power non-TSL release frequency of 1.24E-09/year and shutdown non-TSL release frequency of 3.95E-08/year. The CDF and non-TSL for shutdown operations are the same due to containment being open during all Mode 5 and Mode 6 operations. This leads to containment bypass for all shutdown sequences.

The dominant cutsets for the at-power high wind CDF are provided in Table 14.6-2, and those for shutdown high wind CDF are provided in Table 14.6-3.

The risk importance measures for the at-power high wind CDF are provided in Table 14.6-4, and those for shutdown high wind CDF are provided in Table 14.6-5.

The probability of each release category is summarized in Table 14.6-6.

Table 14.6-1

High Wind-Induced CDF and LRF

High Wind Risk Analysis	Strike	Results	
	Freq. (per year)	CDF (per year)	n-TSL (per year)
High Wind – At Power			
Tornado			
EF2/EF3 Tornado - T2/3	9.68E-05	9.02E-12	2.75E-14
EF4 Tornado – T4	4.42E-06	8.45E-10	8.45E-10
EF5 Tornado - T5	5.02E-07	9.60E-11	9.60E-11
Hurricane			
3/4/5 Hurricane – H345	7.60E-02	7.56E-09	2.98E-10
Total – At Power		**8.51E-09**	**1.24E-09**
High Wind – Shutdown			
Tornado			
EF2/EF3 Tornado – T2/3 Mode 5	1.07E-06	1.71E-11	1.71E-11
EF2/EF3 Tornado – T2/3 Mode 5 Open	2.61E-07	1.21E-11	1.21E-11
EF2/EF3 Tornado – T2/3 Mode 6 Unflooded	3.29E-07	7.57E-12	7.57E-12
EF4 Tornado – T4 Mode 5	4.86E-08	1.53E-12	1.53E-12
EF4 Tornado – T4 Mode 5 Open	1.19E-08	1.34E-12	1.34E-12
EF4 Tornado – T4 Mode 6 Unflooded	1.50E-08	1.19E-12	1.19E-12
EF5 Tornado – T5 Mode 5	5.52E-09	2.39E-12	2.39E-12
EF5 Tornado – T5 Mode 5 Open	1.36E-09	2.39E-12	2.39E-12
EF5 Tornado – T5 Mode 6 Unflooded	1.71E-09	2.30E-12	2.30E-12
Hurricane			
3/4/5 Hurricane – H345 Mode 5	8.36E-04	1.47E-08	1.47E-08
3/4/5 Hurricane – H345 Mode 5 Open	2.05E-04	2.48E-08(1)	2.48E-08(1)
3/4/5 Hurricane – H345 Mode 6 Unflooded	2.58E-04	NA(1)	NA(1)
Total - Shutdown		**3.95E-08**	**3.95E-08**
High Wind – Total		**4.80E-08**	**4.07E-08**

Notes:

(1) Shutdown Hurricane Mode 6 Unflooded high wind strike frequency is combined with Shutdown Hurricane Mode 5 Open.

Table 14.6-2

High Wind At-Power Cutset Report

CDF =8.5E-09/yr
Top 200 Cutsets

#	Cutset Prob	Event Prob	Event	Description
1	7.60E-10	7.60E-02	%T-LOPP-WRH345	WEATHER RELATED LOSS OF PREFERRED POWER DUE TO HURRICANE H3/4/5
		1.00E-04	C63-CCFSOFTWARE	Common cause failure of software
		1.00E-04	C72-CCFSOFTWARE	COMMON CAUSE FAILURE OF DPS PROCESSORS
		1.00E+00	FL_T-LOPP061	Sequence tag for T-LOPP061
2	4.42E-10	4.42E-06	%T-LOPP-WRT4	WEATHER RELATED LOSS OF PREFERRED POWER DUE TO CATEGORY F4
		1.00E-04	C63-CCFSOFTWARE	Common cause failure of software
		1.00E+00	FL_T-LOPP061	Sequence tag for T-LOPP061
3	3.67E-10	7.60E-02	%T-LOPP-WRH345	WEATHER RELATED LOSS OF PREFERRED POWER DUE TO HURRICANE H3/4/5
		3.00E-03	B32-SQV-CC-F104A	F104A FAILS TO OPEN
		1.00E-03	B32-UV_-OO-F105A	CHECK VALVE FAILS TO CLOSE
		1.00E+00	FL_T-LOPP003A	Sequence tag for T-LOPP003A
		1.00E+00	XHOS72H	HOUSE EVENT: 72 HOURS (VALUE =1)
		1.61E-03	XXX-XHE-FO-ICPCCS	Operator fails to recognize the need to makeup ICS/PCCS Pool level.

Table 14.6-2

High Wind At-Power Cutset Report

CDF =8.5E-09/yr
Top 200 Cutsets

4	3.67E-10	7.60E-02	%T-LOPP-WRH345	WEATHER RELATED LOSS OF PREFERRED POWER DUE TO HURRICANE H3/4/5
		3.00E-03	B32-SQV-CC-F104B	F104B FAILS TO OPEN
		1.00E-03	B32-UV_-OO-F105B	CHECK VALVE FAILS TO CLOSE
		1.00E+00	FL_T-LOPP003A	Sequence tag for T-LOPP003A
		1.00E+00	XHOS72H	HOUSE EVENT: 72 HOURS (VALUE =1)
		1.61E-03	XXX-XHE-FO-ICPCCS	Operator fails to recognize the need to makeup ICS/PCCS Pool level.
5	2.28E-10	7.60E-02	%T-LOPP-WRH345	WEATHER RELATED LOSS OF PREFERRED POWER DUE TO HURRICANE H3/4/5
		3.00E-05	C63-DTM-FC-ESFLG_ALL	CCF of all components in group 'C63-DTM-FC-ESFLG'
		1.00E-04	C72-CCFSOFTWARE	COMMON CAUSE FAILURE OF DPS PROCESSORS
		1.00E+00	FL_T-LOPP061	Sequence tag for T-LOPP061
6	1.84E-10	7.60E-02	%T-LOPP-WRH345	WEATHER RELATED LOSS OF PREFERRED POWER DUE TO HURRICANE H3/4/5
		1.50E-04	B21-SQV-CC_ALL	CCF of all components in group 'B21-SQV-CC'
		1.00E+00	B32-NONCONDENSE	Non condensable gasses form in ICS sufficiently to require venting
		1.00E-04	C63-CCFSOFTWARE	Common cause failure of software
		1.00E+00	FL_T-LOPP061	Sequence tag for T-LOPP061
		1.61E-01	XXX-XHE-FO-DEPRESS	OPERATOR FAILS TO RECOGNIZE NEED OF DEPRESSURIZATION

Table 14.6-2

High Wind At-Power Cutset Report

CDF =8.5E-09/yr
Top 200 Cutsets

7	1.84E-10	7.60E-02	%T-LOPP-WRH345	WEATHER RELATED LOSS OF PREFERRED POWER DUE TO HURRICANE H3/4/5
		1.50E-04	B21-SQV-CC_ALL	CCF of all components in group 'B21-SQV-CC'
		1.00E-04	C63-CCFSOFTWARE_S	ESF SPURIOUS COMMON CAUSE SOFTWARE FAILURE
		1.00E+00	FL_T-LOPP061	Sequence tag for T-LOPP061
		1.61E-01	XXX-XHE-FO-DEPRESS	OPERATOR FAILS TO RECOGNIZE NEED OF DEPRESSURIZATION
8	1.84E-10	7.60E-02	%T-LOPP-WRH345	WEATHER RELATED LOSS OF PREFERRED POWER DUE TO HURRICANE H3/4/5
		1.00E+00	B32-NONCONDENSE	Non condensable gasses form in ICS sufficiently to require venting
		1.00E-04	C63-CCFSOFTWARE	Common cause failure of software
		1.50E-04	E50-SQV-CC-INJ_ALL	CCF of all components in group 'E50-SQV-CC-INJ'
		1.00E+00	FL_T-LOPP050	Sequence tag for T-LOPP050
		1.61E-01	XXX-XHE-FO-LPMAKEUP	OP. FAILS TO RECOG. NEED FOR LOW PRESS. MAKEUP AFTER DEPRESSURIZATION
9	1.84E-10	7.60E-02	%T-LOPP-WRH345	WEATHER RELATED LOSS OF PREFERRED POWER DUE TO HURRICANE H3/4/5
		1.00E-04	C63-CCFSOFTWARE_S	ESF SPURIOUS COMMON CAUSE SOFTWARE FAILURE
		1.50E-04	E50-SQV-CC-INJ_ALL	CCF of all components in group 'E50-SQV-CC-INJ'
		1.00E+00	FL_T-LOPP050	Sequence tag for T-LOPP050
		1.61E-01	XXX-XHE-FO-LPMAKEUP	OP. FAILS TO RECOG. NEED FOR LOW PRESS. MAKEUP AFTER DEPRESSURIZATION

Table 14.6-2

High Wind At-Power Cutset Report

CDF =8.5E-09/yr
Top 200 Cutsets

10	1.37E-10	7.60E-02	%T-LOPP-WRH345	WEATHER RELATED LOSS OF PREFERRED POWER DUE TO HURRICANE H3/4/5
		1.80E-05	C63-LOG-FC-ESFLG_ALL	CCF of all components in group 'C63-LOG-FC-ESFLG'
		1.00E-04	C72-CCFSOFTWARE	COMMON CAUSE FAILURE OF DPS PROCESSORS
		1.00E+00	FL_T-LOPP061	Sequence tag for T-LOPP061
11	1.33E-10	4.42E-06	%T-LOPP-WRT4	WEATHER RELATED LOSS OF PREFERRED POWER DUE TO CATEGORY F4
		3.00E-05	C63-DTM-FC-ESFLG_ALL	CCF of all components in group 'C63-DTM-FC-ESFLG'
		1.00E+00	FL_T-LOPP061	Sequence tag for T-LOPP061
12	1.14E-10	7.60E-02	%T-LOPP-WRH345	WEATHER RELATED LOSS OF PREFERRED POWER DUE TO HURRICANE H3/4/5
		6.00E-03	B21-SRV-OO-ANYSRV1	SAFETY/RELIEF VALVE FAILS TO RE-CLOSE
		2.50E-07	C12-ROD-CF-SCRAM	CCF OF CONTROL RODS TO INSERT
		1.00E+00	FL_AT-T-LOPP013	Sequence tag for AT-T-LOPP013
13	1.14E-10	7.60E-02	%T-LOPP-WRH345	WEATHER RELATED LOSS OF PREFERRED POWER DUE TO HURRICANE H3/4/5
		6.00E-03	B21-SRV-OO-ANYSRV10	SAFETY/RELIEF VALVE FAILS TO RE-CLOSE
		2.50E-07	C12-ROD-CF-SCRAM	CCF OF CONTROL RODS TO INSERT
		1.00E+00	FL_AT-T-LOPP013	Sequence tag for AT-T-LOPP013
14	1.14E-10	7.60E-02	%T-LOPP-WRH345	WEATHER RELATED LOSS OF PREFERRED POWER DUE TO HURRICANE H3/4/5
		6.00E-03	B21-SRV-OO-ANYSRV11	SAFETY/RELIEF VALVE FAILS TO RE-CLOSE
		2.50E-07	C12-ROD-CF-SCRAM	CCF OF CONTROL RODS TO INSERT
		1.00E+00	FL_AT-T-LOPP013	Sequence tag for AT-T-LOPP013

Table 14.6-2

High Wind At-Power Cutset Report

CDF =8.5E-09/yr
Top 200 Cutsets

15	1.14E-10	7.60E-02	%T-LOPP-WRH345	WEATHER RELATED LOSS OF PREFERRED POWER DUE TO HURRICANE H3/4/5
		6.00E-03	B21-SRV-OO-ANYSRV12	SAFETY/RELIEF VALVE FAILS TO RE-CLOSE
		2.50E-07	C12-ROD-CF-SCRAM	CCF OF CONTROL RODS TO INSERT
		1.00E+00	FL_AT-T-LOPP013	Sequence tag for AT-T-LOPP013
16	1.14E-10	7.60E-02	%T-LOPP-WRH345	WEATHER RELATED LOSS OF PREFERRED POWER DUE TO HURRICANE H3/4/5
		6.00E-03	B21-SRV-OO-ANYSRV13	SAFETY/RELIEF VALVE FAILS TO RE-CLOSE
		2.50E-07	C12-ROD-CF-SCRAM	CCF OF CONTROL RODS TO INSERT
		1.00E+00	FL_AT-T-LOPP013	Sequence tag for AT-T-LOPP013
17	1.14E-10	7.60E-02	%T-LOPP-WRH345	WEATHER RELATED LOSS OF PREFERRED POWER DUE TO HURRICANE H3/4/5
		6.00E-03	B21-SRV-OO-ANYSRV14	SAFETY/RELIEF VALVE FAILS TO RE-CLOSE
		2.50E-07	C12-ROD-CF-SCRAM	CCF OF CONTROL RODS TO INSERT
		1.00E+00	FL_AT-T-LOPP013	Sequence tag for AT-T-LOPP013
18	1.14E-10	7.60E-02	%T-LOPP-WRH345	WEATHER RELATED LOSS OF PREFERRED POWER DUE TO HURRICANE H3/4/5
		6.00E-03	B21-SRV-OO-ANYSRV15	SAFETY/RELIEF VALVE FAILS TO RE-CLOSE
		2.50E-07	C12-ROD-CF-SCRAM	CCF OF CONTROL RODS TO INSERT
		1.00E+00	FL_AT-T-LOPP013	Sequence tag for AT-T-LOPP013

Table 14.6-2

High Wind At-Power Cutset Report

CDF =8.5E-09/yr
Top 200 Cutsets

19	1.14E-10	7.60E-02	%T-LOPP-WRH345	WEATHER RELATED LOSS OF PREFERRED POWER DUE TO HURRICANE H3/4/5
		6.00E-03	B21-SRV-OO-ANYSRV16	SAFETY/RELIEF VALVE FAILS TO RE-CLOSE
		2.50E-07	C12-ROD-CF-SCRAM	CCF OF CONTROL RODS TO INSERT
		1.00E+00	FL_AT-T-LOPP013	Sequence tag for AT-T-LOPP013
20	1.14E-10	7.60E-02	%T-LOPP-WRH345	WEATHER RELATED LOSS OF PREFERRED POWER DUE TO HURRICANE H3/4/5
		6.00E-03	B21-SRV-OO-ANYSRV17	SAFETY/RELIEF VALVE FAILS TO RE-CLOSE
		2.50E-07	C12-ROD-CF-SCRAM	CCF OF CONTROL RODS TO INSERT
		1.00E+00	FL_AT-T-LOPP013	Sequence tag for AT-T-LOPP013
		1.00E+00	XHOS72H	HOUSE EVENT: 72 HOURS (VALUE =1)
		1.61E-03	XXX-XHE-FO-ICPCCS	Operator fails to recognize the need to makeup ICS/PCCS Pool level.
21	1.14E-10	7.60E-02	%T-LOPP-WRH345	WEATHER RELATED LOSS OF PREFERRED POWER DUE TO HURRICANE H3/4/5
		6.00E-03	B21-SRV-OO-ANYSRV18	SAFETY/RELIEF VALVE FAILS TO RE-CLOSE
		2.50E-07	C12-ROD-CF-SCRAM	CCF OF CONTROL RODS TO INSERT
		1.00E+00	FL_AT-T-LOPP013	Sequence tag for AT-T-LOPP013
22	1.14E-10	7.60E-02	%T-LOPP-WRH345	WEATHER RELATED LOSS OF PREFERRED POWER DUE TO HURRICANE H3/4/5
		6.00E-03	B21-SRV-OO-ANYSRV2	SAFETY/RELIEF VALVE FAILS TO RE-CLOSE
		2.50E-07	C12-ROD-CF-SCRAM	CCF OF CONTROL RODS TO INSERT
		1.00E+00	FL_AT-T-LOPP013	Sequence tag for AT-T-LOPP013

Table 14.6-2

High Wind At-Power Cutset Report

CDF =8.5E-09/yr
Top 200 Cutsets

23	1.14E-10	7.60E-02	%T-LOPP-WRH345	WEATHER RELATED LOSS OF PREFERRED POWER DUE TO HURRICANE H3/4/5
		6.00E-03	B21-SRV-OO-ANYSRV3	SAFETY/RELIEF VALVE FAILS TO RE-CLOSE
		2.50E-07	C12-ROD-CF-SCRAM	CCF OF CONTROL RODS TO INSERT
		1.00E+00	FL_AT-T-LOPP013	Sequence tag for AT-T-LOPP013
24	1.14E-10	7.60E-02	%T-LOPP-WRH345	WEATHER RELATED LOSS OF PREFERRED POWER DUE TO HURRICANE H3/4/5
		6.00E-03	B21-SRV-OO-ANYSRV4	SAFETY/RELIEF VALVE FAILS TO RE-CLOSE
		2.50E-07	C12-ROD-CF-SCRAM	CCF OF CONTROL RODS TO INSERT
		1.00E+00	FL_AT-T-LOPP013	Sequence tag for AT-T-LOPP013
25	1.14E-10	7.60E-02	%T-LOPP-WRH345	WEATHER RELATED LOSS OF PREFERRED POWER DUE TO HURRICANE H3/4/5
		6.00E-03	B21-SRV-OO-ANYSRV5	SAFETY/RELIEF VALVE FAILS TO RE-CLOSE
		2.50E-07	C12-ROD-CF-SCRAM	CCF OF CONTROL RODS TO INSERT
		1.00E+00	FL_AT-T-LOPP013	Sequence tag for AT-T-LOPP013
26	1.14E-10	7.60E-02	%T-LOPP-WRH345	WEATHER RELATED LOSS OF PREFERRED POWER DUE TO HURRICANE H3/4/5
		6.00E-03	B21-SRV-OO-ANYSRV6	SAFETY/RELIEF VALVE FAILS TO RE-CLOSE
		2.50E-07	C12-ROD-CF-SCRAM	CCF OF CONTROL RODS TO INSERT
		1.00E+00	FL_AT-T-LOPP013	Sequence tag for AT-T-LOPP013

Table 14.6-2

High Wind At-Power Cutset Report

CDF =8.5E-09/yr
Top 200 Cutsets

27	1.14E-10	7.60E-02	%T-LOPP-WRH345	WEATHER RELATED LOSS OF PREFERRED POWER DUE TO HURRICANE H3/4/5
		6.00E-03	B21-SRV-OO-ANYSRV7	SAFETY/RELIEF VALVE FAILS TO RE-CLOSE
		2.50E-07	C12-ROD-CF-SCRAM	CCF OF CONTROL RODS TO INSERT
		1.00E+00	FL_AT-T-LOPP013	Sequence tag for AT-T-LOPP013
28	1.14E-10	7.60E-02	%T-LOPP-WRH345	WEATHER RELATED LOSS OF PREFERRED POWER DUE TO HURRICANE H3/4/5
		6.00E-03	B21-SRV-OO-ANYSRV8	SAFETY/RELIEF VALVE FAILS TO RE-CLOSE
		2.50E-07	C12-ROD-CF-SCRAM	CCF OF CONTROL RODS TO INSERT
		1.00E+00	FL_AT-T-LOPP013	Sequence tag for AT-T-LOPP013
29	1.14E-10	7.60E-02	%T-LOPP-WRH345	WEATHER RELATED LOSS OF PREFERRED POWER DUE TO HURRICANE H3/4/5
		6.00E-03	B21-SRV-OO-ANYSRV9	SAFETY/RELIEF VALVE FAILS TO RE-CLOSE
		2.50E-07	C12-ROD-CF-SCRAM	CCF OF CONTROL RODS TO INSERT
		1.00E+00	FL_AT-T-LOPP013	Sequence tag for AT-T-LOPP013
30	9.76E-11	7.60E-02	%T-LOPP-WRH345	WEATHER RELATED LOSS OF PREFERRED POWER DUE TO HURRICANE H3/4/5
		3.00E-03	B32-SQV-CC-F104A	F104A FAILS TO OPEN
		1.00E-03	B32-UV_-OO-F105A	CHECK VALVE FAILS TO CLOSE
		1.00E+00	FL_T-LOPP003A	Sequence tag for T-LOPP003A
		1.61E-02	U43-XHE-FO-MAKEUP	OPERATOR FAILS TO ACTUATE U43 IN MAKE UP MODE
		2.66E-02	U43-XHE-FO-PMPTRK	OPERATOR FAIL TO SUPPLY WATER FROM PUMP TRUCKS
		1.00E+00	XHOS72H	HOUSE EVENT: 72 HOURS (VALUE =1)

Table 14.6-2

High Wind At-Power Cutset Report

CDF =8.5E-09/yr
Top 200 Cutsets

31	9.76E-11	7.60E-02	%T-LOPP-WRH345	WEATHER RELATED LOSS OF PREFERRED POWER DUE TO HURRICANE H3/4/5
		3.00E-03	B32-SQV-CC-F104B	F104B FAILS TO OPEN
		1.00E-03	B32-UV_-OO-F105B	CHECK VALVE FAILS TO CLOSE
		1.00E+00	FL_T-LOPP003A	Sequence tag for T-LOPP003A
		1.61E-02	U43-XHE-FO-MAKEUP	OPERATOR FAILS TO ACTUATE U43 IN MAKE UP MODE
		2.66E-02	U43-XHE-FO-PMPTRK	OPERATOR FAIL TO SUPPLY WATER FROM PUMP TRUCKS
		1.00E+00	XHOS72H	HOUSE EVENT: 72 HOURS (VALUE =1)
32	8.64E-11	7.60E-02	%T-LOPP-WRH345	WEATHER RELATED LOSS OF PREFERRED POWER DUE TO HURRICANE H3/4/5
		1.00E-04	C63-CCFSOFTWARE	Common cause failure of software
		1.00E+00	FL_T-LOPP061	Sequence tag for T-LOPP061
		1.14E-05	R13-INV-FC-CCFNSR_ALL	CCF of all components in group 'R13-INV-FC-CCFNSR'
33	7.96E-11	4.42E-06	%T-LOPP-WRT4	WEATHER RELATED LOSS OF PREFERRED POWER DUE TO CATEGORY F4
		1.80E-05	C63-LOG-FC-ESFLG_ALL	CCF of all components in group 'C63-LOG-FC-ESFLG'
		1.00E+00	FL_T-LOPP061	Sequence tag for T-LOPP061
34	7.60E-11	7.60E-02	%T-LOPP-WRH345	WEATHER RELATED LOSS OF PREFERRED POWER DUE TO HURRICANE H3/4/5
		1.00E-04	C63-CCFSOFTWARE	Common cause failure of software
		1.00E-05	C72-LOG-FC-D_1_2	CCF of two components: C72-LOG-FC-D1DPS & C72-LOG-FC-D2DPS
		1.00E+00	FL_T-LOPP061	Sequence tag for T-LOPP061

Table 14.6-2

High Wind At-Power Cutset Report

CDF =8.5E-09/yr
Top 200 Cutsets

35	7.60E-11	7.60E-02	%T-LOPP-WRH345	WEATHER RELATED LOSS OF PREFERRED POWER DUE TO HURRICANE H3/4/5
		1.00E-04	C63-CCFSOFTWARE	Common cause failure of software
		1.00E-05	C72-LOG-FC-D_1_3	CCF of two components: C72-LOG-FC-D1DPS & C72-LOG-FC-D3DPS
		1.00E+00	FL_T-LOPP061	Sequence tag for T-LOPP061
36	7.60E-11	7.60E-02	%T-LOPP-WRH345	WEATHER RELATED LOSS OF PREFERRED POWER DUE TO HURRICANE H3/4/5
		1.00E-04	C63-CCFSOFTWARE	Common cause failure of software
		1.00E-05	C72-LOG-FC-D_2_3	CCF of two components: C72-LOG-FC-D2DPS & C72-LOG-FC-D3DPS
		1.00E+00	FL_T-LOPP061	Sequence tag for T-LOPP061
37	5.02E-11	5.02E-07	%T-LOPP-WRT5	WEATHER RELATED LOSS OF PREFERRED POWER DUE TO CATEGORY F5
		1.00E-04	C63-CCFSOFTWARE	Common cause failure of software
		1.00E+00	FL_T-LOPP061	Sequence tag for T-LOPP061
38	4.42E-11	4.42E-06	%T-LOPP-WRT4	WEATHER RELATED LOSS OF PREFERRED POWER DUE TO CATEGORY F4
		1.00E-04	C71-CCFSOFTWARE	RPS COMMON CAUSE SOFTWARE FAILURE
		1.00E-01	C71-XHE-FO-SCRAM	OPERATOR FAILS TO PERFORM MANUAL SCRAM
		1.00E+00	FL_AT-T-LOPP016	Sequence tag for AT-T-LOPP016

Table 14.6-2

High Wind At-Power Cutset Report

CDF =8.5E-09/yr
Top 200 Cutsets

39	4.08E-11	7.60E-02	%T-LOPP-WRH345	WEATHER RELATED LOSS OF PREFERRED POWER DUE TO HURRICANE H3/4/5
		3.33E-04	B32-SQV-CC-XCONN_1_2	CCF of two components: B32-SQV-CC-F104A & B32-SQV-CC-F104B
		1.00E-03	B32-UV_-OO-F105A	CHECK VALVE FAILS TO CLOSE
		1.00E+00	FL_T-LOPP003A	Sequence tag for T-LOPP003A
		1.00E+00	XHOS72H	HOUSE EVENT: 72 HOURS (VALUE =1)
		1.61E-03	XXX-XHE-FO-ICPCCS	Operator fails to recognize the need to makeup ICS/PCCS Pool level.
40	4.08E-11	7.60E-02	%T-LOPP-WRH345	WEATHER RELATED LOSS OF PREFERRED POWER DUE TO HURRICANE H3/4/5
		3.33E-04	B32-SQV-CC-XCONN_1_2	CCF of two components: B32-SQV-CC-F104A & B32-SQV-CC-F104B
		1.00E-03	B32-UV_-OO-F105B	CHECK VALVE FAILS TO CLOSE
		1.00E+00	FL_T-LOPP003A	Sequence tag for T-LOPP003A
		1.00E+00	XHOS72H	HOUSE EVENT: 72 HOURS (VALUE =1)
		1.61E-03	XXX-XHE-FO-ICPCCS	Operator fails to recognize the need to makeup ICS/PCCS Pool level.
41	3.67E-11	7.60E-02	%T-LOPP-WRH345	WEATHER RELATED LOSS OF PREFERRED POWER DUE TO HURRICANE H3/4/5
		1.00E-04	B32-NPO-CC-F105A	F105A Fails to Open
		3.00E-03	B32-SQV-CC-F104A	F104A FAILS TO OPEN
		1.00E+00	FL_T-LOPP003A	Sequence tag for T-LOPP003A
		1.00E+00	XHOS72H	HOUSE EVENT: 72 HOURS (VALUE =1)
		1.61E-03	XXX-XHE-FO-ICPCCS	Operator fails to recognize the need to makeup ICS/PCCS Pool level.

Table 14.6-2

High Wind At-Power Cutset Report

CDF =8.5E-09/yr
Top 200 Cutsets

42	3.67E-11	7.60E-02	%T-LOPP-WRH345	WEATHER RELATED LOSS OF PREFERRED POWER DUE TO HURRICANE H3/4/5
		1.00E-04	B32-NPO-CC-F105B	F105B fails to open
		3.00E-03	B32-SQV-CC-F104B	F104B FAILS TO OPEN
		1.00E+00	FL_T-LOPP003A	Sequence tag for T-LOPP003A
		1.00E+00	XHOS72H	HOUSE EVENT: 72 HOURS (VALUE =1)
		1.61E-03	XXX-XHE-FO-ICPCCS	Operator fails to recognize the need to makeup ICS/PCCS Pool level.
43	3.30E-11	7.60E-02	%T-LOPP-WRH345	WEATHER RELATED LOSS OF PREFERRED POWER DUE TO HURRICANE H3/4/5
		1.50E-04	B21-SQV-CC_ALL	CCF of all components in group 'B21-SQV-CC'
		1.00E+00	B32-NONCONDENSE	Non condensable gasses form in ICS sufficiently to require venting
		1.80E-05	C63-LOG-FC-ESFLG_ALL	CCF of all components in group 'C63-LOG-FC-ESFLG'
		1.00E+00	FL_T-LOPP061	Sequence tag for T-LOPP061
		1.61E-01	XXX-XHE-FO-DEPRESS	OPERATOR FAILS TO RECOGNIZE NEED OF DEPRESSURIZATION
44	3.30E-11	7.60E-02	%T-LOPP-WRH345	WEATHER RELATED LOSS OF PREFERRED POWER DUE TO HURRICANE H3/4/5
		1.00E+00	B32-NONCONDENSE	Non condensable gasses form in ICS sufficiently to require venting
		1.80E-05	C63-LOG-FC-ESFLG_ALL	CCF of all components in group 'C63-LOG-FC-ESFLG'
		1.50E-04	E50-SQV-CC-INJ_ALL	CCF of all components in group 'E50-SQV-CC-INJ'
		1.00E+00	FL_T-LOPP050	Sequence tag for T-LOPP050
		1.61E-01	XXX-XHE-FO-LPMAKEUP	OP. FAILS TO RECOG. NEED FOR LOW PRESS. MAKEUP AFTER DEPRESSURIZATION

Table 14.6-2

High Wind At-Power Cutset Report

CDF =8.5E-09/yr
Top 200 Cutsets

45	2.74E-11	7.60E-02	%T-LOPP-WRH345	WEATHER RELATED LOSS OF PREFERRED POWER DUE TO HURRICANE H3/4/5
		3.60E-06	C63-LT_-NO-ESFRX_ALL	CCF of all components in group 'C63-LT_-NO-ESFRX'
		1.00E-04	C72-CCFSOFTWARE	COMMON CAUSE FAILURE OF DPS PROCESSORS
		1.00E+00	FL_T-LOPP061	Sequence tag for T-LOPP061
46	2.59E-11	7.60E-02	%T-LOPP-WRH345	WEATHER RELATED LOSS OF PREFERRED POWER DUE TO HURRICANE H3/4/5
		3.00E-05	C63-DTM-FC-ESFLG_ALL	CCF of all components in group 'C63-DTM-FC-ESFLG'
		1.00E+00	FL_T-LOPP061	Sequence tag for T-LOPP061
		1.14E-05	R13-INV-FC-CCFNSR_ALL	CCF of all components in group 'R13-INV-FC-CCFNSR'
47	2.28E-11	7.60E-02	%T-LOPP-WRH345	WEATHER RELATED LOSS OF PREFERRED POWER DUE TO HURRICANE H3/4/5
		3.00E-05	C63-DTM-FC-ESFLG_ALL	CCF of all components in group 'C63-DTM-FC-ESFLG'
		1.00E-05	C72-LOG-FC-D_1_2	CCF of two components: C72-LOG-FC-D1DPS & C72-LOG-FC-D2DPS
		1.00E+00	FL_T-LOPP061	Sequence tag for T-LOPP061
48	2.28E-11	7.60E-02	%T-LOPP-WRH345	WEATHER RELATED LOSS OF PREFERRED POWER DUE TO HURRICANE H3/4/5
		3.00E-05	C63-DTM-FC-ESFLG_ALL	CCF of all components in group 'C63-DTM-FC-ESFLG'
		1.00E-05	C72-LOG-FC-D_1_3	CCF of two components: C72-LOG-FC-D1DPS & C72-LOG-FC-D3DPS
		1.00E+00	FL_T-LOPP061	Sequence tag for T-LOPP061

Table 14.6-2

High Wind At-Power Cutset Report

CDF =8.5E-09/yr
Top 200 Cutsets

49	2.28E-11	7.60E-02	%T-LOPP-WRH345	WEATHER RELATED LOSS OF PREFERRED POWER DUE TO HURRICANE H3/4/5
		3.00E-05	C63-DTM-FC-ESFLG_ALL	CCF of all components in group 'C63-DTM-FC-ESFLG'
		1.00E-05	C72-LOG-FC-D_2_3	CCF of two components: C72-LOG-FC-D2DPS & C72-LOG-FC-D3DPS
		1.00E+00	FL_T-LOPP061	Sequence tag for T-LOPP061
50	2.10E-11	7.60E-02	%T-LOPP-WRH345	WEATHER RELATED LOSS OF PREFERRED POWER DUE TO HURRICANE H3/4/5
		1.00E+00	B32-NONCONDENSE	Non condensable gasses form in ICS sufficiently to require venting
		1.00E-04	C63-CCFSOFTWARE	Common cause failure of software
		1.72E-05	E50-UV_-CC-INJ_ALL	CCF of all components in group 'E50-UV_-CC-INJ'
		1.00E+00	FL_T-LOPP050	Sequence tag for T-LOPP050
		1.61E-01	XXX-XHE-FO-LPMAKEUP	OP. FAILS TO RECOG. NEED FOR LOW PRESS. MAKEUP AFTER DEPRESSURIZATION
51	2.10E-11	7.60E-02	%T-LOPP-WRH345	WEATHER RELATED LOSS OF PREFERRED POWER DUE TO HURRICANE H3/4/5
		1.00E-04	C63-CCFSOFTWARE_S	ESF SPURIOUS COMMON CAUSE SOFTWARE FAILURE
		1.72E-05	E50-UV_-CC-INJ_ALL	CCF of all components in group 'E50-UV_-CC-INJ'
		1.00E+00	FL_T-LOPP050	Sequence tag for T-LOPP050
		1.61E-01	XXX-XHE-FO-LPMAKEUP	OP. FAILS TO RECOG. NEED FOR LOW PRESS. MAKEUP AFTER DEPRESSURIZATION

Table 14.6-2

High Wind At-Power Cutset Report

CDF =8.5E-09/yr
Top 200 Cutsets

52	1.99E-11	4.42E-06	%T-LOPP-WRT4	WEATHER RELATED LOSS OF PREFERRED POWER DUE TO CATEGORY F4
		4.50E-05	C71-SLU-FC-R_ALL	CCF of all components in group 'C71-SLU-FC-R'
		1.00E-01	C71-XHE-FO-SCRAM	OPERATOR FAILS TO PERFORM MANUAL SCRAM
		1.00E+00	FL_AT-T-LOPP016	Sequence tag for AT-T-LOPP016
53	1.62E-11	7.60E-02	%T-LOPP-WRH345	WEATHER RELATED LOSS OF PREFERRED POWER DUE TO HURRICANE H3/4/5
		1.50E-04	B21-SQV-CC_ALL	CCF of all components in group 'B21-SQV-CC'
		1.00E+00	B32-NONCONDENSE	Non condensable gasses form in ICS sufficiently to require venting
		5.00E-05	B32-SOV-FE-09/10_ALL	CCF of all components in group 'B32-SOV-FE-09/10'
		1.76E-01	B32-XHE-FO-VENT	Operator fails to open vent
		1.00E+00	FL_T-LOPP061	Sequence tag for T-LOPP061
		1.61E-01	XXX-XHE-FO-DEPRESS	OPERATOR FAILS TO RECOGNIZE NEED OF DEPRESSURIZATION
54	1.62E-11	7.60E-02	%T-LOPP-WRH345	WEATHER RELATED LOSS OF PREFERRED POWER DUE TO HURRICANE H3/4/5
55	1.59E-11	4.42E-06	%T-LOPP-WRT4	WEATHER RELATED LOSS OF PREFERRED POWER DUE TO CATEGORY F4
		3.60E-06	C63-LT_-NO-ESFRX_ALL	CCF of all components in group 'C63-LT_-NO-ESFRX'
		1.00E+00	FL_T-LOPP061	Sequence tag for T-LOPP061
56	1.56E-11	7.60E-02	%T-LOPP-WRH345	WEATHER RELATED LOSS OF PREFERRED POWER DUE TO HURRICANE H3/4/5
		1.80E-05	C63-LOG-FC-ESFLG_ALL	CCF of all components in group 'C63-LOG-FC-ESFLG'
		1.00E+00	FL_T-LOPP061	Sequence tag for T-LOPP061
		1.14E-05	R13-INV-FC-CCFNSR_ALL	CCF of all components in group 'R13-INV-FC-CCFNSR'

Table 14.6-2

High Wind At-Power Cutset Report

CDF =8.5E-09/yr
Top 200 Cutsets

57	1.52E-11	7.60E-02	%T-LOPP-WRH345	WEATHER RELATED LOSS OF PREFERRED POWER DUE TO HURRICANE H3/4/5
		1.00E+00	B32-NONCONDENSE	Non condensable gasses form in ICS sufficiently to require venting
		1.76E-01	B32-XHE-FO-VENT	Operator fails to open vent
		1.00E-04	C72-CCFSOFTWARE	COMMON CAUSE FAILURE OF DPS PROCESSORS
		1.00E+00	FL_T-LOPP061	Sequence tag for T-LOPP061
		1.14E-05	R13-INV-FC-CCFSR_ALL	CCF of all components in group 'R13-INV-FC-CCFSR'
58	1.52E-11	7.60E-02	%T-LOPP-WRH345	WEATHER RELATED LOSS OF PREFERRED POWER DUE TO HURRICANE H3/4/5
		2.50E-07	C12-ROD-CF-SCRAM	CCF OF CONTROL RODS TO INSERT
		8.00E-04	C41-UV_-CC-F004A	CHECK VALVE F004A FAILS TO OPEN
		1.00E+00	FL_AT-T-LOPP015	Sequence tag for AT-T-LOPP015
59	1.52E-11	7.60E-02	%T-LOPP-WRH345	WEATHER RELATED LOSS OF PREFERRED POWER DUE TO HURRICANE H3/4/5
		2.50E-07	C12-ROD-CF-SCRAM	CCF OF CONTROL RODS TO INSERT
		8.00E-04	C41-UV_-CC-F004B	CHECK VALVE F004B FAILS TO OPEN
		1.00E+00	FL_AT-T-LOPP015	Sequence tag for AT-T-LOPP015
60	1.52E-11	7.60E-02	%T-LOPP-WRH345	WEATHER RELATED LOSS OF PREFERRED POWER DUE TO HURRICANE H3/4/5
		2.50E-07	C12-ROD-CF-SCRAM	CCF OF CONTROL RODS TO INSERT
		8.00E-04	C41-UV_-CC-F005A	CHECK VALVE F005A FAILS TO OPEN
		1.00E+00	FL_AT-T-LOPP015	Sequence tag for AT-T-LOPP015

Table 14.6-2

High Wind At-Power Cutset Report

CDF =8.5E-09/yr
Top 200 Cutsets

61	1.52E-11	7.60E-02	%T-LOPP-WRH345	WEATHER RELATED LOSS OF PREFERRED POWER DUE TO HURRICANE H3/4/5
		2.50E-07	C12-ROD-CF-SCRAM	CCF OF CONTROL RODS TO INSERT
		8.00E-04	C41-UV_-CC-F005B	CHECK VALVE F005B FAILS TO OPEN
		1.00E+00	FL_AT-T-LOPP015	Sequence tag for AT-T-LOPP015
62	1.52E-11	7.60E-02	%T-LOPP-WRH345	WEATHER RELATED LOSS OF PREFERRED POWER DUE TO HURRICANE H3/4/5
		1.00E-04	C63-CCFSOFTWARE	Common cause failure of software
		2.00E-06	C72-LOG-FC-D_1_2_3	CCF of three components: C72-LOG-FC-D1DPS & C72-LOG-FC-D2DPS & C72-LOG-FC-D3DPS
		1.00E+00	FL_T-LOPP061	Sequence tag for T-LOPP061
63	1.51E-11	5.02E-07	%T-LOPP-WRT5	WEATHER RELATED LOSS OF PREFERRED POWER DUE TO CATEGORY F5
		3.00E-05	C63-DTM-FC-ESFLG_ALL	CCF of all components in group 'C63-DTM-FC-ESFLG'
		1.00E+00	FL_T-LOPP061	Sequence tag for T-LOPP061
64	1.41E-11	7.60E-02	%T-LOPP-WRH345	WEATHER RELATED LOSS OF PREFERRED POWER DUE TO HURRICANE H3/4/5
		1.00E-04	C63-CCFSOFTWARE	Common cause failure of software
		1.86E-06	C72-LDD-FC-LOADS	COMMON CAUSE FAILURE OF DPS LOAD DRIVERS
		1.00E+00	FL_T-LOPP061	Sequence tag for T-LOPP061

Table 14.6-2

High Wind At-Power Cutset Report

CDF =8.5E-09/yr
Top 200 Cutsets

65	1.41E-11	7.60E-02	%T-LOPP-WRH345	WEATHER RELATED LOSS OF PREFERRED POWER DUE TO HURRICANE H3/4/5
		1.86E-06	C63-LDD-FC-ESFLOADS	CCF OF ALL ESF LOAD DRIVERS
		1.00E-04	C72-CCFSOFTWARE	COMMON CAUSE FAILURE OF DPS PROCESSORS
		1.00E+00	FL_T-LOPP061	Sequence tag for T-LOPP061
66	1.37E-11	7.60E-02	%T-LOPP-WRH345	WEATHER RELATED LOSS OF PREFERRED POWER DUE TO HURRICANE H3/4/5
		1.80E-05	C63-LOG-FC-ESFLG_ALL	CCF of all components in group 'C63-LOG-FC-ESFLG'
		1.00E-05	C72-LOG-FC-D_1_2	CCF of two components: C72-LOG-FC-D1DPS & C72-LOG-FC-D2DPS
		1.00E+00	FL_T-LOPP061	Sequence tag for T-LOPP061
67	1.37E-11	7.60E-02	%T-LOPP-WRH345	WEATHER RELATED LOSS OF PREFERRED POWER DUE TO HURRICANE H3/4/5
		1.80E-05	C63-LOG-FC-ESFLG_ALL	CCF of all components in group 'C63-LOG-FC-ESFLG'
		1.00E-05	C72-LOG-FC-D_1_3	CCF of two components: C72-LOG-FC-D1DPS & C72-LOG-FC-D3DPS
		1.00E+00	FL_T-LOPP061	Sequence tag for T-LOPP061
68	1.37E-11	7.60E-02	%T-LOPP-WRH345	WEATHER RELATED LOSS OF PREFERRED POWER DUE TO HURRICANE H3/4/5
		1.80E-05	C63-LOG-FC-ESFLG_ALL	CCF of all components in group 'C63-LOG-FC-ESFLG'
		1.00E-05	C72-LOG-FC-D_2_3	CCF of two components: C72-LOG-FC-D2DPS & C72-LOG-FC-D3DPS
		1.00E+00	FL_T-LOPP061	Sequence tag for T-LOPP061

Table 14.6-2

High Wind At-Power Cutset Report

CDF =8.5E-09/yr
Top 200 Cutsets

69	1.33E-11	4.42E-06	%T-LOPP-WRT4	WEATHER RELATED LOSS OF PREFERRED POWER DUE TO CATEGORY F4
		3.00E-05	C71-DTM-FC-R_ALL	CCF of all components in group 'C71-DTM-FC-R'
		1.00E-01	C71-XHE-FO-SCRAM	OPERATOR FAILS TO PERFORM MANUAL SCRAM
		1.00E+00	FL_AT-T-LOPP016	Sequence tag for AT-T-LOPP016
70	1.24E-11	7.60E-02	%T-LOPP-WRH345	WEATHER RELATED LOSS OF PREFERRED POWER DUE TO HURRICANE H3/4/5
		1.50E-04	B21-SQV-CC_ALL	CCF of all components in group 'B21-SQV-CC'
		1.00E+00	B32-NONCONDENSE	Non condensable gasses form in ICS sufficiently to require venting
		1.00E-03	B32-SOV-FE-F009A	F009A fails to open on demand
		3.84E-02	B32-TM-LOOPB-IND	ICS LOOP B IN TEST OR MAINTENANCE BY ITSELF
		1.76E-01	B32-XHE-FO-VENT	Operator fails to open vent
		1.00E+00	FL_T-LOPP061	Sequence tag for T-LOPP061
		1.61E-01	XXX-XHE-FO-DEPRESS	OPERATOR FAILS TO RECOGNIZE NEED OF DEPRESSURIZATION
71	1.24E-11	7.60E-02	%T-LOPP-WRH345	WEATHER RELATED LOSS OF PREFERRED POWER DUE TO HURRICANE H3/4/5
		1.50E-04	B21-SQV-CC_ALL	CCF of all components in group 'B21-SQV-CC'
		1.00E+00	B32-NONCONDENSE	Non condensable gasses form in ICS sufficiently to require venting
		1.00E-03	B32-SOV-FE-F009A	F009A fails to open on demand
		3.84E-02	B32-TM-LOOPC-IND	ICS LOOP C IN TEST OR MAINTENANCE BY ITSELF
		1.76E-01	B32-XHE-FO-VENT	Operator fails to open vent
		1.00E+00	FL_T-LOPP061	Sequence tag for T-LOPP061
		1.61E-01	XXX-XHE-FO-DEPRESS	OPERATOR FAILS TO RECOGNIZE NEED OF DEPRESSURIZATION

Table 14.6-2

High Wind At-Power Cutset Report

CDF =8.5E-09/yr
Top 200 Cutsets

72	1.24E-11	7.60E-02	%T-LOPP-WRH345	WEATHER RELATED LOSS OF PREFERRED POWER DUE TO HURRICANE H3/4/5
		1.50E-04	B21-SQV-CC_ALL	CCF of all components in group 'B21-SQV-CC'
		1.00E+00	B32-NONCONDENSE	Non condensable gasses form in ICS sufficiently to require venting
		1.00E-03	B32-SOV-FE-F009A	F009A fails to open on demand
		3.84E-02	B32-TM-LOOPD-IND	ICS LOOP D IN TEST OR MAINTENANCE BY ITSELF
		1.76E-01	B32-XHE-FO-VENT	Operator fails to open vent
		1.00E+00	FL_T-LOPP061	Sequence tag for T-LOPP061
		1.61E-01	XXX-XHE-FO-DEPRESS	OPERATOR FAILS TO RECOGNIZE NEED OF DEPRESSURIZATION
73	1.24E-11	7.60E-02	%T-LOPP-WRH345	WEATHER RELATED LOSS OF PREFERRED POWER DUE TO HURRICANE H3/4/5
		1.50E-04	B21-SQV-CC_ALL	CCF of all components in group 'B21-SQV-CC'
		1.00E+00	B32-NONCONDENSE	Non condensable gasses form in ICS sufficiently to require venting
		1.00E-03	B32-SOV-FE-F009B	SOLENOID VALVE (FAILURE TO ENERGIZE)
		3.84E-02	B32-TM-LOOPA-IND	ICS LOOP A IN TEST OR MAINTENANCE BY ITSELF
		1.76E-01	B32-XHE-FO-VENT	Operator fails to open vent
		1.00E+00	FL_T-LOPP061	Sequence tag for T-LOPP061
		1.61E-01	XXX-XHE-FO-DEPRESS	OPERATOR FAILS TO RECOGNIZE NEED OF DEPRESSURIZATION

Table 14.6-2

High Wind At-Power Cutset Report

CDF =8.5E-09/yr
Top 200 Cutsets

74	1.24E-11	7.60E-02	%T-LOPP-WRH345	WEATHER RELATED LOSS OF PREFERRED POWER DUE TO HURRICANE H3/4/5
		1.50E-04	B21-SQV-CC_ALL	CCF of all components in group 'B21-SQV-CC'
		1.00E+00	B32-NONCONDENSE	Non condensable gasses form in ICS sufficiently to require venting
		1.00E-03	B32-SOV-FE-F009B	SOLENOID VALVE (FAILURE TO ENERGIZE)
		3.84E-02	B32-TM-LOOPC-IND	ICS LOOP C IN TEST OR MAINTENANCE BY ITSELF
		1.76E-01	B32-XHE-FO-VENT	Operator fails to open vent
		1.00E+00	FL_T-LOPP061	Sequence tag for T-LOPP061
		1.61E-01	XXX-XHE-FO-DEPRESS	OPERATOR FAILS TO RECOGNIZE NEED OF DEPRESSURIZATION
75	1.24E-11	7.60E-02	%T-LOPP-WRH345	WEATHER RELATED LOSS OF PREFERRED POWER DUE TO HURRICANE H3/4/5
		1.50E-04	B21-SQV-CC_ALL	CCF of all components in group 'B21-SQV-CC'
		1.00E+00	B32-NONCONDENSE	Non condensable gasses form in ICS sufficiently to require venting
		1.00E-03	B32-SOV-FE-F009B	SOLENOID VALVE (FAILURE TO ENERGIZE)
		3.84E-02	B32-TM-LOOPD-IND	ICS LOOP D IN TEST OR MAINTENANCE BY ITSELF
		1.76E-01	B32-XHE-FO-VENT	Operator fails to open vent
		1.00E+00	FL_T-LOPP061	Sequence tag for T-LOPP061
		1.61E-01	XXX-XHE-FO-DEPRESS	OPERATOR FAILS TO RECOGNIZE NEED OF DEPRESSURIZATION

Table 14.6-2

High Wind At-Power Cutset Report

CDF =8.5E-09/yr
Top 200 Cutsets

76	1.24E-11	7.60E-02	%T-LOPP-WRH345	WEATHER RELATED LOSS OF PREFERRED POWER DUE TO HURRICANE H3/4/5
		1.50E-04	B21-SQV-CC_ALL	CCF of all components in group 'B21-SQV-CC'
		1.00E+00	B32-NONCONDENSE	Non condensable gasses form in ICS sufficiently to require venting
		1.00E-03	B32-SOV-FE-F009C	SOLENOID VALVE (FAILURE TO ENERGIZE)
		3.84E-02	B32-TM-LOOPA-IND	ICS LOOP A IN TEST OR MAINTENANCE BY ITSELF
		1.76E-01	B32-XHE-FO-VENT	Operator fails to open vent
		1.00E+00	FL_T-LOPP061	Sequence tag for T-LOPP061
		1.61E-01	XXX-XHE-FO-DEPRESS	OPERATOR FAILS TO RECOGNIZE NEED OF DEPRESSURIZATION
77	1.24E-11	7.60E-02	%T-LOPP-WRH345	WEATHER RELATED LOSS OF PREFERRED POWER DUE TO HURRICANE H3/4/5
		1.50E-04	B21-SQV-CC_ALL	CCF of all components in group 'B21-SQV-CC'
		1.00E+00	B32-NONCONDENSE	Non condensable gasses form in ICS sufficiently to require venting
		1.00E-03	B32-SOV-FE-F009C	SOLENOID VALVE (FAILURE TO ENERGIZE)
		3.84E-02	B32-TM-LOOPB-IND	ICS LOOP B IN TEST OR MAINTENANCE BY ITSELF
		1.76E-01	B32-XHE-FO-VENT	Operator fails to open vent
		1.00E+00	FL_T-LOPP061	Sequence tag for T-LOPP061
		1.61E-01	XXX-XHE-FO-DEPRESS	OPERATOR FAILS TO RECOGNIZE NEED OF DEPRESSURIZATION

Table 14.6-2

High Wind At-Power Cutset Report

CDF =8.5E-09/yr
Top 200 Cutsets

78	1.24E-11	7.60E-02	%T-LOPP-WRH345	WEATHER RELATED LOSS OF PREFERRED POWER DUE TO HURRICANE H3/4/5
		1.50E-04	B21-SQV-CC_ALL	CCF of all components in group 'B21-SQV-CC'
		1.00E+00	B32-NONCONDENSE	Non condensable gasses form in ICS sufficiently to require venting
		1.00E-03	B32-SOV-FE-F009C	SOLENOID VALVE (FAILURE TO ENERGIZE)
		3.84E-02	B32-TM-LOOPD-IND	ICS LOOP D IN TEST OR MAINTENANCE BY ITSELF
		1.76E-01	B32-XHE-FO-VENT	Operator fails to open vent
		1.00E+00	FL_T-LOPP061	Sequence tag for T-LOPP061
		1.61E-01	XXX-XHE-FO-DEPRESS	OPERATOR FAILS TO RECOGNIZE NEED OF DEPRESSURIZATION
79	1.24E-11	7.60E-02	%T-LOPP-WRH345	WEATHER RELATED LOSS OF PREFERRED POWER DUE TO HURRICANE H3/4/5
		1.50E-04	B21-SQV-CC_ALL	CCF of all components in group 'B21-SQV-CC'
		1.00E+00	B32-NONCONDENSE	Non condensable gasses form in ICS sufficiently to require venting
		1.00E-03	B32-SOV-FE-F009D	SOLENOID VALVE (FAILURE TO ENERGIZE)
		3.84E-02	B32-TM-LOOPA-IND	ICS LOOP A IN TEST OR MAINTENANCE BY ITSELF
		1.76E-01	B32-XHE-FO-VENT	Operator fails to open vent
		1.00E+00	FL_T-LOPP061	Sequence tag for T-LOPP061
		1.61E-01	XXX-XHE-FO-DEPRESS	OPERATOR FAILS TO RECOGNIZE NEED OF DEPRESSURIZATION

Table 14.6-2

High Wind At-Power Cutset Report

CDF =8.5E-09/yr
Top 200 Cutsets

80	1.24E-11	7.60E-02	%T-LOPP-WRH345	WEATHER RELATED LOSS OF PREFERRED POWER DUE TO HURRICANE H3/4/5
		1.50E-04	B21-SQV-CC_ALL	CCF of all components in group 'B21-SQV-CC'
		1.00E+00	B32-NONCONDENSE	Non condensable gasses form in ICS sufficiently to require venting
		1.00E-03	B32-SOV-FE-F009D	SOLENOID VALVE (FAILURE TO ENERGIZE)
		3.84E-02	B32-TM-LOOPB-IND	ICS LOOP B IN TEST OR MAINTENANCE BY ITSELF
		1.76E-01	B32-XHE-FO-VENT	Operator fails to open vent
		1.00E+00	FL_T-LOPP061	Sequence tag for T-LOPP061
		1.61E-01	XXX-XHE-FO-DEPRESS	OPERATOR FAILS TO RECOGNIZE NEED OF DEPRESSURIZATION
81	1.24E-11	7.60E-02	%T-LOPP-WRH345	WEATHER RELATED LOSS OF PREFERRED POWER DUE TO HURRICANE H3/4/5
		1.50E-04	B21-SQV-CC_ALL	CCF of all components in group 'B21-SQV-CC'
		1.00E+00	B32-NONCONDENSE	Non condensable gasses form in ICS sufficiently to require venting
		1.00E-03	B32-SOV-FE-F009D	SOLENOID VALVE (FAILURE TO ENERGIZE)
		3.84E-02	B32-TM-LOOPC-IND	ICS LOOP C IN TEST OR MAINTENANCE BY ITSELF
		1.76E-01	B32-XHE-FO-VENT	Operator fails to open vent
		1.00E+00	FL_T-LOPP061	Sequence tag for T-LOPP061
		1.61E-01	XXX-XHE-FO-DEPRESS	OPERATOR FAILS TO RECOGNIZE NEED OF DEPRESSURIZATION

Table 14.6-2

High Wind At-Power Cutset Report

CDF =8.5E-09/yr
Top 200 Cutsets

82	1.24E-11	7.60E-02	%T-LOPP-WRH345	WEATHER RELATED LOSS OF PREFERRED POWER DUE TO HURRICANE H3/4/5
		1.50E-04	B21-SQV-CC_ALL	CCF of all components in group 'B21-SQV-CC'
		1.00E+00	B32-NONCONDENSE	Non condensable gasses form in ICS sufficiently to require venting
		1.00E-03	B32-SOV-FE-F010A	F010A fails to open on demand
		3.84E-02	B32-TM-LOOPB-IND	ICS LOOP B IN TEST OR MAINTENANCE BY ITSELF
		1.76E-01	B32-XHE-FO-VENT	Operator fails to open vent
		1.00E+00	FL_T-LOPP061	Sequence tag for T-LOPP061
		1.61E-01	XXX-XHE-FO-DEPRESS	OPERATOR FAILS TO RECOGNIZE NEED OF DEPRESSURIZATION
83	1.24E-11	7.60E-02	%T-LOPP-WRH345	WEATHER RELATED LOSS OF PREFERRED POWER DUE TO HURRICANE H3/4/5
		1.50E-04	B21-SQV-CC_ALL	CCF of all components in group 'B21-SQV-CC'
		1.00E+00	B32-NONCONDENSE	Non condensable gasses form in ICS sufficiently to require venting
		1.00E-03	B32-SOV-FE-F010A	F010A fails to open on demand
		3.84E-02	B32-TM-LOOPC-IND	ICS LOOP C IN TEST OR MAINTENANCE BY ITSELF
		1.76E-01	B32-XHE-FO-VENT	Operator fails to open vent
		1.00E+00	FL_T-LOPP061	Sequence tag for T-LOPP061
		1.61E-01	XXX-XHE-FO-DEPRESS	OPERATOR FAILS TO RECOGNIZE NEED OF DEPRESSURIZATION

Table 14.6-2

High Wind At-Power Cutset Report

CDF =8.5E-09/yr
Top 200 Cutsets

84	1.24E-11	7.60E-02	%T-LOPP-WRH345	WEATHER RELATED LOSS OF PREFERRED POWER DUE TO HURRICANE H3/4/5
		1.50E-04	B21-SQV-CC_ALL	CCF of all components in group 'B21-SQV-CC'
		1.00E+00	B32-NONCONDENSE	Non condensable gasses form in ICS sufficiently to require venting
		1.00E-03	B32-SOV-FE-F010A	F010A fails to open on demand
		3.84E-02	B32-TM-LOOPD-IND	ICS LOOP D IN TEST OR MAINTENANCE BY ITSELF
		1.76E-01	B32-XHE-FO-VENT	Operator fails to open vent
		1.00E+00	FL_T-LOPP061	Sequence tag for T-LOPP061
		1.61E-01	XXX-XHE-FO-DEPRESS	OPERATOR FAILS TO RECOGNIZE NEED OF DEPRESSURIZATION
85	1.24E-11	7.60E-02	%T-LOPP-WRH345	WEATHER RELATED LOSS OF PREFERRED POWER DUE TO HURRICANE H3/4/5
		1.50E-04	B21-SQV-CC_ALL	CCF of all components in group 'B21-SQV-CC'
		1.00E+00	B32-NONCONDENSE	Non condensable gasses form in ICS sufficiently to require venting
		1.00E-03	B32-SOV-FE-F010B	SOLENOID VALVE (FAILURE TO ENERGIZE)
		3.84E-02	B32-TM-LOOPA-IND	ICS LOOP A IN TEST OR MAINTENANCE BY ITSELF
		1.76E-01	B32-XHE-FO-VENT	Operator fails to open vent
		1.00E+00	FL_T-LOPP061	Sequence tag for T-LOPP061
		1.61E-01	XXX-XHE-FO-DEPRESS	OPERATOR FAILS TO RECOGNIZE NEED OF DEPRESSURIZATION

Table 14.6-2

High Wind At-Power Cutset Report

CDF =8.5E-09/yr
Top 200 Cutsets

86	1.24E-11	7.60E-02	%T-LOPP-WRH345	WEATHER RELATED LOSS OF PREFERRED POWER DUE TO HURRICANE H3/4/5
		1.50E-04	B21-SQV-CC_ALL	CCF of all components in group 'B21-SQV-CC'
		1.00E+00	B32-NONCONDENSE	Non condensable gasses form in ICS sufficiently to require venting
		1.00E-03	B32-SOV-FE-F010B	SOLENOID VALVE (FAILURE TO ENERGIZE)
		3.84E-02	B32-TM-LOOPC-IND	ICS LOOP C IN TEST OR MAINTENANCE BY ITSELF
		1.76E-01	B32-XHE-FO-VENT	Operator fails to open vent
		1.00E+00	FL_T-LOPP061	Sequence tag for T-LOPP061
		1.61E-01	XXX-XHE-FO-DEPRESS	OPERATOR FAILS TO RECOGNIZE NEED OF DEPRESSURIZATION
87	1.24E-11	7.60E-02	%T-LOPP-WRH345	WEATHER RELATED LOSS OF PREFERRED POWER DUE TO HURRICANE H3/4/5
		1.50E-04	B21-SQV-CC_ALL	CCF of all components in group 'B21-SQV-CC'
		1.00E+00	B32-NONCONDENSE	Non condensable gasses form in ICS sufficiently to require venting
		1.00E-03	B32-SOV-FE-F010B	SOLENOID VALVE (FAILURE TO ENERGIZE)
		3.84E-02	B32-TM-LOOPD-IND	ICS LOOP D IN TEST OR MAINTENANCE BY ITSELF
		1.76E-01	B32-XHE-FO-VENT	Operator fails to open vent
		1.00E+00	FL_T-LOPP061	Sequence tag for T-LOPP061
		1.61E-01	XXX-XHE-FO-DEPRESS	OPERATOR FAILS TO RECOGNIZE NEED OF DEPRESSURIZATION

Table 14.6-2

High Wind At-Power Cutset Report

CDF =8.5E-09/yr
Top 200 Cutsets

88	1.24E-11	7.60E-02	%T-LOPP-WRH345	WEATHER RELATED LOSS OF PREFERRED POWER DUE TO HURRICANE H3/4/5
		1.50E-04	B21-SQV-CC_ALL	CCF of all components in group 'B21-SQV-CC'
		1.00E+00	B32-NONCONDENSE	Non condensable gasses form in ICS sufficiently to require venting
		1.00E-03	B32-SOV-FE-F010C	SOLENOID VALVE (FAILURE TO ENERGIZE)
		3.84E-02	B32-TM-LOOPA-IND	ICS LOOP A IN TEST OR MAINTENANCE BY ITSELF
		1.76E-01	B32-XHE-FO-VENT	Operator fails to open vent
		1.00E+00	FL_T-LOPP061	Sequence tag for T-LOPP061
		1.61E-01	XXX-XHE-FO-DEPRESS	OPERATOR FAILS TO RECOGNIZE NEED OF DEPRESSURIZATION
89	1.24E-11	7.60E-02	%T-LOPP-WRH345	WEATHER RELATED LOSS OF PREFERRED POWER DUE TO HURRICANE H3/4/5
		1.50E-04	B21-SQV-CC_ALL	CCF of all components in group 'B21-SQV-CC'
		1.00E+00	B32-NONCONDENSE	Non condensable gasses form in ICS sufficiently to require venting
		1.00E-03	B32-SOV-FE-F010C	SOLENOID VALVE (FAILURE TO ENERGIZE)
		3.84E-02	B32-TM-LOOPB-IND	ICS LOOP B IN TEST OR MAINTENANCE BY ITSELF
		1.76E-01	B32-XHE-FO-VENT	Operator fails to open vent
		1.00E+00	FL_T-LOPP061	Sequence tag for T-LOPP061
		1.61E-01	XXX-XHE-FO-DEPRESS	OPERATOR FAILS TO RECOGNIZE NEED OF DEPRESSURIZATION

Table 14.6-2

High Wind At-Power Cutset Report

CDF =8.5E-09/yr
Top 200 Cutsets

90	1.24E-11	7.60E-02	%T-LOPP-WRH345	WEATHER RELATED LOSS OF PREFERRED POWER DUE TO HURRICANE H3/4/5
		1.50E-04	B21-SQV-CC_ALL	CCF of all components in group 'B21-SQV-CC'
		1.00E+00	B32-NONCONDENSE	Non condensable gasses form in ICS sufficiently to require venting
		1.00E-03	B32-SOV-FE-F010C	SOLENOID VALVE (FAILURE TO ENERGIZE)
		3.84E-02	B32-TM-LOOPD-IND	ICS LOOP D IN TEST OR MAINTENANCE BY ITSELF
		1.76E-01	B32-XHE-FO-VENT	Operator fails to open vent
		1.00E+00	FL_T-LOPP061	Sequence tag for T-LOPP061
		1.61E-01	XXX-XHE-FO-DEPRESS	OPERATOR FAILS TO RECOGNIZE NEED OF DEPRESSURIZATION
91	1.24E-11	7.60E-02	%T-LOPP-WRH345	WEATHER RELATED LOSS OF PREFERRED POWER DUE TO HURRICANE H3/4/5
		1.50E-04	B21-SQV-CC_ALL	CCF of all components in group 'B21-SQV-CC'
		1.00E+00	B32-NONCONDENSE	Non condensable gasses form in ICS sufficiently to require venting
		1.00E-03	B32-SOV-FE-F010D	SOLENOID VALVE (FAILURE TO ENERGIZE)
		3.84E-02	B32-TM-LOOPA-IND	ICS LOOP A IN TEST OR MAINTENANCE BY ITSELF
		1.76E-01	B32-XHE-FO-VENT	Operator fails to open vent
		1.00E+00	FL_T-LOPP061	Sequence tag for T-LOPP061
		1.61E-01	XXX-XHE-FO-DEPRESS	OPERATOR FAILS TO RECOGNIZE NEED OF DEPRESSURIZATION

Table 14.6-2

High Wind At-Power Cutset Report

CDF =8.5E-09/yr
Top 200 Cutsets

92	1.24E-11	7.60E-02	%T-LOPP-WRH345	WEATHER RELATED LOSS OF PREFERRED POWER DUE TO HURRICANE H3/4/5
		1.50E-04	B21-SQV-CC_ALL	CCF of all components in group 'B21-SQV-CC'
		1.00E+00	B32-NONCONDENSE	Non condensable gasses form in ICS sufficiently to require venting
		1.00E-03	B32-SOV-FE-F010D	SOLENOID VALVE (FAILURE TO ENERGIZE)
		3.84E-02	B32-TM-LOOPB-IND	ICS LOOP B IN TEST OR MAINTENANCE BY ITSELF
		1.76E-01	B32-XHE-FO-VENT	Operator fails to open vent
		1.00E+00	FL_T-LOPP061	Sequence tag for T-LOPP061
		1.61E-01	XXX-XHE-FO-DEPRESS	OPERATOR FAILS TO RECOGNIZE NEED OF DEPRESSURIZATION
93	1.24E-11	7.60E-02	%T-LOPP-WRH345	WEATHER RELATED LOSS OF PREFERRED POWER DUE TO HURRICANE H3/4/5
		1.50E-04	B21-SQV-CC_ALL	CCF of all components in group 'B21-SQV-CC'
		1.00E+00	B32-NONCONDENSE	Non condensable gasses form in ICS sufficiently to require venting
		1.00E-03	B32-SOV-FE-F010D	SOLENOID VALVE (FAILURE TO ENERGIZE)
		3.84E-02	B32-TM-LOOPC-IND	ICS LOOP C IN TEST OR MAINTENANCE BY ITSELF
		1.76E-01	B32-XHE-FO-VENT	Operator fails to open vent
		1.00E+00	FL_T-LOPP061	Sequence tag for T-LOPP061
		1.61E-01	XXX-XHE-FO-DEPRESS	OPERATOR FAILS TO RECOGNIZE NEED OF DEPRESSURIZATION

Table 14.6-2

High Wind At-Power Cutset Report

CDF =8.5E-09/yr
Top 200 Cutsets

94	1.24E-11	7.60E-02	%T-LOPP-WRH345	WEATHER RELATED LOSS OF PREFERRED POWER DUE TO HURRICANE H3/4/5
		1.00E+00	B32-NONCONDENSE	Non condensable gasses form in ICS sufficiently to require venting
		1.00E-03	B32-SOV-FE-F009A	F009A fails to open on demand
		3.84E-02	B32-TM-LOOPB-IND	ICS LOOP B IN TEST OR MAINTENANCE BY ITSELF
		1.76E-01	B32-XHE-FO-VENT	Operator fails to open vent
		1.50E-04	E50-SQV-CC-INJ_ALL	CCF of all components in group 'E50-SQV-CC-INJ'
		1.00E+00	FL_T-LOPP050	Sequence tag for T-LOPP050
		1.61E-01	XXX-XHE-FO-LPMAKEUP	OP. FAILS TO RECOG. NEED FOR LOW PRESS. MAKEUP AFTER DEPRESSURIZATION
95	1.24E-11	7.60E-02	%T-LOPP-WRH345	WEATHER RELATED LOSS OF PREFERRED POWER DUE TO HURRICANE H3/4/5
		1.00E+00	B32-NONCONDENSE	Non condensable gasses form in ICS sufficiently to require venting
		1.00E-03	B32-SOV-FE-F009A	F009A fails to open on demand
		3.84E-02	B32-TM-LOOPC-IND	ICS LOOP C IN TEST OR MAINTENANCE BY ITSELF
		1.76E-01	B32-XHE-FO-VENT	Operator fails to open vent
		1.50E-04	E50-SQV-CC-INJ_ALL	CCF of all components in group 'E50-SQV-CC-INJ'
		1.00E+00	FL_T-LOPP050	Sequence tag for T-LOPP050
		1.61E-01	XXX-XHE-FO-LPMAKEUP	OP. FAILS TO RECOG. NEED FOR LOW PRESS. MAKEUP AFTER DEPRESSURIZATION

Table 14.6-2

High Wind At-Power Cutset Report

CDF =8.5E-09/yr
Top 200 Cutsets

96	1.24E-11	7.60E-02	%T-LOPP-WRH345	WEATHER RELATED LOSS OF PREFERRED POWER DUE TO HURRICANE H3/4/5
		1.00E+00	B32-NONCONDENSE	Non condensable gasses form in ICS sufficiently to require venting
		1.00E-03	B32-SOV-FE-F009A	F009A fails to open on demand
		3.84E-02	B32-TM-LOOPD-IND	ICS LOOP D IN TEST OR MAINTENANCE BY ITSELF
		1.76E-01	B32-XHE-FO-VENT	Operator fails to open vent
		1.50E-04	E50-SQV-CC-INJ_ALL	CCF of all components in group 'E50-SQV-CC-INJ'
		1.00E+00	FL_T-LOPP050	Sequence tag for T-LOPP050
		1.61E-01	XXX-XHE-FO-LPMAKEUP	OP. FAILS TO RECOG. NEED FOR LOW PRESS. MAKEUP AFTER DEPRESSURIZATION
97	1.24E-11	7.60E-02	%T-LOPP-WRH345	WEATHER RELATED LOSS OF PREFERRED POWER DUE TO HURRICANE H3/4/5
		1.00E+00	B32-NONCONDENSE	Non condensable gasses form in ICS sufficiently to require venting
		1.00E-03	B32-SOV-FE-F009B	SOLENOID VALVE (FAILURE TO ENERGIZE)
		3.84E-02	B32-TM-LOOPA-IND	ICS LOOP A IN TEST OR MAINTENANCE BY ITSELF
		1.76E-01	B32-XHE-FO-VENT	Operator fails to open vent
		1.50E-04	E50-SQV-CC-INJ_ALL	CCF of all components in group 'E50-SQV-CC-INJ'
		1.00E+00	FL_T-LOPP050	Sequence tag for T-LOPP050
		1.61E-01	XXX-XHE-FO-LPMAKEUP	OP. FAILS TO RECOG. NEED FOR LOW PRESS. MAKEUP AFTER DEPRESSURIZATION

Table 14.6-2

High Wind At-Power Cutset Report

CDF =8.5E-09/yr
Top 200 Cutsets

98	1.24E-11	7.60E-02	%T-LOPP-WRH345	WEATHER RELATED LOSS OF PREFERRED POWER DUE TO HURRICANE H3/4/5
		1.00E+00	B32-NONCONDENSE	Non condensable gasses form in ICS sufficiently to require venting
		1.00E-03	B32-SOV-FE-F009B	SOLENOID VALVE (FAILURE TO ENERGIZE)
		3.84E-02	B32-TM-LOOPC-IND	ICS LOOP C IN TEST OR MAINTENANCE BY ITSELF
		1.76E-01	B32-XHE-FO-VENT	Operator fails to open vent
		1.50E-04	E50-SQV-CC-INJ_ALL	CCF of all components in group 'E50-SQV-CC-INJ'
		1.00E+00	FL_T-LOPP050	Sequence tag for T-LOPP050
		1.61E-01	XXX-XHE-FO-LPMAKEUP	OP. FAILS TO RECOG. NEED FOR LOW PRESS. MAKEUP AFTER DEPRESSURIZATION
99	1.24E-11	7.60E-02	%T-LOPP-WRH345	WEATHER RELATED LOSS OF PREFERRED POWER DUE TO HURRICANE H3/4/5
		1.00E+00	B32-NONCONDENSE	Non condensable gasses form in ICS sufficiently to require venting
		1.00E-03	B32-SOV-FE-F009B	SOLENOID VALVE (FAILURE TO ENERGIZE)
		3.84E-02	B32-TM-LOOPD-IND	ICS LOOP D IN TEST OR MAINTENANCE BY ITSELF
		1.76E-01	B32-XHE-FO-VENT	Operator fails to open vent
		1.50E-04	E50-SQV-CC-INJ_ALL	CCF of all components in group 'E50-SQV-CC-INJ'
		1.00E+00	FL_T-LOPP050	Sequence tag for T-LOPP050
		1.61E-01	XXX-XHE-FO-LPMAKEUP	OP. FAILS TO RECOG. NEED FOR LOW PRESS. MAKEUP AFTER DEPRESSURIZATION

Table 14.6-2

High Wind At-Power Cutset Report

CDF =8.5E-09/yr
Top 200 Cutsets

100	1.24E-11	7.60E-02	%T-LOPP-WRH345	WEATHER RELATED LOSS OF PREFERRED POWER DUE TO HURRICANE H3/4/5
		1.00E+00	B32-NONCONDENSE	Non condensable gasses form in ICS sufficiently to require venting
		1.00E-03	B32-SOV-FE-F009C	SOLENOID VALVE (FAILURE TO ENERGIZE)
		3.84E-02	B32-TM-LOOPA-IND	ICS LOOP A IN TEST OR MAINTENANCE BY ITSELF
		1.76E-01	B32-XHE-FO-VENT	Operator fails to open vent
		1.50E-04	E50-SQV-CC-INJ_ALL	CCF of all components in group 'E50-SQV-CC-INJ'
		1.00E+00	FL_T-LOPP050	Sequence tag for T-LOPP050
		1.61E-01	XXX-XHE-FO-LPMAKEUP	OP. FAILS TO RECOG. NEED FOR LOW PRESS. MAKEUP AFTER DEPRESSURIZATION
101	1.24E-11	7.60E-02	%T-LOPP-WRH345	WEATHER RELATED LOSS OF PREFERRED POWER DUE TO HURRICANE H3/4/5
		1.00E+00	B32-NONCONDENSE	Non condensable gasses form in ICS sufficiently to require venting
		1.00E-03	B32-SOV-FE-F009C	SOLENOID VALVE (FAILURE TO ENERGIZE)
		3.84E-02	B32-TM-LOOPB-IND	ICS LOOP B IN TEST OR MAINTENANCE BY ITSELF
		1.76E-01	B32-XHE-FO-VENT	Operator fails to open vent
		1.50E-04	E50-SQV-CC-INJ_ALL	CCF of all components in group 'E50-SQV-CC-INJ'
		1.00E+00	FL_T-LOPP050	Sequence tag for T-LOPP050
		1.61E-01	XXX-XHE-FO-LPMAKEUP	OP. FAILS TO RECOG. NEED FOR LOW PRESS. MAKEUP AFTER DEPRESSURIZATION

Table 14.6-2

High Wind At-Power Cutset Report

CDF =8.5E-09/yr
Top 200 Cutsets

102	1.24E-11	7.60E-02	%T-LOPP-WRH345	WEATHER RELATED LOSS OF PREFERRED POWER DUE TO HURRICANE H3/4/5
		1.00E+00	B32-NONCONDENSE	Non condensable gasses form in ICS sufficiently to require venting
		1.00E-03	B32-SOV-FE-F009C	SOLENOID VALVE (FAILURE TO ENERGIZE)
		3.84E-02	B32-TM-LOOPD-IND	ICS LOOP D IN TEST OR MAINTENANCE BY ITSELF
		1.76E-01	B32-XHE-FO-VENT	Operator fails to open vent
		1.50E-04	E50-SQV-CC-INJ_ALL	CCF of all components in group 'E50-SQV-CC-INJ'
		1.00E+00	FL_T-LOPP050	Sequence tag for T-LOPP050
		1.61E-01	XXX-XHE-FO-LPMAKEUP	OP. FAILS TO RECOG. NEED FOR LOW PRESS. MAKEUP AFTER DEPRESSURIZATION
103	1.24E-11	7.60E-02	%T-LOPP-WRH345	WEATHER RELATED LOSS OF PREFERRED POWER DUE TO HURRICANE H3/4/5
		1.00E+00	B32-NONCONDENSE	Non condensable gasses form in ICS sufficiently to require venting
		1.00E-03	B32-SOV-FE-F009D	SOLENOID VALVE (FAILURE TO ENERGIZE)
		3.84E-02	B32-TM-LOOPA-IND	ICS LOOP A IN TEST OR MAINTENANCE BY ITSELF
		1.76E-01	B32-XHE-FO-VENT	Operator fails to open vent
		1.50E-04	E50-SQV-CC-INJ_ALL	CCF of all components in group 'E50-SQV-CC-INJ'
		1.00E+00	FL_T-LOPP050	Sequence tag for T-LOPP050
		1.61E-01	XXX-XHE-FO-LPMAKEUP	OP. FAILS TO RECOG. NEED FOR LOW PRESS. MAKEUP AFTER DEPRESSURIZATION

Table 14.6-2

High Wind At-Power Cutset Report

CDF =8.5E-09/yr
Top 200 Cutsets

104	1.24E-11	7.60E-02	%T-LOPP-WRH345	WEATHER RELATED LOSS OF PREFERRED POWER DUE TO HURRICANE H3/4/5
		1.00E+00	B32-NONCONDENSE	Non condensable gasses form in ICS sufficiently to require venting
		1.00E-03	B32-SOV-FE-F009D	SOLENOID VALVE (FAILURE TO ENERGIZE)
		3.84E-02	B32-TM-LOOPB-IND	ICS LOOP B IN TEST OR MAINTENANCE BY ITSELF
		1.76E-01	B32-XHE-FO-VENT	Operator fails to open vent
		1.50E-04	E50-SQV-CC-INJ_ALL	CCF of all components in group 'E50-SQV-CC-INJ'
		1.00E+00	FL_T-LOPP050	Sequence tag for T-LOPP050
		1.61E-01	XXX-XHE-FO-LPMAKEUP	OP. FAILS TO RECOG. NEED FOR LOW PRESS. MAKEUP AFTER DEPRESSURIZATION
105	1.24E-11	7.60E-02	%T-LOPP-WRH345	WEATHER RELATED LOSS OF PREFERRED POWER DUE TO HURRICANE H3/4/5
		1.00E+00	B32-NONCONDENSE	Non condensable gasses form in ICS sufficiently to require venting
		1.00E-03	B32-SOV-FE-F009D	SOLENOID VALVE (FAILURE TO ENERGIZE)
		3.84E-02	B32-TM-LOOPC-IND	ICS LOOP C IN TEST OR MAINTENANCE BY ITSELF
		1.76E-01	B32-XHE-FO-VENT	Operator fails to open vent
		1.50E-04	E50-SQV-CC-INJ_ALL	CCF of all components in group 'E50-SQV-CC-INJ'
		1.00E+00	FL_T-LOPP050	Sequence tag for T-LOPP050
		1.61E-01	XXX-XHE-FO-LPMAKEUP	OP. FAILS TO RECOG. NEED FOR LOW PRESS. MAKEUP AFTER DEPRESSURIZATION

Table 14.6-2

High Wind At-Power Cutset Report

CDF =8.5E-09/yr
Top 200 Cutsets

106	1.24E-11	7.60E-02	%T-LOPP-WRH345	WEATHER RELATED LOSS OF PREFERRED POWER DUE TO HURRICANE H3/4/5
		1.00E+00	B32-NONCONDENSE	Non condensable gasses form in ICS sufficiently to require venting
		1.00E-03	B32-SOV-FE-F010A	F010A fails to open on demand
		3.84E-02	B32-TM-LOOPB-IND	ICS LOOP B IN TEST OR MAINTENANCE BY ITSELF
		1.76E-01	B32-XHE-FO-VENT	Operator fails to open vent
		1.50E-04	E50-SQV-CC-INJ_ALL	CCF of all components in group 'E50-SQV-CC-INJ'
		1.00E+00	FL_T-LOPP050	Sequence tag for T-LOPP050
		1.61E-01	XXX-XHE-FO-LPMAKEUP	OP. FAILS TO RECOG. NEED FOR LOW PRESS. MAKEUP AFTER DEPRESSURIZATION
107	1.24E-11	7.60E-02	%T-LOPP-WRH345	WEATHER RELATED LOSS OF PREFERRED POWER DUE TO HURRICANE H3/4/5
		1.00E+00	B32-NONCONDENSE	Non condensable gasses form in ICS sufficiently to require venting
		1.00E-03	B32-SOV-FE-F010A	F010A fails to open on demand
		3.84E-02	B32-TM-LOOPC-IND	ICS LOOP C IN TEST OR MAINTENANCE BY ITSELF
		1.76E-01	B32-XHE-FO-VENT	Operator fails to open vent
		1.50E-04	E50-SQV-CC-INJ_ALL	CCF of all components in group 'E50-SQV-CC-INJ'
		1.00E+00	FL_T-LOPP050	Sequence tag for T-LOPP050
		1.61E-01	XXX-XHE-FO-LPMAKEUP	OP. FAILS TO RECOG. NEED FOR LOW PRESS. MAKEUP AFTER DEPRESSURIZATION

Table 14.6-2

High Wind At-Power Cutset Report

CDF =8.5E-09/yr
Top 200 Cutsets

108	1.24E-11	7.60E-02	%T-LOPP-WRH345	WEATHER RELATED LOSS OF PREFERRED POWER DUE TO HURRICANE H3/4/5
		1.00E+00	B32-NONCONDENSE	Non condensable gasses form in ICS sufficiently to require venting
		1.00E-03	B32-SOV-FE-F010A	F010A fails to open on demand
		3.84E-02	B32-TM-LOOPD-IND	ICS LOOP D IN TEST OR MAINTENANCE BY ITSELF
		1.76E-01	B32-XHE-FO-VENT	Operator fails to open vent
		1.50E-04	E50-SQV-CC-INJ_ALL	CCF of all components in group 'E50-SQV-CC-INJ'
		1.00E+00	FL_T-LOPP050	Sequence tag for T-LOPP050
		1.61E-01	XXX-XHE-FO-LPMAKEUP	OP. FAILS TO RECOG. NEED FOR LOW PRESS. MAKEUP AFTER DEPRESSURIZATION
109	1.24E-11	7.60E-02	%T-LOPP-WRH345	WEATHER RELATED LOSS OF PREFERRED POWER DUE TO HURRICANE H3/4/5
		1.00E+00	B32-NONCONDENSE	Non condensable gasses form in ICS sufficiently to require venting
		1.00E-03	B32-SOV-FE-F010B	SOLENOID VALVE (FAILURE TO ENERGIZE)
		3.84E-02	B32-TM-LOOPA-IND	ICS LOOP A IN TEST OR MAINTENANCE BY ITSELF
		1.76E-01	B32-XHE-FO-VENT	Operator fails to open vent
		1.50E-04	E50-SQV-CC-INJ_ALL	CCF of all components in group 'E50-SQV-CC-INJ'
		1.00E+00	FL_T-LOPP050	Sequence tag for T-LOPP050
		1.61E-01	XXX-XHE-FO-LPMAKEUP	OP. FAILS TO RECOG. NEED FOR LOW PRESS. MAKEUP AFTER DEPRESSURIZATION

Table 14.6-2

High Wind At-Power Cutset Report

CDF =8.5E-09/yr
Top 200 Cutsets

110	1.24E-11	7.60E-02	%T-LOPP-WRH345	WEATHER RELATED LOSS OF PREFERRED POWER DUE TO HURRICANE H3/4/5
		1.00E+00	B32-NONCONDENSE	Non condensable gasses form in ICS sufficiently to require venting
		1.00E-03	B32-SOV-FE-F010B	SOLENOID VALVE (FAILURE TO ENERGIZE)
		3.84E-02	B32-TM-LOOPC-IND	ICS LOOP C IN TEST OR MAINTENANCE BY ITSELF
		1.76E-01	B32-XHE-FO-VENT	Operator fails to open vent
		1.50E-04	E50-SQV-CC-INJ_ALL	CCF of all components in group 'E50-SQV-CC-INJ'
		1.00E+00	FL_T-LOPP050	Sequence tag for T-LOPP050
		1.61E-01	XXX-XHE-FO-LPMAKEUP	OP. FAILS TO RECOG. NEED FOR LOW PRESS. MAKEUP AFTER DEPRESSURIZATION
111	1.24E-11	7.60E-02	%T-LOPP-WRH345	WEATHER RELATED LOSS OF PREFERRED POWER DUE TO HURRICANE H3/4/5
		1.00E+00	B32-NONCONDENSE	Non condensable gasses form in ICS sufficiently to require venting
		1.00E-03	B32-SOV-FE-F010B	SOLENOID VALVE (FAILURE TO ENERGIZE)
		3.84E-02	B32-TM-LOOPD-IND	ICS LOOP D IN TEST OR MAINTENANCE BY ITSELF
		1.76E-01	B32-XHE-FO-VENT	Operator fails to open vent
		1.50E-04	E50-SQV-CC-INJ_ALL	CCF of all components in group 'E50-SQV-CC-INJ'
		1.00E+00	FL_T-LOPP050	Sequence tag for T-LOPP050
		1.61E-01	XXX-XHE-FO-LPMAKEUP	OP. FAILS TO RECOG. NEED FOR LOW PRESS. MAKEUP AFTER DEPRESSURIZATION

Table 14.6-2

High Wind At-Power Cutset Report

CDF =8.5E-09/yr
Top 200 Cutsets

112	1.24E-11	7.60E-02	%T-LOPP-WRH345	WEATHER RELATED LOSS OF PREFERRED POWER DUE TO HURRICANE H3/4/5
		1.00E+00	B32-NONCONDENSE	Non condensable gasses form in ICS sufficiently to require venting
		1.00E-03	B32-SOV-FE-F010C	SOLENOID VALVE (FAILURE TO ENERGIZE)
		3.84E-02	B32-TM-LOOPA-IND	ICS LOOP A IN TEST OR MAINTENANCE BY ITSELF
		1.76E-01	B32-XHE-FO-VENT	Operator fails to open vent
		1.50E-04	E50-SQV-CC-INJ_ALL	CCF of all components in group 'E50-SQV-CC-INJ'
		1.00E+00	FL_T-LOPP050	Sequence tag for T-LOPP050
		1.61E-01	XXX-XHE-FO-LPMAKEUP	OP. FAILS TO RECOG. NEED FOR LOW PRESS. MAKEUP AFTER DEPRESSURIZATION
113	1.24E-11	7.60E-02	%T-LOPP-WRH345	WEATHER RELATED LOSS OF PREFERRED POWER DUE TO HURRICANE H3/4/5
		1.00E+00	B32-NONCONDENSE	Non condensable gasses form in ICS sufficiently to require venting
		1.00E-03	B32-SOV-FE-F010C	SOLENOID VALVE (FAILURE TO ENERGIZE)
		3.84E-02	B32-TM-LOOPB-IND	ICS LOOP B IN TEST OR MAINTENANCE BY ITSELF
		1.76E-01	B32-XHE-FO-VENT	Operator fails to open vent
		1.50E-04	E50-SQV-CC-INJ_ALL	CCF of all components in group 'E50-SQV-CC-INJ'
		1.00E+00	FL_T-LOPP050	Sequence tag for T-LOPP050
		1.61E-01	XXX-XHE-FO-LPMAKEUP	OP. FAILS TO RECOG. NEED FOR LOW PRESS. MAKEUP AFTER DEPRESSURIZATION

Table 14.6-2

High Wind At-Power Cutset Report

CDF =8.5E-09/yr
Top 200 Cutsets

114	1.24E-11	7.60E-02	%T-LOPP-WRH345	WEATHER RELATED LOSS OF PREFERRED POWER DUE TO HURRICANE H3/4/5
		1.00E+00	B32-NONCONDENSE	Non condensable gasses form in ICS sufficiently to require venting
		1.00E-03	B32-SOV-FE-F010C	SOLENOID VALVE (FAILURE TO ENERGIZE)
		3.84E-02	B32-TM-LOOPD-IND	ICS LOOP D IN TEST OR MAINTENANCE BY ITSELF
		1.76E-01	B32-XHE-FO-VENT	Operator fails to open vent
		1.50E-04	E50-SQV-CC-INJ_ALL	CCF of all components in group 'E50-SQV-CC-INJ'
		1.00E+00	FL_T-LOPP050	Sequence tag for T-LOPP050
		1.61E-01	XXX-XHE-FO-LPMAKEUP	OP. FAILS TO RECOG. NEED FOR LOW PRESS. MAKEUP AFTER DEPRESSURIZATION
115	1.24E-11	7.60E-02	%T-LOPP-WRH345	WEATHER RELATED LOSS OF PREFERRED POWER DUE TO HURRICANE H3/4/5
		1.00E+00	B32-NONCONDENSE	Non condensable gasses form in ICS sufficiently to require venting
		1.00E-03	B32-SOV-FE-F010D	SOLENOID VALVE (FAILURE TO ENERGIZE)
		3.84E-02	B32-TM-LOOPA-IND	ICS LOOP A IN TEST OR MAINTENANCE BY ITSELF
		1.76E-01	B32-XHE-FO-VENT	Operator fails to open vent
		1.50E-04	E50-SQV-CC-INJ_ALL	CCF of all components in group 'E50-SQV-CC-INJ'
		1.00E+00	FL_T-LOPP050	Sequence tag for T-LOPP050
		1.61E-01	XXX-XHE-FO-LPMAKEUP	OP. FAILS TO RECOG. NEED FOR LOW PRESS. MAKEUP AFTER DEPRESSURIZATION

Table 14.6-2

High Wind At-Power Cutset Report

CDF =8.5E-09/yr
Top 200 Cutsets

116	1.24E-11	7.60E-02	%T-LOPP-WRH345	WEATHER RELATED LOSS OF PREFERRED POWER DUE TO HURRICANE H3/4/5
		1.00E+00	B32-NONCONDENSE	Non condensable gasses form in ICS sufficiently to require venting
		1.00E-03	B32-SOV-FE-F010D	SOLENOID VALVE (FAILURE TO ENERGIZE)
		3.84E-02	B32-TM-LOOPB-IND	ICS LOOP B IN TEST OR MAINTENANCE BY ITSELF
		1.76E-01	B32-XHE-FO-VENT	Operator fails to open vent
		1.50E-04	E50-SQV-CC-INJ_ALL	CCF of all components in group 'E50-SQV-CC-INJ'
		1.00E+00	FL_T-LOPP050	Sequence tag for T-LOPP050
		1.61E-01	XXX-XHE-FO-LPMAKEUP	OP. FAILS TO RECOG. NEED FOR LOW PRESS. MAKEUP AFTER DEPRESSURIZATION
117	1.24E-11	7.60E-02	%T-LOPP-WRH345	WEATHER RELATED LOSS OF PREFERRED POWER DUE TO HURRICANE H3/4/5
		1.00E+00	B32-NONCONDENSE	Non condensable gasses form in ICS sufficiently to require venting
		1.00E-03	B32-SOV-FE-F010D	SOLENOID VALVE (FAILURE TO ENERGIZE)
		3.84E-02	B32-TM-LOOPC-IND	ICS LOOP C IN TEST OR MAINTENANCE BY ITSELF
		1.76E-01	B32-XHE-FO-VENT	Operator fails to open vent
		1.50E-04	E50-SQV-CC-INJ_ALL	CCF of all components in group 'E50-SQV-CC-INJ'
		1.00E+00	FL_T-LOPP050	Sequence tag for T-LOPP050
		1.61E-01	XXX-XHE-FO-LPMAKEUP	OP. FAILS TO RECOG. NEED FOR LOW PRESS. MAKEUP AFTER DEPRESSURIZATION

Table 14.6-2

High Wind At-Power Cutset Report

CDF =8.5E-09/yr
Top 200 Cutsets

118	1.08E-11	7.60E-02	%T-LOPP-WRH345	WEATHER RELATED LOSS OF PREFERRED POWER DUE TO HURRICANE H3/4/5
		3.33E-04	B32-SQV-CC-XCONN_1_2	CCF of two components: B32-SQV-CC-F104A & B32-SQV-CC-F104B
		1.00E-03	B32-UV_-OO-F105A	CHECK VALVE FAILS TO CLOSE
		1.00E+00	FL_T-LOPP003A	Sequence tag for T-LOPP003A
		1.61E-02	U43-XHE-FO-MAKEUP	OPERATOR FAILS TO ACTUATE U43 IN MAKE UP MODE
		2.66E-02	U43-XHE-FO-PMPTRK	OPERATOR FAIL TO SUPPLY WATER FROM PUMP TRUCKS
		1.00E+00	XHOS72H	HOUSE EVENT: 72 HOURS (VALUE =1)
119	1.08E-11	7.60E-02	%T-LOPP-WRH345	WEATHER RELATED LOSS OF PREFERRED POWER DUE TO HURRICANE H3/4/5
		3.33E-04	B32-SQV-CC-XCONN_1_2	CCF of two components: B32-SQV-CC-F104A & B32-SQV-CC-F104B
		1.00E-03	B32-UV_-OO-F105B	CHECK VALVE FAILS TO CLOSE
		1.00E+00	FL_T-LOPP003A	Sequence tag for T-LOPP003A
		1.61E-02	U43-XHE-FO-MAKEUP	OPERATOR FAILS TO ACTUATE U43 IN MAKE UP MODE
		2.66E-02	U43-XHE-FO-PMPTRK	OPERATOR FAIL TO SUPPLY WATER FROM PUMP TRUCKS
		1.00E+00	XHOS72H	HOUSE EVENT: 72 HOURS (VALUE =1)

Table 14.6-2

High Wind At-Power Cutset Report

CDF =8.5E-09/yr
Top 200 Cutsets

120	9.80E-12	7.60E-02	%T-LOPP-WRH345	WEATHER RELATED LOSS OF PREFERRED POWER DUE TO HURRICANE H3/4/5
		3.00E-03	B32-SQV-CC-F104A	F104A FAILS TO OPEN
		2.67E-05	B32-UV_-OO-XCONN-ACC_1_2	CCF of two components: B32-UV_-OO-F105A & B32-UV_-OO-F105B
		1.00E+00	FL_T-LOPP003A	Sequence tag for T-LOPP003A
		1.00E+00	XHOS72H	HOUSE EVENT: 72 HOURS (VALUE =1)
		1.61E-03	XXX-XHE-FO-ICPCCS	Operator fails to recognize the need to makeup ICS/PCCS Pool level.
121	9.80E-12	7.60E-02	%T-LOPP-WRH345	WEATHER RELATED LOSS OF PREFERRED POWER DUE TO HURRICANE H3/4/5
		3.00E-03	B32-SQV-CC-F104B	F104B FAILS TO OPEN
		2.67E-05	B32-UV_-OO-XCONN-ACC_1_2	CCF of two components: B32-UV_-OO-F105A & B32-UV_-OO-F105B
		1.00E+00	FL_T-LOPP003A	Sequence tag for T-LOPP003A
		1.00E+00	XHOS72H	HOUSE EVENT: 72 HOURS (VALUE =1)
		1.61E-03	XXX-XHE-FO-ICPCCS	Operator fails to recognize the need to makeup ICS/PCCS Pool level.
122	9.76E-12	7.60E-02	%T-LOPP-WRH345	WEATHER RELATED LOSS OF PREFERRED POWER DUE TO HURRICANE H3/4/5
		1.00E-04	B32-NPO-CC-F105A	F105A Fails to Open
		3.00E-03	B32-SQV-CC-F104A	F104A FAILS TO OPEN
		1.00E+00	FL_T-LOPP003A	Sequence tag for T-LOPP003A
		1.61E-02	U43-XHE-FO-MAKEUP	OPERATOR FAILS TO ACTUATE U43 IN MAKE UP MODE
		2.66E-02	U43-XHE-FO-PMPTRK	OPERATOR FAIL TO SUPPLY WATER FROM PUMP TRUCKS
		1.00E+00	XHOS72H	HOUSE EVENT: 72 HOURS (VALUE =1)

Table 14.6-2

High Wind At-Power Cutset Report

CDF =8.5E-09/yr
Top 200 Cutsets

123	9.76E-12	7.60E-02	%T-LOPP-WRH345	WEATHER RELATED LOSS OF PREFERRED POWER DUE TO HURRICANE H3/4/5
		1.00E-04	B32-NPO-CC-F105B	F105B fails to open
		3.00E-03	B32-SQV-CC-F104B	F104B FAILS TO OPEN
		1.00E+00	FL_T-LOPP003A	Sequence tag for T-LOPP003A
		1.61E-02	U43-XHE-FO-MAKEUP	OPERATOR FAILS TO ACTUATE U43 IN MAKE UP MODE
		2.66E-02	U43-XHE-FO-PMPTRK	OPERATOR FAIL TO SUPPLY WATER FROM PUMP TRUCKS
		1.00E+00	XHOS72H	HOUSE EVENT: 72 HOURS (VALUE =1)
124	9.69E-12	7.60E-02	%T-LOPP-WRH345	WEATHER RELATED LOSS OF PREFERRED POWER DUE TO HURRICANE H3/4/5
		1.50E-04	B21-SQV-CC_ALL	CCF of all components in group 'B21-SQV-CC'
		1.00E+00	B32-NONCONDENSE	Non condensable gasses form in ICS sufficiently to require venting
		1.76E-01	B32-XHE-FO-VENT	Operator fails to open vent
		3.00E-05	C63-DTM-FC-ESFLG_ALL	CCF of all components in group 'C63-DTM-FC-ESFLG'
		1.00E+00	FL_T-LOPP061	Sequence tag for T-LOPP061
		1.61E-01	XXX-XHE-FO-DEPRESS	OPERATOR FAILS TO RECOGNIZE NEED OF DEPRESSURIZATION

Table 14.6-2

High Wind At-Power Cutset Report

CDF =8.5E-09/yr
Top 200 Cutsets

125	9.69E-12	7.60E-02	%T-LOPP-WRH345	WEATHER RELATED LOSS OF PREFERRED POWER DUE TO HURRICANE H3/4/5
		1.00E+00	B32-NONCONDENSE	Non condensable gasses form in ICS sufficiently to require venting
		1.76E-01	B32-XHE-FO-VENT	Operator fails to open vent
		3.00E-05	C63-DTM-FC-ESFLG_ALL	CCF of all components in group 'C63-DTM-FC-ESFLG'
		1.50E-04	E50-SQV-CC-INJ_ALL	CCF of all components in group 'E50-SQV-CC-INJ'
		1.00E+00	FL_T-LOPP050	Sequence tag for T-LOPP050
		1.61E-01	XXX-XHE-FO-LPMAKEUP	OP. FAILS TO RECOG. NEED FOR LOW PRESS. MAKEUP AFTER DEPRESSURIZATION
126	9.04E-12	5.02E-07	%T-LOPP-WRT5	WEATHER RELATED LOSS OF PREFERRED POWER DUE TO CATEGORY F5
		1.80E-05	C63-LOG-FC-ESFLG_ALL	CCF of all components in group 'C63-LOG-FC-ESFLG'
		1.00E+00	FL_T-LOPP061	Sequence tag for T-LOPP061
127	8.84E-12	4.42E-06	%T-LOPP-WRT4	WEATHER RELATED LOSS OF PREFERRED POWER DUE TO CATEGORY F4
		1.00E+00	B32-NONCONDENSE	Non condensable gasses form in ICS sufficiently to require venting
		1.76E-01	B32-XHE-FO-VENT	Operator fails to open vent
		1.00E+00	FL_T-LOPP061	Sequence tag for T-LOPP061
		1.14E-05	R13-INV-FC-CCFSR_ALL	CCF of all components in group 'R13-INV-FC-CCFSR'

Table 14.6-2

High Wind At-Power Cutset Report

CDF =8.5E-09/yr
Top 200 Cutsets

128	8.81E-12	7.60E-02	%T-LOPP-WRH345	WEATHER RELATED LOSS OF PREFERRED POWER DUE TO HURRICANE H3/4/5
		3.00E-03	B32-SQV-CC-F104A	F104A FAILS TO OPEN
		2.40E-05	B32-UV_-RL-F105A	CHECK VALVE REVERSE LEAKAGE
		1.00E+00	FL_T-LOPP003A	Sequence tag for T-LOPP003A
		1.00E+00	XHOS72H	HOUSE EVENT: 72 HOURS (VALUE =1)
		1.61E-03	XXX-XHE-FO-ICPCCS	Operator fails to recognize the need to makeup ICS/PCCS Pool level.
129	8.81E-12	7.60E-02	%T-LOPP-WRH345	WEATHER RELATED LOSS OF PREFERRED POWER DUE TO HURRICANE H3/4/5
		3.00E-03	B32-SQV-CC-F104B	F104B FAILS TO OPEN
		2.40E-05	B32-UV_-RL-F105B	CHECK VALVE REVERSE LEAKAGE
		1.00E+00	FL_T-LOPP003A	Sequence tag for T-LOPP003A
		1.00E+00	XHOS72H	HOUSE EVENT: 72 HOURS (VALUE =1)
		1.61E-03	XXX-XHE-FO-ICPCCS	Operator fails to recognize the need to makeup ICS/PCCS Pool level.
130	8.45E-12	7.60E-02	%T-LOPP-WRH345	WEATHER RELATED LOSS OF PREFERRED POWER DUE TO HURRICANE H3/4/5
		1.11E-06	C63-DTM-FC-ESFLG_1_2_3	CCF of three components: C63-DTM-FC-ESFD1 & C63-DTM-FC-ESFD2 & C63-DTM-FC-ESFD3
		1.00E-04	C72-CCFSOFTWARE	COMMON CAUSE FAILURE OF DPS PROCESSORS
		1.00E+00	FL_T-LOPP061	Sequence tag for T-LOPP061

Table 14.6-2

High Wind At-Power Cutset Report

CDF =8.5E-09/yr
Top 200 Cutsets

131	8.45E-12	7.60E-02	%T-LOPP-WRH345	WEATHER RELATED LOSS OF PREFERRED POWER DUE TO HURRICANE H3/4/5
		1.11E-06	C63-DTM-FC-ESFLG_1_2_4	CCF of three components: C63-DTM-FC-ESFD1 & C63-DTM-FC-ESFD2 & C63-DTM-FC-ESFD4
		1.00E-04	C72-CCFSOFTWARE	COMMON CAUSE FAILURE OF DPS PROCESSORS
		1.00E+00	FL_T-LOPP061	Sequence tag for T-LOPP061
132	8.45E-12	7.60E-02	%T-LOPP-WRH345	WEATHER RELATED LOSS OF PREFERRED POWER DUE TO HURRICANE H3/4/5
		1.11E-06	C63-DTM-FC-ESFLG_1_3_4	CCF of three components: C63-DTM-FC-ESFD1 & C63-DTM-FC-ESFD3 & C63-DTM-FC-ESFD4
		1.00E-04	C72-CCFSOFTWARE	COMMON CAUSE FAILURE OF DPS PROCESSORS
		1.00E+00	FL_T-LOPP061	Sequence tag for T-LOPP061
133	8.45E-12	7.60E-02	%T-LOPP-WRH345	WEATHER RELATED LOSS OF PREFERRED POWER DUE TO HURRICANE H3/4/5
		1.11E-06	C63-DTM-FC-ESFLG_2_3_4	CCF of three components: C63-DTM-FC-ESFD2 & C63-DTM-FC-ESFD3 & C63-DTM-FC-ESFD4
		1.00E-04	C72-CCFSOFTWARE	COMMON CAUSE FAILURE OF DPS PROCESSORS
		1.00E+00	FL_T-LOPP061	Sequence tag for T-LOPP061
134	8.22E-12	4.42E-06	%T-LOPP-WRT4	WEATHER RELATED LOSS OF PREFERRED POWER DUE TO CATEGORY F4
		1.86E-06	C63-LDD-FC-ESFLOADS	CCF OF ALL ESF LOAD DRIVERS
		1.00E+00	FL_T-LOPP061	Sequence tag for T-LOPP061

Table 14.6-2

High Wind At-Power Cutset Report

CDF =8.5E-09/yr
Top 200 Cutsets

135	7.96E-12	4.42E-06	%T-LOPP-WRT4	WEATHER RELATED LOSS OF PREFERRED POWER DUE TO CATEGORY F4
		1.80E-05	C71-OLU-FC-R_ALL	CCF of all components in group 'C71-OLU-FC-R'
		1.00E-01	C71-XHE-FO-SCRAM	OPERATOR FAILS TO PERFORM MANUAL SCRAM
		1.00E+00	FL_AT-T-LOPP016	Sequence tag for AT-T-LOPP016
136	7.07E-12	7.60E-02	%T-LOPP-WRH345	WEATHER RELATED LOSS OF PREFERRED POWER DUE TO HURRICANE H3/4/5
		2.50E-07	C12-ROD-CF-SCRAM	CCF OF CONTROL RODS TO INSERT
		3.72E-04	C41-ACV-OC-F002A	AIR OPERATED VALVE F002A FAILS TO REMAIN OPEN
		1.00E+00	FL_AT-T-LOPP015	Sequence tag for AT-T-LOPP015
137	7.07E-12	7.60E-02	%T-LOPP-WRH345	WEATHER RELATED LOSS OF PREFERRED POWER DUE TO HURRICANE H3/4/5
		2.50E-07	C12-ROD-CF-SCRAM	CCF OF CONTROL RODS TO INSERT
		3.72E-04	C41-ACV-OC-F002B	AIR OPERATED VALVE F002B FAILS TO REMAIN OPEN
		1.00E+00	FL_AT-T-LOPP015	Sequence tag for AT-T-LOPP015
138	7.07E-12	7.60E-02	%T-LOPP-WRH345	WEATHER RELATED LOSS OF PREFERRED POWER DUE TO HURRICANE H3/4/5
		2.50E-07	C12-ROD-CF-SCRAM	CCF OF CONTROL RODS TO INSERT
		3.72E-04	C41-ACV-OC-F002C	AIR OPERATED VALVE F002C FAILS TO REMAIN OPEN
		1.00E+00	FL_AT-T-LOPP015	Sequence tag for AT-T-LOPP015

Table 14.6-2

High Wind At-Power Cutset Report

CDF =8.5E-09/yr
Top 200 Cutsets

139	7.07E-12	7.60E-02	%T-LOPP-WRH345	WEATHER RELATED LOSS OF PREFERRED POWER DUE TO HURRICANE H3/4/5
		2.50E-07	C12-ROD-CF-SCRAM	CCF OF CONTROL RODS TO INSERT
		3.72E-04	C41-ACV-OC-F002D	AIR OPERATED VALVE F002D FAILS TO REMAIN OPEN
		1.00E+00	FL_AT-T-LOPP015	Sequence tag for AT-T-LOPP015
140	6.19E-12	7.60E-02	%T-LOPP-WRH345	WEATHER RELATED LOSS OF PREFERRED POWER DUE TO HURRICANE H3/4/5
		1.00E-04	C63-CCFSOFTWARE	Common cause failure of software
		1.00E+00	FL_T-LOPP061	Sequence tag for T-LOPP061
		8.14E-07	R16-BT_-LP-CCFNSR_ALL	CCF of all components in group 'R16-BT_-LP-CCFNSR'
141	5.02E-12	5.02E-07	%T-LOPP-WRT5	WEATHER RELATED LOSS OF PREFERRED POWER DUE TO CATEGORY F5
		1.00E-04	C71-CCFSOFTWARE	RPS COMMON CAUSE SOFTWARE FAILURE
		1.00E-01	C71-XHE-FO-SCRAM	OPERATOR FAILS TO PERFORM MANUAL SCRAM
		1.00E+00	FL_AT-T-LOPP016	Sequence tag for AT-T-LOPP016
142	4.99E-12	7.60E-02	%T-LOPP-WRH345	WEATHER RELATED LOSS OF PREFERRED POWER DUE TO HURRICANE H3/4/5
		2.50E-07	C12-ROD-CF-SCRAM	CCF OF CONTROL RODS TO INSERT
		2.63E-04	C41-BV_-OC-F001A	MAINTENANCE VALVE F001A PLUGS/TRANSFERS CLOSED
		1.00E+00	FL_AT-T-LOPP015	Sequence tag for AT-T-LOPP015

Table 14.6-2

High Wind At-Power Cutset Report

CDF =8.5E-09/yr
Top 200 Cutsets

143	4.99E-12	7.60E-02	%T-LOPP-WRH345	WEATHER RELATED LOSS OF PREFERRED POWER DUE TO HURRICANE H3/4/5
		2.50E-07	C12-ROD-CF-SCRAM	CCF OF CONTROL RODS TO INSERT
		2.63E-04	C41-BV_-OC-F001B	MAINTENANCE VALVE F001B PLUGS/TRANSFERS CLOSED
		1.00E+00	FL_AT-T-LOPP015	Sequence tag for AT-T-LOPP015
144	4.99E-12	7.60E-02	%T-LOPP-WRH345	WEATHER RELATED LOSS OF PREFERRED POWER DUE TO HURRICANE H3/4/5
		2.50E-07	C12-ROD-CF-SCRAM	CCF OF CONTROL RODS TO INSERT
		2.63E-04	C41-BV_-OC-F006A	MAINTENANCE VALVE F006A PLUGS/TRANSFERS CLOSED
		1.00E+00	FL_AT-T-LOPP015	Sequence tag for AT-T-LOPP015
145	4.99E-12	7.60E-02	%T-LOPP-WRH345	WEATHER RELATED LOSS OF PREFERRED POWER DUE TO HURRICANE H3/4/5
		2.50E-07	C12-ROD-CF-SCRAM	CCF OF CONTROL RODS TO INSERT
		2.63E-04	C41-BV_-OC-F006B	MAINTENANCE VALVE F006B PLUGS/TRANSFERS CLOSED
		1.00E+00	FL_AT-T-LOPP015	Sequence tag for AT-T-LOPP015
146	4.91E-12	4.42E-06	%T-LOPP-WRT4	WEATHER RELATED LOSS OF PREFERRED POWER DUE TO CATEGORY F4
		1.11E-06	C63-DTM-FC-ESFLG_1_2_3	CCF of three components: C63-DTM-FC-ESFD1 & C63-DTM-FC-ESFD2 & C63-DTM-FC-ESFD3
		1.00E+00	FL_T-LOPP061	Sequence tag for T-LOPP061
147	4.91E-12	4.42E-06	%T-LOPP-WRT4	WEATHER RELATED LOSS OF PREFERRED POWER DUE TO CATEGORY F4
		1.11E-06	C63-DTM-FC-ESFLG_1_2_4	CCF of three components: C63-DTM-FC-ESFD1 & C63-DTM-FC-ESFD2 & C63-DTM-FC-ESFD4
		1.00E+00	FL_T-LOPP061	Sequence tag for T-LOPP061

Table 14.6-2

High Wind At-Power Cutset Report

CDF =8.5E-09/yr
Top 200 Cutsets

148	4.91E-12	4.42E-06	%T-LOPP-WRT4	WEATHER RELATED LOSS OF PREFERRED POWER DUE TO CATEGORY F4
		1.11E-06	C63-DTM-FC-ESFLG_1_3_4	CCF of three components: C63-DTM-FC-ESFD1 & C63-DTM-FC-ESFD3 & C63-DTM-FC-ESFD4
		1.00E+00	FL_T-LOPP061	Sequence tag for T-LOPP061
149	4.91E-12	4.42E-06	%T-LOPP-WRT4	WEATHER RELATED LOSS OF PREFERRED POWER DUE TO CATEGORY F4
		1.11E-06	C63-DTM-FC-ESFLG_2_3_4	CCF of three components: C63-DTM-FC-ESFD2 & C63-DTM-FC-ESFD3 & C63-DTM-FC-ESFD4
		1.00E+00	FL_T-LOPP061	Sequence tag for T-LOPP061
150	4.56E-12	7.60E-02	%T-LOPP-WRH345	WEATHER RELATED LOSS OF PREFERRED POWER DUE TO HURRICANE H3/4/5
		3.00E-05	C63-DTM-FC-ESFLG_ALL	CCF of all components in group 'C63-DTM-FC-ESFLG'
		2.00E-06	C72-LOG-FC-D_1_2_3	CCF of three components: C72-LOG-FC-D1DPS & C72-LOG-FC-D2DPS & C72-LOG-FC-D3DPS
		1.00E+00	FL_T-LOPP061	Sequence tag for T-LOPP061
151	4.56E-12	7.60E-02	%T-LOPP-WRH345	WEATHER RELATED LOSS OF PREFERRED POWER DUE TO HURRICANE H3/4/5
		6.00E-03	B21-SRV-OO-F006A	SAFETY/RELIEF VALVE F006A FAILS TO RE-CLOSE
		1.00E-04	C63-CCFSOFTWARE	Common cause failure of software
		1.00E-04	C72-CCFSOFTWARE	COMMON CAUSE FAILURE OF DPS PROCESSORS
		1.00E+00	FL_T-IORV065	Sequence tag for T-IORV065

Table 14.6-2

High Wind At-Power Cutset Report

CDF =8.5E-09/yr
Top 200 Cutsets

152	4.56E-12	7.60E-02	%T-LOPP-WRH345	WEATHER RELATED LOSS OF PREFERRED POWER DUE TO HURRICANE H3/4/5
		6.00E-03	B21-SRV-OO-F006B	SAFETY/RELIEF VALVE F006B FAILS TO RE-CLOSE
		1.00E-04	C63-CCFSOFTWARE	Common cause failure of software
		1.00E-04	C72-CCFSOFTWARE	COMMON CAUSE FAILURE OF DPS PROCESSORS
		1.00E+00	FL_T-IORV065	Sequence tag for T-IORV065
153	4.56E-12	7.60E-02	%T-LOPP-WRH345	WEATHER RELATED LOSS OF PREFERRED POWER DUE TO HURRICANE H3/4/5
		6.00E-03	B21-SRV-OO-F006C	SAFETY/RELIEF VALVE F006C FAILS TO RE-CLOSE
		1.00E-04	C63-CCFSOFTWARE	Common cause failure of software
		1.00E-04	C72-CCFSOFTWARE	COMMON CAUSE FAILURE OF DPS PROCESSORS
		1.00E+00	FL_T-IORV065	Sequence tag for T-IORV065
154	4.56E-12	7.60E-02	%T-LOPP-WRH345	WEATHER RELATED LOSS OF PREFERRED POWER DUE TO HURRICANE H3/4/5
		6.00E-03	B21-SRV-OO-F006D	SAFETY/RELIEF VALVE F006D FAILS TO RE-CLOSE
		1.00E-04	C63-CCFSOFTWARE	Common cause failure of software
		1.00E-04	C72-CCFSOFTWARE	COMMON CAUSE FAILURE OF DPS PROCESSORS
		1.00E+00	FL_T-IORV065	Sequence tag for T-IORV065

Table 14.6-2

High Wind At-Power Cutset Report

CDF =8.5E-09/yr
Top 200 Cutsets

155	4.56E-12	7.60E-02	%T-LOPP-WRH345	WEATHER RELATED LOSS OF PREFERRED POWER DUE TO HURRICANE H3/4/5
		6.00E-03	B21-SRV-OO-F006E	SAFETY/RELIEF VALVE F006E FAILS TO RE-CLOSE
		1.00E-04	C63-CCFSOFTWARE	Common cause failure of software
		1.00E-04	C72-CCFSOFTWARE	COMMON CAUSE FAILURE OF DPS PROCESSORS
		1.00E+00	FL_T-IORV065	Sequence tag for T-IORV065
156	4.56E-12	7.60E-02	%T-LOPP-WRH345	WEATHER RELATED LOSS OF PREFERRED POWER DUE TO HURRICANE H3/4/5
		6.00E-03	B21-SRV-OO-F006F	SAFETY/RELIEF VALVE F006F FAILS TO RE-CLOSE
		1.00E-04	C63-CCFSOFTWARE	Common cause failure of software
		1.00E-04	C72-CCFSOFTWARE	COMMON CAUSE FAILURE OF DPS PROCESSORS
		1.00E+00	FL_T-IORV065	Sequence tag for T-IORV065
157	4.56E-12	7.60E-02	%T-LOPP-WRH345	WEATHER RELATED LOSS OF PREFERRED POWER DUE TO HURRICANE H3/4/5
		6.00E-03	B21-SRV-OO-F006G	SAFETY/RELIEF VALVE F006G FAILS TO RE-CLOSE
		1.00E-04	C63-CCFSOFTWARE	Common cause failure of software
		1.00E-04	C72-CCFSOFTWARE	COMMON CAUSE FAILURE OF DPS PROCESSORS
		1.00E+00	FL_T-IORV065	Sequence tag for T-IORV065

Table 14.6-2

High Wind At-Power Cutset Report

CDF =8.5E-09/yr
Top 200 Cutsets

158	4.56E-12	7.60E-02	%T-LOPP-WRH345	WEATHER RELATED LOSS OF PREFERRED POWER DUE TO HURRICANE H3/4/5
		6.00E-03	B21-SRV-OO-F006H	SAFETY/RELIEF VALVE F006H FAILS TO RE-CLOSE
		1.00E-04	C63-CCFSOFTWARE	Common cause failure of software
		1.00E-04	C72-CCFSOFTWARE	COMMON CAUSE FAILURE OF DPS PROCESSORS
		1.00E+00	FL_T-IORV065	Sequence tag for T-IORV065
159	4.56E-12	7.60E-02	%T-LOPP-WRH345	WEATHER RELATED LOSS OF PREFERRED POWER DUE TO HURRICANE H3/4/5
		6.00E-03	B21-SRV-OO-F006J	SAFETY/RELIEF VALVE F006J FAILS TO RE-CLOSE
		1.00E-04	C63-CCFSOFTWARE	Common cause failure of software
		1.00E-04	C72-CCFSOFTWARE	COMMON CAUSE FAILURE OF DPS PROCESSORS
		1.00E+00	FL_T-IORV065	Sequence tag for T-IORV065
160	4.56E-12	7.60E-02	%T-LOPP-WRH345	WEATHER RELATED LOSS OF PREFERRED POWER DUE TO HURRICANE H3/4/5
		6.00E-03	B21-SRV-OO-F006K	SAFETY/RELIEF VALVE F006K FAILS TO RE-CLOSE
		1.00E-04	C63-CCFSOFTWARE	Common cause failure of software
		1.00E-04	C72-CCFSOFTWARE	COMMON CAUSE FAILURE OF DPS PROCESSORS
		1.00E+00	FL_T-IORV065	Sequence tag for T-IORV065

Table 14.6-2

High Wind At-Power Cutset Report

CDF =8.5E-09/yr
Top 200 Cutsets

161	4.40E-12	7.60E-02	%T-LOPP-WRH345	WEATHER RELATED LOSS OF PREFERRED POWER DUE TO HURRICANE H3/4/5
		3.60E-06	C62-LT_-NO-NDCRX_ALL	CCF of all components in group 'C62-LT_-NO-NDCRX'
		1.00E-04	C63-CCFSOFTWARE	Common cause failure of software
		1.00E+00	FL_T-LOPP061	Sequence tag for T-LOPP061
		1.61E-01	XXX-XHE-FO-DEPRESS	OPERATOR FAILS TO RECOGNIZE NEED OF DEPRESSURIZATION
162	4.24E-12	7.60E-02	%T-LOPP-WRH345	WEATHER RELATED LOSS OF PREFERRED POWER DUE TO HURRICANE H3/4/5
		3.00E-05	C63-DTM-FC-ESFLG_ALL	CCF of all components in group 'C63-DTM-FC-ESFLG'
		1.86E-06	C72-LDD-FC-LOADS	COMMON CAUSE FAILURE OF DPS LOAD DRIVERS
		1.00E+00	FL_T-LOPP061	Sequence tag for T-LOPP061
163	4.22E-12	7.60E-02	%T-LOPP-WRH345	WEATHER RELATED LOSS OF PREFERRED POWER DUE TO HURRICANE H3/4/5
		1.00E+00	B32-NONCONDENSE	Non condensable gasses form in ICS sufficiently to require venting
		1.00E-04	C63-CCFSOFTWARE	Common cause failure of software
		1.00E+00	FL_T-LOPP052	Sequence tag for T-LOPP052
		5.56E-07	T10-VB_-CC_1_2_3	CCF of three components: T10-VB_-CC-VB1 & T10-VB_-CC-VB2 & T10-VB_-CC-VB3
164	4.22E-12	7.60E-02	%T-LOPP-WRH345	WEATHER RELATED LOSS OF PREFERRED POWER DUE TO HURRICANE H3/4/5
		1.00E-04	C63-CCFSOFTWARE_S	ESF SPURIOUS COMMON CAUSE SOFTWARE FAILURE
		1.00E+00	FL_T-LOPP052	Sequence tag for T-LOPP052

Table 14.6-2

High Wind At-Power Cutset Report

CDF =8.5E-09/yr
Top 200 Cutsets

		5.56E-07	T10-VB_-CC_1_2_3	CCF of three components: T10-VB_-CC-VB1 & T10-VB_-CC-VB2 & T10-VB_-CC-VB3
165	4.08E-12	7.60E-02	%T-LOPP-WRH345	WEATHER RELATED LOSS OF PREFERRED POWER DUE TO HURRICANE H3/4/5
		1.00E-04	B32-NPO-CC-F105A	F105A Fails to Open
		3.33E-04	B32-SQV-CC-XCONN_1_2	CCF of two components: B32-SQV-CC-F104A & B32-SQV-CC-F104B
		1.00E+00	FL_T-LOPP003A	Sequence tag for T-LOPP003A
		1.00E+00	XHOS72H	HOUSE EVENT: 72 HOURS (VALUE =1)
		1.61E-03	XXX-XHE-FO-ICPCCS	Operator fails to recognize the need to makeup ICS/PCCS Pool level.
166	4.08E-12	7.60E-02	%T-LOPP-WRH345	WEATHER RELATED LOSS OF PREFERRED POWER DUE TO HURRICANE H3/4/5
		1.00E-04	B32-NPO-CC-F105B	F105B fails to open
		3.33E-04	B32-SQV-CC-XCONN_1_2	CCF of two components: B32-SQV-CC-F104A & B32-SQV-CC-F104B
		1.00E+00	FL_T-LOPP003A	Sequence tag for T-LOPP003A
		1.00E+00	XHOS72H	HOUSE EVENT: 72 HOURS (VALUE =1)
		1.61E-03	XXX-XHE-FO-ICPCCS	Operator fails to recognize the need to makeup ICS/PCCS Pool level.
167	3.86E-12	7.60E-02	%T-LOPP-WRH345	WEATHER RELATED LOSS OF PREFERRED POWER DUE TO HURRICANE H3/4/5
		3.00E-03	B32-SQV-CC-F104A	F104A FAILS TO OPEN
		1.00E-03	B32-UV_-OO-F105A	CHECK VALVE FAILS TO CLOSE
		1.00E+00	FL_T-LOPP003A	Sequence tag for T-LOPP003A
		1.69E-05	U43-UV_-CC2_ALL	CCF of all components in group 'U43-UV_-CC2'
		1.00E+00	XHOS72H	HOUSE EVENT: 72 HOURS (VALUE =1)

Table 14.6-2

High Wind At-Power Cutset Report

CDF =8.5E-09/yr
Top 200 Cutsets

168	3.86E-12	7.60E-02	%T-LOPP-WRH345	WEATHER RELATED LOSS OF PREFERRED POWER DUE TO HURRICANE H3/4/5
		3.00E-03	B32-SQV-CC-F104B	F104B FAILS TO OPEN
		1.00E-03	B32-UV_-OO-F105B	CHECK VALVE FAILS TO CLOSE
		1.00E+00	FL_T-LOPP003A	Sequence tag for T-LOPP003A
		1.69E-05	U43-UV_-CC2_ALL	CCF of all components in group 'U43-UV_-CC2'
		1.00E+00	XHOS72H	HOUSE EVENT: 72 HOURS (VALUE =1)
169	3.78E-12	7.60E-02	%T-LOPP-WRH345	WEATHER RELATED LOSS OF PREFERRED POWER DUE TO HURRICANE H3/4/5
		1.00E+00	B32-NONCONDENSE	Non condensable gasses form in ICS sufficiently to require venting
		1.80E-05	C63-LOG-FC-ESFLG_ALL	CCF of all components in group 'C63-LOG-FC-ESFLG'
		1.72E-05	E50-UV_-CC-INJ_ALL	CCF of all components in group 'E50-UV_-CC-INJ'
		1.00E+00	FL_T-LOPP050	Sequence tag for T-LOPP050
		1.61E-01	XXX-XHE-FO-LPMAKEUP	OP. FAILS TO RECOG. NEED FOR LOW PRESS. MAKEUP AFTER DEPRESSURIZATION
170	3.67E-12	7.60E-02	%T-LOPP-WRH345	WEATHER RELATED LOSS OF PREFERRED POWER DUE TO HURRICANE H3/4/5
		1.50E-04	B21-SQV-CC_ALL	CCF of all components in group 'B21-SQV-CC'
		1.00E+00	B32-NONCONDENSE	Non condensable gasses form in ICS sufficiently to require venting
		1.76E-01	B32-XHE-FO-VENT	Operator fails to open vent
		1.00E+00	FL_T-LOPP061	Sequence tag for T-LOPP061
		1.14E-05	R13-INV-FC-CCFSR_ALL	CCF of all components in group 'R13-INV-FC-CCFSR'
		1.61E-01	XXX-XHE-FO-DEPRESS	OPERATOR FAILS TO RECOGNIZE NEED OF DEPRESSURIZATION

Table 14.6-2

High Wind At-Power Cutset Report

CDF =8.5E-09/yr
Top 200 Cutsets

171	3.67E-12	7.60E-02	%T-LOPP-WRH345	WEATHER RELATED LOSS OF PREFERRED POWER DUE TO HURRICANE H3/4/5
		1.00E+00	B32-NONCONDENSE	Non condensable gasses form in ICS sufficiently to require venting
		1.76E-01	B32-XHE-FO-VENT	Operator fails to open vent
		1.50E-04	E50-SQV-CC-INJ_ALL	CCF of all components in group 'E50-SQV-CC-INJ'
		1.00E+00	FL_T-LOPP050	Sequence tag for T-LOPP050
		1.14E-05	R13-INV-FC-CCFSR_ALL	CCF of all components in group 'R13-INV-FC-CCFSR'
		1.61E-01	XXX-XHE-FO-LPMAKEUP	OP. FAILS TO RECOG. NEED FOR LOW PRESS. MAKEUP AFTER DEPRESSURIZATION
172	3.54E-12	7.60E-02	%T-LOPP-WRH345	WEATHER RELATED LOSS OF PREFERRED POWER DUE TO HURRICANE H3/4/5
		9.65E-06	B32-NPO-CC-XCONN_1_2	CCF of two components: B32-NPO-CC-F105A & B32-NPO-CC-F105B
		3.00E-03	B32-SQV-CC-F104A	F104A FAILS TO OPEN
		1.00E+00	FL_T-LOPP003A	Sequence tag for T-LOPP003A
		1.00E+00	XHOS72H	HOUSE EVENT: 72 HOURS (VALUE =1)
		1.61E-03	XXX-XHE-FO-ICPCCS	Operator fails to recognize the need to makeup ICS/PCCS Pool level.
173	3.54E-12	7.60E-02	%T-LOPP-WRH345	WEATHER RELATED LOSS OF PREFERRED POWER DUE TO HURRICANE H3/4/5
		9.65E-06	B32-NPO-CC-XCONN_1_2	CCF of two components: B32-NPO-CC-F105A & B32-NPO-CC-F105B
		3.00E-03	B32-SQV-CC-F104B	F104B FAILS TO OPEN
		1.00E+00	FL_T-LOPP003A	Sequence tag for T-LOPP003A
		1.00E+00	XHOS72H	HOUSE EVENT: 72 HOURS (VALUE =1)
		1.61E-03	XXX-XHE-FO-ICPCCS	Operator fails to recognize the need to makeup ICS/PCCS Pool level.

Table 14.6-2

High Wind At-Power Cutset Report

CDF =8.5E-09/yr
Top 200 Cutsets

174	3.46E-12	7.60E-02	%T-LOPP-WRH345	WEATHER RELATED LOSS OF PREFERRED POWER DUE TO HURRICANE H3/4/5
		1.00E-04	C63-CCFSOFTWARE	Common cause failure of software
		1.00E+00	FL_T-LOPP061	Sequence tag for T-LOPP061
		4.55E-07	R13-XFL-LP-CCFNSR2_ALL	CCF of all components in group 'R13-XFL-LP-CCFNSR2'
175	3.44E-12	7.60E-02	%T-LOPP-WRH345	WEATHER RELATED LOSS OF PREFERRED POWER DUE TO HURRICANE H3/4/5
		1.50E-04	B21-SQV-CC_ALL	CCF of all components in group 'B21-SQV-CC'
		1.37E-03	B32-TM-LOOPA-MULT	ICS LOOP A IN TEST OR MAINTENANCE, MULTIPLE LOOPS
		1.37E-03	B32-TM-LOOPB-MULT	ICS LOOP B IN TEST OR MAINTENANCE, MULTIPLE LOOPS
		1.00E+00	FL_T-LOPP061	Sequence tag for T-LOPP061
		1.61E-01	XXX-XHE-FO-DEPRESS	OPERATOR FAILS TO RECOGNIZE NEED OF DEPRESSURIZATION
176	3.44E-12	7.60E-02	%T-LOPP-WRH345	WEATHER RELATED LOSS OF PREFERRED POWER DUE TO HURRICANE H3/4/5
		1.50E-04	B21-SQV-CC_ALL	CCF of all components in group 'B21-SQV-CC'
		1.37E-03	B32-TM-LOOPA-MULT	ICS LOOP A IN TEST OR MAINTENANCE, MULTIPLE LOOPS
		1.37E-03	B32-TM-LOOPC-MULT	ICS LOOP C IN TEST OR MAINTENANCE, MULTIPLE LOOPS
		1.00E+00	FL_T-LOPP061	Sequence tag for T-LOPP061
		1.61E-01	XXX-XHE-FO-DEPRESS	OPERATOR FAILS TO RECOGNIZE NEED OF DEPRESSURIZATION

Table 14.6-2

High Wind At-Power Cutset Report

CDF =8.5E-09/yr
Top 200 Cutsets

177	3.44E-12	7.60E-02	%T-LOPP-WRH345	WEATHER RELATED LOSS OF PREFERRED POWER DUE TO HURRICANE H3/4/5
		1.50E-04	B21-SQV-CC_ALL	CCF of all components in group 'B21-SQV-CC'
		1.37E-03	B32-TM-LOOPA-MULT	ICS LOOP A IN TEST OR MAINTENANCE, MULTIPLE LOOPS
		1.37E-03	B32-TM-LOOPD-MULT	ICS LOOP D IN TEST OR MAINTENANCE, MULTIPLE LOOPS
		1.00E+00	FL_T-LOPP061	Sequence tag for T-LOPP061
		1.61E-01	XXX-XHE-FO-DEPRESS	OPERATOR FAILS TO RECOGNIZE NEED OF DEPRESSURIZATION
178	3.44E-12	7.60E-02	%T-LOPP-WRH345	WEATHER RELATED LOSS OF PREFERRED POWER DUE TO HURRICANE H3/4/5
		1.50E-04	B21-SQV-CC_ALL	CCF of all components in group 'B21-SQV-CC'
		1.37E-03	B32-TM-LOOPB-MULT	ICS LOOP B IN TEST OR MAINTENANCE, MULTIPLE LOOPS
		1.37E-03	B32-TM-LOOPC-MULT	ICS LOOP C IN TEST OR MAINTENANCE, MULTIPLE LOOPS
		1.00E+00	FL_T-LOPP061	Sequence tag for T-LOPP061
		1.61E-01	XXX-XHE-FO-DEPRESS	OPERATOR FAILS TO RECOGNIZE NEED OF DEPRESSURIZATION
179	3.44E-12	7.60E-02	%T-LOPP-WRH345	WEATHER RELATED LOSS OF PREFERRED POWER DUE TO HURRICANE H3/4/5
		1.50E-04	B21-SQV-CC_ALL	CCF of all components in group 'B21-SQV-CC'
		1.37E-03	B32-TM-LOOPB-MULT	ICS LOOP B IN TEST OR MAINTENANCE, MULTIPLE LOOPS
		1.37E-03	B32-TM-LOOPD-MULT	ICS LOOP D IN TEST OR MAINTENANCE, MULTIPLE LOOPS
		1.00E+00	FL_T-LOPP061	Sequence tag for T-LOPP061
		1.61E-01	XXX-XHE-FO-DEPRESS	OPERATOR FAILS TO RECOGNIZE NEED OF DEPRESSURIZATION
180	3.44E-12	7.60E-02	%T-LOPP-WRH345	WEATHER RELATED LOSS OF PREFERRED POWER DUE TO HURRICANE H3/4/5

Table 14.6-2

High Wind At-Power Cutset Report

CDF =8.5E-09/yr
Top 200 Cutsets

		1.50E-04	B21-SQV-CC_ALL	CCF of all components in group 'B21-SQV-CC'
		1.37E-03	B32-TM-LOOPC-MULT	ICS LOOP C IN TEST OR MAINTENANCE, MULTIPLE LOOPS
		1.37E-03	B32-TM-LOOPD-MULT	ICS LOOP D IN TEST OR MAINTENANCE, MULTIPLE LOOPS
		1.00E+00	FL_T-LOPP061	Sequence tag for T-LOPP061
		1.61E-01	XXX-XHE-FO-DEPRESS	OPERATOR FAILS TO RECOGNIZE NEED OF DEPRESSURIZATION
181	3.44E-12	7.60E-02	%T-LOPP-WRH345	WEATHER RELATED LOSS OF PREFERRED POWER DUE TO HURRICANE H3/4/5
		1.37E-03	B32-TM-LOOPA-MULT	ICS LOOP A IN TEST OR MAINTENANCE, MULTIPLE LOOPS
		1.37E-03	B32-TM-LOOPB-MULT	ICS LOOP B IN TEST OR MAINTENANCE, MULTIPLE LOOPS
		1.50E-04	E50-SQV-CC-INJ_ALL	CCF of all components in group 'E50-SQV-CC-INJ'
		1.00E+00	FL_T-LOPP050	Sequence tag for T-LOPP050
		1.61E-01	XXX-XHE-FO-LPMAKEUP	OP. FAILS TO RECOG. NEED FOR LOW PRESS. MAKEUP AFTER DEPRESSURIZATION
182	3.44E-12	7.60E-02	%T-LOPP-WRH345	WEATHER RELATED LOSS OF PREFERRED POWER DUE TO HURRICANE H3/4/5
		1.37E-03	B32-TM-LOOPA-MULT	ICS LOOP A IN TEST OR MAINTENANCE, MULTIPLE LOOPS
		1.37E-03	B32-TM-LOOPC-MULT	ICS LOOP C IN TEST OR MAINTENANCE, MULTIPLE LOOPS
		1.50E-04	E50-SQV-CC-INJ_ALL	CCF of all components in group 'E50-SQV-CC-INJ'
		1.00E+00	FL_T-LOPP050	Sequence tag for T-LOPP050
		1.61E-01	XXX-XHE-FO-LPMAKEUP	OP. FAILS TO RECOG. NEED FOR LOW PRESS. MAKEUP AFTER DEPRESSURIZATION

Table 14.6-2

High Wind At-Power Cutset Report

CDF =8.5E-09/yr
Top 200 Cutsets

183	3.44E-12	7.60E-02	%T-LOPP-WRH345	WEATHER RELATED LOSS OF PREFERRED POWER DUE TO HURRICANE H3/4/5
		1.37E-03	B32-TM-LOOPA-MULT	ICS LOOP A IN TEST OR MAINTENANCE, MULTIPLE LOOPS
		1.37E-03	B32-TM-LOOPD-MULT	ICS LOOP D IN TEST OR MAINTENANCE, MULTIPLE LOOPS
		1.50E-04	E50-SQV-CC-INJ_ALL	CCF of all components in group 'E50-SQV-CC-INJ'
		1.00E+00	FL_T-LOPP050	Sequence tag for T-LOPP050
		1.61E-01	XXX-XHE-FO-LPMAKEUP	OP. FAILS TO RECOG. NEED FOR LOW PRESS. MAKEUP AFTER DEPRESSURIZATION
184	3.44E-12	7.60E-02	%T-LOPP-WRH345	WEATHER RELATED LOSS OF PREFERRED POWER DUE TO HURRICANE H3/4/5
		1.37E-03	B32-TM-LOOPB-MULT	ICS LOOP B IN TEST OR MAINTENANCE, MULTIPLE LOOPS
		1.37E-03	B32-TM-LOOPC-MULT	ICS LOOP C IN TEST OR MAINTENANCE, MULTIPLE LOOPS
		1.50E-04	E50-SQV-CC-INJ_ALL	CCF of all components in group 'E50-SQV-CC-INJ'
		1.00E+00	FL_T-LOPP050	Sequence tag for T-LOPP050
		1.61E-01	XXX-XHE-FO-LPMAKEUP	OP. FAILS TO RECOG. NEED FOR LOW PRESS. MAKEUP AFTER DEPRESSURIZATION

Table 14.6-2

High Wind At-Power Cutset Report

CDF =8.5E-09/yr
Top 200 Cutsets

185	3.44E-12	7.60E-02	%T-LOPP-WRH345	WEATHER RELATED LOSS OF PREFERRED POWER DUE TO HURRICANE H3/4/5
		1.37E-03	B32-TM-LOOPB-MULT	ICS LOOP B IN TEST OR MAINTENANCE, MULTIPLE LOOPS
		1.37E-03	B32-TM-LOOPD-MULT	ICS LOOP D IN TEST OR MAINTENANCE, MULTIPLE LOOPS
		1.50E-04	E50-SQV-CC-INJ_ALL	CCF of all components in group 'E50-SQV-CC-INJ'
		1.00E+00	FL_T-LOPP050	Sequence tag for T-LOPP050
		1.61E-01	XXX-XHE-FO-LPMAKEUP	OP. FAILS TO RECOG. NEED FOR LOW PRESS. MAKEUP AFTER DEPRESSURIZATION
186	3.44E-12	7.60E-02	%T-LOPP-WRH345	WEATHER RELATED LOSS OF PREFERRED POWER DUE TO HURRICANE H3/4/5
		1.37E-03	B32-TM-LOOPC-MULT	ICS LOOP C IN TEST OR MAINTENANCE, MULTIPLE LOOPS
		1.37E-03	B32-TM-LOOPD-MULT	ICS LOOP D IN TEST OR MAINTENANCE, MULTIPLE LOOPS
		1.50E-04	E50-SQV-CC-INJ_ALL	CCF of all components in group 'E50-SQV-CC-INJ'
		1.00E+00	FL_T-LOPP050	Sequence tag for T-LOPP050
		1.61E-01	XXX-XHE-FO-LPMAKEUP	OP. FAILS TO RECOG. NEED FOR LOW PRESS. MAKEUP AFTER DEPRESSURIZATION
187	3.41E-12	7.60E-02	%T-LOPP-WRH345	WEATHER RELATED LOSS OF PREFERRED POWER DUE TO HURRICANE H3/4/5
		1.50E-04	B21-SQV-CC_ALL	CCF of all components in group 'B21-SQV-CC'
		1.00E+00	B32-NONCONDENSE	Non condensable gasses form in ICS sufficiently to require venting
		1.86E-06	C63-LDD-FC-ESFLOADS	CCF OF ALL ESF LOAD DRIVERS
		1.00E+00	FL_T-LOPP061	Sequence tag for T-LOPP061
		1.61E-01	XXX-XHE-FO-DEPRESS	OPERATOR FAILS TO RECOGNIZE NEED OF DEPRESSURIZATION

Table 14.6-2

High Wind At-Power Cutset Report

CDF =8.5E-09/yr
Top 200 Cutsets

188	3.41E-12	7.60E-02	%T-LOPP-WRH345	WEATHER RELATED LOSS OF PREFERRED POWER DUE TO HURRICANE H3/4/5
		1.00E+00	B32-NONCONDENSE	Non condensable gasses form in ICS sufficiently to require venting
		1.86E-06	C63-LDD-FC-ESFLOADS	CCF OF ALL ESF LOAD DRIVERS
		1.50E-04	E50-SQV-CC-INJ_ALL	CCF of all components in group 'E50-SQV-CC-INJ'
		1.00E+00	FL_T-LOPP050	Sequence tag for T-LOPP050
		1.61E-01	XXX-XHE-FO-LPMAKEUP	OP. FAILS TO RECOG. NEED FOR LOW PRESS. MAKEUP AFTER DEPRESSURIZATION
189	3.11E-12	7.60E-02	%T-LOPP-WRH345	WEATHER RELATED LOSS OF PREFERRED POWER DUE TO HURRICANE H3/4/5
		3.60E-06	C63-LT_-NO-ESFRX_ALL	CCF of all components in group 'C63-LT_-NO-ESFRX'
		1.00E+00	FL_T-LOPP061	Sequence tag for T-LOPP061
		1.14E-05	R13-INV-FC-CCFNSR_ALL	CCF of all components in group 'R13-INV-FC-CCFNSR'
190	2.85E-12	7.60E-02	%T-LOPP-WRH345	WEATHER RELATED LOSS OF PREFERRED POWER DUE TO HURRICANE H3/4/5
		2.50E-07	C12-ROD-CF-SCRAM	CCF OF CONTROL RODS TO INSERT
		1.50E-04	C41-SQV-CC_ALL	CCF of all components in group 'C41-SQV-CC'
		1.00E+00	FL_AT-T-LOPP015	Sequence tag for AT-T-LOPP015
191	2.74E-12	7.60E-02	%T-LOPP-WRH345	WEATHER RELATED LOSS OF PREFERRED POWER DUE TO HURRICANE H3/4/5
		3.60E-07	C62-PSP-FO-DPSEP_ALL	CCF of all components in group 'C62-PSP-FO-DPSEP'
		1.00E-04	C63-CCFSOFTWARE	Common cause failure of software
		1.00E+00	FL_T-LOPP061	Sequence tag for T-LOPP061

Table 14.6-2

High Wind At-Power Cutset Report

CDF =8.5E-09/yr
Top 200 Cutsets

192	2.74E-12	7.60E-02	%T-LOPP-WRH345	WEATHER RELATED LOSS OF PREFERRED POWER DUE TO HURRICANE H3/4/5
		1.80E-05	C63-LOG-FC-ESFLG_ALL	CCF of all components in group 'C63-LOG-FC-ESFLG'
		2.00E-06	C72-LOG-FC-D_1_2_3	CCF of three components: C72-LOG-FC-D1DPS & C72-LOG-FC-D2DPS & C72-LOG-FC-D3DPS
		1.00E+00	FL_T-LOPP061	Sequence tag for T-LOPP061
193	2.74E-12	7.60E-02	%T-LOPP-WRH345	WEATHER RELATED LOSS OF PREFERRED POWER DUE TO HURRICANE H3/4/5
		3.60E-06	C63-LT_-NO-ESFRX_ALL	CCF of all components in group 'C63-LT_-NO-ESFRX'
		1.00E-05	C72-LOG-FC-D_1_2	CCF of two components: C72-LOG-FC-D1DPS & C72-LOG-FC-D2DPS
		1.00E+00	FL_T-LOPP061	Sequence tag for T-LOPP061
194	2.74E-12	7.60E-02	%T-LOPP-WRH345	WEATHER RELATED LOSS OF PREFERRED POWER DUE TO HURRICANE H3/4/5
		3.60E-06	C63-LT_-NO-ESFRX_ALL	CCF of all components in group 'C63-LT_-NO-ESFRX'
		1.00E-05	C72-LOG-FC-D_1_3	CCF of two components: C72-LOG-FC-D1DPS & C72-LOG-FC-D3DPS
		1.00E+00	FL_T-LOPP061	Sequence tag for T-LOPP061
195	2.74E-12	7.60E-02	%T-LOPP-WRH345	WEATHER RELATED LOSS OF PREFERRED POWER DUE TO HURRICANE H3/4/5
		3.60E-06	C63-LT_-NO-ESFRX_ALL	CCF of all components in group 'C63-LT_-NO-ESFRX'
		1.00E-05	C72-LOG-FC-D_2_3	CCF of two components: C72-LOG-FC-D2DPS & C72-LOG-FC-D3DPS
		1.00E+00	FL_T-LOPP061	Sequence tag for T-LOPP061

Table 14.6-2

High Wind At-Power Cutset Report

CDF =8.5E-09/yr
Top 200 Cutsets

196	2.65E-12	4.42E-06	%T-LOPP-WRT4	WEATHER RELATED LOSS OF PREFERRED POWER DUE TO CATEGORY F4
		6.00E-03	B21-SRV-OO-F006A	SAFETY/RELIEF VALVE F006A FAILS TO RE-CLOSE
		1.00E-04	C63-CCFSOFTWARE	Common cause failure of software
		1.00E+00	FL_T-IORV065	Sequence tag for T-IORV065
197	2.65E-12	4.42E-06	%T-LOPP-WRT4	WEATHER RELATED LOSS OF PREFERRED POWER DUE TO CATEGORY F4
		6.00E-03	B21-SRV-OO-F006B	SAFETY/RELIEF VALVE F006B FAILS TO RE-CLOSE
		1.00E-04	C63-CCFSOFTWARE	Common cause failure of software
		1.00E+00	FL_T-IORV065	Sequence tag for T-IORV065
198	2.65E-12	4.42E-06	%T-LOPP-WRT4	WEATHER RELATED LOSS OF PREFERRED POWER DUE TO CATEGORY F4
		6.00E-03	B21-SRV-OO-F006C	SAFETY/RELIEF VALVE F006C FAILS TO RE-CLOSE
		1.00E-04	C63-CCFSOFTWARE	Common cause failure of software
		1.00E+00	FL_T-IORV065	Sequence tag for T-IORV065
199	2.65E-12	4.42E-06	%T-LOPP-WRT4	WEATHER RELATED LOSS OF PREFERRED POWER DUE TO CATEGORY F4
		6.00E-03	B21-SRV-OO-F006D	SAFETY/RELIEF VALVE F006D FAILS TO RE-CLOSE
		1.00E-04	C63-CCFSOFTWARE	Common cause failure of software
		1.00E+00	FL_T-IORV065	Sequence tag for T-IORV065
200	2.65E-12	4.42E-06	%T-LOPP-WRT4	WEATHER RELATED LOSS OF PREFERRED POWER DUE TO CATEGORY F4
		6.00E-03	B21-SRV-OO-F006E	SAFETY/RELIEF VALVE F006E FAILS TO RE-CLOSE
		1.00E-04	C63-CCFSOFTWARE	Common cause failure of software
		1.00E+00	FL_T-IORV065	Sequence tag for T-IORV065

Table 14.6-3

High Wind Shutdown Cutset Report

CDF = 3.95E-08/yr
Top 200 Cutsets

#	Cutset Prob	Event Prob	Event	Description
1	4.18E-09	8.36E-04	%M5_LOPP-H345	LOSS OF PREFERRED POWER - MODE 5 - H345
		1.00E-04	C63-CCFSOFTWARE	Common cause failure of software
		1.00E+00	FL_M5-LOPP016	Sequence tag for M5-LOPP016
		5.00E-02	MS-TOP2	TWO DPVs FAIL TO OPEN (MANUAL)
2	3.48E-09	4.64E-04	%M5O_LOPP-H345	LOSS OF PREFERRED POWER - MODE 5O - H345
		1.50E-04	B21-SQV-CC_ALL	CCF of all components in group 'B21-SQV-CC'
		1.00E+00	FL_M5O-LOPP015	Sequence tag for M5O-LOPP015
		5.00E-02	MS-TOP2	TWO DPVs FAIL TO OPEN (MANUAL)
3	2.32E-09	4.64E-04	%M5O_LOPP-H345	LOSS OF PREFERRED POWER - MODE 5O - H345
		1.00E-04	C63-CCFSOFTWARE	Common cause failure of software
		1.00E+00	FL_M5O-LOPP015	Sequence tag for M5O-LOPP015
		5.00E-02	MS-TOP2	TWO DPVs FAIL TO OPEN (MANUAL)
4	2.24E-09	4.64E-04	%M5O_LOPP-H345	LOSS OF PREFERRED POWER - MODE 5O - H345
		3.00E-04	E50-SQV-CC-EQU_ALL	CCF of all components in group 'E50-SQV-CC-EQU'
		1.00E+00	FL_M5O-LOPP009	Sequence tag for M5O-LOPP009
		1.61E-02	XXX-XHE-FO-LPMAKEUP	OP. FAILS TO RECOG. NEED FOR LOW PRESS. MAKEUP AFTER DEPRESSURIZATION

Table 14.6-3

High Wind Shutdown Cutset Report

CDF = 3.95E-08/yr
Top 200 Cutsets

5	1.96E-09	4.64E-04	%M5O_LOPP-H345	LOSS OF PREFERRED POWER - MODE 5O - H345
		2.63E-04	E50-BV_-OC-F004A	MAINTENANCE VALVE F004A PLUGS/TRANSFERS CLOSED
		1.00E+00	FL_M5O-LOPP009	Sequence tag for M5O-LOPP009
		1.61E-02	XXX-XHE-FO-LPMAKEUP	OP. FAILS TO RECOG. NEED FOR LOW PRESS. MAKEUP AFTER DEPRESSURIZATION
6	1.96E-09	4.64E-04	%M5O_LOPP-H345	LOSS OF PREFERRED POWER - MODE 5O - H345
		2.63E-04	E50-BV_-OC-F004D	MAINTENANCE VALVE F004D PLUGS/TRANSFERS CLOSED
		1.00E+00	FL_M5O-LOPP009	Sequence tag for M5O-LOPP009
		1.61E-02	XXX-XHE-FO-LPMAKEUP	OP. FAILS TO RECOG. NEED FOR LOW PRESS. MAKEUP AFTER DEPRESSURIZATION
7	1.35E-09	8.36E-04	%M5_LOPP-H345	LOSS OF PREFERRED POWER - MODE 5 - H345
		1.00E-04	C63-CCFSOFTWARE	Common cause failure of software
		1.00E+00	FL_M5-LOPP010	Sequence tag for M5-LOPP010
		1.61E-02	XXX-XHE-FO-LPMAKEUP	OP. FAILS TO RECOG. NEED FOR LOW PRESS. MAKEUP AFTER DEPRESSURIZATION
8	1.35E-09	8.36E-04	%M5_LOPP-H345	LOSS OF PREFERRED POWER - MODE 5 - H345
		1.00E-04	C63-CCFSOFTWARE	Common cause failure of software
		1.00E+00	FL_M5-LOPP011	Sequence tag for M5-LOPP011
		1.61E-02	XXX-XHE-FO-LPMAKEUP	OP. FAILS TO RECOG. NEED FOR LOW PRESS. MAKEUP AFTER DEPRESSURIZATION

Table 14.6-3

High Wind Shutdown Cutset Report

CDF = 3.95E-08/yr
Top 200 Cutsets

9	1.25E-09	8.36E-04	%M5_LOPP-H345	LOSS OF PREFERRED POWER - MODE 5 - H345
		3.00E-05	C63-DTM-FC-ESFLG_ALL	CCF of all components in group 'C63-DTM-FC-ESFLG'
		1.00E+00	FL_M5-LOPP016	Sequence tag for M5-LOPP016
		5.00E-02	MS-TOP2	TWO DPVs FAIL TO OPEN (MANUAL)
10	1.12E-09	4.64E-04	%M5O_LOPP-H345	LOSS OF PREFERRED POWER - MODE 5O - H345
		1.50E-04	B21-SQV-CC_ALL	CCF of all components in group 'B21-SQV-CC'
		1.00E+00	FL_M5O-LOPP010	Sequence tag for M5O-LOPP010
		1.61E-02	XXX-XHE-FO-LPMAKEUP	OP. FAILS TO RECOG. NEED FOR LOW PRESS. MAKEUP AFTER DEPRESSURIZATION
11	1.12E-09	4.64E-04	%M5O_LOPP-H345	LOSS OF PREFERRED POWER - MODE 5O - H345
		1.50E-04	E50-SQV-CC-INJ_ALL	CCF of all components in group 'E50-SQV-CC-INJ'
		1.00E+00	FL_M5O-LOPP009	Sequence tag for M5O-LOPP009
		1.61E-02	XXX-XHE-FO-LPMAKEUP	OP. FAILS TO RECOG. NEED FOR LOW PRESS. MAKEUP AFTER DEPRESSURIZATION
12	7.52E-10	8.36E-04	%M5_LOPP-H345	LOSS OF PREFERRED POWER - MODE 5 - H345
		1.80E-05	C63-LOG-FC-ESFLG_ALL	CCF of all components in group 'C63-LOG-FC-ESFLG'
		1.00E+00	FL_M5-LOPP016	Sequence tag for M5-LOPP016
		5.00E-02	MS-TOP2	TWO DPVs FAIL TO OPEN (MANUAL)

Table 14.6-3

High Wind Shutdown Cutset Report

CDF = 3.95E-08/yr
Top 200 Cutsets

13	7.47E-10	4.64E-04	%M5O_LOPP-H345	LOSS OF PREFERRED POWER - MODE 5O - H345
		1.00E-04	C63-CCFSOFTWARE	Common cause failure of software
		1.00E+00	FL_M5O-LOPP009	Sequence tag for M5O-LOPP009
		1.61E-02	XXX-XHE-FO-LPMAKEUP	OP. FAILS TO RECOG. NEED FOR LOW PRESS. MAKEUP AFTER DEPRESSURIZATION
14	7.47E-10	4.64E-04	%M5O_LOPP-H345	LOSS OF PREFERRED POWER - MODE 5O - H345
		1.00E-04	C63-CCFSOFTWARE	Common cause failure of software
		1.00E+00	FL_M5O-LOPP010	Sequence tag for M5O-LOPP010
		1.61E-02	XXX-XHE-FO-LPMAKEUP	OP. FAILS TO RECOG. NEED FOR LOW PRESS. MAKEUP AFTER DEPRESSURIZATION
15	6.96E-10	4.64E-04	%M5O_LOPP-H345	LOSS OF PREFERRED POWER - MODE 5O - H345
		3.00E-05	C63-DTM-FC-ESFLG_ALL	CCF of all components in group 'C63-DTM-FC-ESFLG'
		1.00E+00	FL_M5O-LOPP015	Sequence tag for M5O-LOPP015
		5.00E-02	MS-TOP2	TWO DPVs FAIL TO OPEN (MANUAL)
16	4.18E-10	4.64E-04	%M5O_LOPP-H345	LOSS OF PREFERRED POWER - MODE 5O - H345
		1.80E-05	C63-LOG-FC-ESFLG_ALL	CCF of all components in group 'C63-LOG-FC-ESFLG'
		1.00E+00	FL_M5O-LOPP015	Sequence tag for M5O-LOPP015
		5.00E-02	MS-TOP2	TWO DPVs FAIL TO OPEN (MANUAL)

Table 14.6-3

High Wind Shutdown Cutset Report

CDF = 3.95E-08/yr
Top 200 Cutsets

17	4.04E-10	8.36E-04	%M5_LOPP-H345	LOSS OF PREFERRED POWER - MODE 5 - H345
		3.00E-05	C63-DTM-FC-ESFLG_ALL	CCF of all components in group 'C63-DTM-FC-ESFLG'
		1.00E+00	FL_M5-LOPP010	Sequence tag for M5-LOPP010
		1.61E-02	XXX-XHE-FO-LPMAKEUP	OP. FAILS TO RECOG. NEED FOR LOW PRESS. MAKEUP AFTER DEPRESSURIZATION
18	4.04E-10	8.36E-04	%M5_LOPP-H345	LOSS OF PREFERRED POWER - MODE 5 - H345
		3.00E-05	C63-DTM-FC-ESFLG_ALL	CCF of all components in group 'C63-DTM-FC-ESFLG'
		1.00E+00	FL_M5-LOPP011	Sequence tag for M5-LOPP011
		1.61E-02	XXX-XHE-FO-LPMAKEUP	OP. FAILS TO RECOG. NEED FOR LOW PRESS. MAKEUP AFTER DEPRESSURIZATION
19	2.64E-10	4.64E-04	%M5O_LOPP-H345	LOSS OF PREFERRED POWER - MODE 5O - H345
		1.00E+00	FL_M5O-LOPP015	Sequence tag for M5O-LOPP015
		5.00E-02	MS-TOP2	TWO DPVs FAIL TO OPEN (MANUAL)
		1.14E-05	R13-INV-FC-CCFSR_ALL	CCF of all components in group 'R13-INV-FC-CCFSR'
20	2.42E-10	8.36E-04	%M5_LOPP-H345	LOSS OF PREFERRED POWER - MODE 5 - H345
		1.80E-05	C63-LOG-FC-ESFLG_ALL	CCF of all components in group 'C63-LOG-FC-ESFLG'
		1.00E+00	FL_M5-LOPP010	Sequence tag for M5-LOPP010
		1.61E-02	XXX-XHE-FO-LPMAKEUP	OP. FAILS TO RECOG. NEED FOR LOW PRESS. MAKEUP AFTER DEPRESSURIZATION

Table 14.6-3

High Wind Shutdown Cutset Report

CDF = 3.95E-08/yr
Top 200 Cutsets

21	2.42E-10	8.36E-04	%M5_LOPP-H345	LOSS OF PREFERRED POWER - MODE 5 - H345
		1.80E-05	C63-LOG-FC-ESFLG_ALL	CCF of all components in group 'C63-LOG-FC-ESFLG'
		1.00E+00	FL_M5-LOPP011	Sequence tag for M5-LOPP011
		1.61E-02	XXX-XHE-FO-LPMAKEUP	OP. FAILS TO RECOG. NEED FOR LOW PRESS. MAKEUP AFTER DEPRESSURIZATION
22	2.41E-10	8.36E-04	%M5_LOPP-H345	LOSS OF PREFERRED POWER - MODE 5 - H345
		1.50E-04	B21-SQV-CC_ALL	CCF of all components in group 'B21-SQV-CC'
		3.84E-02	B32-TM-LOOPA-IND	ICS LOOP A IN TEST OR MAINTENANCE BY ITSELF
		1.00E+00	FL_M5-LOPP016	Sequence tag for M5-LOPP016
		5.00E-02	MS-TOP2	TWO DPVs FAIL TO OPEN (MANUAL)
23	2.41E-10	8.36E-04	%M5_LOPP-H345	LOSS OF PREFERRED POWER - MODE 5 - H345
		1.50E-04	B21-SQV-CC_ALL	CCF of all components in group 'B21-SQV-CC'
		3.84E-02	B32-TM-LOOPB-IND	ICS LOOP B IN TEST OR MAINTENANCE BY ITSELF
		1.00E+00	FL_M5-LOPP016	Sequence tag for M5-LOPP016
		5.00E-02	MS-TOP2	TWO DPVs FAIL TO OPEN (MANUAL)
24	2.24E-10	4.64E-04	%M5O_LOPP-H345	LOSS OF PREFERRED POWER - MODE 5O - H345
		3.00E-05	C63-DTM-FC-ESFLG_ALL	CCF of all components in group 'C63-DTM-FC-ESFLG'
		1.00E+00	FL_M5O-LOPP009	Sequence tag for M5O-LOPP009
		1.61E-02	XXX-XHE-FO-LPMAKEUP	OP. FAILS TO RECOG. NEED FOR LOW PRESS. MAKEUP AFTER DEPRESSURIZATION

Table 14.6-3

High Wind Shutdown Cutset Report

CDF = 3.95E-08/yr
Top 200 Cutsets

25	2.24E-10	4.64E-04	%M5O_LOPP-H345	LOSS OF PREFERRED POWER - MODE 5O - H345
		3.00E-05	C63-DTM-FC-ESFLG_ALL	CCF of all components in group 'C63-DTM-FC-ESFLG'
		1.00E+00	FL_M5O-LOPP010	Sequence tag for M5O-LOPP010
		1.61E-02	XXX-XHE-FO-LPMAKEUP	OP. FAILS TO RECOG. NEED FOR LOW PRESS. MAKEUP AFTER DEPRESSURIZATION
26	1.78E-10	4.64E-04	%M5O_LOPP-H345	LOSS OF PREFERRED POWER - MODE 5O - H345
		2.38E-05	E50-SQV-CC-INJ_1_5	CCF of two components: E50-SQV-CC-INJ-F002A & E50-SQV-CC-INJ-F002E
		1.00E+00	FL_M5O-LOPP009	Sequence tag for M5O-LOPP009
		1.61E-02	XXX-XHE-FO-LPMAKEUP	OP. FAILS TO RECOG. NEED FOR LOW PRESS. MAKEUP AFTER DEPRESSURIZATION
27	1.78E-10	4.64E-04	%M5O_LOPP-H345	LOSS OF PREFERRED POWER - MODE 5O - H345
		2.38E-05	E50-SQV-CC-INJ_4_8	CCF of two components: E50-SQV-CC-INJ-F002D & E50-SQV-CC-INJ-F002H
		1.00E+00	FL_M5O-LOPP009	Sequence tag for M5O-LOPP009
		1.61E-02	XXX-XHE-FO-LPMAKEUP	OP. FAILS TO RECOG. NEED FOR LOW PRESS. MAKEUP AFTER DEPRESSURIZATION
28	1.55E-10	8.36E-04	%M5_LOPP-H345	LOSS OF PREFERRED POWER - MODE 5 - H345
		3.84E-02	B32-TM-LOOPA-IND	ICS LOOP A IN TEST OR MAINTENANCE BY ITSELF
		3.00E-04	E50-SQV-CC-EQU_ALL	CCF of all components in group 'E50-SQV-CC-EQU'
		1.00E+00	FL_M5-LOPP010	Sequence tag for M5-LOPP010
		1.61E-02	XXX-XHE-FO-LPMAKEUP	OP. FAILS TO RECOG. NEED FOR LOW PRESS. MAKEUP AFTER DEPRESSURIZATION

Table 14.6-3

High Wind Shutdown Cutset Report

CDF = 3.95E-08/yr
Top 200 Cutsets

29	1.55E-10	8.36E-04	%M5_LOPP-H345	LOSS OF PREFERRED POWER - MODE 5 - H345
		3.84E-02	B32-TM-LOOPB-IND	ICS LOOP B IN TEST OR MAINTENANCE BY ITSELF
		3.00E-04	E50-SQV-CC-EQU_ALL	CCF of all components in group 'E50-SQV-CC-EQU'
		1.00E+00	FL_M5-LOPP010	Sequence tag for M5-LOPP010
		1.61E-02	XXX-XHE-FO-LPMAKEUP	OP. FAILS TO RECOG. NEED FOR LOW PRESS. MAKEUP AFTER DEPRESSURIZATION
30	1.50E-10	8.36E-04	%M5_LOPP-H345	LOSS OF PREFERRED POWER - MODE 5 - H345
		3.60E-06	C63-LT_-NO-ESFRX_ALL	CCF of all components in group 'C63-LT_-NO-ESFRX'
		1.00E+00	FL_M5-LOPP016	Sequence tag for M5-LOPP016
		5.00E-02	MS-TOP2	TWO DPVs FAIL TO OPEN (MANUAL)
31	1.36E-10	8.36E-04	%M5_LOPP-H345	LOSS OF PREFERRED POWER - MODE 5 - H345
		3.84E-02	B32-TM-LOOPA-IND	ICS LOOP A IN TEST OR MAINTENANCE BY ITSELF
		2.63E-04	E50-BV_-OC-F004A	MAINTENANCE VALVE F004A PLUGS/TRANSFERS CLOSED
		1.00E+00	FL_M5-LOPP010	Sequence tag for M5-LOPP010
		1.61E-02	XXX-XHE-FO-LPMAKEUP	OP. FAILS TO RECOG. NEED FOR LOW PRESS. MAKEUP AFTER DEPRESSURIZATION

Table 14.6-3

High Wind Shutdown Cutset Report

CDF = 3.95E-08/yr
Top 200 Cutsets

32	1.36E-10	8.36E-04	%M5_LOPP-H345	LOSS OF PREFERRED POWER - MODE 5 - H345
		3.84E-02	B32-TM-LOOPA-IND	ICS LOOP A IN TEST OR MAINTENANCE BY ITSELF
		2.63E-04	E50-BV_-OC-F004D	MAINTENANCE VALVE F004D PLUGS/TRANSFERS CLOSED
		1.00E+00	FL_M5-LOPP010	Sequence tag for M5-LOPP010
		1.61E-02	XXX-XHE-FO-LPMAKEUP	OP. FAILS TO RECOG. NEED FOR LOW PRESS. MAKEUP AFTER DEPRESSURIZATION
33	1.36E-10	8.36E-04	%M5_LOPP-H345	LOSS OF PREFERRED POWER - MODE 5 - H345
		3.84E-02	B32-TM-LOOPB-IND	ICS LOOP B IN TEST OR MAINTENANCE BY ITSELF
		2.63E-04	E50-BV_-OC-F004A	MAINTENANCE VALVE F004A PLUGS/TRANSFERS CLOSED
		1.00E+00	FL_M5-LOPP010	Sequence tag for M5-LOPP010
		1.61E-02	XXX-XHE-FO-LPMAKEUP	OP. FAILS TO RECOG. NEED FOR LOW PRESS. MAKEUP AFTER DEPRESSURIZATION
34	1.36E-10	8.36E-04	%M5_LOPP-H345	LOSS OF PREFERRED POWER - MODE 5 - H345
		3.84E-02	B32-TM-LOOPB-IND	ICS LOOP B IN TEST OR MAINTENANCE BY ITSELF
		2.63E-04	E50-BV_-OC-F004D	MAINTENANCE VALVE F004D PLUGS/TRANSFERS CLOSED
		1.00E+00	FL_M5-LOPP010	Sequence tag for M5-LOPP010
		1.61E-02	XXX-XHE-FO-LPMAKEUP	OP. FAILS TO RECOG. NEED FOR LOW PRESS. MAKEUP AFTER DEPRESSURIZATION

Table 14.6-3

High Wind Shutdown Cutset Report

CDF = 3.95E-08/yr
Top 200 Cutsets

35	1.34E-10	4.64E-04	%M5O_LOPP-H345	LOSS OF PREFERRED POWER - MODE 5O - H345
		1.80E-05	C63-LOG-FC-ESFLG_ALL	CCF of all components in group 'C63-LOG-FC-ESFLG'
		1.00E+00	FL_M5O-LOPP009	Sequence tag for M5O-LOPP009
		1.61E-02	XXX-XHE-FO-LPMAKEUP	OP. FAILS TO RECOG. NEED FOR LOW PRESS. MAKEUP AFTER DEPRESSURIZATION
36	1.34E-10	4.64E-04	%M5O_LOPP-H345	LOSS OF PREFERRED POWER - MODE 5O - H345
		1.80E-05	C63-LOG-FC-ESFLG_ALL	CCF of all components in group 'C63-LOG-FC-ESFLG'
		1.00E+00	FL_M5O-LOPP010	Sequence tag for M5O-LOPP010
		1.61E-02	XXX-XHE-FO-LPMAKEUP	OP. FAILS TO RECOG. NEED FOR LOW PRESS. MAKEUP AFTER DEPRESSURIZATION
37	1.28E-10	4.64E-04	%M5O_LOPP-H345	LOSS OF PREFERRED POWER - MODE 5O - H345
		1.72E-05	E50-UV_-CC-INJ_ALL	CCF of all components in group 'E50-UV_-CC-INJ'
		1.00E+00	FL_M5O-LOPP009	Sequence tag for M5O-LOPP009
		1.61E-02	XXX-XHE-FO-LPMAKEUP	OP. FAILS TO RECOG. NEED FOR LOW PRESS. MAKEUP AFTER DEPRESSURIZATION
38	1.12E-10	4.64E-04	%M5O_LOPP-H345	LOSS OF PREFERRED POWER - MODE 5O - H345
		3.00E-04	E50-SQV-CC-EQU_ALL	CCF of all components in group 'E50-SQV-CC-EQU'
		1.00E+00	FL_M5O-LOPP014	Sequence tag for M5O-LOPP014
		5.00E-02	MS-TOP2	TWO DPVs FAIL TO OPEN (MANUAL)
		1.61E-02	XXX-XHE-FO-LPMAKEUP	OP. FAILS TO RECOG. NEED FOR LOW PRESS. MAKEUP AFTER DEPRESSURIZATION

Table 14.6-3

High Wind Shutdown Cutset Report

CDF = 3.95E-08/yr
Top 200 Cutsets

39	9.81E-11	4.64E-04	%M5O_LOPP-H345	LOSS OF PREFERRED POWER - MODE 5O - H345
		2.63E-04	E50-BV_-OC-F004A	MAINTENANCE VALVE F004A PLUGS/TRANSFERS CLOSED
		1.00E+00	FL_M5O-LOPP014	Sequence tag for M5O-LOPP014
		5.00E-02	MS-TOP2	TWO DPVs FAIL TO OPEN (MANUAL)
		1.61E-02	XXX-XHE-FO-LPMAKEUP	OP. FAILS TO RECOG. NEED FOR LOW PRESS. MAKEUP AFTER DEPRESSURIZATION
40	9.81E-11	4.64E-04	%M5O_LOPP-H345	LOSS OF PREFERRED POWER - MODE 5O - H345
		2.63E-04	E50-BV_-OC-F004D	MAINTENANCE VALVE F004D PLUGS/TRANSFERS CLOSED
		1.00E+00	FL_M5O-LOPP014	Sequence tag for M5O-LOPP014
		5.00E-02	MS-TOP2	TWO DPVs FAIL TO OPEN (MANUAL)
		1.61E-02	XXX-XHE-FO-LPMAKEUP	OP. FAILS TO RECOG. NEED FOR LOW PRESS. MAKEUP AFTER DEPRESSURIZATION
41	8.96E-11	4.64E-04	%M5O_LOPP-H345	LOSS OF PREFERRED POWER - MODE 5O - H345
		1.20E-05	E50-STR-PG_ALL	CCF of all components in group 'E50-STR-PG'
		1.00E+00	FL_M5O-LOPP009	Sequence tag for M5O-LOPP009
		1.61E-02	XXX-XHE-FO-LPMAKEUP	OP. FAILS TO RECOG. NEED FOR LOW PRESS. MAKEUP AFTER DEPRESSURIZATION

Table 14.6-3

High Wind Shutdown Cutset Report

CDF = 3.95E-08/yr
Top 200 Cutsets

42	8.49E-11	4.64E-04	%M5O_LOPP-H345	LOSS OF PREFERRED POWER - MODE 5O - H345
		1.00E+00	FL_M5O-LOPP009	Sequence tag for M5O-LOPP009
		1.14E-05	R13-INV-FC-CCFSR_ALL	CCF of all components in group 'R13-INV-FC-CCFSR'
		1.61E-02	XXX-XHE-FO-LPMAKEUP	OP. FAILS TO RECOG. NEED FOR LOW PRESS. MAKEUP AFTER DEPRESSURIZATION
43	8.49E-11	4.64E-04	%M5O_LOPP-H345	LOSS OF PREFERRED POWER - MODE 5O - H345
		1.00E+00	FL_M5O-LOPP010	Sequence tag for M5O-LOPP010
		1.14E-05	R13-INV-FC-CCFSR_ALL	CCF of all components in group 'R13-INV-FC-CCFSR'
		1.61E-02	XXX-XHE-FO-LPMAKEUP	OP. FAILS TO RECOG. NEED FOR LOW PRESS. MAKEUP AFTER DEPRESSURIZATION
44	8.36E-11	8.36E-04	%M5_LOPP-H345	LOSS OF PREFERRED POWER - MODE 5 - H345
		1.00E+00	B32-NONCONDENSE	Non condensable gasses form in ICS sufficiently to require venting
		1.76E-01	B32-XHE-FO-VENT	Operator fails to open vent
		1.00E+00	FL_M5-LOPP016	Sequence tag for M5-LOPP016
		5.00E-02	MS-TOP2	TWO DPVs FAIL TO OPEN (MANUAL)
		1.14E-05	R13-INV-FC-CCFSR_ALL	CCF of all components in group 'R13-INV-FC-CCFSR'

Table 14.6-3

High Wind Shutdown Cutset Report

CDF = 3.95E-08/yr
Top 200 Cutsets

45	8.35E-11	4.64E-04	%M5O_LOPP-H345	LOSS OF PREFERRED POWER - MODE 5O - H345
		3.60E-06	C63-LT_-NO-ESFRX_ALL	CCF of all components in group 'C63-LT_-NO-ESFRX'
		1.00E+00	FL_M5O-LOPP015	Sequence tag for M5O-LOPP015
		5.00E-02	MS-TOP2	TWO DPVs FAIL TO OPEN (MANUAL)
46	7.77E-11	8.36E-04	%M5_LOPP-H345	LOSS OF PREFERRED POWER - MODE 5 - H345
		1.86E-06	C63-LDD-FC-ESFLOADS	CCF OF ALL ESF LOAD DRIVERS
		1.00E+00	FL_M5-LOPP016	Sequence tag for M5-LOPP016
		5.00E-02	MS-TOP2	TWO DPVs FAIL TO OPEN (MANUAL)
47	7.75E-11	8.36E-04	%M5_LOPP-H345	LOSS OF PREFERRED POWER - MODE 5 - H345
		1.50E-04	B21-SQV-CC_ALL	CCF of all components in group 'B21-SQV-CC'
		3.84E-02	B32-TM-LOOPA-IND	ICS LOOP A IN TEST OR MAINTENANCE BY ITSELF
		1.00E+00	FL_M5-LOPP011	Sequence tag for M5-LOPP011
		1.61E-02	XXX-XHE-FO-LPMAKEUP	OP. FAILS TO RECOG. NEED FOR LOW PRESS. MAKEUP AFTER DEPRESSURIZATION
48	7.75E-11	8.36E-04	%M5_LOPP-H345	LOSS OF PREFERRED POWER - MODE 5 - H345
		1.50E-04	B21-SQV-CC_ALL	CCF of all components in group 'B21-SQV-CC'
		3.84E-02	B32-TM-LOOPB-IND	ICS LOOP B IN TEST OR MAINTENANCE BY ITSELF
		1.00E+00	FL_M5-LOPP011	Sequence tag for M5-LOPP011
		1.61E-02	XXX-XHE-FO-LPMAKEUP	OP. FAILS TO RECOG. NEED FOR LOW PRESS. MAKEUP AFTER DEPRESSURIZATION

Table 14.6-3

High Wind Shutdown Cutset Report

CDF = 3.95E-08/yr
Top 200 Cutsets

49	7.75E-11	8.36E-04	%M5_LOPP-H345	LOSS OF PREFERRED POWER - MODE 5 - H345
		3.84E-02	B32-TM-LOOPA-IND	ICS LOOP A IN TEST OR MAINTENANCE BY ITSELF
		1.50E-04	E50-SQV-CC-INJ_ALL	CCF of all components in group 'E50-SQV-CC-INJ'
		1.00E+00	FL_M5-LOPP010	Sequence tag for M5-LOPP010
		1.61E-02	XXX-XHE-FO-LPMAKEUP	OP. FAILS TO RECOG. NEED FOR LOW PRESS. MAKEUP AFTER DEPRESSURIZATION
50	7.75E-11	8.36E-04	%M5_LOPP-H345	LOSS OF PREFERRED POWER - MODE 5 - H345
		3.84E-02	B32-TM-LOOPB-IND	ICS LOOP B IN TEST OR MAINTENANCE BY ITSELF
		1.50E-04	E50-SQV-CC-INJ_ALL	CCF of all components in group 'E50-SQV-CC-INJ'
		1.00E+00	FL_M5-LOPP010	Sequence tag for M5-LOPP010
		1.61E-02	XXX-XHE-FO-LPMAKEUP	OP. FAILS TO RECOG. NEED FOR LOW PRESS. MAKEUP AFTER DEPRESSURIZATION
51	7.17E-11	4.64E-04	%M5O_LOPP-H345	LOSS OF PREFERRED POWER - MODE 5O - H345
		9.60E-06	E50-SQV-CO-F009A	SQUIB DELUGE VALVE F009A SPUR. OPENING [#7]
		1.00E+00	FL_M5O-LOPP009	Sequence tag for M5O-LOPP009
		1.61E-02	XXX-XHE-FO-LPMAKEUP	OP. FAILS TO RECOG. NEED FOR LOW PRESS. MAKEUP AFTER DEPRESSURIZATION
52	7.17E-11	4.64E-04	%M5O_LOPP-H345	LOSS OF PREFERRED POWER - MODE 5O - H345
		9.60E-06	E50-SQV-CO-F009D	SQUIB DELUGE VALVE F009D SPUR. OPENING [#7]
		1.00E+00	FL_M5O-LOPP009	Sequence tag for M5O-LOPP009
		1.61E-02	XXX-XHE-FO-LPMAKEUP	OP. FAILS TO RECOG. NEED FOR LOW PRESS. MAKEUP AFTER DEPRESSURIZATION

Table 14.6-3

High Wind Shutdown Cutset Report

CDF = 3.95E-08/yr
Top 200 Cutsets

53	7.17E-11	4.64E-04	%M5O_LOPP-H345	LOSS OF PREFERRED POWER - MODE 5O - H345
		9.60E-06	E50-SQV-CO-F009E	SQUIB DELUGE VALVE F009E SPUR. OPENING [#7]
		1.00E+00	FL_M5O-LOPP009	Sequence tag for M5O-LOPP009
		1.61E-02	XXX-XHE-FO-LPMAKEUP	OP. FAILS TO RECOG. NEED FOR LOW PRESS. MAKEUP AFTER DEPRESSURIZATION
54	7.17E-11	4.64E-04	%M5O_LOPP-H345	LOSS OF PREFERRED POWER - MODE 5O - H345
		9.60E-06	E50-SQV-CO-F009H	SQUIB DELUGE VALVE F009H SPUR. OPENING [#7]
		1.00E+00	FL_M5O-LOPP009	Sequence tag for M5O-LOPP009
		1.61E-02	XXX-XHE-FO-LPMAKEUP	OP. FAILS TO RECOG. NEED FOR LOW PRESS. MAKEUP AFTER DEPRESSURIZATION
55	7.17E-11	4.64E-04	%M5O_LOPP-H345	LOSS OF PREFERRED POWER - MODE 5O - H345
		9.60E-06	E50-SQV-CO-F009J	SQUIB DELUGE VALVE F009J SPUR. OPENING [#7]
		1.00E+00	FL_M5O-LOPP009	Sequence tag for M5O-LOPP009
		1.61E-02	XXX-XHE-FO-LPMAKEUP	OP. FAILS TO RECOG. NEED FOR LOW PRESS. MAKEUP AFTER DEPRESSURIZATION
56	7.17E-11	4.64E-04	%M5O_LOPP-H345	LOSS OF PREFERRED POWER - MODE 5O - H345
		9.60E-06	E50-SQV-CO-F009M	SQUIB DELUGE VALVE F009M SPUR. OPENING [#7]
		1.00E+00	FL_M5O-LOPP009	Sequence tag for M5O-LOPP009
		1.61E-02	XXX-XHE-FO-LPMAKEUP	OP. FAILS TO RECOG. NEED FOR LOW PRESS. MAKEUP AFTER DEPRESSURIZATION

Table 14.6-3

High Wind Shutdown Cutset Report

CDF = 3.95E-08/yr
Top 200 Cutsets

57	6.72E-11	4.64E-04	%M5O_LOPP-H345	LOSS OF PREFERRED POWER - MODE 5O - H345
		3.00E-03	E50-SQV-CC-INJ-F002A	SQUIB VALVE F002A FAILS TO OPERATE
		3.00E-03	E50-SQV-CC-INJ-F002E	SQUIB VALVE F002E FAILS TO OPERATE
		1.00E+00	FL_M5O-LOPP009	Sequence tag for M5O-LOPP009
		1.61E-02	XXX-XHE-FO-LPMAKEUP	OP. FAILS TO RECOG. NEED FOR LOW PRESS. MAKEUP AFTER DEPRESSURIZATION
58	6.72E-11	4.64E-04	%M5O_LOPP-H345	LOSS OF PREFERRED POWER - MODE 5O - H345
		3.00E-03	E50-SQV-CC-INJ-F002D	SQUIB VALVE F002D FAILS TO OPERATE
		3.00E-03	E50-SQV-CC-INJ-F002H	SQUIB VALVE F002H FAILS TO OPERATE
		1.00E+00	FL_M5O-LOPP009	Sequence tag for M5O-LOPP009
		1.61E-02	XXX-XHE-FO-LPMAKEUP	OP. FAILS TO RECOG. NEED FOR LOW PRESS. MAKEUP AFTER DEPRESSURIZATION
59	6.19E-11	4.64E-04	%M5O_LOPP-H345	LOSS OF PREFERRED POWER - MODE 5O - H345
		3.00E-04	E50-SQV-CC-EQU_ALL	CCF of all components in group 'E50-SQV-CC-EQU'
		1.00E+00	FL_M5O-LOPP009	Sequence tag for M5O-LOPP009
		4.44E-04	G21-MOV-CC-2_1_2	CCF of two components: G21-MOV-CC-F332A & G21-MOV-CC-F332B
60	5.60E-11	4.64E-04	%M5O_LOPP-H345	LOSS OF PREFERRED POWER - MODE 5O - H345
		1.50E-04	E50-SQV-CC-INJ_ALL	CCF of all components in group 'E50-SQV-CC-INJ'
		1.00E+00	FL_M5O-LOPP014	Sequence tag for M5O-LOPP014
		5.00E-02	MS-TOP2	TWO DPVs FAIL TO OPEN (MANUAL)
		1.61E-02	XXX-XHE-FO-LPMAKEUP	OP. FAILS TO RECOG. NEED FOR LOW PRESS. MAKEUP AFTER DEPRESSURIZATION

Table 14.6-3

High Wind Shutdown Cutset Report

CDF = 3.95E-08/yr
Top 200 Cutsets

61	5.42E-11	4.64E-04	%M5O_LOPP-H345	LOSS OF PREFERRED POWER - MODE 5O - H345
		2.63E-04	E50-BV_-OC-F004A	MAINTENANCE VALVE F004A PLUGS/TRANSFERS CLOSED
		1.00E+00	FL_M5O-LOPP009	Sequence tag for M5O-LOPP009
		4.44E-04	G21-MOV-CC-2_1_2	CCF of two components: G21-MOV-CC-F332A & G21-MOV-CC-F332B
62	5.42E-11	4.64E-04	%M5O_LOPP-H345	LOSS OF PREFERRED POWER - MODE 5O - H345
		2.63E-04	E50-BV_-OC-F004D	MAINTENANCE VALVE F004D PLUGS/TRANSFERS CLOSED
		1.00E+00	FL_M5O-LOPP009	Sequence tag for M5O-LOPP009
		4.44E-04	G21-MOV-CC-2_1_2	CCF of two components: G21-MOV-CC-F332A & G21-MOV-CC-F332B
63	5.38E-11	4.64E-04	%M5O_LOPP-H345	LOSS OF PREFERRED POWER - MODE 5O - H345
		7.20E-06	E50-POL-RP-POOLA	GDCS POOLS A LEAKS CATASTROPHICALLY
		1.00E+00	FL_M5O-LOPP009	Sequence tag for M5O-LOPP009
		1.61E-02	XXX-XHE-FO-LPMAKEUP	OP. FAILS TO RECOG. NEED FOR LOW PRESS. MAKEUP AFTER DEPRESSURIZATION
64	5.38E-11	4.64E-04	%M5O_LOPP-H345	LOSS OF PREFERRED POWER - MODE 5O - H345
		7.20E-06	E50-POL-RP-POOLD	GDCS POOL D LEAKS CATASTROPHICALLY
		1.00E+00	FL_M5O-LOPP009	Sequence tag for M5O-LOPP009
		1.61E-02	XXX-XHE-FO-LPMAKEUP	OP. FAILS TO RECOG. NEED FOR LOW PRESS. MAKEUP AFTER DEPRESSURIZATION

Table 14.6-3

High Wind Shutdown Cutset Report

CDF = 3.95E-08/yr
Top 200 Cutsets

65	5.38E-11	4.64E-04	%M5O_LOPP-H345	LOSS OF PREFERRED POWER - MODE 5O - H345
		1.00E+00	FL_M5O-LOPP009	Sequence tag for M5O-LOPP009
		7.20E-06	T23-POL-RP-SP	SUPPRESSION POOL LEAKS CATASTROPHICALLY
		1.61E-02	XXX-XHE-FO-LPMAKEUP	OP. FAILS TO RECOG. NEED FOR LOW PRESS. MAKEUP AFTER DEPRESSURIZATION
66	4.85E-11	8.36E-04	%M5_LOPP-H345	LOSS OF PREFERRED POWER - MODE 5 - H345
		3.60E-06	C63-LT_-NO-ESFRX_ALL	CCF of all components in group 'C63-LT_-NO-ESFRX'
		1.00E+00	FL_M5-LOPP011	Sequence tag for M5-LOPP011
		1.61E-02	XXX-XHE-FO-LPMAKEUP	OP. FAILS TO RECOG. NEED FOR LOW PRESS. MAKEUP AFTER DEPRESSURIZATION
67	4.64E-11	8.36E-04	%M5_LOPP-H345	LOSS OF PREFERRED POWER - MODE 5 - H345
		1.11E-06	C63-DTM-FC-ESFLG_1_2_3	CCF of three components: C63-DTM-FC-ESFD1 & C63-DTM-FC-ESFD2 & C63-DTM-FC-ESFD3
		1.00E+00	FL_M5-LOPP016	Sequence tag for M5-LOPP016
		5.00E-02	MS-TOP2	TWO DPVs FAIL TO OPEN (MANUAL)
68	4.64E-11	8.36E-04	%M5_LOPP-H345	LOSS OF PREFERRED POWER - MODE 5 - H345
		1.11E-06	C63-DTM-FC-ESFLG_1_2_4	CCF of three components: C63-DTM-FC-ESFD1 & C63-DTM-FC-ESFD2 & C63-DTM-FC-ESFD4
		1.00E+00	FL_M5-LOPP016	Sequence tag for M5-LOPP016
		5.00E-02	MS-TOP2	TWO DPVs FAIL TO OPEN (MANUAL)

Table 14.6-3

High Wind Shutdown Cutset Report

CDF = 3.95E-08/yr
Top 200 Cutsets

69	4.64E-11	8.36E-04	%M5_LOPP-H345	LOSS OF PREFERRED POWER - MODE 5 - H345
		1.11E-06	C63-DTM-FC-ESFLG_1_3_4	CCF of three components: C63-DTM-FC-ESFD1 & C63-DTM-FC-ESFD3 & C63-DTM-FC-ESFD4
		1.00E+00	FL_M5-LOPP016	Sequence tag for M5-LOPP016
		5.00E-02	MS-TOP2	TWO DPVs FAIL TO OPEN (MANUAL)
70	4.64E-11	8.36E-04	%M5_LOPP-H345	LOSS OF PREFERRED POWER - MODE 5 - H345
		1.11E-06	C63-DTM-FC-ESFLG_2_3_4	CCF of three components: C63-DTM-FC-ESFD2 & C63-DTM-FC-ESFD3 & C63-DTM-FC-ESFD4
		1.00E+00	FL_M5-LOPP016	Sequence tag for M5-LOPP016
		5.00E-02	MS-TOP2	TWO DPVs FAIL TO OPEN (MANUAL)
71	4.32E-11	4.64E-04	%M5O_LOPP-H345	LOSS OF PREFERRED POWER - MODE 5O - H345
		1.86E-06	C63-LDD-FC-ESFLOADS	CCF OF ALL ESF LOAD DRIVERS
		1.00E+00	FL_M5O-LOPP015	Sequence tag for M5O-LOPP015
		5.00E-02	MS-TOP2	TWO DPVs FAIL TO OPEN (MANUAL)
72	3.74E-11	4.64E-04	%M5O_LOPP-H345	LOSS OF PREFERRED POWER - MODE 5O - H345
		1.00E-04	C63-CCFSOFTWARE	Common cause failure of software
		1.00E+00	FL_M5O-LOPP014	Sequence tag for M5O-LOPP014
		5.00E-02	MS-TOP2	TWO DPVs FAIL TO OPEN (MANUAL)
		1.61E-02	XXX-XHE-FO-LPMAKEUP	OP. FAILS TO RECOG. NEED FOR LOW PRESS. MAKEUP AFTER DEPRESSURIZATION

Table 14.6-3

High Wind Shutdown Cutset Report

CDF = 3.95E-08/yr
Top 200 Cutsets

73	3.72E-11	8.36E-04	%M5_LOPP-H345	LOSS OF PREFERRED POWER - MODE 5 - H345
		1.00E-04	C63-CCFSOFTWARE	Common cause failure of software
		1.00E+00	FL_M5-LOPP010	Sequence tag for M5-LOPP010
		4.44E-04	G21-MOV-CC-2_1_2	CCF of two components: G21-MOV-CC-F332A & G21-MOV-CC-F332B
74	3.72E-11	8.36E-04	%M5_LOPP-H345	LOSS OF PREFERRED POWER - MODE 5 - H345
		1.00E-04	C63-CCFSOFTWARE	Common cause failure of software
		1.00E+00	FL_M5-LOPP011	Sequence tag for M5-LOPP011
		4.44E-04	G21-MOV-CC-2_1_2	CCF of two components: G21-MOV-CC-F332A & G21-MOV-CC-F332B
75	3.09E-11	4.64E-04	%M5O_LOPP-H345	LOSS OF PREFERRED POWER - MODE 5O - H345
		1.50E-04	B21-SQV-CC_ALL	CCF of all components in group 'B21-SQV-CC'
		1.00E+00	FL_M5O-LOPP010	Sequence tag for M5O-LOPP010
		4.44E-04	G21-MOV-CC-2_1_2	CCF of two components: G21-MOV-CC-F332A & G21-MOV-CC-F332B
76	3.09E-11	4.64E-04	%M5O_LOPP-H345	LOSS OF PREFERRED POWER - MODE 5O - H345
		1.50E-04	E50-SQV-CC-INJ_ALL	CCF of all components in group 'E50-SQV-CC-INJ'
		1.00E+00	FL_M5O-LOPP009	Sequence tag for M5O-LOPP009
		4.44E-04	G21-MOV-CC-2_1_2	CCF of two components: G21-MOV-CC-F332A & G21-MOV-CC-F332B

Table 14.6-3

High Wind Shutdown Cutset Report

CDF = 3.95E-08/yr
Top 200 Cutsets

77	2.69E-11	8.36E-04	%M5_LOPP-H345	LOSS OF PREFERRED POWER - MODE 5 - H345
		1.00E+00	B32-NONCONDENSE	Non condensable gasses form in ICS sufficiently to require venting
		1.76E-01	B32-XHE-FO-VENT	Operator fails to open vent
		1.00E+00	FL_M5-LOPP010	Sequence tag for M5-LOPP010
		1.14E-05	R13-INV-FC-CCFSR_ALL	CCF of all components in group 'R13-INV-FC-CCFSR'
		1.61E-02	XXX-XHE-FO-LPMAKEUP	OP. FAILS TO RECOG. NEED FOR LOW PRESS. MAKEUP AFTER DEPRESSURIZATION
78	2.69E-11	8.36E-04	%M5_LOPP-H345	LOSS OF PREFERRED POWER - MODE 5 - H345
		1.00E+00	B32-NONCONDENSE	Non condensable gasses form in ICS sufficiently to require venting
		1.76E-01	B32-XHE-FO-VENT	Operator fails to open vent
		1.00E+00	FL_M5-LOPP011	Sequence tag for M5-LOPP011
		1.14E-05	R13-INV-FC-CCFSR_ALL	CCF of all components in group 'R13-INV-FC-CCFSR'
		1.61E-02	XXX-XHE-FO-LPMAKEUP	OP. FAILS TO RECOG. NEED FOR LOW PRESS. MAKEUP AFTER DEPRESSURIZATION
79	2.69E-11	4.64E-04	%M5O_LOPP-H345	LOSS OF PREFERRED POWER - MODE 5O - H345
		3.60E-06	C63-LT_-NO-ESFRX_ALL	CCF of all components in group 'C63-LT_-NO-ESFRX'
		1.00E+00	FL_M5O-LOPP010	Sequence tag for M5O-LOPP010
		1.61E-02	XXX-XHE-FO-LPMAKEUP	OP. FAILS TO RECOG. NEED FOR LOW PRESS. MAKEUP AFTER DEPRESSURIZATION

Table 14.6-3

High Wind Shutdown Cutset Report

CDF = 3.95E-08/yr
Top 200 Cutsets

80	2.58E-11	4.64E-04	%M5O_LOPP-H345	LOSS OF PREFERRED POWER - MODE 5O - H345
		1.11E-06	C63-DTM-FC-ESFLG_1_2_3	CCF of three components: C63-DTM-FC-ESFD1 & C63-DTM-FC-ESFD2 & C63-DTM-FC-ESFD3
		1.00E+00	FL_M5O-LOPP015	Sequence tag for M5O-LOPP015
		5.00E-02	MS-TOP2	TWO DPVs FAIL TO OPEN (MANUAL)
81	2.58E-11	4.64E-04	%M5O_LOPP-H345	LOSS OF PREFERRED POWER - MODE 5O - H345
		1.11E-06	C63-DTM-FC-ESFLG_1_2_4	CCF of three components: C63-DTM-FC-ESFD1 & C63-DTM-FC-ESFD2 & C63-DTM-FC-ESFD4
		1.00E+00	FL_M5O-LOPP015	Sequence tag for M5O-LOPP015
		5.00E-02	MS-TOP2	TWO DPVs FAIL TO OPEN (MANUAL)
82	2.58E-11	4.64E-04	%M5O_LOPP-H345	LOSS OF PREFERRED POWER - MODE 5O - H345
		1.11E-06	C63-DTM-FC-ESFLG_1_3_4	CCF of three components: C63-DTM-FC-ESFD1 & C63-DTM-FC-ESFD3 & C63-DTM-FC-ESFD4
		1.00E+00	FL_M5O-LOPP015	Sequence tag for M5O-LOPP015
		5.00E-02	MS-TOP2	TWO DPVs FAIL TO OPEN (MANUAL)
83	2.58E-11	4.64E-04	%M5O_LOPP-H345	LOSS OF PREFERRED POWER - MODE 5O - H345
		1.11E-06	C63-DTM-FC-ESFLG_2_3_4	CCF of three components: C63-DTM-FC-ESFD2 & C63-DTM-FC-ESFD3 & C63-DTM-FC-ESFD4
		1.00E+00	FL_M5O-LOPP015	Sequence tag for M5O-LOPP015
		5.00E-02	MS-TOP2	TWO DPVs FAIL TO OPEN (MANUAL)

Table 14.6-3

High Wind Shutdown Cutset Report

CDF = 3.95E-08/yr
Top 200 Cutsets

84	2.50E-11	8.36E-04	%M5_LOPP-H345	LOSS OF PREFERRED POWER - MODE 5 - H345
		1.86E-06	C63-LDD-FC-ESFLOADS	CCF OF ALL ESF LOAD DRIVERS
		1.00E+00	FL_M5-LOPP010	Sequence tag for M5-LOPP010
		1.61E-02	XXX-XHE-FO-LPMAKEUP	OP. FAILS TO RECOG. NEED FOR LOW PRESS. MAKEUP AFTER DEPRESSURIZATION
85	2.50E-11	8.36E-04	%M5_LOPP-H345	LOSS OF PREFERRED POWER - MODE 5 - H345
		1.86E-06	C63-LDD-FC-ESFLOADS	CCF OF ALL ESF LOAD DRIVERS
		1.00E+00	FL_M5-LOPP011	Sequence tag for M5-LOPP011
		1.61E-02	XXX-XHE-FO-LPMAKEUP	OP. FAILS TO RECOG. NEED FOR LOW PRESS. MAKEUP AFTER DEPRESSURIZATION
86	2.24E-11	4.64E-04	%M5O_LOPP-H345	LOSS OF PREFERRED POWER - MODE 5O - H345
		3.00E-03	E50-SQV-CC-INJ-F002A	SQUIB VALVE F002A FAILS TO OPERATE
		1.00E-03	E50-UV_-CC-INJ-F003E	INJECTION CHECK VALVE F003E FAILS TO OPEN
		1.00E+00	FL_M5O-LOPP009	Sequence tag for M5O-LOPP009
		1.61E-02	XXX-XHE-FO-LPMAKEUP	OP. FAILS TO RECOG. NEED FOR LOW PRESS. MAKEUP AFTER DEPRESSURIZATION

Table 14.6-3

High Wind Shutdown Cutset Report

CDF = 3.95E-08/yr
Top 200 Cutsets

87	2.24E-11	4.64E-04	%M5O_LOPP-H345	LOSS OF PREFERRED POWER - MODE 5O - H345
		3.00E-03	E50-SQV-CC-INJ-F002D	SQUIB VALVE F002D FAILS TO OPERATE
		1.00E-03	E50-UV_-CC-INJ-F003H	INJECTION CHECK VALVE F003H FAILS TO OPEN
		1.00E+00	FL_M5O-LOPP009	Sequence tag for M5O-LOPP009
		1.61E-02	XXX-XHE-FO-LPMAKEUP	OP. FAILS TO RECOG. NEED FOR LOW PRESS. MAKEUP AFTER DEPRESSURIZATION
88	2.24E-11	4.64E-04	%M5O_LOPP-H345	LOSS OF PREFERRED POWER - MODE 5O - H345
		3.00E-03	E50-SQV-CC-INJ-F002E	SQUIB VALVE F002E FAILS TO OPERATE
		1.00E-03	E50-UV_-CC-INJ-F003A	INJECTION CHECK VALVE F003A FAILS TO OPEN
		1.00E+00	FL_M5O-LOPP009	Sequence tag for M5O-LOPP009
		1.61E-02	XXX-XHE-FO-LPMAKEUP	OP. FAILS TO RECOG. NEED FOR LOW PRESS. MAKEUP AFTER DEPRESSURIZATION
89	2.24E-11	4.64E-04	%M5O_LOPP-H345	LOSS OF PREFERRED POWER - MODE 5O - H345
		3.00E-03	E50-SQV-CC-INJ-F002H	SQUIB VALVE F002H FAILS TO OPERATE
		1.00E-03	E50-UV_-CC-INJ-F003D	INJECTION CHECK VALVE F003D FAILS TO OPEN
		1.00E+00	FL_M5O-LOPP009	Sequence tag for M5O-LOPP009
		1.61E-02	XXX-XHE-FO-LPMAKEUP	OP. FAILS TO RECOG. NEED FOR LOW PRESS. MAKEUP AFTER DEPRESSURIZATION
90	2.06E-11	4.64E-04	%M5O_LOPP-H345	LOSS OF PREFERRED POWER - MODE 5O - H345
		1.00E-04	C63-CCFSOFTWARE	Common cause failure of software
		1.00E+00	FL_M5O-LOPP009	Sequence tag for M5O-LOPP009
		4.44E-04	G21-MOV-CC-2_1_2	CCF of two components: G21-MOV-CC-F332A & G21-MOV-CC-F332B

Table 14.6-3

High Wind Shutdown Cutset Report

CDF = 3.95E-08/yr
Top 200 Cutsets

91	2.06E-11	4.64E-04	%M5O_LOPP-H345	LOSS OF PREFERRED POWER - MODE 5O - H345
		1.00E-04	C63-CCFSOFTWARE	Common cause failure of software
		1.00E+00	FL_M5O-LOPP010	Sequence tag for M5O-LOPP010
		4.44E-04	G21-MOV-CC-2_1_2	CCF of two components: G21-MOV-CC-F332A & G21-MOV-CC-F332B
92	1.89E-11	4.64E-04	%M5O_LOPP-H345	LOSS OF PREFERRED POWER - MODE 5O - H345
		1.00E+00	FL_M5O-LOPP015	Sequence tag for M5O-LOPP015
		5.00E-02	MS-TOP2	TWO DPVs FAIL TO OPEN (MANUAL)
		8.14E-07	R16-BT_-LP-CCFSR_ALL	CCF of all components in group 'R16-BT_-LP-CCFSR'
93	1.84E-11	4.64E-04	%M5O_LOPP-H345	LOSS OF PREFERRED POWER - MODE 5O - H345
		7.94E-07	B21-SQV-CC_1_2_3	CCF of three components: B21-SQV-CC-F004A & B21-SQV-CC-F004B & B21-SQV-CC-F004C
		1.00E+00	FL_M5O-LOPP015	Sequence tag for M5O-LOPP015
		5.00E-02	MS-TOP2	TWO DPVs FAIL TO OPEN (MANUAL)
94	1.84E-11	4.64E-04	%M5O_LOPP-H345	LOSS OF PREFERRED POWER - MODE 5O - H345
		7.94E-07	B21-SQV-CC_1_2_4	CCF of three components: B21-SQV-CC-F004A & B21-SQV-CC-F004B & B21-SQV-CC-F004D
		1.00E+00	FL_M5O-LOPP015	Sequence tag for M5O-LOPP015
		5.00E-02	MS-TOP2	TWO DPVs FAIL TO OPEN (MANUAL)

Table 14.6-3

High Wind Shutdown Cutset Report

CDF = 3.95E-08/yr
Top 200 Cutsets

96	1.84E-11	4.64E-04	%M5O_LOPP-H345	LOSS OF PREFERRED POWER - MODE 5O - H345
		7.94E-07	B21-SQV-CC_1_2_6	CCF of three components: B21-SQV-CC-F004A & B21-SQV-CC-F004B & B21-SQV-CC-F004F
		1.00E+00	FL_M5O-LOPP015	Sequence tag for M5O-LOPP015
		5.00E-02	MS-TOP2	TWO DPVs FAIL TO OPEN (MANUAL)
97	1.84E-11	4.64E-04	%M5O_LOPP-H345	LOSS OF PREFERRED POWER - MODE 5O - H345
		7.94E-07	B21-SQV-CC_1_3_4	CCF of three components: B21-SQV-CC-F004A & B21-SQV-CC-F004C & B21-SQV-CC-F004D
		1.00E+00	FL_M5O-LOPP015	Sequence tag for M5O-LOPP015
		5.00E-02	MS-TOP2	TWO DPVs FAIL TO OPEN (MANUAL)
98	1.84E-11	4.64E-04	%M5O_LOPP-H345	LOSS OF PREFERRED POWER - MODE 5O - H345
		7.94E-07	B21-SQV-CC_1_3_5	CCF of three components: B21-SQV-CC-F004A & B21-SQV-CC-F004C & B21-SQV-CC-F004E
		1.00E+00	FL_M5O-LOPP015	Sequence tag for M5O-LOPP015
		5.00E-02	MS-TOP2	TWO DPVs FAIL TO OPEN (MANUAL)
99	1.84E-11	4.64E-04	%M5O_LOPP-H345	LOSS OF PREFERRED POWER - MODE 5O - H345
		7.94E-07	B21-SQV-CC_1_3_6	CCF of three components: B21-SQV-CC-F004A & B21-SQV-CC-F004C & B21-SQV-CC-F004F
		1.00E+00	FL_M5O-LOPP015	Sequence tag for M5O-LOPP015
		5.00E-02	MS-TOP2	TWO DPVs FAIL TO OPEN (MANUAL)

Table 14.6-3

High Wind Shutdown Cutset Report

CDF = 3.95E-08/yr
Top 200 Cutsets

100	1.84E-11	4.64E-04	%M5O_LOPP-H345	LOSS OF PREFERRED POWER - MODE 5O - H345
		7.94E-07	B21-SQV-CC_1_4_5	CCF of three components: B21-SQV-CC-F004A & B21-SQV-CC-F004D & B21-SQV-CC-F004E
		1.00E+00	FL_M5O-LOPP015	Sequence tag for M5O-LOPP015
		5.00E-02	MS-TOP2	TWO DPVs FAIL TO OPEN (MANUAL)
101	1.84E-11	4.64E-04	%M5O_LOPP-H345	LOSS OF PREFERRED POWER - MODE 5O - H345
		7.94E-07	B21-SQV-CC_1_4_6	CCF of three components: B21-SQV-CC-F004A & B21-SQV-CC-F004D & B21-SQV-CC-F004F
		1.00E+00	FL_M5O-LOPP015	Sequence tag for M5O-LOPP015
		5.00E-02	MS-TOP2	TWO DPVs FAIL TO OPEN (MANUAL)
102	1.84E-11	4.64E-04	%M5O_LOPP-H345	LOSS OF PREFERRED POWER - MODE 5O - H345
		7.94E-07	B21-SQV-CC_1_5_6	CCF of three components: B21-SQV-CC-F004A & B21-SQV-CC-F004E & B21-SQV-CC-F004F
		1.00E+00	FL_M5O-LOPP015	Sequence tag for M5O-LOPP015
		5.00E-02	MS-TOP2	TWO DPVs FAIL TO OPEN (MANUAL)
103	1.84E-11	4.64E-04	%M5O_LOPP-H345	LOSS OF PREFERRED POWER - MODE 5O - H345
		7.94E-07	B21-SQV-CC_2_3_4	CCF of three components: B21-SQV-CC-F004B & B21-SQV-CC-F004C & B21-SQV-CC-F004D
		1.00E+00	FL_M5O-LOPP015	Sequence tag for M5O-LOPP015
		5.00E-02	MS-TOP2	TWO DPVs FAIL TO OPEN (MANUAL)

Table 14.6-3

High Wind Shutdown Cutset Report

CDF = 3.95E-08/yr
Top 200 Cutsets

104	1.84E-11	4.64E-04	%M5O_LOPP-H345	LOSS OF PREFERRED POWER - MODE 5O - H345
		7.94E-07	B21-SQV-CC_2_3_5	CCF of three components: B21-SQV-CC-F004B & B21-SQV-CC-F004C & B21-SQV-CC-F004E
		1.00E+00	FL_M5O-LOPP015	Sequence tag for M5O-LOPP015
		5.00E-02	MS-TOP2	TWO DPVs FAIL TO OPEN (MANUAL)
105	1.84E-11	4.64E-04	%M5O_LOPP-H345	LOSS OF PREFERRED POWER - MODE 5O - H345
		7.94E-07	B21-SQV-CC_2_3_6	CCF of three components: B21-SQV-CC-F004B & B21-SQV-CC-F004C & B21-SQV-CC-F004F
		1.00E+00	FL_M5O-LOPP015	Sequence tag for M5O-LOPP015
		5.00E-02	MS-TOP2	TWO DPVs FAIL TO OPEN (MANUAL)
106	1.84E-11	4.64E-04	%M5O_LOPP-H345	LOSS OF PREFERRED POWER - MODE 5O - H345
		7.94E-07	B21-SQV-CC_2_4_5	CCF of three components: B21-SQV-CC-F004B & B21-SQV-CC-F004D & B21-SQV-CC-F004E
		1.00E+00	FL_M5O-LOPP015	Sequence tag for M5O-LOPP015
		5.00E-02	MS-TOP2	TWO DPVs FAIL TO OPEN (MANUAL)
107	1.84E-11	4.64E-04	%M5O_LOPP-H345	LOSS OF PREFERRED POWER - MODE 5O - H345
		7.94E-07	B21-SQV-CC_2_4_6	CCF of three components: B21-SQV-CC-F004B & B21-SQV-CC-F004D & B21-SQV-CC-F004F
		1.00E+00	FL_M5O-LOPP015	Sequence tag for M5O-LOPP015
		5.00E-02	MS-TOP2	TWO DPVs FAIL TO OPEN (MANUAL)

Table 14.6-3

High Wind Shutdown Cutset Report

CDF = 3.95E-08/yr
Top 200 Cutsets

108	1.84E-11	4.64E-04	%M5O_LOPP-H345	LOSS OF PREFERRED POWER - MODE 5O - H345
		7.94E-07	B21-SQV-CC_2_5_6	CCF of three components: B21-SQV-CC-F004B & B21-SQV-CC-F004E & B21-SQV-CC-F004F
		1.00E+00	FL_M5O-LOPP015	Sequence tag for M5O-LOPP015
		5.00E-02	MS-TOP2	TWO DPVs FAIL TO OPEN (MANUAL)
109	1.84E-11	4.64E-04	%M5O_LOPP-H345	LOSS OF PREFERRED POWER - MODE 5O - H345
		7.94E-07	B21-SQV-CC_3_4_5	CCF of three components: B21-SQV-CC-F004C & B21-SQV-CC-F004D & B21-SQV-CC-F004E
		1.00E+00	FL_M5O-LOPP015	Sequence tag for M5O-LOPP015
		5.00E-02	MS-TOP2	TWO DPVs FAIL TO OPEN (MANUAL)
110	1.84E-11	4.64E-04	%M5O_LOPP-H345	LOSS OF PREFERRED POWER - MODE 5O - H345
		7.94E-07	B21-SQV-CC_3_4_6	CCF of three components: B21-SQV-CC-F004C & B21-SQV-CC-F004D & B21-SQV-CC-F004F
		1.00E+00	FL_M5O-LOPP015	Sequence tag for M5O-LOPP015
		5.00E-02	MS-TOP2	TWO DPVs FAIL TO OPEN (MANUAL)
111	1.84E-11	4.64E-04	%M5O_LOPP-H345	LOSS OF PREFERRED POWER - MODE 5O - H345
		7.94E-07	B21-SQV-CC_3_5_6	CCF of three components: B21-SQV-CC-F004C & B21-SQV-CC-F004E & B21-SQV-CC-F004F
		1.00E+00	FL_M5O-LOPP015	Sequence tag for M5O-LOPP015
		5.00E-02	MS-TOP2	TWO DPVs FAIL TO OPEN (MANUAL)

Table 14.6-3

High Wind Shutdown Cutset Report

CDF = 3.95E-08/yr
Top 200 Cutsets

112	1.84E-11	4.64E-04	%M5O_LOPP-H345	LOSS OF PREFERRED POWER - MODE 5O - H345
		7.94E-07	B21-SQV-CC_4_5_6	CCF of three components: B21-SQV-CC-F004D & B21-SQV-CC-F004E & B21-SQV-CC-F004F
		1.00E+00	FL_M5O-LOPP015	Sequence tag for M5O-LOPP015
		5.00E-02	MS-TOP2	TWO DPVs FAIL TO OPEN (MANUAL)
113	1.83E-11	8.36E-04	%M5_LOPP-H345	LOSS OF PREFERRED POWER - MODE 5 - H345
		3.84E-02	B32-TM-LOOPA-IND	ICS LOOP A IN TEST OR MAINTENANCE BY ITSELF
		1.00E+00	FL_M5-LOPP016	Sequence tag for M5-LOPP016
		5.00E-02	MS-TOP2	TWO DPVs FAIL TO OPEN (MANUAL)
		1.14E-05	R13-INV-FC-CCFSR_ALL	CCF of all components in group 'R13-INV-FC-CCFSR'
114	1.83E-11	8.36E-04	%M5_LOPP-H345	LOSS OF PREFERRED POWER - MODE 5 - H345
		3.84E-02	B32-TM-LOOPB-IND	ICS LOOP B IN TEST OR MAINTENANCE BY ITSELF
		1.00E+00	FL_M5-LOPP016	Sequence tag for M5-LOPP016
		5.00E-02	MS-TOP2	TWO DPVs FAIL TO OPEN (MANUAL)
		1.14E-05	R13-INV-FC-CCFSR_ALL	CCF of all components in group 'R13-INV-FC-CCFSR'

Table 14.6-3

High Wind Shutdown Cutset Report

CDF = 3.95E-08/yr
Top 200 Cutsets

115	1.50E-11	8.36E-04	%M5_LOPP-H345	LOSS OF PREFERRED POWER - MODE 5 - H345
		1.11E-06	C63-DTM-FC-ESFLG_1_2_3	CCF of three components: C63-DTM-FC-ESFD1 & C63-DTM-FC-ESFD2 & C63-DTM-FC-ESFD3
		1.00E+00	FL_M5-LOPP010	Sequence tag for M5-LOPP010
		1.61E-02	XXX-XHE-FO-LPMAKEUP	OP. FAILS TO RECOG. NEED FOR LOW PRESS. MAKEUP AFTER DEPRESSURIZATION
116	1.50E-11	8.36E-04	%M5_LOPP-H345	LOSS OF PREFERRED POWER - MODE 5 - H345
		1.11E-06	C63-DTM-FC-ESFLG_1_2_3	CCF of three components: C63-DTM-FC-ESFD1 & C63-DTM-FC-ESFD2 & C63-DTM-FC-ESFD3
		1.00E+00	FL_M5-LOPP011	Sequence tag for M5-LOPP011
		1.61E-02	XXX-XHE-FO-LPMAKEUP	OP. FAILS TO RECOG. NEED FOR LOW PRESS. MAKEUP AFTER DEPRESSURIZATION
117	1.50E-11	8.36E-04	%M5_LOPP-H345	LOSS OF PREFERRED POWER - MODE 5 - H345
		1.11E-06	C63-DTM-FC-ESFLG_1_2_4	CCF of three components: C63-DTM-FC-ESFD1 & C63-DTM-FC-ESFD2 & C63-DTM-FC-ESFD4
		1.00E+00	FL_M5-LOPP010	Sequence tag for M5-LOPP010
		1.61E-02	XXX-XHE-FO-LPMAKEUP	OP. FAILS TO RECOG. NEED FOR LOW PRESS. MAKEUP AFTER DEPRESSURIZATION

Table 14.6-3

High Wind Shutdown Cutset Report

CDF = 3.95E-08/yr
Top 200 Cutsets

118	1.50E-11	8.36E-04	%M5_LOPP-H345	LOSS OF PREFERRED POWER - MODE 5 - H345
		1.11E-06	C63-DTM-FC-ESFLG_1_2_4	CCF of three components: C63-DTM-FC-ESFD1 & C63-DTM-FC-ESFD2 & C63-DTM-FC-ESFD4
		1.00E+00	FL_M5-LOPP011	Sequence tag for M5-LOPP011
		1.61E-02	XXX-XHE-FO-LPMAKEUP	OP. FAILS TO RECOG. NEED FOR LOW PRESS. MAKEUP AFTER DEPRESSURIZATION
119	1.50E-11	8.36E-04	%M5_LOPP-H345	LOSS OF PREFERRED POWER - MODE 5 - H345
		1.11E-06	C63-DTM-FC-ESFLG_1_3_4	CCF of three components: C63-DTM-FC-ESFD1 & C63-DTM-FC-ESFD3 & C63-DTM-FC-ESFD4
		1.00E+00	FL_M5-LOPP010	Sequence tag for M5-LOPP010
		1.61E-02	XXX-XHE-FO-LPMAKEUP	OP. FAILS TO RECOG. NEED FOR LOW PRESS. MAKEUP AFTER DEPRESSURIZATION
120	1.50E-11	8.36E-04	%M5_LOPP-H345	LOSS OF PREFERRED POWER - MODE 5 - H345
		1.11E-06	C63-DTM-FC-ESFLG_1_3_4	CCF of three components: C63-DTM-FC-ESFD1 & C63-DTM-FC-ESFD3 & C63-DTM-FC-ESFD4
		1.00E+00	FL_M5-LOPP011	Sequence tag for M5-LOPP011
		1.61E-02	XXX-XHE-FO-LPMAKEUP	OP. FAILS TO RECOG. NEED FOR LOW PRESS. MAKEUP AFTER DEPRESSURIZATION

Table 14.6-3

High Wind Shutdown Cutset Report

CDF = 3.95E-08/yr
Top 200 Cutsets

121	1.50E-11	8.36E-04	%M5_LOPP-H345	LOSS OF PREFERRED POWER - MODE 5 - H345
		1.11E-06	C63-DTM-FC-ESFLG_2_3_4	CCF of three components: C63-DTM-FC-ESFD2 & C63-DTM-FC-ESFD3 & C63-DTM-FC-ESFD4
		1.00E+00	FL_M5-LOPP010	Sequence tag for M5-LOPP010
		1.61E-02	XXX-XHE-FO-LPMAKEUP	OP. FAILS TO RECOG. NEED FOR LOW PRESS. MAKEUP AFTER DEPRESSURIZATION
122	1.50E-11	8.36E-04	%M5_LOPP-H345	LOSS OF PREFERRED POWER - MODE 5 - H345
		1.00E+00	FL_M5-LOPP011	Sequence tag for M5-LOPP011
		1.61E-02	XXX-XHE-FO-LPMAKEUP	OP. FAILS TO RECOG. NEED FOR LOW PRESS. MAKEUP AFTER DEPRESSURIZATION
123	1.39E-11	4.64E-04	%M5O_LOPP-H345	LOSS OF PREFERRED POWER - MODE 5O - H345
		1.00E-04	B21-UV_-CC-F102A	CHECK VALVE F102A FAILS TO OPEN
		3.00E-04	E50-SQV-CC-EQU_ALL	CCF of all components in group 'E50-SQV-CC-EQU'
		1.00E+00	FL_M5O-LOPP009	Sequence tag for M5O-LOPP009
124	1.39E-11	4.64E-04	%M5O_LOPP-H345	LOSS OF PREFERRED POWER - MODE 5O - H345
		1.00E-04	B21-UV_-CC-F111A	CHECK VALVE F111A FAILS TO OPEN
		3.00E-04	E50-SQV-CC-EQU_ALL	CCF of all components in group 'E50-SQV-CC-EQU'
		1.00E+00	FL_M5O-LOPP009	Sequence tag for M5O-LOPP009

Table 14.6-3

High Wind Shutdown Cutset Report

CDF = 3.95E-08/yr
Top 200 Cutsets

125	1.39E-11	4.64E-04	%M5O_LOPP-H345	LOSS OF PREFERRED POWER - MODE 5O - H345
		1.86E-06	C63-LDD-FC-ESFLOADS	CCF OF ALL ESF LOAD DRIVERS
		1.00E+00	FL_M5O-LOPP009	Sequence tag for M5O-LOPP009
		1.61E-02	XXX-XHE-FO-LPMAKEUP	OP. FAILS TO RECOG. NEED FOR LOW PRESS. MAKEUP AFTER DEPRESSURIZATION
126	1.39E-11	4.64E-04	%M5O_LOPP-H345	LOSS OF PREFERRED POWER - MODE 5O - H345
		1.86E-06	C63-LDD-FC-ESFLOADS	CCF OF ALL ESF LOAD DRIVERS
		1.00E+00	FL_M5O-LOPP010	Sequence tag for M5O-LOPP010
		1.61E-02	XXX-XHE-FO-LPMAKEUP	OP. FAILS TO RECOG. NEED FOR LOW PRESS. MAKEUP AFTER DEPRESSURIZATION
127	1.28E-11	4.64E-04	%M5O_LOPP-H345	LOSS OF PREFERRED POWER - MODE 5O - H345
		1.72E-06	E50-UV_-CC-EQU_ALL	CCF of all components in group 'E50-UV_-CC-EQU'
		1.00E+00	FL_M5O-LOPP009	Sequence tag for M5O-LOPP009
		1.61E-02	XXX-XHE-FO-LPMAKEUP	OP. FAILS TO RECOG. NEED FOR LOW PRESS. MAKEUP AFTER DEPRESSURIZATION
128	1.23E-11	8.36E-04	%M5_LOPP-H345	LOSS OF PREFERRED POWER - MODE 5 - H345
		3.84E-02	B32-TM-LOOPA-IND	ICS LOOP A IN TEST OR MAINTENANCE BY ITSELF
		2.38E-05	E50-SQV-CC-INJ_1_5	CCF of two components: E50-SQV-CC-INJ-F002A & E50-SQV-CC-INJ-F002E
		1.00E+00	FL_M5-LOPP010	Sequence tag for M5-LOPP010
		1.61E-02	XXX-XHE-FO-LPMAKEUP	OP. FAILS TO RECOG. NEED FOR LOW PRESS. MAKEUP AFTER DEPRESSURIZATION

Table 14.6-3

High Wind Shutdown Cutset Report

CDF = 3.95E-08/yr
Top 200 Cutsets

129	1.23E-11	8.36E-04	%M5_LOPP-H345	LOSS OF PREFERRED POWER - MODE 5 - H345
		3.84E-02	B32-TM-LOOPA-IND	ICS LOOP A IN TEST OR MAINTENANCE BY ITSELF
		2.38E-05	E50-SQV-CC-INJ_4_8	CCF of two components: E50-SQV-CC-INJ-F002D & E50-SQV-CC-INJ-F002H
		1.00E+00	FL_M5-LOPP010	Sequence tag for M5-LOPP010
		1.61E-02	XXX-XHE-FO-LPMAKEUP	OP. FAILS TO RECOG. NEED FOR LOW PRESS. MAKEUP AFTER DEPRESSURIZATION
130	1.23E-11	8.36E-04	%M5_LOPP-H345	LOSS OF PREFERRED POWER - MODE 5 - H345
		3.84E-02	B32-TM-LOOPB-IND	ICS LOOP B IN TEST OR MAINTENANCE BY ITSELF
		2.38E-05	E50-SQV-CC-INJ_1_5	CCF of two components: E50-SQV-CC-INJ-F002A & E50-SQV-CC-INJ-F002E
		1.00E+00	FL_M5-LOPP010	Sequence tag for M5-LOPP010
		1.61E-02	XXX-XHE-FO-LPMAKEUP	OP. FAILS TO RECOG. NEED FOR LOW PRESS. MAKEUP AFTER DEPRESSURIZATION
131	1.23E-11	8.36E-04	%M5_LOPP-H345	LOSS OF PREFERRED POWER - MODE 5 - H345
		3.84E-02	B32-TM-LOOPB-IND	ICS LOOP B IN TEST OR MAINTENANCE BY ITSELF
		2.38E-05	E50-SQV-CC-INJ_4_8	CCF of two components: E50-SQV-CC-INJ-F002D & E50-SQV-CC-INJ-F002H
		1.00E+00	FL_M5-LOPP010	Sequence tag for M5-LOPP010
		1.61E-02	XXX-XHE-FO-LPMAKEUP	OP. FAILS TO RECOG. NEED FOR LOW PRESS. MAKEUP AFTER DEPRESSURIZATION
132	1.22E-11	4.64E-04	%M5O_LOPP-H345	LOSS OF PREFERRED POWER - MODE 5O - H345
		1.00E-04	B21-UV_-CC-F102A	CHECK VALVE F102A FAILS TO OPEN
		2.63E-04	E50-BV_-OC-F004A	MAINTENANCE VALVE F004A PLUGS/TRANSFERS CLOSED
		1.00E+00	FL_M5O-LOPP009	Sequence tag for M5O-LOPP009

Table 14.6-3

High Wind Shutdown Cutset Report

CDF = 3.95E-08/yr
Top 200 Cutsets

133	1.22E-11	4.64E-04	%M5O_LOPP-H345	LOSS OF PREFERRED POWER - MODE 5O - H345
		1.00E-04	B21-UV_-CC-F102A	CHECK VALVE F102A FAILS TO OPEN
		2.63E-04	E50-BV_-OC-F004D	MAINTENANCE VALVE F004D PLUGS/TRANSFERS CLOSED
		1.00E+00	FL_M5O-LOPP009	Sequence tag for M5O-LOPP009
134	1.22E-11	4.64E-04	%M5O_LOPP-H345	LOSS OF PREFERRED POWER - MODE 5O - H345
		1.00E-04	B21-UV_-CC-F111A	CHECK VALVE F111A FAILS TO OPEN
		2.63E-04	E50-BV_-OC-F004A	MAINTENANCE VALVE F004A PLUGS/TRANSFERS CLOSED
		1.00E+00	FL_M5O-LOPP009	Sequence tag for M5O-LOPP009
135	1.22E-11	4.64E-04	%M5O_LOPP-H345	LOSS OF PREFERRED POWER - MODE 5O - H345
		1.00E-04	B21-UV_-CC-F111A	CHECK VALVE F111A FAILS TO OPEN
		2.63E-04	E50-BV_-OC-F004D	MAINTENANCE VALVE F004D PLUGS/TRANSFERS CLOSED
		1.00E+00	FL_M5O-LOPP009	Sequence tag for M5O-LOPP009
136	1.12E-11	4.64E-04	%M5O_LOPP-H345	LOSS OF PREFERRED POWER - MODE 5O - H345
		3.00E-05	C63-DTM-FC-ESFLG_ALL	CCF of all components in group 'C63-DTM-FC-ESFLG'
		1.00E+00	FL_M5O-LOPP014	Sequence tag for M5O-LOPP014
		5.00E-02	MS-TOP2	TWO DPVs FAIL TO OPEN (MANUAL)
		1.61E-02	XXX-XHE-FO-LPMAKEUP	OP. FAILS TO RECOG. NEED FOR LOW PRESS. MAKEUP AFTER DEPRESSURIZATION

Table 14.6-3

High Wind Shutdown Cutset Report

CDF = 3.95E-08/yr
Top 200 Cutsets

137	1.11E-11	8.36E-04	%M5_LOPP-H345	LOSS OF PREFERRED POWER - MODE 5 - H345
		3.00E-05	C63-DTM-FC-ESFLG_ALL	CCF of all components in group 'C63-DTM-FC-ESFLG'
		1.00E+00	FL_M5-LOPP010	Sequence tag for M5-LOPP010
		4.44E-04	G21-MOV-CC-2_1_2	CCF of two components: G21-MOV-CC-F332A & G21-MOV-CC-F332B
138	1.11E-11	8.36E-04	%M5_LOPP-H345	LOSS OF PREFERRED POWER - MODE 5 - H345
		3.00E-05	C63-DTM-FC-ESFLG_ALL	CCF of all components in group 'C63-DTM-FC-ESFLG'
		1.00E+00	FL_M5-LOPP011	Sequence tag for M5-LOPP011
		4.44E-04	G21-MOV-CC-2_1_2	CCF of two components: G21-MOV-CC-F332A & G21-MOV-CC-F332B
139	9.88E-12	4.64E-04	%M5O_LOPP-H345	LOSS OF PREFERRED POWER - MODE 5O - H345
		3.00E-04	E50-SQV-CC-EQU_ALL	CCF of all components in group 'E50-SQV-CC-EQU'
		1.00E+00	FL_M5O-LOPP009	Sequence tag for M5O-LOPP009
		4.41E-03	R21-DG_-FR-CCF_1_2	CCF of two components: R21-DG_-FR-DGA & R21-DG_-FR-DGB
		1.61E-02	R21-XHE-FO-ADG	OPERATOR FAILS TO CONTROL THE LOADS ON ANCILLARY DG BUSES
140	8.89E-12	4.64E-04	%M5O_LOPP-H345	LOSS OF PREFERRED POWER - MODE 5O - H345
		2.38E-05	E50-SQV-CC-INJ_1_5	CCF of two components: E50-SQV-CC-INJ-F002A & E50-SQV-CC-INJ-F002E
		1.00E+00	FL_M5O-LOPP014	Sequence tag for M5O-LOPP014
		5.00E-02	MS-TOP2	TWO DPVs FAIL TO OPEN (MANUAL)
		1.61E-02	XXX-XHE-FO-LPMAKEUP	OP. FAILS TO RECOG. NEED FOR LOW PRESS. MAKEUP AFTER DEPRESSURIZATION

Table 14.6-3

High Wind Shutdown Cutset Report

CDF = 3.95E-08/yr
Top 200 Cutsets

141	8.89E-12	4.64E-04	%M5O_LOPP-H345	LOSS OF PREFERRED POWER - MODE 5O - H345
		2.38E-05	E50-SQV-CC-INJ_4_8	CCF of two components: E50-SQV-CC-INJ-F002D & E50-SQV-CC-INJ-F002H
		1.00E+00	FL_M5O-LOPP014	Sequence tag for M5O-LOPP014
		5.00E-02	MS-TOP2	TWO DPVs FAIL TO OPEN (MANUAL)
		1.61E-02	XXX-XHE-FO-LPMAKEUP	OP. FAILS TO RECOG. NEED FOR LOW PRESS. MAKEUP AFTER DEPRESSURIZATION
142	8.87E-12	8.36E-04	%M5_LOPP-H345	LOSS OF PREFERRED POWER - MODE 5 - H345
		3.84E-02	B32-TM-LOOPA-IND	ICS LOOP A IN TEST OR MAINTENANCE BY ITSELF
		1.72E-05	E50-UV_-CC-INJ_ALL	CCF of all components in group 'E50-UV_-CC-INJ'
		1.00E+00	FL_M5-LOPP010	Sequence tag for M5-LOPP010
		1.61E-02	XXX-XHE-FO-LPMAKEUP	OP. FAILS TO RECOG. NEED FOR LOW PRESS. MAKEUP AFTER DEPRESSURIZATION
143	8.87E-12	8.36E-04	%M5_LOPP-H345	LOSS OF PREFERRED POWER - MODE 5 - H345
		3.84E-02	B32-TM-LOOPB-IND	ICS LOOP B IN TEST OR MAINTENANCE BY ITSELF
		1.72E-05	E50-UV_-CC-INJ_ALL	CCF of all components in group 'E50-UV_-CC-INJ'
		1.00E+00	FL_M5-LOPP010	Sequence tag for M5-LOPP010
		1.61E-02	XXX-XHE-FO-LPMAKEUP	OP. FAILS TO RECOG. NEED FOR LOW PRESS. MAKEUP AFTER DEPRESSURIZATION

Table 14.6-3

High Wind Shutdown Cutset Report

CDF = 3.95E-08/yr
Top 200 Cutsets

144	8.65E-12	4.64E-04	%M5O_LOPP-H345	LOSS OF PREFERRED POWER - MODE 5O - H345
		2.63E-04	E50-BV_-OC-F004A	MAINTENANCE VALVE F004A PLUGS/TRANSFERS CLOSED
		1.00E+00	FL_M5O-LOPP009	Sequence tag for M5O-LOPP009
		4.41E-03	R21-DG_-FR-CCF_1_2	CCF of two components: R21-DG_-FR-DGA & R21-DG_-FR-DGB
		1.61E-02	R21-XHE-FO-ADG	OPERATOR FAILS TO CONTROL THE LOADS ON ANCILLARY DG BUSES
145	8.65E-12	4.64E-04	%M5O_LOPP-H345	LOSS OF PREFERRED POWER - MODE 5O - H345
		2.63E-04	E50-BV_-OC-F004D	MAINTENANCE VALVE F004D PLUGS/TRANSFERS CLOSED
		1.00E+00	FL_M5O-LOPP009	Sequence tag for M5O-LOPP009
		4.41E-03	R21-DG_-FR-CCF_1_2	CCF of two components: R21-DG_-FR-DGA & R21-DG_-FR-DGB
		1.61E-02	R21-XHE-FO-ADG	OPERATOR FAILS TO CONTROL THE LOADS ON ANCILLARY DG BUSES
146	8.59E-12	8.36E-04	%M5_LOPP-H345	LOSS OF PREFERRED POWER - MODE 5 - H345
		1.50E-04	B21-SQV-CC_ALL	CCF of all components in group 'B21-SQV-CC'
		1.37E-03	B32-TM-LOOPA-MULT	ICS LOOP A IN TEST OR MAINTENANCE, MULTIPLE LOOPS
		1.00E+00	FL_M5-LOPP016	Sequence tag for M5-LOPP016
		5.00E-02	MS-TOP2	TWO DPVs FAIL TO OPEN (MANUAL)
147	8.59E-12	8.36E-04	%M5_LOPP-H345	LOSS OF PREFERRED POWER - MODE 5 - H345
		1.50E-04	B21-SQV-CC_ALL	CCF of all components in group 'B21-SQV-CC'
		1.37E-03	B32-TM-LOOPB-MULT	ICS LOOP B IN TEST OR MAINTENANCE, MULTIPLE LOOPS
		1.00E+00	FL_M5-LOPP016	Sequence tag for M5-LOPP016
		5.00E-02	MS-TOP2	TWO DPVs FAIL TO OPEN (MANUAL)

Table 14.6-3

High Wind Shutdown Cutset Report

CDF = 3.95E-08/yr
Top 200 Cutsets

148	8.36E-12	8.36E-04	%M5_LOPP-H345	LOSS OF PREFERRED POWER - MODE 5 - H345
		1.00E-04	B21-UV_-CC-F102A	CHECK VALVE F102A FAILS TO OPEN
		1.00E-04	C63-CCFSOFTWARE	Common cause failure of software
		1.00E+00	FL_M5-LOPP010	Sequence tag for M5-LOPP010
149	8.36E-12	8.36E-04	%M5_LOPP-H345	LOSS OF PREFERRED POWER - MODE 5 - H345
		1.00E-04	B21-UV_-CC-F102A	CHECK VALVE F102A FAILS TO OPEN
		1.00E-04	C63-CCFSOFTWARE	Common cause failure of software
		1.00E+00	FL_M5-LOPP011	Sequence tag for M5-LOPP011
150	8.36E-12	8.36E-04	%M5_LOPP-H345	LOSS OF PREFERRED POWER - MODE 5 - H345
		1.00E-04	B21-UV_-CC-F111A	CHECK VALVE F111A FAILS TO OPEN
		1.00E-04	C63-CCFSOFTWARE	Common cause failure of software
		1.00E+00	FL_M5-LOPP010	Sequence tag for M5-LOPP010
151	8.36E-12	8.36E-04	%M5_LOPP-H345	LOSS OF PREFERRED POWER - MODE 5 - H345
		1.00E-04	B21-UV_-CC-F111A	CHECK VALVE F111A FAILS TO OPEN
		1.00E-04	C63-CCFSOFTWARE	Common cause failure of software
		1.00E+00	FL_M5-LOPP011	Sequence tag for M5-LOPP011
152	8.35E-12	4.64E-04	%M5O_LOPP-H345	LOSS OF PREFERRED POWER - MODE 5O - H345
		3.60E-07	C63-PSP-FO-ESFEP_ALL	CCF of all components in group 'C63-PSP-FO-ESFEP'
		1.00E+00	FL_M5O-LOPP015	Sequence tag for M5O-LOPP015
		5.00E-02	MS-TOP2	TWO DPVs FAIL TO OPEN (MANUAL)

Table 14.6-3

High Wind Shutdown Cutset Report

CDF = 3.95E-08/yr
Top 200 Cutsets

153	8.30E-12	4.64E-04	%M5O_LOPP-H345	LOSS OF PREFERRED POWER - MODE 5O - H345
		1.11E-06	C63-DTM-FC-ESFLG_1_2_3	CCF of three components: C63-DTM-FC-ESFD1 & C63-DTM-FC-ESFD2 & C63-DTM-FC-ESFD3
		1.00E+00	FL_M5O-LOPP009	Sequence tag for M5O-LOPP009
		1.61E-02	XXX-XHE-FO-LPMAKEUP	OP. FAILS TO RECOG. NEED FOR LOW PRESS. MAKEUP AFTER DEPRESSURIZATION
154	8.30E-12	4.64E-04	%M5O_LOPP-H345	LOSS OF PREFERRED POWER - MODE 5O - H345
		1.11E-06	C63-DTM-FC-ESFLG_1_2_3	CCF of three components: C63-DTM-FC-ESFD1 & C63-DTM-FC-ESFD2 & C63-DTM-FC-ESFD3
		1.00E+00	FL_M5O-LOPP010	Sequence tag for M5O-LOPP010
		1.61E-02	XXX-XHE-FO-LPMAKEUP	OP. FAILS TO RECOG. NEED FOR LOW PRESS. MAKEUP AFTER DEPRESSURIZATION
155	8.30E-12	4.64E-04	%M5O_LOPP-H345	LOSS OF PREFERRED POWER - MODE 5O - H345
		1.11E-06	C63-DTM-FC-ESFLG_1_2_4	CCF of three components: C63-DTM-FC-ESFD1 & C63-DTM-FC-ESFD2 & C63-DTM-FC-ESFD4
		1.00E+00	FL_M5O-LOPP009	Sequence tag for M5O-LOPP009
		1.61E-02	XXX-XHE-FO-LPMAKEUP	OP. FAILS TO RECOG. NEED FOR LOW PRESS. MAKEUP AFTER DEPRESSURIZATION

Table 14.6-3

High Wind Shutdown Cutset Report

CDF = 3.95E-08/yr
Top 200 Cutsets

156	8.30E-12	4.64E-04	%M5O_LOPP-H345	LOSS OF PREFERRED POWER - MODE 5O - H345
		1.11E-06	C63-DTM-FC-ESFLG_1_2_4	CCF of three components: C63-DTM-FC-ESFD1 & C63-DTM-FC-ESFD2 & C63-DTM-FC-ESFD4
		1.00E+00	FL_M5O-LOPP010	Sequence tag for M5O-LOPP010
		1.61E-02	XXX-XHE-FO-LPMAKEUP	OP. FAILS TO RECOG. NEED FOR LOW PRESS. MAKEUP AFTER DEPRESSURIZATION
157	8.30E-12	4.64E-04	%M5O_LOPP-H345	LOSS OF PREFERRED POWER - MODE 5O - H345
		1.11E-06	C63-DTM-FC-ESFLG_1_3_4	CCF of three components: C63-DTM-FC-ESFD1 & C63-DTM-FC-ESFD3 & C63-DTM-FC-ESFD4
		1.00E+00	FL_M5O-LOPP009	Sequence tag for M5O-LOPP009
		1.61E-02	XXX-XHE-FO-LPMAKEUP	OP. FAILS TO RECOG. NEED FOR LOW PRESS. MAKEUP AFTER DEPRESSURIZATION
158	8.30E-12	4.64E-04	%M5O_LOPP-H345	LOSS OF PREFERRED POWER - MODE 5O - H345
		1.11E-06	C63-DTM-FC-ESFLG_1_3_4	CCF of three components: C63-DTM-FC-ESFD1 & C63-DTM-FC-ESFD3 & C63-DTM-FC-ESFD4
		1.00E+00	FL_M5O-LOPP010	Sequence tag for M5O-LOPP010
		1.61E-02	XXX-XHE-FO-LPMAKEUP	OP. FAILS TO RECOG. NEED FOR LOW PRESS. MAKEUP AFTER DEPRESSURIZATION

Table 14.6-3

High Wind Shutdown Cutset Report

CDF = 3.95E-08/yr
Top 200 Cutsets

159	8.30E-12	4.64E-04	%M5O_LOPP-H345	LOSS OF PREFERRED POWER - MODE 5O - H345
		1.11E-06	C63-DTM-FC-ESFLG_2_3_4	CCF of three components: C63-DTM-FC-ESFD2 & C63-DTM-FC-ESFD3 & C63-DTM-FC-ESFD4
		1.00E+00	FL_M5O-LOPP009	Sequence tag for M5O-LOPP009
		1.61E-02	XXX-XHE-FO-LPMAKEUP	OP. FAILS TO RECOG. NEED FOR LOW PRESS. MAKEUP AFTER DEPRESSURIZATION
160	8.30E-12	4.64E-04	%M5O_LOPP-H345	LOSS OF PREFERRED POWER - MODE 5O - H345
		1.11E-06	C63-DTM-FC-ESFLG_2_3_4	CCF of three components: C63-DTM-FC-ESFD2 & C63-DTM-FC-ESFD3 & C63-DTM-FC-ESFD4
		1.00E+00	FL_M5O-LOPP010	Sequence tag for M5O-LOPP010
		1.61E-02	XXX-XHE-FO-LPMAKEUP	OP. FAILS TO RECOG. NEED FOR LOW PRESS. MAKEUP AFTER DEPRESSURIZATION
161	7.75E-12	8.36E-04	%M5_LOPP-H345	LOSS OF PREFERRED POWER - MODE 5 - H345
		3.84E-02	B32-TM-LOOPA-IND	ICS LOOP A IN TEST OR MAINTENANCE BY ITSELF
		3.00E-04	E50-SQV-CC-EQU_ALL	CCF of all components in group 'E50-SQV-CC-EQU'
		1.00E+00	FL_M5-LOPP016	Sequence tag for M5-LOPP016
		5.00E-02	MS-TOP2	TWO DPVs FAIL TO OPEN (MANUAL)
		1.61E-02	XXX-XHE-FO-LPMAKEUP	OP. FAILS TO RECOG. NEED FOR LOW PRESS. MAKEUP AFTER DEPRESSURIZATION

Table 14.6-3

High Wind Shutdown Cutset Report

CDF = 3.95E-08/yr
Top 200 Cutsets

162	7.75E-12	8.36E-04	%M5_LOPP-H345	LOSS OF PREFERRED POWER - MODE 5 - H345
		3.84E-02	B32-TM-LOOPB-IND	ICS LOOP B IN TEST OR MAINTENANCE BY ITSELF
		3.00E-04	E50-SQV-CC-EQU_ALL	CCF of all components in group 'E50-SQV-CC-EQU'
		1.00E+00	FL_M5-LOPP016	Sequence tag for M5-LOPP016
		5.00E-02	MS-TOP2	TWO DPVs FAIL TO OPEN (MANUAL)
		1.61E-02	XXX-XHE-FO-LPMAKEUP	OP. FAILS TO RECOG. NEED FOR LOW PRESS. MAKEUP AFTER DEPRESSURIZATION
163	7.47E-12	4.64E-04	%M5O_LOPP-H345	LOSS OF PREFERRED POWER - MODE 5O - H345
		1.00E-03	E50-UV_-CC-INJ-F003A	INJECTION CHECK VALVE F003A FAILS TO OPEN
		1.00E-03	E50-UV_-CC-INJ-F003E	INJECTION CHECK VALVE F003E FAILS TO OPEN
		1.00E+00	FL_M5O-LOPP009	Sequence tag for M5O-LOPP009
		1.61E-02	XXX-XHE-FO-LPMAKEUP	OP. FAILS TO RECOG. NEED FOR LOW PRESS. MAKEUP AFTER DEPRESSURIZATION
164	7.47E-12	4.64E-04	%M5O_LOPP-H345	LOSS OF PREFERRED POWER - MODE 5O - H345
		1.00E-03	E50-UV_-CC-INJ-F003D	INJECTION CHECK VALVE F003D FAILS TO OPEN
		1.00E-03	E50-UV_-CC-INJ-F003H	INJECTION CHECK VALVE F003H FAILS TO OPEN
		1.00E+00	FL_M5O-LOPP009	Sequence tag for M5O-LOPP009
		1.61E-02	XXX-XHE-FO-LPMAKEUP	OP. FAILS TO RECOG. NEED FOR LOW PRESS. MAKEUP AFTER DEPRESSURIZATION

Table 14.6-3

High Wind Shutdown Cutset Report

CDF = 3.95E-08/yr
Top 200 Cutsets

165	7.02E-12	4.64E-04	%M5O_LOPP-H345	LOSS OF PREFERRED POWER - MODE 5O - H345
		3.00E-04	E50-SQV-CC-EQU_ALL	CCF of all components in group 'E50-SQV-CC-EQU'
		1.00E+00	FL_M5O-LOPP009	Sequence tag for M5O-LOPP009
		5.60E-02	R21-DG_-FR-DGA	DIESEL GENERATOR "A" FAILS TO RUN GIVEN START
		5.60E-02	R21-DG_-FR-DGB	DIESEL GENERATOR "B" FAILS TO RUN GIVEN START
		1.61E-02	R21-XHE-FO-ADG	OPERATOR FAILS TO CONTROL THE LOADS ON ANCILLARY DG BUSES
166	6.96E-12	4.64E-04	%M5O_LOPP-H345	LOSS OF PREFERRED POWER - MODE 5O - H345
		1.50E-04	B21-SQV-CC_ALL	CCF of all components in group 'B21-SQV-CC'
		1.00E-04	B21-UV_-CC-F102A	CHECK VALVE F102A FAILS TO OPEN
		1.00E+00	FL_M5O-LOPP010	Sequence tag for M5O-LOPP010
167	6.96E-12	4.64E-04	%M5O_LOPP-H345	LOSS OF PREFERRED POWER - MODE 5O - H345
		1.50E-04	B21-SQV-CC_ALL	CCF of all components in group 'B21-SQV-CC'
		1.00E-04	B21-UV_-CC-F111A	CHECK VALVE F111A FAILS TO OPEN
		1.00E+00	FL_M5O-LOPP010	Sequence tag for M5O-LOPP010
168	6.96E-12	4.64E-04	%M5O_LOPP-H345	LOSS OF PREFERRED POWER - MODE 5O - H345
		1.00E-04	B21-UV_-CC-F102A	CHECK VALVE F102A FAILS TO OPEN
		1.50E-04	E50-SQV-CC-INJ_ALL	CCF of all components in group 'E50-SQV-CC-INJ'
		1.00E+00	FL_M5O-LOPP009	Sequence tag for M5O-LOPP009

Table 14.6-3

High Wind Shutdown Cutset Report

CDF = 3.95E-08/yr
Top 200 Cutsets

169	6.96E-12	4.64E-04	%M5O_LOPP-H345	LOSS OF PREFERRED POWER - MODE 5O - H345
		1.00E-04	B21-UV_-CC-F111A	CHECK VALVE F111A FAILS TO OPEN
		1.50E-04	E50-SQV-CC-INJ_ALL	CCF of all components in group 'E50-SQV-CC-INJ'
		1.00E+00	FL_M5O-LOPP009	Sequence tag for M5O-LOPP009
170	6.79E-12	8.36E-04	%M5_LOPP-H345	LOSS OF PREFERRED POWER - MODE 5 - H345
		3.84E-02	B32-TM-LOOPA-IND	ICS LOOP A IN TEST OR MAINTENANCE BY ITSELF
		2.63E-04	E50-BV_-OC-F004A	MAINTENANCE VALVE F004A PLUGS/TRANSFERS CLOSED
		1.00E+00	FL_M5-LOPP016	Sequence tag for M5-LOPP016
		5.00E-02	MS-TOP2	TWO DPVs FAIL TO OPEN (MANUAL)
		1.61E-02	XXX-XHE-FO-LPMAKEUP	OP. FAILS TO RECOG. NEED FOR LOW PRESS. MAKEUP AFTER DEPRESSURIZATION
171	6.79E-12	8.36E-04	%M5_LOPP-H345	LOSS OF PREFERRED POWER - MODE 5 - H345
		3.84E-02	B32-TM-LOOPA-IND	ICS LOOP A IN TEST OR MAINTENANCE BY ITSELF
		2.63E-04	E50-BV_-OC-F004D	MAINTENANCE VALVE F004D PLUGS/TRANSFERS CLOSED
		1.00E+00	FL_M5-LOPP016	Sequence tag for M5-LOPP016
		5.00E-02	MS-TOP2	TWO DPVs FAIL TO OPEN (MANUAL)
		1.61E-02	XXX-XHE-FO-LPMAKEUP	OP. FAILS TO RECOG. NEED FOR LOW PRESS. MAKEUP AFTER DEPRESSURIZATION

Table 14.6-3

High Wind Shutdown Cutset Report

CDF = 3.95E-08/yr
Top 200 Cutsets

172	6.79E-12	8.36E-04	%M5_LOPP-H345	LOSS OF PREFERRED POWER - MODE 5 - H345
		3.84E-02	B32-TM-LOOPB-IND	ICS LOOP B IN TEST OR MAINTENANCE BY ITSELF
		2.63E-04	E50-BV_-OC-F004A	MAINTENANCE VALVE F004A PLUGS/TRANSFERS CLOSED
		1.00E+00	FL_M5-LOPP016	Sequence tag for M5-LOPP016
		5.00E-02	MS-TOP2	TWO DPVs FAIL TO OPEN (MANUAL)
		1.61E-02	XXX-XHE-FO-LPMAKEUP	OP. FAILS TO RECOG. NEED FOR LOW PRESS. MAKEUP AFTER DEPRESSURIZATION
173	6.79E-12	8.36E-04	%M5_LOPP-H345	LOSS OF PREFERRED POWER - MODE 5 - H345
		3.84E-02	B32-TM-LOOPB-IND	ICS LOOP B IN TEST OR MAINTENANCE BY ITSELF
		2.63E-04	E50-BV_-OC-F004D	MAINTENANCE VALVE F004D PLUGS/TRANSFERS CLOSED
		1.00E+00	FL_M5-LOPP016	Sequence tag for M5-LOPP016
		5.00E-02	MS-TOP2	TWO DPVs FAIL TO OPEN (MANUAL)
		1.61E-02	XXX-XHE-FO-LPMAKEUP	OP. FAILS TO RECOG. NEED FOR LOW PRESS. MAKEUP AFTER DEPRESSURIZATION
170	6.79E-12	8.36E-04	%M5_LOPP-H345	LOSS OF PREFERRED POWER - MODE 5 - H345
		3.84E-02	B32-TM-LOOPA-IND	ICS LOOP A IN TEST OR MAINTENANCE BY ITSELF
		2.63E-04	E50-BV_-OC-F004A	MAINTENANCE VALVE F004A PLUGS/TRANSFERS CLOSED
		1.00E+00	FL_M5-LOPP016	Sequence tag for M5-LOPP016
		5.00E-02	MS-TOP2	TWO DPVs FAIL TO OPEN (MANUAL)
		1.61E-02	XXX-XHE-FO-LPMAKEUP	OP. FAILS TO RECOG. NEED FOR LOW PRESS. MAKEUP AFTER DEPRESSURIZATION

Table 14.6-3

High Wind Shutdown Cutset Report

CDF = 3.95E-08/yr
Top 200 Cutsets

174	6.72E-12	4.64E-04	%M5O_LOPP-H345	LOSS OF PREFERRED POWER - MODE 5O - H345
		1.80E-05	C63-LOG-FC-ESFLG_ALL	CCF of all components in group 'C63-LOG-FC-ESFLG'
		1.00E+00	FL_M5O-LOPP014	Sequence tag for M5O-LOPP014
		5.00E-02	MS-TOP2	TWO DPVs FAIL TO OPEN (MANUAL)
		1.61E-02	XXX-XHE-FO-LPMAKEUP	OP. FAILS TO RECOG. NEED FOR LOW PRESS. MAKEUP AFTER DEPRESSURIZATION
175	6.69E-12	8.36E-04	%M5_LOPP-H345	LOSS OF PREFERRED POWER - MODE 5 - H345
		1.80E-05	C63-LOG-FC-ESFLG_ALL	CCF of all components in group 'C63-LOG-FC-ESFLG'
		1.00E+00	FL_M5-LOPP010	Sequence tag for M5-LOPP010
		4.44E-04	G21-MOV-CC-2_1_2	CCF of two components: G21-MOV-CC-F332A & G21-MOV-CC-F332B
176	6.69E-12	8.36E-04	%M5_LOPP-H345	LOSS OF PREFERRED POWER - MODE 5 - H345
		1.80E-05	C63-LOG-FC-ESFLG_ALL	CCF of all components in group 'C63-LOG-FC-ESFLG'
		1.00E+00	FL_M5-LOPP011	Sequence tag for M5-LOPP011
		4.44E-04	G21-MOV-CC-2_1_2	CCF of two components: G21-MOV-CC-F332A & G21-MOV-CC-F332B
177	6.68E-12	4.64E-04	%M5O_LOPP-H345	LOSS OF PREFERRED POWER - MODE 5O - H345
		1.00E+00	FL_M5O-LOPP009	Sequence tag for M5O-LOPP009
		2.00E-03	G21-MP_-FS-PLP	MOTOR-DRIVEN LPI PUMP FAILS TO START
		7.20E-06	T23-POL-RP-SP	SUPPRESSION POOL LEAKS CATASTROPHICALLY

Table 14.6-3

High Wind Shutdown Cutset Report

CDF = 3.95E-08/yr
Top 200 Cutsets

178	6.41E-12	4.64E-04	%M5O_LOPP-H345	LOSS OF PREFERRED POWER - MODE 5O - H345
		1.72E-05	E50-UV_-CC-INJ_ALL	CCF of all components in group 'E50-UV_-CC-INJ'
		1.00E+00	FL_M5O-LOPP014	Sequence tag for M5O-LOPP014
		5.00E-02	MS-TOP2	TWO DPVs FAIL TO OPEN (MANUAL)
		1.61E-02	XXX-XHE-FO-LPMAKEUP	OP. FAILS TO RECOG. NEED FOR LOW PRESS. MAKEUP AFTER DEPRESSURIZATION
179	6.20E-12	8.36E-04	%M5_LOPP-H345	LOSS OF PREFERRED POWER - MODE 5 - H345
		3.84E-02	B32-TM-LOOPA-IND	ICS LOOP A IN TEST OR MAINTENANCE BY ITSELF
		1.00E+00	FL_M5-LOPP010	Sequence tag for M5-LOPP010
		1.61E-02	XXX-XHE-FO-LPMAKEUP	OP. FAILS TO RECOG. NEED FOR LOW PRESS. MAKEUP AFTER DEPRESSURIZATION
180	6.20E-12	8.36E-04	%M5_LOPP-H345	LOSS OF PREFERRED POWER - MODE 5 - H345
		3.84E-02	B32-TM-LOOPB-IND	ICS LOOP B IN TEST OR MAINTENANCE BY ITSELF
		1.20E-05	E50-STR-PG_ALL	CCF of all components in group 'E50-STR-PG'
		1.00E+00	FL_M5-LOPP010	Sequence tag for M5-LOPP010
		1.61E-02	XXX-XHE-FO-LPMAKEUP	OP. FAILS TO RECOG. NEED FOR LOW PRESS. MAKEUP AFTER DEPRESSURIZATION
181	6.19E-12	4.64E-04	%M5O_LOPP-H345	LOSS OF PREFERRED POWER - MODE 5O - H345
		3.00E-05	C63-DTM-FC-ESFLG_ALL	CCF of all components in group 'C63-DTM-FC-ESFLG'
		1.00E+00	FL_M5O-LOPP009	Sequence tag for M5O-LOPP009
		4.44E-04	G21-MOV-CC-2_1_2	CCF of two components: G21-MOV-CC-F332A & G21-MOV-CC-F332B

Table 14.6-3

High Wind Shutdown Cutset Report

CDF = 3.95E-08/yr
Top 200 Cutsets

182	6.19E-12	4.64E-04	%M5O_LOPP-H345	LOSS OF PREFERRED POWER - MODE 5O - H345
		3.00E-05	C63-DTM-FC-ESFLG_ALL	CCF of all components in group 'C63-DTM-FC-ESFLG'
		1.00E+00	FL_M5O-LOPP010	Sequence tag for M5O-LOPP010
		4.44E-04	G21-MOV-CC-2_1_2	CCF of two components: G21-MOV-CC-F332A & G21-MOV-CC-F332B
183	6.15E-12	4.64E-04	%M5O_LOPP-H345	LOSS OF PREFERRED POWER - MODE 5O - H345
		2.63E-04	E50-BV_-OC-F004A	MAINTENANCE VALVE F004A PLUGS/TRANSFERS CLOSED
		1.00E+00	FL_M5O-LOPP009	Sequence tag for M5O-LOPP009
		5.60E-02	R21-DG_-FR-DGA	DIESEL GENERATOR "A" FAILS TO RUN GIVEN START
		5.60E-02	R21-DG_-FR-DGB	DIESEL GENERATOR "B" FAILS TO RUN GIVEN START
		1.61E-02	R21-XHE-FO-ADG	OPERATOR FAILS TO CONTROL THE LOADS ON ANCILLARY DG BUSES
184	6.15E-12	4.64E-04	%M5O_LOPP-H345	LOSS OF PREFERRED POWER - MODE 5O - H345
		2.63E-04	E50-BV_-OC-F004D	MAINTENANCE VALVE F004D PLUGS/TRANSFERS CLOSED
		1.00E+00	FL_M5O-LOPP009	Sequence tag for M5O-LOPP009
		5.60E-02	R21-DG_-FR-DGA	DIESEL GENERATOR "A" FAILS TO RUN GIVEN START
		5.60E-02	R21-DG_-FR-DGB	DIESEL GENERATOR "B" FAILS TO RUN GIVEN START
		1.61E-02	R21-XHE-FO-ADG	OPERATOR FAILS TO CONTROL THE LOADS ON ANCILLARY DG BUSES

Table 14.6-3

High Wind Shutdown Cutset Report

CDF = 3.95E-08/yr
Top 200 Cutsets

185	6.08E-12	4.64E-04	%M5O_LOPP-H345	LOSS OF PREFERRED POWER - MODE 5O - H345
		1.00E+00	FL_M5O-LOPP009	Sequence tag for M5O-LOPP009
		8.14E-07	R16-BT_-LP-CCFSR_ALL	CCF of all components in group 'R16-BT_-LP-CCFSR'
		1.61E-02	XXX-XHE-FO-LPMAKEUP	OP. FAILS TO RECOG. NEED FOR LOW PRESS. MAKEUP AFTER DEPRESSURIZATION
186	6.08E-12	4.64E-04	%M5O_LOPP-H345	LOSS OF PREFERRED POWER - MODE 5O - H345
		1.00E+00	FL_M5O-LOPP010	Sequence tag for M5O-LOPP010
		8.14E-07	R16-BT_-LP-CCFSR_ALL	CCF of all components in group 'R16-BT_-LP-CCFSR'
		1.61E-02	XXX-XHE-FO-LPMAKEUP	OP. FAILS TO RECOG. NEED FOR LOW PRESS. MAKEUP AFTER DEPRESSURIZATION
187	5.99E-12	8.36E-04	%M5_LOPP-H345	LOSS OF PREFERRED POWER - MODE 5 - H345
		1.00E+00	B32-NONCONDENSE	Non condensable gasses form in ICS sufficiently to require venting
		1.76E-01	B32-XHE-FO-VENT	Operator fails to open vent
		1.00E+00	FL_M5-LOPP016	Sequence tag for M5-LOPP016
		5.00E-02	MS-TOP2	TWO DPVs FAIL TO OPEN (MANUAL)
		8.14E-07	R16-BT_-LP-CCFSR_ALL	CCF of all components in group 'R16-BT_-LP-CCFSR'

Table 14.6-3

High Wind Shutdown Cutset Report

CDF = 3.95E-08/yr
Top 200 Cutsets

188	5.93E-12	8.36E-04	%M5_LOPP-H345	LOSS OF PREFERRED POWER - MODE 5 - H345
		1.00E-04	C63-CCFSOFTWARE	Common cause failure of software
		1.00E+00	FL_M5-LOPP010	Sequence tag for M5-LOPP010
		4.41E-03	R21-DG_-FR-CCF_1_2	CCF of two components: R21-DG_-FR-DGA & R21-DG_-FR-DGB
		1.61E-02	R21-XHE-FO-ADG	OPERATOR FAILS TO CONTROL THE LOADS ON ANCILLARY DG BUSES
189	5.93E-12	8.36E-04	%M5_LOPP-H345	LOSS OF PREFERRED POWER - MODE 5 - H345
		1.00E-04	C63-CCFSOFTWARE	Common cause failure of software
		1.00E+00	FL_M5-LOPP011	Sequence tag for M5-LOPP011
		4.41E-03	R21-DG_-FR-CCF_1_2	CCF of two components: R21-DG_-FR-DGA & R21-DG_-FR-DGB
		1.61E-02	R21-XHE-FO-ADG	OPERATOR FAILS TO CONTROL THE LOADS ON ANCILLARY DG BUSES
190	5.93E-12	4.64E-04	%M5O_LOPP-H345	LOSS OF PREFERRED POWER - MODE 5O - H345
		7.94E-07	B21-SQV-CC_1_2_3	CCF of three components: B21-SQV-CC-F004A & B21-SQV-CC-F004B & B21-SQV-CC-F004C
		1.00E+00	FL_M5O-LOPP010	Sequence tag for M5O-LOPP010
		1.61E-02	XXX-XHE-FO-LPMAKEUP	OP. FAILS TO RECOG. NEED FOR LOW PRESS. MAKEUP AFTER DEPRESSURIZATION
191	5.93E-12	4.64E-04	%M5O_LOPP-H345	LOSS OF PREFERRED POWER - MODE 5O - H345
		7.94E-07	B21-SQV-CC_1_2_4	CCF of three components: B21-SQV-CC-F004A & B21-SQV-CC-F004B & B21-SQV-CC-F004D
		1.00E+00	FL_M5O-LOPP010	Sequence tag for M5O-LOPP010
		1.61E-02	XXX-XHE-FO-LPMAKEUP	OP. FAILS TO RECOG. NEED FOR LOW PRESS. MAKEUP AFTER DEPRESSURIZATION

Table 14.6-3

High Wind Shutdown Cutset Report

CDF = 3.95E-08/yr
Top 200 Cutsets

192	5.93E-12	4.64E-04	%M5O_LOPP-H345	LOSS OF PREFERRED POWER - MODE 5O - H345
		7.94E-07	B21-SQV-CC_1_2_5	CCF of three components: B21-SQV-CC-F004A & B21-SQV-CC-F004B & B21-SQV-CC-F004E
		1.00E+00	FL_M5O-LOPP010	Sequence tag for M5O-LOPP010
		1.61E-02	XXX-XHE-FO-LPMAKEUP	OP. FAILS TO RECOG. NEED FOR LOW PRESS. MAKEUP AFTER DEPRESSURIZATION
193	5.93E-12	4.64E-04	%M5O_LOPP-H345	LOSS OF PREFERRED POWER - MODE 5O - H345
		7.94E-07	B21-SQV-CC_1_2_6	CCF of three components: B21-SQV-CC-F004A & B21-SQV-CC-F004B & B21-SQV-CC-F004F
		1.00E+00	FL_M5O-LOPP010	Sequence tag for M5O-LOPP010
		1.61E-02	XXX-XHE-FO-LPMAKEUP	OP. FAILS TO RECOG. NEED FOR LOW PRESS. MAKEUP AFTER DEPRESSURIZATION
194	5.93E-12	4.64E-04	%M5O_LOPP-H345	LOSS OF PREFERRED POWER - MODE 5O - H345
		7.94E-07	B21-SQV-CC_1_3_4	CCF of three components: B21-SQV-CC-F004A & B21-SQV-CC-F004C & B21-SQV-CC-F004D
		1.00E+00	FL_M5O-LOPP010	Sequence tag for M5O-LOPP010
		1.61E-02	XXX-XHE-FO-LPMAKEUP	OP. FAILS TO RECOG. NEED FOR LOW PRESS. MAKEUP AFTER DEPRESSURIZATION

Table 14.6-3

High Wind Shutdown Cutset Report

CDF = 3.95E-08/yr
Top 200 Cutsets

195	5.93E-12	4.64E-04	%M5O_LOPP-H345	LOSS OF PREFERRED POWER - MODE 5O - H345
		7.94E-07	B21-SQV-CC_1_3_5	CCF of three components: B21-SQV-CC-F004A & B21-SQV-CC-F004C & B21-SQV-CC-F004E
		1.00E+00	FL_M5O-LOPP010	Sequence tag for M5O-LOPP010
		1.61E-02	XXX-XHE-FO-LPMAKEUP	OP. FAILS TO RECOG. NEED FOR LOW PRESS. MAKEUP AFTER DEPRESSURIZATION
196	5.93E-12	4.64E-04	%M5O_LOPP-H345	LOSS OF PREFERRED POWER - MODE 5O - H345
		7.94E-07	B21-SQV-CC_1_3_6	CCF of three components: B21-SQV-CC-F004A & B21-SQV-CC-F004C & B21-SQV-CC-F004F
		1.00E+00	FL_M5O-LOPP010	Sequence tag for M5O-LOPP010
		1.61E-02	XXX-XHE-FO-LPMAKEUP	OP. FAILS TO RECOG. NEED FOR LOW PRESS. MAKEUP AFTER DEPRESSURIZATION
197	5.93E-12	4.64E-04	%M5O_LOPP-H345	LOSS OF PREFERRED POWER - MODE 5O - H345
		7.94E-07	B21-SQV-CC_1_4_5	CCF of three components: B21-SQV-CC-F004A & B21-SQV-CC-F004D & B21-SQV-CC-F004E
		1.00E+00	FL_M5O-LOPP010	Sequence tag for M5O-LOPP010
		1.61E-02	XXX-XHE-FO-LPMAKEUP	OP. FAILS TO RECOG. NEED FOR LOW PRESS. MAKEUP AFTER DEPRESSURIZATION

Table 14.6-3

High Wind Shutdown Cutset Report

CDF = 3.95E-08/yr
Top 200 Cutsets

198	5.93E-12	4.64E-04	%M5O_LOPP-H345	LOSS OF PREFERRED POWER - MODE 5O - H345
		7.94E-07	B21-SQV-CC_1_4_6	CCF of three components: B21-SQV-CC-F004A & B21-SQV-CC-F004D & B21-SQV-CC-F004F
		1.00E+00	FL_M5O-LOPP010	Sequence tag for M5O-LOPP010
		1.61E-02	XXX-XHE-FO-LPMAKEUP	OP. FAILS TO RECOG. NEED FOR LOW PRESS. MAKEUP AFTER DEPRESSURIZATION
199	5.93E-12	4.64E-04	%M5O_LOPP-H345	LOSS OF PREFERRED POWER - MODE 5O - H345
		7.94E-07	B21-SQV-CC_1_5_6	CCF of three components: B21-SQV-CC-F004A & B21-SQV-CC-F004E & B21-SQV-CC-F004F
		1.00E+00	FL_M5O-LOPP010	Sequence tag for M5O-LOPP010
		1.61E-02	XXX-XHE-FO-LPMAKEUP	OP. FAILS TO RECOG. NEED FOR LOW PRESS. MAKEUP AFTER DEPRESSURIZATION
200	5.93E-12	4.64E-04	%M5O_LOPP-H345	LOSS OF PREFERRED POWER - MODE 5O - H345
		7.94E-07	B21-SQV-CC_2_3_4	CCF of three components: B21-SQV-CC-F004B & B21-SQV-CC-F004C & B21-SQV-CC-F004D
		1.00E+00	FL_M5O-LOPP010	Sequence tag for M5O-LOPP010
		1.61E-02	XXX-XHE-FO-LPMAKEUP	OP. FAILS TO RECOG. NEED FOR LOW PRESS. MAKEUP AFTER DEPRESSURIZATION

Table 14.6-4

High Wind At-Power Importance Measure Report

Core Damage Frequency = 8.51E-09

Event Name	Probability	Fus Ves	RAW	Description
B21-ACV-OC-F111A	2.40E-05	2.69E-05	2.1	AIR-TESTABLE CHECK VALVE F111A FAILS TO REMAIN OPEN
B21-SQV-CC_ALL	1.50E-04	1.15E-01	768.73	CCF of all components in group 'B21-SQV-CC'
B21-SRV-CC_ALL	5.85E-04	3.88E-04	1.66	CCF of all components in group 'B21-SRV-CC'
B21-SRV-OO-ANYSRV1	6.00E-03	1.34E-02	3.23	SAFETY/RELIEF VALVE FAILS TO RE-CLOSE
B21-SRV-OO-ANYSRV10	6.00E-03	1.34E-02	3.23	SAFETY/RELIEF VALVE FAILS TO RE-CLOSE
B21-SRV-OO-ANYSRV11	6.00E-03	1.34E-02	3.23	SAFETY/RELIEF VALVE FAILS TO RE-CLOSE
B21-SRV-OO-ANYSRV12	6.00E-03	1.34E-02	3.23	SAFETY/RELIEF VALVE FAILS TO RE-CLOSE
B21-SRV-OO-ANYSRV13	6.00E-03	1.34E-02	3.23	SAFETY/RELIEF VALVE FAILS TO RE-CLOSE
B21-SRV-OO-ANYSRV14	6.00E-03	1.34E-02	3.23	SAFETY/RELIEF VALVE FAILS TO RE-CLOSE
B21-SRV-OO-ANYSRV15	6.00E-03	1.34E-02	3.23	SAFETY/RELIEF VALVE FAILS TO RE-CLOSE
B21-SRV-OO-ANYSRV16	6.00E-03	1.34E-02	3.23	SAFETY/RELIEF VALVE FAILS TO RE-CLOSE
B21-SRV-OO-ANYSRV17	6.00E-03	1.34E-02	3.23	SAFETY/RELIEF VALVE FAILS TO RE-CLOSE
B21-SRV-OO-ANYSRV18	6.00E-03	1.34E-02	3.23	SAFETY/RELIEF VALVE FAILS TO RE-CLOSE
B21-SRV-OO-ANYSRV2	6.00E-03	1.34E-02	3.23	SAFETY/RELIEF VALVE FAILS TO RE-CLOSE
B21-SRV-OO-ANYSRV3	6.00E-03	1.34E-02	3.23	SAFETY/RELIEF VALVE FAILS TO RE-CLOSE
B21-SRV-OO-ANYSRV4	6.00E-03	1.34E-02	3.23	SAFETY/RELIEF VALVE FAILS TO RE-CLOSE
B21-SRV-OO-ANYSRV5	6.00E-03	1.34E-02	3.23	SAFETY/RELIEF VALVE FAILS TO RE-CLOSE
B21-SRV-OO-ANYSRV6	6.00E-03	1.34E-02	3.23	SAFETY/RELIEF VALVE FAILS TO RE-CLOSE

Table 14.6-4

High Wind At-Power Importance Measure Report

Core Damage Frequency = 8.51E-09

Event Name	Probability	Fus Ves	RAW	Description
B21-SRV-OO-ANYSRV7	6.00E-03	1.34E-02	3.23	SAFETY/RELIEF VALVE FAILS TO RE-CLOSE
B21-SRV-OO-ANYSRV8	6.00E-03	1.34E-02	3.23	SAFETY/RELIEF VALVE FAILS TO RE-CLOSE
B21-SRV-OO-ANYSRV9	6.00E-03	1.34E-02	3.23	SAFETY/RELIEF VALVE FAILS TO RE-CLOSE
B21-SRV-OO-F006A	6.00E-03	3.16E-03	1.52	SAFETY/RELIEF VALVE F006A FAILS TO RE-CLOSE
B21-SRV-OO-F006B	6.00E-03	3.16E-03	1.52	SAFETY/RELIEF VALVE F006B FAILS TO RE-CLOSE
B21-SRV-OO-F006C	6.00E-03	3.16E-03	1.52	SAFETY/RELIEF VALVE F006C FAILS TO RE-CLOSE
B21-SRV-OO-F006D	6.00E-03	3.16E-03	1.52	SAFETY/RELIEF VALVE F006D FAILS TO RE-CLOSE
B21-SRV-OO-F006E	6.00E-03	3.16E-03	1.52	SAFETY/RELIEF VALVE F006E FAILS TO RE-CLOSE
B21-SRV-OO-F006F	6.00E-03	3.16E-03	1.52	SAFETY/RELIEF VALVE F006F FAILS TO RE-CLOSE
B21-SRV-OO-F006G	6.00E-03	3.16E-03	1.52	SAFETY/RELIEF VALVE F006G FAILS TO RE-CLOSE
B21-SRV-OO-F006H	6.00E-03	3.16E-03	1.52	SAFETY/RELIEF VALVE F006H FAILS TO RE-CLOSE
B21-SRV-OO-F006J	6.00E-03	3.16E-03	1.52	SAFETY/RELIEF VALVE F006J FAILS TO RE-CLOSE
B21-SRV-OO-F006K	6.00E-03	3.16E-03	1.52	SAFETY/RELIEF VALVE F006K FAILS TO RE-CLOSE
B21-SRV-RO-F006_ALL	4.74E-07	1.07E-06	3.23	CCF of all components in group 'B21-SRV-RO-F006'
B21-UV_-CC-F102_1_2	2.99E-06	1.67E-06	1.54	CCF of two components: B21-UV_-CC-F102A & B21-UV_-CC-F102B
B21-UV_-CC-F102A	1.00E-04	1.29E-04	2.28	CHECK VALVE F102A FAILS TO OPEN
B21-UV_-CC-F111_1_2	2.99E-06	1.67E-06	1.54	CCF of two components: B21-UV_-CC-F111A & B21-UV_-CC-F111B
B21-UV_-CC-F111A	1.00E-04	1.29E-04	2.28	CHECK VALVE F111A FAILS TO OPEN
B21-UV_-OC-F102A	4.80E-06	2.61E-06	1.53	CHECK VALVE F102A FAILS TO REMAIN OPEN
B21-UV_-OO_ALL	1.72E-05	9.11E-06	1.53	CCF of all components in group 'B21-UV_-OO'
B21-XHE-FO-6OPEN	1.61E-03	1.09E-03	1.67	OPERATOR FAILS TO OPEN 6/10 SRVs
B32-ACC-FO-A105A	2.40E-06	1.48E-04	62.49	Nitrogen or Air Accumulator Fails
B32-ACC-FO-A105B	2.40E-06	1.48E-04	62.49	Nitrogen or Air Accumulator Fails
B32-HOV-FO-F005A	2.00E-03	1.07E-05	1.01	ELECTRO-HYDRAULIC VALVE FAILS TO OPERATE
B32-HOV-FO-F005B	2.00E-03	1.07E-05	1.01	ELECTRO-HYDRAULIC VALVE FAILS TO OPERATE

Table 14.6-4

High Wind At-Power Importance Measure Report

Core Damage Frequency = 8.51E-09

Event Name	Probability	Fus Ves	RAW	Description
B32-HOV-FO-F005C	2.00E-03	1.07E-05	1.01	ELECTRO-HYDRAULIC VALVE FAILS TO OPERATE
B32-HOV-FO-F005D	2.00E-03	1.07E-05	1.01	ELECTRO-HYDRAULIC VALVE FAILS TO OPERATE
B32-HOV-OC-F001A	2.40E-06	1.41E-04	59.35	ELECTRO-HYDRAULIC VALVE FAILS TO REMAIN OPEN
B32-HOV-OC-F001B	2.40E-06	1.41E-04	59.35	ELECTRO-HYDRAULIC VALVE FAILS TO REMAIN OPEN
B32-HOV-OC-F001C	2.40E-06	1.41E-04	59.35	ELECTRO-HYDRAULIC VALVE FAILS TO REMAIN OPEN
B32-HOV-OC-F001D	2.40E-06	1.41E-04	59.35	ELECTRO-HYDRAULIC VALVE FAILS TO REMAIN OPEN
B32-HOV-OC-F004A	2.40E-06	1.41E-04	59.35	ELECTRO-HYDRAULIC VALVE FAILS TO REMAIN OPEN
B32-HOV-OC-F004B	2.40E-06	1.41E-04	59.35	ELECTRO-HYDRAULIC VALVE FAILS TO REMAIN OPEN
B32-HOV-OC-F004C	2.40E-06	1.41E-04	59.35	ELECTRO-HYDRAULIC VALVE FAILS TO REMAIN OPEN
B32-HOV-OC-F004D	2.40E-06	1.41E-04	59.35	ELECTRO-HYDRAULIC VALVE FAILS TO REMAIN OPEN
B32-HX_-PG_1_2	9.02E-08	4.21E-05	466.74	CCF of two components: B32-HX_-PG-HX001A & B32-HX_-PG-HX001B
B32-HX_-PG_1_2_3	3.01E-09	1.31E-06	435.1	CCF of three components: B32-HX_-PG-HX001A & B32-HX_-PG-HX001B & B32-HX_-PG-HX00
B32-HX_-PG_1_2_4	3.01E-09	1.31E-06	435.1	CCF of three components: B32-HX_-PG-HX001A & B32-HX_-PG-HX001B & B32-HX_-PG-HX00
B32-HX_-PG_1_2_5	3.01E-09	1.31E-06	435.1	CCF of three components: B32-HX_-PG-HX001A & B32-HX_-PG-HX001B & B32-HX_-PG-HX00
B32-HX_-PG_1_2_6	3.01E-09	1.31E-06	435.1	CCF of three components: B32-HX_-PG-HX001A & B32-HX_-PG-HX001B & B32-HX_-PG-HX00
B32-HX_-PG_1_2_7	3.01E-09	1.31E-06	435.1	CCF of three components: B32-HX_-PG-HX001A & B32-HX_-PG-HX001B & B32-HX_-PG-HX00
B32-HX_-PG_1_2_8	3.01E-09	1.31E-06	435.1	CCF of three components: B32-HX_-PG-HX001A & B32-HX_-PG-HX001B & B32-HX_-PG-HX00
B32-HX_-PG_1_3	9.02E-08	4.21E-05	466.74	CCF of two components: B32-HX_-PG-HX001A & B32-HX_-PG-HX001C
B32-HX_-PG_1_3_4	3.01E-09	1.31E-06	435.1	CCF of three components: B32-HX_-PG-HX001A & B32-HX_-PG-HX001C & B32-HX_-PG-HX00

Table 14.6-4

High Wind At-Power Importance Measure Report

Core Damage Frequency = 8.51E-09

Event Name	Probability	Fus Ves	RAW	Description
B32-HX_-PG_1_3_5	3.01E-09	1.31E-06	435.1	CCF of three components: B32-HX_-PG-HX001A & B32-HX_-PG-HX001C & B32-HX_-PG-HX00
B32-HX_-PG_1_3_6	3.01E-09	1.31E-06	435.1	CCF of three components: B32-HX_-PG-HX001A & B32-HX_-PG-HX001C & B32-HX_-PG-HX00
B32-HX_-PG_1_3_7	3.01E-09	1.31E-06	435.1	CCF of three components: B32-HX_-PG-HX001A & B32-HX_-PG-HX001C & B32-HX_-PG-HX00
B32-HX_-PG_1_3_8	3.01E-09	1.31E-06	435.1	CCF of three components: B32-HX_-PG-HX001A & B32-HX_-PG-HX001C & B32-HX_-PG-HX00
B32-HX_-PG_1_4	9.02E-08	4.21E-05	466.74	CCF of two components: B32-HX_-PG-HX001A & B32-HX_-PG-HX001D
B32-HX_-PG_1_4_5	3.01E-09	1.31E-06	435.1	CCF of three components: B32-HX_-PG-HX001A & B32-HX_-PG-HX001D & B32-HX_-PG-HX00
B32-HX_-PG_1_4_6	3.01E-09	1.31E-06	435.1	CCF of three components: B32-HX_-PG-HX001A & B32-HX_-PG-HX001D & B32-HX_-PG-HX00
B32-HX_-PG_1_4_7	3.01E-09	1.31E-06	435.1	CCF of three components: B32-HX_-PG-HX001A & B32-HX_-PG-HX001D & B32-HX_-PG-HX00
B32-HX_-PG_1_4_8	3.01E-09	1.31E-06	435.1	CCF of three components: B32-HX_-PG-HX001A & B32-HX_-PG-HX001D & B32-HX_-PG-HX00
B32-HX_-PG_1_5	9.02E-08	4.54E-06	50.48	CCF of two components: B32-HX_-PG-HX001A & B32-HX_-PG-HX002A
B32-HX_-PG_1_5_6	3.01E-09	1.31E-06	435.1	CCF of three components: B32-HX_-PG-HX001A & B32-HX_-PG-HX002A & B32-HX_-PG-HX00
B32-HX_-PG_1_5_7	3.01E-09	1.31E-06	435.1	CCF of three components: B32-HX_-PG-HX001A & B32-HX_-PG-HX002A & B32-HX_-PG-HX00
B32-HX_-PG_1_5_8	3.01E-09	1.31E-06	435.1	CCF of three components: B32-HX_-PG-HX001A & B32-HX_-PG-HX002A & B32-HX_-PG-HX00
B32-HX_-PG_1_6	9.02E-08	4.21E-05	466.74	CCF of two components: B32-HX_-PG-HX001A & B32-HX_-PG-HX002B
B32-HX_-PG_1_6_7	3.01E-09	1.31E-06	435.1	CCF of three components: B32-HX_-PG-HX001A & B32-HX_-PG-HX002B & B32-HX_-PG-HX00

Table 14.6-4

High Wind At-Power Importance Measure Report

Core Damage Frequency = 8.51E-09

Event Name	Probability	Fus Ves	RAW	Description
B32-HX_-PG_1_6_8	3.01E-09	1.31E-06	435.1	CCF of three components: B32-HX_-PG-HX001A & B32-HX_-PG-HX002B & B32-HX_-PG-HX00
B32-HX_-PG_1_7	9.02E-08	4.21E-05	466.74	CCF of two components: B32-HX_-PG-HX001A & B32-HX_-PG-HX002C
B32-HX_-PG_1_7_8	3.01E-09	1.31E-06	435.1	CCF of three components: B32-HX_-PG-HX001A & B32-HX_-PG-HX002C & B32-HX_-PG-HX00
B32-HX_-PG_1_8	9.02E-08	4.21E-05	466.74	CCF of two components: B32-HX_-PG-HX001A & B32-HX_-PG-HX002D
B32-HX_-PG_2_3	9.02E-08	4.21E-05	466.74	CCF of two components: B32-HX_-PG-HX001B & B32-HX_-PG-HX001C
B32-HX_-PG_2_3_4	3.01E-09	1.31E-06	435.1	CCF of three components: B32-HX_-PG-HX001B & B32-HX_-PG-HX001C & B32-HX_-PG-HX00
B32-HX_-PG_2_3_5	3.01E-09	1.31E-06	435.1	CCF of three components: B32-HX_-PG-HX001B & B32-HX_-PG-HX001C & B32-HX_-PG-HX00
B32-HX_-PG_2_3_6	3.01E-09	1.31E-06	435.1	CCF of three components: B32-HX_-PG-HX001B & B32-HX_-PG-HX001C & B32-HX_-PG-HX00
B32-HX_-PG_2_3_7	3.01E-09	1.31E-06	435.1	CCF of three components: B32-HX_-PG-HX001B & B32-HX_-PG-HX001C & B32-HX_-PG-HX00
B32-HX_-PG_2_3_8	3.01E-09	1.31E-06	435.1	CCF of three components: B32-HX_-PG-HX001B & B32-HX_-PG-HX001C & B32-HX_-PG-HX00
B32-HX_-PG_2_4	9.02E-08	4.21E-05	466.74	CCF of two components: B32-HX_-PG-HX001B & B32-HX_-PG-HX001D
B32-HX_-PG_2_4_5	3.01E-09	1.31E-06	435.1	CCF of three components: B32-HX_-PG-HX001B & B32-HX_-PG-HX001D & B32-HX_-PG-HX00
B32-HX_-PG_2_4_6	3.01E-09	1.31E-06	435.1	CCF of three components: B32-HX_-PG-HX001B & B32-HX_-PG-HX001D & B32-HX_-PG-HX00
B32-HX_-PG_2_4_7	3.01E-09	1.31E-06	435.1	CCF of three components: B32-HX_-PG-HX001B & B32-HX_-PG-HX001D & B32-HX_-PG-HX00
B32-HX_-PG_2_4_8	3.01E-09	1.31E-06	435.1	CCF of three components: B32-HX_-PG-HX001B & B32-HX_-PG-HX001D & B32-HX_-PG-HX00
B32-HX_-PG_2_5	9.02E-08	4.21E-05	466.74	CCF of two components: B32-HX_-PG-HX001B & B32-HX_-PG-HX002A

Table 14.6-4

High Wind At-Power Importance Measure Report

Core Damage Frequency = 8.51E-09

Event Name	Probability	Fus Ves	RAW	Description
B32-HX_-PG_2_5_6	3.01E-09	1.31E-06	435.1	CCF of three components: B32-HX_-PG-HX001B & B32-HX_-PG-HX002A & B32-HX_-PG-HX00
B32-HX_-PG_2_5_7	3.01E-09	1.31E-06	435.1	CCF of three components: B32-HX_-PG-HX001B & B32-HX_-PG-HX002A & B32-HX_-PG-HX00
B32-HX_-PG_2_5_8	3.01E-09	1.31E-06	435.1	CCF of three components: B32-HX_-PG-HX001B & B32-HX_-PG-HX002A & B32-HX_-PG-HX00
B32-HX_-PG_2_6	9.02E-08	4.54E-06	50.48	CCF of two components: B32-HX_-PG-HX001B & B32-HX_-PG-HX002B
B32-HX_-PG_2_6_7	3.01E-09	1.31E-06	435.1	CCF of three components: B32-HX_-PG-HX001B & B32-HX_-PG-HX002B & B32-HX_-PG-HX00
B32-HX_-PG_2_6_8	3.01E-09	1.31E-06	435.1	CCF of three components: B32-HX_-PG-HX001B & B32-HX_-PG-HX002B & B32-HX_-PG-HX00
B32-HX_-PG_2_7	9.02E-08	4.21E-05	466.74	CCF of two components: B32-HX_-PG-HX001B & B32-HX_-PG-HX002C
B32-HX_-PG_2_7_8	3.01E-09	1.31E-06	435.1	CCF of three components: B32-HX_-PG-HX001B & B32-HX_-PG-HX002C & B32-HX_-PG-HX00
B32-HX_-PG_2_8	9.02E-08	4.21E-05	466.74	CCF of two components: B32-HX_-PG-HX001B & B32-HX_-PG-HX002D
B32-HX_-PG_3_4	9.02E-08	4.21E-05	466.74	CCF of two components: B32-HX_-PG-HX001C & B32-HX_-PG-HX001D
B32-HX_-PG_3_4_5	3.01E-09	1.31E-06	435.1	CCF of three components: B32-HX_-PG-HX001C & B32-HX_-PG-HX001D & B32-HX_-PG-HX00
B32-HX_-PG_3_4_6	3.01E-09	1.31E-06	435.1	CCF of three components: B32-HX_-PG-HX001C & B32-HX_-PG-HX001D & B32-HX_-PG-HX00
B32-HX_-PG_3_4_7	3.01E-09	1.31E-06	435.1	CCF of three components: B32-HX_-PG-HX001C & B32-HX_-PG-HX001D & B32-HX_-PG-HX00
B32-HX_-PG_3_4_8	3.01E-09	1.31E-06	435.1	CCF of three components: B32-HX_-PG-HX001C & B32-HX_-PG-HX001D & B32-HX_-PG-HX00
B32-HX_-PG_3_5	9.02E-08	4.21E-05	466.74	CCF of two components: B32-HX_-PG-HX001C & B32-HX_-PG-HX002A
B32-HX_-PG_3_5_6	3.01E-09	1.31E-06	435.1	CCF of three components: B32-HX_-PG-HX001C & B32-HX_-PG-HX002A & B32-HX_-PG-HX00

Table 14.6-4

High Wind At-Power Importance Measure Report

Core Damage Frequency = 8.51E-09

Event Name	Probability	Fus Ves	RAW	Description
B32-HX_-PG_3_5_7	3.01E-09	1.31E-06	435.1	CCF of three components: B32-HX_-PG-HX001C & B32-HX_-PG-HX002A & B32-HX_-PG-HX00
B32-HX_-PG_3_5_8	3.01E-09	1.31E-06	435.1	CCF of three components: B32-HX_-PG-HX001C & B32-HX_-PG-HX002A & B32-HX_-PG-HX00
B32-HX_-PG_3_6	9.02E-08	4.21E-05	466.74	CCF of two components: B32-HX_-PG-HX001C & B32-HX_-PG-HX002B
B32-HX_-PG_3_6_7	3.01E-09	1.31E-06	435.1	CCF of three components: B32-HX_-PG-HX001C & B32-HX_-PG-HX002B & B32-HX_-PG-HX00
B32-HX_-PG_3_6_8	3.01E-09	1.31E-06	435.1	CCF of three components: B32-HX_-PG-HX001C & B32-HX_-PG-HX002B & B32-HX_-PG-HX00
B32-HX_-PG_3_7	9.02E-08	4.54E-06	50.48	CCF of two components: B32-HX_-PG-HX001C & B32-HX_-PG-HX002C
B32-HX_-PG_3_7_8	3.01E-09	1.31E-06	435.1	CCF of three components: B32-HX_-PG-HX001C & B32-HX_-PG-HX002C & B32-HX_-PG-HX00
B32-HX_-PG_3_8	9.02E-08	4.21E-05	466.74	CCF of two components: B32-HX_-PG-HX001C & B32-HX_-PG-HX002D
B32-HX_-PG_4_5	9.02E-08	4.21E-05	466.74	CCF of two components: B32-HX_-PG-HX001D & B32-HX_-PG-HX002A
B32-HX_-PG_4_5_6	3.01E-09	1.31E-06	435.1	CCF of three components: B32-HX_-PG-HX001D & B32-HX_-PG-HX002A & B32-HX_-PG-HX00
B32-HX_-PG_4_5_7	3.01E-09	1.31E-06	435.1	CCF of three components: B32-HX_-PG-HX001D & B32-HX_-PG-HX002A & B32-HX_-PG-HX00
B32-HX_-PG_4_5_8	3.01E-09	1.31E-06	435.1	CCF of three components: B32-HX_-PG-HX001D & B32-HX_-PG-HX002A & B32-HX_-PG-HX00
B32-HX_-PG_4_6	9.02E-08	4.21E-05	466.74	CCF of two components: B32-HX_-PG-HX001D & B32-HX_-PG-HX002B
B32-HX_-PG_4_6_7	3.01E-09	1.31E-06	435.1	CCF of three components: B32-HX_-PG-HX001D & B32-HX_-PG-HX002B & B32-HX_-PG-HX00
B32-HX_-PG_4_6_8	3.01E-09	1.31E-06	435.1	CCF of three components: B32-HX_-PG-HX001D & B32-HX_-PG-HX002B & B32-HX_-PG-HX00
B32-HX_-PG_4_7	9.02E-08	4.21E-05	466.74	CCF of two components: B32-HX_-PG-HX001D & B32-HX_-PG-HX002C
B32-HX_-PG_4_7_8	3.01E-09	1.31E-06	435.1	CCF of three components: B32-HX_-PG-HX001D & B32-HX_-PG-HX002C & B32-HX_-PG-HX00

Table 14.6-4

High Wind At-Power Importance Measure Report

Core Damage Frequency = 8.51E-09

Event Name	Probability	Fus Ves	RAW	Description
B32-HX_-PG_4_8	9.02E-08	4.54E-06	50.48	CCF of two components: B32-HX_-PG-HX001D & B32-HX_-PG-HX002D
B32-HX_-PG_5_6	9.02E-08	4.21E-05	466.74	CCF of two components: B32-HX_-PG-HX002A & B32-HX_-PG-HX002B
B32-HX_-PG_5_6_7	3.01E-09	1.31E-06	435.1	CCF of three components: B32-HX_-PG-HX002A & B32-HX_-PG-HX002B & B32-HX_-PG-HX00
B32-HX_-PG_5_6_8	3.01E-09	1.31E-06	435.1	CCF of three components: B32-HX_-PG-HX002A & B32-HX_-PG-HX002B & B32-HX_-PG-HX00
B32-HX_-PG_5_7	9.02E-08	4.21E-05	466.74	CCF of two components: B32-HX_-PG-HX002A & B32-HX_-PG-HX002C
B32-HX_-PG_5_7_8	3.01E-09	1.31E-06	435.1	CCF of three components: B32-HX_-PG-HX002A & B32-HX_-PG-HX002C & B32-HX_-PG-HX00
B32-HX_-PG_5_8	9.02E-08	4.21E-05	466.74	CCF of two components: B32-HX_-PG-HX002A & B32-HX_-PG-HX002D
B32-HX_-PG_6_7	9.02E-08	4.21E-05	466.74	CCF of two components: B32-HX_-PG-HX002B & B32-HX_-PG-HX002C
B32-HX_-PG_6_7_8	3.01E-09	1.31E-06	435.1	CCF of three components: B32-HX_-PG-HX002B & B32-HX_-PG-HX002C & B32-HX_-PG-HX00
B32-HX_-PG_6_8	9.02E-08	4.21E-05	466.74	CCF of two components: B32-HX_-PG-HX002B & B32-HX_-PG-HX002D
B32-HX_-PG_7_8	9.02E-08	4.21E-05	466.74	CCF of two components: B32-HX_-PG-HX002C & B32-HX_-PG-HX002D
B32-HX_-PG_ALL	5.68E-07	2.81E-04	494.92	CCF of all components in group 'B32-HX_-PG'
B32-HX_-PG-HX001A	2.40E-05	1.43E-03	60.54	Heat Exchanger HX001A Plugs
B32-HX_-PG-HX001B	2.40E-05	1.43E-03	60.54	Heat Exchanger HX001B Plugs
B32-HX_-PG-HX001C	2.40E-05	1.43E-03	60.54	Heat Exchanger HX001C Plugs
B32-HX_-PG-HX001D	2.40E-05	1.43E-03	60.54	Heat Exchanger HX001D Plugs
B32-HX_-PG-HX002A	2.40E-05	1.43E-03	60.54	Heat Exchanger HX002A Plugs
B32-HX_-PG-HX002B	2.40E-05	1.43E-03	60.54	Heat Exchanger HX002B Plugs
B32-HX_-PG-HX002C	2.40E-05	1.43E-03	60.54	Heat Exchanger HX002A Plugs
B32-HX_-PG-HX002D	2.40E-05	1.43E-03	60.54	Heat Exchanger HX002D Plugs
B32-NONCONDENSE	1.00E+00	1.85E-01	1	Non condensable gasses form in ICS sufficiently to require venting
B32-NPO-CC-F006A	1.00E-04	1.07E-05	1.11	Condensate return F006A fails to Open

Table 14.6-4

High Wind At-Power Importance Measure Report

Core Damage Frequency = 8.51E-09

Event Name	Probability	Fus Ves	RAW	Description
B32-NPO-CC-F006B	1.00E-04	1.07E-05	1.11	Condensate return F006B fails to Open
B32-NPO-CC-F006C	1.00E-04	1.07E-05	1.11	Condensate return F006C fails to Open
B32-NPO-CC-F006D	1.00E-04	1.07E-05	1.11	Condensate return F006D fails to Open
B32-NPO-CC-F105A	1.00E-04	6.26E-03	63.56	F105A Fails to Open
B32-NPO-CC-F105B	1.00E-04	6.26E-03	63.56	F105B fails to open
B32-NPO-CC-XCONN_1_2	9.65E-06	1.14E-03	118.94	CCF of two components: B32-NPO-CC-F105A & B32-NPO-CC-F105B
B32-NPO-OC-F002A	2.40E-06	1.41E-04	59.35	F002A Spuriously closes
B32-NPO-OC-F002B	2.40E-06	1.41E-04	59.35	F002B Spuriously closes
B32-NPO-OC-F002C	2.40E-06	1.41E-04	59.35	F002C Spuriously closes
B32-NPO-OC-F002D	2.40E-06	1.41E-04	59.35	F002D Spuriously closes
B32-NPO-OC-F003A	2.40E-06	1.41E-04	59.35	F003A Spuriously closes
B32-NPO-OC-F003B	2.40E-06	1.41E-04	59.35	F003B Spuriously closes
B32-NPO-OC-F003C	2.40E-06	1.41E-04	59.35	F003C Spuriously closes
B32-NPO-OC-F003D	2.40E-06	1.41E-04	59.35	F003D Spuriously closes
B32-SOV-FD-F012_1_2	1.85E-05	4.36E-06	1.23	CCF of two components: B32-SOV-FD-F012A & B32-SOV-FD-F012B
B32-SOV-FD-F012_1_3	1.85E-05	4.36E-06	1.23	CCF of two components: B32-SOV-FD-F012A & B32-SOV-FD-F012C
B32-SOV-FD-F012_1_4	1.85E-05	4.36E-06	1.23	CCF of two components: B32-SOV-FD-F012A & B32-SOV-FD-F012D
B32-SOV-FD-F012_2_3	1.85E-05	4.36E-06	1.23	CCF of two components: B32-SOV-FD-F012B & B32-SOV-FD-F012C
B32-SOV-FD-F012_2_4	1.85E-05	4.36E-06	1.23	CCF of two components: B32-SOV-FD-F012B & B32-SOV-FD-F012D
B32-SOV-FD-F012_3_4	1.85E-05	4.36E-06	1.23	CCF of two components: B32-SOV-FD-F012C & B32-SOV-FD-F012D
B32-SOV-FD-F012_ALL	5.00E-05	2.22E-05	1.44	CCF of all components in group 'B32-SOV-FD-F012'
B32-SOV-FD-F012A	1.00E-03	1.15E-04	1.11	F012A fails to open on demand
B32-SOV-FD-F012B	1.00E-03	1.15E-04	1.11	SOLENOID VALVE (FAILURE TO DE-ENERGIZE)
B32-SOV-FD-F012C	1.00E-03	1.15E-04	1.11	SOLENOID VALVE (FAILURE TO DE-ENERGIZE)

Table 14.6-4

High Wind At-Power Importance Measure Report

Core Damage Frequency = 8.51E-09

Event Name	Probability	Fus Ves	RAW	Description
B32-SOV-FD-F012D	1.00E-03	1.15E-04	1.11	SOLENOID VALVE (FAILURE TO DE-ENERGIZE)
B32-SOV-FE-09/10_1_2	7.94E-06	6.94E-04	88.36	CCF of two components: B32-SOV-FE-F009A & B32-SOV-FE-F009B
B32-SOV-FE-09/10_1_2_3	2.65E-07	2.15E-05	82.2	CCF of three components: B32-SOV-FE-F009A & B32-SOV-FE-F009B & B32-SOV-FE-F009C
B32-SOV-FE-09/10_1_2_4	2.65E-07	2.15E-05	82.2	CCF of three components: B32-SOV-FE-F009A & B32-SOV-FE-F009B & B32-SOV-FE-F009D
B32-SOV-FE-09/10_1_2_5	2.65E-07	2.15E-05	82.2	CCF of three components: B32-SOV-FE-F009A & B32-SOV-FE-F009B & B32-SOV-FE-F010A
B32-SOV-FE-09/10_1_2_6	2.65E-07	2.15E-05	82.2	CCF of three components: B32-SOV-FE-F009A & B32-SOV-FE-F009B & B32-SOV-FE-F010B
B32-SOV-FE-09/10_1_2_7	2.65E-07	2.15E-05	82.2	CCF of three components: B32-SOV-FE-F009A & B32-SOV-FE-F009B & B32-SOV-FE-F010C
B32-SOV-FE-09/10_1_2_8	2.65E-07	2.15E-05	82.2	CCF of three components: B32-SOV-FE-F009A & B32-SOV-FE-F009B & B32-SOV-FE-F010D
B32-SOV-FE-09/10_1_3	7.94E-06	6.94E-04	88.36	CCF of two components: B32-SOV-FE-F009A & B32-SOV-FE-F009C
B32-SOV-FE-09/10_1_3_4	2.65E-07	2.15E-05	82.2	CCF of three components: B32-SOV-FE-F009A & B32-SOV-FE-F009C & B32-SOV-FE-F009D
B32-SOV-FE-09/10_1_3_5	2.65E-07	2.15E-05	82.2	CCF of three components: B32-SOV-FE-F009A & B32-SOV-FE-F009C & B32-SOV-FE-F010A
B32-SOV-FE-09/10_1_3_6	2.65E-07	2.15E-05	82.2	CCF of three components: B32-SOV-FE-F009A & B32-SOV-FE-F009C & B32-SOV-FE-F010B
B32-SOV-FE-09/10_1_3_7	2.65E-07	2.15E-05	82.2	CCF of three components: B32-SOV-FE-F009A & B32-SOV-FE-F009C & B32-SOV-FE-F010C
B32-SOV-FE-09/10_1_3_8	2.65E-07	2.15E-05	82.2	CCF of three components: B32-SOV-FE-F009A & B32-SOV-FE-F009C & B32-SOV-FE-F010D
B32-SOV-FE-09/10_1_4	7.94E-06	6.94E-04	88.36	CCF of two components: B32-SOV-FE-F009A & B32-SOV-FE-F009D
B32-SOV-FE-09/10_1_4_5	2.65E-07	2.15E-05	82.2	CCF of three components: B32-SOV-FE-F009A & B32-SOV-FE-F009D & B32-SOV-FE-F010A

Table 14.6-4

High Wind At-Power Importance Measure Report

Core Damage Frequency = 8.51E-09

Event Name	Probability	Fus Ves	RAW	Description
B32-SOV-FE-09/10_1_4_6	2.65E-07	2.15E-05	82.2	CCF of three components: B32-SOV-FE-F009A & B32-SOV-FE-F009D & B32-SOV-FE-F010B
B32-SOV-FE-09/10_1_4_7	2.65E-07	2.15E-05	82.2	CCF of three components: B32-SOV-FE-F009A & B32-SOV-FE-F009D & B32-SOV-FE-F010C
B32-SOV-FE-09/10_1_4_8	2.65E-07	2.15E-05	82.2	CCF of three components: B32-SOV-FE-F009A & B32-SOV-FE-F009D & B32-SOV-FE-F010D
B32-SOV-FE-09/10_1_5	7.94E-06	8.10E-05	11.17	CCF of two components: B32-SOV-FE-F009A & B32-SOV-FE-F010A
B32-SOV-FE-09/10_1_5_6	2.65E-07	2.15E-05	82.2	CCF of three components: B32-SOV-FE-F009A & B32-SOV-FE-F010A & B32-SOV-FE-F010B
B32-SOV-FE-09/10_1_5_7	2.65E-07	2.15E-05	82.2	CCF of three components: B32-SOV-FE-F009A & B32-SOV-FE-F010A & B32-SOV-FE-F010C
B32-SOV-FE-09/10_1_5_8	2.65E-07	2.15E-05	82.2	CCF of three components: B32-SOV-FE-F009A & B32-SOV-FE-F010A & B32-SOV-FE-F010D
B32-SOV-FE-09/10_1_6	7.94E-06	6.94E-04	88.36	CCF of two components: B32-SOV-FE-F009A & B32-SOV-FE-F010B
B32-SOV-FE-09/10_1_6_7	2.65E-07	2.15E-05	82.2	CCF of three components: B32-SOV-FE-F009A & B32-SOV-FE-F010B & B32-SOV-FE-F010C
B32-SOV-FE-09/10_1_6_8	2.65E-07	2.15E-05	82.2	CCF of three components: B32-SOV-FE-F009A & B32-SOV-FE-F010B & B32-SOV-FE-F010D
B32-SOV-FE-09/10_1_7	7.94E-06	6.94E-04	88.36	CCF of two components: B32-SOV-FE-F009A & B32-SOV-FE-F010C
B32-SOV-FE-09/10_1_7_8	2.65E-07	2.15E-05	82.2	CCF of three components: B32-SOV-FE-F009A & B32-SOV-FE-F010C & B32-SOV-FE-F010D
B32-SOV-FE-09/10_1_8	7.94E-06	6.94E-04	88.36	CCF of two components: B32-SOV-FE-F009A & B32-SOV-FE-F010D
B32-SOV-FE-09/10_2_3	7.94E-06	6.94E-04	88.36	CCF of two components: B32-SOV-FE-F009B & B32-SOV-FE-F009C
B32-SOV-FE-09/10_2_3_4	2.65E-07	2.15E-05	82.2	CCF of three components: B32-SOV-FE-F009B & B32-SOV-FE-F009C & B32-SOV-FE-F009D
B32-SOV-FE-09/10_2_3_5	2.65E-07	2.15E-05	82.2	CCF of three components: B32-SOV-FE-F009B & B32-SOV-FE-F009C & B32-SOV-FE-F010A

Table 14.6-4

High Wind At-Power Importance Measure Report

Core Damage Frequency = 8.51E-09

Event Name	Probability	Fus Ves	RAW	Description
B32-SOV-FE-09/10_2_3_6	2.65E-07	2.15E-05	82.2	CCF of three components: B32-SOV-FE-F009B & B32-SOV-FE-F009C & B32-SOV-FE-F010B
B32-SOV-FE-09/10_2_3_7	2.65E-07	2.15E-05	82.2	CCF of three components: B32-SOV-FE-F009B & B32-SOV-FE-F009C & B32-SOV-FE-F010C
B32-SOV-FE-09/10_2_3_8	2.65E-07	2.15E-05	82.2	CCF of three components: B32-SOV-FE-F009B & B32-SOV-FE-F009C & B32-SOV-FE-F010D
B32-SOV-FE-09/10_2_4	7.94E-06	6.94E-04	88.36	CCF of two components: B32-SOV-FE-F009B & B32-SOV-FE-F009D
B32-SOV-FE-09/10_2_4_5	2.65E-07	2.15E-05	82.2	CCF of three components: B32-SOV-FE-F009B & B32-SOV-FE-F009D & B32-SOV-FE-F010A
B32-SOV-FE-09/10_2_4_6	2.65E-07	2.15E-05	82.2	CCF of three components: B32-SOV-FE-F009B & B32-SOV-FE-F009D & B32-SOV-FE-F010B
B32-SOV-FE-09/10_2_4_7	2.65E-07	2.15E-05	82.2	CCF of three components: B32-SOV-FE-F009B & B32-SOV-FE-F009D & B32-SOV-FE-F010C
B32-SOV-FE-09/10_2_4_8	2.65E-07	2.15E-05	82.2	CCF of three components: B32-SOV-FE-F009B & B32-SOV-FE-F009D & B32-SOV-FE-F010D
B32-SOV-FE-09/10_2_5	7.94E-06	6.94E-04	88.36	CCF of two components: B32-SOV-FE-F009B & B32-SOV-FE-F010A
B32-SOV-FE-09/10_2_5_6	2.65E-07	2.15E-05	82.2	CCF of three components: B32-SOV-FE-F009B & B32-SOV-FE-F010A & B32-SOV-FE-F010B
B32-SOV-FE-09/10_2_5_7	2.65E-07	2.15E-05	82.2	CCF of three components: B32-SOV-FE-F009B & B32-SOV-FE-F010A & B32-SOV-FE-F010C
B32-SOV-FE-09/10_2_5_8	2.65E-07	2.15E-05	82.2	CCF of three components: B32-SOV-FE-F009B & B32-SOV-FE-F010A & B32-SOV-FE-F010D
B32-SOV-FE-09/10_2_6	7.94E-06	8.10E-05	11.17	CCF of two components: B32-SOV-FE-F009B & B32-SOV-FE-F010B
B32-SOV-FE-09/10_2_6_7	2.65E-07	2.15E-05	82.2	CCF of three components: B32-SOV-FE-F009B & B32-SOV-FE-F010B & B32-SOV-FE-F010C
B32-SOV-FE-09/10_2_6_8	2.65E-07	2.15E-05	82.2	CCF of three components: B32-SOV-FE-F009B & B32-SOV-FE-F010B & B32-SOV-FE-F010D
B32-SOV-FE-09/10_2_7	7.94E-06	6.94E-04	88.36	CCF of two components: B32-SOV-FE-F009B & B32-SOV-FE-F010C

Table 14.6-4

High Wind At-Power Importance Measure Report

Core Damage Frequency = 8.51E-09

Event Name	Probability	Fus Ves	RAW	Description
B32-SOV-FE-09/10_2_7_8	2.65E-07	2.15E-05	82.2	CCF of three components: B32-SOV-FE-F009B & B32-SOV-FE-F010C & B32-SOV-FE-F010D
B32-SOV-FE-09/10_2_8	7.94E-06	6.94E-04	88.36	CCF of two components: B32-SOV-FE-F009B & B32-SOV-FE-F010D
B32-SOV-FE-09/10_3_4	7.94E-06	6.94E-04	88.36	CCF of two components: B32-SOV-FE-F009C & B32-SOV-FE-F009D
B32-SOV-FE-09/10_3_4_5	2.65E-07	2.15E-05	82.2	CCF of three components: B32-SOV-FE-F009C & B32-SOV-FE-F009D & B32-SOV-FE-F010A
B32-SOV-FE-09/10_3_4_6	2.65E-07	2.15E-05	82.2	CCF of three components: B32-SOV-FE-F009C & B32-SOV-FE-F009D & B32-SOV-FE-F010B
B32-SOV-FE-09/10_3_4_7	2.65E-07	2.15E-05	82.2	CCF of three components: B32-SOV-FE-F009C & B32-SOV-FE-F009D & B32-SOV-FE-F010C
B32-SOV-FE-09/10_3_4_8	2.65E-07	2.15E-05	82.2	CCF of three components: B32-SOV-FE-F009C & B32-SOV-FE-F009D & B32-SOV-FE-F010D
B32-SOV-FE-09/10_3_5	7.94E-06	6.94E-04	88.36	CCF of two components: B32-SOV-FE-F009C & B32-SOV-FE-F010A
B32-SOV-FE-09/10_3_5_6	2.65E-07	2.15E-05	82.2	CCF of three components: B32-SOV-FE-F009C & B32-SOV-FE-F010A & B32-SOV-FE-F010B
B32-SOV-FE-09/10_3_5_7	2.65E-07	2.15E-05	82.2	CCF of three components: B32-SOV-FE-F009C & B32-SOV-FE-F010A & B32-SOV-FE-F010C
B32-SOV-FE-09/10_3_5_8	2.65E-07	2.15E-05	82.2	CCF of three components: B32-SOV-FE-F009C & B32-SOV-FE-F010A & B32-SOV-FE-F010D
B32-SOV-FE-09/10_3_6	7.94E-06	6.94E-04	88.36	CCF of two components: B32-SOV-FE-F009C & B32-SOV-FE-F010B
B32-SOV-FE-09/10_3_6_7	2.65E-07	2.15E-05	82.2	CCF of three components: B32-SOV-FE-F009C & B32-SOV-FE-F010B & B32-SOV-FE-F010C
B32-SOV-FE-09/10_3_6_8	2.65E-07	2.15E-05	82.2	CCF of three components: B32-SOV-FE-F009C & B32-SOV-FE-F010B & B32-SOV-FE-F010D
B32-SOV-FE-09/10_3_7	7.94E-06	8.10E-05	11.17	CCF of two components: B32-SOV-FE-F009C & B32-SOV-FE-F010C
B32-SOV-FE-09/10_3_7_8	2.65E-07	2.15E-05	82.2	CCF of three components: B32-SOV-FE-F009C & B32-SOV-FE-F010C & B32-SOV-FE-F010D
B32-SOV-FE-09/10_3_8	7.94E-06	6.94E-04	88.36	CCF of two components: B32-SOV-FE-F009C & B32-SOV-FE-F010D

Table 14.6-4

High Wind At-Power Importance Measure Report

Core Damage Frequency = 8.51E-09

Event Name	Probability	Fus Ves	RAW	Description
B32-SOV-FE-09/10_4_5	7.94E-06	6.94E-04	88.36	CCF of two components: B32-SOV-FE-F009D & B32-SOV-FE-F010A
B32-SOV-FE-09/10_4_5_6	2.65E-07	2.15E-05	82.2	CCF of three components: B32-SOV-FE-F009D & B32-SOV-FE-F010A & B32-SOV-FE-F010B
B32-SOV-FE-09/10_4_5_7	2.65E-07	2.15E-05	82.2	CCF of three components: B32-SOV-FE-F009D & B32-SOV-FE-F010A & B32-SOV-FE-F010C
B32-SOV-FE-09/10_4_5_8	2.65E-07	2.15E-05	82.2	CCF of three components: B32-SOV-FE-F009D & B32-SOV-FE-F010A & B32-SOV-FE-F010D
B32-SOV-FE-09/10_4_6	7.94E-06	6.94E-04	88.36	CCF of two components: B32-SOV-FE-F009D & B32-SOV-FE-F010B
B32-SOV-FE-09/10_4_6_7	2.65E-07	2.15E-05	82.2	CCF of three components: B32-SOV-FE-F009D & B32-SOV-FE-F010B & B32-SOV-FE-F010C
B32-SOV-FE-09/10_4_6_8	2.65E-07	2.15E-05	82.2	CCF of three components: B32-SOV-FE-F009D & B32-SOV-FE-F010B & B32-SOV-FE-F010D
B32-SOV-FE-09/10_4_7	7.94E-06	6.94E-04	88.36	CCF of two components: B32-SOV-FE-F009D & B32-SOV-FE-F010C
B32-SOV-FE-09/10_4_7_8	2.65E-07	2.15E-05	82.2	CCF of three components: B32-SOV-FE-F009D & B32-SOV-FE-F010C & B32-SOV-FE-F010D
B32-SOV-FE-09/10_4_8	7.94E-06	8.10E-05	11.17	CCF of two components: B32-SOV-FE-F009D & B32-SOV-FE-F010D
B32-SOV-FE-09/10_5_6	7.94E-06	6.94E-04	88.36	CCF of two components: B32-SOV-FE-F010A & B32-SOV-FE-F010B
B32-SOV-FE-09/10_5_6_7	2.65E-07	2.15E-05	82.2	CCF of three components: B32-SOV-FE-F010A & B32-SOV-FE-F010B & B32-SOV-FE-F010C
B32-SOV-FE-09/10_5_6_8	2.65E-07	2.15E-05	82.2	CCF of three components: B32-SOV-FE-F010A & B32-SOV-FE-F010B & B32-SOV-FE-F010D
B32-SOV-FE-09/10_5_7	7.94E-06	6.94E-04	88.36	CCF of two components: B32-SOV-FE-F010A & B32-SOV-FE-F010C
B32-SOV-FE-09/10_5_7_8	2.65E-07	2.15E-05	82.2	CCF of three components: B32-SOV-FE-F010A & B32-SOV-FE-F010C & B32-SOV-FE-F010D
B32-SOV-FE-09/10_5_8	7.94E-06	6.94E-04	88.36	CCF of two components: B32-SOV-FE-F010A & B32-SOV-FE-F010D
B32-SOV-FE-09/10_6_7	7.94E-06	6.94E-04	88.36	CCF of two components: B32-SOV-FE-F010B & B32-SOV-FE-F010C
B32-SOV-FE-09/10_6_7_8	2.65E-07	2.15E-05	82.2	CCF of three components: B32-SOV-FE-F010B & B32-SOV-FE-F010C & B32-SOV-FE-F010D

Table 14.6-4

High Wind At-Power Importance Measure Report

Core Damage Frequency = 8.51E-09

Event Name	Probability	Fus Ves	RAW	Description
B32-SOV-FE-09/10_6_8	7.94E-06	6.94E-04	88.36	CCF of two components: B32-SOV-FE-F010B & B32-SOV-FE-F010D
B32-SOV-FE-09/10_7_8	7.94E-06	6.94E-04	88.36	CCF of two components: B32-SOV-FE-F010C & B32-SOV-FE-F010D
B32-SOV-FE-09/10_ALL	5.00E-05	4.41E-03	89.26	CCF of all components in group 'B32-SOV-FE-09/10'
B32-SOV-FE-F009A	1.00E-03	1.12E-02	12.15	F009A fails to open on demand
B32-SOV-FE-F009B	1.00E-03	1.12E-02	12.15	SOLENOID VALVE (FAILURE TO ENERGIZE)
B32-SOV-FE-F009C	1.00E-03	1.12E-02	12.15	SOLENOID VALVE (FAILURE TO ENERGIZE)
B32-SOV-FE-F009D	1.00E-03	1.12E-02	12.15	SOLENOID VALVE (FAILURE TO ENERGIZE)
B32-SOV-FE-F010A	1.00E-03	1.12E-02	12.15	F010A fails to open on demand
B32-SOV-FE-F010B	1.00E-03	1.12E-02	12.15	SOLENOID VALVE (FAILURE TO ENERGIZE)
B32-SOV-FE-F010C	1.00E-03	1.12E-02	12.15	SOLENOID VALVE (FAILURE TO ENERGIZE)
B32-SOV-FE-F010D	1.00E-03	1.12E-02	12.15	SOLENOID VALVE (FAILURE TO ENERGIZE)
B32-SQV-CC-F104A	3.00E-03	6.57E-02	22.83	F104A FAILS TO OPEN
B32-SQV-CC-F104B	3.00E-03	6.57E-02	22.83	F104B FAILS TO OPEN
B32-SQV-CC-XCONN_1_2	3.33E-04	1.43E-02	43.94	CCF of two components: B32-SQV-CC-F104A & B32-SQV-CC-F104B
B32-SRV-RO-F011A	2.00E-04	2.13E-05	1.11	RELIEF VALVE F011A FAILS TO OPEN
B32-SRV-RO-F011B	2.00E-04	2.13E-05	1.11	RELIEF VALVE F011B FAIL TO OPEN
B32-SRV-RO-F011C	2.00E-04	2.13E-05	1.11	SAFETY/RELIEF VALVE FAILS TO OPEN (RELIEF MODE)
B32-SRV-RO-F011D	2.00E-04	2.13E-05	1.11	SAFETY/RELIEF VALVE FAILS TO OPEN (RELIEF MODE)
B32-TM-LOOPA-IND	3.84E-02	2.40E-02	1.6	ICS LOOP A IN TEST OR MAINTENANCE BY ITSELF
B32-TM-LOOPA-MULT	1.37E-03	3.63E-03	3.65	ICS LOOP A IN TEST OR MAINTENANCE, MULTIPLE LOOPS
B32-TM-LOOPB-IND	3.84E-02	2.40E-02	1.6	ICS LOOP B IN TEST OR MAINTENANCE BY ITSELF
B32-TM-LOOPB-MULT	1.37E-03	3.63E-03	3.65	ICS LOOP B IN TEST OR MAINTENANCE, MULTIPLE LOOPS
B32-TM-LOOPC-IND	3.84E-02	2.40E-02	1.6	ICS LOOP C IN TEST OR MAINTENANCE BY ITSELF
B32-TM-LOOPC-MULT	1.37E-03	3.63E-03	3.65	ICS LOOP C IN TEST OR MAINTENANCE, MULTIPLE LOOPS

Table 14.6-4

High Wind At-Power Importance Measure Report

Core Damage Frequency = 8.51E-09

Event Name	Probability	Fus Ves	RAW	Description
B32-TM-LOOPD-IND	3.84E-02	2.40E-02	1.6	ICS LOOP D IN TEST OR MAINTENANCE BY ITSELF
B32-TM-LOOPD-MULT	1.37E-03	3.63E-03	3.65	ICS LOOP D IN TEST OR MAINTENANCE, MULTIPLE LOOPS
B32-UV_-OO-F105A	1.00E-03	6.28E-02	63.74	CHECK VALVE FAILS TO CLOSE
B32-UV_-OO-F105B	1.00E-03	6.28E-02	63.74	CHECK VALVE FAILS TO CLOSE
B32-UV_-OO-XCONN-ACC_1_2	2.67E-05	3.16E-03	119.26	CCF of two components: B32-UV_-OO-F105A & B32-UV_-OO-F105B
B32-UV_-RL-F105A	2.40E-05	1.49E-03	63.18	CHECK VALVE REVERSE LEAKAGE
B32-UV_-RL-F105B	2.40E-05	1.49E-03	63.18	CHECK VALVE REVERSE LEAKAGE
B32-XHE-FO-VENT	1.76E-01	1.18E-01	1.55	Operator fails to open vent
C11-LOG-FC-CHNLA	3.60E-04	1.06E-05	1.03	LOGIC UNIT FAILS TO FUNCTION
C11-LOG-FC-CHNLB	3.60E-04	1.06E-05	1.03	LOGIC UNIT FAILS TO FUNCTION
C12-ACV-CC-SCRV126	6.90E-09	2.64E-04	3.70E+04	CCF TO OPEN OF AIR OPERATED SCRAM VALVE AOV-126
C12-INV-FC-X_1_2	4.00E-05	5.22E-07	1.01	CCF of two components: C12-INV-FC-G1X205 & C12-INV-FC-G2X205
C12-INV-FC-X_1_2_3	7.99E-05	1.41E-06	1.02	CCF of three components: C12-INV-FC-G1X205 & C12-INV-FC-G2X205 & C12-INV-FC-G3X2
C12-INV-FC-X_1_3	4.00E-05	5.22E-07	1.01	CCF of two components: C12-INV-FC-G1X205 & C12-INV-FC-G3X205
C12-INV-FC-X_2_3	4.00E-05	5.22E-07	1.01	CCF of two components: C12-INV-FC-G2X205 & C12-INV-FC-G3X205
C12-ROD-CF-SCRAM	2.50E-07	2.57E-01	1.02E+06	CCF OF CONTROL RODS TO INSERT
C41-ACV-OC-F002A	3.72E-04	8.32E-04	3.24	AIR OPERATED VALVE F002A FAILS TO REMAIN OPEN
C41-ACV-OC-F002B	3.72E-04	8.32E-04	3.24	AIR OPERATED VALVE F002B FAILS TO REMAIN OPEN
C41-ACV-OC-F002C	3.72E-04	8.32E-04	3.24	AIR OPERATED VALVE F002C FAILS TO REMAIN OPEN
C41-ACV-OC-F002D	3.72E-04	8.32E-04	3.24	AIR OPERATED VALVE F002D FAILS TO REMAIN OPEN
C41-BV_-OC-F001A	2.63E-04	5.88E-04	3.24	MAINTENANCE VALVE F001A PLUGS/TRANSFERS CLOSED
C41-BV_-OC-F001B	2.63E-04	5.88E-04	3.24	MAINTENANCE VALVE F001B PLUGS/TRANSFERS CLOSED
C41-BV_-OC-F006A	2.63E-04	5.88E-04	3.24	MAINTENANCE VALVE F006A PLUGS/TRANSFERS CLOSED

Table 14.6-4

High Wind At-Power Importance Measure Report

Core Damage Frequency = 8.51E-09

Event Name	Probability	Fus Ves	RAW	Description
C41-BV_-OC-F006B	2.63E-04	5.88E-04	3.24	MAINTENANCE VALVE F006B PLUGS/TRANSFERS CLOSED
C41-SQV-CC_1_2	5.56E-05	7.83E-07	1.01	CCF of two components: C41-SQV-CC-F003A & C41-SQV-CC-F003B
C41-SQV-CC_1_2_3	5.56E-06	1.24E-05	3.23	CCF of three components: C41-SQV-CC-F003A & C41-SQV-CC-F003B & C41-SQV-CC-F003C
C41-SQV-CC_1_2_4	5.56E-06	1.24E-05	3.23	CCF of three components: C41-SQV-CC-F003A & C41-SQV-CC-F003B & C41-SQV-CC-F003D
C41-SQV-CC_1_3	5.56E-05	1.24E-04	3.24	CCF of two components: C41-SQV-CC-F003A & C41-SQV-CC-F003C
C41-SQV-CC_1_3_4	5.56E-06	1.24E-05	3.23	CCF of three components: C41-SQV-CC-F003A & C41-SQV-CC-F003C & C41-SQV-CC-F003D
C41-SQV-CC_1_4	5.56E-05	7.83E-07	1.01	CCF of two components: C41-SQV-CC-F003A & C41-SQV-CC-F003D
C41-SQV-CC_2_3	5.56E-05	7.83E-07	1.01	CCF of two components: C41-SQV-CC-F003B & C41-SQV-CC-F003C
C41-SQV-CC_2_3_4	5.56E-06	1.24E-05	3.23	CCF of three components: C41-SQV-CC-F003B & C41-SQV-CC-F003C & C41-SQV-CC-F003D
C41-SQV-CC_2_4	5.56E-05	1.24E-04	3.24	CCF of two components: C41-SQV-CC-F003B & C41-SQV-CC-F003D
C41-SQV-CC_3_4	5.56E-05	7.83E-07	1.01	CCF of two components: C41-SQV-CC-F003C & C41-SQV-CC-F003D
C41-SQV-CC_ALL	1.50E-04	3.36E-04	3.24	CCF of all components in group 'C41-SQV-CC'
C41-SQV-CC-F003A	3.00E-03	2.09E-05	1.01	SQUIB VALVE F003A FAILS TO OPERATE
C41-SQV-CC-F003B	3.00E-03	2.09E-05	1.01	SQUIB VALVE F003B FAILS TO OPERATE
C41-SQV-CC-F003C	3.00E-03	2.09E-05	1.01	SQUIB VALVE F003C FAILS TO OPERATE
C41-SQV-CC-F003D	3.00E-03	2.09E-05	1.01	SQUIB VALVE F003D FAILS TO OPERATE
C41-TNK-RP-A001A	2.40E-06	5.38E-06	3.24	ACCUMULATOR A001A FAILS CATASTROPHICALLY
C41-TNK-RP-A001B	2.40E-06	5.38E-06	3.24	ACCUMULATOR A001B FAILS CATASTROPHICALLY
C41-UV_-CC_1_2	2.85E-07	6.53E-07	3.25	CCF of two components: C41-UV_-CC-F004A & C41-UV_-CC-F004B
C41-UV_-CC_1_2_3	2.26E-06	5.04E-06	3.23	CCF of three components: C41-UV_-CC-F004A & C41-UV_-CC-F004B & C41-UV_-CC-F005A

Table 14.6-4

High Wind At-Power Importance Measure Report

Core Damage Frequency = 8.51E-09

Event Name	Probability	Fus Ves	RAW	Description
C41-UV_-CC_1_2_4	2.26E-06	5.04E-06	3.23	CCF of three components: C41-UV_-CC-F004A & C41-UV_-CC-F004B & C41-UV_-CC-F005B
C41-UV_-CC_1_3	2.85E-07	6.53E-07	3.25	CCF of two components: C41-UV_-CC-F004A & C41-UV_-CC-F005A
C41-UV_-CC_1_3_4	2.26E-06	5.04E-06	3.23	CCF of three components: C41-UV_-CC-F004A & C41-UV_-CC-F005A & C41-UV_-CC-F005B
C41-UV_-CC_1_4	2.85E-07	6.53E-07	3.25	CCF of two components: C41-UV_-CC-F004A & C41-UV_-CC-F005B
C41-UV_-CC_2_3	2.85E-07	6.53E-07	3.25	CCF of two components: C41-UV_-CC-F004B & C41-UV_-CC-F005A
C41-UV_-CC_2_3_4	2.26E-06	5.04E-06	3.23	CCF of three components: C41-UV_-CC-F004B & C41-UV_-CC-F005A & C41-UV_-CC-F005B
C41-UV_-CC_2_4	2.85E-07	6.53E-07	3.25	CCF of two components: C41-UV_-CC-F004B & C41-UV_-CC-F005B
C41-UV_-CC_3_4	2.85E-07	6.53E-07	3.25	CCF of two components: C41-UV_-CC-F005A & C41-UV_-CC-F005B
C41-UV_-CC_ALL	1.37E-05	3.07E-05	3.23	CCF of all components in group 'C41-UV_-CC'
C41-UV_-CC-F004A	8.00E-04	1.79E-03	3.24	CHECK VALVE F004A FAILS TO OPEN
C41-UV_-CC-F004B	8.00E-04	1.79E-03	3.24	CHECK VALVE F004B FAILS TO OPEN
C41-UV_-CC-F005A	8.00E-04	1.79E-03	3.24	CHECK VALVE F005A FAILS TO OPEN
C41-UV_-CC-F005B	8.00E-04	1.79E-03	3.24	CHECK VALVE F005B FAILS TO OPEN
C51-CCFSOFTWARE	1.00E-04	2.25E-04	3.25	NMS COMMON CAUSE SOFTWARE FAILURE
C62-CCFSOFTWARE	1.00E-04	2.06E-06	1.02	N-DCIS COMMON CAUSE SOFTWARE FAILURE
C62-CCFSOFTWARE_S	1.00E-04	2.06E-06	1.02	N-DCIS SPURIOUS COMMON CAUSE SOFTWARE FAILURE
C62-LT_-NO-DPSPX_1_2_3	1.33E-07	2.09E-07	2.47	CCF of three components: C62-LT_-NO-PLLVLA & C62-LT_-NO-PLLVLB & C62-LT_-NO-PLLV
C62-LT_-NO-DPSPX_1_2_4	1.33E-07	2.09E-07	2.47	CCF of three components: C62-LT_-NO-PLLVLA & C62-LT_-NO-PLLVLB & C62-LT_-NO-PLLV
C62-LT_-NO-DPSPX_1_3_4	1.33E-07	2.09E-07	2.47	CCF of three components: C62-LT_-NO-PLLVLA & C62-LT_-NO-PLLVLC & C62-LT_-NO-PLLV
C62-LT_-NO-DPSPX_1_4	1.33E-06	3.08E-06	3.29	CCF of two components: C62-LT_-NO-PLLVLA & C62-LT_-NO-PLLVLD

Table 14.6-4

High Wind At-Power Importance Measure Report

Core Damage Frequency = 8.51E-09

Event Name	Probability	Fus Ves	RAW	Description
C62-LT_-NO-DPSPX_2_3	1.33E-06	3.08E-06	3.29	CCF of two components: C62-LT_-NO-PLLVLB & C62-LT_-NO-PLLVLC
C62-LT_-NO-DPSPX_2_3_4	1.33E-07	2.09E-07	2.47	CCF of three components: C62-LT_-NO-PLLVLB & C62-LT_-NO-PLLVLC & C62-LT_-NO-PLLV
C62-LT_-NO-DPSPX_ALL	3.60E-06	8.48E-06	3.34	CCF of all components in group 'C62-LT_-NO-DPSPX'
C62-LT_-NO-NDCRX_1_2_3	1.91E-08	4.07E-06	214.1	CCF of three components: C62-LT_-NO-RXLVLA & C62-LT_-NO-RXLVLB & C62-LT_-NO-RXLV
C62-LT_-NO-NDCRX_1_2_4	1.91E-08	4.07E-06	214.1	CCF of three components: C62-LT_-NO-RXLVLA & C62-LT_-NO-RXLVLB & C62-LT_-NO-RXLV
C62-LT_-NO-NDCRX_1_3_4	1.91E-08	4.07E-06	214.1	CCF of three components: C62-LT_-NO-RXLVLA & C62-LT_-NO-RXLVLC & C62-LT_-NO-RXLV
C62-LT_-NO-NDCRX_2_3_4	1.91E-08	4.07E-06	214.1	CCF of three components: C62-LT_-NO-RXLVLB & C62-LT_-NO-RXLVLC & C62-LT_-NO-RXLV
C62-LT_-NO-NDCRX_ALL	3.60E-06	9.16E-04	255.08	CCF of all components in group 'C62-LT_-NO-NDCRX'
C62-PSP-FO-DPSEP_1_5_6	4.00E-09	5.43E-06	1.36E+03	CCF of three components: C62-PSP-FO-DPSAPSA & C72-PSP-FO-DPSCNTPSA & C72-PSP-FO-
C62-PSP-FO-DPSEP_2_5_6	4.00E-09	5.43E-06	1.36E+03	CCF of three components: C62-PSP-FO-DPSAPSB & C72-PSP-FO-DPSCNTPSA & C72-PSP-FO-
C62-PSP-FO-DPSEP_3_5_6	4.00E-09	5.43E-06	1.36E+03	CCF of three components: C62-PSP-FO-DPSBPSA & C72-PSP-FO-DPSCNTPSA & C72-PSP-FO-
C62-PSP-FO-DPSEP_4_5_6	4.00E-09	5.43E-06	1.36E+03	CCF of three components: C62-PSP-FO-DPSBPSB & C72-PSP-FO-DPSCNTPSA & C72-PSP-FO-
C62-PSP-FO-DPSEP_5_6	8.00E-08	1.20E-04	1.50E+03	CCF of two components: C72-PSP-FO-DPSCNTPSA & C72-PSP-FO-DPSCNTPSB
C62-PSP-FO-DPSEP_ALL	3.60E-07	5.45E-04	1.52E+03	CCF of all components in group 'C62-PSP-FO-DPSEP'

Table 14.6-4

High Wind At-Power Importance Measure Report

Core Damage Frequency = 8.51E-09

Event Name	Probability	Fus Ves	RAW	Description
C62-TT_-NO-NDCRX_1_2_3	4.67E-08	1.05E-05	224.83	CCF of three components: C62-TT_-NO-TEMPA & C62-TT_-NO-TEMPB & C62-TT_-NO-TEMPC
C62-TT_-NO-NDCRX_1_2_4	4.67E-08	1.05E-05	224.83	CCF of three components: C62-TT_-NO-TEMPA & C62-TT_-NO-TEMPB & C62-TT_-NO-TEMPD
C62-TT_-NO-NDCRX_1_3_4	4.67E-08	1.05E-05	224.83	CCF of three components: C62-TT_-NO-TEMPA & C62-TT_-NO-TEMPC & C62-TT_-NO-TEMPD
C62-TT_-NO-NDCRX_2_3_4	4.67E-08	1.05E-05	224.83	CCF of three components: C62-TT_-NO-TEMPB & C62-TT_-NO-TEMPC & C62-TT_-NO-TEMPD
C62-TT_-NO-NDCRX_ALL	1.26E-06	3.17E-04	252.1	CCF of all components in group 'C62-TT_-NO-NDCRX'
C63-CCFSOFTWARE	1.00E-04	2.64E-01	2.64E+03	Common cause failure of software
C63-CCFSOFTWARE_S	1.00E-04	5.02E-02	502.81	ESF SPURIOUS COMMON CAUSE SOFTWARE FAILURE
C63-DTM-FC-ESFD1	6.00E-04	4.10E-05	1.07	ESF DIV 1 MASTER DTM
C63-DTM-FC-ESFD2	6.00E-04	4.10E-05	1.07	ESF DIV 2 MASTER DTM
C63-DTM-FC-ESFD3	6.00E-04	4.10E-05	1.07	ESF DIV 3 MASTER DTM
C63-DTM-FC-ESFD4	6.00E-04	4.10E-05	1.07	ESF DIV 4 MASTER DTM
C63-DTM-FC-ESFLG_1_2	1.11E-05	3.64E-05	4.25	CCF of two components: C63-DTM-FC-ESFD1 & C63-DTM-FC-ESFD2
C63-DTM-FC-ESFLG_1_2_3	1.11E-06	2.35E-03	2.12E+03	CCF of three components: C63-DTM-FC-ESFD1 & C63-DTM-FC-ESFD2 & C63-DTM-FC-ESFD3
C63-DTM-FC-ESFLG_1_2_4	1.11E-06	2.35E-03	2.12E+03	CCF of three components: C63-DTM-FC-ESFD1 & C63-DTM-FC-ESFD2 & C63-DTM-FC-ESFD4
C63-DTM-FC-ESFLG_1_3	1.11E-05	3.64E-05	4.25	CCF of two components: C63-DTM-FC-ESFD1 & C63-DTM-FC-ESFD3
C63-DTM-FC-ESFLG_1_3_4	1.11E-06	2.35E-03	2.12E+03	CCF of three components: C63-DTM-FC-ESFD1 & C63-DTM-FC-ESFD3 & C63-DTM-FC-ESFD4
C63-DTM-FC-ESFLG_1_4	1.11E-05	3.64E-05	4.25	CCF of two components: C63-DTM-FC-ESFD1 & C63-DTM-FC-ESFD4

Table 14.6-4

High Wind At-Power Importance Measure Report

Core Damage Frequency = 8.51E-09

Event Name	Probability	Fus Ves	RAW	Description
C63-DTM-FC-ESFLG_2_3	1.11E-05	3.64E-05	4.25	CCF of two components: C63-DTM-FC-ESFD2 & C63-DTM-FC-ESFD3
C63-DTM-FC-ESFLG_2_3_4	1.11E-06	2.35E-03	2.12E+03	CCF of three components: C63-DTM-FC-ESFD2 & C63-DTM-FC-ESFD3 & C63-DTM-FC-ESFD4
C63-DTM-FC-ESFLG_2_4	1.11E-05	3.64E-05	4.25	CCF of two components: C63-DTM-FC-ESFD2 & C63-DTM-FC-ESFD4
C63-DTM-FC-ESFLG_3_4	1.11E-05	3.64E-05	4.25	CCF of two components: C63-DTM-FC-ESFD3 & C63-DTM-FC-ESFD4
C63-DTM-FC-ESFLG_ALL	3.00E-05	6.47E-02	2.16E+03	CCF of all components in group 'C63-DTM-FC-ESFLG'
C63-LDD-FC-ESFLOADS	1.86E-06	4.75E-03	2.55E+03	CCF OF ALL ESF LOAD DRIVERS
C63-LDD-FC-S1B32F009A-B	1.09E-03	2.22E-05	1.02	LOAD DRIVER FAILS DURING OPERATION
C63-LDD-FC-S1B32F009A-D	1.09E-03	2.22E-05	1.02	LOAD DRIVER FAILS DURING OPERATION
C63-LDD-FC-S1B32F009B-A	1.09E-03	2.22E-05	1.02	LOAD DRIVER FAILS DURING OPERATION
C63-LDD-FC-S1B32F009B-C	1.09E-03	2.22E-05	1.02	LOAD DRIVER FAILS DURING OPERATION
C63-LDD-FC-S1B32F009C-B	1.09E-03	2.22E-05	1.02	LOAD DRIVER FAILS DURING OPERATION
C63-LDD-FC-S1B32F009C-D	1.09E-03	2.22E-05	1.02	LOAD DRIVER FAILS DURING OPERATION
C63-LDD-FC-S1B32F009D-A	1.09E-03	2.22E-05	1.02	LOAD DRIVER FAILS DURING OPERATION
C63-LDD-FC-S1B32F009D-C	1.09E-03	2.22E-05	1.02	LOAD DRIVER FAILS DURING OPERATION

Table 14.6-4

High Wind At-Power Importance Measure Report

Core Damage Frequency = 8.51E-09

Event Name	Probability	Fus Ves	RAW	Description
C63-LDD-FC-S1B32F010A-B	1.09E-03	2.22E-05	1.02	LOAD DRIVER FAILS DURING OPERATION
C63-LDD-FC-S1B32F010A-D	1.09E-03	2.22E-05	1.02	LOAD DRIVER FAILS DURING OPERATION
C63-LDD-FC-S1B32F010B-A	1.09E-03	2.22E-05	1.02	LOAD DRIVER FAILS DURING OPERATION
C63-LDD-FC-S1B32F010B-C	1.09E-03	2.22E-05	1.02	LOAD DRIVER FAILS DURING OPERATION
C63-LDD-FC-S1B32F010C-B	1.09E-03	2.22E-05	1.02	LOAD DRIVER FAILS DURING OPERATION
C63-LDD-FC-S1B32F010C-D	1.09E-03	2.22E-05	1.02	LOAD DRIVER FAILS DURING OPERATION
C63-LDD-FC-S1B32F010D-A	1.09E-03	2.22E-05	1.02	LOAD DRIVER FAILS DURING OPERATION
C63-LDD-FC-S1B32F010D-C	1.09E-03	2.22E-05	1.02	LOAD DRIVER FAILS DURING OPERATION
C63-LDD-FC-S1B32F012A-A	1.09E-03	1.25E-04	1.11	LOAD DRIVER FAILS DURING OPERATION
C63-LDD-FC-S1B32F012B-B	1.09E-03	1.25E-04	1.11	LOAD DRIVER FAILS DURING OPERATION
C63-LDD-FC-S1B32F012C-C	1.09E-03	1.25E-04	1.11	LOAD DRIVER FAILS DURING OPERATION
C63-LDD-FC-S1B32F012D-D	1.09E-03	1.25E-04	1.11	LOAD DRIVER FAILS DURING OPERATION
C63-LDD-FC-S2B32F009A-B	1.09E-03	2.22E-05	1.02	LOAD DRIVER FAILS DURING OPERATION
C63-LDD-FC-S2B32F009A-D	1.09E-03	2.22E-05	1.02	LOAD DRIVER FAILS DURING OPERATION

Table 14.6-4

High Wind At-Power Importance Measure Report

Core Damage Frequency = 8.51E-09

Event Name	Probability	Fus Ves	RAW	Description
C63-LDD-FC-S2B32F009B-A	1.09E-03	2.22E-05	1.02	LOAD DRIVER FAILS DURING OPERATION
C63-LDD-FC-S2B32F009B-C	1.09E-03	2.22E-05	1.02	LOAD DRIVER FAILS DURING OPERATION
C63-LDD-FC-S2B32F009C-B	1.09E-03	2.22E-05	1.02	LOAD DRIVER FAILS DURING OPERATION
C63-LDD-FC-S2B32F009C-D	1.09E-03	2.22E-05	1.02	LOAD DRIVER FAILS DURING OPERATION
C63-LDD-FC-S2B32F009D-A	1.09E-03	2.22E-05	1.02	LOAD DRIVER FAILS DURING OPERATION
C63-LDD-FC-S2B32F009D-C	1.09E-03	2.22E-05	1.02	LOAD DRIVER FAILS DURING OPERATION
C63-LDD-FC-S2B32F010A-B	1.09E-03	2.22E-05	1.02	LOAD DRIVER FAILS DURING OPERATION
C63-LDD-FC-S2B32F010A-D	1.09E-03	2.22E-05	1.02	LOAD DRIVER FAILS DURING OPERATION
C63-LDD-FC-S2B32F010B-A	1.09E-03	2.22E-05	1.02	LOAD DRIVER FAILS DURING OPERATION
C63-LDD-FC-S2B32F010B-C	1.09E-03	2.22E-05	1.02	LOAD DRIVER FAILS DURING OPERATION
C63-LDD-FC-S2B32F010C-B	1.09E-03	2.22E-05	1.02	LOAD DRIVER FAILS DURING OPERATION
C63-LDD-FC-S2B32F010C-D	1.09E-03	2.22E-05	1.02	LOAD DRIVER FAILS DURING OPERATION
C63-LDD-FC-S2B32F010D-A	1.09E-03	2.22E-05	1.02	LOAD DRIVER FAILS DURING OPERATION
C63-LDD-FC-S2B32F010D-C	1.09E-03	2.22E-05	1.02	LOAD DRIVER FAILS DURING OPERATION

Table 14.6-4

High Wind At-Power Importance Measure Report

Core Damage Frequency = 8.51E-09

Event Name	Probability	Fus Ves	RAW	Description
C63-LDD-FC-S2B32F012A-A	1.09E-03	1.25E-04	1.11	LOAD DRIVER FAILS DURING OPERATION
C63-LDD-FC-S2B32F012B-B	1.09E-03	1.25E-04	1.11	LOAD DRIVER FAILS DURING OPERATION
C63-LDD-FC-S2B32F012C-C	1.09E-03	1.25E-04	1.11	LOAD DRIVER FAILS DURING OPERATION
C63-LDD-FC-S2B32F012D-D	1.09E-03	1.25E-04	1.11	LOAD DRIVER FAILS DURING OPERATION
C63-LOG-FC-ESFLG_ALL	1.80E-05	4.68E-02	2.60E+03	CCF of all components in group 'C63-LOG-FC-ESFLG'
C63-LT_-NO-ATWRX_1_2_3	1.33E-07	3.13E-07	3.25	CCF of three components: C63-LT_-NO-ATWSRXLVLA & C63-LT_-NO-ATWSRXLVLB & C63-LT_
C63-LT_-NO-ATWRX_1_2_4	1.33E-07	3.13E-07	3.25	CCF of three components: C63-LT_-NO-ATWSRXLVLA & C63-LT_-NO-ATWSRXLVLB & C63-LT_
C63-LT_-NO-ATWRX_1_3_4	1.33E-07	3.13E-07	3.25	CCF of three components: C63-LT_-NO-ATWSRXLVLA & C63-LT_-NO-ATWSRXLVLC & C63-LT_
C63-LT_-NO-ATWRX_2_3_4	1.33E-07	3.13E-07	3.25	CCF of three components: C63-LT_-NO-ATWSRXLVLB & C63-LT_-NO-ATWSRXLVLC & C63-LT_
C63-LT_-NO-ATWRX_ALL	3.60E-06	8.04E-06	3.23	CCF of all components in group 'C63-LT_-NO-ATWRX'
C63-LT_-NO-ESFPX_ALL	3.60E-06	1.03E-04	29.16	CCF of all components in group 'C63-LT_-NO-ESFPX'
C63-LT_-NO-ESFRX_1_2	5.71E-07	9.92E-07	2.69	CCF of two components: C63-LT_-NO-ESFRXLVLA & C63-LT_-NO-ESFRXLVLB
C63-LT_-NO-ESFRX_1_2_3	1.91E-08	3.59E-05	1.88E+03	CCF of three components: C63-LT_-NO-ESFRXLVLA & C63-LT_-NO-ESFRXLVLB & C63-LT_-N
C63-LT_-NO-ESFRX_1_2_4	1.91E-08	3.59E-05	1.88E+03	CCF of three components: C63-LT_-NO-ESFRXLVLA & C63-LT_-NO-ESFRXLVLB & C63-LT_-N

Table 14.6-4

High Wind At-Power Importance Measure Report

Core Damage Frequency = 8.51E-09

Event Name	Probability	Fus Ves	RAW	Description
C63-LT_-NO-ESFRX_1_3	5.71E-07	9.92E-07	2.69	CCF of two components: C63-LT_-NO-ESFRXLVLA & C63-LT_-NO-ESFRXLVLC
C63-LT_-NO-ESFRX_1_3_4	1.91E-08	3.59E-05	1.88E+03	CCF of three components: C63-LT_-NO-ESFRXLVLA & C63-LT_-NO-ESFRXLVLC & C63-LT_-N
C63-LT_-NO-ESFRX_1_4	5.71E-07	9.92E-07	2.69	CCF of two components: C63-LT_-NO-ESFRXLVLA & C63-LT_-NO-ESFRXLVLD
C63-LT_-NO-ESFRX_2_3	5.71E-07	9.92E-07	2.69	CCF of two components: C63-LT_-NO-ESFRXLVLB & C63-LT_-NO-ESFRXLVLC
C63-LT_-NO-ESFRX_2_3_4	1.91E-08	3.59E-05	1.88E+03	CCF of three components: C63-LT_-NO-ESFRXLVLB & C63-LT_-NO-ESFRXLVLC & C63-LT_-N
C63-LT_-NO-ESFRX_2_4	5.71E-07	9.92E-07	2.69	CCF of two components: C63-LT_-NO-ESFRXLVLB & C63-LT_-NO-ESFRXLVLD
C63-LT_-NO-ESFRX_3_4	5.71E-07	9.92E-07	2.69	CCF of two components: C63-LT_-NO-ESFRXLVLC & C63-LT_-NO-ESFRXLVLD
C63-LT_-NO-ESFRX_ALL	3.60E-06	7.27E-03	2.02E+03	CCF of all components in group 'C63-LT_-NO-ESFRX'
C63-LT_-NO-ESFRXLVLA	7.20E-05	3.45E-06	1.05	RX LVL A SENSOR TRANMITTER FAILS
C63-LT_-NO-ESFRXLVLB	7.20E-05	3.45E-06	1.05	RX LVL B SENSOR TRANSMITTER FAILS
C63-LT_-NO-ESFRXLVLC	7.20E-05	3.45E-06	1.05	RX LVL C FAILS
C63-LT_-NO-ESFRXLVLD	7.20E-05	3.45E-06	1.05	RX LVL D FAILS
C63-LT_-NO-RPSRX_1_2_3	1.33E-07	7.73E-06	58.87	CCF of three components: C63-LT_-NO-RPSRXLVLA & C63-LT_-NO-RPSRXLVLB & C63-LT_-N
C63-LT_-NO-RPSRX_1_2_4	1.33E-07	7.73E-06	58.87	CCF of three components: C63-LT_-NO-RPSRXLVLA & C63-LT_-NO-RPSRXLVLB & C63-LT_-N

Table 14.6-4

High Wind At-Power Importance Measure Report

Core Damage Frequency = 8.51E-09

Event Name	Probability	Fus Ves	RAW	Description
C63-LT_-NO-RPSRX_1_3_4	1.33E-07	7.73E-06	58.87	CCF of three components: C63-LT_-NO-RPSRXLVLA & C63-LT_-NO-RPSRXLVLC & C63-LT_-N
C63-LT_-NO-RPSRX_2_3_4	1.33E-07	7.73E-06	58.87	CCF of three components: C63-LT_-NO-RPSRXLVLB & C63-LT_-NO-RPSRXLVLC & C63-LT_-N
C63-LT_-NO-RPSRX_ALL	3.60E-06	2.21E-04	62.13	CCF of all components in group 'C63-LT_-NO-RPSRX'
C63-MOD-FO-ESFCTTMPA	1.09E-04	5.56E-06	1.05	TRANSDUCER SIGNAL CONVERTER FAILS
C63-MOD-FO-ESFCTTMPB	1.09E-04	5.56E-06	1.05	TRANSDUCER SIGNAL CONVERTER FAILS
C63-MOD-FO-ESFCTTMPC	1.09E-04	5.56E-06	1.05	TRANSDUCER SIGNAL CONVERTER FAILS
C63-MOD-FO-ESFCTTMPD	1.09E-04	5.56E-06	1.05	TRANSDUCER SIGNAL CONVERTER FAILS
C63-MOD-FO-ESFRXLVLA	1.09E-04	5.56E-06	1.05	TRANSDUCER SIGNAL CONVERTER FAILS
C63-MOD-FO-ESFRXLVLB	1.09E-04	5.56E-06	1.05	TRANSDUCER SIGNAL CONVERTER FAILS
C63-MOD-FO-ESFRXLVLC	1.09E-04	5.56E-06	1.05	TRANSDUCER SIGNAL CONVERTER FAILS
C63-MOD-FO-ESFRXLVLD	1.09E-04	5.56E-06	1.05	TRANSDUCER SIGNAL CONVERTER FAILS
C63-PSP-FO-ATWEP_ALL	3.60E-07	8.09E-07	3.25	CCF of all components in group 'C63-PSP-FO-ATWEP'
C63-PSP-FO-ESFEP_ALL	3.60E-07	1.60E-04	443.48	CCF of all components in group 'C63-PSP-FO-ESFEP'
C63-PT_-NO-ATWRX_1_2_3	6.40E-08	1.57E-07	3.24	CCF of three components: C63-PT_-NO-ATWSRXPRSA & C63-PT_-NO-ATWSRXPRSB & C63-PT_

Table 14.6-4

High Wind At-Power Importance Measure Report

Core Damage Frequency = 8.51E-09

Event Name	Probability	Fus Ves	RAW	Description
C63-PT_-NO-ATWRX_1_2_4	6.40E-08	1.57E-07	3.24	CCF of three components: C63-PT_-NO-ATWSRXPRSA & C63-PT_-NO-ATWSRXPRSB & C63-PT_
C63-PT_-NO-ATWRX_1_3_4	6.40E-08	1.57E-07	3.24	CCF of three components: C63-PT_-NO-ATWSRXPRSA & C63-PT_-NO-ATWSRXPRSC & C63-PT_
C63-PT_-NO-ATWRX_2_3_4	6.40E-08	1.57E-07	3.24	CCF of three components: C63-PT_-NO-ATWSRXPRSB & C63-PT_-NO-ATWSRXPRSC & C63-PT_
C63-PT_-NO-ATWRX_ALL	1.73E-06	3.86E-06	3.24	CCF of all components in group 'C63-PT_-NO-ATWRX'
C63-PT_-NO-ESFRX_1_2_3	6.40E-08	5.14E-06	81.18	CCF of three components: C63-PT_-NO-ESFRXPRSA & C63-PT_-NO-ESFRXPRSB & C63-PT_-N
C63-PT_-NO-ESFRX_1_2_4	6.40E-08	5.14E-06	81.18	CCF of three components: C63-PT_-NO-ESFRXPRSA & C63-PT_-NO-ESFRXPRSB & C63-PT_-N
C63-PT_-NO-ESFRX_1_3_4	6.40E-08	5.14E-06	81.18	CCF of three components: C63-PT_-NO-ESFRXPRSA & C63-PT_-NO-ESFRXPRSC & C63-PT_-N
C63-PT_-NO-ESFRX_2_3_4	6.40E-08	5.14E-06	81.18	CCF of three components: C63-PT_-NO-ESFRXPRSB & C63-PT_-NO-ESFRXPRSC & C63-PT_-N
C63-PT_-NO-ESFRX_ALL	1.73E-06	1.50E-04	87.84	CCF of all components in group 'C63-PT_-NO-ESFRX'
C63-TT_-NO-ESFTEMPA	2.52E-05	1.25E-06	1.05	TEMPERATURE A FAILS
C63-TT_-NO-ESFTEMPB	2.52E-05	1.25E-06	1.05	TEMPERATURE B FAILS
C63-TT_-NO-ESFTEMPC	2.52E-05	1.25E-06	1.05	TEMPERATURE C FAILS
C63-TT_-NO-ESFTEMPD	2.52E-05	1.25E-06	1.05	TEMPERATURE D FAILS
C71-ACT-FC_ALL	5.76E-07	1.31E-06	3.24	CCF of all components in group 'C71-ACT-FC'
C71-ACT-FC-S_ALL	5.76E-07	1.31E-06	3.24	CCF of all components in group 'C71-ACT-FC-S'

Table 14.6-4

High Wind At-Power Importance Measure Report

Core Damage Frequency = 8.51E-09

Event Name	Probability	Fus Ves	RAW	Description
C71-CCFSOFTWARE	1.00E-04	6.63E-03	67.21	RPS COMMON CAUSE SOFTWARE FAILURE
C71-DTM-FC-R_1_2	1.11E-05	7.31E-07	1.06	CCF of two components: C71-DTM-FC-RPSDIV1 & C71-DTM-FC-RPSDIV2
C71-DTM-FC-R_1_2_3	1.11E-06	6.62E-05	60.55	CCF of three components: C71-DTM-FC-RPSDIV1 & C71-DTM-FC-RPSDIV2 & C71-DTM-FC-RP
C71-DTM-FC-R_1_2_4	1.11E-06	6.62E-05	60.55	CCF of three components: C71-DTM-FC-RPSDIV1 & C71-DTM-FC-RPSDIV2 & C71-DTM-FC-RP
C71-DTM-FC-R_1_3	1.11E-05	7.31E-07	1.06	CCF of two components: C71-DTM-FC-RPSDIV1 & C71-DTM-FC-RPSDIV3
C71-DTM-FC-R_1_3_4	1.11E-06	6.62E-05	60.55	CCF of three components: C71-DTM-FC-RPSDIV1 & C71-DTM-FC-RPSDIV3 & C71-DTM-FC-RP
C71-DTM-FC-R_1_4	1.11E-05	7.31E-07	1.06	CCF of two components: C71-DTM-FC-RPSDIV1 & C71-DTM-FC-RPSDIV4
C71-DTM-FC-R_2_3	1.11E-05	7.31E-07	1.06	CCF of two components: C71-DTM-FC-RPSDIV2 & C71-DTM-FC-RPSDIV3
C71-DTM-FC-R_2_3_4	1.11E-06	6.62E-05	60.55	CCF of three components: C71-DTM-FC-RPSDIV2 & C71-DTM-FC-RPSDIV3 & C71-DTM-FC-RP
C71-DTM-FC-R_2_4	1.11E-05	7.31E-07	1.06	CCF of two components: C71-DTM-FC-RPSDIV2 & C71-DTM-FC-RPSDIV4
C71-DTM-FC-R_3_4	1.11E-05	7.31E-07	1.06	CCF of two components: C71-DTM-FC-RPSDIV3 & C71-DTM-FC-RPSDIV4
C71-DTM-FC-R_ALL	3.00E-05	1.94E-03	65.63	CCF of all components in group 'C71-DTM-FC-R'
C71-DTM-FC-RPSDIV1	6.00E-04	1.10E-06	1	DIGITAL TRIP MODULE FAILS TO FUNCTION
C71-DTM-FC-RPSDIV2	6.00E-04	1.10E-06	1	DIGITAL TRIP MODULE FAILS TO FUNCTION
C71-DTM-FC-RPSDIV3	6.00E-04	1.10E-06	1	DIGITAL TRIP MODULE FAILS TO FUNCTION
C71-DTM-FC-RPSDIV4	6.00E-04	1.10E-06	1	DIGITAL TRIP MODULE FAILS TO FUNCTION
C71-OLU-FC-R_5_6	2.86E-06	2.61E-07	1.09	CCF of two components: C71-OLU-FC-RPSDIV1 & C71-OLU-FC-RPSDIV2
C71-OLU-FC-R_5_6_7	9.52E-08	5.53E-06	58.86	CCF of three components: C71-OLU-FC-RPSDIV1 & C71-OLU-FC-RPSDIV2 & C71-OLU-FC-RP
C71-OLU-FC-R_5_6_8	9.52E-08	5.53E-06	58.86	CCF of three components: C71-OLU-FC-RPSDIV1 & C71-OLU-FC-RPSDIV2 & C71-OLU-FC-RP
C71-OLU-FC-R_5_7	2.86E-06	2.61E-07	1.09	CCF of two components: C71-OLU-FC-RPSDIV1 & C71-OLU-FC-RPSDIV3

Table 14.6-4

High Wind At-Power Importance Measure Report

Core Damage Frequency = 8.51E-09

Event Name	Probability	Fus Ves	RAW	Description
C71-OLU-FC-R_5_7_8	9.52E-08	5.53E-06	58.86	CCF of three components: C71-OLU-FC-RPSDIV1 & C71-OLU-FC-RPSDIV3 & C71-OLU-FC-RP
C71-OLU-FC-R_5_8	2.86E-06	2.61E-07	1.09	CCF of two components: C71-OLU-FC-RPSDIV1 & C71-OLU-FC-RPSDIV4
C71-OLU-FC-R_6_7	2.86E-06	2.61E-07	1.09	CCF of two components: C71-OLU-FC-RPSDIV2 & C71-OLU-FC-RPSDIV3
C71-OLU-FC-R_6_7_8	9.52E-08	5.53E-06	58.86	CCF of three components: C71-OLU-FC-RPSDIV2 & C71-OLU-FC-RPSDIV3 & C71-OLU-FC-RP
C71-OLU-FC-R_6_8	2.86E-06	2.61E-07	1.09	CCF of two components: C71-OLU-FC-RPSDIV2 & C71-OLU-FC-RPSDIV4
C71-OLU-FC-R_7_8	2.86E-06	2.61E-07	1.09	CCF of two components: C71-OLU-FC-RPSDIV3 & C71-OLU-FC-RPSDIV4
C71-OLU-FC-R_ALL	1.80E-05	1.15E-03	64.76	CCF of all components in group 'C71-OLU-FC-R'
C71-OLU-FC-RPSDIV1	3.60E-04	9.40E-07	1	RPS DIV I OUPUT LOGIC UNIT FAILS TO GENERATE TRIP SIGNAL
C71-OLU-FC-RPSDIV2	3.60E-04	9.40E-07	1	RPS DIV II OUPUT LOGIC UNIT FAILS TO GENERATE TRIP SIGNAL
C71-OLU-FC-RPSDIV3	3.60E-04	9.40E-07	1	RPS DIV III OUPUT LOGIC UNIT FAILS TO GENERATE TRIP SIGNAL
C71-OLU-FC-RPSDIV4	3.60E-04	9.40E-07	1	RPS DIV IV OUPUT LOGIC UNIT FAILS TO GENERATE TRIP SIGNAL
C71-SLU-FC-N_1_2_3	1.67E-06	3.73E-06	3.23	CCF of three components: C71-SLU-FC-NMSDIV1 & C71-SLU-FC-NMSDIV2 & C71-SLU-FC-NM
C71-SLU-FC-N_1_2_4	1.67E-06	3.73E-06	3.23	CCF of three components: C71-SLU-FC-NMSDIV1 & C71-SLU-FC-NMSDIV2 & C71-SLU-FC-NM
C71-SLU-FC-N_1_3_4	1.67E-06	3.73E-06	3.23	CCF of three components: C71-SLU-FC-NMSDIV1 & C71-SLU-FC-NMSDIV3 & C71-SLU-FC-NM
C71-SLU-FC-N_2_3_4	1.67E-06	3.73E-06	3.23	CCF of three components: C71-SLU-FC-NMSDIV2 & C71-SLU-FC-NMSDIV3 & C71-SLU-FC-NM
C71-SLU-FC-N_ALL	4.50E-05	1.01E-04	3.25	CCF of all components in group 'C71-SLU-FC-N'
C71-SLU-FC-R_1_2	1.67E-05	2.19E-06	1.13	CCF of two components: C71-SLU-FC-RPSDIV1 & C71-SLU-FC-RPSDIV2
C71-SLU-FC-R_1_2_3	1.67E-06	9.93E-05	60.54	CCF of three components: C71-SLU-FC-RPSDIV1 & C71-SLU-FC-RPSDIV2 & C71-SLU-FC-RP
C71-SLU-FC-R_1_2_4	1.67E-06	9.93E-05	60.54	CCF of three components: C71-SLU-FC-RPSDIV1 & C71-SLU-FC-RPSDIV2 & C71-SLU-FC-RP

Table 14.6-4

High Wind At-Power Importance Measure Report

Core Damage Frequency = 8.51E-09

Event Name	Probability	Fus Ves	RAW	Description
C71-SLU-FC-R_1_3	1.67E-05	2.19E-06	1.13	CCF of two components: C71-SLU-FC-RPSDIV1 & C71-SLU-FC-RPSDIV3
C71-SLU-FC-R_1_3_4	1.67E-06	9.93E-05	60.54	CCF of three components: C71-SLU-FC-RPSDIV1 & C71-SLU-FC-RPSDIV3 & C71-SLU-FC-RP
C71-SLU-FC-R_1_4	1.67E-05	2.19E-06	1.13	CCF of two components: C71-SLU-FC-RPSDIV1 & C71-SLU-FC-RPSDIV4
C71-SLU-FC-R_2_3	1.67E-05	2.19E-06	1.13	CCF of two components: C71-SLU-FC-RPSDIV2 & C71-SLU-FC-RPSDIV3
C71-SLU-FC-R_2_3_4	1.67E-06	9.93E-05	60.54	CCF of three components: C71-SLU-FC-RPSDIV2 & C71-SLU-FC-RPSDIV3 & C71-SLU-FC-RP
C71-SLU-FC-R_2_4	1.67E-05	2.19E-06	1.13	CCF of two components: C71-SLU-FC-RPSDIV2 & C71-SLU-FC-RPSDIV4
C71-SLU-FC-R_3_4	1.67E-05	2.19E-06	1.13	CCF of two components: C71-SLU-FC-RPSDIV3 & C71-SLU-FC-RPSDIV4
C71-SLU-FC-R_ALL	4.50E-05	2.94E-03	66.22	CCF of all components in group 'C71-SLU-FC-R'
C71-SLU-FC-RPSDIV1	9.00E-04	2.74E-06	1	RPS DIV I TLU FAILS
C71-SLU-FC-RPSDIV2	9.00E-04	2.74E-06	1	RPS DIV II TLU FAILS
C71-SLU-FC-RPSDIV3	9.00E-04	2.74E-06	1	RPS DIV III TLU FAILS
C71-SLU-FC-RPSDIV4	9.00E-04	2.74E-06	1	RPS DIV IV TLU FAILS
C71-XHE-FO-SCRAM	1.00E-01	1.36E-02	1.12	OPERATOR FAILS TO PERFORM MANUAL SCRAM
C72-CCFSOFTWARE	1.00E-04	1.53E-01	1.54E+03	COMMON CAUSE FAILURE OF DPS PROCESSORS
C72-LDD-FC-LOADS	1.86E-06	2.86E-03	1.54E+03	COMMON CAUSE FAILURE OF DPS LOAD DRIVERS
C72-LDD-FC-S1AB32P1	1.09E-03	9.56E-06	1.01	VALVE F104A FIRST LOAD DRIVER FAILS TO ACTUATE
C72-LDD-FC-S1BB32P2	1.09E-03	9.56E-06	1.01	VALVE F104B FIRST LOAD DRIVER FAILS TO ACTUATE
C72-LDD-FC-S1F006A	1.09E-03	8.15E-06	1.01	F006A FIRST SERIES LOAD DRIVER FAILS ACTUATE
C72-LDD-FC-S1F006B	1.09E-03	8.15E-06	1.01	F006B FIRST SERIES LOAD DRIVER FAILS ACTUATE
C72-LDD-FC-S1F006C	1.09E-03	8.15E-06	1.01	F006C FIRST SERIES LOAD DRIVER FAILS ACTUATE
C72-LDD-FC-S1F006D	1.09E-03	8.15E-06	1.01	F006D FIRST SERIES LOAD DRIVER FAILS ACTUATE
C72-LDD-FC-S1G31F3A	1.09E-03	2.61E-07	1	RWCU/SDC F003A FIRST SERIES LOAD DRIVER FAILS TO ACTUATE
C72-LDD-FC-S1G31F8A	1.09E-03	2.61E-07	1	RWCU/SDC F008A FIRST SERIES LOAD DRIVER FAILS TO ACTUATE

Table 14.6-4

High Wind At-Power Importance Measure Report

Core Damage Frequency = 8.51E-09

Event Name	Probability	Fus Ves	RAW	Description
C72-LDD-FC-S1XB32P1	1.09E-03	1.99E-05	1.02	VALVE F105A FIRST LOAD DRIVER FAILS TO ACTUATE
C72-LDD-FC-S1YB32P2	1.09E-03	1.99E-05	1.02	VALVE F105B FIRST LOAD DRIVER FAILS TO ACTUATE
C72-LDD-FC-S2AB32P1	1.09E-03	9.56E-06	1.01	VALVE F104A SECOND LOAD DRIVER FAILS TO ACTUATE
C72-LDD-FC-S2BB32P2	1.09E-03	9.56E-06	1.01	VALVE F104B SECOND LOAD DRIVER FAILS TO ACTUATE
C72-LDD-FC-S2F006A	1.09E-03	8.15E-06	1.01	F006A SECOND SERIES LOAD DRIVER FAILS TO ACTUATE
C72-LDD-FC-S2F006B	1.09E-03	8.15E-06	1.01	F006B SECOND SERIES LOAD DRIVER FAILS TO ACTUATE
C72-LDD-FC-S2F006C	1.09E-03	8.15E-06	1.01	F006C SECOND SERIES LOAD DRIVER FAILS TO ACTUATE
C72-LDD-FC-S2F006D	1.09E-03	8.15E-06	1.01	F006D SECOND SERIES LOAD DRIVER FAILS TO ACTUATE
C72-LDD-FC-S2G31F3A	1.09E-03	2.61E-07	1	RWCU/SDC F003A SECOND SERIES LOAD DRIVER FAILS TO ACTUATE
C72-LDD-FC-S2G31F8A	1.09E-03	2.61E-07	1	RWCU/SDC F008A SECOND SERIES LOAD DRIVER FAILS TO ACTUATE
C72-LDD-FC-S2XB32P1	1.09E-03	1.99E-05	1.02	VALVE F105A SECOND LOAD DRIVER FAILS TO ACTUATE
C72-LDD-FC-S2YB32P2	1.09E-03	1.99E-05	1.02	VALVE F105B SECOND LOAD DRIVER FAILS TO ACTUATE
C72-LDD-FC-S3AB32P1	1.09E-03	9.56E-06	1.01	VALVE F104A SECOND LOAD DRIVER FAILS TO ACTUATE
C72-LDD-FC-S3BB32P2	1.09E-03	9.56E-06	1.01	LOAD DRIVER FAILS DURING OPERATION
C72-LOG-FC-D_1_2	1.00E-05	1.53E-02	1.53E+03	CCF of two components: C72-LOG-FC-D1DPS & C72-LOG-FC-D2DPS
C72-LOG-FC-D_1_2_3	2.00E-06	3.05E-03	1.53E+03	CCF of three components: C72-LOG-FC-D1DPS & C72-LOG-FC-D2DPS & C72-LOG-FC-D3DPS
C72-LOG-FC-D_1_3	1.00E-05	1.53E-02	1.53E+03	CCF of two components: C72-LOG-FC-D1DPS & C72-LOG-FC-D3DPS
C72-LOG-FC-D_2_3	1.00E-05	1.53E-02	1.53E+03	CCF of two components: C72-LOG-FC-D2DPS & C72-LOG-FC-D3DPS
C72-LOG-FC-D1DPS	3.60E-04	3.93E-04	2.09	LOGIC UNIT FAILS TO FUNCTION
C72-LOG-FC-D2DPS	3.60E-04	3.93E-04	2.09	LOGIC UNIT FAILS TO FUNCTION
C72-LOG-FC-D3DPS	3.60E-04	3.93E-04	2.09	LOGIC UNIT FAILS TO FUNCTION
C74-ATM-FC-L2_1_2_3	1.85E-07	4.18E-07	3.26	CCF of three components: C74-ATM-FC-LDIV1 & C74-ATM-FC-LDIV2 & C74-ATM-FC-LDIV3
C74-ATM-FC-L2_1_2_4	1.85E-07	4.18E-07	3.26	CCF of three components: C74-ATM-FC-LDIV1 & C74-ATM-FC-LDIV2 & C74-ATM-FC-LDIV4

Table 14.6-4

High Wind At-Power Importance Measure Report

Core Damage Frequency = 8.51E-09

Event Name	Probability	Fus Ves	RAW	Description
C74-ATM-FC-L2_1_3_4	1.85E-07	4.18E-07	3.26	CCF of three components: C74-ATM-FC-LDIV1 & C74-ATM-FC-LDIV3 & C74-ATM-FC-LDIV4
C74-ATM-FC-L2_2_3_4	1.85E-07	4.18E-07	3.26	CCF of three components: C74-ATM-FC-LDIV2 & C74-ATM-FC-LDIV3 & C74-ATM-FC-LDIV4
C74-ATM-FC-L2_ALL	5.00E-06	1.12E-05	3.23	CCF of all components in group 'C74-ATM-FC-L2'
C74-ATM-FC-PR_1_2_3	1.85E-07	4.18E-07	3.26	CCF of three components: C74-ATM-FC-PDIV1 & C74-ATM-FC-PDIV2 & C74-ATM-FC-PDIV3
C74-ATM-FC-PR_1_2_4	1.85E-07	4.18E-07	3.26	CCF of three components: C74-ATM-FC-PDIV1 & C74-ATM-FC-PDIV2 & C74-ATM-FC-PDIV4
C74-ATM-FC-PR_1_3_4	1.85E-07	4.18E-07	3.26	CCF of three components: C74-ATM-FC-PDIV1 & C74-ATM-FC-PDIV3 & C74-ATM-FC-PDIV4
C74-ATM-FC-PR_2_3_4	1.85E-07	4.18E-07	3.26	CCF of three components: C74-ATM-FC-PDIV2 & C74-ATM-FC-PDIV3 & C74-ATM-FC-PDIV4
C74-ATM-FC-PR_ALL	5.00E-06	1.12E-05	3.23	CCF of all components in group 'C74-ATM-FC-PR'
C74-LOG-FC-AT-_1_2_3	6.67E-07	1.49E-06	3.23	CCF of three components: C74-LOG-FC-ATWSD1 & C74-LOG-FC-ATWSD2 & C74-LOG-FC-ATWS
C74-LOG-FC-AT-_1_2_4	6.67E-07	1.49E-06	3.23	CCF of three components: C74-LOG-FC-ATWSD1 & C74-LOG-FC-ATWSD2 & C74-LOG-FC-ATWS
C74-LOG-FC-AT-_1_3_4	6.67E-07	1.49E-06	3.23	CCF of three components: C74-LOG-FC-ATWSD1 & C74-LOG-FC-ATWSD3 & C74-LOG-FC-ATWS
C74-LOG-FC-AT-_2_3_4	6.67E-07	1.49E-06	3.23	CCF of three components: C74-LOG-FC-ATWSD2 & C74-LOG-FC-ATWSD3 & C74-LOG-FC-ATWS
C74-LOG-FC-AT-_ALL	1.80E-05	4.02E-05	3.23	CCF of all components in group 'C74-LOG-FC-AT-'
E50-BV_-OC-F004A	2.63E-04	1.57E-07	1	MAINTENANCE VALVE F004A PLUGS/TRANSFERS CLOSED
E50-BV_-OC-F004D	2.63E-04	1.57E-07	1	MAINTENANCE VALVE F004D PLUGS/TRANSFERS CLOSED
E50-SQV-CC-INJ_ALL	1.50E-04	1.14E-01	759	CCF of all components in group 'E50-SQV-CC-INJ'
E50-UV_-CC-INJ_ALL	1.72E-05	1.29E-02	752.02	CCF of all components in group 'E50-UV_-CC-INJ'
E50-XHE-FO-EQU	1.61E-03	1.54E-06	1	OPERATOR FAILS TO ACTUATE GDCS

Table 14.6-4

High Wind At-Power Importance Measure Report

Core Damage Frequency = 8.51E-09

Event Name	Probability	Fus Ves	RAW	Description
G21-MOV-CC-2_1_2	4.44E-04	6.08E-04	2.36	CCF of two components: G21-MOV-CC-F332A & G21-MOV-CC-F332B
G21-MOV-CC-F332A	4.00E-03	2.13E-05	1.01	MOTOR OPERATED VALVE FAILS TO OPEN
G21-MOV-CC-F332B	4.00E-03	2.13E-05	1.01	MOTOR OPERATED VALVE FAILS TO OPEN
G21-MP_-FR-PLP	6.00E-04	6.58E-06	1.01	MOTOR-DRIVEN LPI PUMP FAILS TO RUN
G21-MP_-FS-PLP	2.00E-03	4.00E-05	1.02	MOTOR-DRIVEN LPI PUMP FAILS TO START
G21-NSC-TM-F332A	1.50E-03	4.80E-06	1	MAINTENANCE FOR VALVE F332A
G21-NSC-TM-F332B	1.50E-03	4.80E-06	1	MAINTENANCE FOR VALVE F332B
G21-NST-TM-TRAINB	9.00E-03	1.38E-06	1	TRAIN B IN MAINTENANCE
G21-UV_-CC-A_1_2	2.99E-06	1.67E-06	1.54	CCF of two components: G21-UV_-CC-F333A & G21-UV_-CC-F333B
G21-UV_-CC-F427A	1.00E-04	2.30E-06	1.02	CHECK VALVE FAILS TO OPEN
G21-UV_-CC-F427B	1.00E-04	2.30E-06	1.02	CHECK VALVE FAILS TO OPEN
G21-UV_-OO-F331A	1.00E-03	1.12E-05	1.01	CHECK VALVE F331A FAILS TO CLOSE
G21-UV_-OO-F331B	1.00E-03	1.12E-05	1.01	CHECK VALVE F331B FAILS TO CLOSE
G21-XHE-FO-LPCI	1.61E-03	7.00E-06	1	OPERATOR FAILS TO ALIGN AND ACTUATE FAPCS IN LPCI MODE
G21-XHE-FO-RSPC	1.61E-02	1.41E-06	1	OPERATOR FAILS TO RECOG. NEED FOR SPC
G31-ACV-OO-F002A	2.00E-03	9.50E-06	1	NOV F002A FAILS TO CLOSE
G31-ACV-OO-F003A	2.00E-03	1.01E-05	1.01	ACV F003A FAILS TO CLOSE
G31-ACV-OO-F007A	2.00E-03	9.50E-06	1	NOV F007A FAILS TO CLOSE
G31-ACV-OO-F008A	2.00E-03	1.01E-05	1.01	ACV F008A FAILS TO CLOSE
NICWSA-SYS-FAILS	1.00E-03	2.47E-05	1.02	NUCLEAR ISLAND CHILLED WATER SUBSYSTEM TRAIN A FAILS
NICWSB-SYS-FAILS	1.00E-03	3.31E-05	1.03	NUCLEAR ISLAND CHILLED WATER SUBSYSTEM TRAIN B FAILS
P21-ACV-CC-F0023_1_2	1.93E-04	5.00E-05	1.26	CCF of two components: P21-ACV-CC-F0023A & P21-ACV-CC-F0023B
P21-ACV-CC-F0023A	2.00E-03	6.27E-05	1.03	AIR OPERATED VALVE F0023A FAILS TO OPEN
P21-ACV-CC-F0023B	2.00E-03	7.95E-05	1.04	AIR OPERATED VALVE F0023B FAILS TO OPEN

Table 14.6-4

High Wind At-Power Importance Measure Report

Core Damage Frequency = 8.51E-09

Event Name	Probability	Fus Ves	RAW	Description
P21-ACV-OO-CCF23_1_2	2.22E-04	5.80E-05	1.26	CCF of two components: P21-ACV-OO-F023A & P21-ACV-OO-F023B
P21-ACV-OO-F0004	2.00E-03	7.19E-04	1.36	AIR OPERATED VALVE F0004 FAILS TO CLOSE
P21-ACV-OO-F0016_1_2	1.93E-04	5.00E-05	1.26	CCF of two components: P21-ACV-OO-F016A & P21-ACV-OO-F016B
P21-ACV-OO-F0027	2.00E-03	7.19E-04	1.36	AIR OPERATED VALVE F0027 FAILS TO CLOSE
P21-ACV-OO-F0061	2.00E-03	7.19E-04	1.36	AIR OPERATED VALVE F0061 FAILS TO CLOSE
P21-ACV-OO-F016A	2.00E-03	6.27E-05	1.03	AIR OPERATED VALVE F016A FAILS TO CLOSE
P21-ACV-OO-F016B	2.00E-03	7.95E-05	1.04	AIR OPERATED VALVE F016B FAILS TO CLOSE
P21-ACV-OO-F023A	2.00E-03	6.27E-05	1.03	AIR OPERATED VALVE FAILS TO CLOSE
P21-ACV-OO-F023B	2.00E-03	7.95E-05	1.04	AIR OPERATED VALVE FAILS TO CLOSE
P21-ACV-OO-XTIE_1_2	5.92E-06	4.70E-07	1.07	CCF of two components: P21-ACV-OO-F0004 & P21-ACV-OO-F0027
P21-ACV-OO-XTIE_1_2_3	1.57E-04	3.93E-05	1.25	CCF of three components: P21-ACV-OO-F0004 & P21-ACV-OO-F0027 & P21-ACV-OO-F0061
P21-ACV-OO-XTIE_1_3	5.92E-06	4.70E-07	1.07	CCF of two components: P21-ACV-OO-F0004 & P21-ACV-OO-F0061
P21-ACV-OO-XTIE_2_3	5.92E-06	4.70E-07	1.07	CCF of two components: P21-ACV-OO-F0027 & P21-ACV-OO-F0061
P21-AHU-FR_1_2	1.26E-05	8.62E-07	1.07	CCF of two components: P21-AHU-FR-RCCWA & P21-AHU-FR-RCCWB
P21-AHU-FR-RCCWA	2.40E-04	1.85E-06	1.01	AIR HANDLING UNIT RCCWS ROOM A FAILS TO RUN
P21-AHU-FR-RCCWB	2.40E-04	2.64E-06	1.01	AIR HANDLING UNIT RCCWS ROOM TRAIN B FAILS TO RUN
P21-AHU-FS_1_2	6.67E-04	2.16E-04	1.32	CCF of two components: P21-AHU-FS-RCCWA & P21-AHU-FS-RCCWB
P21-AHU-FS-RCCWA	6.00E-03	2.88E-04	1.05	AIR HANDLING UNIT RCCWS ROOM A FAILS TO START
P21-AHU-FS-RCCWB	6.00E-03	3.46E-04	1.06	AIR HANDLING UNIT RCCWS ROOM B FAILS TO START
P21-MOV-CC_ALL	1.48E-04	3.67E-05	1.25	CCF of all components in group 'P21-MOV-CC'
P21-MOV-CC-F0010A1	4.00E-03	1.74E-04	1.04	MOTOR OPERATED VALVE F0010A1 FAILS TO OPEN
P21-MOV-CC-F0010A2	4.00E-03	1.74E-04	1.04	MOTOR OPERATED VALVE F0010A2 FAILS TO OPEN
P21-MOV-CC-F0010A3	4.00E-03	1.74E-04	1.04	MOTOR OPERATED VALVE F0010A3 FAILS TO OPEN

Table 14.6-4

High Wind At-Power Importance Measure Report

Core Damage Frequency = 8.51E-09

Event Name	Probability	Fus Ves	RAW	Description
P21-MOV-CC-F0010B1	4.00E-03	2.12E-04	1.05	MOTOR OPERATED VALVE F0010B1 FAILS TO OPEN
P21-MOV-CC-F0010B2	4.00E-03	2.12E-04	1.05	MOTOR OPERATED VALVE F0010B2 FAILS TO OPEN
P21-MOV-CC-F0010B3	4.00E-03	2.12E-04	1.05	MOTOR OPERATED VALVE F0010B3 FAILS TO OPEN
P21-MP_-FR_ALL	1.33E-05	1.07E-06	1.08	CCF of all components in group 'P21-MP_-FR'
P21-MP_-FS_ALL	1.56E-04	3.90E-05	1.25	CCF of all components in group 'P21-MP_-FS'
P21-MPC-FR-C001A	6.00E-04	1.02E-05	1.02	MOTOR DRIVEN PUMP C001A FAILS TO RUN
P21-MPC-FR-C001B	6.00E-04	1.49E-05	1.02	MOTOR DRIVEN PUMP C001B FAILS TO RUN
P21-MPC-FR-C002A	6.00E-04	1.02E-05	1.02	MOTOR-DRIVEN PUMP C002A FAILS TO RUN
P21-MPC-FR-C002B	6.00E-04	1.49E-05	1.02	MOTOR-DRIVEN PUMP C002B FAILS TO RUN
P21-MPC-FR-C003A	6.00E-04	1.02E-05	1.02	MOTOR-DRIVEN PUMP C0003A FAILS TO RUN
P21-MPC-FR-C003B	6.00E-04	1.49E-05	1.02	MOTOR-DRIVEN PUMP C003B FAILS TO RUN
P21-MPC-FS-C001A	2.00E-03	6.27E-05	1.03	MOTOR DRIVEN PUMP C001A FAILS TO START
P21-MPC-FS-C001B	2.00E-03	7.95E-05	1.04	MOTOR-DRIVEN PUMP C001B FAILS TO START
P21-MPC-FS-C002A	2.00E-03	6.27E-05	1.03	MOTOR-DRIVEN PUMP C002A FAILS TO START
P21-MPC-FS-C002B	2.00E-03	7.95E-05	1.04	MOTOR-DRIVEN PUMP C002B FAILS TO START
P21-MPC-FS-C003A	2.00E-03	6.27E-05	1.03	MOTOR-DRIVEN PUMP C0003A FAILS TO START
P21-MPC-FS-C003B	2.00E-03	7.95E-05	1.04	MOTOR-DRIVEN PUMP C003B FAILS TO START
P21-NSC-TM-B001A	1.50E-03	4.20E-05	1.03	HEAT EXCHANGER B001A UNAVAILABLE DUE TO MAINTENANCE
P21-NSC-TM-B001B	1.50E-03	5.47E-05	1.04	HEAT EXCHANGER B001B UNAVAILABLE DUE TO MAINTENANCE
P21-NSC-TM-B002A	1.50E-03	4.20E-05	1.03	HEAT EXCHANGER B002A UNAVAILABLE DUE TO MAINTENANCE
P21-NSC-TM-B002B	1.50E-03	5.47E-05	1.04	HEAT EXCHANGER B002B UNAVAILABLE DUE TO MAINTENANCE
P21-NSC-TM-B003A	1.50E-03	4.20E-05	1.03	HEAT EXCHANGER B003A UNAVAILABLE DUE TO MAINTENANCE
P21-NSC-TM-B003B	1.50E-03	5.47E-05	1.04	HEAT EXCHANGER B003B UNAVAILABLE DUE TO MAINTENANCE
P21-NSC-TM-C001A	1.50E-03	4.20E-05	1.03	PUMP C001A IN MAINTENANCE
P21-NSC-TM-C001B	1.50E-03	5.47E-05	1.04	PUMP C001B IN MAINTENANCE

Table 14.6-4

High Wind At-Power Importance Measure Report

Core Damage Frequency = 8.51E-09

Event Name	Probability	Fus Ves	RAW	Description
P21-NSC-TM-C002A	1.50E-03	4.20E-05	1.03	PUMP C002A IN MAINTENANCE
P21-NSC-TM-C002B	1.50E-03	5.47E-05	1.04	PUMP C002B IN MAINTENANCE
P21-NSC-TM-C003A	1.50E-03	4.20E-05	1.03	PUMP C003A IN MAINTENANCE
P21-NSC-TM-C003B	1.50E-03	5.47E-05	1.04	PUMP C003B IN MAINTENANCE
P21-NSC-TM-TRAINBHX	7.50E-05	2.61E-07	1	RCCW HXS IN TEST OR MAINTENANCE TRAIN B
P21-NSC-TM-TRAINBPUMP	7.50E-05	2.61E-07	1	RCCW PUMPS IN TEST OR MAINTENANCE TRAIN B
P21-TRN-RE-HX1A	8.07E-03	4.21E-04	1.05	FAILURE TO RESTORE RCCW TRAIN 1A HX
P21-TRN-RE-HX1B	8.07E-03	5.01E-04	1.06	FAILURE TO RESTORE RCCW TRAIN 1B HX
P21-TRN-RE-HX2A	8.07E-03	4.21E-04	1.05	FAILURE TO RESTORE RCCW TRAIN 2A HX
P21-TRN-RE-HX2B	8.07E-03	5.01E-04	1.06	FAILURE TO RESTORE RCCW TRAIN 2B HX
P21-TRN-RE-HX3A	8.07E-03	4.21E-04	1.05	FAILURE TO RESTORE RCCW TRAIN 3A HX
P21-TRN-RE-HX3B	8.07E-03	5.01E-04	1.06	FAILURE TO RESTORE RCCW TRAIN 3B HX
P21-TRN-RE-PUMP1A	8.07E-03	4.21E-04	1.05	FAILURE TO RESTORE RCCW TRAIN 1A PUMP
P21-TRN-RE-PUMP1B	8.07E-03	5.01E-04	1.06	FAILURE TO RESTORE RCCW TRAIN 1B PUMP
P21-TRN-RE-PUMP2A	8.07E-03	4.21E-04	1.05	FAILURE TO RESTORE RCCW TRAIN 2A PUMP
P21-TRN-RE-PUMP2B	8.07E-03	5.01E-04	1.06	FAILURE TO RESTORE RCCW TRAIN 2B PUMP
P21-TRN-RE-PUMP3A	8.07E-03	4.21E-04	1.05	FAILURE TO RESTORE RCCW TRAIN 3A PUMP
P21-TRN-RE-PUMP3B	8.07E-03	5.01E-04	1.06	FAILURE TO RESTORE RCCW TRAIN 3B PUMP
P21-UV_-CC-0001A1	1.00E-04	3.92E-07	1	CHECK VALVE 0001A1 FAILS TO OPEN
P21-UV_-CC-0001A2	1.00E-04	3.92E-07	1	CHECK VALVE 0001A2 FAILS TO OPEN
P21-UV_-CC-0001A3	1.00E-04	3.92E-07	1	CHECK VALVE 0001A3 FAILS TO OPEN
P21-UV_-CC-0001B1	1.00E-04	7.05E-07	1.01	CHECK VALVE 0001B1 FAILS TO OPEN
P21-UV_-CC-0001B2	1.00E-04	7.05E-07	1.01	CHECK VALVE 0001B2 FAILS TO OPEN

Table 14.6-4

High Wind At-Power Importance Measure Report

Core Damage Frequency = 8.51E-09

Event Name	Probability	Fus Ves	RAW	Description
P21-UV_-CC-0001B3	1.00E-04	7.05E-07	1.01	CHECK VALVE 0001B3 FAILS TO OPEN
P41-ACV-CC_ALL	1.21E-04	2.80E-05	1.23	CCF of all components in group 'P41-ACV-CC'
P41-ACV-CC-F004A	2.00E-03	6.27E-05	1.03	AIR OPERATED VALVE F004A FAILS TO OPEN
P41-ACV-CC-F004B	2.00E-03	7.95E-05	1.04	AIR OPERATED VALVE F004B FAILS TO OPEN
P41-ACV-CC-F006A	2.00E-03	6.27E-05	1.03	AIR OPERATED VALVE F006A FAILS TO OPEN
P41-ACV-CC-F006B	2.00E-03	7.95E-05	1.04	AIR OPERATED VALVE F006B FAILS TO OPEN
P41-ACV-CC-F009A	2.00E-03	6.27E-05	1.03	AIR OPERATED VALVE F009A FAILS TO OPEN
P41-ACV-CC-F009B	2.00E-03	7.95E-05	1.04	AIR OPERATED VALVE F009B FAILS TO OPEN
P41-FAN-FR_ALL	1.20E-05	8.62E-07	1.07	CCF of all components in group 'P41-FAN-FR'
P41-FAN-FS_ALL	1.42E-05	1.15E-06	1.08	CCF of all components in group 'P41-FAN-FS'
P41-MOV-CC-PMP_1_2_3	1.36E-05	1.07E-06	1.08	CCF of three components: P41-MOV-CC-PMPF002A & P41-MOV-CC-PMPF002B & P41-MOV-CC-
P41-MOV-CC-PMP_1_2_4	1.36E-05	1.07E-06	1.08	CCF of three components: P41-MOV-CC-PMPF002A & P41-MOV-CC-PMPF002B & P41-MOV-CC-
P41-MOV-CC-PMP_1_3_4	1.36E-05	1.07E-06	1.08	CCF of three components: P41-MOV-CC-PMPF002A & P41-MOV-CC-PMPF004A & P41-MOV-CC-
P41-MOV-CC-PMP_2_3_4	1.36E-05	1.07E-06	1.08	CCF of three components: P41-MOV-CC-PMPF002B & P41-MOV-CC-PMPF004A & P41-MOV-CC-
P41-MOV-CC-PMP_ALL	1.45E-04	3.57E-05	1.24	CCF of all components in group 'P41-MOV-CC-PMP'
P41-MPW-FS_1_2_3	1.89E-05	1.78E-06	1.09	CCF of three components: P41-MPW-FS-C001A & P41-MPW-FS-C001B & P41-MPW-FS-C002A
P41-MPW-FS_1_2_4	1.89E-05	1.78E-06	1.09	CCF of three components: P41-MPW-FS-C001A & P41-MPW-FS-C001B & P41-MPW-FS-C002B
P41-MPW-FS_1_3_4	1.89E-05	1.78E-06	1.09	CCF of three components: P41-MPW-FS-C001A & P41-MPW-FS-C002A & P41-MPW-FS-C002B
P41-MPW-FS_2_3_4	1.89E-05	1.78E-06	1.09	CCF of three components: P41-MPW-FS-C001B & P41-MPW-FS-C002A & P41-MPW-FS-C002B

Table 14.6-4

High Wind At-Power Importance Measure Report

Core Damage Frequency = 8.51E-09

Event Name	Probability	Fus Ves	RAW	Description
P41-MPW-FS_ALL	1.15E-04	2.59E-05	1.22	CCF of all components in group 'P41-MPW-FS'
P41-STR-PG_ALL	5.68E-06	3.92E-07	1.07	CCF of all components in group 'P41-STR-PG'
P41-SYS-FC-HVACPSW-A	1.00E-03	1.10E-06	1	PSW-A ROOM COOLING FAILURE
P41-SYS-FC-HVACPSW-B	1.00E-03	1.10E-06	1	PSW-B ROOM COOLING FAILURE
P41-TRN-RE-PUMP1A	8.07E-03	1.46E-06	1	FAILURE TO RESTORE PSW PUMP 1A
P41-TRN-RE-PUMP1B	8.07E-03	1.46E-06	1	FAILURE TO RESTORE PSW PUMP 1B
P41-TRN-RE-PUMP2A	8.07E-03	1.46E-06	1	FAILURE TO RESTORE PSW PUMP 2A
P41-TRN-RE-PUMP2B	8.07E-03	1.46E-06	1	FAILURE TO RESTORE PSW PUMP 2B
R11-MCB-CC-A3RATAY	5.00E-04	4.70E-07	1	MEDIUM CIRCUIT BREAKER FOR RAT A Y-WINDING FAILS TO OPEN
R11-MCB-CC-A3UATAY	4.00E-03	1.78E-05	1	MEDIUM VOLTAGE CIRCUIT BREAKER FOR UAT A Y-WINDING FAILS TO OPEN
R11-MCB-CC-B3RATBY	5.00E-04	4.23E-06	1.01	MEDIUM CIRCUIT BREAKER FOR RAT B Y-WINDING FAILS TO OPEN
R11-MCB-CC-B3UATBY	4.00E-03	5.51E-05	1.01	MEDIUM VOLTAGE CIRCUIT BREAKER FOR UAT B Y-WINDING FAILS TO OPEN
R11-MCB-CC-CCFNORM_3_7	3.18E-05	4.18E-07	1.01	CCF of two components: R11-MCB-CC-A3RATAY & R11-MCB-CC-B3RATBY
R11-MCB-CC-CCFNORM_3_8	3.18E-05	4.18E-07	1.01	CCF of two components: R11-MCB-CC-A3RATAY & R11-MCB-CC-B3UATBY
R11-MCB-CC-CCFNORM_4_7	3.18E-05	4.18E-07	1.01	CCF of two components: R11-MCB-CC-A3UATAY & R11-MCB-CC-B3RATBY
R11-MCB-CC-CCFNORM_4_8	3.18E-05	4.18E-07	1.01	CCF of two components: R11-MCB-CC-A3UATAY & R11-MCB-CC-B3UATBY
R11-MCB-CC-CCFNORM_ALL	2.00E-04	6.66E-06	1.03	CCF of all components in group 'R11-MCB-CC-CCFNORM'
R11-MCB-OO-A3DGA	2.40E-03	8.93E-06	1	MEDIUM VOLTAGE CIRCUIT BREAKER FOR DG-A FAILS TO CLOSE

Table 14.6-4

High Wind At-Power Importance Measure Report

Core Damage Frequency = 8.51E-09

Event Name	Probability	Fus Ves	RAW	Description
R11-MCB-OO-B3DGA	2.40E-03	2.90E-05	1.01	MEDIUM VOLTAGE CIRCUIT BREAKER FOR DG-B FAILS TO CLOSE
R11-MCB-OO-CCFALT_3_7	1.91E-05	1.83E-07	1.01	CCF of two components: R11-MCB-OO-A3DGA & R11-MCB-OO-B3DGA
R11-MCB-OO-CCFALT_ALL	1.20E-04	3.71E-06	1.03	CCF of all components in group 'R11-MCB-OO-CCFALT'
R11-RE_-FO-CCFUV_ALL	4.38E-05	5.74E-07	1.01	CCF of all components in group 'R11-RE_-FO-CCFUV'
R11-RE_-FO-UV00A3	8.75E-04	1.31E-06	1	1000A3 UV RELAY FAILS TO OPERATE ON UV COND
R11-RE_-FO-UV00B3	8.75E-04	8.82E-06	1.01	1000B3 UV RELAY FAILS TO OPERATE ON UV COND
R13-INV-FC-CCFNSR_1_3	3.16E-06	6.34E-06	2.99	CCF of two components: R13-INV-FC-R13A1 & R13-INV-FC-R13B1
R13-INV-FC-CCFNSR_1_3_5	2.11E-07	3.19E-04	1.51E+03	CCF of three components: R13-INV-FC-R13A1 & R13-INV-FC-R13B1 & R13-INV-FC-R13C
R13-INV-FC-CCFNSR_1_5	3.16E-06	6.34E-06	2.99	CCF of two components: R13-INV-FC-R13A1 & R13-INV-FC-R13C
R13-INV-FC-CCFNSR_3_5	3.16E-06	6.34E-06	2.99	CCF of two components: R13-INV-FC-R13B1 & R13-INV-FC-R13C
R13-INV-FC-CCFNSR_ALL	1.14E-05	1.74E-02	1.53E+03	CCF of all components in group 'R13-INV-FC-CCFNSR'
R13-INV-FC-CCFSR_1_3_5	6.01E-08	6.27E-07	11.42	CCF of three components: R13-INV-FC-R1311 & R13-INV-FC-R1321 & R13-INV-FC-R1331
R13-INV-FC-CCFSR_1_3_6	6.01E-08	6.27E-07	11.42	CCF of three components: R13-INV-FC-R1311 & R13-INV-FC-R1321 & R13-INV-FC-R1332
R13-INV-FC-CCFSR_1_4_5	6.01E-08	6.27E-07	11.42	CCF of three components: R13-INV-FC-R1311 & R13-INV-FC-R1322 & R13-INV-FC-R1331

Table 14.6-4

High Wind At-Power Importance Measure Report

Core Damage Frequency = 8.51E-09

Event Name	Probability	Fus Ves	RAW	Description
R13-INV-FC-CCFSR_1_4_6	6.01E-08	6.27E-07	11.42	CCF of three components: R13-INV-FC-R1311 & R13-INV-FC-R1322 & R13-INV-FC-R1332
R13-INV-FC-CCFSR_2_3_5	6.01E-08	6.27E-07	11.42	CCF of three components: R13-INV-FC-R1312 & R13-INV-FC-R1321 & R13-INV-FC-R1331
R13-INV-FC-CCFSR_2_3_6	6.01E-08	6.27E-07	11.42	CCF of three components: R13-INV-FC-R1312 & R13-INV-FC-R1321 & R13-INV-FC-R1332
R13-INV-FC-CCFSR_2_4_5	6.01E-08	6.27E-07	11.42	CCF of three components: R13-INV-FC-R1312 & R13-INV-FC-R1322 & R13-INV-FC-R1331
R13-INV-FC-CCFSR_2_4_6	6.01E-08	6.27E-07	11.42	CCF of three components: R13-INV-FC-R1312 & R13-INV-FC-R1322 & R13-INV-FC-R1332
R13-INV-FC-CCFSR_ALL	1.14E-05	5.72E-03	502.85	CCF of all components in group 'R13-INV-FC-CCFSR'
R13-INV-FC-R13A1	4.80E-04	2.17E-06	1	INVERTER TO R13-A1 FAILS
R13-INV-FC-R13B1	4.80E-04	2.17E-06	1	INVERTER TO R13-B1 FAILS
R13-INV-FC-R13C	4.80E-04	2.17E-06	1	INVERTER TO R13-C FAILS
R13-XFL-LP-CCFNSR2_1_2_3	1.12E-09	1.51E-06	1.33E+03	CCF of three components: R13-XFL-LP-R13CBA & R13-XFL-LP-R13CBB & R13-XFL-LP-R13C
R13-XFL-LP-CCFNSR2_6_7_8	1.12E-09	1.51E-06	1.33E+03	CCF of three components: R13-XFL-LP-R13RBA & R13-XFL-LP-R13RBB & R13-XFL-LP-R13R
R13-XFL-LP-CCFNSR2_ALL	4.55E-07	6.89E-04	1.52E+03	CCF of all components in group 'R13-XFL-LP-CCFNSR2'
R13-XHE-FO-ADG	1.61E-02	3.43E-03	1.21	OPERATOR FAILS TO ALIGN THE ADG BUSES TO UPS BUSES
R16-BDC-TM-R16A1	5.00E-04	2.22E-06	1	DC BUS R16-A1 IN MAINTENANCE
R16-BDC-TM-R16A3	5.00E-04	7.21E-06	1.01	DC BUS R16-A3 IN MAINTENANCE
R16-BDC-TM-R16B1	5.00E-04	2.22E-06	1	DC BUS R16-B1 IN MAINTENANCE

Table 14.6-4

High Wind At-Power Importance Measure Report

Core Damage Frequency = 8.51E-09

Event Name	Probability	Fus Ves	RAW	Description
R16-BDC-TM-R16B3	5.00E-04	1.10E-05	1.02	DC BUS R16-B3 IN MAINTENANCE
R16-BDC-TM-R16C	5.00E-04	2.22E-06	1	DC BUS R16-C IN MAINTENANCE
R16-BT_-LP-CCFNSR_1_3	3.00E-07	3.92E-07	2.31	CCF of two components: R16-BT_-LP-R16BTA1 & R16-BT_-LP-R16BTB1
R16-BT_-LP-CCFNSR_1_3_5	1.51E-08	2.16E-05	1.43E+03	CCF of three components: R16-BT_-LP-R16BTA1 & R16-BT_-LP-R16BTB1 & R16-BT_-LP-R1
R16-BT_-LP-CCFNSR_1_5	3.00E-07	3.92E-07	2.31	CCF of two components: R16-BT_-LP-R16BTA1 & R16-BT_-LP-R16BTC
R16-BT_-LP-CCFNSR_3_5	3.00E-07	3.92E-07	2.31	CCF of two components: R16-BT_-LP-R16BTB1 & R16-BT_-LP-R16BTC
R16-BT_-LP-CCFNSR_ALL	8.14E-07	1.24E-03	1.52E+03	CCF of all components in group 'R16-BT_-LP-CCFNSR'
R16-BT_-LP-CCFSR_ALL	8.14E-07	3.72E-04	457.12	CCF of all components in group 'R16-BT_-LP-CCFSR'
R16-BT_-LP-R16BTA1	4.80E-05	1.31E-07	1	BATTERY R16-BTA1 FAILS TO PROVIDE OUTPUT
R16-BT_-LP-R16BTB1	4.80E-05	1.31E-07	1	BATTERY R16-BTB1 FAILS TO PROVIDE OUTPUT
R16-BT_-LP-R16BTC	4.80E-05	1.31E-07	1	BATTERY R16-BTC FAILS TO PROVIDE OUTPUT
R16-BT_-TM-R16BTA1	5.00E-04	2.22E-06	1	BATTERY R16-BTA1 IN TEST AND MAINTENANCE
R16-BT_-TM-R16BTA3	5.00E-04	7.21E-06	1.01	BATTERY R16-BTA3 IN TEST AND MAINTENANCE
R16-BT_-TM-R16BTB1	5.00E-04	2.22E-06	1	BATTERY R16-BTB1 IN TEST AND MAINTENANCE
R16-BT_-TM-R16BTB3	5.00E-04	1.10E-05	1.02	BATTERY R16-BTB3 IN TEST AND MAINTENANCE
R16-BT_-TM-R16BTC	5.00E-04	2.22E-06	1	BATTERY R16-BTC IN TEST AND MAINTENANCE
R21-AHU-FR-3A	2.40E-04	1.85E-06	1.01	AIR HANDLING UNIT FAILS TO RUN
R21-AHU-FR-3B	2.40E-04	2.64E-06	1.01	AIR HANDLING UNIT FAILS TO RUN

Table 14.6-4

High Wind At-Power Importance Measure Report

Core Damage Frequency = 8.51E-09

Event Name	Probability	Fus Ves	RAW	Description
R21-AHU-FR-AHU3_1_2	1.26E-05	8.62E-07	1.07	CCF of two components: R21-AHU-FR-3A & R21-AHU-FR-3B
R21-AHU-FS-3A	6.00E-03	2.88E-04	1.05	AIR HANDLING UNIT FAILS TO START
R21-AHU-FS-3B	6.00E-03	3.46E-04	1.06	AIR HANDLING UNIT FAILS TO START
R21-AHU-FS-AHU3_1_2	6.67E-04	2.16E-04	1.32	CCF of two components: R21-AHU-FS-3A & R21-AHU-FS-3B
R21-DG_-FR-ADG_1_2	2.95E-03	8.83E-04	1.29	CCF of two components: R21-DG_-FR-ADGA & R21-DG_-FR-ADGB
R21-DG_-FR-ADGA	5.60E-02	2.34E-03	1.04	ADG-A FAILS TO RUN
R21-DG_-FR-ADGB	5.60E-02	2.33E-03	1.04	DIESEL GENERATOR FAILS TO RUN
R21-DG_-FR-CCF_1_2	4.41E-03	1.68E-03	1.38	CCF of two components: R21-DG_-FR-DGA & R21-DG_-FR-DGB
R21-DG_-FR-DGA	5.60E-02	4.19E-03	1.07	DIESEL GENERATOR "A" FAILS TO RUN GIVEN START
R21-DG_-FR-DGB	5.60E-02	4.76E-03	1.08	DIESEL GENERATOR "B" FAILS TO RUN GIVEN START
R21-DG_-FS-ADG_1_2	1.56E-03	3.99E-04	1.25	CCF of two components: R21-DG_-FS-ADGA & R21-DG_-FS-ADGB
R21-DG_-FS-ADGA	1.40E-02	3.75E-04	1.03	DIESEL GENERATOR FAILS TO START AND LOAD
R21-DG_-FS-ADGB	1.40E-02	3.74E-04	1.03	DIESEL GENERATOR FAILS TO START AND LOAD
R21-DG_-FS-CCF_1_2	2.86E-04	7.83E-05	1.27	CCF of two components: R21-DG_-FS-DGA & R21-DG_-FS-DGB
R21-DG_-FS-DGA	1.40E-02	8.35E-04	1.06	DG-A FAILS TO START AND LOAD
R21-DG_-FS-DGB	1.40E-02	9.73E-04	1.07	DG-B FAILS TO START AND LOAD
R21-DG_-TM-ADGA	4.60E-02	1.23E-03	1.03	ANCILLARY DG-A IN MAINTENANCE
R21-DG_-TM-ADGB	4.60E-02	1.22E-03	1.02	ANCILLARY DG-B IN MAINTENANCE
R21-DG_-TM-DGA	4.60E-02	2.60E-03	1.05	STANDBY DIESEL GENERATOR "A" IN MAINTENANCE
R21-DG_-TM-DGB	4.60E-02	3.07E-03	1.06	STANDBY DIESEL GENERATOR "B" IN MAINTENANCE
R21-FAN-FR-AHU2_1_2	1.26E-05	8.62E-07	1.07	CCF of two components: R21-FAN-FR-AHU2A & R21-FAN-FR-AHU2B
R21-FAN-FR-AHU2A	2.40E-04	1.85E-06	1.01	DG-A NORMAL VENTILATION FAN FAILS TO RUN

Table 14.6-4

High Wind At-Power Importance Measure Report

Core Damage Frequency = 8.51E-09

Event Name	Probability	Fus Ves	RAW	Description
R21-FAN-FR-AHU2B	2.40E-04	2.64E-06	1.01	DG-B NORMAL VENTILATION FAN FAILS TO RUN
R21-FAN-FR-ROOF_ALL	5.68E-06	3.92E-07	1.07	CCF of all components in group 'R21-FAN-FR-ROOF'
R21-FAN-FS-ADG_1_2	6.67E-05	3.89E-06	1.06	CCF of two components: R21-FAN-FS-ADGA & R21-FAN-FS-ADGB
R21-FAN-FS-ADGA	6.00E-04	1.88E-06	1	BLOWER/VENTILATION FAN FAILS TO START
R21-FAN-FS-ADGB	6.00E-04	1.88E-06	1	BLOWER/VENTILATION FAN FAILS TO START
R21-FAN-FS-AHU2_1_2	6.67E-05	1.31E-05	1.19	CCF of two components: R21-FAN-FS-AHU2A & R21-FAN-FS-AHU2B
R21-FAN-FS-AHU2A	6.00E-04	1.02E-05	1.02	DG-A NORMAL VENTILATION FAN FAILS TO RESTART
R21-FAN-FS-AHU2B	6.00E-04	1.49E-05	1.02	DG-B NORMAL VENTILATION FAN FAILS TO RESTART
R21-FAN-FS-ROOF_ALL	3.00E-05	4.41E-06	1.14	CCF of all components in group 'R21-FAN-FS-ROOF'
R21-FLT-PG-ADGA	1.08E-02	2.62E-04	1.02	FILTER PLUGGED
R21-FLT-PG-ADGB	1.08E-02	2.62E-04	1.02	FILTER PLUGGED
R21-FLT-PG-DGA	1.08E-02	6.09E-04	1.05	FILTER PLUGGED
R21-FLT-PG-DGB	1.08E-02	7.15E-04	1.06	FILTER PLUGGED
R21-MCB-CC-1LOAD1	5.00E-04	7.21E-06	1.01	CIRCUIT BREAKER TO LOAD 1 FAILS TO OPEN
R21-MCB-CC-1LOAD2	5.00E-04	7.21E-06	1.01	CIRCUIT BREAKER TO LOAD 2 FAILS TO OPEN
R21-MCB-CC-1LOAD3	5.00E-04	7.21E-06	1.01	CIRCUIT BREAKER TO LOAD 3 FAILS TO OPEN
R21-MCB-CC-1LOAD4	5.00E-04	7.21E-06	1.01	CIRCUIT BREAKER TO LOAD 4 FAILS TO OPEN
R21-MCB-CC-1LOAD5	5.00E-04	7.21E-06	1.01	CIRCUIT BREAKER TO LOAD 5 FAILS TO OPEN
R21-MCB-CC-2LOAD1	5.00E-04	1.10E-05	1.02	CIRCUIT BREAKER TO LOAD 1 FAILS TO OPEN
R21-MCB-CC-2LOAD2	5.00E-04	1.10E-05	1.02	CIRCUIT BREAKER TO LOAD 2 FAILS TO OPEN
R21-MCB-CC-2LOAD3	5.00E-04	1.10E-05	1.02	CIRCUIT BREAKER TO LOAD 3 FAILS TO OPEN

Table 14.6-4

High Wind At-Power Importance Measure Report

Core Damage Frequency = 8.51E-09

Event Name	Probability	Fus Ves	RAW	Description
R21-MCB-CC-2LOAD4	5.00E-04	1.10E-05	1.02	CIRCUIT BREAKER TO LOAD 4 FAILS TO OPEN
R21-MCB-CC-2LOAD5	5.00E-04	1.10E-05	1.02	CIRCUIT BREAKER TO LOAD 5 FAILS TO OPEN
R21-MCB-CC-CCFLS_1_2	5.56E-05	1.04E-05	1.18	CCF of two components: R21-MCB-CC-1LOAD1 & R21-MCB-CC-2LOAD1
R21-MOD-CC-1A	3.00E-03	1.17E-04	1.04	MOTOR-OPERATED DAMPER FAILS TO OPEN
R21-MOD-CC-1B	3.00E-03	1.43E-04	1.05	MOTOR-OPERATED DAMPER FAILS TO OPEN
R21-MOD-CC-2A	3.00E-03	1.17E-04	1.04	MOTOR-OPERATED DAMPER FAILS TO OPEN
R21-MOD-CC-2B	3.00E-03	1.43E-04	1.05	MOTOR-OPERATED DAMPER FAILS TO OPEN
R21-MOD-CC-3A	3.00E-03	1.17E-04	1.04	MOTOR-OPERATED DAMPER FAILS TO OPEN
R21-MOD-CC-3B	3.00E-03	1.43E-04	1.05	MOTOR-OPERATED DAMPER FAILS TO OPEN
R21-MOD-CC-EXH_ALL	1.50E-04	3.74E-05	1.25	CCF of all components in group 'R21-MOD-CC-EXH'
R21-MOD-CC-INL_1_2	3.33E-05	5.64E-06	1.16	CCF of two components: R21-MOD-CC-1A & R21-MOD-CC-1B
R21-MOD-CC-INL_1_4	3.33E-05	5.64E-06	1.16	CCF of two components: R21-MOD-CC-1A & R21-MOD-CC-2B
R21-MOD-CC-INL_1_6	3.33E-05	5.64E-06	1.16	CCF of two components: R21-MOD-CC-1A & R21-MOD-CC-3B
R21-MOD-CC-INL_2_3	3.33E-05	5.64E-06	1.16	CCF of two components: R21-MOD-CC-1B & R21-MOD-CC-2A
R21-MOD-CC-INL_2_5	3.33E-05	5.64E-06	1.16	CCF of two components: R21-MOD-CC-1B & R21-MOD-CC-3A
R21-MOD-CC-INL_3_4	3.33E-05	5.64E-06	1.16	CCF of two components: R21-MOD-CC-2A & R21-MOD-CC-2B
R21-MOD-CC-INL_3_6	3.33E-05	5.64E-06	1.16	CCF of two components: R21-MOD-CC-2A & R21-MOD-CC-3B
R21-MOD-CC-INL_4_5	3.33E-05	5.64E-06	1.16	CCF of two components: R21-MOD-CC-2B & R21-MOD-CC-3A
R21-MOD-CC-INL_5_6	3.33E-05	5.64E-06	1.16	CCF of two components: R21-MOD-CC-3A & R21-MOD-CC-3B
R21-MOD-CC-INL_ALL	1.50E-04	3.74E-05	1.25	CCF of all components in group 'R21-MOD-CC-INL'
R21-MP_-FR-ADG_1_2	3.16E-05	7.31E-07	1.02	CCF of two components: R21-MP_-FR-FOADGA & R21-MP_-FR-FOADGB

Table 14.6-4

High Wind At-Power Importance Measure Report

Core Damage Frequency = 8.51E-09

Event Name	Probability	Fus Ves	RAW	Description
R21-MP_-FR-FOADGA	6.00E-04	1.88E-06	1	MOTOR-DRIVEN PUMP (ALL TYPES) FAILS TO RUN
R21-MP_-FR-FOADGB	6.00E-04	1.88E-06	1	MOTOR-DRIVEN PUMP (ALL TYPES) FAILS TO RUN
R21-MP_-FR-FOPUMP_ALL	1.42E-05	1.15E-06	1.08	CCF of all components in group 'R21-MP_-FR-FOPUMP'
R21-MP_-FS-ADG_1_2	2.22E-04	3.06E-05	1.13	CCF of two components: R21-MP_-FS-FOADGA & R21-MP_-FS-FOADGB
R21-MP_-FS-FOADGA	2.00E-03	1.75E-05	1.01	MOTOR-DRIVEN PUMP (ALL TYPES) FAILS TO START
R21-MP_-FS-FOADGB	2.00E-03	1.75E-05	1.01	MOTOR-DRIVEN PUMP (ALL TYPES) FAILS TO START
R21-MP_-FS-FOPUMP_ALL	1.00E-04	2.13E-05	1.21	CCF of all components in group 'R21-MP_-FS-FOPUMP'
R21-NSC-TM-ANCA	1.50E-03	2.82E-05	1.02	ADG BUS A IN TEST OR MAINTENANCE
R21-NSC-TM-ANCB	1.50E-03	6.79E-06	1	ADG BUS B IN TEST OR MAINTENANCE
R21-RE_-FO-ADG_1_2	9.73E-05	6.00E-06	1.06	CCF of two components: R21-RE_-FO-ADGA & R21-RE_-FO-ADGB
R21-RE_-FO-ADGA	8.75E-04	4.54E-06	1.01	ADG-A UNDERVOLTAGE RELAY FAILS TO OPERATE ON DEMAND
R21-RE_-FO-ADGB	8.75E-04	4.54E-06	1.01	ADG-B UNDERVOLTAGE RELAY FAILS TO OPERATE ON DEMAND
R21-TRN-RE-FOADGA	2.42E-02	8.06E-04	1.03	FAILURE TO RESTORE FUEL OIL TRANSFER TRAIN FOR ADG-A
R21-TRN-RE-FOADGB	2.42E-02	8.03E-04	1.03	FAILURE TO RESTORE FUEL OIL TRANSFER TRAIN FOR ADG-A
R21-TRN-RE-FODG1A	2.42E-02	9.84E-06	1	FAILURE TO RESTORE FUEL OIL TRANSFER TRAIN 1 FOR DG-A
R21-TRN-RE-FODG1B	2.42E-02	1.44E-05	1	FAILURE TO RESTORE FUEL OIL TRANSFER TRAIN 1 FOR DG-B
R21-TRN-RE-FODG2A	2.42E-02	9.84E-06	1	FAILURE TO RESTORE FUEL OIL TRANSFER TRAIN 2 FOR DG-A
R21-TRN-RE-FODG2B	2.42E-02	1.44E-05	1	FAILURE TO RESTORE FUEL OIL TRANSFER TRAIN 2 FOR DG-B
R21-XHE-FO-ADG	1.61E-02	6.34E-03	1.38	OPERATOR FAILS TO CONTROL THE LOADS ON ANCILLARY DG BUSES
R21-XHE-FO-ADGCROSS	1.61E-02	2.03E-05	1	OPERATOR FAILS TO CROSS-TIE THE ANCILLARY DG BUSES

Table 14.6-4

High Wind At-Power Importance Measure Report

Core Damage Frequency = 8.51E-09

Event Name	Probability	Fus Ves	RAW	Description
T10-ACV-CC-F013	2.00E-03	1.25E-06	1	AOV F013 FAILS TO OPEN
T10-ACV-CC-F016	2.00E-03	1.25E-06	1	AOV F016 FAILS TO OPEN
T10-ACV-OO-ISV1	2.00E-03	7.31E-07	1	AIR OPERATED VALVE FAILS TO CLOSE
T10-ACV-OO-ISV2	2.00E-03	7.31E-07	1	AIR OPERATED VALVE FAILS TO CLOSE
T10-ACV-OO-ISV3	2.00E-03	7.31E-07	1	AIR OPERATED VALVE FAILS TO CLOSE
T10-ACV-OO-RWCU-CIV_ALL	1.21E-04	1.10E-06	1.01	CCF of all components in group 'T10-ACV-OO-RWCU-CIV'
T10-ACV-OO-RWCU-NO-CIV_ALL	1.21E-04	1.10E-06	1.01	CCF of all components in group 'T10-ACV-OO-RWCU-NO-CIV'
T10-LOG-SP-VBIV1	1.00E-03	2.45E-06	1	LOGIC PROCESSOR INADVERTANTLY ACTUATES
T10-LOG-SP-VBIV2	1.00E-03	2.45E-06	1	LOGIC PROCESSOR INADVERTANTLY ACTUATES
T10-LOG-SP-VBIV3	1.00E-03	2.45E-06	1	LOGIC PROCESSOR INADVERTANTLY ACTUATES
T10-UV_-OO-VBISV1	1.00E-03	2.35E-07	1	CHECK VALVE FAILS TO CLOSE
T10-UV_-OO-VBISV2	1.00E-03	2.35E-07	1	CHECK VALVE FAILS TO CLOSE
T10-UV_-OO-VBISV3	1.00E-03	2.35E-07	1	CHECK VALVE FAILS TO CLOSE
T10-VB_-CC_1_2	2.78E-07	5.22E-07	2.79	CCF of two components: T10-VB_-CC-VB1 & T10-VB_-CC-VB2
T10-VB_-CC_1_2_3	5.56E-07	2.45E-03	4.40E+03	CCF of three components: T10-VB_-CC-VB1 & T10-VB_-CC-VB2 & T10-VB_-CC-VB3
T10-VB_-CC_1_3	2.78E-07	5.22E-07	2.79	CCF of two components: T10-VB_-CC-VB1 & T10-VB_-CC-VB3
T10-VB_-CC_2_3	2.78E-07	5.22E-07	2.79	CCF of two components: T10-VB_-CC-VB2 & T10-VB_-CC-VB3
T10-VB_-LK-VB1	1.00E-04	1.78E-05	1.18	PROBABILITY OF LEAK IN VACUUM BREAKER 1
T10-VB_-LK-VB2	1.00E-04	1.78E-05	1.18	PROBABILITY OF LEAK IN VACUUM BREAKER 2
T10-VB_-LK-VB3	1.00E-04	1.78E-05	1.18	PROBABILITY OF LEAK IN VACUUM BREAKER 3

Table 14.6-4

High Wind At-Power Importance Measure Report

Core Damage Frequency = 8.51E-09

Event Name	Probability	Fus Ves	RAW	Description
T10-XHE-FO-CONTVENT	1.77E-02	4.60E-05	1	OPERATOR FAILS TO ACTUATE CONTAINMENT VENTING
T15-FLT-PP_ALL	5.68E-07	5.04E-06	9.68	CCF of all components in group 'T15-FLT-PP'
T15-HX_-PP_ALL	5.68E-08	1.31E-07	3.3	CCF of all components in group 'T15-HX_-PP'
U43-BV_CC_1_2	8.77E-07	6.04E-05	69.72	CCF of two components: U43-BV_-CC-F426A & U43-BV_-CC-F426B
U43-BV_CC_1_2_3	8.77E-08	5.69E-06	65.88	CCF of three components: U43-BV_-CC-F426A & U43-BV_-CC-F426B & U43-BV_-CC-FU435A
U43-BV_CC_1_2_4	8.77E-08	5.69E-06	65.88	CCF of three components: U43-BV_-CC-F426A & U43-BV_-CC-F426B & U43-BV_-CC-FU435B
U43-BV_CC_1_3_4	8.77E-08	5.69E-06	65.88	CCF of three components: U43-BV_-CC-F426A & U43-BV_-CC-FU435A & U43-BV_-CC-FU435
U43-BV_CC_1_4	8.77E-07	6.04E-05	69.72	CCF of two components: U43-BV_-CC-F426A & U43-BV_-CC-FU435B
U43-BV_CC_2_3	8.77E-07	6.04E-05	69.72	CCF of two components: U43-BV_-CC-F426B & U43-BV_-CC-FU435A
U43-BV_CC_2_3_4	8.77E-08	5.69E-06	65.88	CCF of three components: U43-BV_-CC-F426B & U43-BV_-CC-FU435A & U43-BV_-CC-FU435
U43-BV_CC_3_4	8.77E-07	6.04E-05	69.72	CCF of two components: U43-BV_-CC-FU435A & U43-BV_-CC-FU435B
U43-BV_CC_ALL	2.37E-06	1.64E-04	70.31	CCF of all components in group 'U43-BV_CC'
U43-BV_-CC-F426A	1.00E-04	2.30E-06	1.02	MANUAL VALVE FAILS TO OPEN
U43-BV_-CC-F426B	1.00E-04	2.30E-06	1.02	MANUAL VALVE FAILS TO OPEN
U43-BV_-CC-FU435A	1.00E-04	2.30E-06	1.02	MANUAL VALVE FAILS TO OPEN
U43-BV_-CC-FU435B	1.00E-04	2.30E-06	1.02	MANUAL VALVE FAILS TO OPEN
U43-EDP-FR_1_2	5.58E-04	2.75E-04	1.49	CCF of two components: U43-EDP-FR-P1A & U43-EDP-FR-P2A
U43-EDP-FR-P1A	2.37E-02	7.06E-04	1.03	DIESEL-DRIVEN PUMP FAILS TO RUN
U43-EDP-FR-P2A	2.37E-02	5.17E-04	1.02	DIESEL-DRIVEN PUMP FAILS TO RUN

Table 14.6-4

High Wind At-Power Importance Measure Report

Core Damage Frequency = 8.51E-09

Event Name	Probability	Fus Ves	RAW	Description
U43-EDP-FS_1_2	2.22E-03	1.25E-03	1.56	CCF of two components: U43-EDP-FS-P1A & U43-EDP-FS-P2A
U43-EDP-FS-P1A	2.00E-02	5.86E-04	1.03	DIESEL-DRIVEN PUMP FAILS TO START
U43-EDP-FS-P2A	2.00E-02	4.31E-04	1.02	DIESEL-DRIVEN PUMP 2A FAILS TO START
U43-MP_-FR-P1B	6.00E-04	4.75E-06	1.01	FPS PUMP 1B FAILS TO RUN GIVEN START
U43-MP_FS_1_2	2.22E-04	7.31E-07	1	CCF of two components: U43-MP_-FS-P1B & U43-MP_-FS-P2B
U43-MP_-FS-P1B	2.00E-03	1.69E-05	1.01	FPS PUMP 1B FAILS TO START
U43-NSC-TM-P1A	1.50E-03	2.58E-05	1.02	FPS PUMP P1A IN MAINTENANCE
U43-NSC-TM-P1B	1.50E-03	1.26E-05	1.01	FPS PUMP P1B IN MAINTENANCE
U43-NSC-TM-P2A	1.50E-03	1.93E-05	1.01	FPS PUMP P2A IN MAINTENANCE
U43-UV_-CC_1_2_5	1.83E-07	2.61E-07	2.42	CCF of three components: U43-UV_-CC-FU431A & U43-UV_-CC-FU431B & U43-UV_-CC-FU43
U43-UV_-CC_1_2_7	1.83E-07	2.61E-07	2.42	CCF of three components: U43-UV_-CC-FU431A & U43-UV_-CC-FU431B & U43-UV_-CC-FU43
U43-UV_-CC_1_4_5	1.83E-07	2.61E-07	2.42	CCF of three components: U43-UV_-CC-FU431A & U43-UV_-CC-FU432B & U43-UV_-CC-FU43
U43-UV_-CC_1_4_7	1.83E-07	2.61E-07	2.42	CCF of three components: U43-UV_-CC-FU431A & U43-UV_-CC-FU432B & U43-UV_-CC-FU43
U43-UV_-CC_2_3_5	1.83E-07	2.61E-07	2.42	CCF of three components: U43-UV_-CC-FU431B & U43-UV_-CC-FU432A & U43-UV_-CC-FU43
U43-UV_-CC_2_3_7	1.83E-07	2.61E-07	2.42	CCF of three components: U43-UV_-CC-FU431B & U43-UV_-CC-FU432A & U43-UV_-CC-FU43
U43-UV_-CC_3_4_5	1.83E-07	2.61E-07	2.42	CCF of three components: U43-UV_-CC-FU432A & U43-UV_-CC-FU432B & U43-UV_-CC-FU43
U43-UV_-CC_3_4_7	1.83E-07	2.61E-07	2.42	CCF of three components: U43-UV_-CC-FU432A & U43-UV_-CC-FU432B & U43-UV_-CC-FU43

Table 14.6-4

High Wind At-Power Importance Measure Report

Core Damage Frequency = 8.51E-09

Event Name	Probability	Fus Ves	RAW	Description
U43-UV_-CC_ALL	1.69E-05	3.08E-05	2.82	CCF of all components in group 'U43-UV_-CC'
U43-UV_-CC2_1_2	2.73E-07	1.85E-05	68.59	CCF of two components: G21-UV_-CC-F427A & G21-UV_-CC-F427B
U43-UV_-CC2_1_2_3	9.18E-07	6.31E-05	69.71	CCF of three components: G21-UV_-CC-F427A & G21-UV_-CC-F427B & U43-UV_-CC-FU434A
U43-UV_-CC2_1_2_4	9.18E-07	6.31E-05	69.71	CCF of three components: G21-UV_-CC-F427A & G21-UV_-CC-F427B & U43-UV_-CC-FU434B
U43-UV_-CC2_1_3_4	9.18E-07	6.31E-05	69.71	CCF of three components: G21-UV_-CC-F427A & U43-UV_-CC-FU434A & U43-UV_-CC-FU434
U43-UV_-CC2_1_4	2.73E-07	1.85E-05	68.59	CCF of two components: G21-UV_-CC-F427A & U43-UV_-CC-FU434B
U43-UV_-CC2_2_3	2.73E-07	1.85E-05	68.59	CCF of two components: G21-UV_-CC-F427B & U43-UV_-CC-FU434A
U43-UV_-CC2_2_3_4	9.18E-07	6.31E-05	69.71	CCF of three components: G21-UV_-CC-F427B & U43-UV_-CC-FU434A & U43-UV_-CC-FU434
U43-UV_-CC2_3_4	2.73E-07	1.85E-05	68.59	CCF of two components: U43-UV_-CC-FU434A & U43-UV_-CC-FU434B
U43-UV_-CC2_ALL	1.69E-05	1.19E-03	71.58	CCF of all components in group 'U43-UV_-CC2'
U43-UV_-CC-FU431B	1.00E-04	3.13E-07	1	PUMP DISCHARGE CHECK VALVE FAILS TO OPEN
U43-UV_-CC-FU432B	1.00E-04	3.13E-07	1	P1B FIRE HEADER CHECK VALVE FAILS TO OPEN
U43-UV_-CC-FU434A	1.00E-04	2.30E-06	1.02	CHECK VALVE FAILS TO OPEN
U43-UV_-CC-FU434B	1.00E-04	2.30E-06	1.02	CHECK VALVE FAILS TO OPEN
U43-XHE-FO-2ND	1.61E-02	3.38E-04	1.02	OPERATOR FAILS TO ALIGN FPS CROSSTIE
U43-XHE-FO-LPCI	1.61E-03	2.38E-05	1.01	OPERATOR FAILS TO ACTUATE U43 IN LPCI MODE
U43-XHE-FO-MAKEUP	1.61E-02	3.20E-02	2.95	OPERATOR FAILS TO ACTUATE U43 IN MAKE UP MODE
U43-XHE-FO-PMPTRK	2.66E-02	3.48E-02	2.27	OPERATOR FAIL TO SUPPLY WATER FROM PUMP TRUCKS
XHOS72H	1.00E+00	1.61E-01	1	HOUSE EVENT: 72 HOURS (VALUE =1)

Table 14.6-4

High Wind At-Power Importance Measure Report

Core Damage Frequency = 8.51E-09

Event Name	Probability	Fus Ves	RAW	Description
XXX-XHE-FO-DEPRESS	1.61E-01	1.21E-01	1.63	OPERATOR FAILS TO RECOGNIZE NEED OF DEPRESSURIZATION
XXX-XHE-FO-ICPCCS	1.61E-03	1.24E-01	77.88	Operator fails to recognize the need to makeup ICS/PCCS Pool level.
XXX-XHE-FO-LPMAKEUP	1.61E-01	1.19E-01	1.62	OP. FAILS TO RECOG. NEED FOR LOW PRESS. MAKEUP AFTER DEPRESSURIZATION
XXX-XHE-FO-RPVLDE	1.61E-02	2.07E-05	1	OP. FAILS TO RECOG. OR CHECK THE RPV DECREASING LEVEL

Table 14.6-5

High Wind Shutdown Importance Measure Report

CDF = 3.95E-08

Event Name	Probability	Fus Ves	RAW	Description
B21-ACV-OC-F111A	2.40E-05	7.12E-04	30.67	AIR-TESTABLE CHECK VALVE F111A FAILS TO REMAIN OPEN
B21-SQV-CC_1_2	2.38E-05	2.67E-04	12.21	CCF of two components: B21-SQV-CC-F004A & B21-SQV-CC-F004B
B21-SQV-CC_1_2_3	7.94E-07	7.25E-04	914.21	CCF of three components: B21-SQV-CC-F004A & B21-SQV-CC-F004B & B21-SQV-CC-F004C
B21-SQV-CC_1_2_4	7.94E-07	7.25E-04	914.21	CCF of three components: B21-SQV-CC-F004A & B21-SQV-CC-F004B & B21-SQV-CC-F004D
B21-SQV-CC_1_2_5	7.94E-07	7.25E-04	914.21	CCF of three components: B21-SQV-CC-F004A & B21-SQV-CC-F004B & B21-SQV-CC-F004E
B21-SQV-CC_1_2_6	7.94E-07	7.25E-04	914.21	CCF of three components: B21-SQV-CC-F004A & B21-SQV-CC-F004B & B21-SQV-CC-F004F
B21-SQV-CC_1_2_7	7.94E-07	8.44E-06	11.6	CCF of three components: B21-SQV-CC-F004A & B21-SQV-CC-F004B & B21-SQV-CC-F004G
B21-SQV-CC_1_2_8	7.94E-07	8.44E-06	11.6	CCF of three components: B21-SQV-CC-F004A & B21-SQV-CC-F004B & B21-SQV-CC-F004H
B21-SQV-CC_1_3	2.38E-05	2.67E-04	12.21	CCF of two components: B21-SQV-CC-F004A & B21-SQV-CC-F004C
B21-SQV-CC_1_3_4	7.94E-07	7.25E-04	914.21	CCF of three components: B21-SQV-CC-F004A & B21-SQV-CC-F004C & B21-SQV-CC-F004D
B21-SQV-CC_1_3_5	7.94E-07	7.25E-04	914.21	CCF of three components: B21-SQV-CC-F004A & B21-SQV-CC-F004C & B21-SQV-CC-F004E
B21-SQV-CC_1_3_6	7.94E-07	7.25E-04	914.21	CCF of three components: B21-SQV-CC-F004A & B21-SQV-CC-F004C & B21-SQV-CC-F004F
B21-SQV-CC_1_3_7	7.94E-07	8.44E-06	11.6	CCF of three components: B21-SQV-CC-F004A & B21-SQV-CC-F004C & B21-SQV-CC-F004G

Table 14.6-5

High Wind Shutdown Importance Measure Report

CDF = 3.95E-08

Event Name	Probability	Fus Ves	RAW	Description
B21-SQV-CC_1_3_8	7.94E-07	8.44E-06	11.6	CCF of three components: B21-SQV-CC-F004A & B21-SQV-CC-F004C & B21-SQV-CC-F004H
B21-SQV-CC_1_4	2.38E-05	2.67E-04	12.21	CCF of two components: B21-SQV-CC-F004A & B21-SQV-CC-F004D
B21-SQV-CC_1_4_5	7.94E-07	7.25E-04	914.21	CCF of three components: B21-SQV-CC-F004A & B21-SQV-CC-F004D & B21-SQV-CC-F004E
B21-SQV-CC_1_4_6	7.94E-07	7.25E-04	914.21	CCF of three components: B21-SQV-CC-F004A & B21-SQV-CC-F004D & B21-SQV-CC-F004F
B21-SQV-CC_1_4_7	7.94E-07	8.44E-06	11.6	CCF of three components: B21-SQV-CC-F004A & B21-SQV-CC-F004D & B21-SQV-CC-F004G
B21-SQV-CC_1_4_8	7.94E-07	8.44E-06	11.6	CCF of three components: B21-SQV-CC-F004A & B21-SQV-CC-F004D & B21-SQV-CC-F004H
B21-SQV-CC_1_5	2.38E-05	2.67E-04	12.21	CCF of two components: B21-SQV-CC-F004A & B21-SQV-CC-F004E
B21-SQV-CC_1_5_6	7.94E-07	7.25E-04	914.21	CCF of three components: B21-SQV-CC-F004A & B21-SQV-CC-F004E & B21-SQV-CC-F004F
B21-SQV-CC_1_5_7	7.94E-07	8.44E-06	11.6	CCF of three components: B21-SQV-CC-F004A & B21-SQV-CC-F004E & B21-SQV-CC-F004G
B21-SQV-CC_1_5_8	7.94E-07	8.44E-06	11.6	CCF of three components: B21-SQV-CC-F004A & B21-SQV-CC-F004E & B21-SQV-CC-F004H
B21-SQV-CC_1_6	2.38E-05	2.67E-04	12.21	CCF of two components: B21-SQV-CC-F004A & B21-SQV-CC-F004F
B21-SQV-CC_1_6_7	7.94E-07	8.44E-06	11.6	CCF of three components: B21-SQV-CC-F004A & B21-SQV-CC-F004F & B21-SQV-CC-F004G

Table 14.6-5

High Wind Shutdown Importance Measure Report

CDF = 3.95E-08

Event Name	Probability	Fus Ves	RAW	Description
B21-SQV-CC_1_6_8	7.94E-07	8.44E-06	11.6	CCF of three components: B21-SQV-CC-F004A & B21-SQV-CC-F004F & B21-SQV-CC-F004H
B21-SQV-CC_1_7	2.38E-05	6.08E-06	1.25	CCF of two components: B21-SQV-CC-F004A & B21-SQV-CC-F004G
B21-SQV-CC_1_8	2.38E-05	6.08E-06	1.25	CCF of two components: B21-SQV-CC-F004A & B21-SQV-CC-F004H
B21-SQV-CC_2_3	2.38E-05	2.67E-04	12.21	CCF of two components: B21-SQV-CC-F004B & B21-SQV-CC-F004C
B21-SQV-CC_2_3_4	7.94E-07	7.25E-04	914.21	CCF of three components: B21-SQV-CC-F004B & B21-SQV-CC-F004C & B21-SQV-CC-F004D
B21-SQV-CC_2_3_5	7.94E-07	7.25E-04	914.21	CCF of three components: B21-SQV-CC-F004B & B21-SQV-CC-F004C & B21-SQV-CC-F004E
B21-SQV-CC_2_3_6	7.94E-07	7.25E-04	914.21	CCF of three components: B21-SQV-CC-F004B & B21-SQV-CC-F004C & B21-SQV-CC-F004F
B21-SQV-CC_2_3_7	7.94E-07	8.44E-06	11.6	CCF of three components: B21-SQV-CC-F004B & B21-SQV-CC-F004C & B21-SQV-CC-F004G
B21-SQV-CC_2_3_8	7.94E-07	8.44E-06	11.6	CCF of three components: B21-SQV-CC-F004B & B21-SQV-CC-F004C & B21-SQV-CC-F004H
B21-SQV-CC_2_4	2.38E-05	2.67E-04	12.21	CCF of two components: B21-SQV-CC-F004B & B21-SQV-CC-F004D
B21-SQV-CC_2_4_5	7.94E-07	7.25E-04	914.21	CCF of three components: B21-SQV-CC-F004B & B21-SQV-CC-F004D & B21-SQV-CC-F004E
B21-SQV-CC_2_4_6	7.94E-07	7.25E-04	914.21	CCF of three components: B21-SQV-CC-F004B & B21-SQV-CC-F004D & B21-SQV-CC-F004F

Table 14.6-5

High Wind Shutdown Importance Measure Report

CDF = 3.95E-08

Event Name	Probability	Fus Ves	RAW	Description
B21-SQV-CC_2_4_7	7.94E-07	8.44E-06	11.6	CCF of three components: B21-SQV-CC-F004B & B21-SQV-CC-F004D & B21-SQV-CC-F004G
B21-SQV-CC_2_4_8	7.94E-07	8.44E-06	11.6	CCF of three components: B21-SQV-CC-F004B & B21-SQV-CC-F004D & B21-SQV-CC-F004H
B21-SQV-CC_2_5	2.38E-05	2.67E-04	12.21	CCF of two components: B21-SQV-CC-F004B & B21-SQV-CC-F004E
B21-SQV-CC_2_5_6	7.94E-07	7.25E-04	914.21	CCF of three components: B21-SQV-CC-F004B & B21-SQV-CC-F004E & B21-SQV-CC-F004F
B21-SQV-CC_2_5_7	7.94E-07	8.44E-06	11.6	CCF of three components: B21-SQV-CC-F004B & B21-SQV-CC-F004E & B21-SQV-CC-F004G
B21-SQV-CC_2_5_8	7.94E-07	8.44E-06	11.6	CCF of three components: B21-SQV-CC-F004B & B21-SQV-CC-F004E & B21-SQV-CC-F004H
B21-SQV-CC_2_6	2.38E-05	2.67E-04	12.21	CCF of two components: B21-SQV-CC-F004B & B21-SQV-CC-F004F
B21-SQV-CC_2_6_7	7.94E-07	8.44E-06	11.6	CCF of three components: B21-SQV-CC-F004B & B21-SQV-CC-F004F & B21-SQV-CC-F004G
B21-SQV-CC_2_6_8	7.94E-07	8.44E-06	11.6	CCF of three components: B21-SQV-CC-F004B & B21-SQV-CC-F004F & B21-SQV-CC-F004H
B21-SQV-CC_2_7	2.38E-05	6.08E-06	1.25	CCF of two components: B21-SQV-CC-F004B & B21-SQV-CC-F004G
B21-SQV-CC_2_8	2.38E-05	6.08E-06	1.25	CCF of two components: B21-SQV-CC-F004B & B21-SQV-CC-F004H
B21-SQV-CC_3_4	2.38E-05	2.67E-04	12.21	CCF of two components: B21-SQV-CC-F004C & B21-SQV-CC-F004D

Table 14.6-5

High Wind Shutdown Importance Measure Report

CDF = 3.95E-08

Event Name	Probability	Fus Ves	RAW	Description
B21-SQV-CC_3_4_5	7.94E-07	7.25E-04	914.21	CCF of three components: B21-SQV-CC-F004C & B21-SQV-CC-F004D & B21-SQV-CC-F004E
B21-SQV-CC_3_4_6	7.94E-07	7.25E-04	914.21	CCF of three components: B21-SQV-CC-F004C & B21-SQV-CC-F004D & B21-SQV-CC-F004F
B21-SQV-CC_3_4_7	7.94E-07	8.44E-06	11.6	CCF of three components: B21-SQV-CC-F004C & B21-SQV-CC-F004D & B21-SQV-CC-F004G
B21-SQV-CC_3_4_8	7.94E-07	8.44E-06	11.6	CCF of three components: B21-SQV-CC-F004C & B21-SQV-CC-F004D & B21-SQV-CC-F004H
B21-SQV-CC_3_5	2.38E-05	2.67E-04	12.21	CCF of two components: B21-SQV-CC-F004C & B21-SQV-CC-F004E
B21-SQV-CC_3_5_6	7.94E-07	7.25E-04	914.21	CCF of three components: B21-SQV-CC-F004C & B21-SQV-CC-F004E & B21-SQV-CC-F004F
B21-SQV-CC_3_5_7	7.94E-07	8.44E-06	11.6	CCF of three components: B21-SQV-CC-F004C & B21-SQV-CC-F004E & B21-SQV-CC-F004G
B21-SQV-CC_3_5_8	7.94E-07	8.44E-06	11.6	CCF of three components: B21-SQV-CC-F004C & B21-SQV-CC-F004E & B21-SQV-CC-F004H
B21-SQV-CC_3_6	2.38E-05	2.67E-04	12.21	CCF of two components: B21-SQV-CC-F004C & B21-SQV-CC-F004F
B21-SQV-CC_3_6_7	7.94E-07	8.44E-06	11.6	CCF of three components: B21-SQV-CC-F004C & B21-SQV-CC-F004F & B21-SQV-CC-F004G
B21-SQV-CC_3_6_8	7.94E-07	8.44E-06	11.6	CCF of three components: B21-SQV-CC-F004C & B21-SQV-CC-F004F & B21-SQV-CC-F004H
B21-SQV-CC_3_7	2.38E-05	6.08E-06	1.25	CCF of two components: B21-SQV-CC-F004C & B21-SQV-CC-F004G

Table 14.6-5

High Wind Shutdown Importance Measure Report

CDF = 3.95E-08

Event Name	Probability	Fus Ves	RAW	Description
B21-SQV-CC_3_8	2.38E-05	6.08E-06	1.25	CCF of two components: B21-SQV-CC-F004C & B21-SQV-CC-F004H
B21-SQV-CC_4_5	2.38E-05	2.67E-04	12.21	CCF of two components: B21-SQV-CC-F004D & B21-SQV-CC-F004E
B21-SQV-CC_4_5_6	7.94E-07	7.25E-04	914.21	CCF of three components: B21-SQV-CC-F004D & B21-SQV-CC-F004E & B21-SQV-CC-F004F
B21-SQV-CC_4_5_7	7.94E-07	8.44E-06	11.6	CCF of three components: B21-SQV-CC-F004D & B21-SQV-CC-F004E & B21-SQV-CC-F004G
B21-SQV-CC_4_5_8	7.94E-07	8.44E-06	11.6	CCF of three components: B21-SQV-CC-F004D & B21-SQV-CC-F004E & B21-SQV-CC-F004H
B21-SQV-CC_4_6	2.38E-05	2.67E-04	12.21	CCF of two components: B21-SQV-CC-F004D & B21-SQV-CC-F004F
B21-SQV-CC_4_6_7	7.94E-07	8.44E-06	11.6	CCF of three components: B21-SQV-CC-F004D & B21-SQV-CC-F004F & B21-SQV-CC-F004G
B21-SQV-CC_4_6_8	7.94E-07	8.44E-06	11.6	CCF of three components: B21-SQV-CC-F004D & B21-SQV-CC-F004F & B21-SQV-CC-F004H
B21-SQV-CC_4_7	2.38E-05	6.08E-06	1.25	CCF of two components: B21-SQV-CC-F004D & B21-SQV-CC-F004G
B21-SQV-CC_4_8	2.38E-05	6.08E-06	1.25	CCF of two components: B21-SQV-CC-F004D & B21-SQV-CC-F004H
B21-SQV-CC_5_6	2.38E-05	2.67E-04	12.21	CCF of two components: B21-SQV-CC-F004E & B21-SQV-CC-F004F
B21-SQV-CC_5_6_7	7.94E-07	8.44E-06	11.6	CCF of three components: B21-SQV-CC-F004E & B21-SQV-CC-F004F & B21-SQV-CC-F004G

Table 14.6-5

High Wind Shutdown Importance Measure Report

CDF = 3.95E-08

Event Name	Probability	Fus Ves	RAW	Description
B21-SQV-CC_5_6_8	7.94E-07	8.44E-06	11.6	CCF of three components: B21-SQV-CC-F004E & B21-SQV-CC-F004F & B21-SQV-CC-F004H
B21-SQV-CC_5_7	2.38E-05	6.08E-06	1.25	CCF of two components: B21-SQV-CC-F004E & B21-SQV-CC-F004G
B21-SQV-CC_5_8	2.38E-05	6.08E-06	1.25	CCF of two components: B21-SQV-CC-F004E & B21-SQV-CC-F004H
B21-SQV-CC_6_7	2.38E-05	6.08E-06	1.25	CCF of two components: B21-SQV-CC-F004F & B21-SQV-CC-F004G
B21-SQV-CC_6_8	2.38E-05	6.08E-06	1.25	CCF of two components: B21-SQV-CC-F004F & B21-SQV-CC-F004H
B21-SQV-CC_ALL	1.50E-04	1.43E-01	952.86	CCF of all components in group 'B21-SQV-CC'
B21-SQV-CC-F004A	3.00E-03	9.34E-04	1.31	EXPLOSIVE VALVE DPV F004A FAILS TO OPERATE
B21-SQV-CC-F004B	3.00E-03	9.34E-04	1.31	EXPLOSIVE VALVE DPV B FAILS TO OPERATE
B21-SQV-CC-F004C	3.00E-03	9.34E-04	1.31	EXPLOSIVE VALVE DPV C FAILS TO OPERATE
B21-SQV-CC-F004D	3.00E-03	9.34E-04	1.31	EXPLOSIVE VALVE DPV D FAILS TO OPERATE
B21-SQV-CC-F004E	3.00E-03	9.34E-04	1.31	EXPLOSIVE VALVE DPV E FAILS TO OPERATE
B21-SQV-CC-F004F	3.00E-03	9.34E-04	1.31	EXPLOSIVE VALVE DPV F FAILS TO OPERATE

Table 14.6-5

High Wind Shutdown Importance Measure Report

CDF = 3.95E-08

Event Name	Probability	Fus Ves	RAW	Description
B21-UV_-CC-F102_1_2	2.99E-06	8.75E-05	30.24	CCF of two components: B21-UV_-CC-F102A & B21-UV_-CC-F102B
B21-UV_-CC-F102A	1.00E-04	2.99E-03	30.88	CHECK VALVE F102A FAILS TO OPEN
B21-UV_-CC-F111_1_2	2.99E-06	8.75E-05	30.24	CCF of two components: B21-UV_-CC-F111A & B21-UV_-CC-F111B
B21-UV_-CC-F111A	1.00E-04	2.99E-03	30.88	CHECK VALVE F111A FAILS TO OPEN
B21-UV_-OC-F102A	4.80E-06	1.42E-04	30.49	CHECK VALVE F102A FAILS TO REMAIN OPEN
B32-HOV-FO-F005A	2.00E-03	3.38E-08	1	ELECTRO-HYDRAULIC VALVE FAILS TO OPERATE
B32-HOV-FO-F005B	2.00E-03	3.38E-08	1	ELECTRO-HYDRAULIC VALVE FAILS TO OPERATE
B32-HOV-OC-F001A	2.40E-06	1.33E-06	1.55	ELECTRO-HYDRAULIC VALVE FAILS TO REMAIN OPEN
B32-HOV-OC-F001B	2.40E-06	1.33E-06	1.55	ELECTRO-HYDRAULIC VALVE FAILS TO REMAIN OPEN
B32-HOV-OC-F004A	2.40E-06	1.33E-06	1.55	ELECTRO-HYDRAULIC VALVE FAILS TO REMAIN OPEN
B32-HOV-OC-F004B	2.40E-06	1.33E-06	1.55	ELECTRO-HYDRAULIC VALVE FAILS TO REMAIN OPEN
B32-HX_-PG_ALL	5.68E-07	3.09E-07	1.54	CCF of all components in group 'B32-HX_-PG'

Table 14.6-5

High Wind Shutdown Importance Measure Report

CDF = 3.95E-08

Event Name	Probability	Fus Ves	RAW	Description
B32-HX_-PG-HX001A	2.40E-05	1.56E-05	1.65	Heat Exchanger HX001A Plugs
B32-HX_-PG-HX001B	2.40E-05	1.56E-05	1.65	Heat Exchanger HX001B Plugs
B32-HX_-PG-HX002A	2.40E-05	1.56E-05	1.65	Heat Exchanger HX002A Plugs
B32-HX_-PG-HX002B	2.40E-05	1.56E-05	1.65	Heat Exchanger HX002B Plugs
B32-NONCONDENSE	1.00E+00	4.75E-03	1	Non condensable gasses form in ICS sufficiently to require venting
B32-NPO-CC_ALL	5.00E-06	6.19E-08	1.01	CCF of all components in group 'B32-NPO-CC'
B32-NPO-CC-F006A	1.00E-04	2.20E-06	1.02	Condensate return F006A fails to Open
B32-NPO-CC-F006B	1.00E-04	2.20E-06	1.02	Condensate return F006B fails to Open
B32-NPO-OC-F002A	2.40E-06	1.33E-06	1.55	F002A Spuriously closes
B32-NPO-OC-F002B	2.40E-06	1.33E-06	1.55	F002B Spuriously closes
B32-NPO-OC-F003A	2.40E-06	1.33E-06	1.55	F003A Spuriously closes
B32-NPO-OC-F003B	2.40E-06	1.33E-06	1.55	F003B Spuriously closes

Table 14.6-5

High Wind Shutdown Importance Measure Report

CDF = 3.95E-08

Event Name	Probability	Fus Ves	RAW	Description
B32-SOV-FD-F012_1_2	1.85E-05	3.71E-07	1.02	CCF of two components: B32-SOV-FD-F012A & B32-SOV-FD-F012B
B32-SOV-FD-F012_1_3	1.85E-05	3.71E-07	1.02	CCF of two components: B32-SOV-FD-F012A & B32-SOV-FD-F012C
B32-SOV-FD-F012_1_4	1.85E-05	3.71E-07	1.02	CCF of two components: B32-SOV-FD-F012A & B32-SOV-FD-F012D
B32-SOV-FD-F012_2_3	1.85E-05	3.71E-07	1.02	CCF of two components: B32-SOV-FD-F012B & B32-SOV-FD-F012C
B32-SOV-FD-F012_2_4	1.85E-05	3.71E-07	1.02	CCF of two components: B32-SOV-FD-F012B & B32-SOV-FD-F012D
B32-SOV-FD-F012_ALL	5.00E-05	1.04E-06	1.02	CCF of all components in group 'B32-SOV-FD-F012'
B32-SOV-FD-F012A	1.00E-03	2.32E-05	1.02	F012A fails to open on demand
B32-SOV-FD-F012B	1.00E-03	2.32E-05	1.02	SOLENOID VALVE (FAILURE TO DE-ENERGIZE)
B32-SOV-FE-09/10_1_2	7.94E-06	7.65E-07	1.1	CCF of two components: B32-SOV-FE-F009A & B32-SOV-FE-F009B
B32-SOV-FE-09/10_1_3	7.94E-06	7.65E-07	1.1	CCF of two components: B32-SOV-FE-F009A & B32-SOV-FE-F009C
B32-SOV-FE-09/10_1_4	7.94E-06	7.65E-07	1.1	CCF of two components: B32-SOV-FE-F009A & B32-SOV-FE-F009D
B32-SOV-FE-09/10_1_5	7.94E-06	7.65E-07	1.1	CCF of two components: B32-SOV-FE-F009A & B32-SOV-FE-F010A

Table 14.6-5

High Wind Shutdown Importance Measure Report

CDF = 3.95E-08

Event Name	Probability	Fus Ves	RAW	Description
B32-SOV-FE-09/10_1_6	7.94E-06	7.65E-07	1.1	CCF of two components: B32-SOV-FE-F009A & B32-SOV-FE-F010B
B32-SOV-FE-09/10_1_7	7.94E-06	7.65E-07	1.1	CCF of two components: B32-SOV-FE-F009A & B32-SOV-FE-F010C
B32-SOV-FE-09/10_1_8	7.94E-06	7.65E-07	1.1	CCF of two components: B32-SOV-FE-F009A & B32-SOV-FE-F010D
B32-SOV-FE-09/10_2_3	7.94E-06	7.65E-07	1.1	CCF of two components: B32-SOV-FE-F009B & B32-SOV-FE-F009C
B32-SOV-FE-09/10_2_4	7.94E-06	7.65E-07	1.1	CCF of two components: B32-SOV-FE-F009B & B32-SOV-FE-F009D
B32-SOV-FE-09/10_2_5	7.94E-06	7.65E-07	1.1	CCF of two components: B32-SOV-FE-F009B & B32-SOV-FE-F010A
B32-SOV-FE-09/10_2_6	7.94E-06	7.65E-07	1.1	CCF of two components: B32-SOV-FE-F009B & B32-SOV-FE-F010B
B32-SOV-FE-09/10_2_7	7.94E-06	7.65E-07	1.1	CCF of two components: B32-SOV-FE-F009B & B32-SOV-FE-F010C
B32-SOV-FE-09/10_2_8	7.94E-06	7.65E-07	1.1	CCF of two components: B32-SOV-FE-F009B & B32-SOV-FE-F010D
B32-SOV-FE-09/10_3_5	7.94E-06	7.65E-07	1.1	CCF of two components: B32-SOV-FE-F009C & B32-SOV-FE-F010A
B32-SOV-FE-09/10_3_6	7.94E-06	7.65E-07	1.1	CCF of two components: B32-SOV-FE-F009C & B32-SOV-FE-F010B
B32-SOV-FE-09/10_4_5	7.94E-06	7.65E-07	1.1	CCF of two components: B32-SOV-FE-F009D & B32-SOV-FE-F010A

Table 14.6-5

High Wind Shutdown Importance Measure Report

CDF = 3.95E-08

Event Name	Probability	Fus Ves	RAW	Description
B32-SOV-FE-09/10_4_6	7.94E-06	7.65E-07	1.1	CCF of two components: B32-SOV-FE-F009D & B32-SOV-FE-F010B
B32-SOV-FE-09/10_5_6	7.94E-06	7.65E-07	1.1	CCF of two components: B32-SOV-FE-F010A & B32-SOV-FE-F010B
B32-SOV-FE-09/10_5_7	7.94E-06	7.65E-07	1.1	CCF of two components: B32-SOV-FE-F010A & B32-SOV-FE-F010C
B32-SOV-FE-09/10_5_8	7.94E-06	7.65E-07	1.1	CCF of two components: B32-SOV-FE-F010A & B32-SOV-FE-F010D
B32-SOV-FE-09/10_6_7	7.94E-06	7.65E-07	1.1	CCF of two components: B32-SOV-FE-F010B & B32-SOV-FE-F010C
B32-SOV-FE-09/10_6_8	7.94E-06	7.65E-07	1.1	CCF of two components: B32-SOV-FE-F010B & B32-SOV-FE-F010D
B32-SOV-FE-09/10_ALL	5.00E-05	5.36E-06	1.11	CCF of all components in group 'B32-SOV-FE-09/10'
B32-SOV-FE-F009A	1.00E-03	1.21E-04	1.12	F009A fails to open on demand
B32-SOV-FE-F009B	1.00E-03	1.21E-04	1.12	SOLENOID VALVE (FAILURE TO ENERGIZE)
B32-SOV-FE-F010A	1.00E-03	1.21E-04	1.12	F010A fails to open on demand
B32-SOV-FE-F010B	1.00E-03	1.21E-04	1.12	SOLENOID VALVE (FAILURE TO ENERGIZE)
B32-SRV-RO-F011_1_2	3.70E-06	4.50E-08	1.01	CCF of two components: B32-SRV-RO-F011A & B32-SRV-RO-F011B

Table 14.6-5

High Wind Shutdown Importance Measure Report

CDF = 3.95E-08

Event Name	Probability	Fus Ves	RAW	Description
B32-SRV-RO-F011_1_3	3.70E-06	4.50E-08	1.01	CCF of two components: B32-SRV-RO-F011A & B32-SRV-RO-F011C
B32-SRV-RO-F011_1_4	3.70E-06	4.50E-08	1.01	CCF of two components: B32-SRV-RO-F011A & B32-SRV-RO-F011D
B32-SRV-RO-F011_2_3	3.70E-06	4.50E-08	1.01	CCF of two components: B32-SRV-RO-F011B & B32-SRV-RO-F011C
B32-SRV-RO-F011_2_4	3.70E-06	4.50E-08	1.01	CCF of two components: B32-SRV-RO-F011B & B32-SRV-RO-F011D
B32-SRV-RO-F011_ALL	1.00E-05	2.03E-07	1.02	CCF of all components in group 'B32-SRV-RO-F011'
B32-SRV-RO-F011A	2.00E-04	4.39E-06	1.02	RELIEF VALVE F011A FAILS TO OPEN
B32-SRV-RO-F011B	2.00E-04	4.39E-06	1.02	RELIEF VALVE F011B FAIL TO OPEN
B32-TM-LOOPA-IND	3.84E-02	3.03E-02	1.76	ICS LOOP A IN TEST OR MAINTENANCE BY ITSELF
B32-TM-LOOPA-MULT	1.37E-03	1.00E-03	1.73	ICS LOOP A IN TEST OR MAINTENANCE, MULTIPLE LOOPS
B32-TM-LOOPB-IND	3.84E-02	3.03E-02	1.76	ICS LOOP B IN TEST OR MAINTENANCE BY ITSELF
B32-TM-LOOPB-MULT	1.37E-03	1.00E-03	1.73	ICS LOOP B IN TEST OR MAINTENANCE, MULTIPLE LOOPS
B32-XHE-FO-VENT	1.76E-01	4.59E-03	1.02	Operator fails to open vent

Table 14.6-5

High Wind Shutdown Importance Measure Report

CDF = 3.95E-08

Event Name	Probability	Fus Ves	RAW	Description
B32-SOV-FE-F009A	1.00E-03	1.21E-04	1.12	F009A fails to open on demand
B32-SOV-FE-F009B	1.00E-03	1.21E-04	1.12	SOLENOID VALVE (FAILURE TO ENERGIZE)
B32-SOV-FE-F010A	1.00E-03	1.21E-04	1.12	F010A fails to open on demand
B32-SOV-FE-F010B	1.00E-03	1.21E-04	1.12	SOLENOID VALVE (FAILURE TO ENERGIZE)
B32-SRV-RO-F011_1_2	3.70E-06	4.50E-08	1.01	CCF of two components: B32-SRV-RO-F011A & B32-SRV-RO-F011B
B32-SRV-RO-F011_1_3	3.70E-06	4.50E-08	1.01	CCF of two components: B32-SRV-RO-F011A & B32-SRV-RO-F011C
B32-SRV-RO-F011_1_4	3.70E-06	4.50E-08	1.01	CCF of two components: B32-SRV-RO-F011A & B32-SRV-RO-F011D
B32-SRV-RO-F011_2_3	3.70E-06	4.50E-08	1.01	CCF of two components: B32-SRV-RO-F011B & B32-SRV-RO-F011C
C62-CCFSOFTWARE	1.00E-04	1.95E-05	1.19	N-DCIS COMMON CAUSE SOFTWARE FAILURE
C62-CCFSOFTWARE_S	1.00E-04	1.95E-05	1.19	N-DCIS SPURIOUS COMMON CAUSE SOFTWARE FAILURE
C62-DTM-FC-PIPMP_1_2	6.67E-05	1.21E-05	1.18	CCF of two components: C62-DTM-FC-PIPA & C62-DTM-FC-PIPB
C62-LOG-FC-PIPMP_ALL	1.80E-05	2.62E-06	1.14	CCF of all components in group 'C62-LOG-FC-PIPMP'

Table 14.6-5

High Wind Shutdown Importance Measure Report

CDF = 3.95E-08

Event Name	Probability	Fus Ves	RAW	Description
C63-CCFSOFTWARE	1.00E-04	3.04E-01	3.03E+03	Common cause failure of software
C63-CCFSOFTWARE_S	1.00E-04	6.93E-05	1.69	ESF SPURIOUS COMMON CAUSE SOFTWARE FAILURE
C63-DTM-FC-ESFD1	6.00E-04	5.97E-05	1.1	ESF DIV 1 MASTER DTM
C63-DTM-FC-ESFD2	6.00E-04	5.97E-05	1.1	ESF DIV 2 MASTER DTM
C63-DTM-FC-ESFD3	6.00E-04	5.97E-05	1.1	ESF DIV 3 MASTER DTM
C63-DTM-FC-ESFD4	6.00E-04	5.97E-05	1.1	ESF DIV 4 MASTER DTM
C63-DTM-FC-ESFLG_1_2	1.11E-05	5.37E-05	5.82	CCF of two components: C63-DTM-FC-ESFD1 & C63-DTM-FC-ESFD2
C63-DTM-FC-ESFLG_1_2_3	1.11E-06	3.19E-03	2.87E+03	CCF of three components: C63-DTM-FC-ESFD1 & C63-DTM-FC-ESFD2 & C63-DTM-FC-ESFD3
C63-DTM-FC-ESFLG_1_2_4	1.11E-06	3.19E-03	2.87E+03	CCF of three components: C63-DTM-FC-ESFD1 & C63-DTM-FC-ESFD2 & C63-DTM-FC-ESFD4
C63-DTM-FC-ESFLG_1_3	1.11E-05	5.37E-05	5.82	CCF of two components: C63-DTM-FC-ESFD1 & C63-DTM-FC-ESFD3
C63-DTM-FC-ESFLG_1_3_4	1.11E-06	3.19E-03	2.87E+03	CCF of three components: C63-DTM-FC-ESFD1 & C63-DTM-FC-ESFD3 & C63-DTM-FC-ESFD4
C63-DTM-FC-ESFLG_1_4	1.11E-05	5.37E-05	5.82	CCF of two components: C63-DTM-FC-ESFD1 & C63-DTM-FC-ESFD4

Table 14.6-5

High Wind Shutdown Importance Measure Report

CDF = 3.95E-08

Event Name	Probability	Fus Ves	RAW	Description
C63-DTM-FC-ESFLG_2_3	1.11E-05	5.37E-05	5.82	CCF of two components: C63-DTM-FC-ESFD2 & C63-DTM-FC-ESFD3
C63-DTM-FC-ESFLG_2_3_4	1.11E-06	3.19E-03	2.87E+03	CCF of three components: C63-DTM-FC-ESFD2 & C63-DTM-FC-ESFD3 & C63-DTM-FC-ESFD4
C63-DTM-FC-ESFLG_2_4	1.11E-05	5.37E-05	5.82	CCF of two components: C63-DTM-FC-ESFD2 & C63-DTM-FC-ESFD4
C63-DTM-FC-ESFLG_3_4	1.11E-05	5.37E-05	5.82	CCF of two components: C63-DTM-FC-ESFD3 & C63-DTM-FC-ESFD4
C63-DTM-FC-ESFLG_ALL	3.00E-05	9.01E-02	3.00E+03	CCF of all components in group 'C63-DTM-FC-ESFLG'
C63-LDD-FC-ESFLOADS	1.86E-06	5.38E-03	2.89E+03	CCF OF ALL ESF LOAD DRIVERS
C63-LDD-FC-S1B32F009A-B	1.09E-03	6.75E-08	1	LOAD DRIVER FAILS DURING OPERATION
C63-LDD-FC-S1B32F009A-D	1.09E-03	6.75E-08	1	LOAD DRIVER FAILS DURING OPERATION
C63-LDD-FC-S1B32F009B-A	1.09E-03	6.75E-08	1	LOAD DRIVER FAILS DURING OPERATION
C63-LDD-FC-S1B32F009B-C	1.09E-03	6.75E-08	1	LOAD DRIVER FAILS DURING OPERATION
C63-LDD-FC-S1B32F010A-B	1.09E-03	6.75E-08	1	LOAD DRIVER FAILS DURING OPERATION
C63-LDD-FC-S1B32F010A-D	1.09E-03	6.75E-08	1	LOAD DRIVER FAILS DURING OPERATION

Table 14.6-5

High Wind Shutdown Importance Measure Report

CDF = 3.95E-08

Event Name	Probability	Fus Ves	RAW	Description
C63-LDD-FC-S1B32F010B-A	1.09E-03	6.75E-08	1	LOAD DRIVER FAILS DURING OPERATION
C63-LDD-FC-S1B32F010B-C	1.09E-03	6.75E-08	1	LOAD DRIVER FAILS DURING OPERATION
C63-LDD-FC-S1B32F012A-A	1.09E-03	2.54E-05	1.02	LOAD DRIVER FAILS DURING OPERATION
C63-LDD-FC-S1B32F012B-B	1.09E-03	2.54E-05	1.02	LOAD DRIVER FAILS DURING OPERATION
C63-LDD-FC-S2B32F009A-B	1.09E-03	6.75E-08	1	LOAD DRIVER FAILS DURING OPERATION
C63-LDD-FC-S2B32F009A-D	1.09E-03	6.75E-08	1	LOAD DRIVER FAILS DURING OPERATION
C63-LDD-FC-S2B32F009B-A	1.09E-03	6.75E-08	1	LOAD DRIVER FAILS DURING OPERATION
C63-LDD-FC-S2B32F009B-C	1.09E-03	6.75E-08	1	LOAD DRIVER FAILS DURING OPERATION
C63-LDD-FC-S2B32F010A-B	1.09E-03	6.75E-08	1	LOAD DRIVER FAILS DURING OPERATION
C63-LDD-FC-S2B32F010A-D	1.09E-03	6.75E-08	1	LOAD DRIVER FAILS DURING OPERATION
C63-LDD-FC-S2B32F010B-A	1.09E-03	6.75E-08	1	LOAD DRIVER FAILS DURING OPERATION
C63-LDD-FC-S2B32F010B-C	1.09E-03	6.75E-08	1	LOAD DRIVER FAILS DURING OPERATION

Table 14.6-5

High Wind Shutdown Importance Measure Report

CDF = 3.95E-08

Event Name	Probability	Fus Ves	RAW	Description
C63-LDD-FC-S2B32F012A-A	1.09E-03	2.54E-05	1.02	LOAD DRIVER FAILS DURING OPERATION
C63-LDD-FC-S2B32F012B-B	1.09E-03	2.54E-05	1.02	LOAD DRIVER FAILS DURING OPERATION
C63-LOG-FC-ESFLG_ALL	1.80E-05	5.38E-02	2.99E+03	CCF of all components in group 'C63-LOG-FC-ESFLG'
C63-LT_-NO-ESFRX_1_2	5.71E-07	2.03E-06	4.48	CCF of two components: C63-LT_-NO-ESFRXLVLA & C63-LT_-NO-ESFRXLVLB
C63-LT_-NO-ESFRX_1_2_3	1.91E-08	4.21E-05	2.21E+03	CCF of three components: C63-LT_-NO-ESFRXLVLA & C63-LT_-NO-ESFRXLVLB & C63-LT_-N
C63-LT_-NO-ESFRX_1_2_4	1.91E-08	4.21E-05	2.21E+03	CCF of three components: C63-LT_-NO-ESFRXLVLA & C63-LT_-NO-ESFRXLVLB & C63-LT_-N
C63-LT_-NO-ESFRX_1_3	5.71E-07	2.03E-06	4.48	CCF of two components: C63-LT_-NO-ESFRXLVLA & C63-LT_-NO-ESFRXLVLC
C63-LT_-NO-ESFRX_1_3_4	1.91E-08	4.21E-05	2.21E+03	CCF of three components: C63-LT_-NO-ESFRXLVLA & C63-LT_-NO-ESFRXLVLC & C63-LT_-N
C63-LT_-NO-ESFRX_1_4	5.71E-07	2.03E-06	4.48	CCF of two components: C63-LT_-NO-ESFRXLVLA & C63-LT_-NO-ESFRXLVLD
C63-LT_-NO-ESFRX_2_3	5.71E-07	2.03E-06	4.48	CCF of two components: C63-LT_-NO-ESFRXLVLB & C63-LT_-NO-ESFRXLVLC
C63-LT_-NO-ESFRX_2_3_4	1.91E-08	4.21E-05	2.21E+03	CCF of three components: C63-LT_-NO-ESFRXLVLB & C63-LT_-NO-ESFRXLVLC & C63-LT_-N
C63-LT_-NO-ESFRX_2_4	5.71E-07	2.03E-06	4.48	CCF of two components: C63-LT_-NO-ESFRXLVLB & C63-LT_-NO-ESFRXLVLD

Table 14.6-5

High Wind Shutdown Importance Measure Report

CDF = 3.95E-08

Event Name	Probability	Fus Ves	RAW	Description
C63-LT_-NO-ESFRX_3_4	5.71E-07	2.03E-06	4.48	CCF of two components: C63-LT_-NO-ESFRXLVLC & C63-LT_-NO-ESFRXLVLD
C63-LT_-NO-ESFRX_5_6_7	1.91E-08	6.19E-08	4.1	CCF of three components: C63-LT_-NO-ESFRXLVLE & C63-LT_-NO-ESFRXLVLF & C63-LT_-N
C63-LT_-NO-ESFRX_5_6_8	1.91E-08	6.19E-08	4.1	CCF of three components: C63-LT_-NO-ESFRXLVLE & C63-LT_-NO-ESFRXLVLF & C63-LT_-N
C63-LT_-NO-ESFRX_5_7_8	1.91E-08	6.19E-08	4.1	CCF of three components: C63-LT_-NO-ESFRXLVLE & C63-LT_-NO-ESFRXLVLG & C63-LT_-N
C63-LT_-NO-ESFRX_6_7_8	1.91E-08	6.19E-08	4.1	CCF of three components: C63-LT_-NO-ESFRXLVLF & C63-LT_-NO-ESFRXLVLG & C63-LT_-N
C63-LT_-NO-ESFRX_ALL	3.60E-06	8.25E-03	2.29E+03	CCF of all components in group 'C63-LT_-NO-ESFRX'
C63-LT_-NO-ESFRXLVLA	7.20E-05	5.47E-06	1.08	RX LVL A SENSOR TRANMITTER FAILS
C63-LT_-NO-ESFRXLVLB	7.20E-05	5.47E-06	1.08	RX LVL B SENSOR TRANSMITTER FAILS
C63-LT_-NO-ESFRXLVLC	7.20E-05	5.47E-06	1.08	RX LVL C FAILS
C63-LT_-NO-ESFRXLVLD	7.20E-05	5.47E-06	1.08	RX LVL D FAILS
C63-LT_-NO-ESFRX_1_2	5.71E-07	2.03E-06	4.48	CCF of two components: C63-LT_-NO-ESFRXLVLA & C63-LT_-NO-ESFRXLVLB
C63-LT_-NO-ESFRX_1_2_3	1.91E-08	4.21E-05	2.21E+03	CCF of three components: C63-LT_-NO-ESFRXLVLA & C63-LT_-NO-ESFRXLVLB & C63-LT_-N

Table 14.6-5

High Wind Shutdown Importance Measure Report

CDF = 3.95E-08

Event Name	Probability	Fus Ves	RAW	Description
C63-LT_-NO-ESFRX_1_2_4	1.91E-08	4.21E-05	2.21E+03	CCF of three components: C63-LT_-NO-ESFRXLVLA & C63-LT_-NO-ESFRXLVLB & C63-LT_-N
C63-LT_-NO-ESFRX_1_3	5.71E-07	2.03E-06	4.48	CCF of two components: C63-LT_-NO-ESFRXLVLA & C63-LT_-NO-ESFRXLVLC
C63-LT_-NO-ESFRX_1_3_4	1.91E-08	4.21E-05	2.21E+03	CCF of three components: C63-LT_-NO-ESFRXLVLA & C63-LT_-NO-ESFRXLVLC & C63-LT_-N
C63-LT_-NO-ESFRX_1_4	5.71E-07	2.03E-06	4.48	CCF of two components: C63-LT_-NO-ESFRXLVLA & C63-LT_-NO-ESFRXLVLD
C63-LT_-NO-ESFRX_2_3	5.71E-07	2.03E-06	4.48	CCF of two components: C63-LT_-NO-ESFRXLVLB & C63-LT_-NO-ESFRXLVLC
C63-LT_-NO-ESFRX_2_3_4	1.91E-08	4.21E-05	2.21E+03	CCF of three components: C63-LT_-NO-ESFRXLVLB & C63-LT_-NO-ESFRXLVLC & C63-LT_-N
C63-LT_-NO-ESFRX_2_4	5.71E-07	2.03E-06	4.48	CCF of two components: C63-LT_-NO-ESFRXLVLB & C63-LT_-NO-ESFRXLVLD
C63-LT_-NO-ESFRX_3_4	5.71E-07	2.03E-06	4.48	CCF of two components: C63-LT_-NO-ESFRXLVLC & C63-LT_-NO-ESFRXLVLD
C63-LT_-NO-ESFRX_5_6_7	1.91E-08	6.19E-08	4.1	CCF of three components: C63-LT_-NO-ESFRXLVLE & C63-LT_-NO-ESFRXLVLF & C63-LT_-N
C63-LT_-NO-ESFRX_5_6_8	1.91E-08	6.19E-08	4.1	CCF of three components: C63-LT_-NO-ESFRXLVLE & C63-LT_-NO-ESFRXLVLF & C63-LT_-N
C63-LT_-NO-ESFRX_5_7_8	1.91E-08	6.19E-08	4.1	CCF of three components: C63-LT_-NO-ESFRXLVLE & C63-LT_-NO-ESFRXLVLG & C63-LT_-N
C63-LT_-NO-ESFRX_6_7_8	1.91E-08	6.19E-08	4.1	CCF of three components: C63-LT_-NO-ESFRXLVLF & C63-LT_-NO-ESFRXLVLG & C63-LT_-N

Table 14.6-5

High Wind Shutdown Importance Measure Report

CDF = 3.95E-08

Event Name	Probability	Fus Ves	RAW	Description
C63-LT_-NO-ESFRX_ALL	3.60E-06	8.25E-03	2.29E+03	CCF of all components in group 'C63-LT_-NO-ESFRX'
C63-LT_-NO-ESFRXLVLA	7.20E-05	5.47E-06	1.08	RX LVL A SENSOR TRANMITTER FAILS
C63-LT_-NO-ESFRXLVLB	7.20E-05	5.47E-06	1.08	RX LVL B SENSOR TRANSMITTER FAILS
C63-LT_-NO-ESFRXLVLC	7.20E-05	5.47E-06	1.08	RX LVL C FAILS
C63-LT_-NO-ESFRXLVLD	7.20E-05	5.47E-06	1.08	RX LVL D FAILS
C63-MOD-FO-ESFCTTMPA	1.09E-04	8.41E-06	1.08	TRANSDUCER SIGNAL CONVERTER FAILS
C63-MOD-FO-ESFCTTMPB	1.09E-04	8.41E-06	1.08	TRANSDUCER SIGNAL CONVERTER FAILS
C63-MOD-FO-ESFCTTMPC	1.09E-04	8.41E-06	1.08	TRANSDUCER SIGNAL CONVERTER FAILS
C63-MOD-FO-ESFCTTMPD	1.09E-04	8.41E-06	1.08	TRANSDUCER SIGNAL CONVERTER FAILS
C63-MOD-FO-ESFRXLVLA	1.09E-04	8.41E-06	1.08	TRANSDUCER SIGNAL CONVERTER FAILS
C63-MOD-FO-ESFRXLVLB	1.09E-04	8.41E-06	1.08	TRANSDUCER SIGNAL CONVERTER FAILS
C63-MOD-FO-ESFRXLVLC	1.09E-04	8.41E-06	1.08	TRANSDUCER SIGNAL CONVERTER FAILS

Table 14.6-5

High Wind Shutdown Importance Measure Report

CDF = 3.95E-08

Event Name	Probability	Fus Ves	RAW	Description
C63-MOD-FO-ESFRXLVLD	1.09E-04	8.41E-06	1.08	TRANSDUCER SIGNAL CONVERTER FAILS
C63-PSP-FO-ESFEP_ALL	3.60E-07	5.32E-04	1.48E+03	CCF of all components in group 'C63-PSP-FO-ESFEP'
C63-PT_-NO-ESFRX_ALL	1.73E-06	9.51E-07	1.54	CCF of all components in group 'C63-PT_-NO-ESFRX'
C63-TT_-NO-ESFTEMPA	2.52E-05	1.86E-06	1.07	TEMPERATURE A FAILS
C63-TT_-NO-ESFTEMPB	2.52E-05	1.86E-06	1.07	TEMPERATURE B FAILS
C63-TT_-NO-ESFTEMPC	2.52E-05	1.86E-06	1.07	TEMPERATURE C FAILS
C63-TT_-NO-ESFTEMPD	2.52E-05	1.86E-06	1.07	TEMPERATURE D FAILS
E50-BV_-OC-F001A	2.63E-04	2.88E-04	2.09	MAINTENANCE VALVE F001A PLUGS/TRANSFERS CLOSED
E50-BV_-OC-F001D	2.63E-04	2.88E-04	2.09	MAINTENANCE VALVE F001D PLUGS/TRANSFERS CLOSED
E50-BV_-OC-F001E	2.63E-04	2.88E-04	2.09	MAINTENANCE VALVE F001E PLUGS/TRANSFERS CLOSED
E50-BV_-OC-F001H	2.63E-04	2.88E-04	2.09	MAINTENANCE VALVE F001H PLUGS/TRANSFERS CLOSED
E50-BV_-OC-F004A	2.63E-04	7.73E-02	294.77	MAINTENANCE VALVE F004A PLUGS/TRANSFERS CLOSED

Table 14.6-5

High Wind Shutdown Importance Measure Report

CDF = 3.95E-08

Event Name	Probability	Fus Ves	RAW	Description
E50-BV_-OC-F004D	2.63E-04	7.73E-02	294.77	MAINTENANCE VALVE F004D PLUGS/TRANSFERS CLOSED
E50-BV_-OC-F005A	2.63E-04	7.60E-07	1	MAINTENANCE VALVE F005A PLUGS/TRANSFERS CLOSED
E50-BV_-OC-F005B	2.63E-04	7.60E-07	1	MAINTENANCE VALVE F005B PLUGS/TRANSFERS CLOSED
E50-BV_-OC-F005C	2.63E-04	7.60E-07	1	MAINTENANCE VALVE F005C PLUGS/TRANSFERS CLOSED
E50-BV_-OC-F005D	2.63E-04	7.60E-07	1	MAINTENANCE VALVE F005D PLUGS/TRANSFERS CLOSED
E50-BV_-OC-F008A	2.63E-04	7.60E-07	1	MAINTENANCE VALVE F008A PLUGS/TRANSFERS CLOSED
E50-BV_-OC-F008B	2.63E-04	7.60E-07	1	MAINTENANCE VALVE F005B PLUGS/TRANSFERS CLOSED
E50-BV_-OC-F008C	2.63E-04	7.60E-07	1	MAINTENANCE VALVE F005D PLUGS/TRANSFERS CLOSED
E50-BV_-OC-F008D	2.63E-04	7.60E-07	1	MAINTENANCE VALVE F008D PLUGS/TRANSFERS CLOSED
E50-POL-RP-POOLA	7.20E-06	1.94E-03	270.14	GDCS POOLS A LEAKS CATASTROPHICALLY
E50-POL-RP-POOLD	7.20E-06	1.94E-03	270.14	GDCS POOL D LEAKS CATASTROPHICALLY
E50-SQV-CC-EQU_1_2	1.11E-04	4.53E-06	1.04	CCF of two components: E50-SQV-CC-EQU-F006A & E50-SQV-CC-EQU-F006B

Table 14.6-5

High Wind Shutdown Importance Measure Report

CDF = 3.95E-08

Event Name	Probability	Fus Ves	RAW	Description
E50-SQV-CC-EQU_1_2_3	1.11E-05	1.86E-05	2.68	CCF of three components: E50-SQV-CC-EQU-F006A & E50-SQV-CC-EQU-F006B & E50-SQV-C
E50-SQV-CC-EQU_1_2_4	1.11E-05	1.86E-05	2.68	CCF of three components: E50-SQV-CC-EQU-F006A & E50-SQV-CC-EQU-F006B & E50-SQV-C
E50-SQV-CC-EQU_1_3	1.11E-04	4.53E-06	1.04	CCF of two components: E50-SQV-CC-EQU-F006A & E50-SQV-CC-EQU-F006C
E50-SQV-CC-EQU_1_3_4	1.11E-05	1.86E-05	2.68	CCF of three components: E50-SQV-CC-EQU-F006A & E50-SQV-CC-EQU-F006C & E50-SQV-C
E50-SQV-CC-EQU_1_4	1.11E-04	4.53E-06	1.04	CCF of two components: E50-SQV-CC-EQU-F006A & E50-SQV-CC-EQU-F006D
E50-SQV-CC-EQU_2_3	1.11E-04	4.53E-06	1.04	CCF of two components: E50-SQV-CC-EQU-F006B & E50-SQV-CC-EQU-F006C
E50-SQV-CC-EQU_2_3_4	1.11E-05	1.86E-05	2.68	CCF of three components: E50-SQV-CC-EQU-F006B & E50-SQV-CC-EQU-F006C & E50-SQV-C
E50-SQV-CC-EQU_2_4	1.11E-04	4.53E-06	1.04	CCF of two components: E50-SQV-CC-EQU-F006B & E50-SQV-CC-EQU-F006D
E50-SQV-CC-EQU_3_4	1.11E-04	4.53E-06	1.04	CCF of two components: E50-SQV-CC-EQU-F006C & E50-SQV-CC-EQU-F006D
E50-SQV-CC-EQU_ALL	3.00E-04	8.84E-02	295.33	CCF of all components in group 'E50-SQV-CC-EQU'
E50-SQV-CC-EQU-F006A	6.00E-03	2.01E-05	1	SQUIB VALVE F006A FAILS TO OPERATE IN EXTREME CONDITIONS
E50-SQV-CC-EQU-F006B	6.00E-03	2.01E-05	1	SQUIB VALVE F006B FAILS TO OPERATE IN EXTREME CONDITIONS

Table 14.6-5

High Wind Shutdown Importance Measure Report

CDF = 3.95E-08

Event Name	Probability	Fus Ves	RAW	Description
E50-SQV-CC-EQU-F006C	6.00E-03	2.01E-05	1	SQUIB VALVE F006C FAILS TO OPERATE IN EXTREME CONDITIONS
E50-SQV-CC-EQU-F006D	6.00E-03	2.01E-05	1	SQUIB VALVE F006D FAILS TO OPERATE IN EXTREME CONDITIONS
E50-SQV-CC-INJ_1_2	2.38E-05	2.47E-05	2.04	CCF of two components: E50-SQV-CC-INJ-F002A & E50-SQV-CC-INJ-F002B
E50-SQV-CC-INJ_1_2_3	7.94E-07	7.09E-07	1.88	CCF of three components: E50-SQV-CC-INJ-F002A & E50-SQV-CC-INJ-F002B & E50-SQV-C
E50-SQV-CC-INJ_1_2_4	7.94E-07	1.42E-06	2.77	CCF of three components: E50-SQV-CC-INJ-F002A & E50-SQV-CC-INJ-F002B & E50-SQV-C
E50-SQV-CC-INJ_1_2_5	7.94E-07	2.00E-04	252.12	CCF of three components: E50-SQV-CC-INJ-F002A & E50-SQV-CC-INJ-F002B & E50-SQV-C
E50-SQV-CC-INJ_1_2_6	7.94E-07	7.09E-07	1.88	CCF of three components: E50-SQV-CC-INJ-F002A & E50-SQV-CC-INJ-F002B & E50-SQV-C
E50-SQV-CC-INJ_1_2_7	7.94E-07	7.09E-07	1.88	CCF of three components: E50-SQV-CC-INJ-F002A & E50-SQV-CC-INJ-F002B & E50-SQV-C
E50-SQV-CC-INJ_1_2_8	7.94E-07	1.42E-06	2.77	CCF of three components: E50-SQV-CC-INJ-F002A & E50-SQV-CC-INJ-F002B & E50-SQV-C
E50-SQV-CC-INJ_1_3	2.38E-05	2.47E-05	2.04	CCF of two components: E50-SQV-CC-INJ-F002A & E50-SQV-CC-INJ-F002C
E50-SQV-CC-INJ_1_3_4	7.94E-07	1.42E-06	2.77	CCF of three components: E50-SQV-CC-INJ-F002A & E50-SQV-CC-INJ-F002C & E50-SQV-C
E50-SQV-CC-INJ_1_3_5	7.94E-07	2.00E-04	252.12	CCF of three components: E50-SQV-CC-INJ-F002A & E50-SQV-CC-INJ-F002C & E50-SQV-C

Table 14.6-5

High Wind Shutdown Importance Measure Report

CDF = 3.95E-08

Event Name	Probability	Fus Ves	RAW	Description
E50-SQV-CC-INJ_1_3_6	7.94E-07	7.09E-07	1.88	CCF of three components: E50-SQV-CC-INJ-F002A & E50-SQV-CC-INJ-F002C & E50-SQV-C
E50-SQV-CC-INJ_1_3_7	7.94E-07	7.09E-07	1.88	CCF of three components: E50-SQV-CC-INJ-F002A & E50-SQV-CC-INJ-F002C & E50-SQV-C
E50-SQV-CC-INJ_1_3_8	7.94E-07	1.42E-06	2.77	CCF of three components: E50-SQV-CC-INJ-F002A & E50-SQV-CC-INJ-F002C & E50-SQV-C
E50-SQV-CC-INJ_1_4	2.38E-05	4.94E-05	3.07	CCF of two components: E50-SQV-CC-INJ-F002A & E50-SQV-CC-INJ-F002D
E50-SQV-CC-INJ_1_4_5	7.94E-07	2.00E-04	252.12	CCF of three components: E50-SQV-CC-INJ-F002A & E50-SQV-CC-INJ-F002D & E50-SQV-C
E50-SQV-CC-INJ_1_4_6	7.94E-07	1.42E-06	2.77	CCF of three components: E50-SQV-CC-INJ-F002A & E50-SQV-CC-INJ-F002D & E50-SQV-C
E50-SQV-CC-INJ_1_4_7	7.94E-07	1.42E-06	2.77	CCF of three components: E50-SQV-CC-INJ-F002A & E50-SQV-CC-INJ-F002D & E50-SQV-C
E50-SQV-CC-INJ_1_4_8	7.94E-07	2.00E-04	252.12	CCF of three components: E50-SQV-CC-INJ-F002A & E50-SQV-CC-INJ-F002D & E50-SQV-C
E50-SQV-CC-INJ_1_5	2.38E-05	6.66E-03	280.28	CCF of two components: E50-SQV-CC-INJ-F002A & E50-SQV-CC-INJ-F002E
E50-SQV-CC-INJ_1_5_6	7.94E-07	2.00E-04	252.12	CCF of three components: E50-SQV-CC-INJ-F002A & E50-SQV-CC-INJ-F002E & E50-SQV-C
E50-SQV-CC-INJ_1_5_7	7.94E-07	2.00E-04	252.12	CCF of three components: E50-SQV-CC-INJ-F002A & E50-SQV-CC-INJ-F002E & E50-SQV-C
E50-SQV-CC-INJ_1_5_8	7.94E-07	2.00E-04	252.12	CCF of three components: E50-SQV-CC-INJ-F002A & E50-SQV-CC-INJ-F002E & E50-SQV-C

Table 14.6-5

High Wind Shutdown Importance Measure Report

CDF = 3.95E-08

Event Name	Probability	Fus Ves	RAW	Description
E50-SQV-CC-INJ_1_6	2.38E-05	2.47E-05	2.04	CCF of two components: E50-SQV-CC-INJ-F002A & E50-SQV-CC-INJ-F002F
E50-SQV-CC-INJ_1_6_7	7.94E-07	7.09E-07	1.88	CCF of three components: E50-SQV-CC-INJ-F002A & E50-SQV-CC-INJ-F002F & E50-SQV-C
E50-SQV-CC-INJ_1_6_8	7.94E-07	1.42E-06	2.77	CCF of three components: E50-SQV-CC-INJ-F002A & E50-SQV-CC-INJ-F002F & E50-SQV-C
E50-SQV-CC-INJ_1_7	2.38E-05	2.47E-05	2.04	CCF of two components: E50-SQV-CC-INJ-F002A & E50-SQV-CC-INJ-F002G
E50-SQV-CC-INJ_1_7_8	7.94E-07	1.42E-06	2.77	CCF of three components: E50-SQV-CC-INJ-F002A & E50-SQV-CC-INJ-F002G & E50-SQV-C
E50-SQV-CC-INJ_1_8	2.38E-05	4.94E-05	3.07	CCF of two components: E50-SQV-CC-INJ-F002A & E50-SQV-CC-INJ-F002H
E50-SQV-CC-INJ_2_3_4	7.94E-07	7.09E-07	1.88	CCF of three components: E50-SQV-CC-INJ-F002B & E50-SQV-CC-INJ-F002C & E50-SQV-C
E50-SQV-CC-INJ_2_3_5	7.94E-07	7.09E-07	1.88	CCF of three components: E50-SQV-CC-INJ-F002B & E50-SQV-CC-INJ-F002C & E50-SQV-C
E50-SQV-CC-INJ_2_3_8	7.94E-07	7.09E-07	1.88	CCF of three components: E50-SQV-CC-INJ-F002B & E50-SQV-CC-INJ-F002C & E50-SQV-C
E50-SQV-CC-INJ_2_4	2.38E-05	2.47E-05	2.04	CCF of two components: E50-SQV-CC-INJ-F002B & E50-SQV-CC-INJ-F002D
E50-SQV-CC-INJ_2_4_5	7.94E-07	1.42E-06	2.77	CCF of three components: E50-SQV-CC-INJ-F002B & E50-SQV-CC-INJ-F002D & E50-SQV-C
E50-SQV-CC-INJ_2_4_6	7.94E-07	7.09E-07	1.88	CCF of three components: E50-SQV-CC-INJ-F002B & E50-SQV-CC-INJ-F002D & E50-SQV-C

Table 14.6-5

High Wind Shutdown Importance Measure Report

CDF = 3.95E-08

Event Name	Probability	Fus Ves	RAW	Description
E50-SQV-CC-INJ_2_4_7	7.94E-07	7.09E-07	1.88	CCF of three components: E50-SQV-CC-INJ-F002B & E50-SQV-CC-INJ-F002D & E50-SQV-C
E50-SQV-CC-INJ_2_4_8	7.94E-07	2.00E-04	252.12	CCF of three components: E50-SQV-CC-INJ-F002B & E50-SQV-CC-INJ-F002D & E50-SQV-C
E50-SQV-CC-INJ_2_5	2.38E-05	2.47E-05	2.04	CCF of two components: E50-SQV-CC-INJ-F002B & E50-SQV-CC-INJ-F002E
E50-SQV-CC-INJ_2_5_6	7.94E-07	7.09E-07	1.88	CCF of three components: E50-SQV-CC-INJ-F002B & E50-SQV-CC-INJ-F002E & E50-SQV-C
E50-SQV-CC-INJ_2_5_7	7.94E-07	7.09E-07	1.88	CCF of three components: E50-SQV-CC-INJ-F002B & E50-SQV-CC-INJ-F002E & E50-SQV-C
E50-SQV-CC-INJ_2_5_8	7.94E-07	1.42E-06	2.77	CCF of three components: E50-SQV-CC-INJ-F002B & E50-SQV-CC-INJ-F002E & E50-SQV-C
E50-SQV-CC-INJ_2_6_8	7.94E-07	7.09E-07	1.88	CCF of three components: E50-SQV-CC-INJ-F002B & E50-SQV-CC-INJ-F002F & E50-SQV-C
E50-SQV-CC-INJ_2_7_8	7.94E-07	7.09E-07	1.88	CCF of three components: E50-SQV-CC-INJ-F002B & E50-SQV-CC-INJ-F002G & E50-SQV-C
E50-SQV-CC-INJ_2_8	2.38E-05	2.47E-05	2.04	CCF of two components: E50-SQV-CC-INJ-F002B & E50-SQV-CC-INJ-F002H
E50-SQV-CC-INJ_3_4	2.38E-05	2.47E-05	2.04	CCF of two components: E50-SQV-CC-INJ-F002C & E50-SQV-CC-INJ-F002D
E50-SQV-CC-INJ_3_4_5	7.94E-07	1.42E-06	2.77	CCF of three components: E50-SQV-CC-INJ-F002C & E50-SQV-CC-INJ-F002D & E50-SQV-C
E50-SQV-CC-INJ_3_4_6	7.94E-07	7.09E-07	1.88	CCF of three components: E50-SQV-CC-INJ-F002C & E50-SQV-CC-INJ-F002D & E50-SQV-C

Table 14.6-5

High Wind Shutdown Importance Measure Report

CDF = 3.95E-08

Event Name	Probability	Fus Ves	RAW	Description
E50-SQV-CC-INJ_3_4_7	7.94E-07	7.09E-07	1.88	CCF of three components: E50-SQV-CC-INJ-F002C & E50-SQV-CC-INJ-F002D & E50-SQV-C
E50-SQV-CC-INJ_3_4_8	7.94E-07	2.00E-04	252.12	CCF of three components: E50-SQV-CC-INJ-F002C & E50-SQV-CC-INJ-F002D & E50-SQV-C
E50-SQV-CC-INJ_3_5	2.38E-05	2.47E-05	2.04	CCF of two components: E50-SQV-CC-INJ-F002C & E50-SQV-CC-INJ-F002E
E50-SQV-CC-INJ_3_5_6	7.94E-07	7.09E-07	1.88	CCF of three components: E50-SQV-CC-INJ-F002C & E50-SQV-CC-INJ-F002E & E50-SQV-C
E50-SQV-CC-INJ_3_5_7	7.94E-07	7.09E-07	1.88	CCF of three components: E50-SQV-CC-INJ-F002C & E50-SQV-CC-INJ-F002E & E50-SQV-C
E50-SQV-CC-INJ_3_5_8	7.94E-07	1.42E-06	2.77	CCF of three components: E50-SQV-CC-INJ-F002C & E50-SQV-CC-INJ-F002E & E50-SQV-C
E50-SQV-CC-INJ_3_6_8	7.94E-07	7.09E-07	1.88	CCF of three components: E50-SQV-CC-INJ-F002C & E50-SQV-CC-INJ-F002F & E50-SQV-C
E50-SQV-CC-INJ_3_7_8	7.94E-07	7.09E-07	1.88	CCF of three components: E50-SQV-CC-INJ-F002C & E50-SQV-CC-INJ-F002G & E50-SQV-C
E50-SQV-CC-INJ_3_8	2.38E-05	2.47E-05	2.04	CCF of two components: E50-SQV-CC-INJ-F002C & E50-SQV-CC-INJ-F002H
E50-SQV-CC-INJ_4_5	2.38E-05	4.94E-05	3.07	CCF of two components: E50-SQV-CC-INJ-F002D & E50-SQV-CC-INJ-F002E
E50-SQV-CC-INJ_4_5_6	7.94E-07	1.42E-06	2.77	CCF of three components: E50-SQV-CC-INJ-F002D & E50-SQV-CC-INJ-F002E & E50-SQV-C
E50-SQV-CC-INJ_4_5_7	7.94E-07	1.42E-06	2.77	CCF of three components: E50-SQV-CC-INJ-F002D & E50-SQV-CC-INJ-F002E & E50-SQV-C

Table 14.6-5

High Wind Shutdown Importance Measure Report

CDF = 3.95E-08

Event Name	Probability	Fus Ves	RAW	Description
E50-SQV-CC-INJ_4_5_8	7.94E-07	2.00E-04	252.12	CCF of three components: E50-SQV-CC-INJ-F002D & E50-SQV-CC-INJ-F002E & E50-SQV-C
E50-SQV-CC-INJ_4_6	2.38E-05	2.47E-05	2.04	CCF of two components: E50-SQV-CC-INJ-F002D & E50-SQV-CC-INJ-F002F
E50-SQV-CC-INJ_4_6_7	7.94E-07	7.09E-07	1.88	CCF of three components: E50-SQV-CC-INJ-F002D & E50-SQV-CC-INJ-F002F & E50-SQV-C
E50-SQV-CC-INJ_4_6_8	7.94E-07	2.00E-04	252.12	CCF of three components: E50-SQV-CC-INJ-F002D & E50-SQV-CC-INJ-F002F & E50-SQV-C
E50-SQV-CC-INJ_4_7	2.38E-05	2.47E-05	2.04	CCF of two components: E50-SQV-CC-INJ-F002D & E50-SQV-CC-INJ-F002G
E50-SQV-CC-INJ_4_7_8	7.94E-07	2.00E-04	252.12	CCF of three components: E50-SQV-CC-INJ-F002D & E50-SQV-CC-INJ-F002G & E50-SQV-C
E50-SQV-CC-INJ_4_8	2.38E-05	6.66E-03	280.28	CCF of two components: E50-SQV-CC-INJ-F002D & E50-SQV-CC-INJ-F002H
E50-SQV-CC-INJ_5_6	2.38E-05	2.47E-05	2.04	CCF of two components: E50-SQV-CC-INJ-F002E & E50-SQV-CC-INJ-F002F
E50-SQV-CC-INJ_5_6_7	7.94E-07	7.09E-07	1.88	CCF of three components: E50-SQV-CC-INJ-F002E & E50-SQV-CC-INJ-F002F & E50-SQV-C
E50-SQV-CC-INJ_5_6_8	7.94E-07	1.42E-06	2.77	CCF of three components: E50-SQV-CC-INJ-F002E & E50-SQV-CC-INJ-F002F & E50-SQV-C
E50-SQV-CC-INJ_5_7	2.38E-05	2.47E-05	2.04	CCF of two components: E50-SQV-CC-INJ-F002E & E50-SQV-CC-INJ-F002G
E50-SQV-CC-INJ_5_7_8	7.94E-07	1.42E-06	2.77	CCF of three components: E50-SQV-CC-INJ-F002E & E50-SQV-CC-INJ-F002G & E50-SQV-C

Table 14.6-5

High Wind Shutdown Importance Measure Report

CDF = 3.95E-08

Event Name	Probability	Fus Ves	RAW	Description
E50-SQV-CC-INJ_5_8	2.38E-05	4.94E-05	3.07	CCF of two components: E50-SQV-CC-INJ-F002E & E50-SQV-CC-INJ-F002H
E50-SQV-CC-INJ_6_7_8	7.94E-07	7.09E-07	1.88	CCF of three components: E50-SQV-CC-INJ-F002F & E50-SQV-CC-INJ-F002G & E50-SQV-C
E50-SQV-CC-INJ_6_8	2.38E-05	2.47E-05	2.04	CCF of two components: E50-SQV-CC-INJ-F002F & E50-SQV-CC-INJ-F002H
E50-SQV-CC-INJ_7_8	2.38E-05	2.47E-05	2.04	CCF of two components: E50-SQV-CC-INJ-F002G & E50-SQV-CC-INJ-F002H
E50-SQV-CC-INJ_ALL	1.50E-04	4.38E-02	292.38	CCF of all components in group 'E50-SQV-CC-INJ'
E50-SQV-CC-INJ-F002A	3.00E-03	3.55E-03	2.18	SQUIB VALVE F002A FAILS TO OPERATE
E50-SQV-CC-INJ-F002D	3.00E-03	3.55E-03	2.18	SQUIB VALVE F002D FAILS TO OPERATE
E50-SQV-CC-INJ-F002E	3.00E-03	3.55E-03	2.18	SQUIB VALVE F002E FAILS TO OPERATE
E50-SQV-CC-INJ-F002H	3.00E-03	3.55E-03	2.18	SQUIB VALVE F002H FAILS TO OPERATE
E50-SQV-CO-F009A	9.60E-06	2.62E-03	273.01	SQUIB DELUGE VALVE F009A SPUR. OPENING [#7]
E50-SQV-CO-F009D	9.60E-06	2.62E-03	273.01	SQUIB DELUGE VALVE F009D SPUR. OPENING [#7]
E50-SQV-CO-F009E	9.60E-06	2.62E-03	273.01	SQUIB DELUGE VALVE F009E SPUR. OPENING [#7]

Table 14.6-5

High Wind Shutdown Importance Measure Report

CDF = 3.95E-08

Event Name	Probability	Fus Ves	RAW	Description
E50-SQV-CO-F009H	9.60E-06	2.62E-03	273.01	SQUIB DELUGE VALVE F009H SPUR. OPENING [#7]
E50-SQV-CO-F009J	9.60E-06	2.62E-03	273.01	SQUIB DELUGE VALVE F009J SPUR. OPENING [#7]
E50-SQV-CO-F009M	9.60E-06	2.62E-03	273.01	SQUIB DELUGE VALVE F009M SPUR. OPENING [#7]
E50-STR-PG_1_2	4.44E-06	1.29E-07	1.03	CCF of two components: E50-STR-PG-D002A & E50-STR-PG-D002B
E50-STR-PG_1_2_3	4.44E-07	5.74E-07	2.29	CCF of three components: E50-STR-PG-D002A & E50-STR-PG-D002B & E50-STR-PG-D002C
E50-STR-PG_1_2_4	4.44E-07	5.74E-07	2.29	CCF of three components: E50-STR-PG-D002A & E50-STR-PG-D002B & E50-STR-PG-D002D
E50-STR-PG_1_3	4.44E-06	1.29E-07	1.03	CCF of two components: E50-STR-PG-D002A & E50-STR-PG-D002C
E50-STR-PG_1_3_4	4.44E-07	5.74E-07	2.29	CCF of three components: E50-STR-PG-D002A & E50-STR-PG-D002C & E50-STR-PG-D002D
E50-STR-PG_1_4	4.44E-06	1.29E-07	1.03	CCF of two components: E50-STR-PG-D002A & E50-STR-PG-D002D
E50-STR-PG_2_3	4.44E-06	1.29E-07	1.03	CCF of two components: E50-STR-PG-D002B & E50-STR-PG-D002C
E50-STR-PG_2_3_4	4.44E-07	5.74E-07	2.29	CCF of three components: E50-STR-PG-D002B & E50-STR-PG-D002C & E50-STR-PG-D002D
E50-STR-PG_2_4	4.44E-06	1.29E-07	1.03	CCF of two components: E50-STR-PG-D002B & E50-STR-PG-D002D

Table 14.6-5

High Wind Shutdown Importance Measure Report

CDF = 3.95E-08

Event Name	Probability	Fus Ves	RAW	Description
E50-STR-PG_3_4	4.44E-06	1.29E-07	1.03	CCF of two components: E50-STR-PG-D002C & E50-STR-PG-D002D
E50-STR-PG_ALL	1.20E-05	3.30E-03	275.06	CCF of all components in group 'E50-STR-PG'
E50-STR-PG-D002A	2.40E-04	6.75E-07	1	STRAINER/FILTER D002A PLUGS DURING OPERATION
E50-STR-PG-D002B	2.40E-04	6.75E-07	1	STRAINER/FILTER D002B PLUGS DURING OPERATION
E50-STR-PG-D002C	2.40E-04	6.75E-07	1	STRAINER/FILTER D002C PLUGS DURING OPERATION
E50-STR-PG-D002D	2.40E-04	6.75E-07	1	STRAINER/FILTER D002D PLUGS DURING OPERATION
E50-UV_-CC-EQU_1_2_3	2.82E-07	3.21E-07	2.14	CCF of three components: E50-UV_-CC-EQU-F007A & E50-UV_-CC-EQU-F007B & E50-UV_-C
E50-UV_-CC-EQU_1_2_4	2.82E-07	3.21E-07	2.14	CCF of three components: E50-UV_-CC-EQU-F007A & E50-UV_-CC-EQU-F007B & E50-UV_-C
E50-UV_-CC-EQU_1_3_4	2.82E-07	3.21E-07	2.14	CCF of three components: E50-UV_-CC-EQU-F007A & E50-UV_-CC-EQU-F007C & E50-UV_-C
E50-UV_-CC-EQU_2_3_4	2.82E-07	3.21E-07	2.14	CCF of three components: E50-UV_-CC-EQU-F007B & E50-UV_-CC-EQU-F007C & E50-UV_-C
E50-UV_-CC-EQU_ALL	1.72E-06	4.42E-04	258.08	CCF of all components in group 'E50-UV_-CC-EQU'
E50-UV_-CC-EQU-F007A	1.00E-04	2.14E-07	1	CHECK VALVE F007A FAILS TO OPEN

Table 14.6-5

High Wind Shutdown Importance Measure Report

CDF = 3.95E-08

Event Name	Probability	Fus Ves	RAW	Description
E50-UV_-CC-EQU-F007B	1.00E-04	2.14E-07	1	CHECK VALVE F007B FAILS TO OPEN
E50-UV_-CC-EQU-F007C	1.00E-04	2.14E-07	1	CHECK VALVE F007C FAILS TO OPEN
E50-UV_-CC-EQU-F007D	1.00E-04	2.14E-07	1	CHECK VALVE F007D FAILS TO OPEN
E50-UV_-CC-INJ_1_2	1.52E-07	1.18E-07	1.76	CCF of two components: E50-UV_-CC-INJ-F003A & E50-UV_-CC-INJ-F003B
E50-UV_-CC-INJ_1_2_3	4.03E-07	3.09E-07	1.75	CCF of three components: E50-UV_-CC-INJ-F003A & E50-UV_-CC-INJ-F003B & E50-UV_-C
E50-UV_-CC-INJ_1_2_4	4.03E-07	6.19E-07	2.51	CCF of three components: E50-UV_-CC-INJ-F003A & E50-UV_-CC-INJ-F003B & E50-UV_-C
E50-UV_-CC-INJ_1_2_5	4.03E-07	9.94E-05	247.5	CCF of three components: E50-UV_-CC-INJ-F003A & E50-UV_-CC-INJ-F003B & E50-UV_-C
E50-UV_-CC-INJ_1_2_6	4.03E-07	3.09E-07	1.75	CCF of three components: E50-UV_-CC-INJ-F003A & E50-UV_-CC-INJ-F003B & E50-UV_-C
E50-UV_-CC-INJ_1_2_7	4.03E-07	3.09E-07	1.75	CCF of three components: E50-UV_-CC-INJ-F003A & E50-UV_-CC-INJ-F003B & E50-UV_-C
E50-UV_-CC-INJ_1_2_8	4.03E-07	6.19E-07	2.51	CCF of three components: E50-UV_-CC-INJ-F003A & E50-UV_-CC-INJ-F003B & E50-UV_-C
E50-UV_-CC-INJ_1_3	1.52E-07	1.18E-07	1.76	CCF of two components: E50-UV_-CC-INJ-F003A & E50-UV_-CC-INJ-F003C
E50-UV_-CC-INJ_1_3_4	4.03E-07	6.19E-07	2.51	CCF of three components: E50-UV_-CC-INJ-F003A & E50-UV_-CC-INJ-F003C & E50-UV_-C

Table 14.6-5

High Wind Shutdown Importance Measure Report

CDF = 3.95E-08

Event Name	Probability	Fus Ves	RAW	Description
E50-UV_-CC-INJ_1_3_5	4.03E-07	9.94E-05	247.5	CCF of three components: E50-UV_-CC-INJ-F003A & E50-UV_-CC-INJ-F003C & E50-UV_-C
E50-UV_-CC-INJ_1_3_6	4.03E-07	3.09E-07	1.75	CCF of three components: E50-UV_-CC-INJ-F003A & E50-UV_-CC-INJ-F003C & E50-UV_-C
E50-UV_-CC-INJ_1_3_7	4.03E-07	3.09E-07	1.75	CCF of three components: E50-UV_-CC-INJ-F003A & E50-UV_-CC-INJ-F003C & E50-UV_-C
E50-UV_-CC-INJ_1_3_8	4.03E-07	6.19E-07	2.51	CCF of three components: E50-UV_-CC-INJ-F003A & E50-UV_-CC-INJ-F003C & E50-UV_-C
E50-UV_-CC-INJ_1_4	1.52E-07	2.36E-07	2.51	CCF of two components: E50-UV_-CC-INJ-F003A & E50-UV_-CC-INJ-F003D
E50-UV_-CC-INJ_1_4_5	4.03E-07	9.94E-05	247.5	CCF of three components: E50-UV_-CC-INJ-F003A & E50-UV_-CC-INJ-F003D & E50-UV_-C
E50-UV_-CC-INJ_1_4_6	4.03E-07	6.19E-07	2.51	CCF of three components: E50-UV_-CC-INJ-F003A & E50-UV_-CC-INJ-F003D & E50-UV_-C
E50-UV_-CC-INJ_1_4_7	4.03E-07	6.19E-07	2.51	CCF of three components: E50-UV_-CC-INJ-F003A & E50-UV_-CC-INJ-F003D & E50-UV_-C
E50-UV_-CC-INJ_1_4_8	4.03E-07	9.94E-05	247.5	CCF of three components: E50-UV_-CC-INJ-F003A & E50-UV_-CC-INJ-F003D & E50-UV_-C
E50-UV_-CC-INJ_1_5	1.52E-07	3.66E-05	240.77	CCF of two components: E50-UV_-CC-INJ-F003A & E50-UV_-CC-INJ-F003E
E50-UV_-CC-INJ_1_5_6	4.03E-07	9.94E-05	247.5	CCF of three components: E50-UV_-CC-INJ-F003A & E50-UV_-CC-INJ-F003E & E50-UV_-C
E50-UV_-CC-INJ_1_5_7	4.03E-07	9.94E-05	247.5	CCF of three components: E50-UV_-CC-INJ-F003A & E50-UV_-CC-INJ-F003E & E50-UV_-C

Table 14.6-5

High Wind Shutdown Importance Measure Report

CDF = 3.95E-08

Event Name	Probability	Fus Ves	RAW	Description
E50-UV_-CC-INJ_1_5_8	4.03E-07	9.94E-05	247.5	CCF of three components: E50-UV_-CC-INJ-F003A & E50-UV_-CC-INJ-F003E & E50-UV_-C
E50-UV_-CC-INJ_1_6	1.52E-07	1.18E-07	1.76	CCF of two components: E50-UV_-CC-INJ-F003A & E50-UV_-CC-INJ-F003F
E50-UV_-CC-INJ_1_6_7	4.03E-07	3.09E-07	1.75	CCF of three components: E50-UV_-CC-INJ-F003A & E50-UV_-CC-INJ-F003F & E50-UV_-C
E50-UV_-CC-INJ_1_6_8	4.03E-07	6.19E-07	2.51	CCF of three components: E50-UV_-CC-INJ-F003A & E50-UV_-CC-INJ-F003F & E50-UV_-C
E50-UV_-CC-INJ_1_7	1.52E-07	1.18E-07	1.76	CCF of two components: E50-UV_-CC-INJ-F003A & E50-UV_-CC-INJ-F003G
E50-UV_-CC-INJ_1_7_8	4.03E-07	6.19E-07	2.51	CCF of three components: E50-UV_-CC-INJ-F003A & E50-UV_-CC-INJ-F003G & E50-UV_-C
E50-UV_-CC-INJ_1_8	1.52E-07	2.36E-07	2.51	CCF of two components: E50-UV_-CC-INJ-F003A & E50-UV_-CC-INJ-F003H
E50-UV_-CC-INJ_2_3_4	4.03E-07	3.09E-07	1.75	CCF of three components: E50-UV_-CC-INJ-F003B & E50-UV_-CC-INJ-F003C & E50-UV_-C
E50-UV_-CC-INJ_2_3_5	4.03E-07	3.09E-07	1.75	CCF of three components: E50-UV_-CC-INJ-F003B & E50-UV_-CC-INJ-F003C & E50-UV_-C
E50-UV_-CC-INJ_2_3_8	4.03E-07	3.09E-07	1.75	CCF of three components: E50-UV_-CC-INJ-F003B & E50-UV_-CC-INJ-F003C & E50-UV_-C
E50-UV_-CC-INJ_2_4	1.52E-07	1.18E-07	1.76	CCF of two components: E50-UV_-CC-INJ-F003B & E50-UV_-CC-INJ-F003D
E50-UV_-CC-INJ_2_4_5	4.03E-07	6.19E-07	2.51	CCF of three components: E50-UV_-CC-INJ-F003B & E50-UV_-CC-INJ-F003D & E50-UV_-C

Table 14.6-5

High Wind Shutdown Importance Measure Report

CDF = 3.95E-08

Event Name	Probability	Fus Ves	RAW	Description
E50-UV_-CC-INJ_2_4_6	4.03E-07	3.09E-07	1.75	CCF of three components: E50-UV_-CC-INJ-F003B & E50-UV_-CC-INJ-F003D & E50-UV_-C
E50-UV_-CC-INJ_2_4_7	4.03E-07	3.09E-07	1.75	CCF of three components: E50-UV_-CC-INJ-F003B & E50-UV_-CC-INJ-F003D & E50-UV_-C
E50-UV_-CC-INJ_2_4_8	4.03E-07	9.94E-05	247.5	CCF of three components: E50-UV_-CC-INJ-F003B & E50-UV_-CC-INJ-F003D & E50-UV_-C
E50-UV_-CC-INJ_2_5	1.52E-07	1.18E-07	1.76	CCF of two components: E50-UV_-CC-INJ-F003B & E50-UV_-CC-INJ-F003E
E50-UV_-CC-INJ_2_5_6	4.03E-07	3.09E-07	1.75	CCF of three components: E50-UV_-CC-INJ-F003B & E50-UV_-CC-INJ-F003E & E50-UV_-C
E50-UV_-CC-INJ_2_5_7	4.03E-07	3.09E-07	1.75	CCF of three components: E50-UV_-CC-INJ-F003B & E50-UV_-CC-INJ-F003E & E50-UV_-C
E50-UV_-CC-INJ_2_5_8	4.03E-07	6.19E-07	2.51	CCF of three components: E50-UV_-CC-INJ-F003B & E50-UV_-CC-INJ-F003E & E50-UV_-C
E50-UV_-CC-INJ_2_6_8	4.03E-07	3.09E-07	1.75	CCF of three components: E50-UV_-CC-INJ-F003B & E50-UV_-CC-INJ-F003F & E50-UV_-C
E50-UV_-CC-INJ_2_7_8	4.03E-07	3.09E-07	1.75	CCF of three components: E50-UV_-CC-INJ-F003B & E50-UV_-CC-INJ-F003G & E50-UV_-C
E50-UV_-CC-INJ_2_8	1.52E-07	1.18E-07	1.76	CCF of two components: E50-UV_-CC-INJ-F003B & E50-UV_-CC-INJ-F003H
E50-UV_-CC-INJ_3_4	1.52E-07	1.18E-07	1.76	CCF of two components: E50-UV_-CC-INJ-F003C & E50-UV_-CC-INJ-F003D
E50-UV_-CC-INJ_3_4_5	4.03E-07	6.19E-07	2.51	CCF of three components: E50-UV_-CC-INJ-F003C & E50-UV_-CC-INJ-F003D & E50-UV_-C

Table 14.6-5

High Wind Shutdown Importance Measure Report

CDF = 3.95E-08

Event Name	Probability	Fus Ves	RAW	Description
E50-UV_-CC-INJ_3_4_6	4.03E-07	3.09E-07	1.75	CCF of three components: E50-UV_-CC-INJ-F003C & E50-UV_-CC-INJ-F003D & E50-UV_-C
E50-UV_-CC-INJ_3_4_7	4.03E-07	3.09E-07	1.75	CCF of three components: E50-UV_-CC-INJ-F003C & E50-UV_-CC-INJ-F003D & E50-UV_-C
E50-UV_-CC-INJ_3_4_8	4.03E-07	9.94E-05	247.5	CCF of three components: E50-UV_-CC-INJ-F003C & E50-UV_-CC-INJ-F003D & E50-UV_-C
E50-UV_-CC-INJ_3_5	1.52E-07	1.18E-07	1.76	CCF of two components: E50-UV_-CC-INJ-F003C & E50-UV_-CC-INJ-F003E
E50-UV_-CC-INJ_3_5_6	4.03E-07	3.09E-07	1.75	CCF of three components: E50-UV_-CC-INJ-F003C & E50-UV_-CC-INJ-F003E & E50-UV_-C
E50-UV_-CC-INJ_3_5_7	4.03E-07	3.09E-07	1.75	CCF of three components: E50-UV_-CC-INJ-F003C & E50-UV_-CC-INJ-F003E & E50-UV_-C
E50-UV_-CC-INJ_3_5_8	4.03E-07	6.19E-07	2.51	CCF of three components: E50-UV_-CC-INJ-F003C & E50-UV_-CC-INJ-F003E & E50-UV_-C
E50-UV_-CC-INJ_3_6_8	4.03E-07	3.09E-07	1.75	CCF of three components: E50-UV_-CC-INJ-F003C & E50-UV_-CC-INJ-F003F & E50-UV_-C
E50-UV_-CC-INJ_3_7_8	4.03E-07	3.09E-07	1.75	CCF of three components: E50-UV_-CC-INJ-F003C & E50-UV_-CC-INJ-F003G & E50-UV_-C
E50-UV_-CC-INJ_3_8	1.52E-07	1.18E-07	1.76	CCF of two components: E50-UV_-CC-INJ-F003C & E50-UV_-CC-INJ-F003H
E50-UV_-CC-INJ_4_5	1.52E-07	2.36E-07	2.51	CCF of two components: E50-UV_-CC-INJ-F003D & E50-UV_-CC-INJ-F003E
E50-UV_-CC-INJ_4_5_6	4.03E-07	6.19E-07	2.51	CCF of three components: E50-UV_-CC-INJ-F003D & E50-UV_-CC-INJ-F003E & E50-UV_-C

Table 14.6-5

High Wind Shutdown Importance Measure Report

CDF = 3.95E-08

Event Name	Probability	Fus Ves	RAW	Description
E50-UV_-CC-INJ_4_5_7	4.03E-07	6.19E-07	2.51	CCF of three components: E50-UV_-CC-INJ-F003D & E50-UV_-CC-INJ-F003E & E50-UV_-C
E50-UV_-CC-INJ_4_5_8	4.03E-07	9.94E-05	247.5	CCF of three components: E50-UV_-CC-INJ-F003D & E50-UV_-CC-INJ-F003E & E50-UV_-C
E50-UV_-CC-INJ_4_6	1.52E-07	1.18E-07	1.76	CCF of two components: E50-UV_-CC-INJ-F003D & E50-UV_-CC-INJ-F003F
E50-UV_-CC-INJ_4_6_7	4.03E-07	3.09E-07	1.75	CCF of three components: E50-UV_-CC-INJ-F003D & E50-UV_-CC-INJ-F003F & E50-UV_-C
E50-UV_-CC-INJ_4_6_8	4.03E-07	9.94E-05	247.5	CCF of three components: E50-UV_-CC-INJ-F003D & E50-UV_-CC-INJ-F003F & E50-UV_-C
E50-UV_-CC-INJ_4_7	1.52E-07	1.18E-07	1.76	CCF of two components: E50-UV_-CC-INJ-F003D & E50-UV_-CC-INJ-F003G
E50-UV_-CC-INJ_4_7_8	4.03E-07	9.94E-05	247.5	CCF of three components: E50-UV_-CC-INJ-F003D & E50-UV_-CC-INJ-F003G & E50-UV_-C
E50-UV_-CC-INJ_4_8	1.52E-07	3.66E-05	240.77	CCF of two components: E50-UV_-CC-INJ-F003D & E50-UV_-CC-INJ-F003H
E50-UV_-CC-INJ_5_6	1.52E-07	1.18E-07	1.76	CCF of two components: E50-UV_-CC-INJ-F003E & E50-UV_-CC-INJ-F003F
E50-UV_-CC-INJ_5_6_7	4.03E-07	3.09E-07	1.75	CCF of three components: E50-UV_-CC-INJ-F003E & E50-UV_-CC-INJ-F003F & E50-UV_-C
E50-UV_-CC-INJ_5_6_8	4.03E-07	6.19E-07	2.51	CCF of three components: E50-UV_-CC-INJ-F003E & E50-UV_-CC-INJ-F003F & E50-UV_-C
E50-UV_-CC-INJ_5_7	1.52E-07	1.18E-07	1.76	CCF of two components: E50-UV_-CC-INJ-F003E & E50-UV_-CC-INJ-F003G

Table 14.6-5

High Wind Shutdown Importance Measure Report

CDF = 3.95E-08

Event Name	Probability	Fus Ves	RAW	Description
E50-UV_-CC-INJ_5_7_8	4.03E-07	6.19E-07	2.51	CCF of three components: E50-UV_-CC-INJ-F003E & E50-UV_-CC-INJ-F003G & E50-UV_-C
E50-UV_-CC-INJ_5_8	1.52E-07	2.36E-07	2.51	CCF of two components: E50-UV_-CC-INJ-F003E & E50-UV_-CC-INJ-F003H
E50-UV_-CC-INJ_6_7_8	4.03E-07	3.09E-07	1.75	CCF of three components: E50-UV_-CC-INJ-F003F & E50-UV_-CC-INJ-F003G & E50-UV_-C
E50-UV_-CC-INJ_6_8	1.52E-07	1.18E-07	1.76	CCF of two components: E50-UV_-CC-INJ-F003F & E50-UV_-CC-INJ-F003H
E50-UV_-CC-INJ_7_8	1.52E-07	1.18E-07	1.76	CCF of two components: E50-UV_-CC-INJ-F003G & E50-UV_-CC-INJ-F003H
E50-UV_-CC-INJ_ALL	1.72E-05	4.76E-03	277.84	CCF of all components in group 'E50-UV_-CC-INJ'
E50-UV_-CC-INJ-F003A	1.00E-03	1.14E-03	2.14	INJECTION CHECK VALVE F003A FAILS TO OPEN
E50-UV_-CC-INJ-F003D	1.00E-03	1.14E-03	2.14	INJECTION CHECK VALVE F003D FAILS TO OPEN
E50-UV_-CC-INJ-F003E	1.00E-03	1.14E-03	2.14	INJECTION CHECK VALVE F003E FAILS TO OPEN
E50-UV_-CC-INJ-F003H	1.00E-03	1.14E-03	2.14	INJECTION CHECK VALVE F003H FAILS TO OPEN
E50-UV_-OC-INJ-F003A	4.80E-06	4.65E-06	1.96	INJECTION CHECK VALVE F003A FAILS TO REMAIN OPEN OR PLUG
E50-UV_-OC-INJ-F003D	4.80E-06	4.65E-06	1.96	INJECTION CHECK VALVE F003D FAILS TO REMAIN OPEN OR PLUG

Table 14.6-5

High Wind Shutdown Importance Measure Report

CDF = 3.95E-08

Event Name	Probability	Fus Ves	RAW	Description
E50-UV_-OC-INJ-F003E	4.80E-06	4.65E-06	1.96	INJECTION CHECK VALVE F003E FAILS TO REMAIN OPEN OR PLUG
E50-UV_-OC-INJ-F003H	4.80E-06	4.65E-06	1.96	INJECTION CHECK VALVE F003H FAILS TO REMAIN OPEN OR PLUG
E50-XHE-FO-EQU	1.61E-03	3.22E-06	1	OPERATOR FAILS TO ACTUATE GDCS
E50-XHE-FO-GDCS	1.61E-03	3.22E-06	1	OPERATOR FAILS TO ACTUATE GDCS
FL_M5-LOPP010	1.00E+00	1.08E-01	1	Sequence tag for M5-LOPP010
FL_M5-LOPP011	1.00E+00	7.60E-02	1	Sequence tag for M5-LOPP011
FL_M5-LOPP016	1.00E+00	1.88E-01	1	Sequence tag for M5-LOPP016
FL_M5O-LOPP009	1.00E+00	3.30E-01	1	Sequence tag for M5O-LOPP009
FL_M5O-LOPP010	1.00E+00	8.20E-02	1	Sequence tag for M5O-LOPP010
FL_M5O-LOPP0123	1.00E+00	7.12E-06	1	Sequence tag for M5O-LOPP014
FL_M5O-LOPP014	1.00E+00	1.54E-02	1	Sequence tag for M5O-LOPP014
FL_M5O-LOPP015	1.00E+00	2.01E-01	1	Sequence tag for M5O-LOPP015

Table 14.6-5

High Wind Shutdown Importance Measure Report

CDF = 3.95E-08

Event Name	Probability	Fus Ves	RAW	Description
FL_M5O-LOPP016	1.00E+00	1.17E-04	1	Sequence tag for M5O-LOPP016
FL_M6U-LOPP008	1.00E+00	2.81E-04	1	Sequence tag for M6U-LOPP007
G21-BV_-CC-F346	1.00E-04	1.52E-04	2.49	MANUAL VALVE FAILS TO OPEN
G21-BV_-OC-F334	7.20E-07	2.04E-05	29.2	MANUAL VALVE F334 PLUGS-TRANSFERS CLOSED
G21-FT_-NO_1_2	1.10E-05	1.27E-06	1.11	CCF of two components: G21-FT_-NO-N014A & G21-FT_-NO-N014B
G21-MOV-CC_1_2	4.12E-06	8.44E-08	1.02	CCF of two components: G21-MOV-CC-F011A & G21-MOV-CC-F011B
G21-MOV-CC_1_2_3	4.08E-06	2.81E-08	1.01	CCF of three components: G21-MOV-CC-F011A & G21-MOV-CC-F011B & G21-MOV-CC-F013A
G21-MOV-CC_1_2_4	4.08E-06	2.81E-08	1.01	CCF of three components: G21-MOV-CC-F011A & G21-MOV-CC-F011B & G21-MOV-CC-F013B
G21-MOV-CC_1_2_5	4.08E-06	2.81E-08	1.01	CCF of three components: G21-MOV-CC-F011A & G21-MOV-CC-F011B & G21-MOV-CC-F014A
G21-MOV-CC_1_2_6	4.08E-06	2.81E-08	1.01	CCF of three components: G21-MOV-CC-F011A & G21-MOV-CC-F011B & G21-MOV-CC-F014B
G21-MOV-CC_1_3_4	4.08E-06	2.81E-08	1.01	CCF of three components: G21-MOV-CC-F011A & G21-MOV-CC-F013A & G21-MOV-CC-F013B
G21-MOV-CC_1_3_6	4.08E-06	2.81E-08	1.01	CCF of three components: G21-MOV-CC-F011A & G21-MOV-CC-F013A & G21-MOV-CC-F014B

Table 14.6-5

High Wind Shutdown Importance Measure Report

CDF = 3.95E-08

Event Name	Probability	Fus Ves	RAW	Description
G21-MOV-CC_1_4	4.12E-06	8.44E-08	1.02	CCF of two components: G21-MOV-CC-F011A & G21-MOV-CC-F013B
G21-MOV-CC_1_4_5	4.08E-06	2.81E-08	1.01	CCF of three components: G21-MOV-CC-F011A & G21-MOV-CC-F013B & G21-MOV-CC-F014A
G21-MOV-CC_1_4_6	4.08E-06	2.81E-08	1.01	CCF of three components: G21-MOV-CC-F011A & G21-MOV-CC-F013B & G21-MOV-CC-F014B
G21-MOV-CC_1_5_6	4.08E-06	2.81E-08	1.01	CCF of three components: G21-MOV-CC-F011A & G21-MOV-CC-F014A & G21-MOV-CC-F014B
G21-MOV-CC_1_6	4.12E-06	8.44E-08	1.02	CCF of two components: G21-MOV-CC-F011A & G21-MOV-CC-F014B
G21-MOV-CC_2_3	4.12E-06	8.44E-08	1.02	CCF of two components: G21-MOV-CC-F011B & G21-MOV-CC-F013A
G21-MOV-CC_2_3_4	4.08E-06	2.81E-08	1.01	CCF of three components: G21-MOV-CC-F011B & G21-MOV-CC-F013A & G21-MOV-CC-F013B
G21-MOV-CC_2_3_5	4.08E-06	2.81E-08	1.01	CCF of three components: G21-MOV-CC-F011B & G21-MOV-CC-F013A & G21-MOV-CC-F014A
G21-MOV-CC_2_3_6	4.08E-06	2.81E-08	1.01	CCF of three components: G21-MOV-CC-F011B & G21-MOV-CC-F013A & G21-MOV-CC-F014B
G21-MOV-CC_2_4_5	4.08E-06	2.81E-08	1.01	CCF of three components: G21-MOV-CC-F011B & G21-MOV-CC-F013B & G21-MOV-CC-F014A
G21-MOV-CC_2_5	4.12E-06	8.44E-08	1.02	CCF of two components: G21-MOV-CC-F011B & G21-MOV-CC-F014A
G21-MOV-CC_2_5_6	4.08E-06	2.81E-08	1.01	CCF of three components: G21-MOV-CC-F011B & G21-MOV-CC-F014A & G21-MOV-CC-F014B

Table 14.6-5

High Wind Shutdown Importance Measure Report

CDF = 3.95E-08

Event Name	Probability	Fus Ves	RAW	Description
G21-MOV-CC_3_4	4.12E-06	8.44E-08	1.02	CCF of two components: G21-MOV-CC-F013A & G21-MOV-CC-F013B
G21-MOV-CC_3_4_5	4.08E-06	2.81E-08	1.01	CCF of three components: G21-MOV-CC-F013A & G21-MOV-CC-F013B & G21-MOV-CC-F014A
G21-MOV-CC_3_4_6	4.08E-06	2.81E-08	1.01	CCF of three components: G21-MOV-CC-F013A & G21-MOV-CC-F013B & G21-MOV-CC-F014B
G21-MOV-CC_3_5_6	4.08E-06	2.81E-08	1.01	CCF of three components: G21-MOV-CC-F013A & G21-MOV-CC-F014A & G21-MOV-CC-F014B
G21-MOV-CC_3_6	4.12E-06	8.44E-08	1.02	CCF of two components: G21-MOV-CC-F013A & G21-MOV-CC-F014B
G21-MOV-CC_4_5	4.12E-06	8.44E-08	1.02	CCF of two components: G21-MOV-CC-F013B & G21-MOV-CC-F014A
G21-MOV-CC_4_5_6	4.08E-06	2.81E-08	1.01	CCF of three components: G21-MOV-CC-F013B & G21-MOV-CC-F014A & G21-MOV-CC-F014B
G21-MOV-CC_5_6	4.12E-06	8.44E-08	1.02	CCF of two components: G21-MOV-CC-F014A & G21-MOV-CC-F014B
G21-MOV-CC_ALL	1.45E-04	3.04E-05	1.21	CCF of all components in group 'G21-MOV-CC'
G21-MOV-CC-2_1_2	4.44E-04	1.33E-02	30.91	CCF of two components: G21-MOV-CC-F332A & G21-MOV-CC-F332B
G21-MOV-CC-F011A	4.00E-03	1.85E-04	1.05	MOTOR OPER. VALVE F011A FAILS TO OPEN
G21-MOV-CC-F011B	4.00E-03	2.24E-04	1.05	MOTOR OPER. VALVE F011B FAILS TO OPEN

Table 14.6-5

High Wind Shutdown Importance Measure Report

CDF = 3.95E-08

Event Name	Probability	Fus Ves	RAW	Description
G21-MOV-CC-F013A	4.00E-03	1.85E-04	1.05	MOTOR OPER. VALVE F013A FAILS TO OPEN
G21-MOV-CC-F013B	4.00E-03	2.24E-04	1.05	MOTOR OPER. VALVE F013B FAILS TO OPEN
G21-MOV-CC-F014A	4.00E-03	1.85E-04	1.05	MOTOR OPER. VALVE F014A FAILS TO OPEN
G21-MOV-CC-F014B	4.00E-03	2.24E-04	1.05	MOTOR OPER. VALVE F014B FAILS TO OPEN
G21-MOV-CC-F046B	4.00E-03	2.24E-04	1.05	MOTOR OPERATED VALVE P21-F046B FAILS TO OPEN
G21-MOV-CC-F047B	4.00E-03	2.24E-04	1.05	MOTOR OPERATED VALVE P21-F047B FAILS TO OPEN
G21-MOV-CC-F332A	4.00E-03	6.53E-04	1.16	MOTOR OPERATED VALVE FAILS TO OPEN
G21-MOV-CC-F332B	4.00E-03	6.53E-04	1.16	MOTOR OPERATED VALVE FAILS TO OPEN
G21-MOV-OO-F003A	4.00E-03	1.85E-04	1.05	MOTOR OPERATED VALVE F003A FAILS TO CLOSE
G21-MOV-OO-F008A	4.00E-03	1.85E-04	1.05	MOTOR OPER. VALVE F008A FAILS TO CLOSE
G21-MP_-FR_1_2	3.96E-05	6.53E-06	1.16	CCF of two components: G21-MP_-FR-C001A & G21-MP_-FR-C001B
G21-MP_-FR-C001A	6.00E-04	1.24E-05	1.02	MOTOR-DRIVEN PUMP C001A FAILS TO RUN

Table 14.6-5

High Wind Shutdown Importance Measure Report

CDF = 3.95E-08

Event Name	Probability	Fus Ves	RAW	Description
G21-MP_-FR-C001B	6.00E-04	1.46E-05	1.02	MOTOR-DRIVEN PUMP C001B FAILS TO RUN
G21-MP_-FR-PLP	6.00E-04	1.43E-03	3.36	MOTOR-DRIVEN LPI PUMP FAILS TO RUN
G21-MP_-FS_1_2	3.26E-04	7.26E-05	1.22	CCF of two components: G21-MP_-FS-C001A & G21-MP_-FS-C001B
G21-MP_-FS-C001A	2.00E-03	7.53E-05	1.04	PUMP C001A FAILS TO START
G21-MP_-FS-C001B	2.00E-03	8.93E-05	1.04	MOTOR-DRIVEN PUMP C001B FAILS TO START
G21-MP_-FS-PLP	2.00E-03	5.64E-03	3.8	MOTOR-DRIVEN LPI PUMP FAILS TO START
G21-NMO-CC_ALL	5.00E-06	1.63E-07	1.03	CCF of all components in group 'G21-NMO-CC'
G21-NSC-TM-F332A	1.50E-03	2.43E-04	1.16	MAINTENANCE FOR VALVE F332A
G21-NSC-TM-F332B	1.50E-03	2.43E-04	1.16	MAINTENANCE FOR VALVE F332B
G21-NST-TM-TRAINB	9.00E-03	5.88E-04	1.06	TRAIN B IN MAINTENANCE
G21-PT_-NO_1_2	1.15E-05	1.35E-06	1.11	CCF of two components: G21-PT_-NO-N002A & G21-PT_-NO-N002B
G21-STR-PG-SPPLUG	2.40E-04	5.30E-05	1.22	FILTER/STRAINER IN SP PLUG

Table 14.6-5

High Wind Shutdown Importance Measure Report

CDF = 3.95E-08

Event Name	Probability	Fus Ves	RAW	Description
G21-UV_-CC-A_1_2	2.99E-06	8.75E-05	30.24	CCF of two components: G21-UV_-CC-F333A & G21-UV_-CC-F333B
G21-UV_-CC-F004A	1.00E-04	4.05E-07	1	CHECK VALVE FAILS TO OPEN
G21-UV_-CC-F004B	1.00E-04	4.05E-07	1	CHECK VALVE F004B FAILS TO OPEN
G21-UV_-CC-F333A	1.00E-04	1.07E-07	1	AIR ASSIST CHECK VALVE FAILS TO OPEN
G21-UV_-CC-F333B	1.00E-04	1.07E-07	1	AIR ASSIST CHECK VALVE FAILS TO OPEN
G21-UV_-CC-F347	1.00E-04	1.52E-04	2.49	CHECK VALVE F347 FAILS TO OPEN
G21-UV_-CC-FU438	1.00E-04	1.52E-04	2.49	LPI DISCHARGE CHECK VALVE FAILS TO OPEN
G21-UV_-OO-F331A	1.00E-03	2.59E-03	3.56	CHECK VALVE F331A FAILS TO CLOSE
G21-UV_-OO-F331B	1.00E-03	2.59E-03	3.56	CHECK VALVE F331B FAILS TO CLOSE
G21-XHE-FO-LPCI	1.61E-03	3.83E-04	1.24	OPERATOR FAILS TO ALIGN AND ACTUATE FAPCS IN LPCI MODE
MS-TOP2	5.00E-02	4.04E-01	8.68	TWO DPVs FAIL TO OPEN (MANUAL)
NICWSA-SYS-FAILS	1.00E-03	2.22E-04	1.22	NUCLEAR ISLAND CHILLED WATER SUBSYSTEM TRAIN A FAILS

Table 14.6-5

High Wind Shutdown Importance Measure Report

CDF = 3.95E-08

Event Name	Probability	Fus Ves	RAW	Description
NICWSB-SYS-FAILS	1.00E-03	2.20E-04	1.22	NUCLEAR ISLAND CHILLED WATER SUBSYSTEM TRAIN B FAILS
P21-ACV-CC-F0023_1_2	1.93E-04	2.76E-04	2.42	CCF of two components: P21-ACV-CC-F0023A & P21-ACV-CC-F0023B
P21-ACV-CC-F0023A	2.00E-03	5.39E-04	1.27	AIR OPERATED VALVE F0023A FAILS TO OPEN
P21-ACV-CC-F0023B	2.00E-03	5.34E-04	1.26	AIR OPERATED VALVE F0023B FAILS TO OPEN
P21-ACV-CO-F0004	7.20E-07	1.24E-07	1.16	AIR OPERATED VALVE F0004 FAILS TO REMAIN CLOSED
P21-ACV-CO-F0027	7.20E-07	1.24E-07	1.16	AIR OPERATED VALVE F0027 FAILS TO REMAIN CLOSED
P21-ACV-CO-F0061	7.20E-07	1.24E-07	1.16	AIR OPERATED VALVE F0061 FAILS TO REMAIN CLOSED
P21-ACV-OC-F0023A	2.40E-05	7.60E-07	1.03	AIR OPERATED VALVE F0023A FAILS TO REMAIN OPEN
P21-ACV-OC-F0023B	2.40E-05	7.60E-07	1.03	AIR OPERATED VALVE F0023B FAILS TO REMAIN OPEN
P21-ACV-OC-F012A	2.40E-05	7.60E-07	1.03	AIR OPERATED VALVE F012A FAILS TO REMAIN OPEN
P21-ACV-OC-F012B	2.40E-05	7.60E-07	1.03	AIR OPERATED VALVE F012B FAILS TO REMAIN OPEN
P21-ACV-OO-CCF23_1_2	2.22E-04	3.22E-04	2.44	CCF of two components: P21-ACV-OO-F023A & P21-ACV-OO-F023B

Table 14.6-5

High Wind Shutdown Importance Measure Report

CDF = 3.95E-08

Event Name	Probability	Fus Ves	RAW	Description
P21-ACV-OO-F0004	2.00E-03	3.12E-03	2.55	AIR OPERATED VALVE F0004 FAILS TO CLOSE
P21-ACV-OO-F0016_1_2	1.93E-04	2.76E-04	2.42	CCF of two components: P21-ACV-OO-F016A & P21-ACV-OO-F016B
P21-ACV-OO-F0027	2.00E-03	3.12E-03	2.55	AIR OPERATED VALVE F0027 FAILS TO CLOSE
P21-ACV-OO-F0061	2.00E-03	3.12E-03	2.55	AIR OPERATED VALVE F0061 FAILS TO CLOSE
P21-ACV-OO-F016A	2.00E-03	5.39E-04	1.27	AIR OPERATED VALVE F016A FAILS TO CLOSE
P21-ACV-OO-F016B	2.00E-03	5.34E-04	1.26	AIR OPERATED VALVE F016B FAILS TO CLOSE
P21-ACV-OO-F023A	2.00E-03	5.39E-04	1.27	AIR OPERATED VALVE FAILS TO CLOSE
P21-ACV-OO-F023B	2.00E-03	5.34E-04	1.26	AIR OPERATED VALVE FAILS TO CLOSE
P21-ACV-OO-XTIE_1_2	5.92E-06	3.89E-06	1.64	CCF of two components: P21-ACV-OO-F0004 & P21-ACV-OO-F0027
P21-ACV-OO-XTIE_1_2_3	1.57E-04	2.22E-04	2.4	CCF of three components: P21-ACV-OO-F0004 & P21-ACV-OO-F0027 & P21-ACV-OO-F0061
P21-ACV-OO-XTIE_1_3	5.92E-06	3.89E-06	1.64	CCF of two components: P21-ACV-OO-F0004 & P21-ACV-OO-F0061
P21-ACV-OO-XTIE_2_3	5.92E-06	3.89E-06	1.64	CCF of two components: P21-ACV-OO-F0027 & P21-ACV-OO-F0061

Table 14.6-5

High Wind Shutdown Importance Measure Report

CDF = 3.95E-08

Event Name	Probability	Fus Ves	RAW	Description
P21-AHU-FR_1_2	1.26E-05	1.17E-05	1.91	CCF of two components: P21-AHU-FR-RCCWA & P21-AHU-FR-RCCWB
P21-AHU-FR-RCCWA	2.40E-04	3.19E-05	1.13	AIR HANDLING UNIT RCCWS ROOM A FAILS TO RUN
P21-AHU-FR-RCCWB	2.40E-04	3.19E-05	1.13	AIR HANDLING UNIT RCCWS ROOM TRAIN B FAILS TO RUN
P21-AHU-FS_1_2	6.67E-04	1.01E-03	2.51	CCF of two components: P21-AHU-FS-RCCWA & P21-AHU-FS-RCCWB
P21-AHU-FS-RCCWA	6.00E-03	1.97E-03	1.32	AIR HANDLING UNIT RCCWS ROOM A FAILS TO START
P21-AHU-FS-RCCWB	6.00E-03	1.94E-03	1.32	AIR HANDLING UNIT RCCWS ROOM B FAILS TO START
P21-HX_-LK-B001A	2.40E-05	7.60E-07	1.03	HEAT EXCHANGER B001A FAILS WHILE OPERATING
P21-HX_-LK-B001B	2.40E-05	7.60E-07	1.03	HEAT EXCHANGER B001B FAILS WHILE OPERATING
P21-HX_-LK-B002A	2.40E-05	7.60E-07	1.03	HEAT EXCHANGER FAILURE (LEAK OR RUPTURE)
P21-HX_-LK-B002B	2.40E-05	7.60E-07	1.03	HEAT EXCHANGER B002B FAILS WHILE OPERATING
P21-HX_-LK-B003A	2.40E-05	7.60E-07	1.03	HEAT EXCHANGER (LEAK OR RUPTURE)
P21-HX_-LK-B003B	2.40E-05	7.60E-07	1.03	HEAT EXCHANGER B003B FAILS WHILE OPERATING

Table 14.6-5

High Wind Shutdown Importance Measure Report

CDF = 3.95E-08

Event Name	Probability	Fus Ves	RAW	Description
P21-MOV-CC_1_2_4	4.17E-06	2.14E-06	1.5	CCF of three components: P21-MOV-CC-F0010A1 & P21-MOV-CC-F0010A2 & P21-MOV-CC-F0
P21-MOV-CC_1_2_5	4.17E-06	2.14E-06	1.5	CCF of three components: P21-MOV-CC-F0010A1 & P21-MOV-CC-F0010A2 & P21-MOV-CC-F0
P21-MOV-CC_1_2_6	4.17E-06	2.14E-06	1.5	CCF of three components: P21-MOV-CC-F0010A1 & P21-MOV-CC-F0010A2 & P21-MOV-CC-F0
P21-MOV-CC_1_3_4	4.17E-06	2.14E-06	1.5	CCF of three components: P21-MOV-CC-F0010A1 & P21-MOV-CC-F0010A3 & P21-MOV-CC-F0
P21-MOV-CC_1_3_5	4.17E-06	2.14E-06	1.5	CCF of three components: P21-MOV-CC-F0010A1 & P21-MOV-CC-F0010A3 & P21-MOV-CC-F0
P21-MOV-CC_1_3_6	4.17E-06	2.14E-06	1.5	CCF of three components: P21-MOV-CC-F0010A1 & P21-MOV-CC-F0010A3 & P21-MOV-CC-F0
P21-MOV-CC_1_4	4.21E-06	2.17E-06	1.51	CCF of two components: P21-MOV-CC-F0010A1 & P21-MOV-CC-F0010B1
P21-MOV-CC_1_4_5	4.17E-06	2.14E-06	1.5	CCF of three components: P21-MOV-CC-F0010A1 & P21-MOV-CC-F0010B1 & P21-MOV-CC-F0
P21-MOV-CC_1_4_6	4.17E-06	2.14E-06	1.5	CCF of three components: P21-MOV-CC-F0010A1 & P21-MOV-CC-F0010B1 & P21-MOV-CC-F0
P21-MOV-CC_1_5	4.21E-06	2.17E-06	1.51	CCF of two components: P21-MOV-CC-F0010A1 & P21-MOV-CC-F0010B2
P21-MOV-CC_1_5_6	4.17E-06	2.14E-06	1.5	CCF of three components: P21-MOV-CC-F0010A1 & P21-MOV-CC-F0010B2 & P21-MOV-CC-F0
P21-MOV-CC_1_6	4.21E-06	2.17E-06	1.51	CCF of two components: P21-MOV-CC-F0010A1 & P21-MOV-CC-F0010B3

Table 14.6-5

High Wind Shutdown Importance Measure Report

CDF = 3.95E-08

Event Name	Probability	Fus Ves	RAW	Description
P21-MOV-CC_2_3_4	4.17E-06	2.14E-06	1.5	CCF of three components: P21-MOV-CC-F0010A2 & P21-MOV-CC-F0010A3 & P21-MOV-CC-F0
P21-MOV-CC_2_3_5	4.17E-06	2.14E-06	1.5	CCF of three components: P21-MOV-CC-F0010A2 & P21-MOV-CC-F0010A3 & P21-MOV-CC-F0
P21-MOV-CC_2_3_6	4.17E-06	2.14E-06	1.5	CCF of three components: P21-MOV-CC-F0010A2 & P21-MOV-CC-F0010A3 & P21-MOV-CC-F0
P21-MOV-CC_2_4	4.21E-06	2.17E-06	1.51	CCF of two components: P21-MOV-CC-F0010A2 & P21-MOV-CC-F0010B1
P21-MOV-CC_2_4_5	4.17E-06	2.14E-06	1.5	CCF of three components: P21-MOV-CC-F0010A2 & P21-MOV-CC-F0010B1 & P21-MOV-CC-F0
P21-MOV-CC_2_4_6	4.17E-06	2.14E-06	1.5	CCF of three components: P21-MOV-CC-F0010A2 & P21-MOV-CC-F0010B1 & P21-MOV-CC-F0
P21-MOV-CC_2_5	4.21E-06	2.17E-06	1.51	CCF of two components: P21-MOV-CC-F0010A2 & P21-MOV-CC-F0010B2
P21-MOV-CC_2_5_6	4.17E-06	2.14E-06	1.5	CCF of three components: P21-MOV-CC-F0010A2 & P21-MOV-CC-F0010B2 & P21-MOV-CC-F0
P21-MOV-CC_2_6	4.21E-06	2.17E-06	1.51	CCF of two components: P21-MOV-CC-F0010A2 & P21-MOV-CC-F0010B3
P21-MOV-CC_3_4	4.21E-06	2.17E-06	1.51	CCF of two components: P21-MOV-CC-F0010A3 & P21-MOV-CC-F0010B1
P21-MOV-CC_3_4_5	4.17E-06	2.14E-06	1.5	CCF of three components: P21-MOV-CC-F0010A3 & P21-MOV-CC-F0010B1 & P21-MOV-CC-F0
P21-MOV-CC_3_4_6	4.17E-06	2.14E-06	1.5	CCF of three components: P21-MOV-CC-F0010A3 & P21-MOV-CC-F0010B1 & P21-MOV-CC-F0

Table 14.6-5

High Wind Shutdown Importance Measure Report

CDF = 3.95E-08

Event Name	Probability	Fus Ves	RAW	Description
P21-MOV-CC_3_5	4.21E-06	2.17E-06	1.51	CCF of two components: P21-MOV-CC-F0010A3 & P21-MOV-CC-F0010B2
P21-MOV-CC_3_5_6	4.17E-06	2.14E-06	1.5	CCF of three components: P21-MOV-CC-F0010A3 & P21-MOV-CC-F0010B2 & P21-MOV-CC-F0
P21-MOV-CC_3_6	4.21E-06	2.17E-06	1.51	CCF of two components: P21-MOV-CC-F0010A3 & P21-MOV-CC-F0010B3
P21-MOV-CC_ALL	1.48E-04	2.07E-04	2.39	CCF of all components in group 'P21-MOV-CC'
P21-MOV-CC-F0010A1	4.00E-03	1.24E-03	1.3	MOTOR OPERATED VALVE F0010A1 FAILS TO OPEN
P21-MOV-CC-F0010A2	4.00E-03	1.24E-03	1.3	MOTOR OPERATED VALVE F0010A2 FAILS TO OPEN
P21-MOV-CC-F0010A3	4.00E-03	1.24E-03	1.3	MOTOR OPERATED VALVE F0010A3 FAILS TO OPEN
P21-MOV-CC-F0010B1	4.00E-03	1.22E-03	1.3	MOTOR OPERATED VALVE F0010B1 FAILS TO OPEN
P21-MOV-CC-F0010B2	4.00E-03	1.22E-03	1.3	MOTOR OPERATED VALVE F0010B2 FAILS TO OPEN
P21-MOV-CC-F0010B3	4.00E-03	1.22E-03	1.3	MOTOR OPERATED VALVE F0010B3 FAILS TO OPEN
P21-MP_-FR_1_2	1.15E-06	3.26E-07	1.28	CCF of two components: P21-MPC-FR-C001A & P21-MPC-FR-C001B
P21-MP_-FR_1_2_3	5.97E-07	1.01E-07	1.16	CCF of three components: P21-MPC-FR-C001A & P21-MPC-FR-C001B & P21-MPC-FR-C002A

Table 14.6-5

High Wind Shutdown Importance Measure Report

CDF = 3.95E-08

Event Name	Probability	Fus Ves	RAW	Description
P21-MP_-FR_1_2_4	5.97E-07	1.01E-07	1.16	CCF of three components: P21-MPC-FR-C001A & P21-MPC-FR-C001B & P21-MPC-FR-C002B
P21-MP_-FR_1_2_5	5.97E-07	1.01E-07	1.16	CCF of three components: P21-MPC-FR-C001A & P21-MPC-FR-C001B & P21-MPC-FR-C003A
P21-MP_-FR_1_2_6	5.97E-07	1.01E-07	1.16	CCF of three components: P21-MPC-FR-C001A & P21-MPC-FR-C001B & P21-MPC-FR-C003B
P21-MP_-FR_1_3_4	5.97E-07	1.01E-07	1.16	CCF of three components: P21-MPC-FR-C001A & P21-MPC-FR-C002A & P21-MPC-FR-C002B
P21-MP_-FR_1_3_6	5.97E-07	1.01E-07	1.16	CCF of three components: P21-MPC-FR-C001A & P21-MPC-FR-C002A & P21-MPC-FR-C003B
P21-MP_-FR_1_4	1.15E-06	3.26E-07	1.28	CCF of two components: P21-MPC-FR-C001A & P21-MPC-FR-C002B
P21-MP_-FR_1_4_5	5.97E-07	1.01E-07	1.16	CCF of three components: P21-MPC-FR-C001A & P21-MPC-FR-C002B & P21-MPC-FR-C003A
P21-MP_-FR_1_4_6	5.97E-07	1.01E-07	1.16	CCF of three components: P21-MPC-FR-C001A & P21-MPC-FR-C002B & P21-MPC-FR-C003B
P21-MP_-FR_1_5_6	5.97E-07	1.01E-07	1.16	CCF of three components: P21-MPC-FR-C001A & P21-MPC-FR-C003A & P21-MPC-FR-C003B
P21-MP_-FR_1_6	1.15E-06	3.26E-07	1.28	CCF of two components: P21-MPC-FR-C001A & P21-MPC-FR-C003B
P21-MP_-FR_2_3	1.15E-06	3.26E-07	1.28	CCF of two components: P21-MPC-FR-C001B & P21-MPC-FR-C002A
P21-MP_-FR_2_3_4	5.97E-07	1.01E-07	1.16	CCF of three components: P21-MPC-FR-C001B & P21-MPC-FR-C002A & P21-MPC-FR-C002B

Table 14.6-5

High Wind Shutdown Importance Measure Report

CDF = 3.95E-08

Event Name	Probability	Fus Ves	RAW	Description
P21-MP_-FR_2_3_5	5.97E-07	1.01E-07	1.16	CCF of three components: P21-MPC-FR-C001B & P21-MPC-FR-C002A & P21-MPC-FR-C003A
P21-MP_-FR_2_3_6	5.97E-07	1.01E-07	1.16	CCF of three components: P21-MPC-FR-C001B & P21-MPC-FR-C002A & P21-MPC-FR-C003B
P21-MP_-FR_2_4_5	5.97E-07	1.01E-07	1.16	CCF of three components: P21-MPC-FR-C001B & P21-MPC-FR-C002B & P21-MPC-FR-C003A
P21-MP_-FR_2_5	1.15E-06	3.26E-07	1.28	CCF of two components: P21-MPC-FR-C001B & P21-MPC-FR-C003A
P21-MP_-FR_2_5_6	5.97E-07	1.01E-07	1.16	CCF of three components: P21-MPC-FR-C001B & P21-MPC-FR-C003A & P21-MPC-FR-C003B
P21-MP_-FR_3_4	1.15E-06	3.26E-07	1.28	CCF of two components: P21-MPC-FR-C002A & P21-MPC-FR-C002B
P21-MP_-FR_3_4_5	5.97E-07	1.01E-07	1.16	CCF of three components: P21-MPC-FR-C002A & P21-MPC-FR-C002B & P21-MPC-FR-C003A
P21-MP_-FR_3_4_6	5.97E-07	1.01E-07	1.16	CCF of three components: P21-MPC-FR-C002A & P21-MPC-FR-C002B & P21-MPC-FR-C003B
P21-MP_-FR_3_5_6	5.97E-07	1.01E-07	1.16	CCF of three components: P21-MPC-FR-C002A & P21-MPC-FR-C003A & P21-MPC-FR-C003B
P21-MP_-FR_3_6	1.15E-06	3.26E-07	1.28	CCF of two components: P21-MPC-FR-C002A & P21-MPC-FR-C003B
P21-MP_-FR_4_5	1.15E-06	3.26E-07	1.28	CCF of two components: P21-MPC-FR-C002B & P21-MPC-FR-C003A
P21-MP_-FR_4_5_6	5.97E-07	1.01E-07	1.16	CCF of three components: P21-MPC-FR-C002B & P21-MPC-FR-C003A & P21-MPC-FR-C003B

Table 14.6-5

High Wind Shutdown Importance Measure Report

CDF = 3.95E-08

Event Name	Probability	Fus Ves	RAW	Description
P21-MP_-FR_5_6	1.15E-06	3.26E-07	1.28	CCF of two components: P21-MPC-FR-C003A & P21-MPC-FR-C003B
P21-MP_-FR_ALL	1.33E-05	1.28E-05	1.94	CCF of all components in group 'P21-MP_-FR'
P21-MP_-FS_1_2	1.06E-06	3.21E-07	1.28	CCF of two components: P21-MPC-FS-C001A & P21-MPC-FS-C001B
P21-MP_-FS_1_2_3	1.54E-06	5.06E-07	1.32	CCF of three components: P21-MPC-FS-C001A & P21-MPC-FS-C001B & P21-MPC-FS-C002A
P21-MP_-FS_1_2_4	1.54E-06	5.06E-07	1.32	CCF of three components: P21-MPC-FS-C001A & P21-MPC-FS-C001B & P21-MPC-FS-C002B
P21-MP_-FS_1_2_5	1.54E-06	5.06E-07	1.32	CCF of three components: P21-MPC-FS-C001A & P21-MPC-FS-C001B & P21-MPC-FS-C003A
P21-MP_-FS_1_2_6	1.54E-06	5.06E-07	1.32	CCF of three components: P21-MPC-FS-C001A & P21-MPC-FS-C001B & P21-MPC-FS-C003B
P21-MP_-FS_1_3_4	1.54E-06	5.06E-07	1.32	CCF of three components: P21-MPC-FS-C001A & P21-MPC-FS-C002A & P21-MPC-FS-C002B
P21-MP_-FS_1_3_6	1.54E-06	5.06E-07	1.32	CCF of three components: P21-MPC-FS-C001A & P21-MPC-FS-C002A & P21-MPC-FS-C003B
P21-MP_-FS_1_4	1.06E-06	3.21E-07	1.28	CCF of two components: P21-MPC-FS-C001A & P21-MPC-FS-C002B
P21-MP_-FS_1_4_5	1.54E-06	5.06E-07	1.32	CCF of three components: P21-MPC-FS-C001A & P21-MPC-FS-C002B & P21-MPC-FS-C003A
P21-MP_-FS_1_4_6	1.54E-06	5.06E-07	1.32	CCF of three components: P21-MPC-FS-C001A & P21-MPC-FS-C002B & P21-MPC-FS-C003B

Table 14.6-5

High Wind Shutdown Importance Measure Report

CDF = 3.95E-08

Event Name	Probability	Fus Ves	RAW	Description
P21-MP_-FS_1_5_6	1.54E-06	5.06E-07	1.32	CCF of three components: P21-MPC-FS-C001A & P21-MPC-FS-C003A & P21-MPC-FS-C003B
P21-MP_-FS_1_6	1.06E-06	3.21E-07	1.28	CCF of two components: P21-MPC-FS-C001A & P21-MPC-FS-C003B
P21-MP_-FS_2_3	1.06E-06	3.21E-07	1.28	CCF of two components: P21-MPC-FS-C001B & P21-MPC-FS-C002A
P21-MP_-FS_2_3_4	1.54E-06	5.06E-07	1.32	CCF of three components: P21-MPC-FS-C001B & P21-MPC-FS-C002A & P21-MPC-FS-C002B
P21-MP_-FS_2_3_5	1.54E-06	5.06E-07	1.32	CCF of three components: P21-MPC-FS-C001B & P21-MPC-FS-C002A & P21-MPC-FS-C003A
P21-MP_-FS_2_3_6	1.54E-06	5.06E-07	1.32	CCF of three components: P21-MPC-FS-C001B & P21-MPC-FS-C002A & P21-MPC-FS-C003B
P21-MP_-FS_2_4_5	1.54E-06	5.06E-07	1.32	CCF of three components: P21-MPC-FS-C001B & P21-MPC-FS-C002B & P21-MPC-FS-C003A
P21-MP_-FS_2_5	1.06E-06	3.21E-07	1.28	CCF of two components: P21-MPC-FS-C001B & P21-MPC-FS-C003A
P21-MP_-FS_2_5_6	1.54E-06	5.06E-07	1.32	CCF of three components: P21-MPC-FS-C001B & P21-MPC-FS-C003A & P21-MPC-FS-C003B
P21-MP_-FS_3_4	1.06E-06	3.21E-07	1.28	CCF of two components: P21-MPC-FS-C002A & P21-MPC-FS-C002B
P21-MP_-FS_3_4_5	1.54E-06	5.06E-07	1.32	CCF of three components: P21-MPC-FS-C002A & P21-MPC-FS-C002B & P21-MPC-FS-C003A
P21-MP_-FS_3_4_6	1.54E-06	5.06E-07	1.32	CCF of three components: P21-MPC-FS-C002A & P21-MPC-FS-C002B & P21-MPC-FS-C003B

Table 14.6-5

High Wind Shutdown Importance Measure Report

CDF = 3.95E-08

Event Name	Probability	Fus Ves	RAW	Description
P21-MP_-FS_3_5_6	1.54E-06	5.06E-07	1.32	CCF of three components: P21-MPC-FS-C002A & P21-MPC-FS-C003A & P21-MPC-FS-C003B
P21-MP_-FS_3_6	1.06E-06	3.21E-07	1.28	CCF of two components: P21-MPC-FS-C002A & P21-MPC-FS-C003B
P21-MP_-FS_4_5	1.06E-06	3.21E-07	1.28	CCF of two components: P21-MPC-FS-C002B & P21-MPC-FS-C003A
P21-MP_-FS_4_5_6	1.54E-06	5.06E-07	1.32	CCF of three components: P21-MPC-FS-C002B & P21-MPC-FS-C003A & P21-MPC-FS-C003B
P21-MP_-FS_5_6	1.06E-06	3.21E-07	1.28	CCF of two components: P21-MPC-FS-C003A & P21-MPC-FS-C003B
P21-MP_-FS_ALL	1.56E-04	2.19E-04	2.4	CCF of all components in group 'P21-MP_-FS'
P21-MPC-FR-C001A	6.00E-04	1.13E-04	1.19	MOTOR DRIVEN PUMP C001A FAILS TO RUN
P21-MPC-FR-C001B	6.00E-04	1.13E-04	1.19	MOTOR DRIVEN PUMP C001B FAILS TO RUN
P21-MPC-FR-C002A	6.00E-04	1.13E-04	1.19	MOTOR-DRIVEN PUMP C002A FAILS TO RUN
P21-MPC-FR-C002B	6.00E-04	1.13E-04	1.19	MOTOR-DRIVEN PUMP C002B FAILS TO RUN
P21-MPC-FR-C003A	6.00E-04	1.13E-04	1.19	MOTOR-DRIVEN PUMP C0003A FAILS TO RUN
P21-MPC-FR-C003B	6.00E-04	1.13E-04	1.19	MOTOR-DRIVEN PUMP C003B FAILS TO RUN

Table 14.6-5

High Wind Shutdown Importance Measure Report

CDF = 3.95E-08

Event Name	Probability	Fus Ves	RAW	Description
P21-MPC-FS-C001A	2.00E-03	5.39E-04	1.27	MOTOR DRIVEN PUMP C001A FAILS TO START
P21-MPC-FS-C001B	2.00E-03	5.34E-04	1.26	MOTOR-DRIVEN PUMP C001B FAILS TO START
P21-MPC-FS-C002A	2.00E-03	5.39E-04	1.27	MOTOR-DRIVEN PUMP C002A FAILS TO START
P21-MPC-FS-C002B	2.00E-03	5.34E-04	1.26	MOTOR-DRIVEN PUMP C002B FAILS TO START
P21-MPC-FS-C003A	2.00E-03	5.39E-04	1.27	MOTOR-DRIVEN PUMP C0003A FAILS TO START
P21-MPC-FS-C003B	2.00E-03	5.34E-04	1.26	MOTOR-DRIVEN PUMP C003B FAILS TO START
P21-NSC-TM-B001A	1.50E-03	3.75E-04	1.25	HEAT EXCHANGER B001A UNAVAILABLE DUE TO MAINTENANCE
P21-NSC-TM-B001B	1.50E-03	3.72E-04	1.24	HEAT EXCHANGER B001B UNAVAILABLE DUE TO MAINTENANCE
P21-NSC-TM-B002A	1.50E-03	3.75E-04	1.25	HEAT EXCHANGER B002A UNAVAILABLE DUE TO MAINTENANCE
P21-NSC-TM-B002B	1.50E-03	3.72E-04	1.24	HEAT EXCHANGER B002B UNAVAILABLE DUE TO MAINTENANCE
P21-NSC-TM-B003A	1.50E-03	3.75E-04	1.25	HEAT EXCHANGER B003A UNAVAILABLE DUE TO MAINTENANCE
P21-NSC-TM-B003B	1.50E-03	3.72E-04	1.24	HEAT EXCHANGER B003B UNAVAILABLE DUE TO MAINTENANCE

Table 14.6-5

High Wind Shutdown Importance Measure Report

CDF = 3.95E-08

Event Name	Probability	Fus Ves	RAW	Description
P21-NSC-TM-C001A	1.50E-03	3.75E-04	1.25	PUMP C001A IN MAINTENANCE
P21-NSC-TM-C001B	1.50E-03	3.72E-04	1.24	PUMP C001B IN MAINTENANCE
P21-NSC-TM-C002A	1.50E-03	3.75E-04	1.25	PUMP C002A IN MAINTENANCE
P21-NSC-TM-C002B	1.50E-03	3.72E-04	1.24	PUMP C002B IN MAINTENANCE
P21-NSC-TM-C003A	1.50E-03	3.75E-04	1.25	PUMP C003A IN MAINTENANCE
P21-NSC-TM-C003B	1.50E-03	3.72E-04	1.24	PUMP C003B IN MAINTENANCE
P21-NSC-TM-TRAINAHX	7.50E-05	4.91E-06	1.06	RCCW HXS IN TEST OR MAINTENANCE TRAIN A
P21-NSC-TM-TRAINAPUMP	7.50E-05	4.91E-06	1.06	RCCW PUMPS IN TEST OR MAINTENANCE TRAIN A
P21-NSC-TM-TRAINBHX	7.50E-05	4.91E-06	1.06	RCCW HXS IN TEST OR MAINTENANCE TRAIN B
P21-NSC-TM-TRAINBPUMP	7.50E-05	4.91E-06	1.06	RCCW PUMPS IN TEST OR MAINTENANCE TRAIN B
P21-TRN-RE-HX1A	8.07E-03	2.74E-03	1.33	FAILURE TO RESTORE RCCW TRAIN 1A HX
P21-TRN-RE-HX1B	8.07E-03	2.70E-03	1.33	FAILURE TO RESTORE RCCW TRAIN 1B HX

Table 14.6-5

High Wind Shutdown Importance Measure Report

CDF = 3.95E-08

Event Name	Probability	Fus Ves	RAW	Description
P21-TRN-RE-HX2A	8.07E-03	2.74E-03	1.33	FAILURE TO RESTORE RCCW TRAIN 2A HX
P21-TRN-RE-HX2B	8.07E-03	2.70E-03	1.33	FAILURE TO RESTORE RCCW TRAIN 2B HX
P21-TRN-RE-HX3A	8.07E-03	2.74E-03	1.33	FAILURE TO RESTORE RCCW TRAIN 3A HX
P21-TRN-RE-HX3B	8.07E-03	2.70E-03	1.33	FAILURE TO RESTORE RCCW TRAIN 3B HX
P21-TRN-RE-PUMP1A	8.07E-03	2.74E-03	1.33	FAILURE TO RESTORE RCCW TRAIN 1A PUMP
P21-TRN-RE-PUMP1B	8.07E-03	2.70E-03	1.33	FAILURE TO RESTORE RCCW TRAIN 1B PUMP
P21-TRN-RE-PUMP2A	8.07E-03	2.74E-03	1.33	FAILURE TO RESTORE RCCW TRAIN 2A PUMP
P21-TRN-RE-PUMP2B	8.07E-03	2.70E-03	1.33	FAILURE TO RESTORE RCCW TRAIN 2B PUMP
P21-TRN-RE-PUMP3A	8.07E-03	2.74E-03	1.33	FAILURE TO RESTORE RCCW TRAIN 3A PUMP
P21-TRN-RE-PUMP3B	8.07E-03	2.70E-03	1.33	FAILURE TO RESTORE RCCW TRAIN 3B PUMP
P21-UV_-CC_ALL	1.72E-06	5.63E-07	1.32	CCF of all components in group 'P21-UV_-CC'
P21-UV_-CC-0001A1	1.00E-04	8.20E-06	1.08	CHECK VALVE 0001A1 FAILS TO OPEN

Table 14.6-5

High Wind Shutdown Importance Measure Report

CDF = 3.95E-08

Event Name	Probability	Fus Ves	RAW	Description
P21-UV_-CC-0001A2	1.00E-04	8.20E-06	1.08	CHECK VALVE 0001A2 FAILS TO OPEN
P21-UV_-CC-0001A3	1.00E-04	8.20E-06	1.08	CHECK VALVE 0001A3 FAILS TO OPEN
P21-UV_-CC-0001B1	1.00E-04	8.20E-06	1.08	CHECK VALVE 0001B1 FAILS TO OPEN
P21-UV_-CC-0001B2	1.00E-04	8.20E-06	1.08	CHECK VALVE 0001B2 FAILS TO OPEN
P21-UV_-CC-0001B3	1.00E-04	8.20E-06	1.08	CHECK VALVE 0001B3 FAILS TO OPEN
P41-ACV-CC_1_2	2.37E-06	7.93E-07	1.33	CCF of two components: P41-ACV-CC-F004A & P41-ACV-CC-F004B
P41-ACV-CC_1_2_3	3.62E-06	1.67E-06	1.45	CCF of three components: P41-ACV-CC-F004A & P41-ACV-CC-F004B & P41-ACV-CC-F006A
P41-ACV-CC_1_2_4	3.62E-06	1.67E-06	1.45	CCF of three components: P41-ACV-CC-F004A & P41-ACV-CC-F004B & P41-ACV-CC-F006B
P41-ACV-CC_1_2_5	3.62E-06	1.67E-06	1.45	CCF of three components: P41-ACV-CC-F004A & P41-ACV-CC-F004B & P41-ACV-CC-F009A
P41-ACV-CC_1_2_6	3.62E-06	1.67E-06	1.45	CCF of three components: P41-ACV-CC-F004A & P41-ACV-CC-F004B & P41-ACV-CC-F009B
P41-ACV-CC_1_3_4	3.62E-06	1.67E-06	1.45	CCF of three components: P41-ACV-CC-F004A & P41-ACV-CC-F006A & P41-ACV-CC-F006B
P41-ACV-CC_1_3_6	3.62E-06	1.67E-06	1.45	CCF of three components: P41-ACV-CC-F004A & P41-ACV-CC-F006A & P41-ACV-CC-F009B

Table 14.6-5

High Wind Shutdown Importance Measure Report

CDF = 3.95E-08

Event Name	Probability	Fus Ves	RAW	Description
P41-ACV-CC_1_4	2.37E-06	7.93E-07	1.33	CCF of two components: P41-ACV-CC-F004A & P41-ACV-CC-F006B
P41-ACV-CC_1_4_5	3.62E-06	1.67E-06	1.45	CCF of three components: P41-ACV-CC-F004A & P41-ACV-CC-F006B & P41-ACV-CC-F009A
P41-ACV-CC_1_4_6	3.62E-06	1.67E-06	1.45	CCF of three components: P41-ACV-CC-F004A & P41-ACV-CC-F006B & P41-ACV-CC-F009B
P41-ACV-CC_1_5_6	3.62E-06	1.67E-06	1.45	CCF of three components: P41-ACV-CC-F004A & P41-ACV-CC-F009A & P41-ACV-CC-F009B
P41-ACV-CC_1_6	2.37E-06	7.93E-07	1.33	CCF of two components: P41-ACV-CC-F004A & P41-ACV-CC-F009B
P41-ACV-CC_2_3	2.37E-06	7.93E-07	1.33	CCF of two components: P41-ACV-CC-F004B & P41-ACV-CC-F006A
P41-ACV-CC_2_3_4	3.62E-06	1.67E-06	1.45	CCF of three components: P41-ACV-CC-F004B & P41-ACV-CC-F006A & P41-ACV-CC-F006B
P41-ACV-CC_2_3_5	3.62E-06	1.67E-06	1.45	CCF of three components: P41-ACV-CC-F004B & P41-ACV-CC-F006A & P41-ACV-CC-F009A
P41-ACV-CC_2_3_6	3.62E-06	1.67E-06	1.45	CCF of three components: P41-ACV-CC-F004B & P41-ACV-CC-F006A & P41-ACV-CC-F009B
P41-ACV-CC_2_4_5	3.62E-06	1.67E-06	1.45	CCF of three components: P41-ACV-CC-F004B & P41-ACV-CC-F006B & P41-ACV-CC-F009A
P41-ACV-CC_2_5	2.37E-06	7.93E-07	1.33	CCF of two components: P41-ACV-CC-F004B & P41-ACV-CC-F009A
P41-ACV-CC_2_5_6	3.62E-06	1.67E-06	1.45	CCF of three components: P41-ACV-CC-F004B & P41-ACV-CC-F009A & P41-ACV-CC-F009B

Table 14.6-5

High Wind Shutdown Importance Measure Report

CDF = 3.95E-08

Event Name	Probability	Fus Ves	RAW	Description
P41-ACV-CC_3_4	2.37E-06	7.93E-07	1.33	CCF of two components: P41-ACV-CC-F006A & P41-ACV-CC-F006B
P41-ACV-CC_3_4_5	3.62E-06	1.67E-06	1.45	CCF of three components: P41-ACV-CC-F006A & P41-ACV-CC-F006B & P41-ACV-CC-F009A
P41-ACV-CC_3_4_6	3.62E-06	1.67E-06	1.45	CCF of three components: P41-ACV-CC-F006A & P41-ACV-CC-F006B & P41-ACV-CC-F009B
P41-ACV-CC_3_5_6	3.62E-06	1.67E-06	1.45	CCF of three components: P41-ACV-CC-F006A & P41-ACV-CC-F009A & P41-ACV-CC-F009B
P41-ACV-CC_3_6	2.37E-06	7.93E-07	1.33	CCF of two components: P41-ACV-CC-F006A & P41-ACV-CC-F009B
P41-ACV-CC_4_5	2.37E-06	7.93E-07	1.33	CCF of two components: P41-ACV-CC-F006B & P41-ACV-CC-F009A
P41-ACV-CC_4_5_6	3.62E-06	1.67E-06	1.45	CCF of three components: P41-ACV-CC-F006B & P41-ACV-CC-F009A & P41-ACV-CC-F009B
P41-ACV-CC_5_6	2.37E-06	7.93E-07	1.33	CCF of two components: P41-ACV-CC-F009A & P41-ACV-CC-F009B
P41-ACV-CC_ALL	1.21E-04	1.67E-04	2.37	CCF of all components in group 'P41-ACV-CC'
P41-ACV-CC-F004A	2.00E-03	5.39E-04	1.27	AIR OPERATED VALVE F004A FAILS TO OPEN
P41-ACV-CC-F004B	2.00E-03	5.34E-04	1.26	AIR OPERATED VALVE F004B FAILS TO OPEN
P41-ACV-CC-F006A	2.00E-03	5.39E-04	1.27	AIR OPERATED VALVE F006A FAILS TO OPEN

Table 14.6-5

High Wind Shutdown Importance Measure Report

CDF = 3.95E-08

Event Name	Probability	Fus Ves	RAW	Description
P41-ACV-CC-F006B	2.00E-03	5.34E-04	1.26	AIR OPERATED VALVE F006B FAILS TO OPEN
P41-ACV-CC-F009A	2.00E-03	5.39E-04	1.27	AIR OPERATED VALVE F009A FAILS TO OPEN
P41-ACV-CC-F009B	2.00E-03	5.34E-04	1.26	AIR OPERATED VALVE F009B FAILS TO OPEN
P41-ACV-OC-F002A	2.40E-05	7.60E-07	1.03	AIR OPERATED VALVE MV-F002A FAIL TO REMAIN OPEN
P41-ACV-OC-F002B	2.40E-05	7.60E-07	1.03	AIR OPERATED VALVE MV-F002B FAILS TO REMAIN OPEN
P41-ACV-OC-F004A	2.40E-05	7.60E-07	1.03	AIR OPERATED VALVE MV-F004A FAIL TO REMAIN OPEN
P41-ACV-OC-F004B	2.40E-05	7.60E-07	1.03	AIR OPERATED VALVE MV-F004B FAIL TO REMAIN OPEN
P41-ACV-OC-F006A	2.40E-05	7.60E-07	1.03	AIR OPERATED VALVE MV-F006A FAILS TO REMAIN OPEN
P41-ACV-OC-F006B	2.40E-05	7.60E-07	1.03	AIR OPERATED VALVE MV-F006B FAILS TO REMAIN OPEN
P41-ACV-OC-F009A	2.40E-05	7.60E-07	1.03	AIR OPERATED VALVE MV-F009A FAIL TO REMAIN OPEN
P41-ACV-OC-F009B	2.40E-05	7.60E-07	1.03	AIR OPERATED VALVE MV-F009B FAILS TO REMAIN OPEN
P41-FAN-FR_1_2	4.44E-06	9.00E-08	1.02	CCF of two components: P41-FAN-FR-0001A & P41-FAN-FR-0001B

Table 14.6-5

High Wind Shutdown Importance Measure Report

CDF = 3.95E-08

Event Name	Probability	Fus Ves	RAW	Description
P41-FAN-FR_1_4	4.44E-06	9.00E-08	1.02	CCF of two components: P41-FAN-FR-0001A & P41-FAN-FR-0002B
P41-FAN-FR_2_3	4.44E-06	9.00E-08	1.02	CCF of two components: P41-FAN-FR-0001B & P41-FAN-FR-0002A
P41-FAN-FR_3_4	4.44E-06	9.00E-08	1.02	CCF of two components: P41-FAN-FR-0002A & P41-FAN-FR-0002B
P41-FAN-FR_ALL	1.20E-05	1.11E-05	1.91	CCF of all components in group 'P41-FAN-FR'
P41-FAN-FR-0001A	2.40E-04	3.04E-06	1.01	MECHANICAL DRAFT COOLING TOWER FAN 1A FAILS TO RUN
P41-FAN-FR-0001B	2.40E-04	3.46E-06	1.01	MECHANICAL DRAFT COOLING TOWER FAN 1B FAILS TO RUN
P41-FAN-FR-0002A	2.40E-04	3.04E-06	1.01	MECHANICAL DRAFT COOLING TOWER FAN 2A FAILS TO RUN
P41-FAN-FR-0002B	2.40E-04	3.46E-06	1.01	MECHANICAL DRAFT COOLING TOWER FAN 2B FAILS TO RUN
P41-FAN-FS_1_2	5.26E-06	2.25E-07	1.04	CCF of two components: P41-FAN-FS-0001A & P41-FAN-FS-0001B
P41-FAN-FS_1_2_3	5.26E-07	9.00E-08	1.16	CCF of three components: P41-FAN-FS-0001A & P41-FAN-FS-0001B & P41-FAN-FS-0002A
P41-FAN-FS_1_2_4	5.26E-07	9.00E-08	1.16	CCF of three components: P41-FAN-FS-0001A & P41-FAN-FS-0001B & P41-FAN-FS-0002B
P41-FAN-FS_1_3_4	5.26E-07	9.00E-08	1.16	CCF of three components: P41-FAN-FS-0001A & P41-FAN-FS-0002A & P41-FAN-FS-0002B

Table 14.6-5

High Wind Shutdown Importance Measure Report

CDF = 3.95E-08

Event Name	Probability	Fus Ves	RAW	Description
P41-FAN-FS_1_4	5.26E-06	2.25E-07	1.04	CCF of two components: P41-FAN-FS-0001A & P41-FAN-FS-0002B
P41-FAN-FS_2_3	5.26E-06	2.25E-07	1.04	CCF of two components: P41-FAN-FS-0001B & P41-FAN-FS-0002A
P41-FAN-FS_2_3_4	5.26E-07	9.00E-08	1.16	CCF of three components: P41-FAN-FS-0001B & P41-FAN-FS-0002A & P41-FAN-FS-0002B
P41-FAN-FS_3_4	5.26E-06	2.25E-07	1.04	CCF of two components: P41-FAN-FS-0002A & P41-FAN-FS-0002B
P41-FAN-FS_ALL	1.42E-05	1.42E-05	1.98	CCF of all components in group 'P41-FAN-FS'
P41-FAN-FS-0001A	6.00E-04	1.22E-05	1.02	MECHANICAL DRAFT COOLING TOWER FAN 1A FAILS TO START
P41-FAN-FS-0001B	6.00E-04	1.46E-05	1.02	MECHANICAL DRAFT COOLING TOWER FAN 1B FAILS TO START
P41-FAN-FS-0002A	6.00E-04	1.22E-05	1.02	MECHANICAL DRAFT COOLING TOWER FAN 2A FAILS TO START
P41-FAN-FS-0002B	6.00E-04	1.46E-05	1.02	MECHANICAL DRAFT COOLING TOWER FAN 2B FAILS TO START
P41-MOV-CC-PMP_1_2_3	1.36E-05	1.33E-05	1.96	CCF of three components: P41-MOV-CC-PMPF002A & P41-MOV-CC-PMPF002B & P41-MOV-CC-
P41-MOV-CC-PMP_1_2_4	1.36E-05	1.33E-05	1.96	CCF of three components: P41-MOV-CC-PMPF002A & P41-MOV-CC-PMPF002B & P41-MOV-CC-
P41-MOV-CC-PMP_1_3_4	1.36E-05	1.33E-05	1.96	CCF of three components: P41-MOV-CC-PMPF002A & P41-MOV-CC-PMPF004A & P41-MOV-CC-

Table 14.6-5

High Wind Shutdown Importance Measure Report

CDF = 3.95E-08

Event Name	Probability	Fus Ves	RAW	Description
P41-MOV-CC-PMP_2_3_4	1.36E-05	1.33E-05	1.96	CCF of three components: P41-MOV-CC-PMPF002B & P41-MOV-CC-PMPF004A & P41-MOV-CC-
P41-MOV-CC-PMP_ALL	1.45E-04	2.02E-04	2.39	CCF of all components in group 'P41-MOV-CC-PMP'
P41-MOV-CC-PMPF002A	4.00E-03	1.69E-04	1.04	MOTOR OPERATED VALVE F002A FAILS TO OPEN
P41-MOV-CC-PMPF002B	4.00E-03	2.13E-04	1.05	MOTOR OPERATED VALVE F002B FAILS TO OPEN
P41-MOV-CC-PMPF004A	4.00E-03	1.69E-04	1.04	MOTOR OPERATED VALVE MV-F004A FAILS TO OPEN
P41-MOV-CC-PMPF004B	4.00E-03	2.13E-04	1.05	MOTOR OPERATED VALVE F004B FAILS TO OPEN
P41-MPW-FR_ALL	3.20E-06	1.47E-06	1.45	CCF of all components in group 'P41-MPW-FR'
P41-MPW-FR-C001A	6.00E-04	1.23E-05	1.02	MOTOR DRIVEN PUMP C001A FAILS TO RUN
P41-MPW-FR-C001B	6.00E-04	1.47E-05	1.02	MOTOR DRIVEN PUMP C001B FAILS TO RUN,
P41-MPW-FR-C002A	6.00E-04	1.23E-05	1.02	MOTOR DRIVEN PUMP C002A FAILS TO RUN
P41-MPW-FR-C002B	6.00E-04	1.47E-05	1.02	MOTOR-DRIVEN PUMP C002B FAILS TO RUN
P41-MPW-FS_1_2_3	1.89E-05	2.01E-05	2.05	CCF of three components: P41-MPW-FS-C001A & P41-MPW-FS-C001B & P41-MPW-FS-C002A

Table 14.6-5

High Wind Shutdown Importance Measure Report

CDF = 3.95E-08

Event Name	Probability	Fus Ves	RAW	Description
P41-MPW-FS_1_2_4	1.89E-05	2.01E-05	2.05	CCF of three components: P41-MPW-FS-C001A & P41-MPW-FS-C001B & P41-MPW-FS-C002B
P41-MPW-FS_1_3_4	1.89E-05	2.01E-05	2.05	CCF of three components: P41-MPW-FS-C001A & P41-MPW-FS-C002A & P41-MPW-FS-C002B
P41-MPW-FS_2_3_4	1.89E-05	2.01E-05	2.05	CCF of three components: P41-MPW-FS-C001B & P41-MPW-FS-C002A & P41-MPW-FS-C002B
P41-MPW-FS_ALL	1.15E-04	1.57E-04	2.36	CCF of all components in group 'P41-MPW-FS'
P41-MPW-FS-C001A	2.00E-03	6.98E-05	1.03	MOTOR-DRIVEN PUMP C001A FAILS TO START
P41-MPW-FS-C001B	2.00E-03	8.64E-05	1.04	MOTOR-DRIVEN PUMP C001B FAILS TO START
P41-MPW-FS-C002A	2.00E-03	6.98E-05	1.03	MOTOR-DRIVEN PUMP C002A FAILS TO START
P41-MPW-FS-C002B	2.00E-03	8.64E-05	1.04	MOTOR-DRIVEN PUMP C002B FAILS TO START
P41-NSC-TM-C001B	1.50E-03	5.86E-05	1.04	PUMP C001B IN MAINTENANCE
P41-NSC-TM-C002B	1.50E-03	5.86E-05	1.04	PUMP C002B IN MAINTENANCE
P41-STR-PG_ALL	5.68E-06	3.73E-06	1.64	CCF of all components in group 'P41-STR-PG'
P41-STR-PG-D01A	2.40E-04	3.04E-06	1.01	STRAINER P41-D001A PLUGGED

Table 14.6-5

High Wind Shutdown Importance Measure Report

CDF = 3.95E-08

Event Name	Probability	Fus Ves	RAW	Description
P41-STR-PG-D01B	2.40E-04	3.46E-06	1.01	STRAINER P41-D001B PLUGGED
P41-STR-PG-D02A	2.40E-04	3.04E-06	1.01	STRAINER P41-D002A PLUGGED
P41-STR-PG-D02B	2.40E-04	3.46E-06	1.01	STRAINER P41-D002B PLUGGED
P41-SYS-FC-HVACPSW-A	1.00E-03	4.51E-05	1.04	PSW-A ROOM COOLING FAILURE
P41-SYS-FC-HVACPSW-B	1.00E-03	4.99E-05	1.05	PSW-B ROOM COOLING FAILURE
P41-TRN-RE-PUMP1A	8.07E-03	3.83E-04	1.05	FAILURE TO RESTORE PSW PUMP 1A
P41-TRN-RE-PUMP1B	8.07E-03	4.95E-04	1.06	FAILURE TO RESTORE PSW PUMP 1B
P41-TRN-RE-PUMP2A	8.07E-03	3.83E-04	1.05	FAILURE TO RESTORE PSW PUMP 2A
P41-TRN-RE-PUMP2B	8.07E-03	4.95E-04	1.06	FAILURE TO RESTORE PSW PUMP 2B
P41-UV_-CC-PMP_ALL	1.72E-06	5.63E-07	1.32	CCF of all components in group 'P41-UV_-CC-PMP'
P41-UV_-CC-PMPF001A	1.00E-04	4.05E-07	1	CHECK VALVE F001A FAILS TO OPEN
P41-UV_-CC-PMPF001B	1.00E-04	4.05E-07	1	CHECK VALVE F001B FAILS TO OPEN

Table 14.6-5

High Wind Shutdown Importance Measure Report

CDF = 3.95E-08

Event Name	Probability	Fus Ves	RAW	Description
P41-UV_-CC-PMPF003A	1.00E-04	4.05E-07	1	CHECK VALVE F003A FAILS TO OPEN
P41-UV_-CC-PMPF003B	1.00E-04	4.05E-07	1	CHECK VALVE F003B FAILS TO OPEN
R11-MCB-CC-A3RATAY	5.00E-04	8.84E-05	1.17	MEDIUM CIRCUIT BREAKER FOR RAT A Y-WINDING FAILS TO OPEN
R11-MCB-CC-A3UATAY	4.00E-03	1.24E-03	1.3	MEDIUM VOLTAGE CIRCUIT BREAKER FOR UAT A Y-WINDING FAILS TO OPEN
R11-MCB-CC-B3RATBY	5.00E-04	8.82E-05	1.17	MEDIUM CIRCUIT BREAKER FOR RAT B Y-WINDING FAILS TO OPEN
R11-MCB-CC-B3UATBY	4.00E-03	1.22E-03	1.3	MEDIUM VOLTAGE CIRCUIT BREAKER FOR UAT B Y-WINDING FAILS TO OPEN
R11-MCB-CC-CCFNORM_1_3	3.18E-05	1.05E-06	1.03	CCF of two components: R11-MCB-CC-A1UATAX & R11-MCB-CC-A3RATAY
R11-MCB-CC-CCFNORM_1_3_7	1.06E-06	3.21E-07	1.28	CCF of three components: R11-MCB-CC-A1UATAX & R11-MCB-CC-A3RATAY & R11-MCB-CC-B3
R11-MCB-CC-CCFNORM_1_3_8	1.06E-06	3.21E-07	1.28	CCF of three components: R11-MCB-CC-A1UATAX & R11-MCB-CC-A3RATAY & R11-MCB-CC-B3
R11-MCB-CC-CCFNORM_1_4	3.18E-05	1.05E-06	1.03	CCF of two components: R11-MCB-CC-A1UATAX & R11-MCB-CC-A3UATAY
R11-MCB-CC-CCFNORM_1_4_7	1.06E-06	3.21E-07	1.28	CCF of three components: R11-MCB-CC-A1UATAX & R11-MCB-CC-A3UATAY & R11-MCB-CC-B3
R11-MCB-CC-CCFNORM_1_4_8	1.06E-06	3.21E-07	1.28	CCF of three components: R11-MCB-CC-A1UATAX & R11-MCB-CC-A3UATAY & R11-MCB-CC-B3

Table 14.6-5

High Wind Shutdown Importance Measure Report

CDF = 3.95E-08

Event Name	Probability	Fus Ves	RAW	Description
R11-MCB-CC-CCFNORM_1_7	3.18E-05	1.05E-06	1.03	CCF of two components: R11-MCB-CC-A1UATAX & R11-MCB-CC-B3RATBY
R11-MCB-CC-CCFNORM_1_8	3.18E-05	1.05E-06	1.03	CCF of two components: R11-MCB-CC-A1UATAX & R11-MCB-CC-B3UATBY
R11-MCB-CC-CCFNORM_2_3	3.18E-05	1.05E-06	1.03	CCF of two components: R11-MCB-CC-A2UATAX & R11-MCB-CC-A3RATAY
R11-MCB-CC-CCFNORM_2_3_7	1.06E-06	3.21E-07	1.28	CCF of three components: R11-MCB-CC-A2UATAX & R11-MCB-CC-A3RATAY & R11-MCB-CC-B3
R11-MCB-CC-CCFNORM_2_3_8	1.06E-06	3.21E-07	1.28	CCF of three components: R11-MCB-CC-A2UATAX & R11-MCB-CC-A3RATAY & R11-MCB-CC-B3
R11-MCB-CC-CCFNORM_2_4	3.18E-05	1.05E-06	1.03	CCF of two components: R11-MCB-CC-A2UATAX & R11-MCB-CC-A3UATAY
R11-MCB-CC-CCFNORM_2_4_7	1.06E-06	3.21E-07	1.28	CCF of three components: R11-MCB-CC-A2UATAX & R11-MCB-CC-A3UATAY & R11-MCB-CC-B3
R11-MCB-CC-CCFNORM_2_4_8	1.06E-06	3.21E-07	1.28	CCF of three components: R11-MCB-CC-A2UATAX & R11-MCB-CC-A3UATAY & R11-MCB-CC-B3
R11-MCB-CC-CCFNORM_2_7	3.18E-05	1.05E-06	1.03	CCF of two components: R11-MCB-CC-A2UATAX & R11-MCB-CC-B3RATBY
R11-MCB-CC-CCFNORM_2_8	3.18E-05	1.05E-06	1.03	CCF of two components: R11-MCB-CC-A2UATAX & R11-MCB-CC-B3UATBY
R11-MCB-CC-CCFNORM_3_4	3.18E-05	1.05E-06	1.03	CCF of two components: R11-MCB-CC-A3RATAY & R11-MCB-CC-A3UATAY
R11-MCB-CC-CCFNORM_3_4_7	1.06E-06	3.21E-07	1.28	CCF of three components: R11-MCB-CC-A3RATAY & R11-MCB-CC-A3UATAY & R11-MCB-CC-B3

Table 14.6-5

High Wind Shutdown Importance Measure Report

CDF = 3.95E-08

Event Name	Probability	Fus Ves	RAW	Description
R11-MCB-CC-CCFNORM_3_4_8	1.06E-06	3.21E-07	1.28	CCF of three components: R11-MCB-CC-A3RATAY & R11-MCB-CC-A3UATAY & R11-MCB-CC-B3
R11-MCB-CC-CCFNORM_3_5	3.18E-05	1.05E-06	1.03	CCF of two components: R11-MCB-CC-A3RATAY & R11-MCB-CC-B1UATBX
R11-MCB-CC-CCFNORM_3_5_7	1.06E-06	3.21E-07	1.28	CCF of three components: R11-MCB-CC-A3RATAY & R11-MCB-CC-B1UATBX & R11-MCB-CC-B3
R11-MCB-CC-CCFNORM_3_5_8	1.06E-06	3.21E-07	1.28	CCF of three components: R11-MCB-CC-A3RATAY & R11-MCB-CC-B1UATBX & R11-MCB-CC-B3
R11-MCB-CC-CCFNORM_3_6	3.18E-05	1.05E-06	1.03	CCF of two components: R11-MCB-CC-A3RATAY & R11-MCB-CC-B2UATBX
R11-MCB-CC-CCFNORM_3_6_7	1.06E-06	3.21E-07	1.28	CCF of three components: R11-MCB-CC-A3RATAY & R11-MCB-CC-B2UATBX & R11-MCB-CC-B3
R11-MCB-CC-CCFNORM_3_6_8	1.06E-06	3.21E-07	1.28	CCF of three components: R11-MCB-CC-A3RATAY & R11-MCB-CC-B2UATBX & R11-MCB-CC-B3
R11-MCB-CC-CCFNORM_3_7	3.18E-05	3.69E-05	2.15	CCF of two components: R11-MCB-CC-A3RATAY & R11-MCB-CC-B3RATBY
R11-MCB-CC-CCFNORM_3_7_8	1.06E-06	3.21E-07	1.28	CCF of three components: R11-MCB-CC-A3RATAY & R11-MCB-CC-B3RATBY & R11-MCB-CC-B3
R11-MCB-CC-CCFNORM_3_8	3.18E-05	3.69E-05	2.15	CCF of two components: R11-MCB-CC-A3RATAY & R11-MCB-CC-B3UATBY
R11-MCB-CC-CCFNORM_4_5	3.18E-05	1.05E-06	1.03	CCF of two components: R11-MCB-CC-A3UATAY & R11-MCB-CC-B1UATBX
R11-MCB-CC-CCFNORM_4_5_7	1.06E-06	3.21E-07	1.28	CCF of three components: R11-MCB-CC-A3UATAY & R11-MCB-CC-B1UATBX & R11-MCB-CC-B3

Table 14.6-5

High Wind Shutdown Importance Measure Report

CDF = 3.95E-08

Event Name	Probability	Fus Ves	RAW	Description
R11-MCB-CC-CCFNORM_4_5_8	1.06E-06	3.21E-07	1.28	CCF of three components: R11-MCB-CC-A3UATAY & R11-MCB-CC-B1UATBX & R11-MCB-CC-B3
R11-MCB-CC-CCFNORM_4_6	3.18E-05	1.05E-06	1.03	CCF of two components: R11-MCB-CC-A3UATAY & R11-MCB-CC-B2UATBX
R11-MCB-CC-CCFNORM_4_6_7	1.06E-06	3.21E-07	1.28	CCF of three components: R11-MCB-CC-A3UATAY & R11-MCB-CC-B2UATBX & R11-MCB-CC-B3
R11-MCB-CC-CCFNORM_4_6_8	1.06E-06	3.21E-07	1.28	CCF of three components: R11-MCB-CC-A3UATAY & R11-MCB-CC-B2UATBX & R11-MCB-CC-B3
R11-MCB-CC-CCFNORM_4_7	3.18E-05	3.69E-05	2.15	CCF of two components: R11-MCB-CC-A3UATAY & R11-MCB-CC-B3RATBY
R11-MCB-CC-CCFNORM_4_7_8	1.06E-06	3.21E-07	1.28	CCF of three components: R11-MCB-CC-A3UATAY & R11-MCB-CC-B3RATBY & R11-MCB-CC-B3
R11-MCB-CC-CCFNORM_4_8	3.18E-05	3.69E-05	2.15	CCF of two components: R11-MCB-CC-A3UATAY & R11-MCB-CC-B3UATBY
R11-MCB-CC-CCFNORM_5_7	3.18E-05	1.05E-06	1.03	CCF of two components: R11-MCB-CC-B1UATBX & R11-MCB-CC-B3RATBY
R11-MCB-CC-CCFNORM_5_8	3.18E-05	1.05E-06	1.03	CCF of two components: R11-MCB-CC-B1UATBX & R11-MCB-CC-B3UATBY
R11-MCB-CC-CCFNORM_6_7	3.18E-05	1.05E-06	1.03	CCF of two components: R11-MCB-CC-B2UATBX & R11-MCB-CC-B3RATBY
R11-MCB-CC-CCFNORM_6_8	3.18E-05	1.05E-06	1.03	CCF of two components: R11-MCB-CC-B2UATBX & R11-MCB-CC-B3UATBY
R11-MCB-CC-CCFNORM_7_8	3.18E-05	1.05E-06	1.03	CCF of two components: R11-MCB-CC-B3RATBY & R11-MCB-CC-B3UATBY

Table 14.6-5

High Wind Shutdown Importance Measure Report

CDF = 3.95E-08

Event Name	Probability	Fus Ves	RAW	Description
R11-MCB-CC-CCFNORM_ALL	2.00E-04	2.88E-04	2.43	CCF of all components in group 'R11-MCB-CC-CCFNORM'
R11-MCB-CO-A3DGA	1.44E-05	2.87E-07	1.02	MEDIUM VOLTAGE CIRCUIT BREAKER FOR DG-A OPENS SPURIOUSLY
R11-MCB-CO-B3DGB	1.44E-05	2.87E-07	1.02	MEDIUM VOLTAGE CIRCUIT BREAKER FOR DG-B OPENS SPURIOUSLY
R11-MCB-OO-A3DGA	2.40E-03	6.74E-04	1.28	MEDIUM VOLTAGE CIRCUIT BREAKER FOR DG-A FAILS TO CLOSE
R11-MCB-OO-B3DGA	2.40E-03	6.67E-04	1.27	MEDIUM VOLTAGE CIRCUIT BREAKER FOR DG-B FAILS TO CLOSE
R11-MCB-OO-CCFALT_1_3	1.91E-05	5.29E-07	1.03	CCF of two components: R11-MCB-OO-A1RATAX & R11-MCB-OO-A3DGA
R11-MCB-OO-CCFALT_1_3_7	6.35E-07	1.07E-07	1.16	CCF of three components: R11-MCB-OO-A1RATAX & R11-MCB-OO-A3DGA & R11-MCB-OO-B3DG
R11-MCB-OO-CCFALT_1_7	1.91E-05	5.29E-07	1.03	CCF of two components: R11-MCB-OO-A1RATAX & R11-MCB-OO-B3DGA
R11-MCB-OO-CCFALT_2_3	1.91E-05	5.29E-07	1.03	CCF of two components: R11-MCB-OO-A2RATAX & R11-MCB-OO-A3DGA
R11-MCB-OO-CCFALT_2_3_7	6.35E-07	1.07E-07	1.16	CCF of three components: R11-MCB-OO-A2RATAX & R11-MCB-OO-A3DGA & R11-MCB-OO-B3DG
R11-MCB-OO-CCFALT_2_7	1.91E-05	5.29E-07	1.03	CCF of two components: R11-MCB-OO-A2RATAX & R11-MCB-OO-B3DGA
R11-MCB-OO-CCFALT_3_4	1.91E-05	5.29E-07	1.03	CCF of two components: R11-MCB-OO-A3DGA & R11-MCB-OO-A3RATAY

Table 14.6-5

High Wind Shutdown Importance Measure Report

CDF = 3.95E-08

Event Name	Probability	Fus Ves	RAW	Description
R11-MCB-OO-CCFALT_3_4_7	6.35E-07	1.07E-07	1.16	CCF of three components: R11-MCB-OO-A3DGA & R11-MCB-OO-A3RATAY & R11-MCB-OO-B3DG
R11-MCB-OO-CCFALT_3_5	1.91E-05	5.29E-07	1.03	CCF of two components: R11-MCB-OO-A3DGA & R11-MCB-OO-B1RATBX
R11-MCB-OO-CCFALT_3_5_7	6.35E-07	1.07E-07	1.16	CCF of three components: R11-MCB-OO-A3DGA & R11-MCB-OO-B1RATBX & R11-MCB-OO-B3DG
R11-MCB-OO-CCFALT_3_6	1.91E-05	5.29E-07	1.03	CCF of two components: R11-MCB-OO-A3DGA & R11-MCB-OO-B2RATBX
R11-MCB-OO-CCFALT_3_6_7	6.35E-07	1.07E-07	1.16	CCF of three components: R11-MCB-OO-A3DGA & R11-MCB-OO-B2RATBX & R11-MCB-OO-B3DG
R11-MCB-OO-CCFALT_3_7	1.91E-05	2.03E-05	2.05	CCF of two components: R11-MCB-OO-A3DGA & R11-MCB-OO-B3DGA
R11-MCB-OO-CCFALT_3_7_8	6.35E-07	1.07E-07	1.16	CCF of three components: R11-MCB-OO-A3DGA & R11-MCB-OO-B3DGA & R11-MCB-OO-B3RATB
R11-MCB-OO-CCFALT_3_8	1.91E-05	5.29E-07	1.03	CCF of two components: R11-MCB-OO-A3DGA & R11-MCB-OO-B3RATBY
R11-MCB-OO-CCFALT_4_7	1.91E-05	5.29E-07	1.03	CCF of two components: R11-MCB-OO-A3RATAY & R11-MCB-OO-B3DGA
R11-MCB-OO-CCFALT_5_7	1.91E-05	5.29E-07	1.03	CCF of two components: R11-MCB-OO-B1RATBX & R11-MCB-OO-B3DGA
R11-MCB-OO-CCFALT_6_7	1.91E-05	5.29E-07	1.03	CCF of two components: R11-MCB-OO-B2RATBX & R11-MCB-OO-B3DGA
R11-MCB-OO-CCFALT_7_8	1.91E-05	5.29E-07	1.03	CCF of two components: R11-MCB-OO-B3DGA & R11-MCB-OO-B3RATBY

Table 14.6-5

High Wind Shutdown Importance Measure Report

CDF = 3.95E-08

Event Name	Probability	Fus Ves	RAW	Description
R11-MCB-OO-CCFALT_ALL	1.20E-04	1.65E-04	2.37	CCF of all components in group 'R11-MCB-OO-CCFALT'
R11-RE_-FO-CCFUV_1_3	9.73E-06	1.18E-07	1.01	CCF of two components: R11-RE_-FO-UV00A1 & R11-RE_-FO-UV00A3
R11-RE_-FO-CCFUV_1_3_6	4.86E-07	2.81E-08	1.06	CCF of three components: R11-RE_-FO-UV00A1 & R11-RE_-FO-UV00A3 & R11-RE_-FO-UV00
R11-RE_-FO-CCFUV_1_6	9.73E-06	1.18E-07	1.01	CCF of two components: R11-RE_-FO-UV00A1 & R11-RE_-FO-UV00B3
R11-RE_-FO-CCFUV_2_3	9.73E-06	1.18E-07	1.01	CCF of two components: R11-RE_-FO-UV00A2 & R11-RE_-FO-UV00A3
R11-RE_-FO-CCFUV_2_3_6	4.86E-07	2.81E-08	1.06	CCF of three components: R11-RE_-FO-UV00A2 & R11-RE_-FO-UV00A3 & R11-RE_-FO-UV00
R11-RE_-FO-CCFUV_2_6	9.73E-06	1.18E-07	1.01	CCF of two components: R11-RE_-FO-UV00A2 & R11-RE_-FO-UV00B3
R11-RE_-FO-CCFUV_3_4	9.73E-06	1.18E-07	1.01	CCF of two components: R11-RE_-FO-UV00A3 & R11-RE_-FO-UV00B1
R11-RE_-FO-CCFUV_3_4_6	4.86E-07	2.81E-08	1.06	CCF of three components: R11-RE_-FO-UV00A3 & R11-RE_-FO-UV00B1 & R11-RE_-FO-UV00
R11-RE_-FO-CCFUV_3_5	9.73E-06	1.18E-07	1.01	CCF of two components: R11-RE_-FO-UV00A3 & R11-RE_-FO-UV00B2
R11-RE_-FO-CCFUV_3_5_6	4.86E-07	2.81E-08	1.06	CCF of three components: R11-RE_-FO-UV00A3 & R11-RE_-FO-UV00B2 & R11-RE_-FO-UV00
R11-RE_-FO-CCFUV_3_6	9.73E-06	8.33E-06	1.84	CCF of two components: R11-RE_-FO-UV00A3 & R11-RE_-FO-UV00B3

Table 14.6-5

High Wind Shutdown Importance Measure Report

CDF = 3.95E-08

Event Name	Probability	Fus Ves	RAW	Description
R11-RE_-FO-CCFUV_4_6	9.73E-06	1.18E-07	1.01	CCF of two components: R11-RE_-FO-UV00B1 & R11-RE_-FO-UV00B3
R11-RE_-FO-CCFUV_5_6	9.73E-06	1.18E-07	1.01	CCF of two components: R11-RE_-FO-UV00B2 & R11-RE_-FO-UV00B3
R11-RE_-FO-CCFUV_ALL	4.38E-05	5.34E-05	2.21	CCF of all components in group 'R11-RE_-FO-CCFUV'
R11-RE_-FO-UV00A3	8.75E-04	1.85E-04	1.21	1000A3 UV RELAY FAILS TO OPERATE ON UV COND
R11-RE_-FO-UV00B3	8.75E-04	1.84E-04	1.21	1000B3 UV RELAY FAILS TO OPERATE ON UV COND
R12-LCB-CO-BOA2-01A	1.20E-05	1.97E-07	1.02	R12-A2-01A XMFR OUTPUT CIRCUIT BREAKER TO BUS R12-A2-01A OPEN SPURIOUSLY
R12-LCB-CO-BOB2-01B	1.20E-05	1.97E-07	1.02	R12-B2-01B XMFR OUTPUT CIRCUIT BREAKER TO BUS R12-B2-01B OPEN SPURIOUSLY
R12-MCB-CO-BIA2-01A	1.44E-05	2.87E-07	1.02	R12-A2-01A XMFR INPUT CIRCUIT BREAKER FROM PIP BUS 1000A3 OPENS SPURIOUSLY
R12-MCB-CO-BIB2-01B	1.44E-05	2.87E-07	1.02	R12-B2-01B XMFR INPUT CIRCUIT BREAKER FROM PIP BUS 1000B3 OPENS SPURIOUSLY
R12-XFL-LP-XA2-01A	1.92E-05	5.29E-07	1.03	R12-A2-01A XMFR FROM PIP BUS 1000A3 FAILS TO OPERATE
R12-XFL-LP-XB2-01B	1.92E-05	5.29E-07	1.03	R12-B2-01B XMFR FROM PIP BUS 1000B3 FAILS TO OPERATE
R13-BAC-LP-R1311	4.80E-06	1.01E-07	1.02	BUS R13-11 FAILS DURING OPERATION

Table 14.6-5

High Wind Shutdown Importance Measure Report

CDF = 3.95E-08

Event Name	Probability	Fus Ves	RAW	Description
R13-BAC-LP-R1321	4.80E-06	1.01E-07	1.02	BUS R13-21 FAILS DURING OPERATION
R13-BAC-LP-R1331	4.80E-06	1.01E-07	1.02	BUS R13-31 FAILS DURING OPERATION
R13-BAC-LP-R1341	4.80E-06	1.01E-07	1.02	BUS R13-41 FAILS DURING OPERATION
R13-INV-FC-CCFSR_1_3_5	6.01E-08	2.93E-07	5.77	CCF of three components: R13-INV-FC-R1311 & R13-INV-FC-R1321 & R13-INV-FC-R1331
R13-INV-FC-CCFSR_1_3_6	6.01E-08	2.93E-07	5.77	CCF of three components: R13-INV-FC-R1311 & R13-INV-FC-R1321 & R13-INV-FC-R1332
R13-INV-FC-CCFSR_1_4_5	6.01E-08	2.93E-07	5.77	CCF of three components: R13-INV-FC-R1311 & R13-INV-FC-R1322 & R13-INV-FC-R1331
R13-INV-FC-CCFSR_1_4_6	6.01E-08	2.93E-07	5.77	CCF of three components: R13-INV-FC-R1311 & R13-INV-FC-R1322 & R13-INV-FC-R1332
R13-INV-FC-CCFSR_2_3_5	6.01E-08	2.93E-07	5.77	CCF of three components: R13-INV-FC-R1312 & R13-INV-FC-R1321 & R13-INV-FC-R1331
R13-INV-FC-CCFSR_2_3_6	6.01E-08	2.93E-07	5.77	CCF of three components: R13-INV-FC-R1312 & R13-INV-FC-R1321 & R13-INV-FC-R1332
R13-INV-FC-CCFSR_2_4_5	6.01E-08	2.93E-07	5.77	CCF of three components: R13-INV-FC-R1312 & R13-INV-FC-R1322 & R13-INV-FC-R1331
R13-INV-FC-CCFSR_2_4_6	6.01E-08	2.93E-07	5.77	CCF of three components: R13-INV-FC-R1312 & R13-INV-FC-R1322 & R13-INV-FC-R1332
R13-INV-FC-CCFSR_ALL	1.14E-05	1.76E-02	1.55E+03	CCF of all components in group 'R13-INV-FC-CCFSR'

Table 14.6-5

High Wind Shutdown Importance Measure Report

CDF = 3.95E-08

Event Name	Probability	Fus Ves	RAW	Description
R13-LCB-CO-TOR1311	1.20E-05	2.36E-07	1.02	CIRCUIT BREAKER TO R13-11 OPENS SPURIOUSLY
R13-LCB-CO-TOR1321	1.20E-05	2.36E-07	1.02	CIRCUIT BREAKER TO R13-21 OPENS SPURIOUSLY
R13-LCB-CO-TOR1331	1.20E-05	2.36E-07	1.02	CIRCUIT BREAKER TO R13-31 OPENS SPURIOUSLY
R13-LCB-CO-TOR1341	1.20E-05	2.36E-07	1.02	CIRCUIT BREAKER TO R13-41 OPENS SPURIOUSLY
R16-BDC-TM-R16A3	5.00E-04	8.84E-05	1.17	DC BUS R16-A3 IN MAINTENANCE
R16-BDC-TM-R16B3	5.00E-04	8.82E-05	1.17	DC BUS R16-B3 IN MAINTENANCE
R16-BT_-LP-CCFA3B3_1_2	1.43E-06	4.67E-07	1.32	CCF of two components: R16-BT_-LP-R16BTA3 & R16-BT_-LP-R16BTB3
R16-BT_-LP-CCFSR_ALL	8.14E-07	1.21E-03	1.49E+03	CCF of all components in group 'R16-BT_-LP-CCFSR'
R16-BT_-LP-R16BTA3	4.80E-05	1.97E-06	1.04	BATTERY R16-BTA3 FAILS TO PROVIDE OUTPUT
R16-BT_-LP-R16BTB3	4.80E-05	1.97E-06	1.04	BATTERY R16-BTB3 FAILS TO PROVIDE OUTPUT
R16-BT_-TM-R16BTA3	5.00E-04	8.84E-05	1.17	BATTERY R16-BTA3 IN TEST AND MAINTENANCE
R16-BT_-TM-R16BTB3	5.00E-04	8.82E-05	1.17	BATTERY R16-BTB3 IN TEST AND MAINTENANCE

Table 14.6-5

High Wind Shutdown Importance Measure Report

CDF = 3.95E-08

Event Name	Probability	Fus Ves	RAW	Description
R16-LCB-CO-FROMR16BTA3	1.20E-05	1.97E-07	1.02	CIRCUIT BREAKER FROM R16-BTA3 OPENS SPURIOUSLY
R16-LCB-CO-FROMR16BTB3	1.20E-05	1.97E-07	1.02	CIRCUIT BREAKER FROM R16-BTB 3OPENS SPURIOUSLY
R16-LCB-CO-R16A3SWGR1	1.20E-05	1.97E-07	1.02	CIRCUIT BREAKER 1 FROM R16-A3 OPENS SPURIOUSLY
R16-LCB-CO-R16A3SWGR2	1.20E-05	1.97E-07	1.02	CIRCUIT BREAKER 2 FROM R16-A3 OPENS SPURIOUSLY
R16-LCB-CO-R16B3SWGR1	1.20E-05	1.97E-07	1.02	CIRCUIT BREAKER 1 FROM R16-B3 OPENS SPURIOUSLY
R16-LCB-CO-R16B3SWGR2	1.20E-05	1.97E-07	1.02	CIRCUIT BREAKER 2 FROM R16-B3 OPENS SPURIOUSLY
R21-AHU-FR-3A	2.40E-04	3.19E-05	1.13	AIR HANDLING UNIT FAILS TO RUN
R21-AHU-FR-3B	2.40E-04	3.19E-05	1.13	AIR HANDLING UNIT FAILS TO RUN
R21-AHU-FR-AHU3_1_2	1.26E-05	1.17E-05	1.91	CCF of two components: R21-AHU-FR-3A & R21-AHU-FR-3B
R21-AHU-FS-3A	6.00E-03	1.97E-03	1.32	AIR HANDLING UNIT FAILS TO START
R21-AHU-FS-3B	6.00E-03	1.94E-03	1.32	AIR HANDLING UNIT FAILS TO START
R21-AHU-FS-AHU3_1_2	6.67E-04	1.01E-03	2.51	CCF of two components: R21-AHU-FS-3A & R21-AHU-FS-3B

Table 14.6-5

High Wind Shutdown Importance Measure Report

CDF = 3.95E-08

Event Name	Probability	Fus Ves	RAW	Description
R21-BAC-LP-ANCA	4.80E-06	1.82E-06	1.36	AC ELECTRICAL BUSWORK FAILS DURING OPERATION
R21-BV_-OC-F7A	3.28E-05	1.11E-06	1.03	MANUAL VALVE PLUGS/TRANSFERS CLOSED
R21-BV_-OC-F7B	3.28E-05	1.11E-06	1.03	MANUAL VALVE PLUGS/TRANSFERS CLOSED
R21-BV_-OC-FOADG1A	3.28E-05	2.81E-08	1	MANUAL VALVE PLUGS/TRANSFERS CLOSED
R21-BV_-OC-FOADG1B	3.28E-05	2.81E-08	1	MANUAL VALVE PLUGS/TRANSFERS CLOSED
R21-BV_-OC-FOADG2A	3.28E-05	2.81E-08	1	MANUAL VALVE PLUGS/TRANSFERS CLOSED
R21-BV_-OC-FOADG2B	3.28E-05	2.81E-08	1	MANUAL VALVE PLUGS/TRANSFERS CLOSED
R21-DG_-FR-ADG_1_2	2.95E-03	5.93E-03	2.99	CCF of two components: R21-DG_-FR-ADGA & R21-DG_-FR-ADGB
R21-DG_-FR-ADGA	5.60E-02	1.87E-02	1.31	ADG-A FAILS TO RUN
R21-DG_-FR-ADGB	5.60E-02	1.66E-02	1.28	DIESEL GENERATOR FAILS TO RUN
R21-DG_-FR-CCF_1_2	4.41E-03	6.97E-03	2.57	CCF of two components: R21-DG_-FR-DGA & R21-DG_-FR-DGB
R21-DG_-FR-DGA	5.60E-02	2.21E-02	1.37	DIESEL GENERATOR "A" FAILS TO RUN GIVEN START

Table 14.6-5

High Wind Shutdown Importance Measure Report

CDF = 3.95E-08

Event Name	Probability	Fus Ves	RAW	Description
R21-DG_-FR-DGB	5.60E-02	2.17E-02	1.36	DIESEL GENERATOR "B" FAILS TO RUN GIVEN START
R21-DG_-FS-ADG_1_2	1.56E-03	2.96E-03	2.89	CCF of two components: R21-DG_-FS-ADGA & R21-DG_-FS-ADGB
R21-DG_-FS-ADGA	1.40E-02	3.86E-03	1.27	DIESEL GENERATOR FAILS TO START AND LOAD
R21-DG_-FS-ADGB	1.40E-02	3.48E-03	1.24	DIESEL GENERATOR FAILS TO START AND LOAD
R21-DG_-FS-CCF_1_2	2.86E-04	4.20E-04	2.46	CCF of two components: R21-DG_-FS-DGA & R21-DG_-FS-DGB
R21-DG_-FS-DGA	1.40E-02	5.03E-03	1.35	DG-A FAILS TO START AND LOAD
R21-DG_-FS-DGB	1.40E-02	4.95E-03	1.35	DG-B FAILS TO START AND LOAD
R21-DG_-TM-ADGA	4.60E-02	1.08E-02	1.22	ANCILLARY DG-A IN MAINTENANCE
R21-DG_-TM-ADGB	4.60E-02	9.27E-03	1.19	ANCILLARY DG-B IN MAINTENANCE
R21-DG_-TM-DGA	4.60E-02	1.47E-02	1.3	STANDBY DIESEL GENERATOR "A" IN MAINTENANCE
R21-DG_-TM-DGB	4.60E-02	1.44E-02	1.3	STANDBY DIESEL GENERATOR "B" IN MAINTENANCE
R21-FAN-FR-ADG_1_2	1.26E-05	5.35E-06	1.41	CCF of two components: R21-FAN-FR-ADGA & R21-FAN-FR-ADGB

Table 14.6-5

High Wind Shutdown Importance Measure Report

CDF = 3.95E-08

Event Name	Probability	Fus Ves	RAW	Description
R21-FAN-FR-ADGA	2.40E-04	1.35E-05	1.05	BLOWER/VENTILATION FAN FAILS TO RUN
R21-FAN-FR-ADGB	2.40E-04	1.27E-05	1.05	BLOWER/VENTILATION FAN FAILS TO RUN
R21-FAN-FR-AHU2_1_2	1.26E-05	1.17E-05	1.91	CCF of two components: R21-FAN-FR-AHU2A & R21-FAN-FR-AHU2B
R21-FAN-FR-AHU2A	2.40E-04	3.19E-05	1.13	DG-A NORMAL VENTILATION FAN FAILS TO RUN
R21-FAN-FR-AHU2B	2.40E-04	3.19E-05	1.13	DG-B NORMAL VENTILATION FAN FAILS TO RUN
R21-FAN-FR-ROOF_ALL	5.68E-06	3.73E-06	1.64	CCF of all components in group 'R21-FAN-FR-ROOF'
R21-FAN-FS-ADG_1_2	6.67E-05	6.66E-05	1.98	CCF of two components: R21-FAN-FS-ADGA & R21-FAN-FS-ADGB
R21-FAN-FS-ADGA	6.00E-04	5.97E-05	1.1	BLOWER/VENTILATION FAN FAILS TO START
R21-FAN-FS-ADGB	6.00E-04	5.60E-05	1.09	BLOWER/VENTILATION FAN FAILS TO START
R21-FAN-FS-AHU2_1_2	6.67E-05	8.56E-05	2.27	CCF of two components: R21-FAN-FS-AHU2A & R21-FAN-FS-AHU2B
R21-FAN-FS-AHU2A	6.00E-04	1.13E-04	1.19	DG-A NORMAL VENTILATION FAN FAILS TO RESTART
R21-FAN-FS-AHU2B	6.00E-04	1.13E-04	1.19	DG-B NORMAL VENTILATION FAN FAILS TO RESTART

Table 14.6-5

High Wind Shutdown Importance Measure Report

CDF = 3.95E-08

Event Name	Probability	Fus Ves	RAW	Description
R21-FAN-FS-ROOF_ALL	3.00E-05	3.48E-05	2.14	CCF of all components in group 'R21-FAN-FS-ROOF'
R21-FLT-PG-ADGA	1.08E-02	2.85E-03	1.26	FILTER PLUGGED
R21-FLT-PG-ADGB	1.08E-02	2.58E-03	1.23	FILTER PLUGGED
R21-FLT-PG-DGA	1.08E-02	3.81E-03	1.34	FILTER PLUGGED
R21-FLT-PG-DGB	1.08E-02	3.75E-03	1.34	FILTER PLUGGED
R21-LT_-NO-DGA	2.40E-05	7.60E-07	1.03	LEVEL TRANSMITTER FAILS TO RESPOND TO LEVEL CHANGES
R21-LT_-NO-DGB	2.40E-05	7.60E-07	1.03	LEVEL TRANSMITTER FAILS TO RESPOND TO LEVEL CHANGES
R21-MCB-CC-1LOAD1	5.00E-04	8.84E-05	1.17	CIRCUIT BREAKER TO LOAD 1 FAILS TO OPEN
R21-MCB-CC-1LOAD2	5.00E-04	8.84E-05	1.17	CIRCUIT BREAKER TO LOAD 2 FAILS TO OPEN
R21-MCB-CC-1LOAD3	5.00E-04	8.84E-05	1.17	CIRCUIT BREAKER TO LOAD 3 FAILS TO OPEN
R21-MCB-CC-1LOAD4	5.00E-04	8.84E-05	1.17	CIRCUIT BREAKER TO LOAD 4 FAILS TO OPEN
R21-MCB-CC-1LOAD5	5.00E-04	8.84E-05	1.17	CIRCUIT BREAKER TO LOAD 5 FAILS TO OPEN

Table 14.6-5

High Wind Shutdown Importance Measure Report

CDF = 3.95E-08

Event Name	Probability	Fus Ves	RAW	Description
R21-MCB-CC-2LOAD1	5.00E-04	8.82E-05	1.17	CIRCUIT BREAKER TO LOAD 1 FAILS TO OPEN
R21-MCB-CC-2LOAD2	5.00E-04	8.82E-05	1.17	CIRCUIT BREAKER TO LOAD 2 FAILS TO OPEN
R21-MCB-CC-2LOAD3	5.00E-04	8.82E-05	1.17	CIRCUIT BREAKER TO LOAD 3 FAILS TO OPEN
R21-MCB-CC-2LOAD4	5.00E-04	8.82E-05	1.17	CIRCUIT BREAKER TO LOAD 4 FAILS TO OPEN
R21-MCB-CC-2LOAD5	5.00E-04	8.82E-05	1.17	CIRCUIT BREAKER TO LOAD 5 FAILS TO OPEN
R21-MCB-CC-CCFLS_1_2	5.56E-05	6.97E-05	2.24	CCF of two components: R21-MCB-CC-1LOAD1 & R21-MCB-CC-2LOAD1
R21-MOD-CC-1A	3.00E-03	8.81E-04	1.29	MOTOR-OPERATED DAMPER FAILS TO OPEN
R21-MOD-CC-1B	3.00E-03	8.71E-04	1.29	MOTOR-OPERATED DAMPER FAILS TO OPEN
R21-MOD-CC-2A	3.00E-03	8.81E-04	1.29	MOTOR-OPERATED DAMPER FAILS TO OPEN
R21-MOD-CC-2B	3.00E-03	8.71E-04	1.29	MOTOR-OPERATED DAMPER FAILS TO OPEN
R21-MOD-CC-3A	3.00E-03	8.81E-04	1.29	MOTOR-OPERATED DAMPER FAILS TO OPEN
R21-MOD-CC-3B	3.00E-03	8.71E-04	1.29	MOTOR-OPERATED DAMPER FAILS TO OPEN

Table 14.6-5

High Wind Shutdown Importance Measure Report

CDF = 3.95E-08

Event Name	Probability	Fus Ves	RAW	Description
R21-MOD-CC-4A	3.00E-03	1.41E-07	1	MOTOR-OPERATED DAMPER FAILS TO OPEN
R21-MOD-CC-4B	3.00E-03	1.41E-07	1	MOTOR-OPERATED DAMPER FAILS TO OPEN
R21-MOD-CC-5A	3.00E-03	1.41E-07	1	MOTOR-OPERATED DAMPER FAILS TO OPEN
R21-MOD-CC-5B	3.00E-03	1.41E-07	1	MOTOR-OPERATED DAMPER FAILS TO OPEN
R21-MOD-CC-6A	3.00E-03	1.41E-07	1	MOTOR-OPERATED DAMPER FAILS TO OPEN
R21-MOD-CC-6B	3.00E-03	1.41E-07	1	MOTOR-OPERATED DAMPER FAILS TO OPEN
R21-MOD-CC-7A	3.00E-03	1.41E-07	1	MOTOR-OPERATED DAMPER FAILS TO OPEN
R21-MOD-CC-7B	3.00E-03	1.41E-07	1	MOTOR-OPERATED DAMPER FAILS TO OPEN
R21-MOD-CC-8A	3.00E-03	1.41E-07	1	MOTOR-OPERATED DAMPER FAILS TO OPEN
R21-MOD-CC-8B	3.00E-03	1.41E-07	1	MOTOR-OPERATED DAMPER FAILS TO OPEN
R21-MOD-CC-9A	3.00E-03	1.41E-07	1	MOTOR-OPERATED DAMPER FAILS TO OPEN
R21-MOD-CC-9B	3.00E-03	1.41E-07	1	MOTOR-OPERATED DAMPER FAILS TO OPEN

Table 14.6-5

High Wind Shutdown Importance Measure Report

CDF = 3.95E-08

Event Name	Probability	Fus Ves	RAW	Description
R21-MOD-CC-EXH_1_11	1.51E-05	3.04E-07	1.02	CCF of two components: R21-MOD-CC-4A & R21-MOD-CC-9A
R21-MOD-CC-EXH_1_3	1.51E-05	3.04E-07	1.02	CCF of two components: R21-MOD-CC-4A & R21-MOD-CC-5A
R21-MOD-CC-EXH_1_5	1.51E-05	3.04E-07	1.02	CCF of two components: R21-MOD-CC-4A & R21-MOD-CC-6A
R21-MOD-CC-EXH_1_7	1.51E-05	3.04E-07	1.02	CCF of two components: R21-MOD-CC-4A & R21-MOD-CC-7A
R21-MOD-CC-EXH_1_9	1.51E-05	3.04E-07	1.02	CCF of two components: R21-MOD-CC-4A & R21-MOD-CC-8A
R21-MOD-CC-EXH_10_12	1.51E-05	3.04E-07	1.02	CCF of two components: R21-MOD-CC-8B & R21-MOD-CC-9B
R21-MOD-CC-EXH_2_10	1.51E-05	3.04E-07	1.02	CCF of two components: R21-MOD-CC-4B & R21-MOD-CC-8B
R21-MOD-CC-EXH_2_12	1.51E-05	3.04E-07	1.02	CCF of two components: R21-MOD-CC-4B & R21-MOD-CC-9B
R21-MOD-CC-EXH_2_4	1.51E-05	3.04E-07	1.02	CCF of two components: R21-MOD-CC-4B & R21-MOD-CC-5B
R21-MOD-CC-EXH_2_6	1.51E-05	3.04E-07	1.02	CCF of two components: R21-MOD-CC-4B & R21-MOD-CC-6B
R21-MOD-CC-EXH_2_8	1.51E-05	3.04E-07	1.02	CCF of two components: R21-MOD-CC-4B & R21-MOD-CC-7B
R21-MOD-CC-EXH_3_11	1.51E-05	3.04E-07	1.02	CCF of two components: R21-MOD-CC-5A & R21-MOD-CC-9A

Table 14.6-5

High Wind Shutdown Importance Measure Report

CDF = 3.95E-08

Event Name	Probability	Fus Ves	RAW	Description
R21-MOD-CC-EXH_3_5	1.51E-05	3.04E-07	1.02	CCF of two components: R21-MOD-CC-5A & R21-MOD-CC-6A
R21-MOD-CC-EXH_3_7	1.51E-05	3.04E-07	1.02	CCF of two components: R21-MOD-CC-5A & R21-MOD-CC-7A
R21-MOD-CC-EXH_3_9	1.51E-05	3.04E-07	1.02	CCF of two components: R21-MOD-CC-5A & R21-MOD-CC-8A
R21-MOD-CC-EXH_4_10	1.51E-05	3.04E-07	1.02	CCF of two components: R21-MOD-CC-5B & R21-MOD-CC-8B
R21-MOD-CC-EXH_4_12	1.51E-05	3.04E-07	1.02	CCF of two components: R21-MOD-CC-5B & R21-MOD-CC-9B
R21-MOD-CC-EXH_4_6	1.51E-05	3.04E-07	1.02	CCF of two components: R21-MOD-CC-5B & R21-MOD-CC-6B
R21-MOD-CC-EXH_4_8	1.51E-05	3.04E-07	1.02	CCF of two components: R21-MOD-CC-5B & R21-MOD-CC-7B
R21-MOD-CC-EXH_5_11	1.51E-05	3.04E-07	1.02	CCF of two components: R21-MOD-CC-6A & R21-MOD-CC-9A
R21-MOD-CC-EXH_5_7	1.51E-05	3.04E-07	1.02	CCF of two components: R21-MOD-CC-6A & R21-MOD-CC-7A
R21-MOD-CC-EXH_5_9	1.51E-05	3.04E-07	1.02	CCF of two components: R21-MOD-CC-6A & R21-MOD-CC-8A
R21-MOD-CC-EXH_6_10	1.51E-05	3.04E-07	1.02	CCF of two components: R21-MOD-CC-6B & R21-MOD-CC-8B
R21-MOD-CC-EXH_6_12	1.51E-05	3.04E-07	1.02	CCF of two components: R21-MOD-CC-6B & R21-MOD-CC-9B

Table 14.6-5

High Wind Shutdown Importance Measure Report

CDF = 3.95E-08

Event Name	Probability	Fus Ves	RAW	Description
R21-MOD-CC-EXH_6_8	1.51E-05	3.04E-07	1.02	CCF of two components: R21-MOD-CC-6B & R21-MOD-CC-7B
R21-MOD-CC-EXH_7_11	1.51E-05	3.04E-07	1.02	CCF of two components: R21-MOD-CC-7A & R21-MOD-CC-9A
R21-MOD-CC-EXH_7_9	1.51E-05	3.04E-07	1.02	CCF of two components: R21-MOD-CC-7A & R21-MOD-CC-8A
R21-MOD-CC-EXH_8_10	1.51E-05	3.04E-07	1.02	CCF of two components: R21-MOD-CC-7B & R21-MOD-CC-8B
R21-MOD-CC-EXH_8_12	1.51E-05	3.04E-07	1.02	CCF of two components: R21-MOD-CC-7B & R21-MOD-CC-9B
R21-MOD-CC-EXH_9_11	1.51E-05	3.04E-07	1.02	CCF of two components: R21-MOD-CC-8A & R21-MOD-CC-9A
R21-MOD-CC-EXH_ALL	1.50E-04	2.10E-04	2.39	CCF of all components in group 'R21-MOD-CC-EXH'
R21-MOD-CC-INL_1_2	3.33E-05	3.90E-05	2.15	CCF of two components: R21-MOD-CC-1A & R21-MOD-CC-1B
R21-MOD-CC-INL_1_2_3	1.67E-06	5.46E-07	1.32	CCF of three components: R21-MOD-CC-1A & R21-MOD-CC-1B & R21-MOD-CC-2A
R21-MOD-CC-INL_1_2_4	1.67E-06	5.46E-07	1.32	CCF of three components: R21-MOD-CC-1A & R21-MOD-CC-1B & R21-MOD-CC-2B
R21-MOD-CC-INL_1_2_5	1.67E-06	5.46E-07	1.32	CCF of three components: R21-MOD-CC-1A & R21-MOD-CC-1B & R21-MOD-CC-3A
R21-MOD-CC-INL_1_2_6	1.67E-06	5.46E-07	1.32	CCF of three components: R21-MOD-CC-1A & R21-MOD-CC-1B & R21-MOD-CC-3B

Table 14.6-5

High Wind Shutdown Importance Measure Report

CDF = 3.95E-08

Event Name	Probability	Fus Ves	RAW	Description
R21-MOD-CC-INL_1_3	3.33E-05	1.16E-06	1.03	CCF of two components: R21-MOD-CC-1A & R21-MOD-CC-2A
R21-MOD-CC-INL_1_3_4	1.67E-06	5.46E-07	1.32	CCF of three components: R21-MOD-CC-1A & R21-MOD-CC-2A & R21-MOD-CC-2B
R21-MOD-CC-INL_1_3_6	1.67E-06	5.46E-07	1.32	CCF of three components: R21-MOD-CC-1A & R21-MOD-CC-2A & R21-MOD-CC-3B
R21-MOD-CC-INL_1_4	3.33E-05	3.90E-05	2.15	CCF of two components: R21-MOD-CC-1A & R21-MOD-CC-2B
R21-MOD-CC-INL_1_4_5	1.67E-06	5.46E-07	1.32	CCF of three components: R21-MOD-CC-1A & R21-MOD-CC-2B & R21-MOD-CC-3A
R21-MOD-CC-INL_1_4_6	1.67E-06	5.46E-07	1.32	CCF of three components: R21-MOD-CC-1A & R21-MOD-CC-2B & R21-MOD-CC-3B
R21-MOD-CC-INL_1_5	3.33E-05	1.16E-06	1.03	CCF of two components: R21-MOD-CC-1A & R21-MOD-CC-3A
R21-MOD-CC-INL_1_5_6	1.67E-06	5.46E-07	1.32	CCF of three components: R21-MOD-CC-1A & R21-MOD-CC-3A & R21-MOD-CC-3B
R21-MOD-CC-INL_1_6	3.33E-05	3.90E-05	2.15	CCF of two components: R21-MOD-CC-1A & R21-MOD-CC-3B
R21-MOD-CC-INL_2_3	3.33E-05	3.90E-05	2.15	CCF of two components: R21-MOD-CC-1B & R21-MOD-CC-2A
R21-MOD-CC-INL_2_3_4	1.67E-06	5.46E-07	1.32	CCF of three components: R21-MOD-CC-1B & R21-MOD-CC-2A & R21-MOD-CC-2B
R21-MOD-CC-INL_2_3_5	1.67E-06	5.46E-07	1.32	CCF of three components: R21-MOD-CC-1B & R21-MOD-CC-2A & R21-MOD-CC-3A

Table 14.6-5

High Wind Shutdown Importance Measure Report

CDF = 3.95E-08

Event Name	Probability	Fus Ves	RAW	Description
R21-MOD-CC-INL_2_3_6	1.67E-06	5.46E-07	1.32	CCF of three components: R21-MOD-CC-1B & R21-MOD-CC-2A & R21-MOD-CC-3B
R21-MOD-CC-INL_2_4	3.33E-05	1.16E-06	1.03	CCF of two components: R21-MOD-CC-1B & R21-MOD-CC-2B
R21-MOD-CC-INL_2_4_5	1.67E-06	5.46E-07	1.32	CCF of three components: R21-MOD-CC-1B & R21-MOD-CC-2B & R21-MOD-CC-3A
R21-MOD-CC-INL_2_5	3.33E-05	3.90E-05	2.15	CCF of two components: R21-MOD-CC-1B & R21-MOD-CC-3A
R21-MOD-CC-INL_2_5_6	1.67E-06	5.46E-07	1.32	CCF of three components: R21-MOD-CC-1B & R21-MOD-CC-3A & R21-MOD-CC-3B
R21-MOD-CC-INL_2_6	3.33E-05	1.16E-06	1.03	CCF of two components: R21-MOD-CC-1B & R21-MOD-CC-3B
R21-MOD-CC-INL_3_4	3.33E-05	3.90E-05	2.15	CCF of two components: R21-MOD-CC-2A & R21-MOD-CC-2B
R21-MOD-CC-INL_3_4_5	1.67E-06	5.46E-07	1.32	CCF of three components: R21-MOD-CC-2A & R21-MOD-CC-2B & R21-MOD-CC-3A
R21-MOD-CC-INL_3_4_6	1.67E-06	5.46E-07	1.32	CCF of three components: R21-MOD-CC-2A & R21-MOD-CC-2B & R21-MOD-CC-3B
R21-MOD-CC-INL_3_5	3.33E-05	1.16E-06	1.03	CCF of two components: R21-MOD-CC-2A & R21-MOD-CC-3A
R21-MOD-CC-INL_3_5_6	1.67E-06	5.46E-07	1.32	CCF of three components: R21-MOD-CC-2A & R21-MOD-CC-3A & R21-MOD-CC-3B
R21-MOD-CC-INL_3_6	3.33E-05	3.90E-05	2.15	CCF of two components: R21-MOD-CC-2A & R21-MOD-CC-3B

Table 14.6-5

High Wind Shutdown Importance Measure Report

CDF = 3.95E-08

Event Name	Probability	Fus Ves	RAW	Description
R21-MOD-CC-INL_4_5	3.33E-05	3.90E-05	2.15	CCF of two components: R21-MOD-CC-2B & R21-MOD-CC-3A
R21-MOD-CC-INL_4_5_6	1.67E-06	5.46E-07	1.32	CCF of three components: R21-MOD-CC-2B & R21-MOD-CC-3A & R21-MOD-CC-3B
R21-MOD-CC-INL_4_6	3.33E-05	1.16E-06	1.03	CCF of two components: R21-MOD-CC-2B & R21-MOD-CC-3B
R21-MOD-CC-INL_5_6	3.33E-05	3.90E-05	2.15	CCF of two components: R21-MOD-CC-3A & R21-MOD-CC-3B
R21-MOD-CC-INL_ALL	1.50E-04	2.10E-04	2.39	CCF of all components in group 'R21-MOD-CC-INL'
R21-MP_-FR-ADG_1_2	3.16E-05	2.22E-05	1.69	CCF of two components: R21-MP_-FR-FOADGA & R21-MP_-FR-FOADGB
R21-MP_-FR-FOADGA	6.00E-04	5.97E-05	1.1	MOTOR-DRIVEN PUMP (ALL TYPES) FAILS TO RUN
R21-MP_-FR-FOADGB	6.00E-04	5.60E-05	1.09	MOTOR-DRIVEN PUMP (ALL TYPES) FAILS TO RUN
R21-MP_-FR-FOPUMP_ALL	1.42E-05	1.42E-05	1.98	CCF of all components in group 'R21-MP_-FR-FOPUMP'
R21-MP_-FR-P1A	6.00E-04	2.87E-07	1	MOTOR-DRIVEN PUMP (ALL TYPES) FAILS TO RUN
R21-MP_-FR-P1B	6.00E-04	2.87E-07	1	MOTOR-DRIVEN PUMP (ALL TYPES) FAILS TO RUN
R21-MP_-FR-P2A	6.00E-04	2.87E-07	1	MOTOR-DRIVEN PUMP (ALL TYPES) FAILS TO RUN

Table 14.6-5

High Wind Shutdown Importance Measure Report

CDF = 3.95E-08

Event Name	Probability	Fus Ves	RAW	Description
R21-MP_-FR-P2B	6.00E-04	2.87E-07	1	MOTOR-DRIVEN PUMP (ALL TYPES) FAILS TO RUN
R21-MP_-FS-ADG_1_2	2.22E-04	3.09E-04	2.37	CCF of two components: R21-MP_-FS-FOADGA & R21-MP_-FS-FOADGB
R21-MP_-FS-FOADGA	2.00E-03	3.35E-04	1.16	MOTOR-DRIVEN PUMP (ALL TYPES) FAILS TO START
R21-MP_-FS-FOADGB	2.00E-03	3.09E-04	1.15	MOTOR-DRIVEN PUMP (ALL TYPES) FAILS TO START
R21-MP_-FS-FOPUMP_1_3	3.70E-05	1.32E-06	1.03	CCF of two components: R21-MP_-FS-P1A & R21-MP_-FS-P2A
R21-MP_-FS-FOPUMP_2_4	3.70E-05	1.32E-06	1.03	CCF of two components: R21-MP_-FS-P1B & R21-MP_-FS-P2B
R21-MP_-FS-FOPUMP_ALL	1.00E-04	1.35E-04	2.34	CCF of all components in group 'R21-MP_-FS-FOPUMP'
R21-MP_-FS-P1A	2.00E-03	1.98E-06	1	MOTOR-DRIVEN PUMP (ALL TYPES) FAILS TO START
R21-MP_-FS-P1B	2.00E-03	1.98E-06	1	MOTOR-DRIVEN PUMP (ALL TYPES) FAILS TO START
R21-MP_-FS-P2A	2.00E-03	1.98E-06	1	MOTOR-DRIVEN PUMP (ALL TYPES) FAILS TO START
R21-MP_-FS-P2B	2.00E-03	1.98E-06	1	MOTOR-DRIVEN PUMP (ALL TYPES) FAILS TO START
R21-NSC-TM-ANCA	1.50E-03	4.11E-03	3.71	ADG BUS A IN TEST OR MAINTENANCE

Table 14.6-5

High Wind Shutdown Importance Measure Report

CDF = 3.95E-08

Event Name	Probability	Fus Ves	RAW	Description
R21-NSC-TM-ANCB	1.50E-03	1.53E-04	1.1	ADG BUS B IN TEST OR MAINTENANCE
R21-RE_-FO-ADG_1_2	9.73E-05	1.09E-04	2.1	CCF of two components: R21-RE_-FO-ADGA & R21-RE_-FO-ADGB
R21-RE_-FO-ADGA	8.75E-04	1.04E-04	1.12	ADG-A UNDERVOLTAGE RELAY FAILS TO OPERATE ON DEMAND
R21-RE_-FO-ADGB	8.75E-04	9.73E-05	1.11	ADG-B UNDERVOLTAGE RELAY FAILS TO OPERATE ON DEMAND
R21-TRN-RE-FOADGA	2.42E-02	7.27E-03	1.29	FAILURE TO RESTORE FUEL OIL TRANSFER TRAIN FOR ADG-A
R21-TRN-RE-FOADGB	2.42E-02	6.53E-03	1.26	FAILURE TO RESTORE FUEL OIL TRANSFER TRAIN FOR ADG-A
R21-TRN-RE-FODG1A	2.42E-02	1.12E-04	1	FAILURE TO RESTORE FUEL OIL TRANSFER TRAIN 1 FOR DG-A
R21-TRN-RE-FODG1B	2.42E-02	1.11E-04	1	FAILURE TO RESTORE FUEL OIL TRANSFER TRAIN 1 FOR DG-B
R21-TRN-RE-FODG2A	2.42E-02	1.12E-04	1	FAILURE TO RESTORE FUEL OIL TRANSFER TRAIN 2 FOR DG-A
R21-TRN-RE-FODG2B	2.42E-02	1.11E-04	1	FAILURE TO RESTORE FUEL OIL TRANSFER TRAIN 2 FOR DG-B
R21-UV_-CC-FO_ALL	5.00E-06	2.93E-06	1.58	CCF of all components in group 'R21-UV_-CC-FO'
R21-XHE-FO-ADG	1.61E-02	3.53E-02	3.15	OPERATOR FAILS TO CONTROL THE LOADS ON ANCILLARY DG BUSES

Table 14.6-5

High Wind Shutdown Importance Measure Report

CDF = 3.95E-08

Event Name	Probability	Fus Ves	RAW	Description
R21-XHE-FO-ADGCROSS	1.61E-02	4.91E-03	1.3	OPERATOR FAILS TO CROSS-TIE THE ANCILLARY DG BUSES
T23-POL-RP-SP	7.20E-06	2.79E-03	388.25	SUPPRESSION POOL LEAKS CATASTROPHICALLY
U43-TNK-RP-T1A	3.72E-05	3.85E-05	2.01	PRIMARY TANK 1A FAILS CATASTOPHICALLY
U43-XHE-FO-LPCI	1.61E-03	4.43E-03	3.73	OPERATOR FAILS TO ACTUATE U43 IN LPCI MODE
XXX-XHE-FO-LPMAKEUP	1.61E-02	4.82E-01	30.47	OP. FAILS TO RECOG. NEED FOR LOW PRESS. MAKEUP AFTER DEPRESSURIZATION
XXX-XHE-FO-RPVLDE	1.61E-02	3.40E-05	1	OP. FAILS TO RECOG. OR CHECK THE RPV DECREASING LEVEL

Table 14.6-6

High Wind CET Release Category Frequencies

Release Category	Frequency (per year)[1]
TSL	7.24E-09
FR	2.58E-10
BYP	9.82E-10
BYP (Shutdown)	3.95E-08
OPVB	ε
OPW1	ε
OPW2	2.10E-12
CCIW	3.05E-12
CCID	1.16E-12
EVE	ε
DCH	ε
BOC	2.08E-11

*[1]The frequency is the summed contribution to the release category from all accident classes, as shown in Table 8A-3. BYP is also augmented with frequency from shutdown operations that assume all shutdown core damage sequences are bypass sequences.

**[2]Calculated frequencies less than 1E-12 are reported as "ε

14.7 INSIGHTS

The estimated CDF and LRF for all analyzed scenarios, while using a bounding analysis for most sites, are similar to the internal events results. If site-specific high wind frequencies are estimated to be greater than the frequencies in this analysis, then the COL Applicant would perform a departure analysis and apply the appropriate measures. The shutdown high wind non-TSL frequency is higher than the shutdown internal events non-TSL frequency. However, the shutdown high wind PRA model is developed with significant conservatism, which can be refined following the detailed designs. As an example, during a H345 high wind shutdown event, the Condensate Storage Tank (located in the yard) is failed with no consideration given to aligning an alternate source of water. The failure of the CST during the H345 high wind shutdown events is a major contributor to the shutdown CDF and LRF.

The following insights are generated from the high wind risk analysis:

- The ESBWR is inherently safe with respect to high wind events.
- In Mode 6 Unflooded the containment is open, the reactor vessel is open and the water above the core will not keep the core cool for an extended period of time without additional mitigating systems. It is assumed that there is sufficient time prior to a hurricane strike for the plant to transition to another mode so that long term cooling water is more reliable.

14.8 CONCLUSIONS

The conclusion of the ESBWR high wind risk analysis is that the risk from tornado or hurricane strikes on the plant is acceptably low and meets the NRC goals. The estimated core damage frequency (both at-power and shutdown conditions) from high wind is 4.80E-8/year Note that, due to conservatisms to account for preliminary design information that were applied to these models, the core damage frequency for high wind is not additive to core damage frequencies from other sections.

The ESBWR is inherently safe with respect to high wind events and the plant can be safely shut down at low risk to plant personnel and the general public.

14.9 REFERENCES

14-1 National Oceanic & Atmospheric Administration, U. S. Department of Commerce, August 22, 2007, http://www.spc.noaa.gov/wcm/ONETOR5005.txt.

14-2 ESBWR Design Specification 26A6558, Rev. 3, "General Civil Design Criteria."

14-3 Summit, R.L., Estimation of Core Damage Frequency for Advanced Light Water Reactors Due to Tornado Events (Task 4.3.2.1), Advanced Reactor Severe Accident Program, U.S. Department of Energy, December 1988.

14-4 NUREG/CR-6890, Volume 1, "Reevaluation of Station Blackout Risk at Nuclear Power Plants Analysis of Loss of Offsite Power Events: 1986-2004."

14-5 National Oceanic & Atmospheric Administration, U. S. Department of Commerce, August 22, 2007, http://www.nhc.noaa.gov/pastdec.shtml.

14-6 National Oceanic & Atmospheric Administration, U.S. Department of Commerce, Saffir-Simpson Hurricane Scale, http://www.nhc.noaa.gov/aboutsshs.shtml.

14-7 Enhanced Fujita Scale (EF-Scale), Wind Science and Engineering Center, October 10, 2006, Revision 2.

14-8 NUREG/CR-4461, "Tornado Climatology of the Contiguous United States", Rev. 1.

15 SEISMIC MARGINS ANALYSIS

Table of Contents

15.1 INTRODUCTION 15.1-1
15.2 METHODOLOGY 15.2-1
15.2.1 Assumptions 15.2-1
15.3 SEISMIC FRAGILITIES 15.3-1
15.3.1 Overview 15.3-1
15.3.2 Fragility Formulation 15.3-1
15.3.3 Structural Fragility 15.3-3
15.3.3.1 Reactor Building Complex Structures 15.3-4
15.3.3.2 RCCV and RPV Pedestal 15.3-11
15.3.3.3 RPV Support Brackets 15.3-12
15.3.3.4 Control Building Structure 15.3-13
15.3.3.5 Firewater Service Complex 15.3-13
15.3.4 Component Fragility 15.3-14
15.3.5 Fragility Summary 15.3-14
15.4 ACCIDENT SEQUENCE HCLPF ANALYSIS 15.4-1
At Power Analysis 15.4-1
15.4.1.1 At Power Seismic Event Tree 15.4-1
15.4.1.2 System Analysis 15.4-2
15.4.2 Shutdown Analysis 15.4-4
15.4.2.1 Shutdown Seismic Event Tree 15.4-4
15.4.2.2 System Analysis 15.4-5
15.5 RESULTS 15.5-1
15.6 INSIGHTS 15.6-1
15.7 CONCLUSIONS 15.7-1
15.8 REFERENCES 15.8-1

List of Tables

Table 15-1 Seismic Capacity Summary 15.8-2
Table 15-2 Seismic Fragility for Reactor Building Shear Walls 15.8-3
Table 15-3 Seismic Fragility for Containment Wall 15.8-4
Table 15-4 Seismic Fragility for RPV Pedestal 15.8-5
Table 15-5 Seismic Fragility for RPV Support Brackets 15.8-6
Table 15-6 Seismic Fragility for Control Building 15.8-7
Table 15-7 Seismic Fragility for Firewater Service Complex 15.8-8
Table 15-8 ESBWR Systems and Components/Structures Fragilities 15.8-9
Table 15-9 Seismic Event Tree Nodal HCLPF Equations 15.8-11
Table 15-10 HCLPF Derivation for Figure 15-4a and Figure 15-4b 15.8-12
Table 15-11a HCLPF Derivation for Figure 15-18a, Figure 15-19 and Figure 15-20 ..... 15.8-13
Table 15-11b HCLPF Derivation for ESBWR Shutdown Seismic Event Tree Sequences For Figure 15-18b 15.8-14

List of Figures

Figure 15-1. Typical Fragility Curves 15.8-15
Figure 15-2. ESBWR Horizontal SSE Design Ground Response Spectrum at Foundation Level 15.8-16
Figure 15-3. ESBWR Vertical SSE Design Ground Response Spectrum at Foundation Level 15.8-17
Figure 15-4a. Seismic Event Tree (At Power) 15.8-18
Figure 15-4b. Seismic Induced Break Outside Containment in RWCU Line (At Power) 15.8-19
Figure 15-5. Structural Seismic Fault Tree (At Power) 15.8-20
Figure 15-6. DC Power Seismic Fault Tree 15.8-21
Figure 15-7. SCRAM Seismic Fault Tree 15.8-22
Figure 15-8. SRV Seismic Fault Tree 15.8-23
Figure 15-9. SLCS Seismic Fault Tree 15.8-24
Figure 15-10. IC Seismic Fault Tree 15.8-25
Figure 15-11. DPV Seismic Fault Tree 15.8-26
Figure 15-12. GDCS Seismic Fault Tree 15.8-27
Figure 15-13. VB Seismic Fault Tree 15.8-28
Figure 15-14. PCCS Seismic Fault Tree 15.8-29
Figure 15-15. PI Seismic Fault Tree 15.8-30
Figure 15-16. FPW Seismic Fault Tree 15.8-31
Figure 15-17. Structural Seismic Fault Tree (Shutdown Conditions) 15.8-32
Figure 15-18a. Seismic Event Tree – Shutdown Mode 5 and Mode 5 Open 15.8-33
Figure 15-18b. Seismic Event Tree – Shutdown Mode 5 and Mode 5 Open (Sensitivity) 15.8-34
Figure 15-19. Seismic Event Tree – Shutdown Mode 6 Unflooded 15.8-35
Figure 15-20. Seismic Event Tree – Shutdown Mode 6 Flooded 15.8-36
Figure 15-21. BOC In RWCU Line Fault Tree 15.8-37

15 SEISMIC MARGINS ANALYSIS

This section documents the PRA-based seismic margin analysis of the ESBWR.

15.1 INTRODUCTION

The seismic risk analysis is performed to assess the impacts of seismic events on the safe operation of the ESBWR plant.

A PRA-based Seismic Margins Analysis (SMA) is performed for the ESBWR using the systems models and the fragility analysis method of Ref. 15-1 to calculate High Confidence of a Low Probability of Failure (HCLPF) accelerations for important accident sequences and accident classes. The seismic margin earthquake (SME) for this PRA-based seismic margin assessment is the ESBWR Certified Seismic Design Response Spectrum (CSDRS).

The analysis shows that the ESBWR plant is capable of withstanding an earthquake of at least 1.67 times the Safe Shutdown Earthquake (SSE) with a high confidence of a low probability of failure, where SSE is the ESBWR CSDRS. This demonstration of a 1.67 margin is in compliance with the SECY 93-087 (Ref. 15-14) requirement "*PRA insights will be used to support a margins-type assessment of seismic events. A PRA-based seismic margins analysis will consider sequence-level High Confidence, Low Probability of Failures (HCLPFs) and fragilities for all sequences leading to core damage or containment failures up to approximately one and two-thirds the ground motion acceleration of the Design Basis SSE.*"

The scope of the analysis includes both at-power and shutdown seismic-induced accident scenarios.

15.2 METHODOLOGY

The seismic risk assessment uses a SMA method based on Ref. 15-1 and 15-2 to calculate High Confidence of a Low Probability of Failure (HCLPF) seismic capacities for important accident sequences and accident classes leading to core damage and/or containment failure.

The PRA-based seismic margins approach used in this analysis evaluates the capability of the plant to withstand an earthquake of 1.67 times the Safe Shutdown Earthquake (1.67*SSE).

The analysis involves the following two major steps:

(1) Seismic fragilities

(2) Accident sequence HCLPF analysis

The seismic fragilities of the ESBWR systems, structures, and components are based on generic industry information and ESBWR specific seismic capacity calculations for certain structures.

The MIN-MAX method (Ref. 15-5) is used in the determination of functional and accident sequence fragilities. Per the MIN-MAX method, the overall fragility of a group of inputs combined using OR logic (i.e., seismic event tree nodal fault tree) is determined by the lowest (minimum) HCLPF input. Conversely, per the MIN-MAX method, the overall fragility of a group of inputs combined using AND logic (i.e., seismic event tree sequence) is determined by the highest (maximum) HCLPF input.

Both at-power and shutdown seismic-induced accident scenarios are analyzed.

15.2.1 Assumptions

The SMA is derived based on the following assumptions:

- Structural dimensions and various input factors to the fragility section's formulations are assumed.
- Prior to detailed design information becoming available, minimum values of one and two-thirds times SSE are assumed for components HCLPF values.
- COLA actions are required to verify plant specific HCLPF.
    - As-built engineering walk-down is required to verify assumptions made in SMA.
    - Components may require strengthening if as-built SMA indicates additional capacity margin is required.

15.3 SEISMIC FRAGILITIES

15.3.1 Overview

This subsection presents seismic capacities for selected structures and components that have been identified as potentially important to the seismic risk analysis of the ESBWR standard plant. The seismic capabilities are first estimated in terms of seismic fragilities, from which the HCLPF capacities are then derived. The HCLPF capacities serve as input to the system analysis following the PRA-based seismic margins approach of NUREG/CR-4482 (Ref. 15-5).

The peak ground acceleration of the design earthquake is 0.5g for the SSE. Extensive seismic soil-structure interaction analyses of the reactor/fuel building complex, control building, and firewater service complex were performed for a wide range of generic site conditions under a 0.5g single envelope design spectra. This single envelope design spectra is a composite of Reg. Guide 1.60 spectra anchored to 0.3g and the North Anna ESP design spectra anchored to 0.5g. The analysis results, in terms of site-envelope SSE loads, are presented in Appendix 3A of the ESBWR DCD Tier 2 (Ref. 15-3). The standard plant designed to these site-envelope seismic loads may result in significant design margins when it is situated at a specific site, particularly a soft soil site. Thus, the seismic capacities estimated from the site-envelope design requirements may be very conservative for certain sites; however, confirmation of margins must be done for as-built conditions.

For the seismic category I structures for which seismic design information is available, the seismic fragilities are evaluated using the separation-of-variable method (Ref. 15-1). This approach identifies various conservatisms and associated uncertainties introduced in the seismic design process (both capacity and demand sides) and provides a probabilistic estimate of the earthquake level required to fail a structure or component in a postulated failure mode by extrapolating from the design information supplemented by limited nonlinear analysis to account for building response beyond yielding.

For safety-related components such as pumps, valves, and electrical equipment whose design details are not currently available, a generic HCLPF capacity of 1.67*SSE is assigned. This generic HCLPF is considered to be “reasonably achievable” for the ESBWRs designed to the single envelope design spectra for a wide range of sites.

15.3.2 Fragility Formulation

Seismic fragility of a structure or component is defined herein to be the cumulative conditional probability of its failure as a function of the mean peak ground acceleration (i.e., the average of the peak of the two horizontal components).

The probability model adopted for fragility description is the lognormal distribution. Using a lognormal distribution assumption, an entire family of fragility curves can be fully described in terms of the median ground acceleration and two random variables as:

$$A = A_m \varepsilon_\gamma \varepsilon_\mu \qquad (15.3\text{-}1)$$

Where:

A_m = median peak ground acceleration corresponding to 50% failure probability.

ε_γ = a lognormally distributed random variable accounting for inherent randomness about the median. It is characterized by unit median and logarithmic standard deviation β_γ.

ε_μ = a lognormally distributed random variable accounting for uncertainty in the median value. It is characterized by unit median and logarithmic standard deviation β_μ.

With known values of A_m, β_γ, and β_μ, the failure probability P_f at acceleration less than or equal to a given acceleration "a" can be computed using the following equation for any non-exceedance probability (NEP) level Q.

$$P_f\left(A \le a|Q\right) = \Phi\left[\frac{1}{\beta_\gamma} In\left(\frac{a}{A_m}\right) + \frac{\beta_\mu}{\beta_\gamma}\Phi^{-1}(Q)\right] \tag{15.3-2}$$

Where:

Φ is the standard Gaussian cumulative distribution function.

Figure 15-1 shows a typical family of fragility curves for various NEP levels (for ESBWR specific spectra, see Figure 15-2 and Figure 15-3). The center solid curve represents the median fragility curve at 50% NEP level. The logarithmic standard deviation of the randomness component β_γ determines the curve slope. The logarithmic standard deviation of the uncertainty component β_μ is a measure of the spread from the median curve. The 95th percentile and 5th percentile curves in Figure 15-1 are the upper and lower bounds of the failure probability for a given acceleration, corresponding to 95% and 5% NEP levels, respectively.

When only the point estimate is of interest, which is the case for this analysis, the total variability about the median value is taken to be the square root of the sum of the squares (SRSS) of the inherent randomness and uncertainty components.

$$\beta_c = \sqrt{\beta_\gamma^2 + \beta_\mu^2} \tag{15.3-3}$$

The fragility curve corresponding to the median value A_m with associated composite logarithmic standard deviation can be computed by the following equation:

$$P_f\left(A \le a\right) = \Phi\left[\frac{1}{\beta_c}\ln\left(\frac{a}{A_m}\right)\right] \tag{15.3-4}$$

This composite fragility curve is also called the mean fragility curve and is shown as the dashed curve in Figure 15-1 for illustration. It represents the best estimate fragility description.

In estimating the median ground acceleration capacity and the associated variability, an intermediate variable defined as safety factor F is utilized. The safety factor is related to the median ground acceleration capacity by the following relationship.

$$A_m = FA_d \tag{15.3-5}$$

Where:

A_d is the ground acceleration of the reference design earthquake to which the structure or component is designed.

A key step in the seismic fragility estimate thus involves the evaluation of the factor of safety associated with the design for each important potential failure mode. The design margins inherent in the component capacity and the dynamic response to the specific acceleration are the two basic considerations. Each of the capacity and response margins involves several variables, and each variable has a median factor of safety and variability associated with it. The overall factor of safety F is the product of the factor of safety for each variable F_i.

$$F = \prod_i F_i \tag{15.3-6}$$

The overall composite logarithmic standard deviation is SRSS of the composite logarithmic standard deviations in the individual factors of safety.

$$\beta_c = \sqrt{\sum_i \beta_{ci}^2} \tag{15.3-7}$$

Knowing the median peak ground acceleration (A_m) and the associated logarithmic standard deviation (β_c); the HCLPF capacity is obtained using the equation below.

$$\text{HCLPF} = A_m \exp(-2.326\beta_c) \tag{15.3-7a}$$

15.3.3 Structural Fragility

The plant structures are divided into two categories according to their function and the degree of integrity required to protect the public during a seismic event. These categories are seismic category I and non-category I. Seismic category I includes those structures whose failure might cause or increase the severity of an accident, which would endanger the public health and safety. The non-category I structures are those structures which are important to reactor operation, but are not essential for preventing an accident which would endanger the public health and safety, and are not essential for the mitigation of the consequences of these accidents. One example is the turbine building structure.

For the purpose of this study, structures are considered to fail functionally when inelastic deformations of the structure under seismic load increase to the extent that the operability of the safety-related components attached to the structure cannot be assured. The drift limits chosen for structures are estimated as corresponding to the onset of significant structural damage. For many potential modes of failure, drift limits represent a conservative bound on the level of inelastic structural deformation that might interfere with the function of the system housed within the structure.

The potential of seismic-induced soil failure such as liquefaction, differential settlement, or slope instability is highly site dependent and cannot be assessed for generic site conditions. It is assumed in this analysis that there is no soil failure potential in the range of ground motions considered.

Building-to-building impact due to differential building displacements under strong earthquakes is deemed not credible since a sufficient distance to avoid impact separates adjacent buildings. Differential building displacements of sufficient magnitude could, however, potentially result in damage to interconnecting piping, depending on system configuration and sliding resistance of building foundation. A detailed evaluation of seismic capacities of interconnecting systems

against differential building displacement cannot be made due to lack of design details and specific site conditions. It is assumed that the mode of failure due to differential building displacement has a capacity no less than the required margin of 1.67*SSE. This assumption is to be subsequently verified by the COL applicant.

15.3.3.1 Reactor Building Complex Structures

Detailed fragility evaluations were made for the following structures in the Reactor Building (RB) and Fuel Building (FB) complex. The RB and FB share the same basement and are fully integrated. The term "Reactor Building" when mentioned hereafter also includes the structures of the Fuel Building. As for the containment structure, it is enclosed by and integrated into the RB. The following failure modes were evaluated as part of the RB and FB capacity evaluation.

- Reactor Building shear walls
- Containment wall (upper drywell and wetwell)
- RPV pedestal (same as lower drywell wall)
- RPV support brackets

Those structures were evaluated according to the approach outlined previously and using various safety factors as presented below.

The factor of safety for a structure against a specific failure mode is the product of the capacity factor F_c and structural response factor F_{rs};

$$F = F_c F_{rs} \tag{15.3-8}$$

The individual factors, the capacity factor and the response factor, are discussed in the following subsections.

15.3.3.1.1 Capacity Factor (F_c)

The capacity factor represents the capability of a structure to withstand seismic excitation in excess of the design earthquake. This factor is composed of two parts:

$$F_c = F_s F_u \tag{15.3-9}$$

Where:

F_s = the ultimate structural strength margin above the design SSE load, and

F_u = the inelastic energy absorption factor accounting for additional capacity of the structure to undergo inelastic deformations beyond yield.

The capacity estimated by this approach is the elastic capacity equivalent to the actual nonlinear behavior under strong motion earthquakes.

Strength Factor (F_s)

The strength factor associated with seismic load can be calculated using the following equation.

$$F_s = \frac{P_u - P_n}{P_s} \tag{15.3-10}$$

Where:

P_u = the median ultimate strength,

P_n = the normal operating loads, and

P_s = the design SSE load.

The earthquake-resistant structural elements of the reactor building are reinforced concrete shear walls that are integrated with the reinforced concrete cylindrical containment through concrete floor slabs. The specified compressive strength of concrete is 34.5 MPa for the building and 27.6 MPa for the basemat. The specified minimum yield strength of ASTM A615, Grade 60 reinforcing steel is 414 MPa. These are design values; the actual material strengths are higher.

Concrete compressive strength used for design is normally specified as a value at a specific time after mixing (28 or 90 days). This value is verified by laboratory testing of mix samples. The strength must meet specified values, allowing a finite number of failures per number of trials. There are two major factors that affect the actual strength:

- To meet the design specifications, the contractor attempts to create a mix that has an "average" strength somewhat above the design strength, and
- As concrete ages, it increases in strength.

Taking those two elements into consideration, the actual compressive strength of aged concrete is commonly 1.3 times the design strength (Ref. 15-8). The total logarithmic standard deviation about the median compressive strength is conservatively estimated to be 0.15.

For A615, Grade 60 steel, a ratio of 1.1 with a logarithmic standard deviation of 0.09 (Ref. 15-9) is used for the fragility calculation.

The reactor building shear wall is chosen as an example for the discussion of the strength factor evaluation. For reinforced concrete shear walls the median ultimate shear strength can be computed using the following equation (Ref. 15-1).

$$v_u = v_c + v_s$$

$$= 8.3\sqrt{f'_c} - 3.4\sqrt{f'_c}\left(\frac{h}{w} - \frac{1}{2}\right) + \frac{N}{4wt} + \rho_{se} f_y \tag{15.3-11}$$

Where:

v_u = ultimate shear strength (psi)

v_c = shear strength provided by concrete (psi)

v_s = shear strength provided by reinforcing steel (psi)

f'_c = concrete compressive strength (psi)

h = effective wall height (in)

w = wall length (in)

N = axial load (lb)

f_y = yield strength of reinforcing steel (psi)

t = wall thickness (in)

ρ_{se} = $A\rho_v + B\rho_h$

ρ_h = horizontal steel reinforcement ratio

ρ_v = vertical steel reinforcement ratio

A & B = constants depending on h/w:

	A	**B**
$h/w \leq 0.5$	1	0
$0.5 < h/w \leq 1.5$	1.5-h/w	h/w-0.5
$1.5 < h/w$	0	1

In computing ultimate shear strength with this equation, the median material strengths of the concrete and reinforcing steel defined above are used.

The strength factor F_s is then calculated using Equation 15.3-10 for each of the levels of the reactor building shear walls. The normal operating loads that do not result in lateral force and horizontal loads induced by SRV actuations are found to be negligible compared to the SSE-induced horizontal loads. Therefore, the strength factor is the ratio of the median shear strength to the design SSE shear. The lowest strength factor is found to be 1.77. This is calculated for the fixed-base site condition. It is to be noted that though the fixed-base SSE response is lower than the enveloping case (i.e., medium soil stiffness half space site condition), its medium seismic capacity is actually lower when conservatisms in the structural response factors are considered. The associated logarithmic standard deviation is calculated to be 0.04 using the second moment approximation (Ref. 15-10) accounting for both concrete and reinforcing steel material strength variability. There is also an uncertainty associated with Equation 15.3-11 since it is an approximate model fit to data. The modeling uncertainty is 0.20 expressed in terms of logarithmic standard deviation (Ref. 15-1). The total composite logarithmic standard deviation in the median strength factor is 0.20, which is the SRSS value of 0.04 for the material strength uncertainty and 0.20 for the equation uncertainty. Flexural failure of the wall is found to have higher strength factor, therefore, shear failure is the governing mode of failure.

Inelastic Energy Absorption Factor (F_u)

The inelastic energy absorption factor (F_u) accounts for the fact that an earthquake represents a limited energy source and many structures are capable of absorbing substantial amounts of energy beyond yield without loss of function. The parameter commonly used to measure the energy absorption capacity in the inelastic range is the system ductility, μ_{sys}. It is defined as the ratio of the summation of the product of each story weight and median displacement at ultimate

capacity to the summation of the product of each story weight and story displacement at yielding of the critical story as shown below (Ref. 15-1):

$$\mu_{sys} = \frac{\sum W_i \cdot \delta_{Ti}}{\sum W_i \cdot \delta_{ei}} \quad (15.3\text{-}12)$$

Where:

W_i = weight of each story

δ_{Ti} = median maximum deflection of each story at ultimate capacity

δ_{ei} = median elastic deflection of each story scaled to reach yield in the critical story

A story drift of 0.5% is used to estimate the deflection profile at failure of the governing shear wall. Once the median system ductility is calculated, the median inelastic energy absorption factor is calculated using two different procedures, i.e., the Effective Frequency/Effective Damping Method and the Effective Riddell-Newmark Method (Ref. 15-1) and the average value is the median inelastic energy absorption factor of the structure.

A median damping value of 7% of critical is conservatively assumed in the inelastic energy absorption factor calculation. This is to avoid double-counting of energy dissipation due to hysteresis damping and inelastic response of the building.

The inelastic energy absorption factor of the Reactor Building shear wall is calculated to be 2.07. The associated randomness and uncertainty logarithmic standard deviations are 0.07 and 0.14, respectively determined from using the lower bound story drift of 0.36% (Table 3-5 of Ref. 15-1).

15.3.3.1.2 Structural Response Factor (F_{RS})

The structural response factor (F_{RS}) consists of a number of factors or parameters introduced in the calculation of structural response in the seismic dynamic analysis. Response calculations performed in the design analysis utilized conservative deterministic parameters. The actual response may differ significantly from the calculated response for a given peak ground acceleration level since many of these parameters are random. The structural response factor is evaluated as the product of the following factors that are considered to have the most influence on the structural response.

$$F_{RS} = F_{GM}F_{D}F_{SSI}F_{M}F_{MC}F_{ECC} \quad (15.3\text{-}13)$$

Where:

F_{GM} = ground motion factor accounting for the margin of the single envelope design ground response spectra and conservative or unconservative bias in the treatment of horizontal direction peak response and vertical component response.

F_{D} = damping factor accounting for the variability in response due to difference in expected damping at failure and damping used in the analysis,

F_{SSI} = soil-structure interaction factor accounting for the variability associated with SSI effects on structural response,

F_M = structural modeling factor accounting for the variability in response due to modeling assumptions,

F_{MC} = modal response combination factor accounting for the variability in response due to the method used in combining modal responses,

F_{ECC} = earthquake component combination factor accounting for the variability in response due to the method used in combining the earthquake components.

- Ground Motion Factor (F_{GM})

Three factors are considered under the ground motion factor, i.e., Spectral Shape Factor (F_{SA}), Horizontal Direction Peak Response (F_{HD}), and Vertical Component Response (F_V) as presented in this section.

  - Spectral Shape Factor (F_{SA})

The spectral shape factor is typically used to account for conservatism between the SSE design ground response spectrum and the site-specific design ground response spectrum at the dominant building frequencies. The ground response spectrum considered in the seismic design is the envelope of the 0.3g Regulatory Guide (RG) 1.60 site-independent ground spectra and the 0.5g North Anna ESP site-specific performance-based design ground spectra. The resulting single envelope horizontal and vertical design spectra are anchored to 0.5g peak ground acceleration as shown in Figures 15-2 and 15-3. The broad-band SSE ground response spectra are referred to as certified seismic design response spectra (CSDRS) in Regulatory Guide 1.208 (Ref. 15-13). In SECY-93-087 (Ref. 15-14), the USNRC approves the staff recommendation that a PRA-based seismic margin analysis will consider sequence level HCLPF (High Confidence of Low Probability of Failure) capacity and fragilities for all sequences leading to core damage or containment failures up to approximately one and two-thirds (1.67) the ground motion acceleration of the Design Basis SSE. For certified design the Design Basis SSE is the Certified Seismic Design Response Spectrum (CSDRS) and generic sites are considered. Hence, to demonstrate seismic margin for the standard design only the CSDRS is considered in the fragility evaluations. Therefore the spectral shape factor is:

$$F_{SA} = 1.0. \tag{15.3-14}$$

Since the conservatively defined CSDRS is used, no logarithmic standard deviation of randomness or uncertainty is assigned to the median spectral shape factor of safety.

  - Horizontal Direction Peak Response (F_{HD})

The ground motion parameter (e.g., peak ground acceleration) is the average of the two horizontal directions. Thus, the ground motion in one direction may be higher than that in the perpendicular direction. For a box-type structure such as the Reactor Building, seismic demand of a major shear wall is affected primarily by one directional horizontal response. The effect of earthquake in the perpendicular direction is insignificant. Since an average parameter is used, the real response could be either higher or lower, hence no bias either way. Thus,

$$F_{HD} = 1.0. \tag{15.3-15}$$

The associated randomness and uncertainty are 0.13 and 0, respectively (Ref. 15-1, Table 3-2).

- Vertical Component Response (F_V)

The vertical component of the ESBWR single envelope design spectra follows the Reg. Guide 1.60 vertical spectrum from 0.1 Hz up to 10 Hz and follows the North Anna performance-based design spectra above 10 Hz. This is conservative in comparison to the case where vertical component ground motion is assumed to be 2/3 of the horizontal component. Though relatively large randomness and uncertainty variability are associated with the vertical component (Table 3-2 of Ref. 15-1), because of the small effect the vertical component has on the governing failure mode of the building (i.e., shear wall failure), they are significantly diminished in the final fragility parameters. Therefore, the vertical component response factor is given as

$$F_V = 1. \tag{15.3-16}$$

The associated randomness logarithmic standard deviation is 0.10. Therefore, the overall ground motion factor of safety is 1.0 (= 1.0*1.0*1.0) and the overall randomness is 0.16 by combining the randomness of spectral shape, horizontal direction peak response, and vertical component response per Equation 15.3-7.

- Damping Factor (F_D)

For reinforced concrete structures the damping ratio considered in the SSE analysis is 7%. The realistic values when the stress is at or near yield range from 7% to 10% (Ref. 15-1). The upper bound value is considered to be the median and the lower bound corresponds to the 84th percentile level.

Thus, a factor of safety of 1.2 is calculated using the 7% and 10% damped CSDRS spectral accelerations at the fixed-base reactor building fundamental frequency of 4 Hz.

$$F_D = 1.2 \tag{15.3-17}$$

The associated logarithmic standard deviation can be estimated using the ratio of the spectral acceleration at 84th percentile damping (7% of critical) to the spectral acceleration at median damping (10% of critical) as shown below:

$$ß_c = \ln (SA_{7\%} / SA_{10\%}) \tag{15.3-18}$$

The uncertainty logarithmic standard deviation is 0.18.

- Soil-Structure Interaction Factor (F_{SSI})

The factor of safety of soil-structure interaction between the reactor building and the supporting media includes the following considerations:

- Ground motion incoherence (F_{GMI}),
- Vertical spatial variation of ground motion (F_{VSV}), and
- SSI analysis (F_{SSI})

The dominant frequency of the fixed-base case of the reactor building is 4 Hz. At this frequency the ground motion incoherence effects is insignificant, such that, F_{GMI} = 1.0 and has no associated variability.

The vertical spatial variation factor accounts for conservative bias in the SSI analysis that arises from choice of location of the control motion. The ground motion at the surface level in the free

field decreases with depth of embedment. The ESBWR single envelope design ground spectra are defined as the outcrop motion at the foundation level of the reactor building for all site conditions. This conservative bias may be quantified if the surface ground motion is deconvoluted from the finished grade to the foundation level. Due to lack of this information, the embedment effect is estimated as discussed below.

The SSE design ground motion is defined as free-field outcrop spectra at the foundation level of the reactor building which has an embedment depth of 20.15 m. In the seismic response analyses of the generic uniform half space sites including the fixed base, the nuclear island is assumed to be surface founded without consideration of the embedment. This potentially could lead to very significant conservatism in the calculated responses, especially for soil sites. For rock sites, neglecting the embedment effects would also lead to conservative response predictions, though to a lesser extent. This so-called kinematic interaction has a significant effect on the foundation input motion generally reducing the translational motion of the foundation and increasing the rotational motion.

For ESBWR, the kinematic effects can be a very significant effect for the uniform site conditions of soil and rock. The reason is that the CSDRS spectra are broad-band and represent envelope of potential ground motions for the generic site conditions identified. These response spectra shapes are more applicable to the site free surface at top of the grade. Hence, assuming these apply at foundation level adds conservatism to the calculated responses. Given that the RBFB has an embedment depth of 20.15 m, a factor of safety of 1.2 is estimated with conservative bias.

No reduction due to embedment is estimated at three standard deviations from the median case. Based on this the associated uncertainty variability is calculated to be 0.06. The randomness variability is estimated to be 0.08 (Ref. 15-1).

The final SSI factor of safety is 1.2 (= 1.2*1.0*1.0) and the associated randomness and uncertainty variability are 0.08 and 0.06, respectively.

- Modeling Factor (F_M)

The reactor building structural model considered in the seismic design analysis is a multi-degree-of-freedom system constructed according to common modeling techniques and the Standard Review Plan (SRP) requirements in terms of number of degrees of freedom and subsystem decoupling. The model is thus considered to be best-estimate and the resulting dynamic characteristics to be median-centered. Thus, the modeling factor is unity. Uncertainty in the modeling has effects on the mode shapes and modal frequencies of the structure. The logarithmic standard deviation of frequency uncertainty is estimated to be 0.15 based on a review of the mathematical model of the reactor building and the recommendation in Ref. 15—1. The upper and lower bound frequencies of the fixed base reactor building are 4.65 Hz (4 Hz * $e^{0.15}$) and 3.44 Hz (4 Hz * $e^{-0.15}$), respectively. The corresponding 5% damped spectral accelerations are 0.9g and 0.86g. The uncertainty in the seismic response due to frequency uncertainty is calculated to be 0.02 (= ln(0.9g/0.88g) where 0.88g is the 5% damped spectral acceleration at the best-estimate frequency of 4 Hz). The uncertainty associated with the mode shape is 0.15 (Ref. 15—1). Thus, the logarithmic standard deviation of uncertainty in modeling is 0.15 (= $(0.02^2 + 0.15^2)^{1/2}$).

- Modal Response Combination Factor (F_{MC})

The method used in the seismic response analysis of the fixed-base case is the time history method solved by direct integrations. The phasing between individual modal responses is known and the total response is the algebraic sum of all modes of interest. The maximum response is thus precise and the modal response combination factor (F_{MC}) is unity. The associated uncertainties are less than the uncertainties associated with the response spectrum method, in which the maximum modal responses are combined by the SRSS method. A value of 0.15 is assigned to the logarithmic standard deviation of randomness to account for different modal phasing that would result from different time histories (Ref. 15—1).

- Earthquake Component Combination Factor (F_{ECC})

The effects of multi-directional earthquake excitation on structural response depend on the geometry, dynamic response characteristics, and relative magnitudes of the two horizontal and the vertical earthquake components. The design method to combine the contributions from different earthquake components is SRSS or 100-40-40. Either method is considered to result in a median-centered response. Thus, the earthquake component combination factor is 1.0.

The reactor building walls are designed to resist in-plane loads. The walls mainly respond to the horizontal motion parallel to the walls. The vertical loads on the walls due to the vertical excitation are typically less significant in contributing to the total stresses and there is an equal probability of acting upward or downward. The earthquake component combination effect on the wall design is thus not significant and a small logarithmic standard deviation of 0.05 is estimated.

15.3.3.1.3 Fragility Results for Reactor Building Complex

The result of the fragility analysis for the identified reactor building failure mode is summarized in Table 15-2. The overall safety factor is the product of the individual factors. The total logarithmic standard deviation is the SRSS value of the individual logarithmic standard deviations. The seismic fragility, in terms of median ground acceleration, is the product of the overall factor and the SSE design ground acceleration of 0.5g. The HCLPF calculated in accordance with Equation 15.3-7a is presented at the bottom of the table.

15.3.3.2 RCCV and RPV Pedestal

Other major structures inside the reactor building are the reinforced concrete containment vessel (RCCV) and the Reactor Pressure Vessel (RPV) pedestal. The pedestal is part of the RCCV pressure boundary. Both the RCCV and the pedestal are reinforced concrete cylindrical structures interconnected to the reactor building via walls and slabs which respond to the seismic input motion as an integral unit.

The governing failure mode of the RCCV is shear failure of the RCCV wall. The critical location is determined by calculating the ratio of capacity to demand at different locations of the containment wall. The median shear capacity of the cylindrical wall is based on the equations in Appendix N of Ref. 15-2 that are developed from a considerable amount of testing conducted in Japan on scale models of reinforced and prestressed concrete containment structures. The equation is as shown below:

$$v_u = 0.8\sqrt{f_{c_m}} + \rho\sigma_y \le 21.1\sqrt{f_{c_m}} \tag{15.3-19}$$

Where f_{c_m} is the median compressive strength of concrete of the containment wall (psi)

σ_y is the median yield strength of containment wall reinforcing steel (psi)

ρ is the effective reinforcing steel ratio of the containment wall.

The median shear capacity of the cylindrical wall is

$$V_u = \frac{v_u \cdot \pi \cdot D \cdot t_w}{\alpha} \tag{15.3-20}$$

Where D is mean diameter of the cylindrical wall

t_w is thickness of the containment wall

α is a factor to convert the cross section area into effective shear area

$$\begin{aligned} \alpha &= 2.0 \text{ if } \frac{M}{V \cdot D_0} \le 0.5 \\ &= 0.667 \cdot \left(\frac{M}{V \cdot D_0}\right) + 1.67 \text{ if } 0.5 \le \frac{M}{V \cdot D_0} \le 1.25 \\ &= 2.5 \text{ otherwise} \end{aligned} \tag{15.3-21}$$

Where M and V are overturning moment and story shear at the section where median capacity is calculated.

The flexural strength of the cylindrical wall is found to have a higher factor of safety than that of shear. The other factors of safety are calculated similar to that of reactor building. The median seismic capacity of the RCCV is 3.16g peak ground acceleration (pga) with an associated combined logarithmic standard deviation of 0.41. The HCLPF capacity is 1.20g pga. The summary table of the RCCV fragility is presented in Table 15-3.

The RPV pedestal is a thick-walled cylinder based on its geometry. The governing failure mode is tangential shear near the base. Flexural failure does not govern. The formula used for calculating the median shear strength of the pedestal is developed based on test data (Ref. 15-18). The median seismic capacity of the RPV pedestal is 3.34g peak ground acceleration (pga) with an associated combined logarithmic standard deviation of 0.44. The HCLPF capacity is 1.21g pga. The summary table of RPV pedestal fragility is presented in Table 15-4.

15.3.3.3 RPV Support Brackets

The eight RPV support brackets are located at the junction of the RPV pedestal and the vent wall structure. The brackets are made of structural steel and provide structural support to the RPV as well as the Reactor Shield Wall (RSW).

The structural integrity analysis of the RPV support bracket is documented in DCD Tier 2 Appendix 3G, including the calculated stresses of normal, severe, extreme, abnormal, and abnormal extreme conditions of the RPV support brackets. The most severe case of stresses in the RPV brackets is identified to be the 150 mm thick horizontal plate in shear. Anchorage of the brackets to the pedestal wall is found to have higher strength factor than the horizontal plate

of the bracket. The median shear yield strength of the plate material (i.e., A516 Grade 70) is used to calculate a median strength factor of 4.68. The inelastic energy absorption factor is unity since failure of the bracket is considered to be localized.

The maximum enveloping seismic forces acting on the support brackets are from seismic response of the fixed base model with in-fill concrete stiffness of vent wall and diaphragm floor. The fundamental frequency of the RPV of the fixed base model is estimated at 12 Hz. A ground motion incoherence factor of safety of 1.15 is calculated using the approach in Ref. 15-1. The median seismic capacity of the RPV support brackets is 3.22g pga with an associated combined logarithmic standard deviation of 0.33. The HCLPF capacity is 1.49g pga. The summary table of RPV support bracket fragility is presented in Table 15-5.

15.3.3.4 Control Building Structure

The control building is a reinforced concrete box type structure with overall dimensions of 30.3 m by 23.8 m by 21.2 m above the basemat. The embedment depth of the building is 15 m. Its seismic fragility is evaluated using the same procedure described above for the reactor building. The effects of concurrent out-of-plane loads of the at-rest soil pressure, hydrostatic pressure, and dynamic soil pressure acting on the shear wall are accounted for in the strength factor calculation by reducing the yield strength of the wall reinforcing steel. The controlling mode of failure is found to be shear failure of the exterior walls. Table 15-6 presents the margin in each of the capacity and response factors. The resulting median seismic capacity is 3.28g pga with a logarithmic standard deviation of 0.48. The HCLPF capacity of the control building is 1.07g.

15.3.3.5 Firewater Service Complex

The firewater service complex (FWSC) is a surface-founded reinforced concrete structure consisted of a single-story fire pump enclosure (FPE) located between two upright cylindrical firewater storage tanks (FWS). The FPE and the two tanks are supported on a common basemat which dimensions of 52 m long by 20 m wide by 2.5 m thick. There are three shear keys at the bottom face of the basemat to prevent sliding of the entire firewater service complex. Two 20-m long shear keys are oriented in the short direction of the basemat (EW shear key) and one 52-m long shear key is oriented in the north-south direction (NS shear key). Each shear key is 2 m thick by 3 m deep. The reinforced concrete firewater tank has an outside diameter of 17.5 m and a wall thickness of 1 m. Each tank has a water storage capacity of 550,000 gallons.

The median strength factors of the FPE, the FWS tanks, and the shear key are calculated to be 7.9, 4.1, and 4.7, respectively based on the SSE response of the fixed-base case. The median seismic capacity of the FWS tank is higher than that of the shear keys when the inelastic energy absorption capacity of the tank wall is considered. Thus, the governing failure mode of the FWSC is that of the EW shear keys. Since no shear ties are provided to the EW shear keys, this failure mode is brittle as such the inelastic energy absorption factor is unity. The ground motion incoherence factor of safety of the FWSC is calculated to be 1.13 using the approach in Ref. 15-1. The resulting median seismic capacity of the FWSC is 3.19g pga with a combined logarithmic standard deviation of 0.38. The HCLPF capacity of the FWSC is 1.32g. The summary table of the FWSC seismic fragility is presented in Table 15-7.

15.3.4 Component Fragility

The overall approach for determining HCLPF capacities of equipment and components qualified by seismic testing and analysis is described in EPRI TR-103959 (Ref. 15-1). Since the detailed design information on the equipment is not available at this time, generic HCLPF capacities of 1.67*SSE (0.84g) are assigned. These generic HCLPF capacities assumed for equipment and components are considered achievable because of the margins or safety factors introduced at different stages of equipment design and qualification. Equipment qualified for application in GE ESBWR plants has additional seismic margins in high frequencies due to design consideration of high-frequency hydrodynamic loads in combination with seismic loads. The other sources of margin are from conservatism in the ESBWR seismic response analysis, e.g., use of single enveloping design spectra and conservative treatment of soil-structure interaction and the use of enveloping responses of all site conditions for design.

The equipment and components of the GE ESBWR plant will be qualified to the required floor response spectra arising from the single envelope ground motion input rich in both low and high frequencies and following the ASCE, ASME and IPEEE Standards, their seismic HCLPF capacities should be able to meet the required value of 1.67 times 0.5g peak ground acceleration. In the event that the required margin is not met, the Required Response Spectra (RRS) will be appropriately factored throughout the frequency range to assure that the HCLPF margin of 1.67 will be achieved. This factoring will be determined before specifying RRS for equipment qualification and can be done on a generic basis based on conservatism in the in-structure response spectra and on the examination of the systems models.

15.3.5 Fragility Summary

The structural seismic fragilities and corresponding HCLPF values of the Reactor Building, the RCCV, the RPV pedestal, the RPV support brackets, the Control Building, and the Firewater Service Complex are summarized in Table 15-1. All have HCLPF seismic capacities greater than 1.67 times the SSE.

15.4 ACCIDENT SEQUENCE HCLPF ANALYSIS

An event tree structure is used in the ESBWR seismic margin analyses to illustrate the accident sequences analyzed in the analysis. This event tree structure is shown in Figure 15-4a and Figure 15-4b for at power and Figure 15-17 through Figure 15-20 for shutdown.

The seismic event tree is used to identify those structures and components requiring seismic capacity analysis (refer to Subsection 15.3), and to identify the HCLPFs of individual seismic-induced accident sequences.

If a system, S, (or sequence) contains two components (A, B) combined with OR logic, the failure of any component will fail the system (S = A + B), and the cumulative fragility distribution of the system is governed by the fragility distribution of the weakest component. This principle is applied to the system fault trees, which generally are comprised of OR gates.

If two elements operate in AND logic, only the failure of both components will fail the system (S = A * B), and the cumulative fragility distribution of the system is governed by the fragility distribution of the most seismically rugged component. This principle is applied to accident sequences, which are composed of AND elements.

The scope of this analysis includes both at-power and shutdown seismic-induced accident scenarios. The seismic accident analysis for the at-power condition is discussed below in Section 15.4.1, and the analysis for the shutdown condition is discussed in Subsection 15.4.2.

15.4.1 At Power Analysis

15.4.1.1 At Power Seismic Event Tree

The seismic event tree is shown in Figure 15-4a and Figure 15-4b. The associated top events are shown in Table 15-9 and the associated sequence capacity derivations are shown in Table 15-10. The HCLPF fragility information input into each event tree node is obtained from the fragility analysis summarized in Subsection 15.3. The HCLPF inputs as a function of event tree node are summarized in Table 15-8.

The event tree begins with the spectrum of seismic events, considers whether or not seismic-induced structural failure (node SI) occurs, and whether or not emergency DC power is lost. For seismic induced break outside containment in RWCU line, as shown in Figure 15-4b, a node for isolation of the RWCU line is added before the DC node to account for manual valve isolation. Loss of either structural integrity or DC power results in core damage. Thus, all remaining accident sequences in Figure 15-4a and Figure 15-4b are for cases of no structural failure and DC power available.

The success or failure of node DC (emergency DC power) is evaluated in Figure 15-4a and Figure 15-4b to account for support system dependencies. Failure of all DC power results in a high-pressure core melt due to loss of all control, loss of isolation condensers, and failure to depressurize the reactor.

In event of successful emergency DC, the next node questions whether or not seismic-induced failure to scram (node SCRAM) occurs. In the event of an ATWS, sufficient safety relief valves must open to prevent RPV failure due to overpressure. Failure of a sufficient number of safety

relief valves to open is assumed to lead to a core damage condition due to the potential impact to boron injection effectiveness.

If the SRVs function properly, the next node questions the actuation of the Standby Liquid Control (SLCS) system. Seismic-induced failure of SLCS leads to a core damage condition.

For sequences with failure to scram (SCRAM node failure) but successful SLCS initiation,heat removal can be achieved via the Isolation Condenser System (ICS) once the reactor is subcritical and all SRVs are closed. No credit is given to the actuation of the Passive Containment Cooling System (PCCS) because of the impact on boron injection effectiveness. Failure of the Isolation Condenser after SLCS leads to a core damage condition.

To extend Isolation Condensers performance well beyond 24 hours, communication between the isolation condenser pools and the PCCS pools must be established. As an alternative to this action, water from a fire protection diesel driven pump may be aligned.

The successful condition of the Scram function (SCRAM node success) leads to another group of sequences. In this group, actuation of the SRVs is also required for initial pressure control. Additional RPV depressurization using the DPVs is required to allow low pressure injection. These valves discharge to the drywell and after their actuation, the Gravity Driven Cooling system (GDCS) is required to provide water to keep the core covered and to compensate for the water losses due to steam discharge to the drywell. Failure of either function will lead to core damage.

Heat removal from the drywell is achieved through the actuation of the PCCS, a fully passive system that condenses the steam and drives the water back to the GDCS pools. In order to ensure that non-condensable gases cannot prevent steam circulation through PCCS heat exchangers, it is necessary that the non-condensables be directed to the wetwell. In order to facilitate this process, wetwell pressure must be lower than drywell pressure. All vacuum breakers that separate the drywell from the wetwell must all be closed to prevent equalizing the wetwell and drywell pressure. It is considered that the failure of one vacuum breaker would prevent the successful operation of the PCCS and consequently would lead to core damage.

Whether heat removal is initially provided by either the isolation condensers (ATWS sequences) or the PCCS (non-ATWS sequences), long term heat removal success requires that the isolation condensers pool be communicated with the PCCS pools. As an alternative to this action, water from a fire protection diesel driven pump may be aligned.

15.4.1.2 System Analysis

The seismic fault trees contain only those components that might be subject to seismic failure. One of the important ground rules of the seismic margin analysis is that all like components in a system always fail together.

The passive safety systems credited in the analysis have just a few active components (valves), all with automatic actuation and none with reliance on human action that might represent a single failure dominating the overall system reliability. Human actions are required only in the long term and as such, given the low likelihood of failure for operator actions with very long allowable time windows, human action errors do not dominate system failure. Random failures are assumed to be non-significant contributors to seismic risk (consistent with past industry seismic studies) and are not explicitly included in this analysis.

Structure failures judged to contribute to seismic core damage are shown on Figure 15-5. In this analysis, any one or more of these structural failures are assumed to result in core damage. The structures having the lowest seismic capacity are the reactor building and control building.

Most of the systems credited in the event tree are passive systems. The passive concept means that these systems do not require AC power supply for their actuation. However, DC power supply is required for a number of functions in those systems. The PCCS system is the only fully passive system. These systems require that depressurization valves actuate, as well as the GDCS, and have dependency on DC power. As such, the DC power supply is considered separately in the seismic event tree. The most critical components in the DC system are the batteries and cable trays that distribute cables associated with DC distribution. Motor control centers are also included, representing the panels that distribute DC and vital AC power to different loads. The seismic fault tree for DC power is shown in Figure 15-6.

The reactor protection system, control rod drive system, and alternate rod insertion system are not modeled because the failure of control rods to insert is dominated by the relatively low seismic fragility of the fuel assemblies, control rod guide tubes, and housings. The seismic fault tree for reactivity control is shown in Figure 15-7. The fuel assemblies are the most fragile component.

The seismic fault tree for safety relief valves, Figure 15-8, models the possible failures of the SRVs themselves. The seismic fault tree for SLCS is shown in Figure 15-9.

The seismic fault tree for the isolation condensers is shown in Figure 15-10. Heat exchanger failure is the most significant seismic-induced component failure Failures of nitrogen and motor operated valves, and piping are also included.

The seismic fault tree for the depressurization valves, Figure 15-11, models the possible failures of the DPVs.

The GDCS is a passive system and the seismic fault tree for this system, Figure 15-12, includes the failure of the squib and check valves, as well as the piping.

The seismic fault tree for the vacuum breakers, Figure 15-13, models the possible failures of the vacuum breakers themselves.

The PCCS is a fully passive system with no active components. The seismic fault tree for PCCS is shown in Figure 15-14; it includes failure of heat exchangers and failure of piping.

Communication between the upper pools requires only the opening of valves. The seismic fault tree for this function is shown in Figure 15-15.

The firewater diesel-driven pump is designed to supply water to the upper pools. The seismic fault tree for this function is shown in Figure 15-16.

For a LOCA event, a seismically induced break outside containment (BOC) in the RWCU line is shown in Figure 15-4b. Though seismically qualified, the inclusion of the RWCU system break outside containment presents a seismic margin capacity insight, especially given the significant CDF contribution of the BOC in RWCU line among the LOCA events. The seismic fault tree for this function is shown in Figure 15-21.

15.4.2 Shutdown Analysis

The seismic shutdown analysis uses the same seismic margins approach, as well as many of the risk model elements used in the at power seismic analysis.

The HCLPF nodal fault trees used for the shutdown seismic analysis are the same as those used in the at power seismic analysis, with the exception of the structural failure node.

The seismic-induced initiating event assumed in the accident sequence analysis is Loss of Preferred Power (LOPP). Scenarios with structural failures are modeled as leading directly to core damage.

Three shutdown seismic event trees are developed to differentiate the major plant operation modes during shutdown conditions. The following three shutdown modes are addressed (consistent with the other external events shutdown analyses): Mode 5, Mode 6-Unflooded, and Mode 6-Flooded.

15.4.2.1 Shutdown Seismic Event Tree

The shutdown seismic fault tree and event trees are provided in Figures 15-17 through 15-20.

Mode 5 and Mode 5 Open

There are two modes modeled in Mode 5 in the PRA shutdown risk analysis (Section 16), Mode 5 (cold shutdown) and Mode 5 Open (cold shutdown with containment open). To address the specific time of concern in the PRA shutdown risk analysis, Mode 5 was divided into two modes, one being the Tech Spec defined Mode 5 and the other being Mode 5 Open (Mode 5 with open containment).

The Mode 5 Open is not a Tech Spec defined Mode, and actually includes a period of time from two separate Tech Spec defined Modes. Mode 5 Open is essentially the same as Mode 5 with the exception being that there is no intact containment. The reactor vessel head is still on, but the containment is open.

Part of the Mode 5 Open period is actually part of the Tech Spec defined Mode 6. According to the Tech Spec mode definitions, Mode 6 begins when one or more reactor vessel head closure bolts is less than fully tensioned. Mode 5 Open sequences consider pressure relief in the model. Mode 6 sequences do not since the RPV head is removed for the majority of the mode. Due to the Tech Spec definition, there is a small period of time that is technically Mode 6, but where the vessel head may still provide a pressure seal. The period of Mode 6 with the vessel head still on is included in the Mode 5 Open PRA shutdown risk analysis.

It is assumed in the shutdown risk analysis that the period during which the reactor vessel head is on in Mode 6 is bounded by the Mode 5 Open shutdown risk analysis.

The first node of the tree (Figure 15-18a), SIS, models seismic-induced failures of the containment building, reactor building, control building, RPV pedestal or supports, fuel assemblies, CRD housing, containment or shroud support. Failure of this node is modeled as leading directly to core damage.

The second node of the tree, DC, models seismic-induced failure of emergency DC power. As shown in Figure 15-6, this node models failure of the batteries, motor control centers or cable trays.

Success of the Isolation Condenser, represented by the IC node, guarantees short-term and long-term residual heat removal, even in the event of DC power failure. Failure of both IC and DC leads directly to core damage.

If the isolation condenser function fails but DC power is available, RPV pressure will increase and lead to the actuation of the safety valves, modeled by the SRV node. Sequences with success at the SRV node continue to the node representing fire protection system water injection into the RPV (FPW).

If the SRV function fails, RPV depressurization can be completed using the DPVs. Failure of both SRV and DPV leads directly to core damage.

Following successful RPV depressurization at the DPV node, actuation of the GDCS (GDCS node) is next challenged to supply water inventory to maintain the core covered and to compensate for water inventory losses due to steam discharge to the drywell.

For sequences in which the SRVs have failed but successful DPVs, the fire protection system (FPW node) can be used as an alternative RPV injection method if GDCS fails.

There is no Tech Spec requirement of PCCS during shutdown condition, though the PCCS may be available for Mode 5 while containment is still intact. As shown in Table 15-11a, Table 15-11b, Figure 15-18a, and Figure 15-18b, for SMA, the seismic margin capacity insights would be the same for sequences whether PCCS was included in the event trees. (Table 15-11b and Figure 15-18b are provided in support of this insight).

Finally, the PI node models failure of the valve allowing communication between the upper pools.

Mode 6 (Unflooded)

The Mode 6-Unflooded shutdown seismic event tree is shown in Figure 15-19. As discussed previously, the event tree assumes a LOPP condition.

Similar to the Mode 5 shutdown seismic event tree, failure of the SIS node leads directly to core damage.

Long term cooling in this operation mode would be guaranteed by the actuation of the Fire Protection Water System modeled in the FPW node, or as an alternative, the Gravity Driven Cooling System (GDCS node).

Mode 6 (Flooded)

In this mode of operation, the cavity is flooded and the reactor vessel is open. If an earthquake occurred during this mode, no system would have to be actuated to guarantee long term cooling; only structural integrity would have to be maintained.

The Mode 6-Flooded shutdown seismic event tree, shown in Figure 15-20, includes only one node (SIS) that models maintaining structural integrity.

15.4.2.2 System Analysis

The HCLPF nodal fault trees used for the shutdown seismic analysis are the same as those used in the at power seismic analysis, with the exception of the structural failure node. The structural failure nodal fault tree (SIS), Figure 15-17, for the shutdown seismic event tree is developed to

include the structural failures included in the at power SI nodal fault tree, as well as the structural elements related to reactivity control.

15.5 RESULTS

The results of the SMA HCLPF accident sequence analysis are shown on Figures 15-4, 15-18, 15-19 and 15-20, and in Tables 15-10, 15-11a and 15-11b. No accident sequence has a HCLPF lower than 0.84g (i.e., 1.67 x SSE). As such, the ESBWR plant and equipment are shown to be capable of withstanding an earthquake with a magnitude at least 1.67 times the safe shutdown earthquake (SSE).

15.6 INSIGHTS

The ESBWR seismic margins HCLPF accident sequence analysis highlights the following key insights regarding the seismic capability of the ESBWR:

(1) The ESBWR is inherently capable of safe shutdown in response to strong seismic events.

(2) The most significant HCLPF sequences are seismic-induced loss of DC power and seismic-induced ATWS due to seismic-induced failure of the fuel channels and seismic-induced failure of the SLC tank (both with 0.84g HCLPF).

15.7 CONCLUSIONS

The ESBWR is inherently capable of safe shutdown in response to strong magnitude earthquakes beyond the design basis earthquake. The analysis shows that the ESBWR has a plant level HCLPF value of at least 1.67 times the Safe Shutdown Earthquake (SSE).

15.8 REFERENCES

15-1 Electric Power Research Institute, "Methodology for Developing Seismic Fragilities", Prepared by J.W. Reed and R.P. Kennedy, EPRI TR-103959, June 1994.

15-2 Electric Power Research Institute, "A Methodology for Assessment of Nuclear Power Plant Seismic Margin", EPRI NP-6041, June 1991.

15-3 ESBWR Design Control Document, 26A6642AL Rev. 5. May 2008.

15-4 *PRA Procedures Guide*, NUREG/CR-2300, January 1983.

15-5 *Recommendations to the Nuclear Regulatory Commission on Trial Guidelines for Seismic Margin Reviews of Nuclear Power Plants, NUREG/CR-4482, 1986.*

15-6 Harrison, S. W., Esfandiari, S., Pandya, D., and Ahmed, R., *Seismic Fragility Curves for Evaluation of Generic Electrical Conduit Supports, to be presented in the ASME PVP Annual Meetings*, Honolulu, Hawaii, July 22-24, 1989.

15-7 Campbell, R. D., Ravindra, M. K., and Bhatia, A., *Compilation of Fragility Information from Available Probabilistic Risk Assessments*, LLNL, September 1985.

15-8 *Report on Quantification of Uncertainties, Report of Seismic Analysis Main Committee*, ASCE, March 15 1983.

15-9 Mirza, S.A. and J.G. MacGregor, "Variability of Mechanical Properties of Reinforcing Bars", Journal of the Structural Division ASCE, May 1979.

15-10 *Severe Accident Risk Assessment—Limerick Generating Station*, NUS Report, April 1983.

15-11 *Handbook of Nuclear Power Plant Seismic Fragilities, Seismic Safety Margins Research Program*, NUREG/CR-3558, June 1985.

15-12 ASCE/SEI 43-05, *Seismic Design Criteria for Structures, Systems, and Components in Nuclear Facilities*, American Society of Civil Engineers.

15-13 Regulatory Guide 1.208, "A Performance-Based Approach to Define Site-Specific Earthquake Ground Motion." USNRC, March 2007.

15-14 "SECY-93-087 – Policy, Technical, and Licensing Issues Pertaining to Evolutionary and Advanced Light-Water Reactor (ALWR) Design," USNRC Memorandum, July 21, 1993, Chilk to Taylor.

15-15 Kennedy, R. P., and Ravindra, M. K., *Seismic Fragilities for Nuclear Power Plant Risk Studies, Nuclear Engineering and Design*, PP47-68, (79) 1984.

15-16 *Structural Analysis and Design of Nuclear Plant Facilities, Manual and Reports on Engineering Practice*, No. 58, ASCE, 1980.

15-17 *Development of Criteria for Seismic Review of Selected Nuclear Power Plants*, NUREG/CR-0098, May 1978.

15-18 Bader, M and H. Krawinkler, "Shear Transfer in Thick-Walled Reinforced Concrete Cylinders", 6th SMiRT, Paris, France, August 1981.

Table 15-1
Seismic Capacity Summary

		Fragility		
Structure/Component	**Failure Mode**	**Capacity[1] A_m (g)**	**Combined[2] Uncertainty**	**HCLPF (g)[3]**
Reactor Building	Shear failure of wall	2.63	0.43	0.97
Containment	Shear	3.16	0.41	1.20
RPV Pedestal	Shear	3.34	0.44	1.21
RPV Support Brackets	Yielding of bracket	3.22	0.33	1.49
Control Building	Shear failure of wall	3.28	0.48	1.07
Firewater Service Complex	Shear key failure	3.19	0.38	1.32

Notes to Table 15-1:

(1) Capacities are in terms of median peak ground acceleration.

(2) Combined uncertainties are composite logarithmic standard deviations of uncertainty and randomness.

(3) HCLPF capacity for components that are significant contributors to overall plant level seismic margin is assumed to be 0.84g minimum which is 1.67 times SSE.

Table 15-2

Seismic Fragility for Reactor Building Shear Walls

Component:		Reactor Building/Fuel Building Complex			
Failure Mode:		Shear Failure of Wall Along Column Line R1			
Factor of Safety			**Median Value**	β_R	β_U
F_C	F_S	Strength	1.77	0.00	0.20
	$F\mu$	Inelastic Energy Absorption	2.07	0.07	0.14
F_{RS}	F_{SA}	Spectral Shape			
		Response Spectrum Shape	1.00	0.00	0.00
		Horizontal Direction Peak Response	1.00	0.13	0.00
		Vertical Component Response	1.00	0.10	0.00
	F_D	Damping	1.20	0.00	0.18
	F_M	Modeling	1.00	0.00	0.15
	F_{MC}	Modal Response Combination	1.00	0.15	0.00
	F_{ECC}	Earthquake Component Combination	1.00	0.05	0.00
	F_{SSI}	Soil Structure Interaction			
		Ground Motion Incoherence	1.00	0.00	0.00
		Vertical Spatial Variation	1.20	0.06	0.08
		SSI Analysis	1.00	0.00	0.00
Overall Factor of Safety			**5.26**	**0.25**	**0.35**
A_d = Peak Ground Acceleration of the Single Envelope Design Spectra = 0.5g					
A_m = Median Peak Ground Acceleration = $F*A_d$ = 2.63g					
β_C = Combined Logarithmic Standard Deviation = 0.43					
HCLPF = 0.97g					

Table 15-3

Seismic Fragility for Containment Wall

Component:		Reinforced Concrete Containment Vessel (RCCV) Wall			
Failure Mode:		Shear			
Factor of Safety			**Median Value**	β_R	β_U
F_C	F_S	Strength	3.27	0.00	0.21
	$F\mu$	Inelastic Energy Absorption	1.35	0.03	0.02
F_{RS}	F_{SA}	Spectral Shape			
		Response Spectrum Shape	1.00	0.00	0.00
		Horizontal Direction Peak Response	1.00	0.13	0.00
		Vertical Component Response	1.00	0.10	0.00
	F_D	Damping	1.20	0.00	0.18
	F_M	Modeling	1.00	0.00	0.15
	F_{MC}	Modal Response Combination	1.00	0.15	0.00
	F_{ECC}	Earthquake Component Combination	1.00	0.12	0.00
	F_{SSI}	Soil Structure Interaction			
		Ground Motion Incoherence	1.00	0.00	0.00
		Vertical Spatial Variation	1.20	0.06	0.08
		SSI Analysis	1.00	0.00	0.00
Overall Factor of Safety			**6.32**	**0.26**	**0.32**
A_d = Peak Ground Acceleration of Single Envelope Design Spectra = 0.5g					
A_m = Median Peak Ground Acceleration = $F*A_d$ = 3.16g					
β_C = Combined Logarithmic Standard Deviation = 0.41					
HCLPF = 1.20g					

Table 15-4
Seismic Fragility for RPV Pedestal

Component:		Reactor Pressure Vessel Pedestal			
Failure Mode:		Shear			
Factor of Safety			**Median Value**	β_R	β_U
F_C	F_S	Strength	3.47	0.00	0.25
	$F\mu$	Inelastic Energy Absorption	1.34	0.03	0.02
F_{RS}	F_{SA}	Spectral Shape			
		Response Spectrum Shape	1.00	0.00	0.00
		Horizontal Direction Peak Response	1.00	0.13	0.00
		Vertical Component Response	1.00	0.10	0.00
	F_D	Damping	1.20	0.00	0.18
	F_M	Modeling	1.00	0.00	0.15
	F_{MC}	Modal Response Combination	1.00	0.15	0.00
	F_{ECC}	Earthquake Component Combination	1.00	0.12	0.00
	F_{SSI}	Soil Structure Interaction			
		Ground Motion Incoherence	1.00	0.00	0.00
		Vertical Spatial Variation	1.20	0.06	0.08
		SSI Analysis	1.00	0.00	0.00
Overall Factor of Safety			**6.67**	**0.26**	**0.35**
A_d = Peak Ground Acceleration of Single Envelope Design Spectra = 0.5g					
A_m = Median Peak Ground Acceleration = $F*A_d$ = 3.34g					
β_C = Combined Logarithmic Standard Deviation = 0.44					
HCLPF = 1.21g					

Table 15-5

Seismic Fragility for RPV Support Brackets

Component:		RPV Support Brackets			
Failure Mode:		Yielding of Horizontal Plate of the Bracket			
Factor of Safety			**Median Value**	β_R	β_U
F_C	F_S	Strength	4.68	0.00	0.12
	$F\mu$	Inelastic Energy Absorption	1.00	0.00	0.00
F_{RS}	F_{SA}	Spectral Shape			
		Response Spectrum Shape	1.00	0.00	0.00
		Horizontal Direction Peak Response	1.00	0.13	0.00
		Vertical Component Response	1.00	0.10	0.00
	F_D	Damping	1.00	0.00	0.00
	F_M	Modeling	1.00	0.00	0.17
	F_{MC}	Modal Response Combination	1.00	0.15	0.00
	F_{ECC}	Earthquake Component Combination	1.00	0.05	0.00
	F_{SSI}	Soil Structure Interaction			
		Ground Motion Incoherence	1.15	0.00	0.07
		Vertical Spatial Variation	1.20	0.06	0.08
		SSI Analysis	1.00	0.00	0.00
Overall Factor of Safety			**6.44**	**0.24**	**0.23**
A_d = Peak Ground Acceleration of Single Envelope Design Spectra = 0.5g					
A_m = Median Peak Ground Acceleration = $F*A_d$ = 3.22g					
β_C = Combined Logarithmic Standard Deviation = 0.33.					
HCLPF = 1.49g					

Table 15-6

Seismic Fragility for Control Building

Component:		Control Building			
Failure Mode:		Shear Failure of Wall Along Column Line CA			
Factor of Safety			**Median Value**	β_R	β_U
F_C	F_S	Strength	2.45	0.00	0.20
	$F\mu$	Inelastic Energy Absorption	2.01	0.07	0.14
F_{RS}	F_{SA}	Spectral Shape			
		Response Spectrum Shape	1.00	0.00	0.00
		Horizontal Direction Peak Response	1.00	0.13	0.00
		Vertical Component Response	1.00	0.10	0.00
	F_D	Damping	1.00	0.00	0.00
	F_M	Modeling	1.00	0.00	0.15
	F_{MC}	Modal Response Combination	1.00	0.15	0.00
	F_{ECC}	Earthquake Component Combination	1.00	0.05	0.00
	F_{SSI}	Soil Structure Interaction			
		Ground Motion Incoherence	1.00	0.00	0.00
		Vertical Spatial Variation	1.00	0.08	0.05
		SSI Analysis	1.33	0.00	0.29
Overall Factor of Safety			**6.56**	**0.25**	**0.41**
A_d = Peak Ground Acceleration of Single Design Spectra = 0.5g					
A_m = Median Peak Ground Acceleration = $F*A_d$ = 3.28g					
β_C = Combined Logarithmic Standard Deviation = 0.48					
HCLPF = 1.07g					

Table 15-7

Seismic Fragility for Firewater Service Complex

Component:		Firewater Service Complex			
Failure Mode:		Failure of Shear Keys in the East-West Direction			
Factor of Safety			**Median Value**	β_R	β_U
F_C	F_S	Strength	4.71	0.00	0.18
	$F\mu$	Inelastic Energy Absorption	1.00	0.00	0.00
F_{RS}	F_{SA}	Spectral Shape			
		Response Spectrum Shape	1.00	0.00	0.00
		Horizontal Direction Peak Response	1.00	0.13	0.00
		Vertical Component Response	1.00	0.10	0.00
	F_D	Damping	1.20	0.00	0.18
	F_M	Modeling	1.00	0.00	0.16
	F_{MC}	Modal Response Combination	1.00	0.15	0.00
	F_{ECC}	Earthquake Component Combination	1.00	0.05	0.00
	F_{SSI}	Soil Structure Interaction			
		Ground Motion Incoherence	1.13	0.00	0.06
		Vertical Spatial Variation	1.00	0.00	0.00
		SSI Analysis	1.00	0.00	0.00
Overall Factor of Safety			**6.38**	**0.23**	**0.30**
A_d = Peak Ground Acceleration of Single Design Spectra = 0.5g					
A_m = Median Peak Ground Acceleration = $F*A_d$ = 3.19g					
β_C = Combined Logarithmic Standard Deviation = 0.38					
HCLPF = 1.32g					

Note to Table 15-7.
The firewater storage tanks which are part of the firewater service complex have higher HCLPF capacity, thus do not govern.

Table 15-8

ESBWR Systems and Components/Structures Fragilities

System/Component as a function of Event Tree Node	A_m(g)	β_c	HCLPF(g)
PLANT ESS STRUCTURES (SI)			
- Reactor Building (FRBLDG)[1]	2.63	0.43	0.97
- Containment (FCONT)	3.16	0.41	1.20
- RPV Pedestal (FPEDST)	3.34	0.44	1.21
- Control Building (FCTRBLDG)	3.28	0.48	1.07
- RPV Support Brackets(FRPV)	3.22	0.33	1.49
- Firewater Service Complex (FFWSC)	3.19	0.38	1.32
DC POWER (DC)			
- Batteries (FBTR)			0.84
- Cable trays (FCTRAY)			0.84
- Motor control centers (FMCC)			0.84
REACTIVITY CONTROL SYSTEM (SCRAM)			
- Fuel assembly (FFASSY)			0.84
- CRD Guide tubes (FCRDGTB)			0.84
- Shroud support (FSHRSPT)			0.84
- CRD Housing (FCRDHS)			0.84
- Hydraulic control unit (FHYLTUT)			0.84
SAFETY RELEF VALVE (SRV)			
- SRV (FSRV)			0.84
STANDBY LIQUID CONTROL (SLCS)			
- Accumulator Tank (FACCT)			0.84
- Check valve (FCHV)			0.84
- Squib valve (FSQUV)			0.84
- Piping (FPIP)			0.84
- Valve (air operated) (FAOV)			0.84
ISOLATION CONDENSER (IC)			
- Piping (FPIP)			0.84
- Heat exchanger (FICHEX)			0.84
- Valve (motor operated) (FMOV)			0.84
- Valve (nitrogen operated) (FNOV)			0.84

Table 15-8

ESBWR Systems and Components/Structures Fragilities

System/Component as a function of Event Tree Node	A_m(g)	β_c	HCLPF(g)
DEPRESSURIZATION VALVE (DPV)			
- DPV (FDPV)			0.84
GRAVITY-DRIVEN COOLING (GDCS)			
- Check valve (FCHV)			0.84
- Squib valve (FSQUV)			0.84
- Piping (FPIP)			0.84
VACUUM BREAKERS (VB)			
- Vacuum breakers (FVBS)			0.84
PASSIVE CONTAINMENT COOLING (PCCS)			
- Heat Exchanger (FPCCSHEX)			0.84
- Piping (FPIP)			0.84
IC/PCC POOL INTERCONNECTION (PI)			
- Valve (motor operated) (FIC/PCCI)			0.84
FIRE PROTECTION WATER SYSTEM (FPW)			
Pump (diesel driven) (FPUMPDD)			0.84
- Tank (FTANK)			1.32
- Piping (FPIP)			0.84
- FWSC (FFWSC)			1.32

Notes to Table 15-8:

(1) Variables are used in Table 15-9.

Table 15-9

Seismic Event Tree Nodal HCLPF Equations

Top Event	Nodal HCLPF Equations(1) (2)
Structural Integrity (SI)	FSTRUC = FRBLDG + FCONT + FPEDST + FCTRBLDG + FRPV + FFWSC = (0.97g + 1.20g + 1.21g + 1.07g + 1.49g + 1.32g) = 0.97g
DC Power (DC)	FDCP = FBTR + FCTRAY + FMCC = (0.84g + 0.84g + 0.84g) = 0.84g
Scram (SCRAM)	FRC = FFASSY + FCRDGTB + FSHRSPT + FCRDHS + FHYCTUT = (0.84g + 0.84g + 0.84g + 0.84g + 0.84g) = 0.84g
SRVs (SRV)	FSRV = FSRVS = 0.84g
Standby Liquid Control (SLCS)	FSLCS = FACCT + FCHV + FSQUV + FPIP + FAOV = (0.84g + 0.84g + 0.84g + 0.84g + 0.84g) = 0.84g
Isolation Condensers (IC)	FIC = FPIP + FICHEX + FMOV + FNOV =(0.84g + 0.84g + 0.84g + 0.84g) = 0.84g
DPVs (DPV)	FDPV = FDPVS = 0.84g
Gravity Driven Cooling System (GDCS)	FGDCS = FCHV + FSQUV + FPIP = (0.84g + 0.84g + 0.84g) = 0.84g
Vacuum Breakers (VB)	FVB = FVBS = 0.84g
Passive Containment Cooling (PCCS)	FPCCS = FPCCSHEX + FPIP = (0.84g + 0.84g) = 0.84g
IC/PCC Pool Interconnection (PI)	FIC/PCCINT = PIC/PCCI = 0.84g
Fire Protection Water (FPW)	FFPW = FPUMPDD + FTANK + FPIP + FFWSC = (0.84g + 1.32g + 0.84g + 1.32g) = 0.84g
Structural Integrity Shutdown (SIS)	FSTRUCSH = FRBLDG + FCTRBLDG + FRPV + FFASSY + FPEDST + FSHRSPT + FCONT + FCRDHS = (0.97g + 1.07g + 1.49g + 0.84g + 1.21g + 0.84g + 1.20g + 0.84g) = 0.84g

Notes to Table 15-9:

(1) Refer to nodal fault trees (Figures 15-5 through 15-21) for descriptions of the individual fragility basic events.

(2) Per the MIN-MAX convention used, the overall fragility of a group of inputs combined using OR logic is determined by the lowest fragility input.

Table 15-10

HCLPF Derivation for Figure 15-4a and Figure 15-4b

(MIN-MAX Method)

SET Sequence	Sequence HCLPF[(1)]
Figure 15-4a	
Sequence 3	PI*FPW = 0.84g*0.84g = 0.84g
Sequence 4	PCCS = 0.84g
Sequence 5	VB = 0.84g
Sequence 6	GDCS = 0.84g
Sequence 7	DPV = 0.84g
Sequence 8	SRV = 0.84g
Sequence 11	SCRAM*PI*FPW = 0.84g*0.84g*0.84g = 0.84g
Sequence 12	SCRAM*IC = 0.84g*0.84g = 0.84g
Sequence 13	SCRAM*SLCS = 0.84g*0.84g = 0.84g
Sequence 14	SCRAM*SRV = 0.84g*0.84g = 0.84g
Sequence 15	DC = 0.84g
Sequence 16	SI = 0.97g
Figure 15-4b	
Sequence 16	IRWCU = 0.84g
Sequence 17	SI = 0.97g

Notes to Table 15-10:

(1) Per the MIN-MAX convention used, the overall fragility of a group of inputs combined using AND logic is determined by the highest fragility input.

Table 15-11a

HCLPF Derivation for Figure 15-18a, Figure 15-19 and Figure 15-20

(MIN-MAX Method)

MODE 5

SET Sequence	Sequence HCLPF(1)
Sequence 4	IC *FPW*GDCS= 0.84g*0.84g*0.84g = 0.84g
Sequence 5	IC *FPW*DPV = 0.84g*0.84g*0.84g = 0.84g
Sequence 8	IC *SRV*GDCS*FPW = 0.84g *0.84g*0.84g*0.84g = 0.84g
Sequence 9	IC*SRV*DPV = 0.84g*0.84g*0.84g = 0.84g
Sequence 11	DC*IC = 0.84g *0.84g= 0.84g
Sequence 12	SIS = 0.84g

MODE 6 UNFLOODED

SET Sequence	Sequence HCLPF(1)
Sequence 3	FPW*GDCS = 0.84g*0.84g = 0.84g
Sequence 5	DC*FPW = 0.84g*0.84g = 0.84g
Sequence 6	SIS = 0.84g

MODE 6 FLOODED

SET Sequence	Sequence HCLPF
Sequence 2	SIS = 0.84g

Notes to Table 15-11:

(1) Per the MIN-MAX convention used, the overall fragility of a group of inputs combined using AND logic is determined by the highest fragility input.

Table 15-11b HCLPF Derivation for ESBWR Shutdown Seismic Event Tree Sequences For Figure 15-18b (Sensitivity) (MIN-MAX Method)

MODE 5

SET Sequence	Sequence HCLPF(1)
Sequence 4	IC *FPW*PI = 0.84g *0.84g *0.84g = 0.84g
Sequence 5	IC *FPW*PCCS = 0.84g *0.84g *0.84g = 0.84g
Sequence 6	IC *FPW*VB = 0.84g *0.84g *0.84g = 0.84g
Sequence 7	IC *FPW*GDCS = 0.84g*0.84g*0.84g = 0.84g
Sequence 8	IC *FPW*DPV = 0.84g*0.84g *0.84g = 0.84g
Sequence 10	IC *SRV*PI = 0.84g *0.84g*0.84g = 0.84g
Sequence 11	IC *SRV* PCCS = 0.84g*0.84g*0.84g = 0.84g
Sequence 12	IC *SRV* VB = 0.84g*0.84g*0.84g = 0.84g
Sequence 14	IC *SRV* GDCS*PI = 0.84g*0.84g*0.84g*0.84g = 0.84g
Sequence 15	IC* SRV* GDCS* PCCS = 0.84g*0.84g*0.84g*0.84g = 0.84g
Sequence 16	IC *SRV* GDCS* VB = 0.84g*0.84g*0.84g*0.84g = 0.84g
Sequence 17	IC *SRV* GDCS* FPW = 0.84g*0.84g*0.84g*0.84g = 0.84g
Sequence 18	IC *SRV* DPV = 0.84g*0.84g*0.84g = 0.84g
Sequence 20	IC *DC = 0.84g*0.84g = 0.84g
Sequence 21	SIS = 0.84g

Notes to Table 15-11:

(1) Per the MIN-MAX convention used, the overall fragility of a group of inputs combined using AND logic is determined by the highest fragility input.

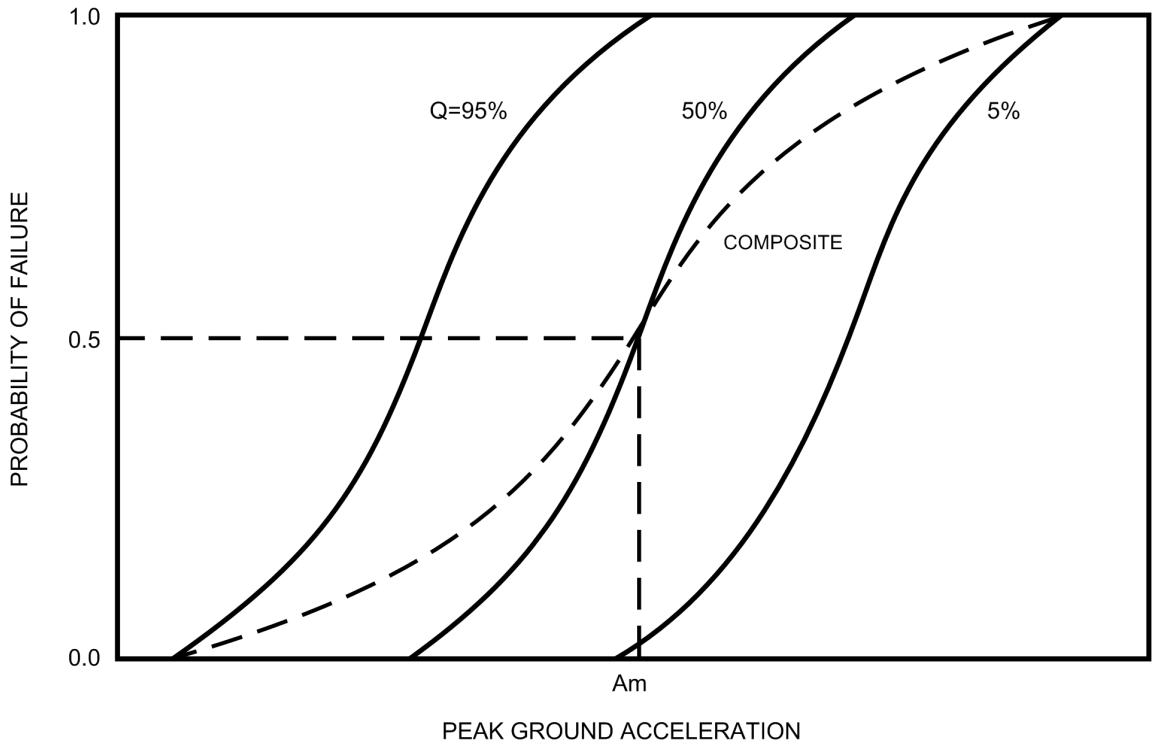

Figure 15-1. Typical Fragility Curves

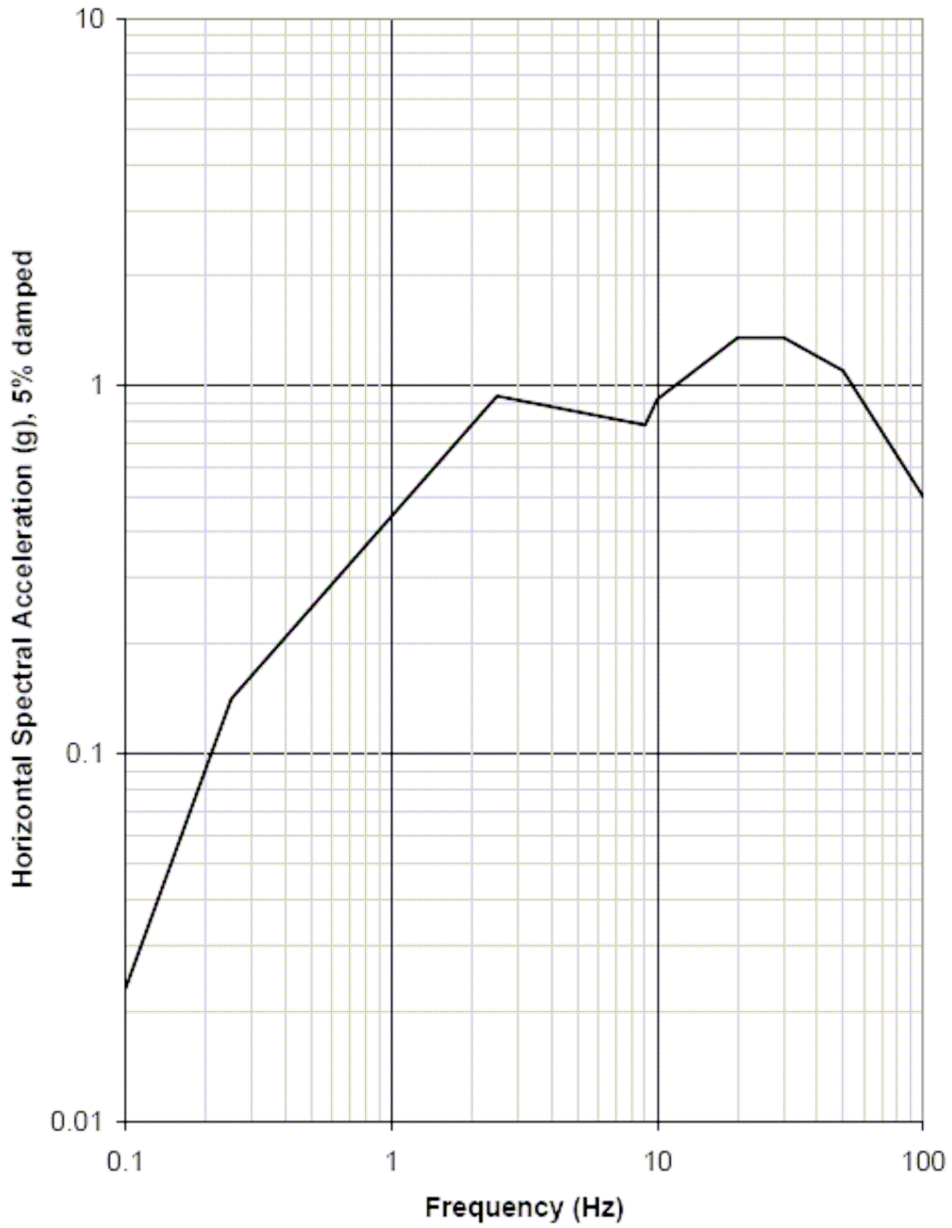

Figure 15-2. ESBWR Horizontal SSE Design Ground Response Spectrum at Foundation Level

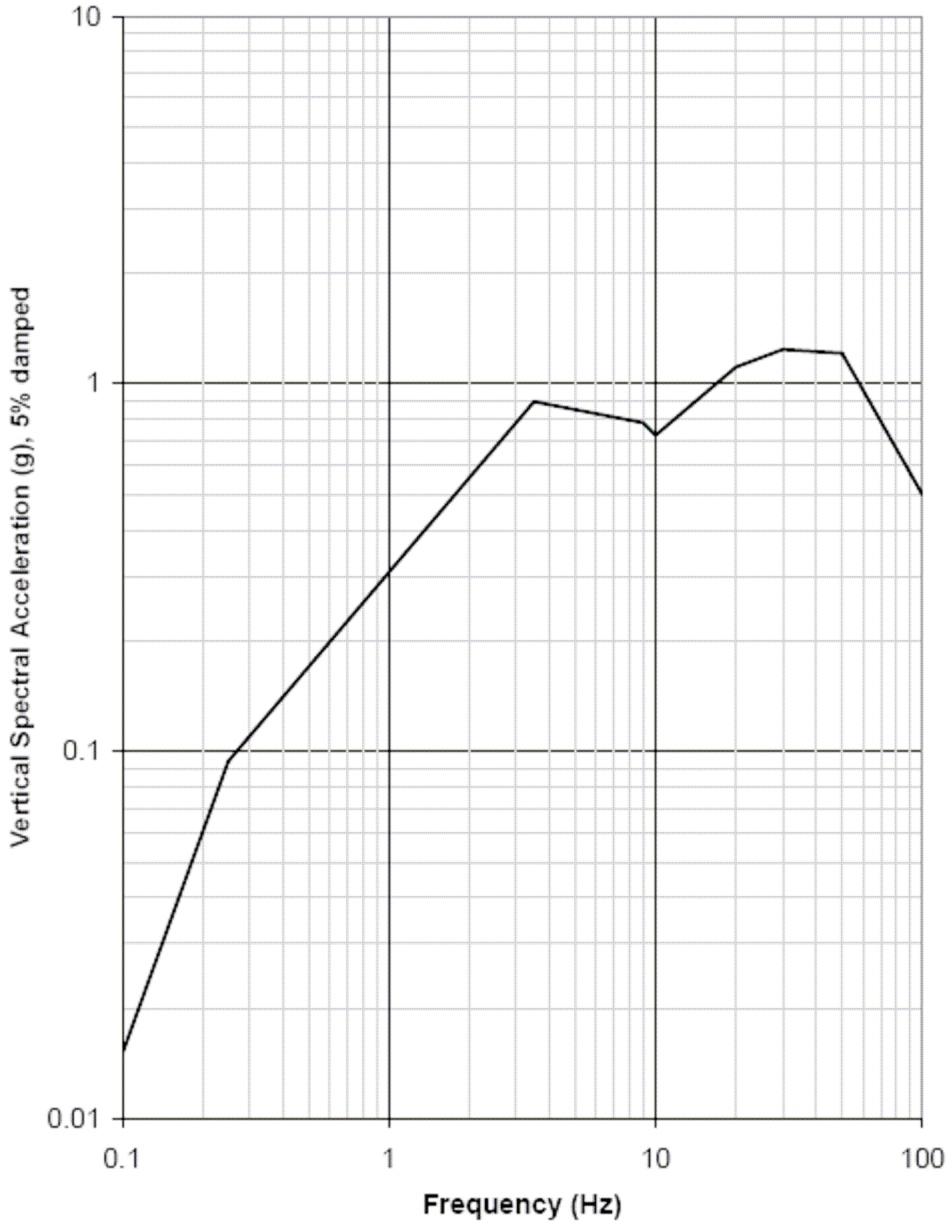

Figure 15-3. ESBWR Vertical SSE Design Ground Response Spectrum at Foundation Level

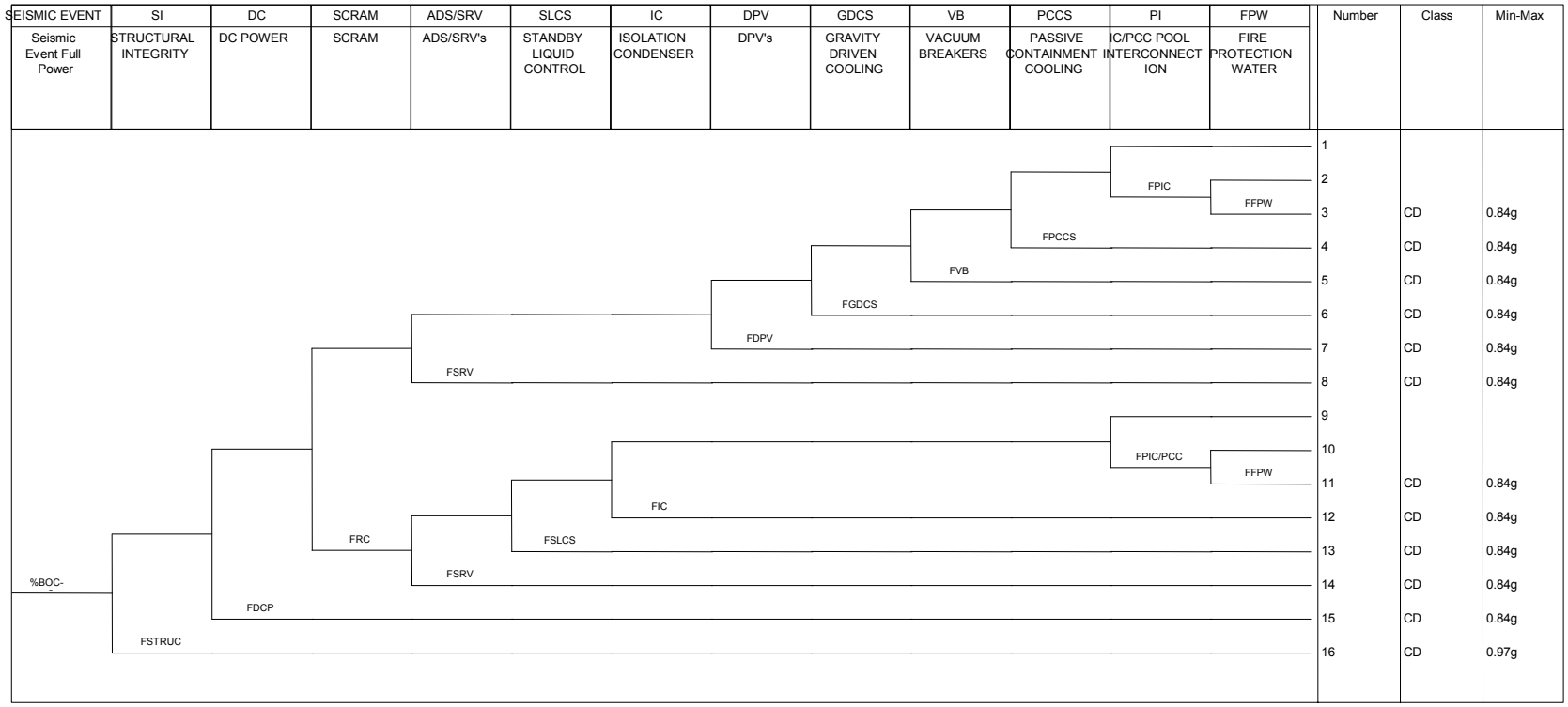

Figure 15-4a. Seismic Event Tree (At Power)

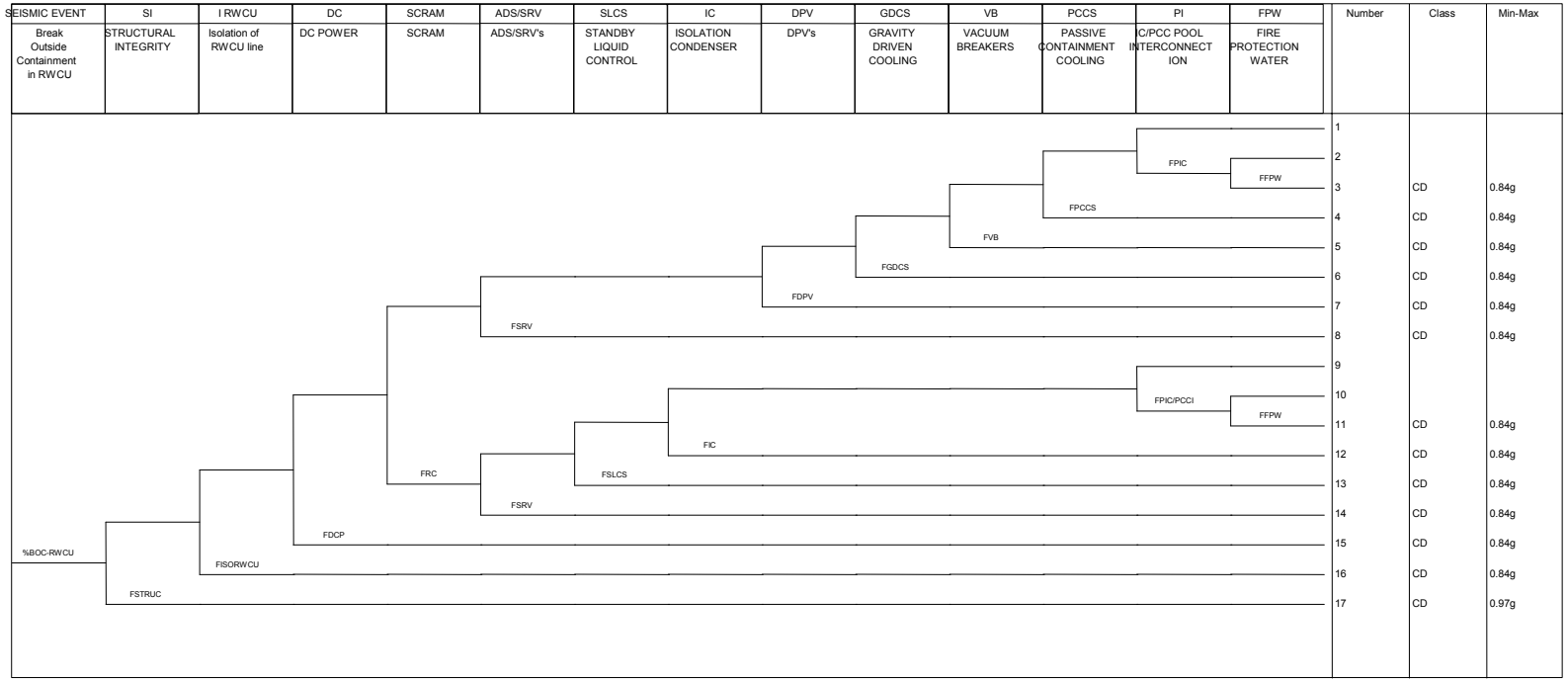

Figure 15-4b. Seismic Induced Break Outside Containment in RWCU Line (At Power)

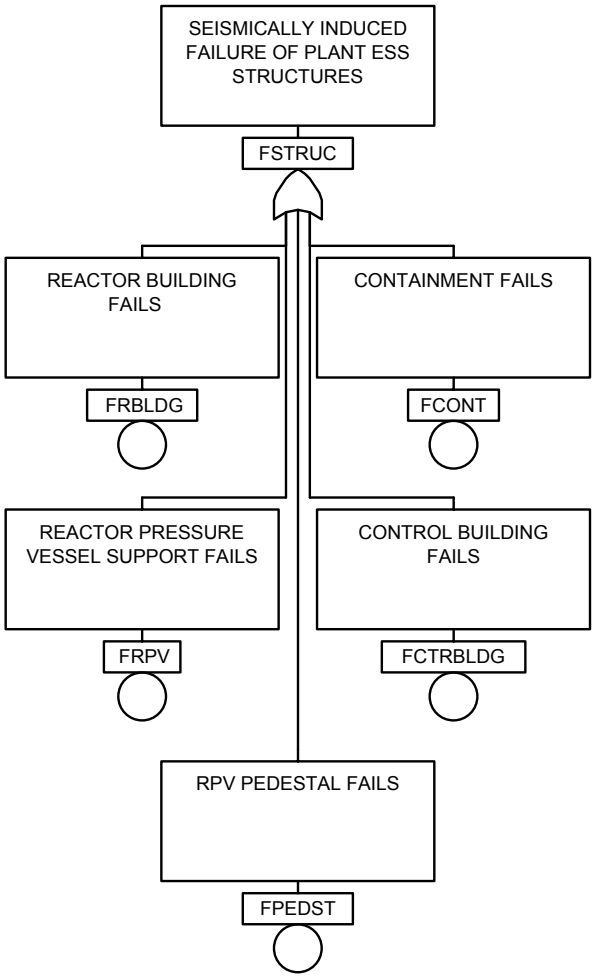

Figure 15-5. Structural Seismic Fault Tree (At Power)

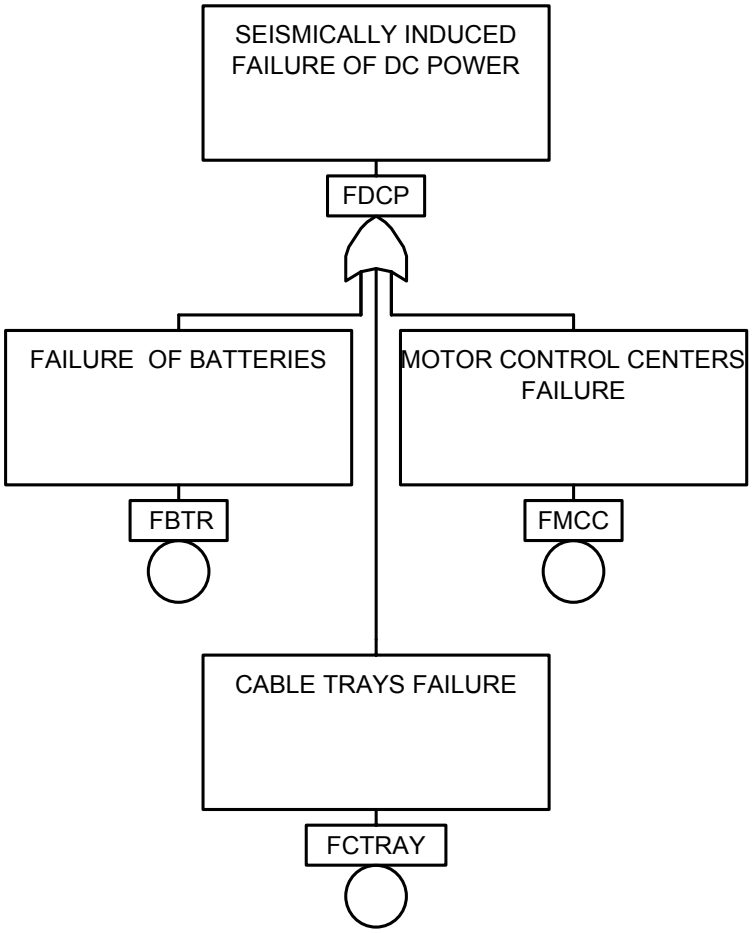

Figure 15-6. DC Power Seismic Fault Tree

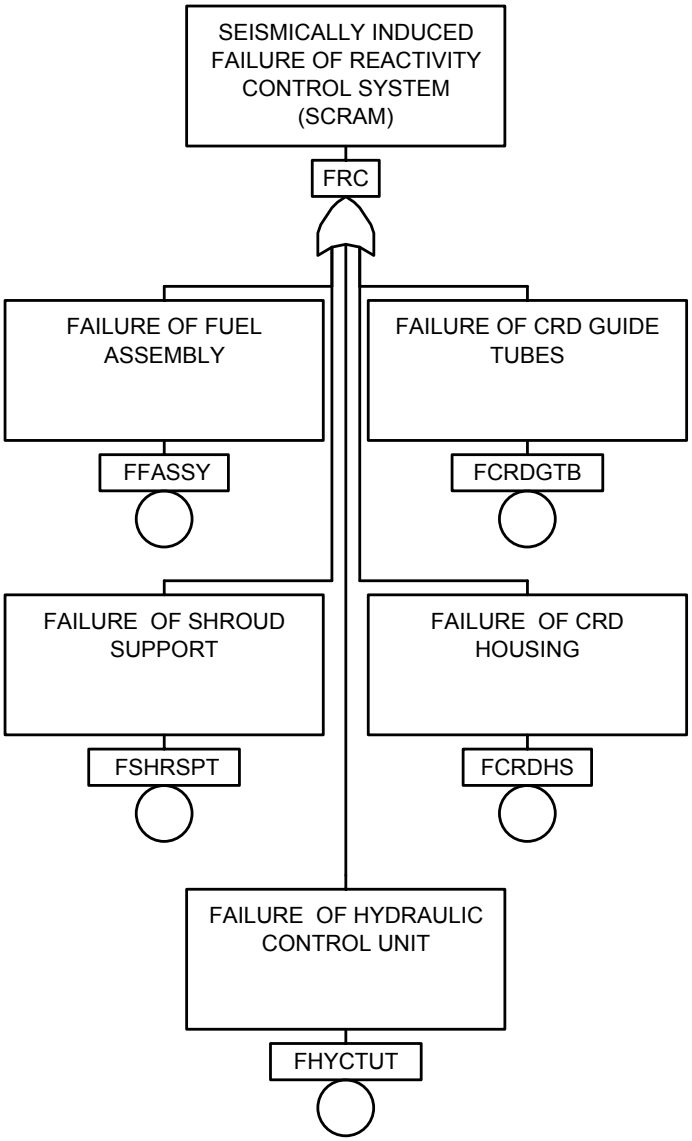

Figure 15-7. SCRAM Seismic Fault Tree

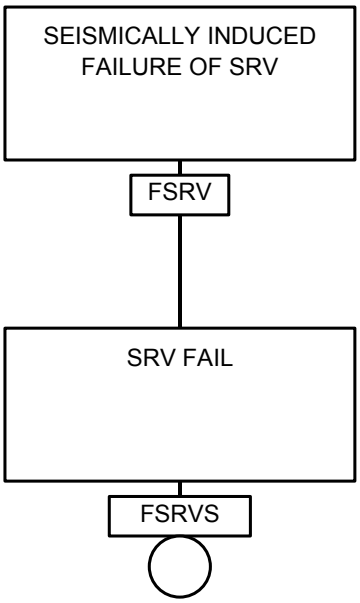

Figure 15-8. SRV Seismic Fault Tree

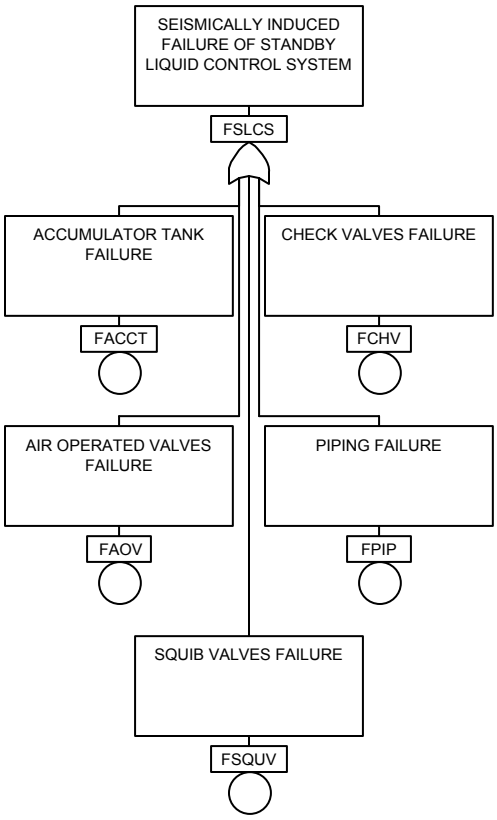

Figure 15-9. SLCS Seismic Fault Tree

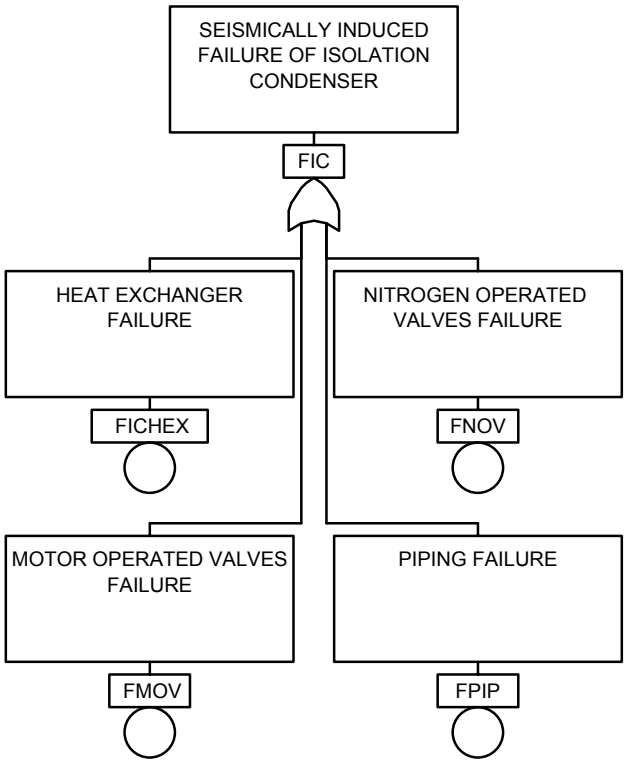

Figure 15-10. IC Seismic Fault Tree

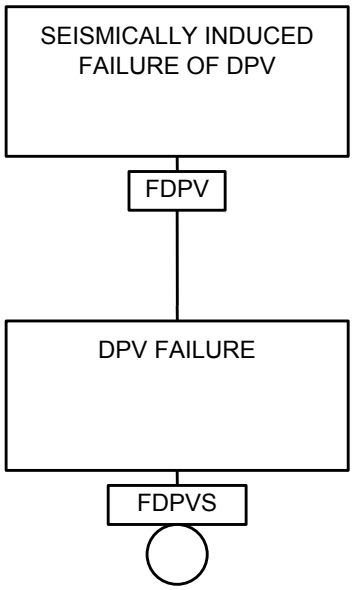

Figure 15-11. DPV Seismic Fault Tree

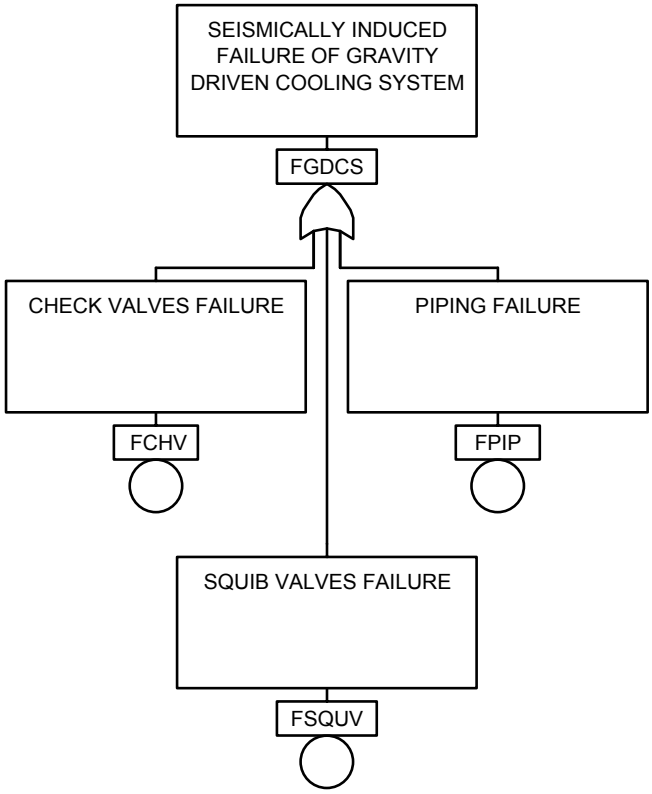

Figure 15-12. GDCS Seismic Fault Tree

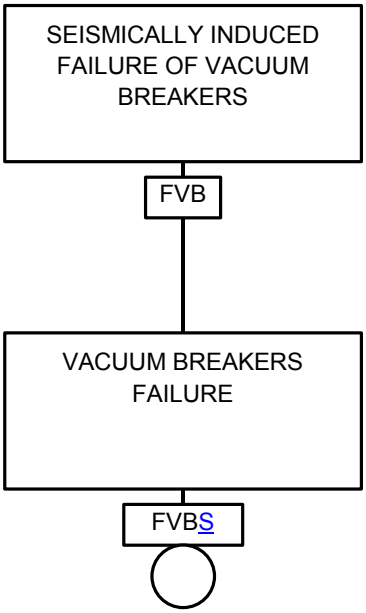

Figure 15-13. VB Seismic Fault Tree

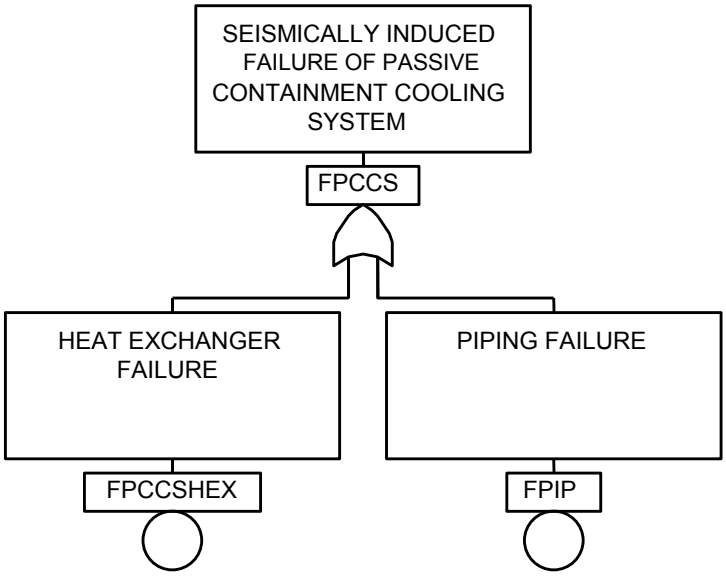

Figure 15-14. PCCS Seismic Fault Tree

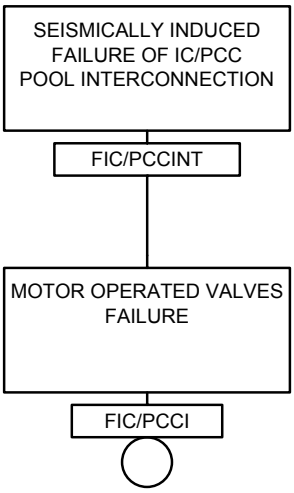

Figure 15-15. PI Seismic Fault Tree

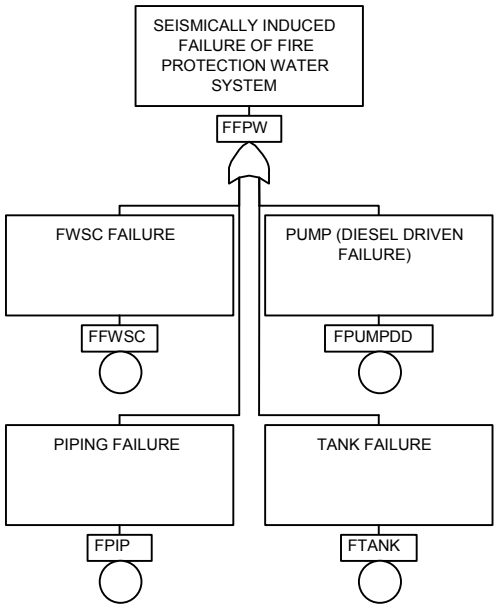

Figure 15-16. FPW Seismic Fault Tree

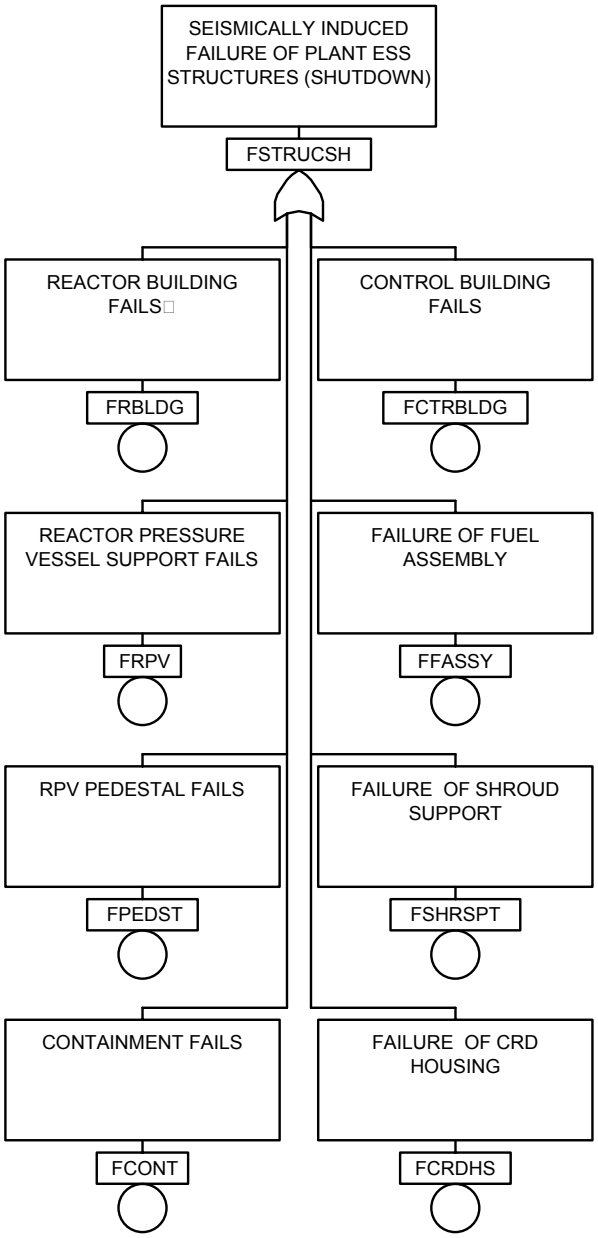

Figure 15-17. Structural Seismic Fault Tree (Shutdown Conditions)

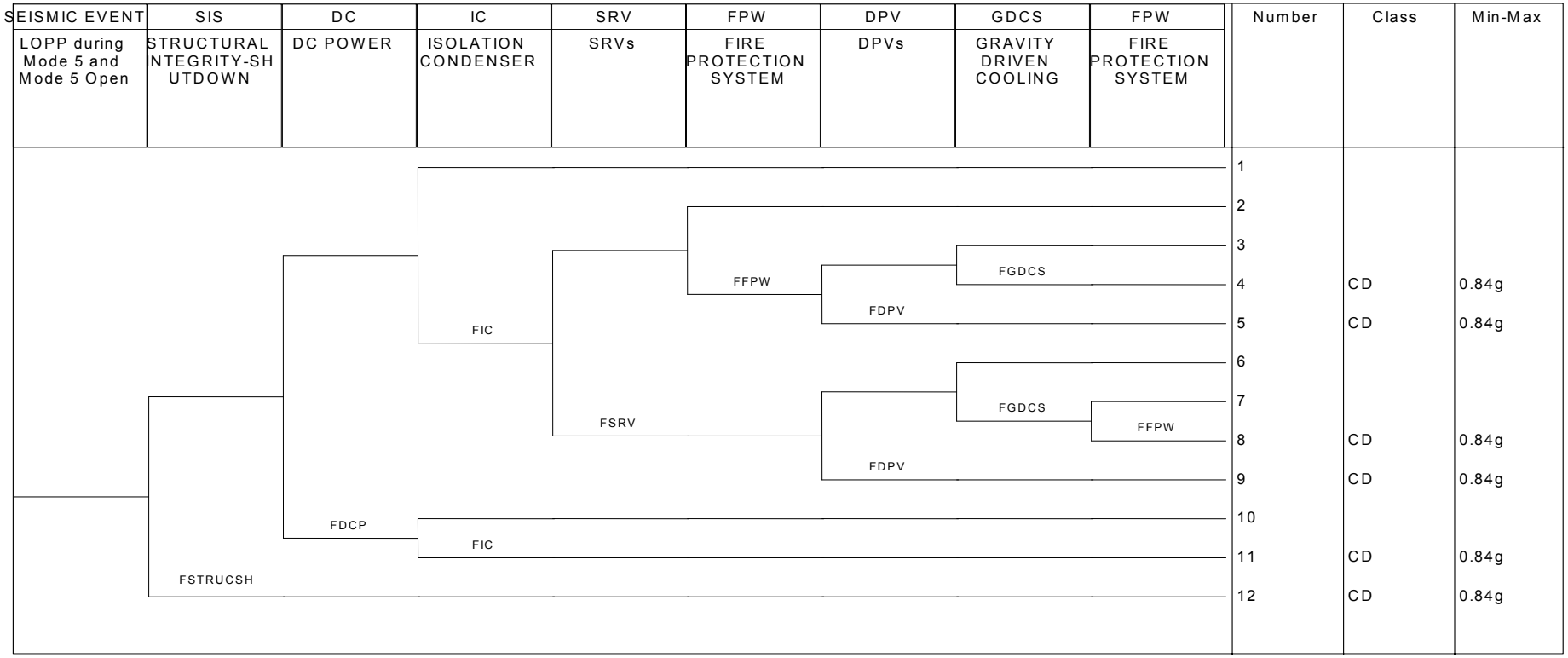

Figure 15-18a. Seismic Event Tree – Shutdown Mode 5 and Mode 5 Open

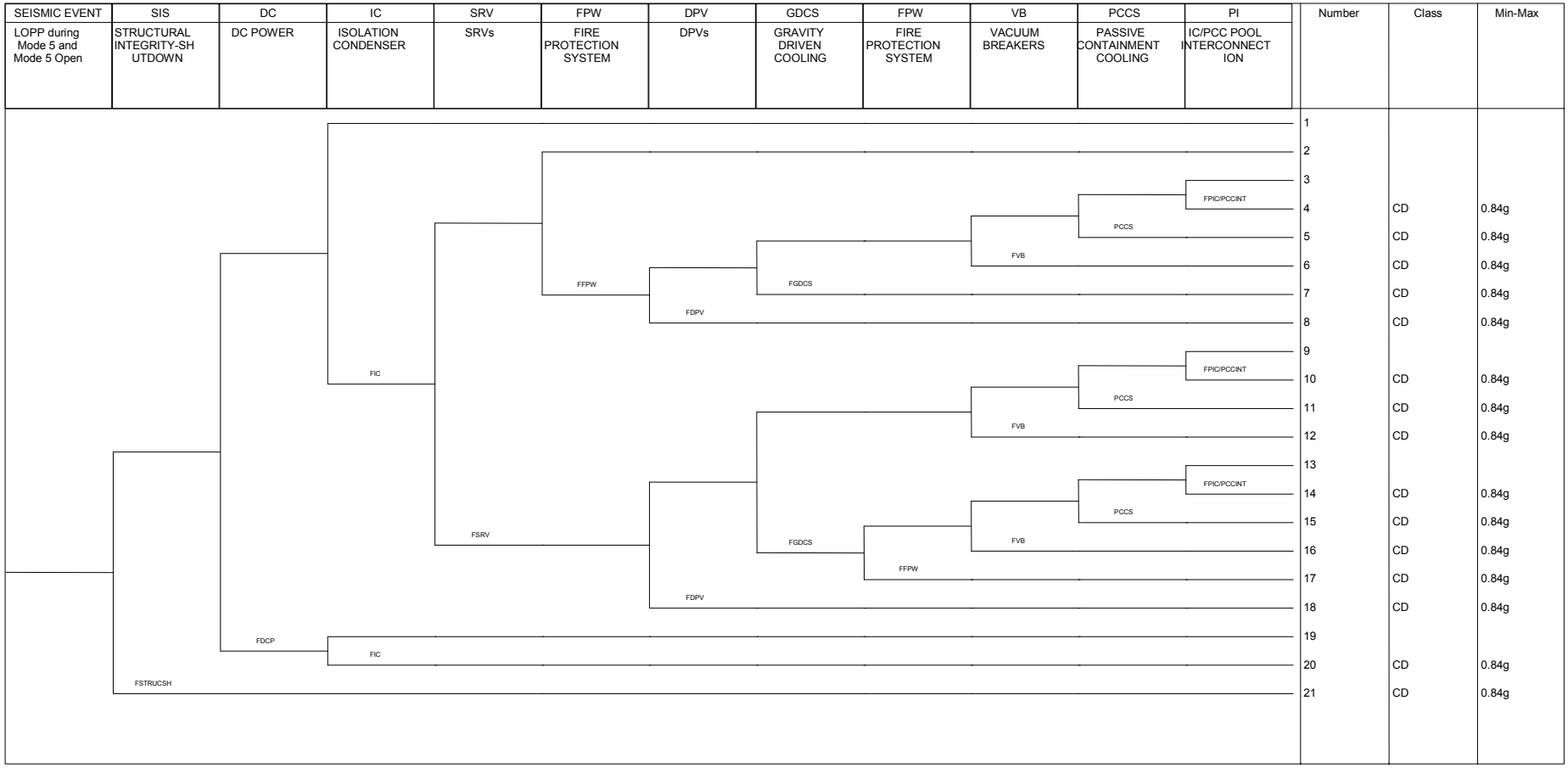

Figure 15-18b. Seismic Event Tree – Shutdown Mode 5 and Mode 5 Open (Sensitivity)

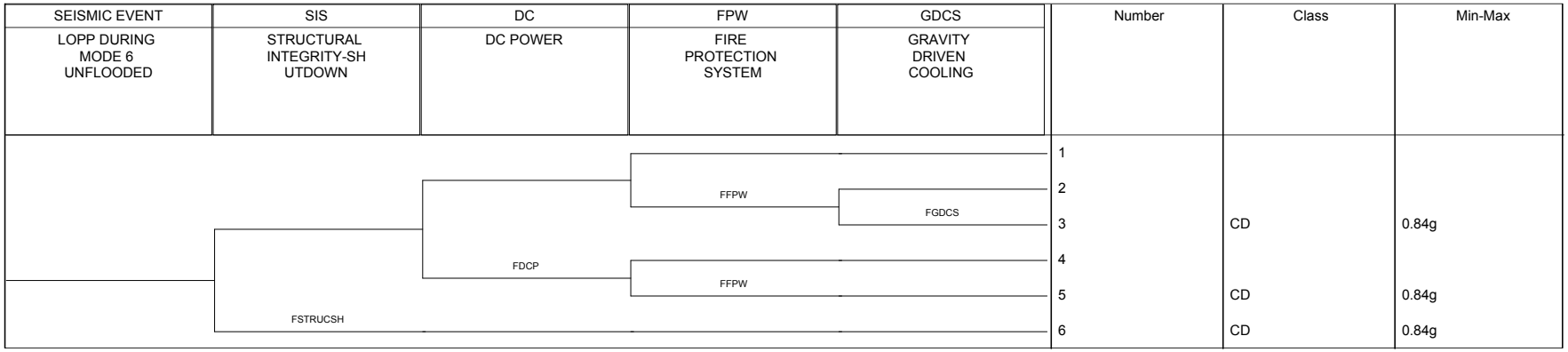

Figure 15-19. Seismic Event Tree – Shutdown Mode 6 Unflooded

SEISMIC EVENT	SIS	Number	Class	Min-Max
LOPP DURING MODE 6 FLOODED	STRUCTURAL INTEGRITY SHUTDOWN			
	FSTRUCSH	1		
		2	CD	0.84g

Figure 15-20. Seismic Event Tree – Shutdown Mode 6 Flooded

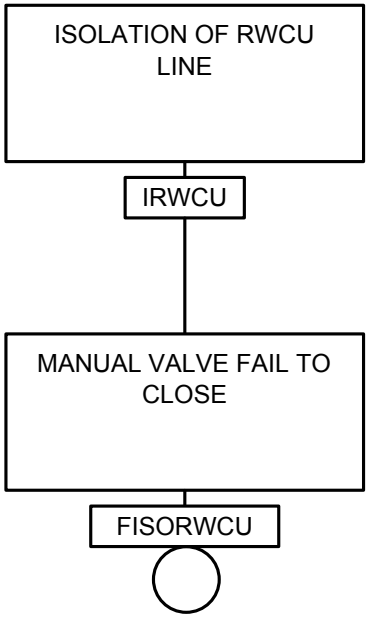

Figure 15-21. BOC In RWCU Line Fault Tree

16 SHUTDOWN RISK

Contents

16.1 INTRODUCTION 16.1-1
16.2 PLANT CONFIGURATIONS IN SHUTDOWN 16.2-1
16.2.1 Definition of Plant Shutdown Configurations 16.2-1
16.2.1.1 Mode 4 – Stable Shutdown 16.2-2
16.2.1.2 Mode 5 – Cold Shutdown 16.2-2
16.2.1.3 Mode 5 Open – Cold Shutdown 16.2-3
16.2.1.4 Mode 6 – Refueling (Unflooded) 16.2-3
16.2.1.5 Mode 6 – Refueling (Flooded) 16.2-4
16.2.2 Mission Time 16.2-4
16.3 INITIATING EVENTS 16.3-1
16.3.1 Shutdown Critical Safety Functions 16.3-1
16.3.1.1 Decay Heat Removal 16.3-1
16.3.1.2 Reactor Coolant System Inventory Control 16.3-3
16.3.2 Identification of Initiating Events 16.3-9
16.3.3 Frequency of Initiating Events 16.3-9
16.3.3.1 Loss of Both Operating RWCU/SDCS Trains 16.3-9
16.3.3.2 Loss of Preferred Power 16.3-10
16.3.3.3 Loss of RCCWS/PSWS 16.3-10
16.3.3.4 RPV Draindown Events 16.3-10
16.3.4 Recovery Actions 16.3-11
16.3.4.1 Recovery of RWCU/SDCS 16.3-12
16.3.4.2 Recovery of RCCWS/PSWS 16.3-13
16.3.4.3 Close Lower Drywell Hatches 16.3-13
16.3.4.4 RPV Draindown Recovery 16.3-14
16.3.4.5 Power Recovery after LOPP 16.3-14
16.4 EVENT TREES 16.4-1
16.4.1 Event Tree Headings 16.4-1
16.4.2 Loss of Decay Heat Removal Event Trees 16.4-5
16.4.2.1 Loss of DHR in Mode 5 or Mode 5 Open 16.4-6
16.4.2.2 Loss of DHR in Mode 6 (Unflooded) 16.4-8
16.4.2.3 RPV Draindown Events (Mode 5, Mode 5 Open) 16.4-9
16.4.2.4 RPV Draindown Events (Mode 6 Unflooded) 16.4-10
16.4.2.5 RPV Draindown Events (Mode 6 Flooded) 16.4-10
16.4.3 Loss of Coolant Accidents 16.4-11
16.4.3.1 Shutdown LOCAs (Mode 5, Mode 5 Open, & Mode 6 Unflooded) 16.4-11
16.4.3.2 LOCA in Mode 6 (Flooded) 16.4-13
16.4.3.3 RWCU Break Outside Containment (Mode 5, Mode 5 Open) 16.4-14
16.4.3.4 RWCU Break Outside Containment (Mode 6 Unflooded) 16.4-14
16.4.3.5 RWCU Break Outside Containment (Mode 6 Flooded) 16.4-15
16.5 SYSTEM ANALYSIS 16.5-1
16.5.1 Reactor Water Cleanup / Shutdown Cooling System 16.5-1
16.5.2 Control Rod Drive System 16.5-1

16.5.3 Gravity Driven Cooling System 16.5-2
16.5.4 Isolation Condenser System 16.5-2
16.5.5 Fuel and Auxiliary Pool Cooling System (FAPCS) 16.5-2
16.5.6 FAPCS – Dedicated LPCI Backup Pump 16.5-3
16.5.7 18/18 SRVs Fail to Open in Relief Mode 16.5-3
16.5.8 MS-TOP2 – At Least 2 SRVs Open 16.5-3
16.5.9 BC-TOPRWCU – Automatic Isolation of RWCU/SDC 16.5-3
16.6 QUANTIFICATION RESULTS 16.6-1
16.6.1 Baseline Shutdown PRA Results 16.6-1
16.6.2 Shutdown Sensitivity 16.6-2
16.6.2.1 LOCA Frequency 16.6-2
16.6.2.2 Lower Drywell Hatch Sensitivity 16.6-2
16.6.2.3 Operator Action Sensitivity 16.6-3
16.6.2.4 RPV Draindown Initiating Event Frequency 16.6-4
16.6.2.5 ICS Operability with elevated water level 16.6-5
16.7 INSIGHTS FROM SHUTDOWN PRA 16.7-1
16.8 CONCLUSIONS 16.8-1
16.9 REFERENCES 16.9-1

List of Tables

Table 16.3-1 Shutdown Initiating Events Challenging Critical Safety Functions 16.3-16
Table 16.3-2a ESBWR Shutdown PRA Initiating Event Types 16.3-17
Table 16.3-2b ESBWR Shutdown PRA Event Trees..... 16.3-18
Table 16.3-3a ESBWR Shutdown PRA Initiating Event Frequencies 16.3-20
Table 16.3-3b ESBWR Initiating Event Frequency Sources 16.3-22
Table 16.3-4 BWR and PWR Loss of Running RHR Pump Events During Shutdown... 16.3-23
Table 16.3-5 Recovery Actions Failure Probabilities 16.3-24
Table 16.3-6 Time Available to Close Lower DW Hatches..... 16.3-25
Table 16.5-1 System Maintenance Unavailabilities During Shutdown 16.5-4
Table 16.6-1 Shutdown CDF by Initiating Event and by Mode of Operation 16.6-6
Table 16.6-2 Shutdown CDF by Accident Class (DELETED) 16.6-7
Table 16.6-3 Internal Events Shutdown PRA Cutset Report 16.6-8
Table 16.6-4 Internal Events Shutdown PRA Importance Measure Report..... 16.6-53
Table 16.6-5 Shutdown PRA Core Damage Sequences..... 16.6-67

List of Figures

Figure 16.2-1. ESBWR Refuel Outage Plan for Shutdown PRA 16.2-5
Figure 16.3-1. RWCU/SDCS Recovery Probability (Cumulative) 16.3-26
Figure 16.3-2a. RPV Small Draindown Recovery 16.3-27
Figure 16.3-2b. RPV Large Draindown Recovery 16.3-28
Figure 16.4-1. Loss of RCCWS/PSWS (Mode 5) 16.4-16
Figure 16.4-2. Loss of Both RWCU/SDCS Trains (Mode 5) 16.4-17
Figure 16.4-3. Loss of Preferred Power (Mode 5) 16.4-18
Figure 16.4-4. Loss of RCCWS/PSWS (Mode 5 Open) 16.4-19
Figure 16.4-5. Loss of Both RWCU/SDCS Trains (Mode 5 Open) 16.4-20
Figure 16.4-6. Loss of Preferred Power (Mode 5 Open) 16.4-21
Figure 16.4-7. Loss of RCCWS/PSWS (Mode 6 Unflooded) 16.4-22
Figure 16.4-8. Loss of Both RWCU/SDCS Trains (Mode 6 Unflooded) 16.4-23
Figure 16.4-9. Loss of Preferred Power (Mode 6 Unflooded) 16.4-24
Figure 16.4-10. LOCA in GDCS Line (Mode 5) 16.4-25
Figure 16.4-11. LOCA in Feedwater Line (Mode 5) 16.4-26
Figure 16.4-12. LOCA above TAF Other than Feedwater or GDCS (Mode 5) 16.4-27
Figure 16.4-13. LOCA below TAF in Instrument Line (Mode 5) 16.4-28
Figure 16.4-14. LOCA below TAF in RWCU/SDC Drain Line (Mode 5) 16.4-29
Figure 16.4-15. LOCA in GDCS Line (Mode 5 Open) 16.4-30
Figure 16.4-16. LOCA in Feedwater Line (Mode 5 Open) 16.4-31
Figure 16.4-17. LOCA above TAF Other than Feedwater or GDCS (Mode 5 Open) 16.4-32
Figure 16.4-18. LOCA below TAF in Instrument Line (Mode 5 Open) 16.4-33
Figure 16.4-19. LOCA below TAF in RWCU/SDC Drain Line (Mode 5 Open) 16.4-34
Figure 16.4-20. LOCA in GDCS Line (Mode 6 Unflooded) 16.4-35
Figure 16.4-21. LOCA in Feedwater Line (Mode 6 Unflooded) 16.4-36
Figure 16.4-22. LOCA above TAF Other than Feedwater or GDCS (Mode 6 Unflooded). 16.4-37
Figure 16.4-23. LOCA below TAF in Instrument Line (Mode 6 Unflooded) 16.4-38
Figure 16.4-24. LOCA below TAF in RWCU/SDC Drain Line (Mode 6 Unflooded) 16.4-39
Figure 16.4-25. LOCA below TAF in Instrument Line (Mode 6 Flooded) 16.4-40
Figure 16.4-26. LOCA Below TAF in RWCU/SDC Drain Line (Mode 6 Flooded) 16.4-41
Figure 16.4-27. RPV Draindown Events (Mode 5) 16.4-42
Figure 16.4-28. RPV Draindown Events (Mode 5 Open) 16.4-43
Figure 16.4-29. RPV Draindown Events (Mode 6 Unflooded) 16.4-44
Figure 16.4-30. RPV Draindown Event (Mode 6 Flooded) 16.4-45
Figure 16.4-31. LOCA – RWCU break outside containment (Mode 5) 16.4-46
Figure 16.4-32. LOCA – RWCU break outside containment (Mode 5 Open) 16.4-47
Figure 16.4-33. LOCA – RWCU break outside containment (Mode 6 Unflooded) 16.4-48
Figure 16.4-34. LOCA – RWCU break outside containment (Mode 6 Flooded) 16.4-49

16 SHUTDOWN RISK

16.1 INTRODUCTION

A detailed PRA is performed to determine the core damage frequency during shutdown. Loss of the Reactor Water Cleanup/Shutdown Cooling System (RWCU/SDCS), Loss of Reactor Component Cooling Water System (RCCWS), Loss of Plant Service Water System (PSWS), and Loss of Preferred Power (LOPP) are all investigated. Additionally, the Core Damage Frequency (CDF) due to drain down of the RPV or Loss of Coolant Accidents (LOCAs) during shutdown is evaluated. Fault trees and event trees are used to determine the shutdown CDF for each event analyzed.

The evaluation encompasses plant operation in cold shutdown and refueling modes (Modes 5 & 6) while Modes 2, 3 and 4 are bounded by the full-power PRA model. This evaluation addresses conditions for which there is fuel in the RPV. It includes all aspects of the NSSS, the containment, and all systems that support operation of the NSSS and containment.

The scope of the Shutdown PRA is that of a Level 1 PRA. The different accident sequences are classified according to whether the core is damaged or not. All shutdown core damage sequences are assumed to lead directly to a release of radionuclides to the environment (containment is assumed to be open at the time of the initiating event).

The critical safety functions essential to the shutdown model are Decay Heat Removal (DHR) and Inventory Control. Since the containment is open for much of the analysis, containment integrity is not relevant to any modeled functions. Reactivity Control and Spent Fuel Pool Cooling are assumed to have no significant impact on the shutdown model. Power availability is modeled for its impact on DHR. LOPP is evaluated as an initiating event, and power dependencies for systems are included in the model.

The following subsections discuss the shutdown PRA modeling methodology, data sources, modeling assumptions, and the results of the data analyses for inclusion in the shutdown PRA model. Shutdown PRA analyses during external events are covered in individual external events Sections 12 (Fire), 13 (Flood) and 14 (High Wind).

16.2 PLANT CONFIGURATIONS IN SHUTDOWN

The differences between the shutdown PRA and the power operation PRA are due to the following:

- Plant operating mode,
- Time after shutdown,
- RPV and containment status,
- Water levels and temperatures,
- Fuel location, and
- Availability of required systems.

This analysis covers the ESBWR risk associated with a refueling outage. The systems modeled are evaluated based on anticipated activities associated with refueling operations.

To develop a suitable shutdown model, multiple bounding plant configurations are defined with similar characteristics in relation to the residual heat, the availability of systems, and the RPV water levels.

The outage plant operating mode is used to define the initial plant condition for individual accident sequence quantification.

Once the outage plant configurations have been defined, the duration of each one is estimated to determine its contribution to the overall calculation of annual core damage frequency. The duration is expressed in hours per refueling outage.

16.2.1 Definition of Plant Shutdown Configurations

The list below shows the Technical Specification definitions of the plant modes. The list is from DCD Tier 2, Chapter 16, Table 1.1-1.

Mode	Title	Reactor Mode Switch Position	Average RCS Temp ◦C (◦F)
(1)	Power Operation	Run	NA
(2)	Startup	Refuel or Startup	NA
(3)	Hot Shutdown	Shutdown	> 215.6 (420)
(4)	Stable Shutdown	Shutdown	≤ 215.6 (420) and > 93.3 (200)
(5)	Cold Shutdown	Shutdown	≤ 93.3 (200)
(6)	Refueling	Shutdown or Refuel	NA

When shutting down the reactor, the transition from Mode 5 to Mode 6 begins when one or more reactor vessel head closure bolts is less than fully tensioned.

The shutdown PRA considers the following outage plant configurations as representative of the possible plant configurations during shutdown.

- Mode 4 (Stable Shutdown) – bounded by full power PRA
- Mode 5 (cold shutdown)
- Mode 5 Open (cold shutdown with containment open)
- Mode 6-Unflooded (refueling)
- Mode 6-Flooded (refueling)

Figure 16.2-1 displays the assumed duration of the different outage plant configurations considered in the ESBWR Shutdown PRA. The following paragraphs describe each of these configurations, detailing the vessel pressure and temperature conditions, as well as the assumed duration for each plant configuration and status of RWCU/SDCS and other DHR systems.

16.2.1.1 Mode 4 – Stable Shutdown

This is the cooldown phase to bring the plant to cold shutdown. The reactor mode switch is in the shutdown position. It begins after control rod insertion is completed. Operation of the reactor mode switch from one position to another bypasses Reactor Protection System trips and channels and automatically alters Neutron Monitoring System trip setpoints in accordance with the reactor conditions implied by the given position of the mode switch (Reference DCD Tier 2, Chapter 7).

Decay and sensible heat are removed through the Main Condenser and/or Isolation Condenser. Approximately one-half hour after control rod insertion, both RWCU/SDCS trains are operating, with the regenerative heat exchangers bypassed and pumps running at reduced speed to avoid exceeding the maximum RCCWS design cold leg temperature. The control rod drive system is in service to provide makeup water for the reactor coolant contraction.

The duration of this mode is assumed to be 8 hours.

Containment is de-inerted but integrity is maintained during this mode.

The initial RPV conditions (pressure and temperature) for Mode 4 are the same as power operating values. A review of the Technical Specifications show that almost all credited systems in the PRA have the same Tech Spec requirements for Modes 1 through 4. The CDF contribution of this mode (as well as Modes 1, 2 & 3) is bounded by the full power PRA.

16.2.1.2 Mode 5 – Cold Shutdown

The Tech Spec defined Mode 5 begins when the Reactor Coolant Temperature drops to or below 93.3ºC (200ºF) while the plant is cooling/shutting down. The ESBWR shutdown PRA treats Mode 5 slightly differently. The defined conditions are the same, but the mode itself is subdivided into two sections, with and without an open containment. ‘Mode 5’ for the shutdown PRA is the portion of the Tech Spec defined mode with the upper drywell head still in place.

This mode occurs twice for each shutdown. It occurs once during cool down, and again after refueling once the reactor head and upper drywell head are replaced before startup.

The total duration of the Tech Spec defined Mode 5 is 240 hours per shutdown. There are 88 hours before refueling and 152 hours between refueling and startup (see Figure 16.2-1). For the shutdown PRA analysis, 192 hours is the assumed duration of Mode 5. The remaining 48 hours are evaluated as Mode 5 Open.

For Mode 5, the reactor mode switch is in the shutdown position. Prior to entering Mode 5 from Mode 4, the heat removal requirements are transferred to the RWCU/SDCS. The Main Condenser and circulating water pumps are removed from service and the use of the isolation condensers is terminated. For the entire duration of Mode 5, all DHR is through the RWCU/SDCS.

Both RWCU/SDCS trains run in parallel, with regenerative heat exchangers bypassed and the pump speed gradually increasing up to the maximum flow rate.

Containment is opened at some time during this mode. The Tech Spec defined mode ends once removal of the reactor head bolts begins. For the shutdown PRA analysis, this mode ends when the upper drywell bolts are removed (which opens containment to the reactor building).

RPV conditions in this mode are assumed to be a pressure of 0.75 MPa (109 psia) and a temperature of 93.3ºC (200ºF). Both values are the assumed high values for temperature and pressure at the transition from Mode 4 to Mode 5.

16.2.1.3 Mode 5 Open – Cold Shutdown

This mode is not a Tech spec defined Mode, and actually includes a period of time from two separate Tech Spec defined Modes. Mode 5 Open is essentially the same as Mode 5 with the exception being that there is no intact containment. The reactor vessel head is still on, but the containment is open.

This analysis assumes that the duration of this mode is approximately 48 hours per refueling outage. That allows for 24 hours to remove the drywell head and the reactor head, and 24 hours to re-attach both after refueling.

Part of the Mode 5 Open period is actually part of the Tech Spec defined Mode 6. According to the Tech Spec mode definitions, Mode 6 begins when one or more reactor vessel head closure bolts is less than fully tensioned. Mode 5 Open sequences consider RPV pressure relief in the model. Mode 6 sequences do not since the RPV head is removed for the majority of the mode. Due to the Tech Spec definition, there is a small period of time that is technically Mode 6, but where the vessel head may still provide a pressure seal. The period of Mode 6 with the vessel head still on is included in the Mode 5 Open event trees and analysis.

16.2.1.4 Mode 6 – Refueling (Unflooded)

In this configuration the reactor head is assumed fully removed, and the reactor well is not flooded. The reactor vessel is open to the reactor building.

As soon as the reactor coolant temperature reaches 49ºC (120ºF), reactor head removal operations may start. Prerequisites required to remove reactor head, such as reactor well drain or drywell head removal occur during the cooldown phase.

DHR is provided by the RWCU/SDCS. At the start of this mode, both trains are expected to be running. Later, only one is required to keep the reactor coolant temperature within limits.

Though the description of this mode uses the word 'unflooded,' the reactor water level is maintained well above the normal level for Modes 1-5. Water level in this mode is maintained near the flange connection for the vessel head to minimize dose in the reactor building. It is only unflooded relative to the refueling water level, which includes flooding up of the reactor well.

The duration of this mode is assumed to be approximately 60 hours, including the period before refueling and the period after refueling.

16.2.1.5 Mode 6 – Refueling (Flooded)

The plant enters this configuration after the reactor well flooding is completed.

DHR is provided by RWCU/SDCS, with only one train running much of the time in this mode. The FAPCS, operating in the reactor well cooling mode, can be used also to cool the reactor. In this mode, water from the reactor well is directed to the FAPCS heat exchanger to ensure adequate cooling of the upper layer of the reactor well water. It is expected that FAPCS operates in this mode 8 hours in every refueling outage.

The duration of Mode 6- Flooded is assumed to be approximately 240 hours (10 days).

In this configuration, the reactor head is removed and the reactor well is flooded.

The RPV is at atmospheric pressure and the reactor coolant temperature is maintained between 54ºC (150ºF) and 51ºC (124ºF). The reactor vessel is assumed to be open to the reactor building.

16.2.2 Mission Time

For the quantification of core damage frequency, the mission time is assumed to be 24 hours. However, the availability of inventories of water and power sufficient to ensure core cooling for longer time periods is also considered.

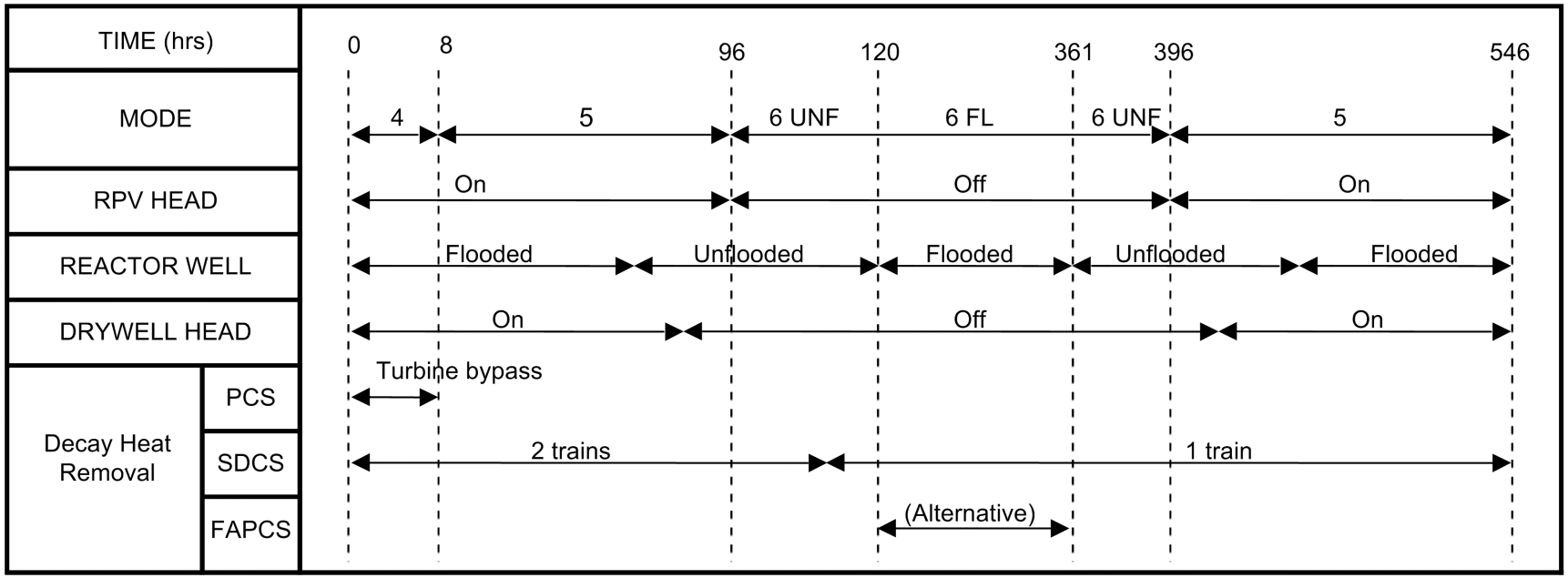

Note: Mode 5 Open is assumed to occur the last 24 hours of Mode 5 before refueling (hours 72-96), and the first 24 hours of Mode 5 following refueling (hours 396-420).

Figure 16.2-1. ESBWR Refuel Outage Plan for Shutdown PRA

16.3 INITIATING EVENTS

The purpose of this subsection is to determine the initiating events that challenge the critical safety functions (e.g., heat removal, inventory control) during shutdown operations. A shutdown initiating event is defined as any event that provokes a disturbance in the stable state of the plant and that requires some kind of action to prevent damage to the core.

Subsection 16.3.1 discusses the shutdown critical safety functions and the shutdown initiating events that challenge these critical safety functions. Subsection 16.3.2 presents the analysis of the initiating events considered in the Shutdown PRA. Frequencies for initiating events are estimated in Subsection 16.3.3 and the recovery actions credited are discussed in Subsection 16.3.4.

16.3.1 Shutdown Critical Safety Functions

The primary critical safety functions accounted for in the Level 1 internal event shutdown evaluation are the following:

- DHR and
- Reactor Coolant System Inventory Control

No explicit treatment is necessary for the remaining critical safety functions for the following reasons:

- Spent fuel cooling: This function will be maintained during shutdown modes just as it will during full power modes. It is assumed to have no significant impact to the shutdown model.
- Reactivity control: All control rods are fully inserted for the duration of the modeled modes. ATWS is not an issue. Reactivity control is assumed to have no significant impact on the shutdown PRA model.
- Power availability: Modeled as it is in the full power model. LOPP is a shutdown initiating event because it leads to a loss of DHR.
- Containment: Containment is open for much of the shutdown model, and it not credited in the model for the time it is maintained. All core damage sequences modeled in the shutdown PRA are assumed to lead to a direct containment bypass.

16.3.1.1 Decay Heat Removal

The DHR function during all shutdown modes of operation is provided by the RWCU/SDCS operating in Reactor Water Cleanup/Shutdown Cooling (RWCU/SDC) mode. In Mode 6 with the reactor well flooded, the Fuel and Auxiliary Pools Cooling System (FAPCS) may be used as an alternative.

At the beginning of every shutdown period, both RWCU/SDCS trains will be running, with pumps varying their speed in order to meet the cooldown rate objectives. Once in Mode 6, before completing reactor cavity flooding, only one train is required.

If the reactor well is flooded (Mode 6-Flooded), the risk associated to loss of DHR has been judged to be negligible because of the following:

- In addition to RWCU/SDCS, FAPCS can be aligned to cool the reactor well water, constituting a valid alternative for RWCU/SDCS, thus reducing the probability of losing the DHR function.
- The large amount of water stored above the core assures core cooling for a long period of time. This time would be significantly longer than 24 hours. This long period could be used to establish an adequate path from an external water source to the reactor well. CRD pumps, FAPCS pumps, dedicated LPCI backup pump, condensate pumps, or firewater pumps could provide this makeup function. The long period of time available makes it practically certain that sufficient inventory can be supplied.

Therefore, the loss of DHR is not analyzed in detail for the case when the reactor well is flooded (Mode 6-Flooded).

For the other shutdown modes (Modes 5 and 6 with the reactor well unflooded), it is assumed that one RWCU/SDCS train is sufficient to remove decay heat to prevent reactor coolant bulk boiling. If RWCU/SDC is malfunctioning such that RPV water level is not maintained at the proper level during normal plant shutdown, the plant remains in the Hot Shutdown or Stable Shutdown mode (Mode 3 or 4). An RWCU/SDC malfunction could cause a loss of the natural circulation cooling path in Mode 5 due to the density change in the cooled water, and thus a lower water level. In this case, the water level within the shroud rises back to above the first stage water spill of the steam separators as the RPV water heats up due to the loss of cooling. This postulated problem is self-correcting.

Given a loss of the natural circulation flow path, fuel integrity is not challenged unless multiple additional failures occur, and the resultant CDF of such sequences would be several orders of magnitude lower than the current estimates, which are already not significant. In Modes 4 and 5, RPV water level is maintained above the first stage water spill of the steam separators to ensure natural circulation through the reactor core. If water level falls below the desired band, the disruption of the core circulation is obvious to operators because the plant would lose the capability to continue the cooldown process. The rise in coolant temperature is indicated in the Main Control Room, as supplied by redundant core inlet temperature sensors located in each Local Power Range Monitor assembly below the core plate elevation. With relatively low decay heat and the large mass of water in the RPV, there is approximately 4 hours to take corrective actions before the water temperature would reach bulk boiling. At that point, there is still ample time to restore decay heat removal and increase coolant inventory so the fuel integrity is maintained.

It is assumed that both RWCU/SDCS trains are running, because the time periods in which only one is running occurs when the reactor well is flooded. Consequently, failure of a single train is not considered an initiating event. The failure of the operator to start the standby RWCU/SDC train is explicitly considered as a risk insight. An important recovery action during shutdown is to recover at least one train after loss of both operating RWCU/SDCS trains. This is the primary method of residual heat removal. In the limiting case of loss of cooling, there are approximately

4 hours before bulk boiling would occur. Therefore, there is ample time to restore RWCU/SDC or its supporting systems, such as Service Water or Reactor Component Cooling Water.

Another risk insight is to ensure that both trains of RWCU/SDC will be available in Modes 5 and 6 until the cavity is flooded. During shutdown conditions, in preparation for refueling, both trains of RWCU/SDC should be running while the unit is in either Mode 5 or Mode 6 until the reactor cavity is flooded.

16.3.1.2 Reactor Coolant System Inventory Control

This critical safety function is defined as maintenance of the RCS inventory at a level sufficient to sustain DHR.

LOCA and RPV draindown events can potentially challenge this critical safety function. They can occur as a result of:

- Random pipe breaks within the RCS (including breaks related to maintenance or refueling operations),
- Misalignment or leaks of systems connected to the RPV, and
- Leakage during FMCRD replacement.

16.3.1.2.1 Pipe breaks

Three different cases are analyzed, depending on whether the reactor vessel head is installed or not, and depending on the status of the containment.

The frequency of these events is expected to be lower than at full power, due to the reduced vessel pressure and temperature. For example, the Grand Gulf Shutdown Study (Reference 16-1) reports that the large LOCA frequency for shutdown events is a factor of ten lower than the frequency for the full power case. LOCA frequencies for the shutdown analysis are estimated by:

- Using the associated frequencies from the Level 1 model,
- Adjusting the value based on the duration of the Mode (time in the mode versus the yearly frequency applied to the Level 1 value), and
- Reducing the value by a factor of ten.

The difference in conditions between at power and shutdown is the primary reason for the frequency reduction. The order of magnitude reduction in LOCA frequency method is borrowed from NUREG/CR-6143, Vol. 2, Part 1 A (Reference 16-2).

Additional basis for the reduction includes:

- Inservice Inspection (ISI) and other pipe failure analyses show leak versus break ratio is likely 100 - 1 or greater for small pipe. Leaks in lines (Instrument & drain lines) would not be LOCA (less than 50 gpm) and would not be initiating event.

- In Intersystem LOCA (ISLOCA) analysis, without RPS pressure, ISLOCA is not credible. During shutdown pressure is significantly less than during power operation.
- Shutdown LOCA frequencies at European plants are calculated using reduction factors to account for lower pressure and temperature. (Reference 16-8)

16.3.1.2.1.1 Pipe Breaks in Mode 6

With the vessel head removed, as long as the RPV water level during normal shutdown operation is maintained above the first stage water spill of the steam separators, it is assumed that natural circulation through the reactor core is ensured and RWCU/SDCS provides adequate core cooling. As such, any break above the first stage water spill of the steam separators during Mode 6 does not constitute a shutdown initiating event, as RWCU/SDCS will continue to ensure normal core cooling and the core will remain covered.

However, if RPV level drops to L3, RWCU/SDCS pumps receive a runback signal, slowing down to cleanup mode flow rate. In addition, once water level in the vessel falls below the first stage water spill of the steam separators, natural circulation is not assured and the core cooling function of RWCU/SDCS may not be adequate. As such, breaks below the first stage water spill of the steam separators are included in the analysis as shutdown initiating events.

Breaks below the first stage water spill of the steam separators are divided into the following two categories: Breaks outside containment and inside containment.

<u>Breaks Outside Containment</u>

Breaks outside containment can originate only in RWCU/SDCS piping, because this is the only system that removes reactor coolant from the containment in Mode 6. The rest of the RPV vessel piping is isolated.

The RWCU/SDCS containment penetrations have redundant and automatic power-operated containment isolation valves that close on signals from the leak detection and isolation system. An additional, diverse non-safety isolation signal of the RWCU/SDCS protects the system in Modes 1-4, but is not required by Tech Specs for shutdown modes. This signal, provided by the Diverse Protection System (DPS), is not credited during Modes 5 and 6.

The RWCU/SDCS return to the feedwater lines are each provided with redundant check valves in series located in the Main Steam Tunnel. A single-power operated isolation valve in each line is located upstream of the check valves and inside the Reactor Building. The FAPCS and CRD connections are downstream of the two check valves. A postulated break in the RWCU/SDCS piping system inside the Reactor Building, which would otherwise allow reactor coolant to flow backwards through main feedwater lines and to spill into the Reactor Building, will be isolated by either redundant RWCU/SDCS check valves or feedwater check valves even if a single failure of one check valve is assumed (see Figures 4.8-1 and 4.9-1 for system arrangement details).

RWCU breaks outside containment are included in this shutdown analysis. The frequency used for the internal events Level 1 model is adjusted to the shutdown duration, and RWCU LOCAs are evaluated for each of the four modeled shutdown modes.

Breaks Inside Containment

For breaks inside containment, coolant flows through the break to the lower drywell. DHR is achieved in this case by allowing reactor coolant boiling and then venting the steam to the atmosphere (i.e., the drywell head is removed in Mode 6). To maintain adequate water level in the vessel, a water supply to the vessel is required.

If a break is located below Top of Active Fuel (TAF), to reach a safe core cooling condition, it is necessary to flood the drywell and the vessel up to a level above the TAF.

The lower drywell is equipped with a personnel hatch and with an equipment hatch to allow access to the containment for personnel and equipment. These hatches are closed during normal operation, but they may be open during refueling. A manual recovery action to close these two hatches is required for successful drywell flooding (see recovery analysis below). The lower drywell hatches are only assumed to be open for extended periods during refueling outages. For extended outages, and outages beyond the scope of refueling, access to the lower drywell is assumed to be severely limited or restricted.

Two different cases are considered for breaks inside containment below TAF during Mode 6:

- Reactor well flooded (Mode 6-Flooded):

  If the reactor well is flooded, the water inventory stored above the core is assumed to be sufficient to flood the drywell and the vessel well above the TAF if the two lower drywell access hatches are closed at the time of the event or they are manually closed before the water level in the drywell reaches the elevation of the hatches.

- Reactor well unflooded (Mode 6-Unflooded):

  If the well is not flooded, the water inventory stored above the core is assumed to be insufficient to cover the core, and additional coolant supply is required

As discussed previously, only pipe breaks below the first stage water spill of the steam separators are considered shutdown Mode 6 initiating events. Therefore, breaks in main steam lines, DPVs, and instrument lines above the first stage water spill of the steam separators are not considered as shutdown initiating events.

Based on the discussions above, and the line breaks identified in Table 2.3-1, the following line break categories are identified as potential shutdown LOCA initiators:

- Feedwater LOCA – As a simplifying and conservative assumption, the entire feedwater LOCA frequency is applied to feedwater Line A in the shutdown analysis. In the internal events analysis, the frequency is evenly split between the two lines (A & B). In the shutdown analysis feedwater line A is the more limiting break. A feedwater Line A break would disable one half of RWCU/SDC and all FAPCS injection. A feedwater Line B break would disable the other half of RWCU/SDC and all of CRD injection.
- GDCS injection line LOCA - This event degrades the passive inventory control system.
- LOCA other than feedwater and GDCS – This is for line breaks above TAF other than GDCS injection or feedwater lines (see Table 16.3-3a, Table 16.3-3b, and Table 2.3-1 for specific lines).

- Instrument Line LOCA below TAF – All LOCAs below TAF during shutdown require closure of lower drywell hatch. The hatch can be opened during shutdown. If a break occurs in the lower drywell and the hatch is not closed, core damage is assumed to occur (once the water level reaches the bottom of the hatch, it is assumed that the door can not be closed and the leak not isolated).
- RWCU/SDC drain line LOCA below TAF. The RWCU/SDC system has drain lines that are below the reactor core. A break in these lines is limiting because it has the potential to drain the vessel to below the fuel. Closure of the lower drywell hatch is required to mitigate this event.
- RWCU/SDC breaks outside containment. These events reduce reactor inventory (possibly to below the TAF) and disable the primary DHR system during shutdown. These breaks require both isolation of the break, as well as some additional core cooling function.

16.3.1.2.1.2 Mode 5 and Mode 5 Open

The same LOCA scenarios modeled for Mode 6 are modeled for Mode 5 with and without an intact containment. Steam Line LOCAs and DPV line LOCAs are assumed to pose negligible risk. The LOCA frequencies for these are lower than GDCS and feedwater, and the resulting LOCAs do not disable any makeup function.

16.3.1.2.2 RPV Draindown events due to Misalignments

The ESBWR design has significantly reduced the number of potential RPV draindown pathways due to postulated system misalignment during shutdown conditions.

In particular, as compared to Residual Heat Removal System in current BWRs, the RWCU/SDCS in the ESBWR does not have the potential for diverting RPV inventory to the suppression pool through the SP suction, return, or spray lines. RWCU/SDCS does not provide any drywell spray function, so the potential RPV draindown through drywell spray does not exist. In addition, the absence of recirculation lines in the ESBWR design further reduces the potential RPV draining paths.

The only operating system that has the potential to drain the RPV during this mode of shutdown is RWCU/SDCS. This system is connected to the RPV during shutdown and it is used to discharge excess reactor coolant to the main condenser or to the radwaste system during startup, shutdown and hot standby conditions.

An evaluation of system pipe drawings showed two potential draindown paths due to misalignment upstream of the isolation valves. Both lines have 20 mm (0.79 inches) diameters and are assumed to be too small to be considered an initiating event. All other potential drain paths are downstream of the system's isolation valves. Any flow diversion or leak will likely be automatically isolated by the system. RWCU/SDC will get an isolation signal on flow mismatch or RPV low level.

RPV leaks or flow diversion events are evaluated for all modeled modes. The source of the initiating event frequency for shutdown leak/diversion events (EPRI 100311. "An Analysis of Loss of Decay Heat Removal Trends and. Initiating Event Frequencies (1989–2000)") was thoroughly reviewed. The EPRI derived initiating event frequency for RPV leaks or diversion is

2.80E-5 per hour. The events in 'Table A-2 BWR Shutdown Initiating Events (1989-2000)' used to develop the leak/diversion initiating event frequency were evaluated to determine which are applicable to the ESBWR design. Very few of either the large drain events (greater than 10,000 gallons) or small drain events (less than 10,000 gallons) in the referenced table are relevant based on the design differences between existing BWRs and the ESBWR.

The initiating event frequency for RPV leak/diversion events used in this analysis is 1.0E-5 per hour. This number is approximately one third of the number developed in the reference. The smaller value for leak frequency for the ESBWR is based on a detailed review of the system piping, and a review of the events used to develop the EPRI frequency. The only system a leak or diversion event can impact the ESBWR during shutdown is the RWCU/SDCS. A review of the system P&ID's shows several system features that work to prevent significant leak/diversion events. There are very few systems or piping segments connected to the RWCU system to provide a path for a leak. The piping sections that are attached to the system that could cause a leak or diversion are almost all much smaller than the primary system piping (most connections are smaller than 50.8 mm (2 inches) in diameter and the primary RWCU header is 304.8 mm (12 inches) in diameter. Additionally, most of the diversion paths that do exist have two normally closed manual valves on the path to further prevent an unwanted flow path from inadvertently opening. These listed system features support the use of a smaller initiating event frequency for RPV leaks during shutdown. Though the EPRI developed value is very conservative and may not be applicable to ESBWR design. However, the results section includes a sensitivity study to show the shutdown PRA results with 2.8E-5 per hour value.

16.3.1.2.3 FMCRD replacement

Draining the RPV during FMCRD maintenance has been evaluated, but is not considered a shutdown PRA initiating event. With the tools used for the actions, and the controls in place to monitor the evolution, the chance of a significant RPV leak due to the activity is assumed to be negligible.

The procedure for removal of the FMCRD for maintenance or replacement is similar to previous BWR product lines. The control rod is first withdrawn to the full-out position. During removal of the lower housing (spool piece) following removal of the position indicator probes and motor unit, the control rod backseats onto the control rod guide tube. This metal-to-metal contact provides the seal that prevents draining of reactor water when the FMCRD is subsequently lowered out of the CRD housing. The control rod normally remains in this backseated condition at all times with the FMCRD out; however, in the unlikely event it also has to be removed, a temporary blind flange is first installed on the end of the CRD housing to prevent draining of reactor water.

If the operator inadvertently removes the control rod after FMCRD is out without first installing the temporary blind flange, or conversely, inadvertently removes the FMCRD after first removing the control rod, an un-isolable opening in the bottom of the reactor is created, resulting in drainage of reactor water. The possibility of inadvertent reactor drain-down by this means is considered remote for the following reasons:

- Procedural controls similar to those of current BWRs provide the primary means for prevention. Current BWR operating experience demonstrates this to be an acceptable

approach. There has been no instance of an inadvertent drain-down of reactor water due to simultaneous CRD and control rod removal.

- During drive removal operations, personnel are required to monitor under the RPV for water leakage out of the CRD housing. Abnormal or excessive leakage occurring after only a partial lowering of the FMCRD within its housing indicates the absence of the full metal-to-metal seal between the control rod and control rod guide tube required for full drive removal. In this event, the FMCRD can then be raised back into its installed position to stop the leakage and allow corrective action.

The COL applicant shall develop maintenance procedures with provisions to prohibit coincident removal of the control rod and CRD of the same assembly. In addition, the COL applicant shall develop contingency procedures to provide core and spent fuel cooling capability and mitigative actions during CRD replacement with fuel in the vessel.

The FMCRD design also allows for separate removal of the motor unit, position indicator probe (PIP), separation indicator probe (SIP) and spool piece for maintenance during plant outages without disturbing the upper assembly of the drive. While these FMCRD components are removed for servicing, the associated control rod is maintained in the fully inserted position by one of two mechanical locking devices that prevent rotation of the ball screw and drive shaft.

The first anti-rotation device is engaged when the motor unit consisting of the induction motor, reduction gear, brake and position signal detector is removed. It is a spring-actuated locking cam located on the bottom of the spool piece. When the motor unit is lowered away from the spool piece, the locking cam is released from its normally retracted position and engaged by spring force with gear teeth on the bottom of the magnetic coupling outer rotor, thereby locking the shaft in place.

With the motor unit removed, the locking cam can be visually checked from below the drive to verify that it is properly engaged. When the vessel head is removed, another means of verification of proper locking is for the operator to view the top of the control rod from over the reactor vessel. If the top of the control rod is visible at its normal full in position, it provides both direct indication that the control rod remains fully inserted and additional assurance that the ball screw is restrained from reverse rotation. The drive shaft remains locked in this manner until the motor unit is reattached to the spool piece. During motor installation, a release pin on the motor unit pushes up a plunger linked to the locking cam as the motor unit is raised into contact with the spool piece. The release pin forces the locking cam away from the teeth on the bottom of the magnetic coupling outer rotor and into the normally retracted, unlocked position.

The second anti-rotation device is engaged when the spool piece is removed from the FMCRD. As described in DCD Tier 2, Subsection 4.6.2.1.3, this device is a spline arrangement between the ball screw lower coupling and the middle flange backseat. When removing and lowering the spool piece, the weight of the ball screw, hollow piston and control rod provides a vertical force in the downward direction that brings the two splines together. This locks the ball screw into the backseat and prevents reverse rotation. As with the first anti-rotation device, proper engagement of this device can be visually checked from below the drive. If the splines do not completely lock together, there is indication of this because the ball screw does not seat against the backseat and there is a small gap for leakage of water. If this should occur, removal of the spool piece can be discontinued and corrective action taken. If there is no leakage, it confirms that the splines

are properly locked together. Also as in the case of the first anti-rotation device, visual observation of the top of the control rod from over the reactor vessel provides another means for verifying proper locking of the ball screw. The ball screw remains locked in this position until the spool piece is reattached to the FMCRD. During spool piece installation, the end of the drive shaft fits into a seat on the end of the ball screw. As the ball screw piece is raised off the middle flange backseat, the anti-rotation splines disengage and the weight of the ball screw, hollow piston and control rod is transferred to the spool piece assembly.

16.3.2 Identification of Initiating Events

The identification of the shutdown initiating events for inclusion in the ESBWR shutdown risk assessment is based on:

- Review of past shutdown PRAs,
- Review of the ESBWR full power PRA initiators, and
- Consideration of the ESBWR design and configuration during shutdown.

The potential initiator scenarios are described in Subsection 16.3.1. The resulting list of initiating event types during shutdown (and as a function of critical safety function) is presented in Tables 16.3-1 and 16.3-2a. The shutdown initiators and their associated event trees are listed in Table 16.3-2b.

16.3.3 Frequency of Initiating Events

Initiating event frequencies are quantified based on a review of BWR operating experience as well as ESBWR specific evaluations.

16.3.3.1 Loss of Both Operating RWCU/SDCS Trains

The main components of the system are the pumps, heat exchangers, demineralizers, valves and piping.

The RWCU/SDCS is connected to nonsafety-related standby AC power (diesel generators) allowing it to perform its reactor cooling function when the preferred power source is not available.

In addition to AC power, RWCU/SDCS requires the operation of the RCCWS and the PSWS in order to remove decay heat.

The unavailability of the RWCU/SDCS can occur for the following general reasons:

- Failure of both RWCU/SDCS trains.
- Isolation of the RWCU/SDCS, caused by RPV low level (Level 3 causes RWCU/SDCS pump runback and Level 2 causes loss of suction pressure), SLCS initiation, LD&IS signals, high temperature in main steam tunnel or high system flow.
- LOPP.
- Loss of RCCWS or PSWS.

The Loss of RWCU/SDCS shutdown initiating event is defined by failure of both trains, either due to RWCU/SDCS component failures or by automatic closure of isolation valves. LOPP and Loss of RCCWS/PSWS are modeled as separate shutdown initiating events.

Automatic closure of RWCU/SDCS isolation valves can be initiated by the following signals:

- High RWCU/SDCS flow,
- Low reactor water level (Level 2),
- High temperature in main steam tunnel,
- Leak Detection and Isolation System signals that indicate a break in the RWCU system, and
- Standby Liquid Control System operating.

ESBWR logic design uses four divisions of power backed up by safety-related batteries. Therefore, loss of power to the logic is highly unlikely. Three divisional logic power supply failures are required to initiate the SDC isolation; as such, this RWCU/SDC failure mode is non-significant compared to loss of support systems or mechanical failures.

The initiating frequency for loss of RWCU/SDCS is calculated from a combination of several common cause failures in the RWCU/SDC logic. The events contributing to the Loss of RWCU/SDC are listed in Table 16.3-1.

16.3.3.2 Loss of Preferred Power

LOPP may happen as a result of severe weather, grid failures or switchyard faults.

The LOPP shutdown initiator frequency is calculated using the loss of offsite power during shutdown data documented in NUREG/CR-5496. (Reference 16-2)

16.3.3.3 Loss of RCCWS/PSWS

This initiating event is the loss of the RCCWS or the loss of the PSWS supporting the RWCU/SDCS operating in shutdown cooling mode. This initiating event poses a DHR challenge and renders the RWCU/SDCS unavailable.

The frequency of this initiator is based on the Loss of PSWS initiating event frequency calculated for the at-power PRA.

16.3.3.4 RPV Draindown Events

This initiating event occurs when the reactor inventory is reduced through a leak or flow diversion event (non-LOCA). Due to the ESBWR design, only the RWCU system or systems attached to it can cause an RPV drain event during shutdown modes. This event challenges both RPV inventory and DHR. Shutdown LOCA Events

The following LOCA initiators are quantified in the shutdown PRA:

- Mode 5
  - LOCA in GDCS injection line
  - LOCA in FW-A

  - LOCA other than FW or GDCS
  - LOCA below TAF in RWCU/SDC drain lines
  - LOCA below TAF in instrument lines
  - RWCU break outside containment
- Mode 5 Open
  - LOCA in GDCS injection line
  - LOCA in FW-A
  - LOCA other than FW or GDCS
  - LOCA below TAF in RWCU/SDC drain lines
  - LOCA below TAF in instrument lines
  - RWCU break outside containment
- Mode 6 Unflooded
  - LOCA in GDCS injection line
  - LOCA in FW-A
  - LOCA other than FW or GDCS
  - LOCA below TAF in RWCU/SDC drain lines
  - LOCA below TAF in instrument lines
  - RWCU break outside containment
- Mode 6 Flooded
  - LOCA below TAF in RWCU/SDC drain lines
  - LOCA below TAF in instrument lines
  - RWCU break outside containment

The shutdown LOCA frequencies are based on the at-power RCS line break frequencies (refer to Chapter 2, Table 2.3-1). The at-power RCS line break frequencies are reduced by a factor of 10 for the shutdown PRA to reflect the low pressure and temperature during shutdown conditions.

16.3.4 Recovery Actions

This section documents the calculation of time-dependent, post-initiator recovery probabilities used in the ESBWR Shutdown PRA. The recovery events addressed in this section are those that terminate or mitigate the initiating event before a safety function is challenged. Unlike at full-power conditions, during shutdown modes extended time can be available to terminate the initiating event. This justifies the quantification of recovery possibilities.

Recovery events are analyzed for the following initiating events:

- Loss of both operating RWCU/SDCS trains: Operators recover at least one of the two failed trains.
- Loss of RCCWS/PSWS: Operators recover the failed equipment.
- LOCA Below TAF (Mode 6): Operators close the two lower drywell hatches if they are open.
- RPV draindown events: Operators identify and isolate the leak or flow diversion.

The analysis of these events is performed using the BWR industry data from References 16-3, 16-4, 16-5,16-6, and 16-9. Industry data is included here based on operating experience in Modes 5 and 6.

The operating experience events in each category are analyzed to determine the time elapsed before the initiating event was terminated. Because of the limited data for extended durations, an additional assumed event with a recovery time of 20 hours is added to all distributions.

It is then assumed that the time to recovery is a random variable following a lognormal probability density distribution. The operating experience recovery events are listed in Table 16.3-4, and the distribution from the data is shown in Figure 16.3-1.

Figures 16.3-2a and 16.3-2b show two charts from reference 16-9 (EPRI 1003113). The charts show the recovery probability distributions for small and large draindown events.

16.3.4.1 Recovery of RWCU/SDCS

The most functionally similar system to RWCU/SDCS in current BWRs is the Residual Heat Removal system.

Events involving the loss of a running RHR pump at BWRs are identified from References 16-3, 16-4 and 16-5, and are shown in Table 16.3-4. However, due to the lack of BWR events specifying the duration, PWR events (see Reference 16-6) are also used in the recovery analysis, excluding those occurring during reduced inventory conditions. Using the methodology described above, the lognormal distribution parameters m and s are determined to be 2.73 and 2.08, respectively. The resulting recovery probability curve as a function of time for the Loss of RWCU/SDCS initiator is provided in Figure 16.3-1.

Based on the most limiting Mode 5 conditions, the time to boil following a loss of DHR (loss of RWCU/SDC) would be approximately 4 hours. This time does not account for the time following boiling for level to drop to the first stage water spill of the steam separators. This time is based on a bounding estimate of the decay heat at Mode 5 and the specific configuration of the ESBWR vessel and internals. The analysis assumed the following conditions at the moment DHR was lost:

- Temperature of 93.3°C (200°F) – Mode 5 maximum temperature
- Atmospheric pressure at 14.7 psia – minimum Mode 5 pressure during or immediately prior to vessel head removal
- Decay heat at 3.89E7 Watts – decay heat 5.3 hours after shutdown. Mode 5 is not likely to begin until at least 8 hours following shutdown.

- Normal water level – water level will be gradually increased during Mode 5 up to the vessel head flange. This level is likely the minimum water level for all of Mode 5.

The same calculation also estimates the time to boil for Mode 6 Unflooded conditions. This analysis estimates the time to boil for the most limiting conditions of Mode 6 is approximately 5.7 hours.

Therefore, the following time estimates are used in the analyses:

- For Mode 5, the time available for operators to recover RWCU/SDC is 4 hours.
- For Mode 6-Unflooded, the available time is 5.7 hours.

These two time estimates are also included on the graph in Figure 16.3-1. A vertical line on the 'time' axis at each value has been added to the plot. Both lines intercept the operating experience distribution for SDC recovery between the 0.8 and 0.9 values on the recovery axis. This establishes that recovery of RWCU/SDC for the ESBWR during shutdown is likely between 80% and 90% successful given the estimated times. Or, that the failure to recover shutdown cooling has a failure rate of 0.2 or less.

The previous revision of the ESBWR internal events shutdown PRA estimated the failure to recover RWCU/SDC probabilities to be 0.229 for Mode 5 and 0.218 for Mode 6. This revision of the shutdown model retains these failure rates for the recovery actions. The numbers are relatively close to what the updated analysis estimates. The new estimates have a slightly lower failure probability, so use of the old values remains conservative.

The non-recovery probabilities for these two cases are shown in Table 16.3-5.

16.3.4.2 Recovery of RCCWS/PSWS

The RCCWS and PSWS are used during shutdown to remove decay heat and other heat loads. The main components in the system are pumps and heat exchangers. It is assumed that the time to recover from a Loss of RCCWS/PSWS shutdown initiator follows the same probability density distribution as the time to recover the RWCU/SDCS.

The allowable time frame for recovery is taken to be the same as that for Loss of RWCU/SDCS.

- For Mode 5, the available time is 4 hours.
- For Mode 6-Unflooded, the available time is 5.7 hours.

The non-recovery probabilities for these two cases are shown in Table 16.3-5.

16.3.4.3 Close Lower Drywell Hatches

An equipment hatch for removal of equipment during maintenance and an air lock for entry of personnel are provided in both the lower and upper drywell. These access openings are sealed under normal plant operation but are opened when the plant is shut down for refueling. Credit is not given for closing the doors after reactor coolant overflows through the hatches. Therefore, the time available for closing both hatches depends on the volume of the lower drywell under the bottom edge of the hatches, on the size of the break, and on the water level in the vessel or reactor well above the break.

This action is required for the LOCA below TAF initiators during shutdown. These LOCAs involve breaks in the RWCU/SDC drain lines and instrument lines.

The flow through the break is assumed constant and equal to $S\sqrt{2gh}$, where S is the break area, h is the height of water above the break, and g is the acceleration due to gravity.

Both break locations, in RWCU/SDCS drain lines and instrument lines are evaluated. The calculation assumes the reactor well is not flooded at the time of the break. Table 16.3-6 summarizes the calculation.

Detection of the event will be immediate if personnel are present in the lower drywell. If this is not the case, it is assumed that an alarm on drywell sump high level is available in the control room.

Closure of the lower drywell hatches is covered in the Availabilities Control Manual (ACM). The ability to close the hatch is covered for shutdown, and immediate action is required if hatch closure is unavailable for any reason. The ACM states, "ACLCO 3.6.2 - The lower drywell personnel air lock and lower drywell equipment hatch shall be AVAILABLE for closure. APPLICABILITY: MODES 5 and 6, during operations with a potential for draining the reactor vessel."

Once the event has been detected, the plant operator must correctly diagnose the situation, make the decision to close the hatches, gain access to elevation –6400 mm in the reactor building, and manually close the equipment hatch and the personnel air lock. It is assumed that during the outage, personnel will be continuously located in the area of the doors.

Probabilities of 1.0E-1 and 1.0E-2 are assigned for failing to close the DW hatches for breaks in RWCU/SDCS drain lines and instrument line breaks, respectively. The results section includes multiple sensitivity analyses with various failure probabilities for the hatch closure events.

16.3.4.4 RPV Draindown Recovery

Figures 16.3-2a and 16.3-2b show two charts from reference 16-9 (EPRI 1003113). The charts show the recovery probability distributions for small and large draindown events. Most of the credible paths for a leak attached to the RWCU system are made up of small piping with a diameter less than 101.6 mm (4inches). Due to this, the small draindown recovery curve is likely the more applicable leak recovery distribution. However, due to uncertainty in final design and performance, a conservative value for leak recovery will be used. A screening value of 0.5 (one failure in two) is used for the failure to identify and isolate leak.

16.3.4.5 Power Recovery after LOPP

Recovery from this initiating event implies that the offsite AC power has been restored. Following restoration of offsite power, operator action to align the systems participating in the DHR function is assumed to be required.

NUREG/CR-6890 distinguishes four types of LOPP event categories: plant centered, switchyard centered, grid related, and weather related. In addition, these events were subdivided into results for critical and shutdown operation.

The allowable time frame for recovery is taken to be the same as that for Loss of RWCU/SDCS. For Modes 4 and 5, the available time is 4.0 hours. For Mode 6-Unflooded, the available time is 5.7 hours. The corresponding shutdown LOPP recovery failure probabilities are conservatively determined by the probabilities of exceedance values for the restoration of offsite power at time of 4 hours and 5 hours. The values are determined to be 1.34E-1 (for mode 5) and 9E-2 (for mode 6 unflooded) based on the actual data for shutdown operation in NUREG/CR-6890 V1, "Reevaluation of Station Blackout Risk at Nuclear Power Plants", Table 4-1, Probability of exceedance versus duration curve fits and summary statistics. The resulting LOPP non-recovery probabilities are shown in Table 16.3-5.

Table 16.3-1

Shutdown Initiating Events Challenging Critical Safety Functions

Critical Safety Function	Initiating Event
Decay Heat Removal	Loss of Both RWCU/SDCS trains
	Loss of Preferred Power
	Loss of RCCWS/PSWS
Reactor Coolant System Inventory Control (Modes 5 and 6)	GDCS LOCA
	Feedwater LOCA
	LOCA other than GDCS or feedwater
	Instrument Line LOCA below TAF
	RWCU drain line below TAF
	RPV Draindown Events
	RWCU LOCA – Outside Containment

Table 16.3-2a

ESBWR Shutdown PRA Initiating Event Types

Initiating Event	Applicable Modes
Loss of Both Operating RWCU/SDCS Trains	5,5O, 6U
Loss of Preferred Power	5, 5O, 6U
Loss of RCCWS/PSWS	5, 5O, 6U
LOCA in GDCS Line	5, 5O, 6U
LOCA in FW-A Line	5, 5O, 6U
LOCA other than GDCS/FW	5, 5O, 6U
LOCA Below TAF in RWCU/SDC Drain Lines	All
LOCA Below TAF in Instrument Lines	All
RPV Draindown Events	All
RWCU LOCA – Outside Containment	All
Mode Descriptions 5 – Mode 5 5O – Mode 5 Open 6U – Mode 6 Unflooded 6F- Mode 6 Flooded	

Table 16.3-2b
ESBWR Shutdown PRA Event Trees

Event Tree / Initiating Events	Mode	Figure
Loss of PSWS	5	16.4-1
Loss of RWCU/SDC	5	16.4-2
Loss of Pref Power	5	16.4-3
Loss of PSWS	5 open	16.4-4
Loss of RWCU/SDC	5 open	16.4-5
Loss of Pref Power	5 open	16.4-6
Loss of PSWS	6 Unflooded	16.4-7
Loss of RWCU/SDC	6 Unflooded	16.4-8
Loss of Pref Power	6 Unflooded	16.4-9
LOCA - RWCU/SDC below TAF	5	16.4-10
LOCA - Other than FW or GDCS	5	16.4-11
LOCA - FW Line A	5	16.4-12
LOCA - Instrument Line below TAF	5	16.4-13
LOCA - GDCS	5	16.4-14
LOCA - RWCU/SDC below TAF	5 open	16.4-15
LOCA - Other than FW or GDCS	5 open	16.4-16
LOCA - FW Line A	5 open	16.4-17
LOCA - Instrument Line below TAF	5 open	16.4-18
LOCA - GDCS	5 open	16.4-19
LOCA - RWCU/SDC below TAF	6 Unflooded	16.4-20
LOCA - Other than FW or GDCS	6 Unflooded	16.4-21
LOCA - FW Line A	6 Unflooded	16.4-22
LOCA - Instrument Line below TAF	6 Unflooded	16.4-23
LOCA - GDCS	6 Unflooded	16.4-24
LOCA - Instrument Line below TAF	6 Flooded	16.4-25
LOCA - RWCU/SDC below TAF	6 Flooded	16.4-26
RPV Draindown Events (Leak or Flow Diversion)	5	16.4-27
RPV Draindown Events (Leak or Flow Diversion)	5 open	16.4-28
RPV Draindown Events (Leak or Flow Diversion)	6 Unflooded	16.4-29

Table 16.3-2b
ESBWR Shutdown PRA Event Trees

Event Tree / Initiating Events	Mode	Figure
RPV Draindown Events (Leak or Flow Diversion)	6 Flooded	16.4-30
LOCA – RWCU break outside containment	5	16.4-31
LOCA – RWCU break outside containment	5 open	16.4-32
LOCA – RWCU break outside containment	6 Unflooded	16.4-33
LOCA – RWCU break outside containment	6 Flooded	16.4-34

Table 16.3-3a

ESBWR Shutdown PRA Initiating Event Frequencies

Initiating Events	Mode	Value	Units	Source	Value/hour	Hours in Mode	per shutdown value	Yearly value (0.5 shutdowns/year)	Values with LOCA correction
Loss of PSWS	5	9.70E-04	events/year	1	1.11E-07	192	2.13E-05	**1.06E-05**	
Loss of RWCU/SDC	5	3.15E-5	/hour	3	3.15E-5	192	6.55E-3	**3.02E-03**	
Loss of Pref Power	5	2.20E-05	/hour	2	2.20E-05	192	4.22E-03	**2.11E-03**	
Loss of PSWS	5 open	9.70E-04	events/year	1	1.11E-07	48	5.32E-06	**2.66E-06**	
Loss of RWCU/SDC	5 open	3.15E-5	/hour	3	3.15E-5	48	1.51E-3	**7.56E-04**	
Loss of Pref Power	5 open	2.20E-05	/hour	2	2.20E-05	48	1.06E-03	**5.28E-04**	
Loss of PSWS	6 unflooded	9.70E-04	events/year	1	1.11E-07	60	6.64E-06	**3.32E-06**	
Loss of RWCU/SDC	6 unflooded	3.15E-5	/hour	3	3.15E-5	60	1.89E-3	**9.45E-04**	
Loss of Pref Power	6 unflooded	2.20E-05	/hour	2	2.20E-05	60	1.32E-03	**6.60E-04**	
LOCA - RWCU/SDC below TAF	5	6.51E-06	events/year	5	7.43E-10	192	1.43E-07	7.13E-08	**7.13E-09**
LOCA - Other than FW or GDCS	5	1.68E-04	events/year	8	1.92E-08	192	3.68E-06	1.84E-06	**1.84E-07**
LOCA - FW Line A	5	1.10E-05	events/year	6	1.26E-09	192	2.41E-07	1.21E-07	**1.21E-08**
LOCA - Instrument Line below TAF	5	2.14E-04	events/year	4	2.44E-08	192	4.69E-06	2.35E-06	**2.35E-07**
LOCA - GDCS	5	1.27E-05	events/year	7	1.45E-09	192	2.78E-07	1.39E-07	**1.39E-08**
LOCA - RWCU/SDC below TAF	5 open	6.51E-06	events/year	5	7.43E-10	48	3.57E-08	1.78E-08	**1.78E-09**
LOCA - Other than FW or GDCS	5 open	1.68E-04	events/year	8	1.92E-08	48	9.21E-07	4.60E-07	**4.60E-08**
LOCA - FW Line A	5 open	1.10E-05	events/year	6	1.26E-09	48	6.03E-08	3.01E-08	**3.01E-09**
LOCA - Instrument Line below TAF	5 open	2.14E-04	events/year	4	2.44E-08	48	1.17E-06	5.86E-07	**5.86E-08**
LOCA - GDCS	5 open	1.27E-05	events/year	7	1.45E-09	48	6.96E-08	3.48E-08	**3.48E-09**
LOCA - RWCU/SDC below TAF	6 unflooded	6.51E-06	events/year	5	7.43E-10	60	4.46E-08	2.23E-08	**2.23E-09**
LOCA - Other than FW or GDCS	6 unflooded	1.68E-04	events/year	8	1.92E-08	60	1.15E-06	5.75E-07	**5.75E-08**
LOCA - FW Line A	6 unflooded	1.10E-05	events/year	6	1.26E-09	60	7.53E-08	3.77E-08	**3.77E-09**

Table 16.3-3a

ESBWR Shutdown PRA Initiating Event Frequencies

Initiating Events	Mode	Value	Units	Source	Value/hour	Hours in Mode	per shutdown value	Yearly value (0.5 shutdowns/year)	Values with LOCA correction
LOCA - Instrument Line below TAF	6 unflooded	2.14E-04	events/year	4	2.44E-08	60	1.47E-06	7.33E-07	**7.33E-08**
LOCA - GDCS	6 unflooded	1.27E-05	events/year	7	1.45E-09	60	8.70E-08	4.35E-08	**4.35E-09**
LOCA - Instrument Line below TAF	6 Flooded	2.14E-04	events/year	4	2.44E-08	240	5.86E-06	2.93E-06	**2.93E-07**
LOCA - RWCU/SDC below TAF	6 Flooded	6.51E-06	events/year	5	7.43E-10	240	1.78E-07	8.92E-08	**8.92E-09**
RPV leak or diversion	5	1.00E-05	/hour	9	1.00E-05	192	1.92E-03	**9.60E-04**	
RPV leak or diversion	6	1.00E-05	/hour	9	1.00E-05	240	2.40E-03	**1.20E-03**	
RPV leak or diversion	5 open	1.00E-05	/hour	9	1.00E-05	48	4.80E-04	**2.40E-04**	
RPV leak or diversion	6 unflooded	1.00E-05	/hour	9	1.00E-05	60	6.00E-04	**3.00E-04**	
RWCU LOCA outside Cont.	5	3.40E-03	events/year	10	3.88E-07	192	7.45E-05	3.73E-05	**3.73E-06**
RWCU LOCA outside Cont.	6	3.40E-03	events/year	10	3.88E-07	240	9.32E-05	4.66E-05	**4.66E-06**
RWCU LOCA outside Cont.	5 open	3.40E-03	events/year	10	3.88E-07	48	1.86E-05	9.32E-06	**9.32E-07**
RWCU LOCA outside Cont.	6 unflooded	3.40E-03	events/year	10	3.88E-07	60	2.33E-05	1.16E-05	**1.16E-06**

Note: See Table below for source details

Notes:

(1) As discussed in Subsection 16.2, the time in each Operating Mode is assumed to be as follows: Mode 5, 238 hrs; Mode 6-Unflooded, 59 hrs; and Mode 6-Flooded, 241 hrs.

(2) The shutdown initiating event frequencies per year are calculated using the hourly frequencies of Table 16.3-1 and multiplying by the hours in the corresponding Operating Mode. An additional 0.5 factor is applied given that shutdown is expected to occur every two years.

Table 16.3-3b

ESBWR Initiating Event Frequency Sources

	Sources
1	NEDO-33201, Chapter 2, Table 2.3-3 "Complete Loss of PSWS"
2	NUREG/CR-5496 (Reference 16-2) shutdown loss of offsite power frequency on a per hour basis.
3	NEDO-33201, Chapter 4, Subsection 4.08 (Sum of 6 RWCU CCF events that can cause failure to run)*
4	NEDO-33201, Chapter 2, Table 2.3-1 (il)
5	NEDO-33201, Chapter 2, Table 2.3-1 (g)
6	NEDO-33201, Chapter 2, Table 2.3-1 (c)
7	NEDO-33201, Chapter 2, Table 2.3-1 (f)
8	NEDO-33201, Chapter 2, Table 2.3-1 (d, e, fl, h, i2)
9	See Subsection 16.3.1.2.2 above for reference and basis for value used
10	NEDO-33201, Chapter 2, Table 2.3-4 (BOC-RWCU entry)
*	CCF events include: 3 of 3 Pumps fail to run, AOV/NOV Spurious Transfer, MOVs fail to close, and suction flow transmitters fail low

Table 16.3-4

BWR and PWR Loss of Running RHR Pump Events During Shutdown

SITE	CAUSE	REFERENCE	TIME (hours)
AG	PUMP TRIP AFTER TRANSFER OF RPS POWER SUPPLY	NSAC-157	0.02
DAVIS BESSE 1	PUMP FAILED TO START	NSAC-52	0.07
CALVERT CLIFFS 1	LPSI ACTUATION CAUSES PUMP TRIP	NSAC-52	0.25
CALVERT CLIFFS 2	LPSI ACTUATION CAUSES PUMP TRIP	NSAC-52	0.38
272/89-019	GAS BINDING (N2) DURING ACCUMULATOR DISCHARGE VALVE TESTING	AEOD/S93-05	0.70
CALVERT CLIFFS 2	CAVITATION	NSAC-52	2.00
BRUNSWICK 2	START FAILURE	NSAC-88	--
PEACH BOTTOM 3	PUMP TRIP (OVERCURRENT)	NSAC-88	--
BRUNSWICK 2	HIGH PUMP MOTOR RUNNING TEMP	NSAC-88	--
HATCH 1	HIGH RHR PUMP BEARING TEMP	NSAC-88	--
BRUNSWICK 2	LOSS OF PUMP SHAFT SEAL COOLING SYSTEM	NSAC-88	--
GRAND GULF	COOLING FAN FAILURE	NSAC-88	--
BROWNS FERRY 1	PUMP WINDING FAILURE (OVERCURRENT TRIP)	NSAC-88	--
BI	PUMP TRIP DUE TO WORN IMPELLER EYE WEAR RING	NSAC-157	--
DH	PUMP TRIP DUE TO HYDRAULIC TRANSIENT WHEN ONE PUMP STOPPED	NSAC-157	--
AI	PUMP TRIP DUE TO LOGIC POWER SUPPLY DISTURBANCE	NSAC-157	--
271/91-009	AIR BINDING OF PUMP DUE TO LOW RCS LEVEL	AEOD/S93-05	--

Table 16.3-5

Recovery Actions Failure Probabilities

Recovery Event	Mode	Time Allowable (hrs)	Failure Probability
Recovery of RWCU/SDCS	5	4	2.29E-01
	6-Unflooded	5.7	2.18E-01
Recovery of RCCWS/PSWS	5	4	2.29E-01
	6-Unflooded	5.7	2.18E-01
Recovery of Offsite Power	5	4	1.34E-01
	6-Unflooded	5.7	9.00E-02
Close the lower drywell hatches (RWCU break)	6	1.5	1.00E-01
Close the lower drywell hatches (instr. line break)	6	6.0	1.00E-02
RWCU diversion or leak isolation	All	0.3*	0.50

Note 1: Approximately 20 minutes available in most limiting case. Most limiting case assumes nominal water level for Mode 5 and 4" leak path. Time is to auto initiation of RWCU isolation on low level. More time would be available during Mode 6.

Table 16.3-6

Time Available to Close Lower DW Hatches

Parameter	Break in RWCU/SDCS drainlines	Break in instrument lines below TAF	Units
Lower drywell radius, R	5600 (220.5)		mm (inch)
Height from lower drywell to bottom of hatch	2400 (94.5)		mm (inch)
Volume of lower drywell below hatch, $V = \pi R^2 H$	236 (8334)		m^3 (ft^3)
Height of water above break, h	25000 (984.3)		mm (inch)
Break diameter, d	50 (2)	25 (1)	mm (inch)
Flow rate through break, $Q = (\pi d^2/4)\sqrt{2gh}$	157 (5544)	39 (1377)	m^3/hr (ft^3/hr)
Time available(1), $t = V/Q$	91	362	min

Note:

(1) This is the time available to close the lower DW hatches (if open) before flood level in containment reaches the bottom elevation of the hatch opening. Closure of both the equipment hatch and personnel hatch can be done from outside the lower drywell/containment.

(2) No credit is given to the two lower drywell sump pumps. Operating sump pumps would give personnel more time to close hatches.

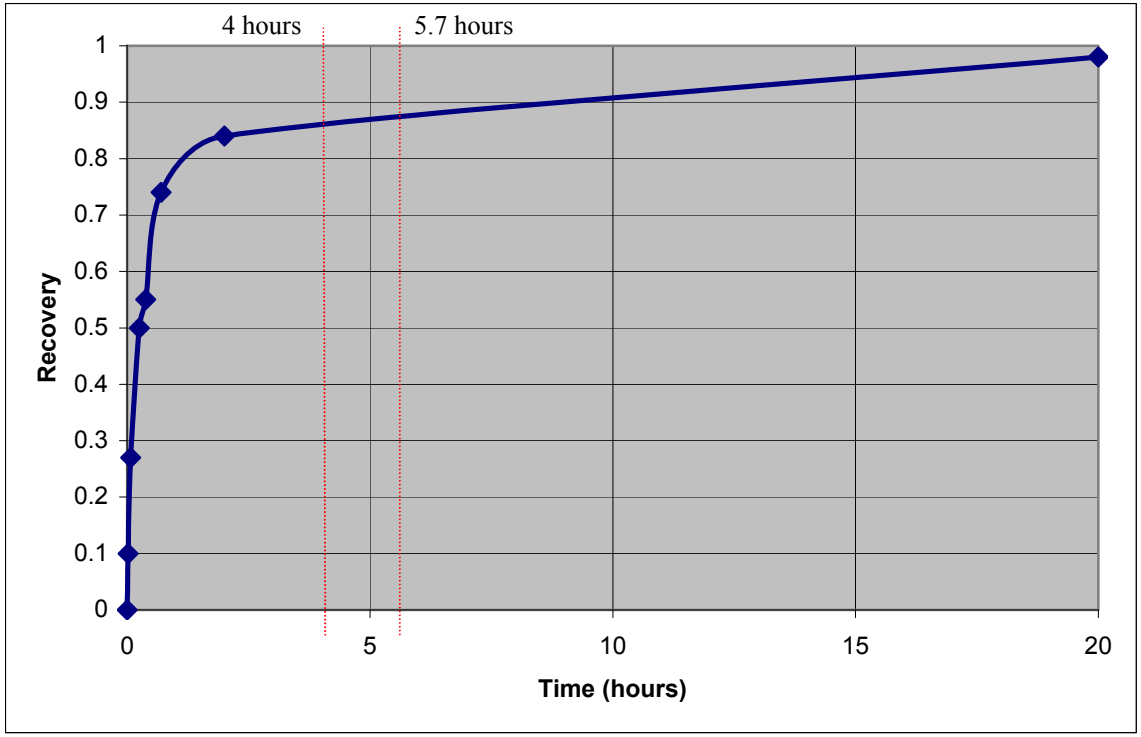

Figure 16.3-1. RWCU/SDCS Recovery Probability (Cumulative)

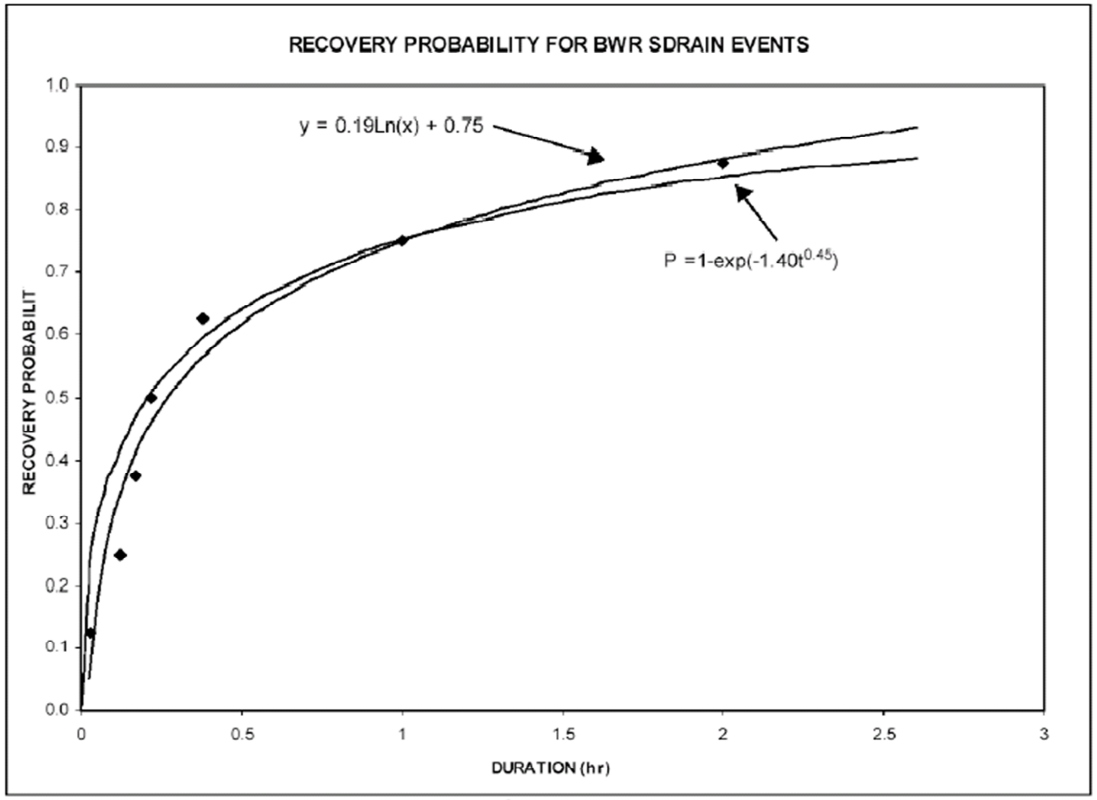

Note: Source: EPRI 1003113 – reference 16-9

Figure 16.3-2a. RPV Small Draindown Recovery

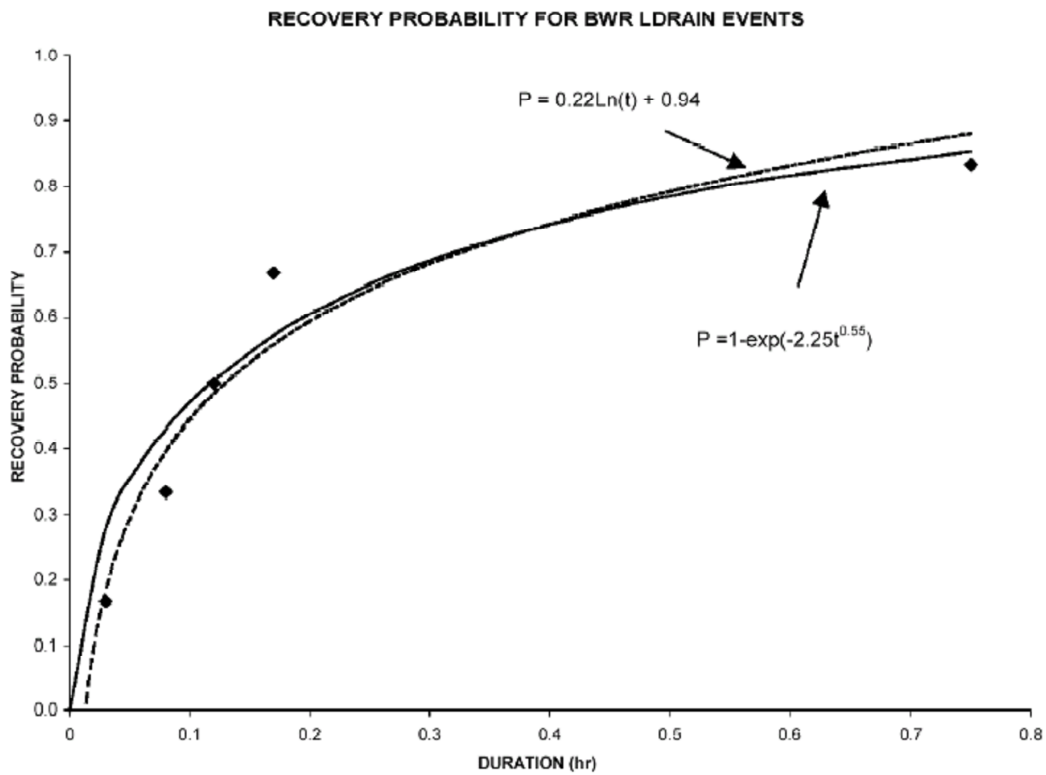

Note: Source: EPRI 1003113 – reference 16-9

Figure 16.3-2b. RPV Large Draindown Recovery

16.4 EVENT TREES

The shutdown PRA event trees are shown in Figures 16.4-1 through 16.4-34.

The event tree construction takes into account the following aspects:

- Chronological order of system actuation
- Grouping of mitigating systems by safety functions

Descriptions of all event tree headings used are provided below.

The success criteria used in the different events are reported under the description of the event heading below in Subsection 16.4.1.

The accident sequence end state nomenclature is the same as in the full power PRA:

- OK: The core is successfully cooled and the containment is intact. There is no core damage in these events.
- CD I: The containment is intact when core damage occurs and the RPV is at low pressure.
- CD II: The containment fails while the core is successfully cooled, leading to subsequent core damage.
- CD III: The containment is intact when core damage occurs and the RPV is at high pressure.
- CD IV: ATWS.
- CD V: The containment is bypassed at the time of core damage.

All core damage sequences in the shutdown model are assumed to be category CD-V. This end state is certain in Mode 5 Open and Mode 6 due to the upper drywell head being removed. For Mode 5, this treatment is conservative.

16.4.1 Event Tree Headings

The following is a list of event tree headings used in the ESBWR Shutdown PRA and a brief description of each. Most of the headings are the same ones used in the full power PRA model. Any changes made to the logic for shutdown are described below in Subsection 16.5.

B32-3LOOPSFAIL: Isolation Condensers (IC)

This logic is unique to shutdown. Most of the logic is in the full power model, however, the success criteria is different.

Regardless of initial RPV pressure, if decay heat is not removed, the Isolation Condenser System (ICS) is initiated automatically on high reactor pressure, or later on RPV water Level 2 (see NEDO-33201 Subsection 4.2.4.1 for ICS actuation details).

The IC function is able to prevent RPV Level 1 from being reached if:

- The initial RPV water inventory is above Level 3
- There is little or no leakage from the RPV.

The maximum RCPB leak rate within the Technical Specification during full power operation is assumed to be insufficient to decrease the RPV level to the point where an ADS signal occurs, even if high pressure RPV makeup is not established during the sequence mission time. Therefore, failure of the IC function due to leaks is considered a low probability.

The success criterion of this function is the operation of both operable (2/2) ICs during the sequence mission time. The Tech Specs for Mode 5 only require 2 out of the 4 ICs be available.

In Tech Spec Mode 5, the RPV water level is normally maintained below the ICS stub tubes. Per DCD Tier 2, Subsection 5.4.9.2, the four steam stub lines consist of low alloy steel piping originating at the reactor vessel nozzles and running to the respective ICS train steam supply line interface connection, and include pairs of DPVs mounted at the terminal ends. The steam stub lines are mounted to the RPV as nominally horizontal piping, sloped back to the reactor vessel to assure moisture drainage away from the ICS steam line or the DPV inlets. Therefore, even under a postulated scenario that the ICS stub tubes are flooded originally, the loss of DHR events would eventually result in the boiling of the coolant, the RPV water level would drop below the ICS stub tubes' elevation and ICS can perform its DHR function, which then is self-correcting.

Per DCD Tier2, Subsection 5.4.12, the ESBWR has an RPV head vent system that handles any noncondensable gas buildup, that could inhibit natural circulation core cooling, at the high point inside the RPV head by sweeping the gasses through a main steamline and then ultimately to the condenser. The piping is 50.8 mm (two inches) in diameter. The vent piping directs air and non-condensable gases from the RPV to either the Equipment and Floor Drain Sump or one of the main steamlines. Per DCD Tier 2, Subsection 5.4.12.2, the RPV head vent remains open to the MSLs during normal power operation and following any postulated transient or accident. The motor-operated shutoff valve is designed to remain open, and is not required to perform an active safety function. The alternate path vent line to the equipment and floor drain sump system is normally closed to protect the RCPB and the nitrogen-operated isolation valves for this line are designed to remain shut following a postulated transient or accident. During reactor shutdown and after the plant reaches cold shutdown conditions, the two valves in the vent piping leading to the Equipment and Floor Drain Sump are opened and the valve in the piping connected to the main steamline is closed.

The duration of time the head vent can be open in Mode 5 is inconsequential because the average coolant temperature is below or equal to 93.3°C (200°F). In a postulated unplanned re-entry into Mode 4 from Mode 5 due to loss of DHR, the head vent should not impact the ICS operability because the isolation of this line should be considered to be very likely. Thermal-hydraulic analyses have been performed and show there is over 64 hours to isolate the head vent if ICS starts automatically and the minimum CRD purge/cooling flow is credited, 32 hours if ICS is started manually without credit for CRD and 14.5 hours if ICS starts automatically without credit for CRD flow. Moreover, if such opening is assumed to be a shutdown LOCA event, it has already been bounded by the existing event trees for LOCA other than feedwater or GDCS, which have negligible risk contributions.

MS-TOP18: At Least 1 SRV Open

This is the same heading as is used for the full power model.

If the IC function fails, the RPV pressure will increase up to the SRVs setpoint. The success criterion for this function is the automatic operation of at least 1 SRV. Failure of this function is conservatively assumed to lead to core damage.

Because no credit is given for the IC function after the opening of an SRV the possibility of a stuck open relief valve is not modeled.

MS-TOP2: At Least 2 SRVs Open

This heading is not in the full power model. It is unique to the shutdown PRA.

If no high pressure injection system is available, it is necessary to depressurize the RPV to allow active low pressure injection to the RPV.

Success of this function requires the operator to manually open at least 2 SRVs.

The time available to the operator to manually initiate RPV depressurization is defined by the time when RPV level falls below L2 to the time when the ADS system will automatically initiate (i.e., at RPV Level 1).

UD-TOPINJ: High Pressure Injection Systems

This is the same heading as is used for the full power model.

Water level can be maintained above RPV Level 1 by the CRD system. Under normal conditions, CRD automatically actuates when coolant drops to RPV Level 2. For shutdown analysis, it is assumed operator action is required to initiate CRD injection. Successful CRD injection into the reactor vessel requires 1 CRD pump taking suction from the CST.

UD-TOPINJ2: High Pressure Injections Systems

This is the same heading as is used for the full power model.

This is CRD system top when both pumps are required for success. In the above heading, only one of two pumps is needed. In cases where this heading appears, both CRD pumps are needed to meet the success criteria.

VL-TOPINJ & VM-TOPINJ: Low Pressure Injection System and Dedicated LPCI Backup Injection

These two headings are the same ones used for the full power model.

After successful RPV depressurization, either FAPCS LPCI function can fulfill the core cooling function when configured in the RPV injection mode. Both systems require manual actuation.

The time available to the operator to manually initiate either of these two systems is defined by the time when RPV pressure has been sufficiently reduced to the time when the ADS system will automatically initiate (i.e., at RPV Level 1). Success of either function requires the operator to manually align at least 1 FAPCS train or the dedicated LPCI backup pump in RPV injection mode.

Primary FAPCS trains require RCCWS/PSWS for heat exchanger cooling. The dedicated LPCI pump does not require cooling.

VL-TOPINJL & VM-TOPINJL: Low Pressure Injection System and Dedicated LPCI Backup Injection after ADS

These headings are not in the full power model. They are unique to the shutdown PRA.

These event tree nodes model initiation of LPCI function following automatic RPV depressurization by the ADS system. As in the pre-ADS nodes, success of either function requires the operator to manually align at least 1 FAPCS train or the dedicated LPCI backup pump in RPV injection mode.

SD-GDCS: Gravity Driven Cooling System

This heading is not in the full power model. It is unique to the shutdown PRA.

If all the active low pressure injection systems are unavailable after successful RPV depressurization, the passive GDCS system will automatically inject water into the RPV. The opening of at least 2 GDCS lines and the discharge of 2 GDCS pools (at least one line for each of the two pools) accomplish short term cooling. One equalizing line must be opened for long term core cooling.

The success criteria for this function are the discharge of at least 2 lines and 2 GDCS pools and the opening of at least 1 equalizing line. If only two lines open, it must be one from each of the two pools. The opening of two lines from one pool and zero lines from the other available pool is not sufficient.

WR-TOPSDC: RWCU/SDC Restart

This is the same heading as is used for the full power model.

After a LOPP event, the RWCU/SDCS pumps are tripped and the DHR function is temporarily unavailable. Operator action to restart the RWCU/SDCS trains on the diesel generator power is included in the fault tree logic.

The success criterion is that at least one RWCU/SDCS train successfully restarts after a LOPP event and operates during the sequence mission time.

XD-TOPDPV: At Least 4 DPVs Open Automatically

This is the same heading as is used for the full power model.

The success criterion for this function is that at least 4 DPVs automatically open.

BC-TOPRWCU: Automatic Isolation of RWCU/SDC

This is the same heading as is used for the full power model. The Diverse Protection System function used in this logic is flagged out however. The RWCU isolation valves get a safety related close signal from each of the four safety related DCIS divisions. As a backup, the system isolation valves normally get a redundant closure signal from the DPS system. The DPS system is not required to be operable during shutdown modes. This backup signal is not credited in the shutdown model.

The success criterion for this function is that both lines in the operating train are isolated if given a close signal. This logic is modeled for closure of both RPV leak events, and in RWCU break outside containment events.

IM-TOPSDC – Manual RWCU Isolation

This is the same heading as is used for the full power model. This logic is made up of the human actions to manually isolate the RWCU system, and the equipment necessary to complete the action.

Recovery Actions

The operator has the opportunity to recover the lost functions (RWCU, PSWS) before any safety function is challenged. See Subsection 16.3 above for the time available and the recovery failure probabilities. The following recovery actions are in the event trees:

R-M5-G31: RWCU/SDC recovery in Mode 5,

R-M6-G31: RWCU/SDC recovery in Mode 6,

R-M5-PSWS: Recovery of RCCWS/PSWS (Mode 5),

R-M6-PSWS: PSWS Recovery in Mode 6,

DWH-1: Close the lower drywell hatch – RWCU/SDC drain line LOCA,

Note: It is assumed that the lower drywell hatch is open during the shutdown modes. If not closed at the time of the initiating event, the operator must close the lower drywell hatches to prevent flooding of reactor building lower levels. See Subsection 16.3.4.3 for details on time available for this action and the recovery failure probability.

DWH-2: Close the lower drywell hatch – Instrument line LOCA,

LEAK-ISO: Operators identify and isolate RWCU/SDC leak.

Note: The operator recovery event to identify and isolate RWCU/SDC leak is used in all modes. This event is different from the IM-TOPSDC event above. That event isolates all RWCU/SDC. This event only isolates the leak in the system. In the event trees, if this event is successful, DHR is still available via the RWCU system. If IM-TOPSDC is successful, DHR is still necessary from a backup source (GDCS, FAPCS).

R-M5-LOPP: Offsite Power recovery in Mode 5 (including Mode 5 and Mode 5 Open),

R-M6-LOPP: Offsite Power recovery in Mode 6.

16.4.2 Loss of Decay Heat Removal Event Trees

Initiators leading to a loss of DHR function are grouped into scenarios occurring during Mode 5, Mode 5 Open, or Mode 6 Unflooded. Given the three initiating event types leading to loss of DHR scenarios (Loss of RWCU/SDC, Loss of RCCWS/PSWS and LOPP), nine shutdown event trees for loss of DHR are analyzed. The event trees for Mode 5 and Mode 5 Open are almost identical. The credited systems, and sequence order are the same for both modes except for ICS. The ICS (even tree heading B32-3LOOPSFAIL) is not modeled for the Mode 5 Open event trees.

16.4.2.1 Loss of DHR in Mode 5 or Mode 5 Open

Following loss of the DHR function, pressure and temperature in the RPV gradually increase. Due to reduced initial pressure and temperature during shutdown conditions, the operator has the opportunity to recover the lost function before the pressure reaches the SRV setpoint.

If recovery of DHR is not possible, the ICS function will be initiated on RPV high pressure or low RPV water level (Level 2). This function provides short term as well as the long term core cooling.

If ICS fails, RPV pressure increase leads to SRV opening. Steam generated by decay heat is then discharged to the suppression pool, where it is condensed. As the level inside the RPV decreases, high pressure makeup is required to keep the core covered.

Failure of all of the SRVs to open could be postulated to lead to a vessel rupture scenario. Even if mitigation is still possible, core damage is assumed.

Control Rod Drive system (CRD) can fulfill the high-pressure makeup function. CRD is assumed to need operator actuation during shutdown.

If high-pressure makeup fails, low-pressure makeup is required. The opening of two SRVs enables the injection modes of either FAPCS or the dedicated LPCI backup injection.

If low pressure injection systems fail after manual depressurization with 2 SRVs, the ADS will actuate and the short term and long term core cooling functions are performed with 2 of 4 lines from the Gravity Driven Cooling System (GDCS), 2 of 3 GDCS pools and the opening of at least one equalizing line. The equalizing line will permit effective RPV flooding with the suppression pool water, as long as at least 4 DPVs have opened. If for some reason GDCS cannot inject into the depressurized reactor, either FAPCS or dedicated LPCI backup injection can support the short term and long term core cooling functions.

16.4.2.1.1 Loss of Both RWCU/SDCS Trains (Mode 5 & Mode 5 Open)

For specific details about the event trees for these initiating events, refer to Figures 16.4-2 and 16.4-5. The description given above corresponds to this case. The event tree headings associated with these event trees are listed here:

- R-M5-G31
- B32-3LOOPSFAIL (not modeled for Mode 5 Open)
- MS-TOP18
- UD-TOPINJ
- MS-TOP2
- VL-TOPINJ
- VM-TOPINJ
- XD-TOPDPV
- VL-TOPINJ
- VM-TOPINJ
- SD-GDCS

These trees result in 5 core damage sequences each. For the specific logic associated with each, see the attached Figures 16.4-2 and 16.4-5.

16.4.2.1.2 Loss of Preferred Power (Mode 5 & Mode 5 Open)

The event trees for these initiating events are shown in Figures 16.4-3 and 16.4-6. The event tree heading descriptions above for loss of DHR in Mode 5 are applicable to this case. Every system credited has an alternative power supply to ensure availability (FAPCS/CRD/RWCU – diesel generator, FPS has two diesel driven pumps).

- R-M5-LOPP
- B32-3LOOPSFAIL (not modeled for Mode 5 Open)
- MS-TOP18
- WR-TOPSDC
- UD-TOPINJ
- MS-TOP2
- VL-TOPINJ
- VM-TOPINJ
- XD-TOPDPV
- VL-TOPINJL
- VM-TOPINJL

- SD-GDCS

These trees result in 5 core damage sequences each. For the specific logic associated with each, see the attached Figures 16.4-3 and 16.4-6.

16.4.2.1.3 Loss of RCCWS/PSWS (Mode 5 & Mode 5 Open)

The event trees for these initiating events are shown in Figures 16.4-1 and 16.4-4. The event tree heading descriptions above apply to this tree as well, except for those systems that are unavailable because they rely on RCCWS/PSWS: CRD and FAPCS.

- R-M5-PSWS
- B32-3LOOPSFAIL (not modeled for Mode 5 Open)
- MS-TOP18
- MS-TOP2
- VM-TOPINJ
- XD-TOPDPV
- VM-TOPINJL
- SD-GDCS

These trees result in 5 core damage sequences each. For the specific logic associated with each, see the attached Figures 16.4-1 and 16.4-4.

16.4.2.2 Loss of DHR in Mode 6 (Unflooded)

In this case, the RPV is open (i.e., the RPV head has been removed in Mode 6), the containment is also open, and the reactor well is assumed to be drained, so the water level is at the elevation of the vessel flange.

A considerable amount of cool water is above the core, allowing the operator significant time to recover failed equipment or systems before coolant boil-off reduces the water level in the vessel, causing safety system actuations.

However, if the decay heat function cannot be recovered, RPV coolant temperature will rise, eventually reaching boiling conditions. Makeup water to the RPV is then needed to prevent core damage. Four systems are allowed for the makeup function. Three of them require manual initiation by the operator: FAPCS in injection mode and the dedicated LPCI backup injection mode, as well as CRD (assumed to need manual action during shutdown). Only GDCS automatically initiates, it will actuate when level falls to RPV Level 1.

16.4.2.2.1 Loss of Both RWCU/SDCS Trains (Mode 6 Unflooded)

The event tree for this initiating event is shown in Figure 16.4-8. All headings for this event tree have been described previously. The headings associated with this initiating event are:

- R-M6-G31
- UD-TOPINJ

- VL-TOPINJ
- VM-TOPINJ
- SD-GDCS

This tree results in only one core damage sequence. It is the result of all credited systems failing to function. For the specific logic associated the event tree, see the attached Figure 16.4-8.

16.4.2.2.2 Loss of Preferred Power (Mode 6 Unflooded)

The event tree for this initiating event is shown in Figure 16.4-9. The descriptions above for loss of DHR in Mode 6 apply to this tree as well. RWCU/SDC is credited in this event tree. Recovery of the system does require a manual action to restart the pump on diesel generator power. The headings associated with this initiating event are:

- R-M6-LOPP
- WR-TOPSDC
- UD-TOPINJ
- VL-TOPINJ
- VM-TOPINJ
- SD-GDCS

This tree results in only one core damage sequence. It is the result of all credited systems failing to function. For the specific logic associated the event tree, see the attached Figure 16.4-9.

16.4.2.2.3 Loss of RCCWS/PSWS (Mode 6 Unflooded)

The event tree for this initiating event is shown in Figure 16.4-7. The descriptions above for loss of DHR apply to this tree as well, except that CRD and FAPCS are unavailable because they rely upon RCCWS/PSWS: The dedicated LPCI backup injection and GDCS remain the only makeup systems available. The headings associated with this initiating event are:

- R-M6-PSWS
- VM-TOPINJ
- SD-GDCS

This tree results in only one core damage sequence. It is the result of all credited systems failing to function. For the specific logic associated the event tree, see the attached Figure 16.4-7.

16.4.2.3 RPV Draindown Events (Mode 5, Mode 5 Open)

The event trees for these initiating events are shown in Figures 16.4-27 and 16.4-28. The event tree heading descriptions above apply to this tree as well.

- LEAK-ISO
- BC-TOPRWCU
- IM-TOPSDC

- B32-3LOOPSFAIL
- MS-TOP18
- UD-TOPINJ2
- MS-TOP2
- XD-TOPDPV
- VL-TOPINJ
- VM-TOPINJ
- SD-GDCS

These trees result in only nine core damage sequences each. For the specific logic associated with each, see the attached Figures (16.4-27 and 16.4-28).

16.4.2.4 RPV Draindown Events (Mode 6 Unflooded)

The event tree for this initiating event is shown in Figure 16.4-29. The event tree heading descriptions above apply to this tree as well.

- LEAK-ISO
- BC-TOPRWCU
- IM-TOPSDC
- VL-TOPINJ
- VM-TOPINJ
- SD-GDCS

This tree results in only three core damage sequences. Core damage occurs if all three leak isolation measures fail, or if RWCU is isolated and no backup DHR is successful. For the specific logic associated with each, see the attached Figure 16.4-29.

16.4.2.5 RPV Draindown Events (Mode 6 Flooded)

The event tree for this initiating event is shown in Figure 16.4-30. The event tree heading descriptions above apply to this tree as well. If the leak is isolated, RWCU function is still credited. If RWCU is isolated to stop the leak, alternate DHR is required.

- LEAK-ISO
- BC-TOPRWCU
- IM-TOPSDC

This tree results in only one core damage sequence. Core damage occurs if all three leak isolation measures fail. For the specific logic associated with this tree, see attached Figure 16.4-30.

16.4.3 Loss of Coolant Accidents

16.4.3.1 Shutdown LOCAs (Mode 5, Mode 5 Open, & Mode 6 Unflooded)

Due to low pressure and temperature of shutdown conditions, all LOCAs are liquid breaks. All LOCAs in this section are analyzed for three modes (Mode 5, Mode 5 Open, and Mode 6 Unflooded). The evolution of the accident and the systems available for mitigation depend on the break location.

The following break locations are analyzed:

- Break in a GDCS injection line,
- Break in feedwater line A,
- Break above TAF other than GDCS or FW,
- Breaks below TAF,
- RWCU breaks outside containment.

As soon as the break takes place, the liquid coolant flows into the lower drywell, driven by gravity and hydrostatic pressure. If insufficient coolant makeup is provided to the vessel, water level decreases from the vessel flange down to the break elevation. Only break elevations below the first stage water spill of the steam separators are analyzed; for breaks above the first stage water spill of the steam separators, the RWCU/SDCS continues removing the decay heat, and no safety function is directly challenged.

Once the level falls below the first stage water spill of the steam separators, DHR is lost, as the RWCU/SDCS pumps receive a runback signal, and natural circulation inside the vessel is lost when water level drops below the separators skirts.

It is assumed for breaks above TAF that providing makeup to the vessel and allowing coolant boiling is an effective method for core cooling. CRD, FAPCS, Fire Protection and GDCS are considered for water makeup.

For breaks below TAF, the drywell has to be flooded up to an elevation above TAF to reach a safe core cooling condition. The personnel and equipment access hatches to the lower drywell could be open during shutdown. A recovery action to close these doors is modeled.

RWCU breaks outside containment require two mitigating features to prevent core damage. First the break must be isolated (either manually or automatically). Second, an alternate form of DHR is required (except in Mode 6 Flooded).

16.4.3.1.1 LOCA in GDCS Line

The event trees for this initiating event are shown in Figures 16.4-10, 16.4-15, and 16.4-20. The event trees for Modes 5 and 5 Open have the same top headings and each has two core damage sequences. The event tree for Mode 6 Unflooded has one core damage sequence (all DHR/inventory makeup systems fail). The headings associated with this initiating event are:

- UD-TOPINJ

- XD-TOPDPV (Node is only in Mode 5 and Mode 5 Open event trees. Depressurization is not required in Mode 6.)
- VL-TOPINJ
- VM-TOPINJ
- SD-GDCS (For GDCS LOCA events, an additional GDCS injection line is flagged failed in the logic to account for the break.).

For the specific logic associated these event trees, see the attached Figures 16.4-10, 16.4-15, and 16.4-20.

16.4.3.1.2 LOCA in Feedwater Line

The event trees for this initiating event, in each analyzed mode are shown in Figures 16.4-11, 16.4-16, and 16.2-21. Each event tree has the same top headings and each one has only one core damage sequence (all DHR/inventory makeup systems fail). FAPCS or dedicated LPCI backup injection into the RPV is through feedwater Line A. With those systems unavailable, only CRD and GDCS are credited in these event trees. The headings associated with this initiating event are:

- UD-TOPINJ
- SD-GDCS

For the specific logic associated these event trees, see the attached Figures 16.4-11, 16.4-16, and 16.4-21.

16.4.3.1.3 LOCA above TAF other than Feedwater or GDCS

The event trees for this initiating event are shown in Figures 16.4-12, 16.4-17, and 16.4-22. These event trees are the same as the ones listed above for GDCS line LOCAs. The available systems are the same, and the only difference is the initiating event and initiating event frequency. The headings associated with this initiating event are:

- UD-TOPINJ
- XD-TOPDPV
- VL-TOPINJ
- VM-TOPINJ
- SD-GDCS

For the specific logic associated these event trees, see the attached Figures 16.4-12, 16.4-17, and 16.4-22.

16.4.3.1.4 LOCA below TAF in RWCU/SDC Drain Lines

The event trees for this initiating event are shown in Figures 16.4-14, 16.4-19, and 16.4-24. In all below TAF LOCA events, closure of the lower drywell hatches is required to prevent core damage. For these event trees, if the lower drywell hatch is closed, makeup to the RPV is still required to prevent core damage. The headings associated with this initiating event are:

- DWH-1
- UD-TOPINJ2
- XD-TOPDPV (Node is only in Mode 5 and Mode 5 Open event trees. Depressurization is not required in Mode 6.),
- VL-TOPINJ
- VM-TOPINJ
- SD-GDCS

The event trees for Modes 5 and 5 Open have three core damage sequences. The event tree for Mode 6 Unflooded has two core damage sequences. One occurs when the drywell hatch closure fails. The other one(s) occur when the hatch is successfully closed, but no makeup is provided. For the specific logic associated these event trees, see the attached Figures 16.4-14, 16.4-19, and 16.4-24.

If not closed at the time of the initiating event, the operator must close the lower drywell hatches to isolate the flood in the lower drywell. See Subsection 16.3.4.3 for details on time available for this action and the recovery failure probability.

16.4.3.1.5 LOCA Below TAF in Instrument Lines

The event tree for these initiating events are shown in Figures 16.4-13, 16.4-18, and 16.4-23. The description is similar to the preceding case except for headings UD-TOPINJ and DWH-2. Heading UD-TOPINJ is used instead of UD-TOPINJ2 because the instrument lines are smaller in size and one CRD pump is sufficient for the inventory control. Heading DWH-2 is used instead of DWH-1 to account for the longer time available to the operator to close the drywell hatches. The headings associated with this initiating event are:

- DWH-2
- UD-TOPINJ
- XD-TOPDPV (Node is only in Mode 5 and Mode 5 Open event trees. Depressurization is not required in Mode 6.),
- VL-TOPINJ
- VM-TOPINJ
- SD-GDCS

The event trees for Modes 5 and 5 Open have three core damage sequences. The event tree for Mode 6 Unflooded has two core damage sequences. For the specific logic associated these event trees, see the attached Figures 16.4-13, 16.4-18, and 16.4-23.

16.4.3.2 LOCA in Mode 6 (Flooded)

Breaks below TAF are analyzed for LOCAs in Mode 6-Flooded. The same two below TAF break locations are analyzed:

- LOCA below TAF in RWCU/SDC Drain Lines,

- LOCA below TAF in Instrument Lines.

The event trees for these two cases are provided in Figures 16.4-25 and 16.4-26, respectively. Each event tree has a single top event modeling failure to close the lower drywell hatches. The failure probabilities for this node are the same as that described previously. Failure to close the lower drywell hatch is modeled as directly leading to a core damage scenario. The scenario with successful closure of the lower drywell hatches does not result in a core damage end state (and no additional top events are questioned) because sufficient water exists above the break to flood the containment above TAF.

16.4.3.3 RWCU Break Outside Containment (Mode 5, Mode 5 Open)

The event trees for these initiating events are shown in Figures 16.4-31 and 16.4-32. The event tree heading descriptions above apply to these trees as well. All RWCU Break Outside Containment (RWCU-BOC) events require RWCU isolation and some alternate source for DHR.

- BC-TOPRWCU
- IM-TOPSDC
- B32-3LOOPSFAIL (not modeled for Mode 5 Open)
- MS-TOP18
- UD-TOPINJ2
- MS-TOP2
- XD-TOPDPV
- VL-TOPINJ
- VM-TOPINJ
- SD-GDCS

Each of these trees results in only nine core damage sequences. For the specific logic associated with each, see the attached Figures 16.4-31 and 16.4-32.

16.4.3.4 RWCU Break Outside Containment (Mode 6 Unflooded)

The event tree for this initiating event is shown in Figures 16.4-33. The event tree heading descriptions above apply to this tree as well. If the leak is isolated, RWCU function is still credited. If RWCU is isolated to stop the leak, alternate DHR is required.

- BC-TOPRWCU
- IM-TOPSDC
- VL-TOPINJ
- VM-TOPINJ
- SD-GDCS

This tree results in only three core damage sequences. Core damage occurs if both leak isolation measures fail, or if RWCU is isolated and the backup DHR is not successful. For the specific logic associated with each, see the attached Figure 16.4-33.

16.4.3.5 RWCU Break Outside Containment (Mode 6 Flooded)

The event tree for this initiating event is shown in Figures 16.4-34. The event tree heading descriptions above apply to this tree as well. If the leak is isolated, RWCU function is still credited.

- BC-TOPRWCU
- IM-TOPSDC

This tree results in only one core damage sequence. Core damage occurs if both leak isolation measures fail. For the specific logic associated with each, see the attached Figure 16.4-34.

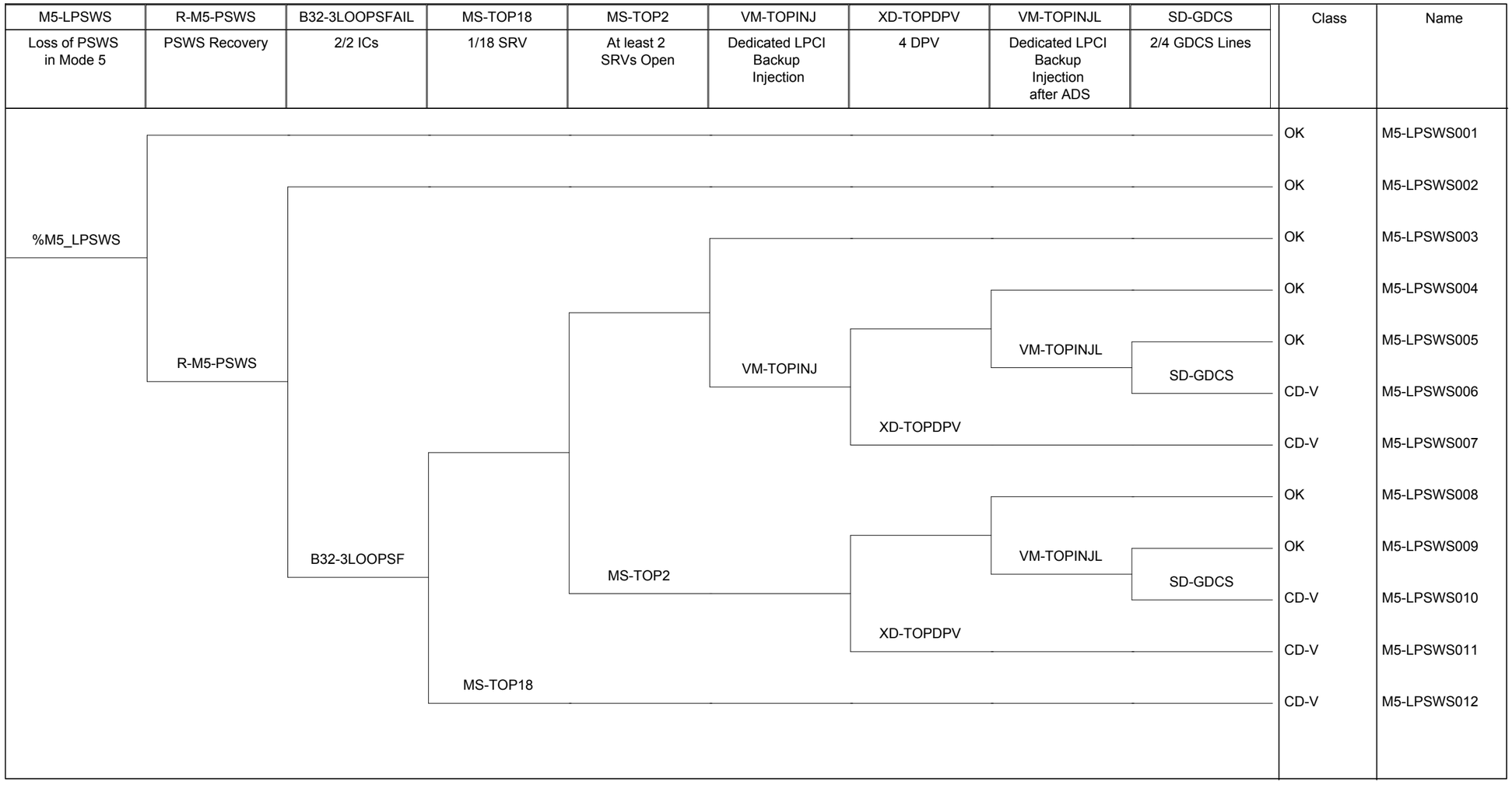

Figure 16.4-1. Loss of RCCWS/PSWS (Mode 5)

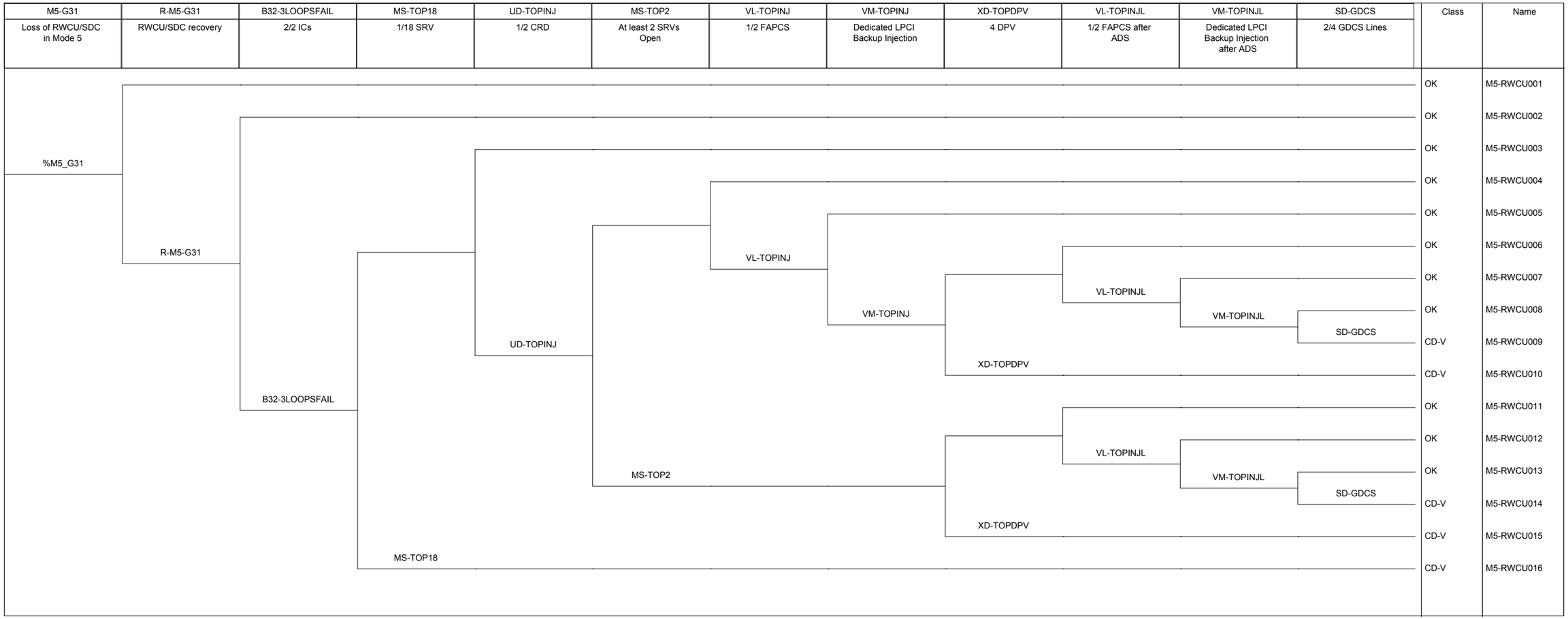

Figure 16.4-2. Loss of Both RWCU/SDCS Trains (Mode 5)

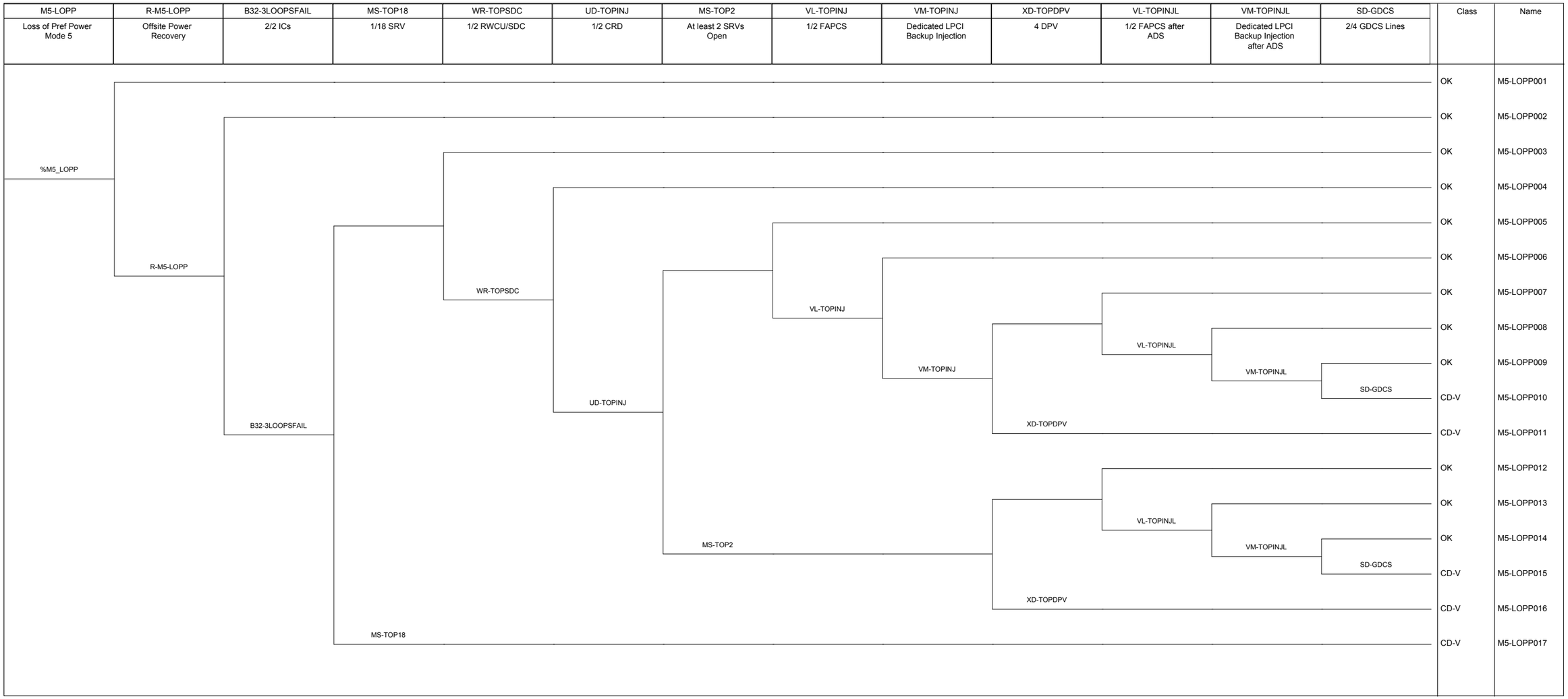

Figure 16.4-3. Loss of Preferred Power (Mode 5)

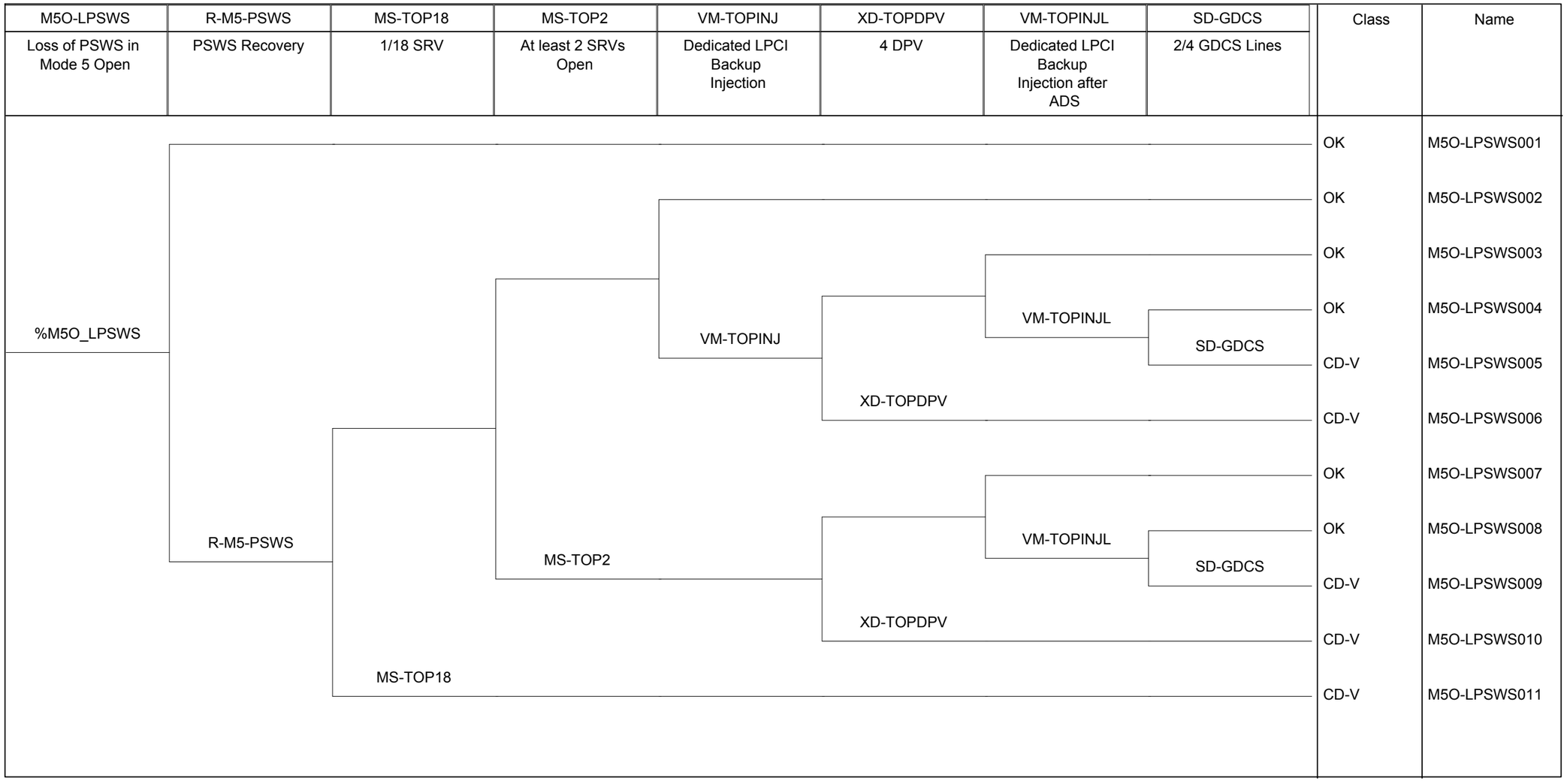

Figure 16.4-4. Loss of RCCWS/PSWS (Mode 5 Open)

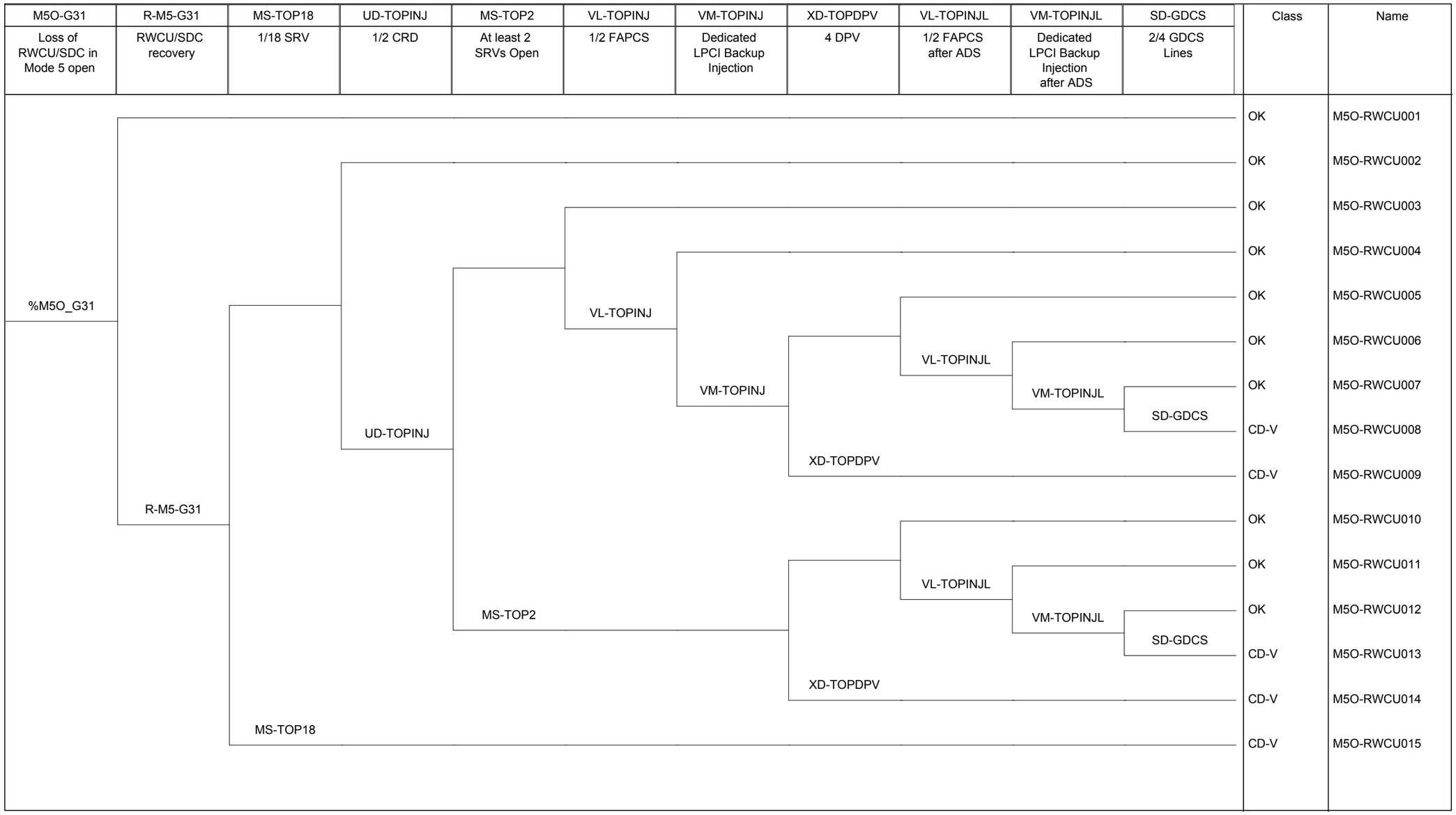

Figure 16.4-5. Loss of Both RWCU/SDCS Trains (Mode 5 Open)

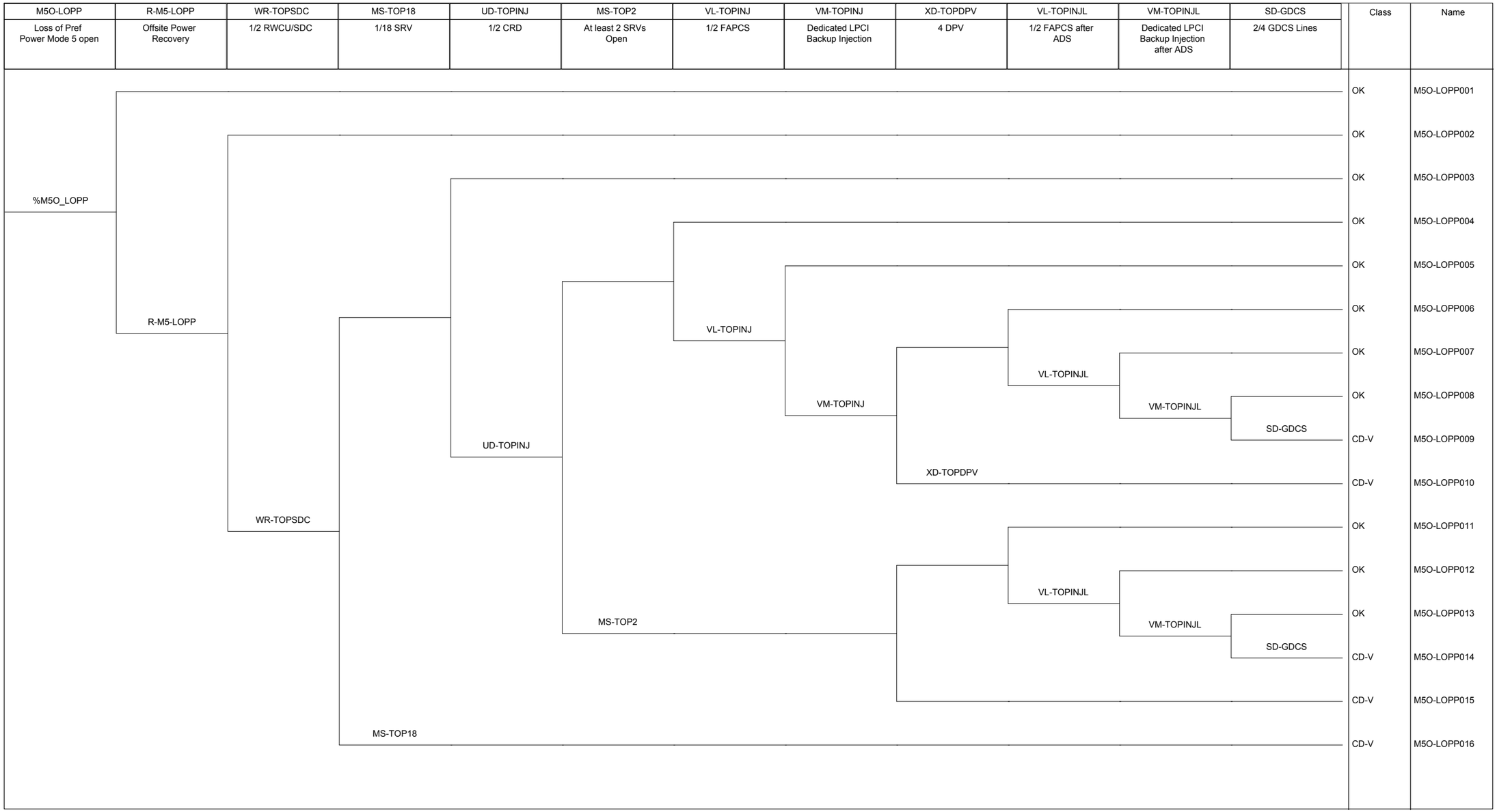

Figure 16.4-6. Loss of Preferred Power (Mode 5 Open)

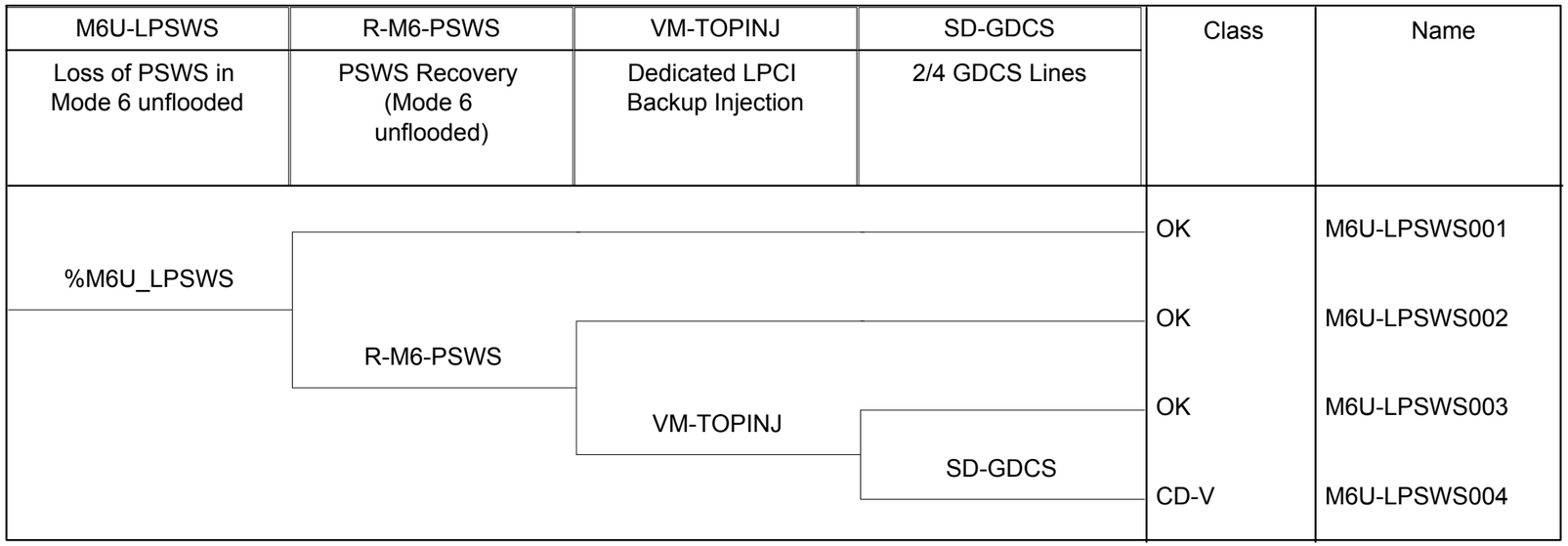

Figure 16.4-7. Loss of RCCWS/PSWS (Mode 6 Unflooded)

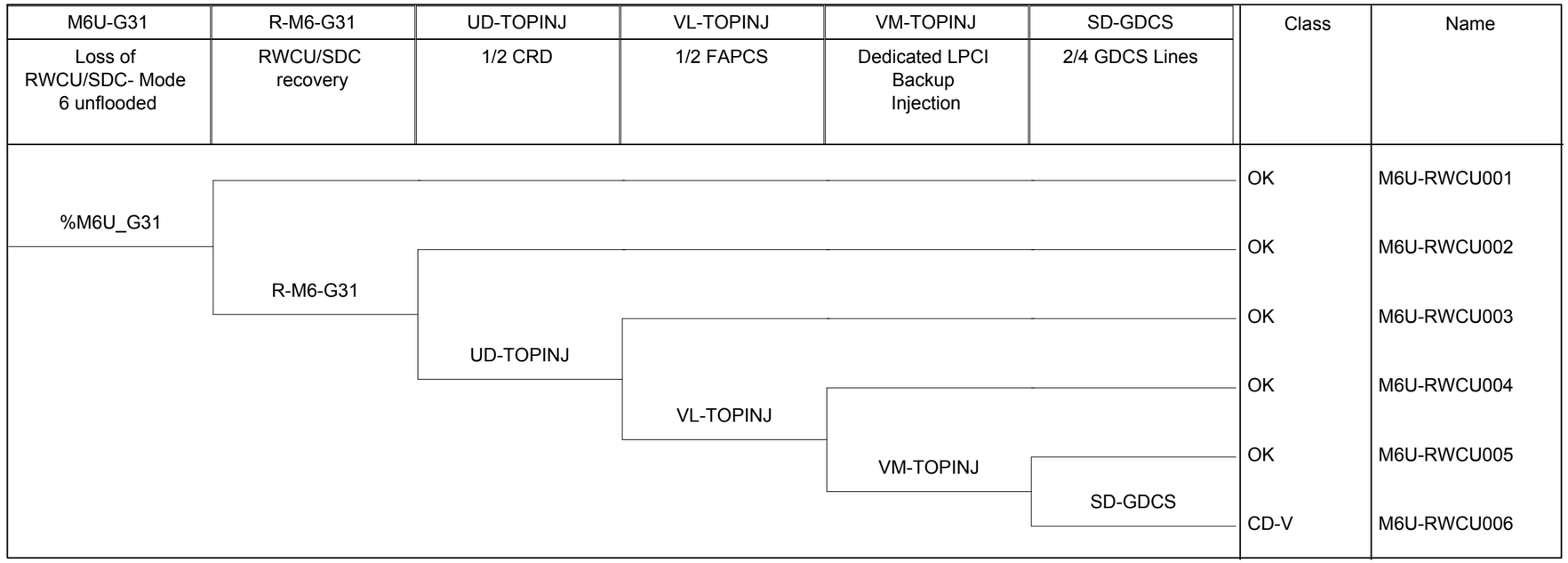

Figure 16.4-8. Loss of Both RWCU/SDCS Trains (Mode 6 Unflooded)

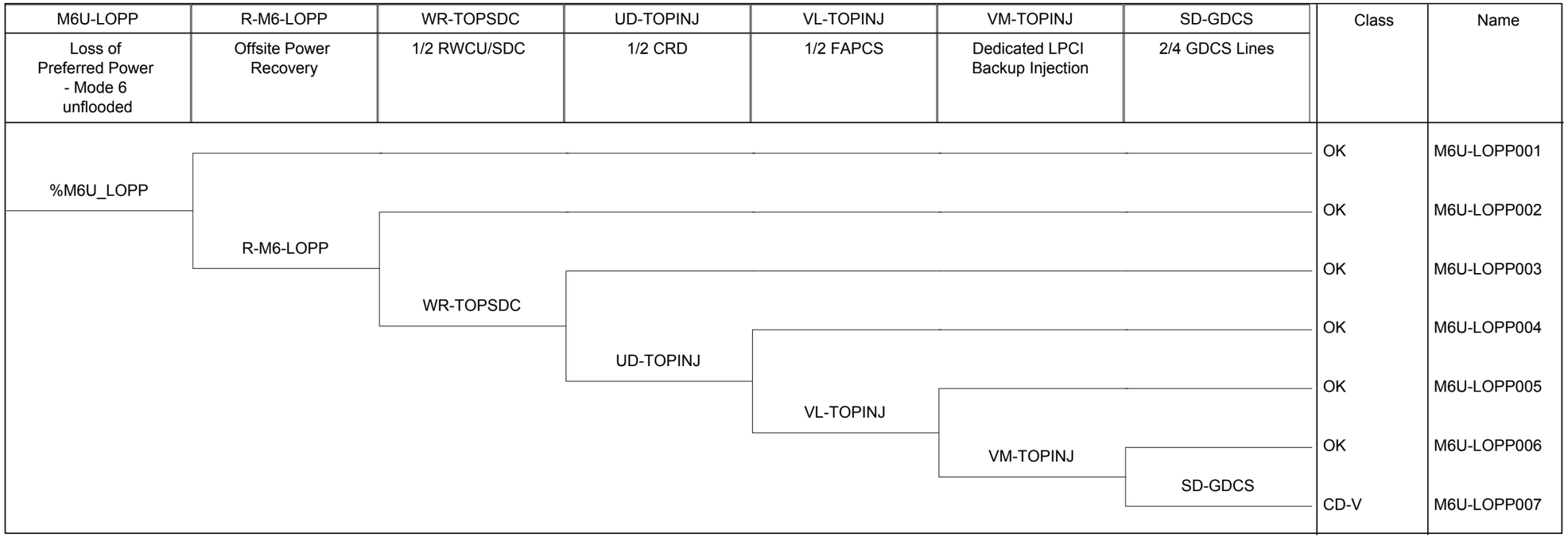

Figure 16.4-9. Loss of Preferred Power (Mode 6 Unflooded)

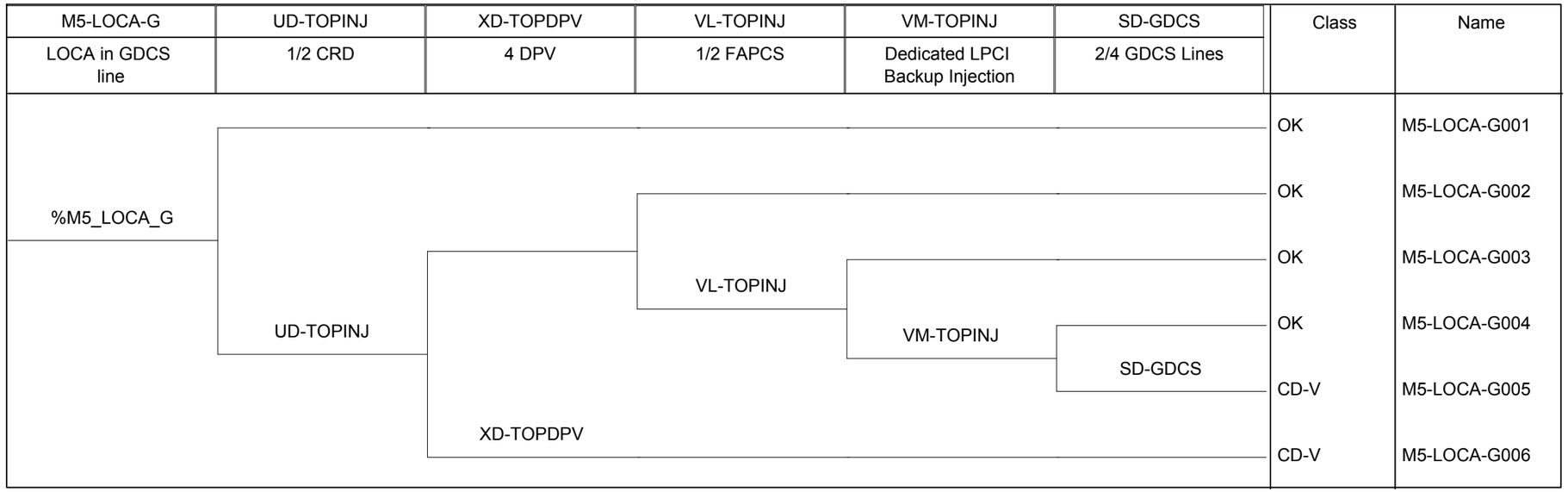

Figure 16.4-10. LOCA in GDCS Line (Mode 5)

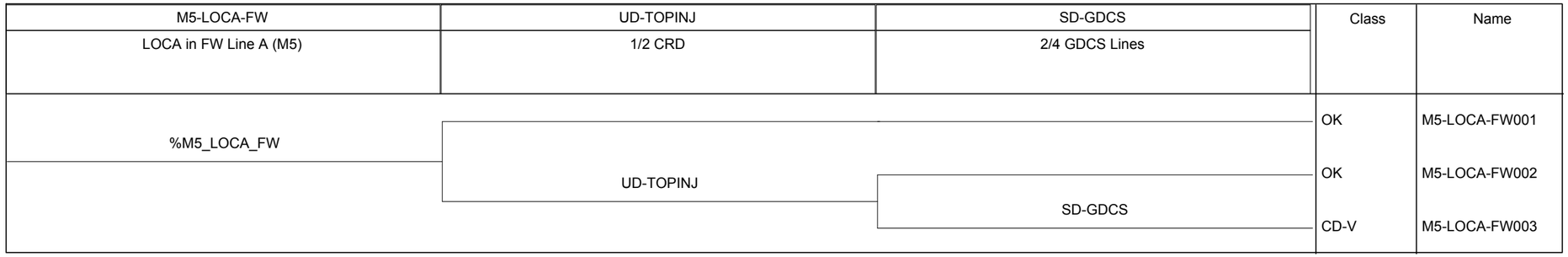

Figure 16.4-11. LOCA in Feedwater Line (Mode 5)

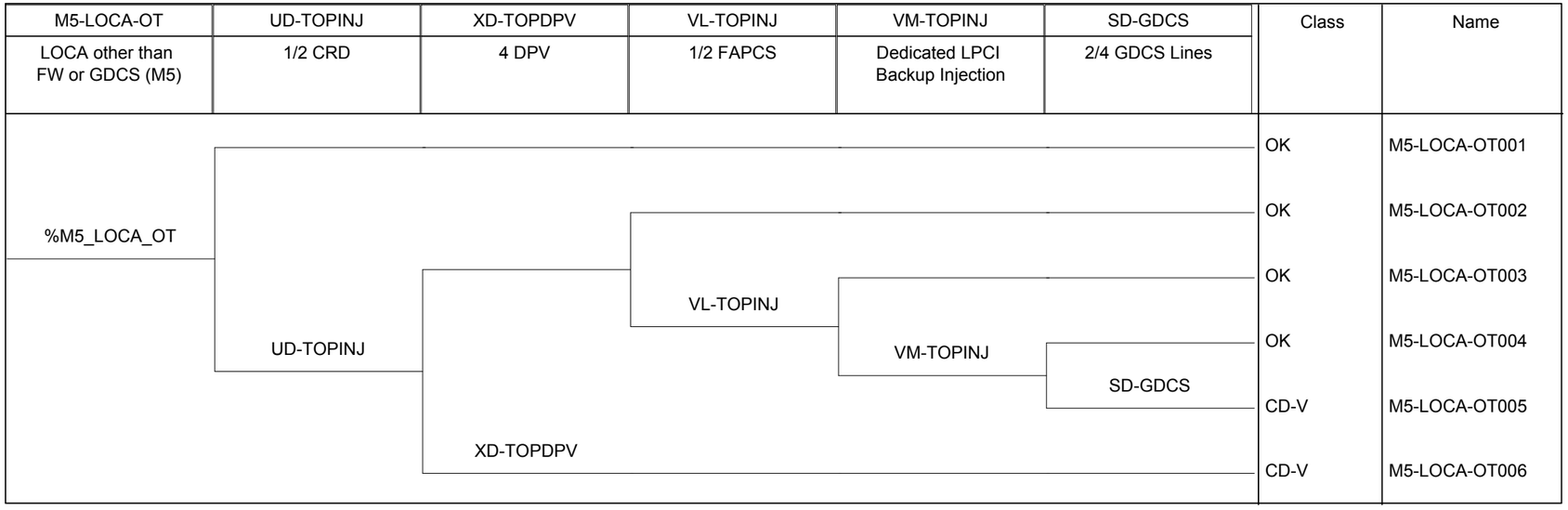

Figure 16.4-12. LOCA above TAF Other than Feedwater or GDCS (Mode 5)

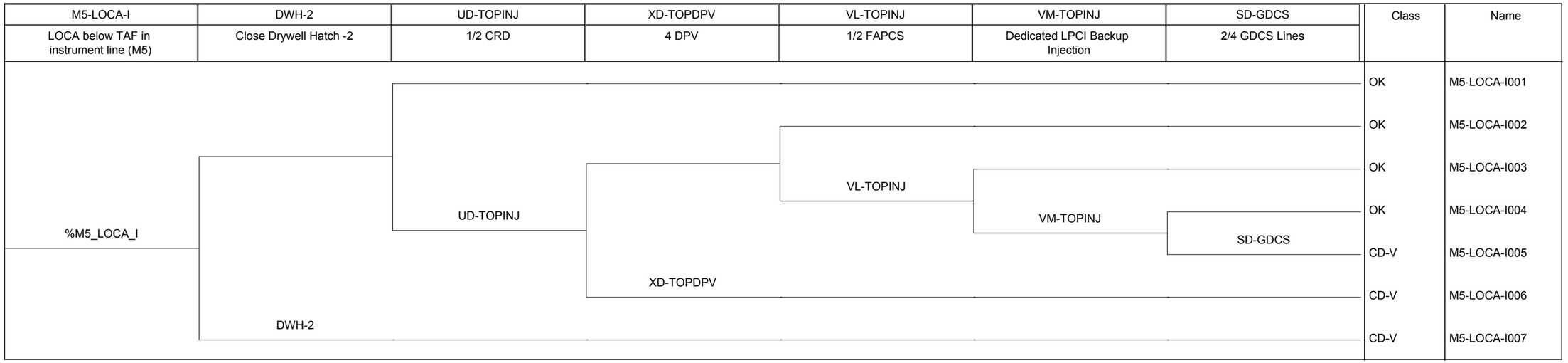

Figure 16.4-13. LOCA below TAF in Instrument Line (Mode 5)

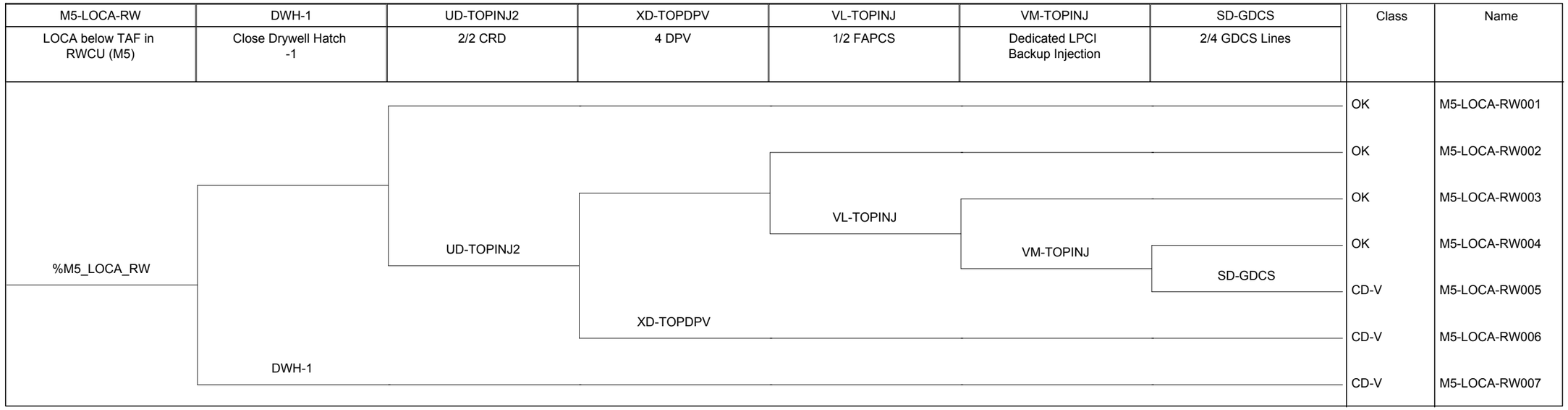

Figure 16.4-14. LOCA below TAF in RWCU/SDC Drain Line (Mode 5)

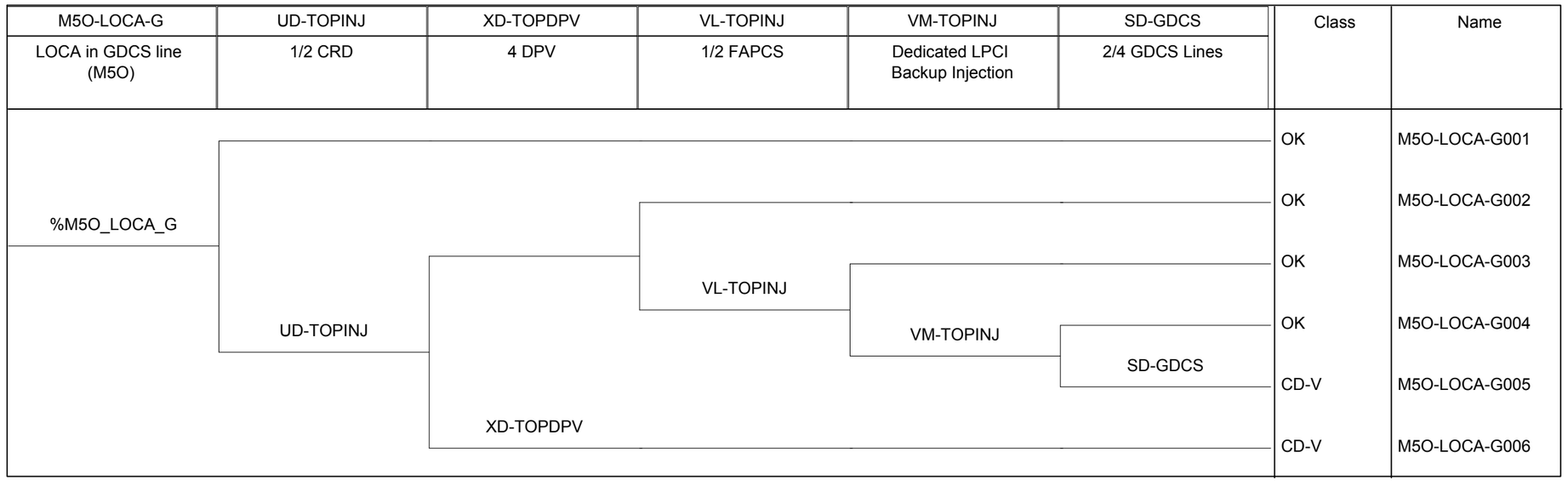

Figure 16.4-15. LOCA in GDCS Line (Mode 5 Open)

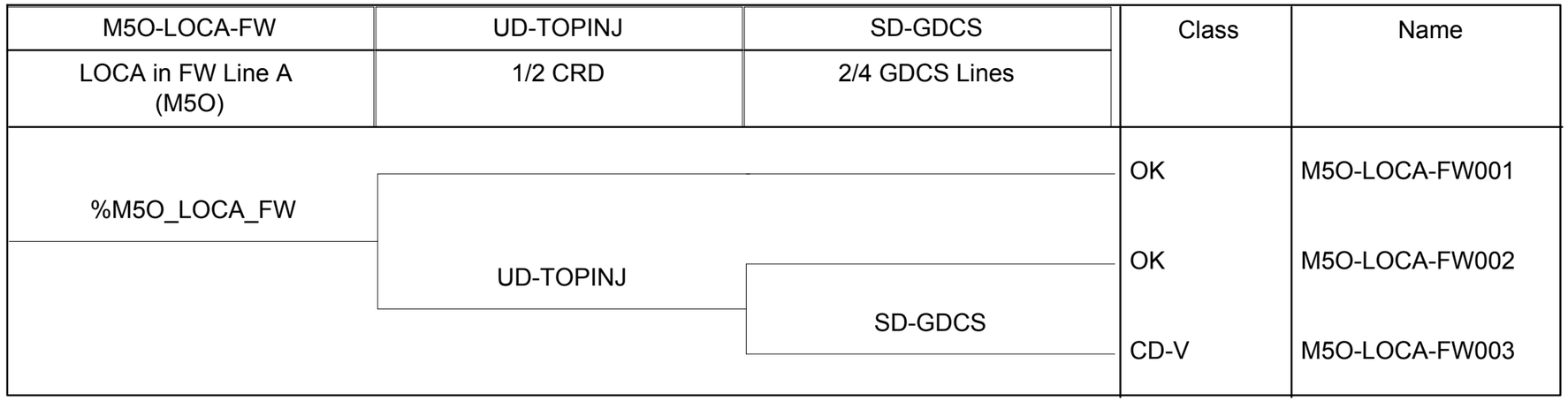

Figure 16.4-16. LOCA in Feedwater Line (Mode 5 Open)

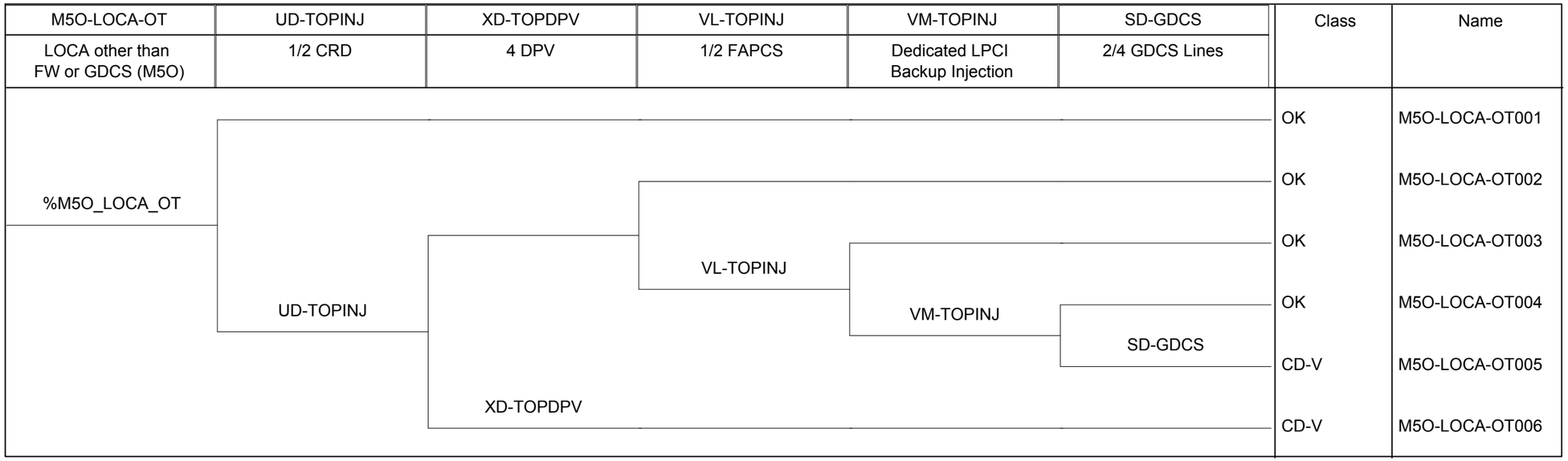

Figure 16.4-17. LOCA above TAF Other than Feedwater or GDCS (Mode 5 Open)

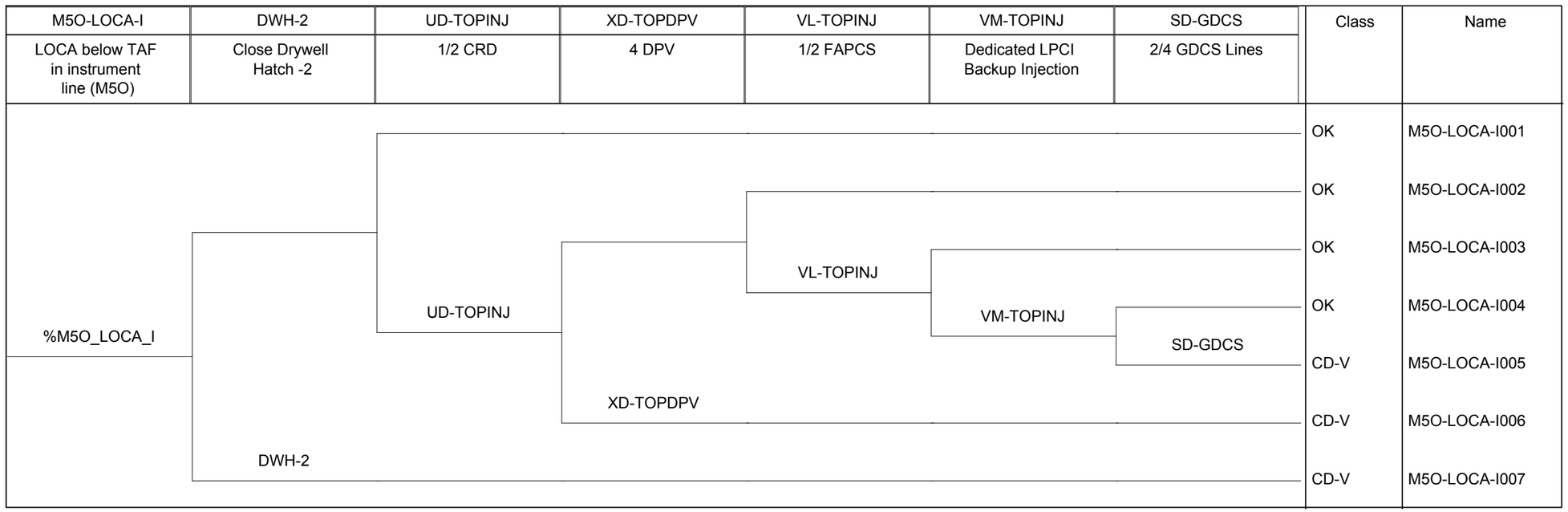

Figure 16.4-18. LOCA below TAF in Instrument Line (Mode 5 Open)

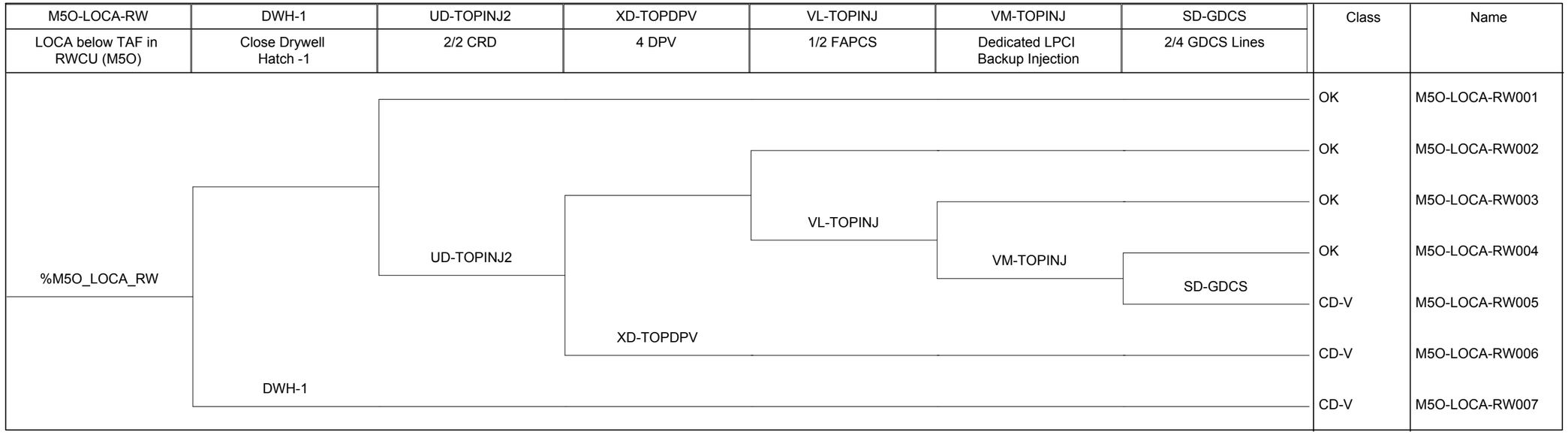

Figure 16.4-19. LOCA below TAF in RWCU/SDC Drain Line (Mode 5 Open)

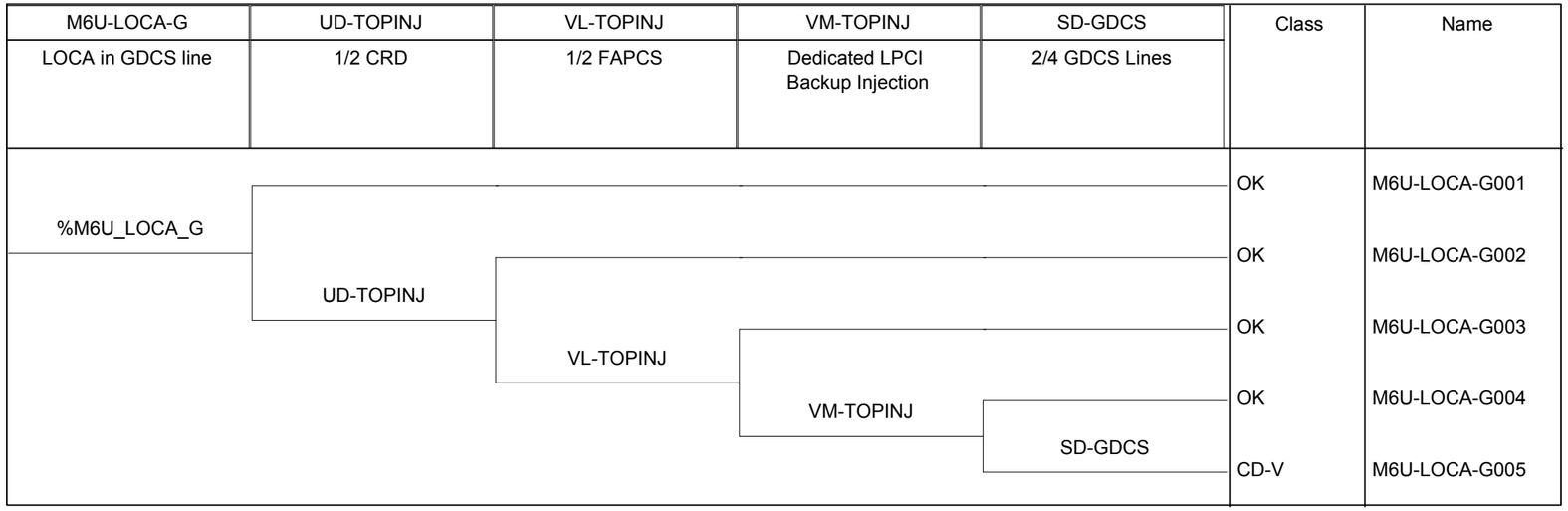

Figure 16.4-20. LOCA in GDCS Line (Mode 6 Unflooded)

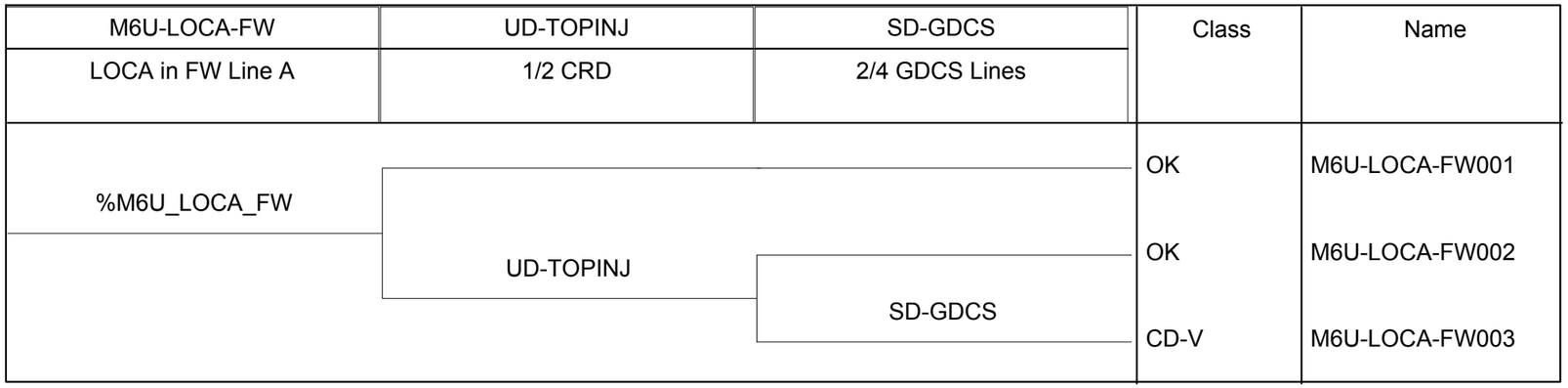

Figure 16.4-21. LOCA in Feedwater Line (Mode 6 Unflooded)

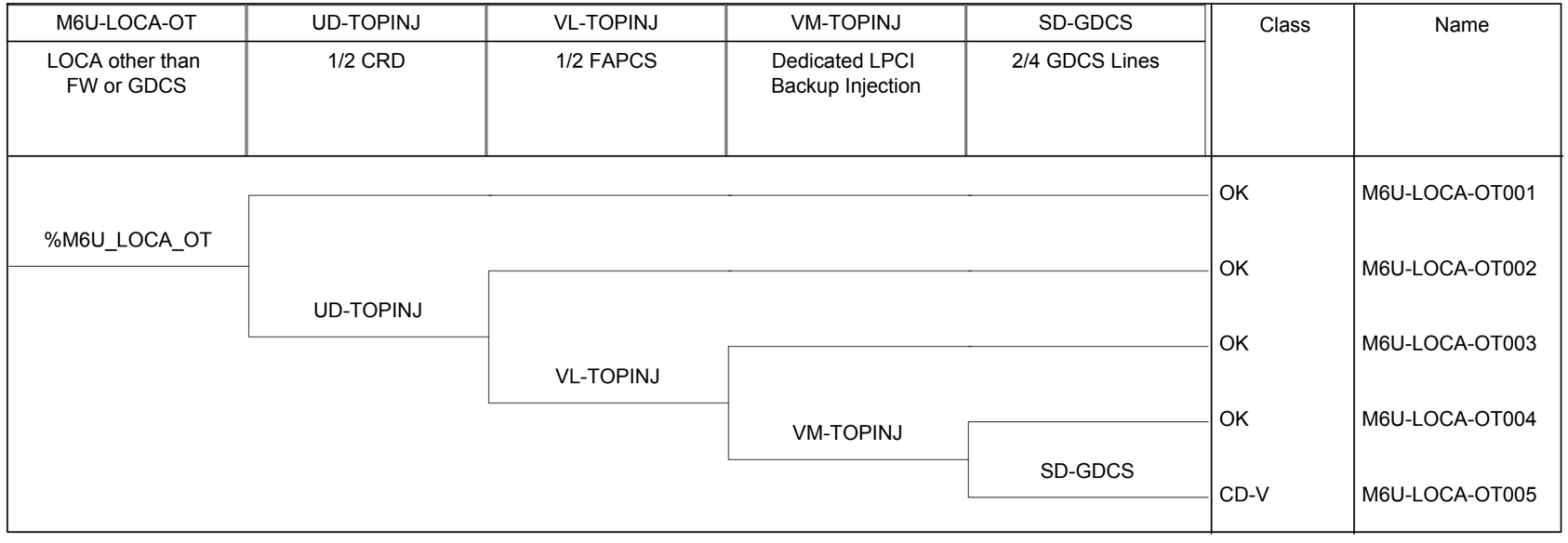

Figure 16.4-22. LOCA above TAF Other than Feedwater or GDCS (Mode 6 Unflooded)

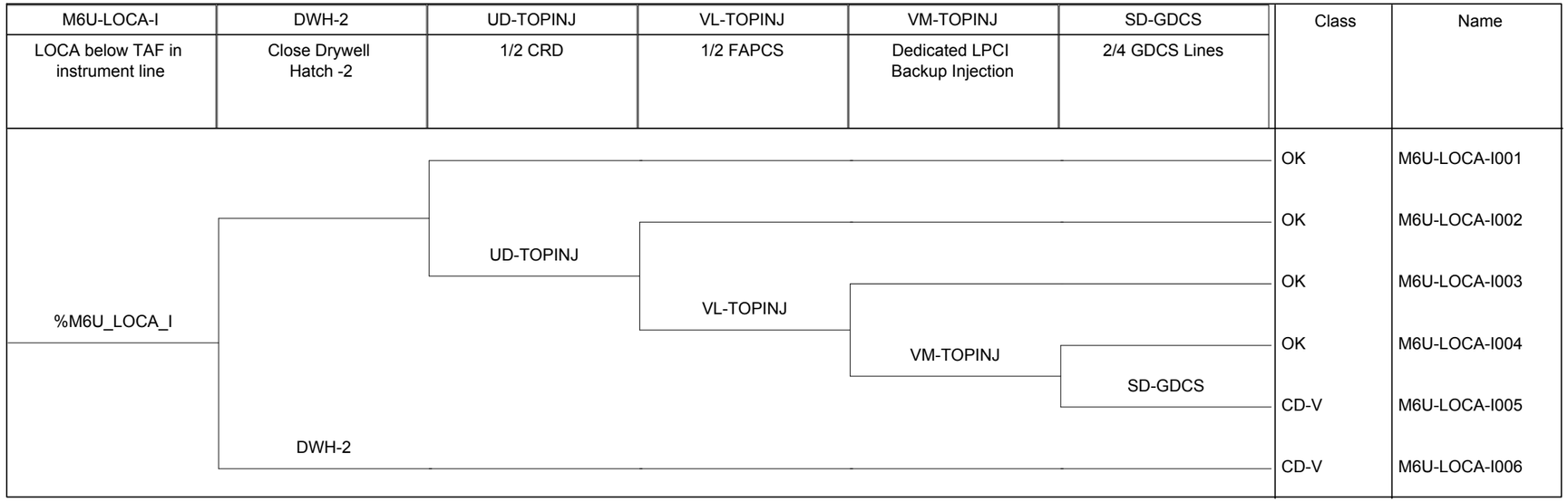

Figure 16.4-23. LOCA below TAF in Instrument Line (Mode 6 Unflooded)

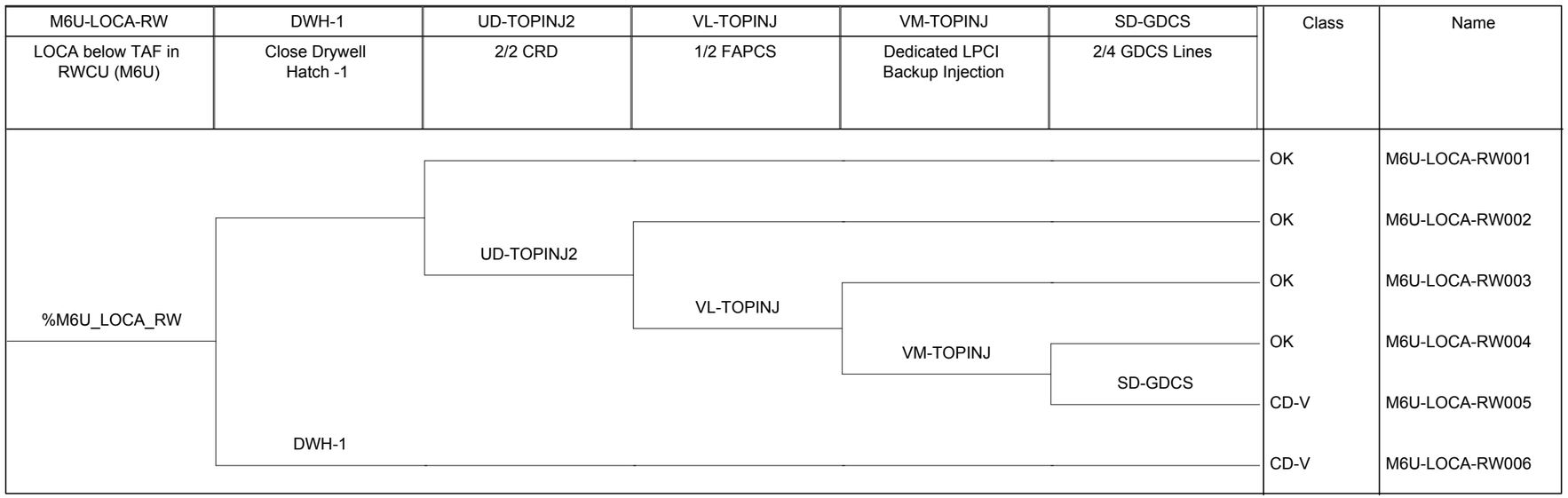

Figure 16.4-24. LOCA below TAF in RWCU/SDC Drain Line (Mode 6 Unflooded)

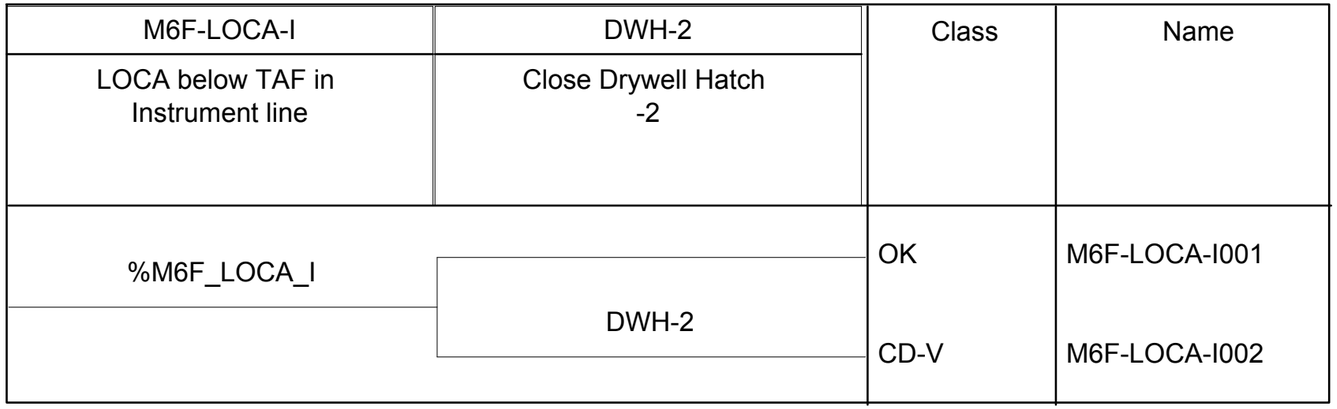

Figure 16.4-25. LOCA below TAF in Instrument Line (Mode 6 Flooded)

M6F-LOCA-RW	DWH-1	Class	Name
LOCA below TAF in RWCU/SDC drainlines	Close Drywell Hatch -1		
%M6F_LOCA_RW		OK	M6F-LOCA-RW001
	DWH-1	CD-V	M6F-LOCA-RW002

Figure 16.4-26. LOCA Below TAF in RWCU/SDC Drain Line (Mode 6 Flooded)

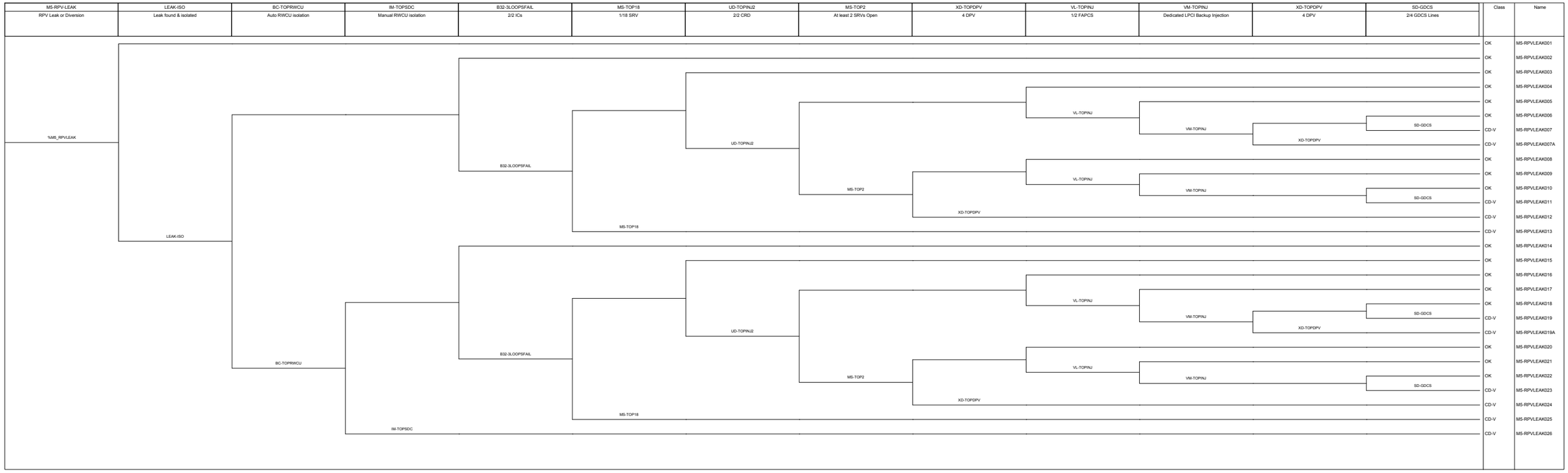

Figure 16.4-27. RPV Draindown Events (Mode 5)

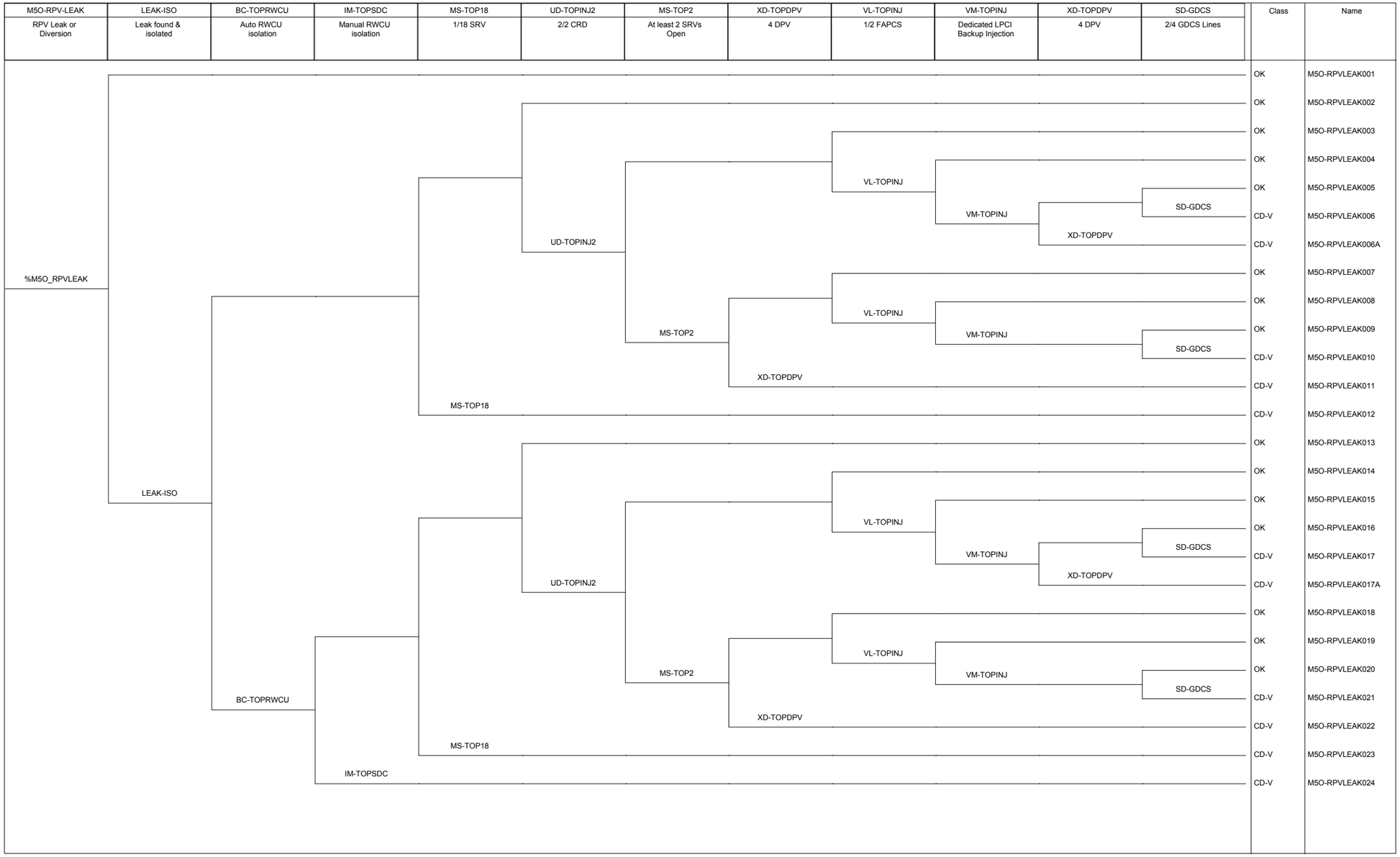

Figure 16.4-28. RPV Draindown Events (Mode 5 Open)

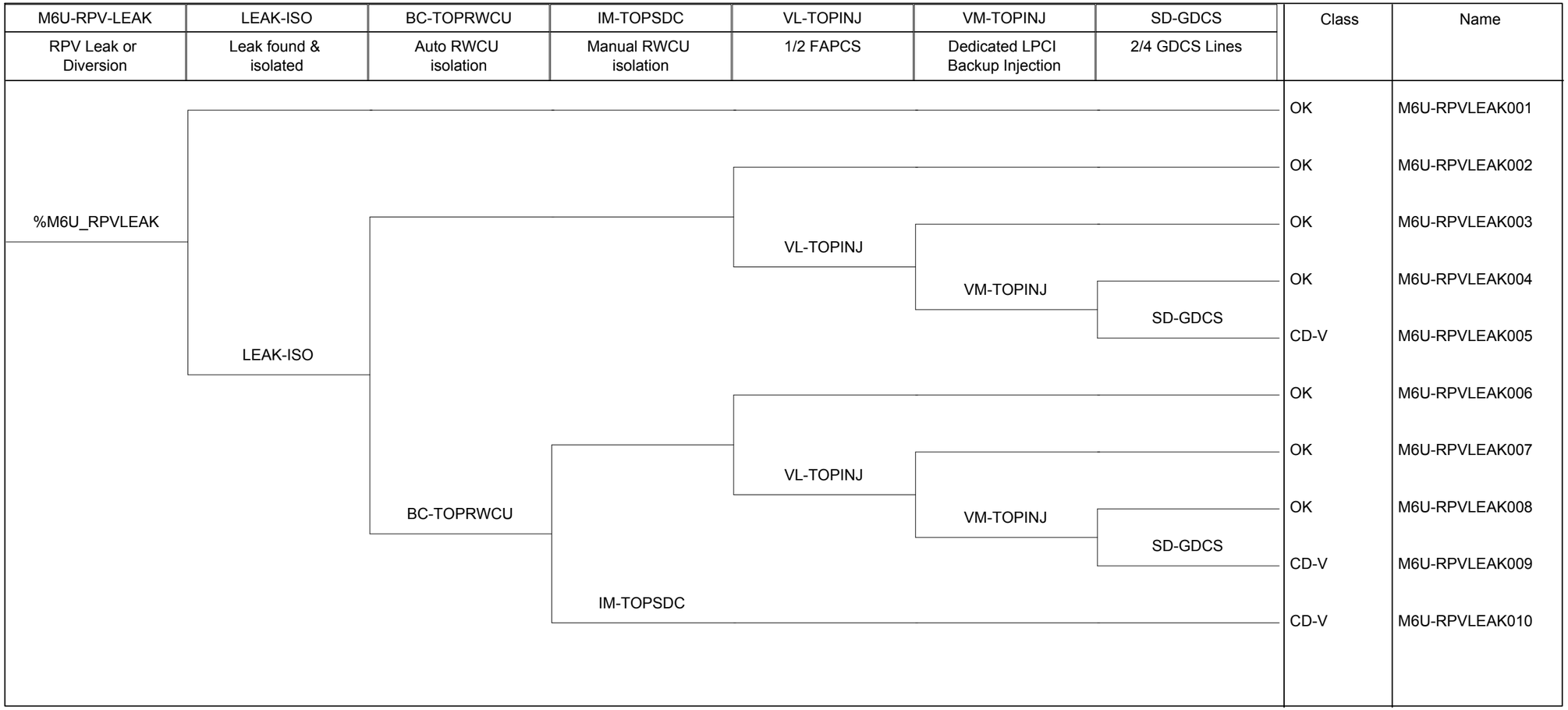

Figure 16.4-29. RPV Draindown Events (Mode 6 Unflooded)

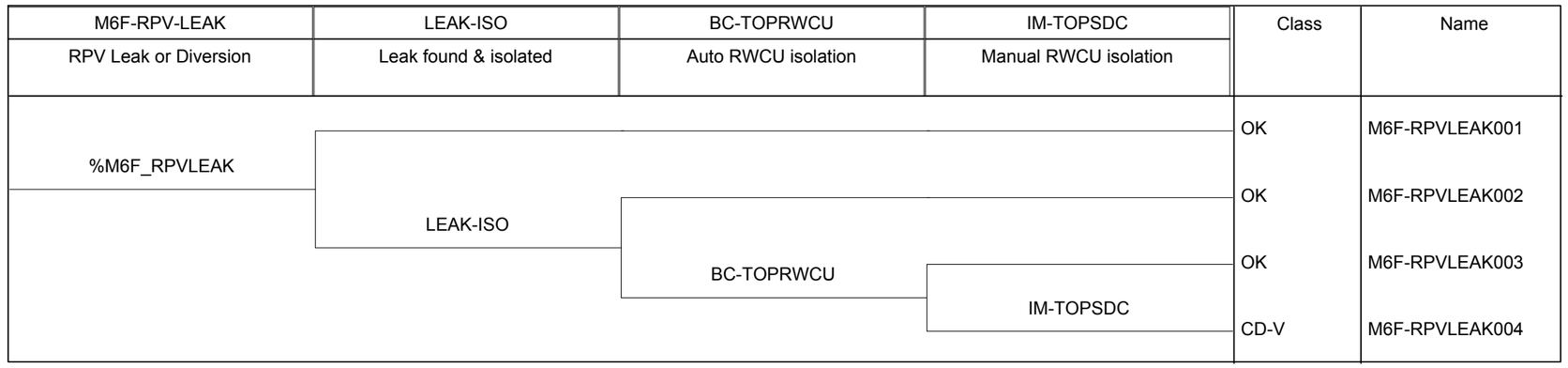

Figure 16.4-30. RPV Draindown Event (Mode 6 Flooded)

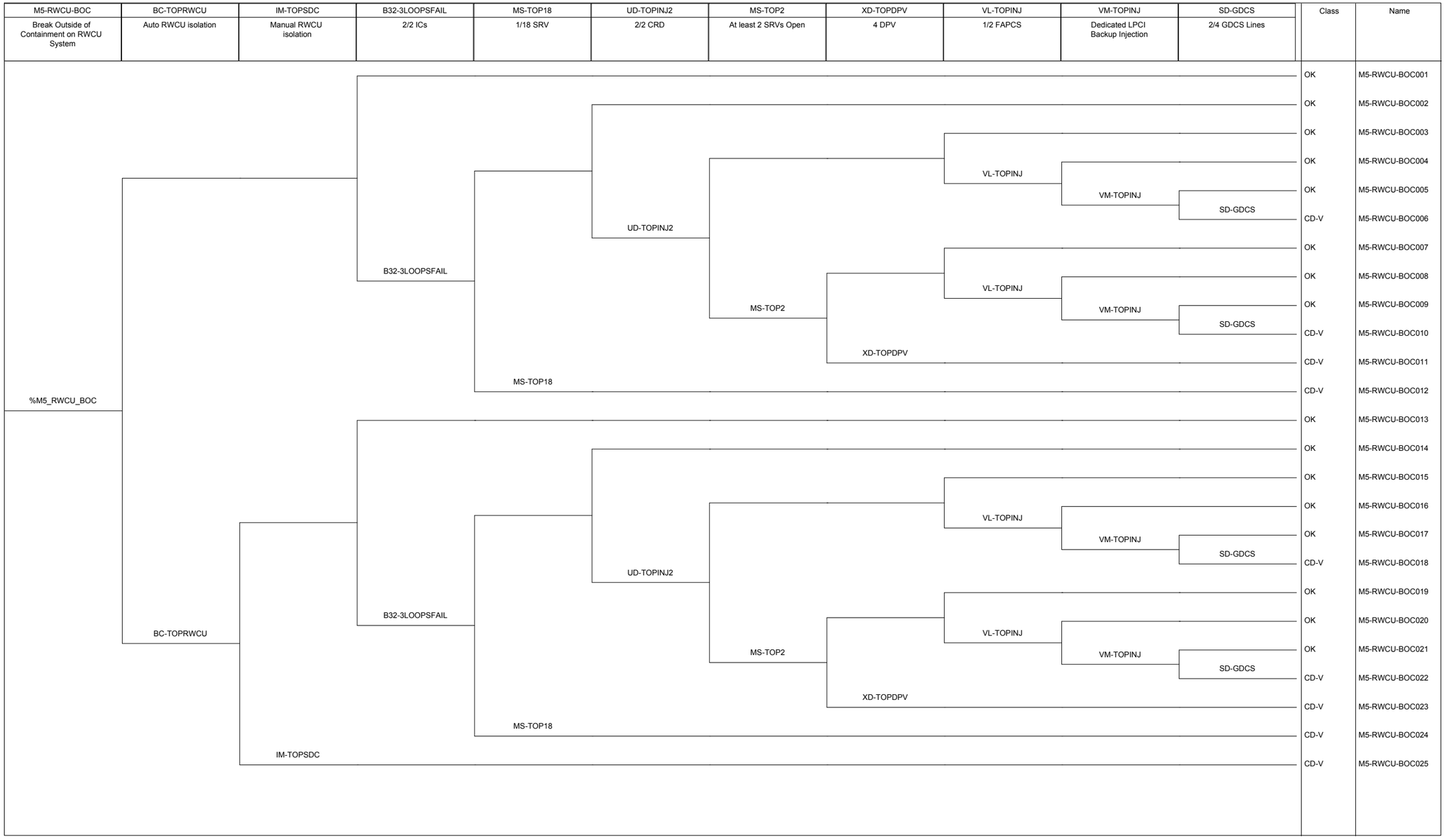

Figure 16.4-31. LOCA – RWCU break outside containment (Mode 5)

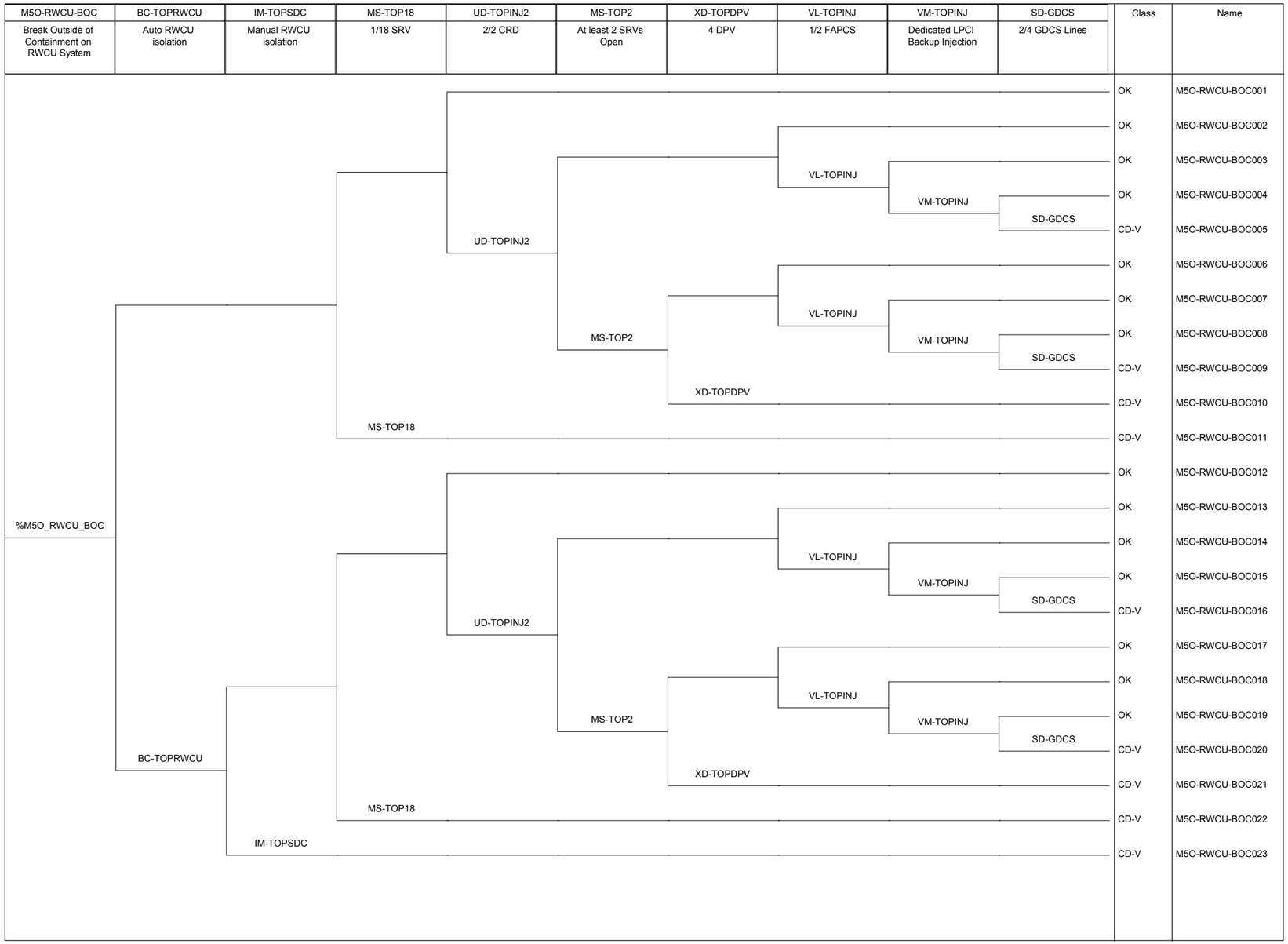

Figure 16.4-32. LOCA – RWCU break outside containment (Mode 5 Open)

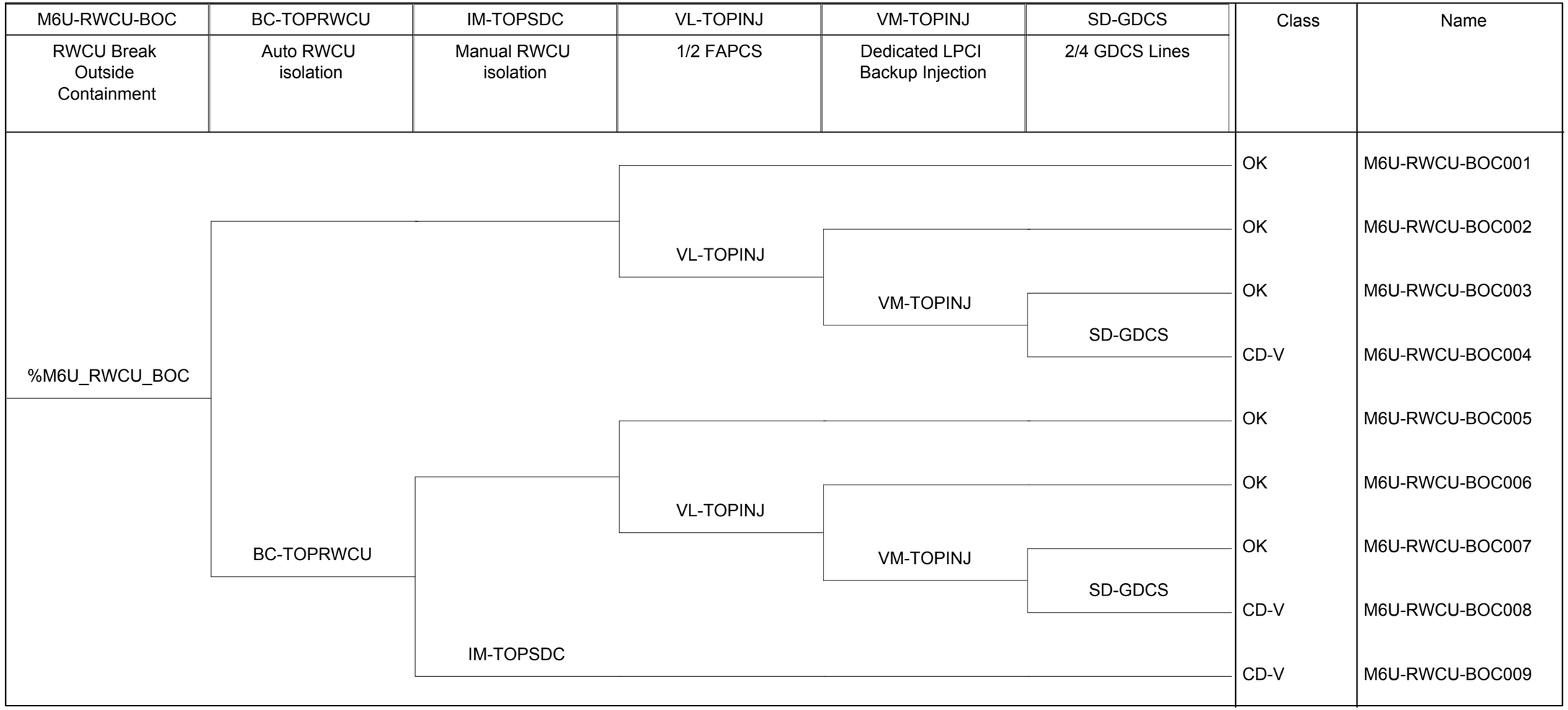

Figure 16.4-33. LOCA – RWCU break outside containment (Mode 6 Unflooded)

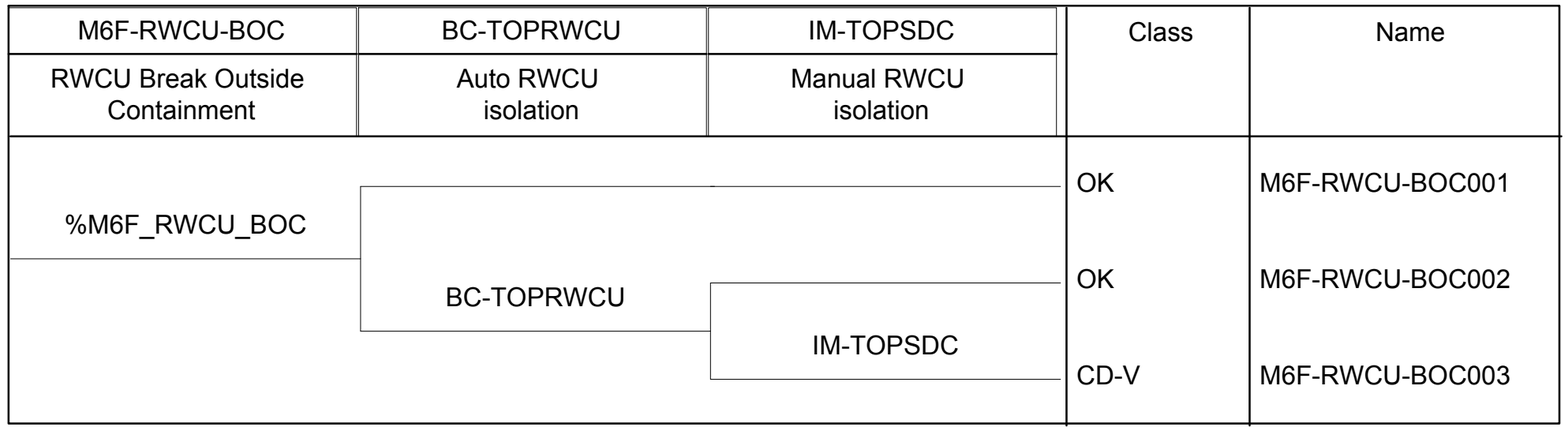

Figure 16.4-34. LOCA – RWCU break outside containment (Mode 6 Flooded)

.

16.5 SYSTEM ANALYSIS

This section describes the fault trees used in the Shutdown PRA evaluation. The unavailability of a system to perform its safety function on demand is evaluated by fault tree analysis.

The necessary fault trees are identified following construction of the event trees. These fault trees represent the nodes included in the event trees.

Maximum use is made of the fault trees developed for the Full Power PRA. Potential differences between the full power and the shutdown fault tree models may result from:

- Differences in maintenance unavailabilities,
- Differences in success criteria between full power and shutdown condition,
- Differences in initial system configuration between full power and shutdown condition,
- Differences in human actions.

Maintenance events used in the full power model are not adjusted for the shutdown. This treatment is conservative. Technical Specification requirements are different for some systems during shutdown. For example, four GDCS injection lines are allowed to be out of service in Mode 5. Any maintenance is likely to be performed on one of the lines allowed out of service by Tech Specs. Taking one pool and four lines out due to Tech Specs, and leaving the maintenance events in for the ones still in service is conservative.

The following paragraphs discuss the cases where modifications were made to the full power fault tree logic to reflect the shutdown conditions.

16.5.1 Reactor Water Cleanup / Shutdown Cooling System

The logic used for RWCU in the shutdown model is the same as is used in the full power model with only slight variation. The RWCU/SDC function modeled in shutdown is the restart of at least one RWCU train after a LOPP event, including operator action to re-start the system (it is assumed to not be automatically sequenced on upon diesel generator startup). The full power model has the system in cleanup mode and has several valve position changes modeled to switch the system to the shutdown cooling mode. These position changes are not required in shutdown since the system is in SDC mode for the duration of shutdown. Several of the basic events associate with the changing of the system from cleanup mode to SDC mode have been flagged to FALSE. The system is operating in SDC mode for all of shutdown, and only needs to restart following a LOPP. The failures flagged out of the model are not credible failures during shutdown.

Maintenance is expected to be performed mostly during full power operation, when only one train is operating. Nevertheless, the same maintenance unavailability as used for the full power PRA is conservatively used in the shutdown evaluation.

16.5.2 Control Rod Drive System

It is assumed that during the entire shutdown period a single CRD pump is running (providing purge flow to FMCRD and/or the RWCU/SDC pumps) and the second pump is in standby, which is the same initial configuration as at full power.

Additionally, it is assumed that no automatic initiation of CRD injection is available and alignment in RPV injection mode requires operator action. The same action in the fault tree for the full power model is used for the shutdown analysis. The automatic actuation of the system on RPV Level 2 is removed from the shutdown analysis with the use of flag files. In the full power fault tree, there is AND gate under system actuation. One branch of the AND gate has the automatic actuation and all the logic associated with it. The other branch of the AND gate has the operator action to initiate CRD injection. For the shutdown analysis, the gate with the automatic actuation is set to TRUE, so that the system is entirely dependant on the operator action.

16.5.3 Gravity Driven Cooling System

Technical Specification requirements for the GDCS during shutdown are different than during full power operations. For shutdown modes (5 and 6) only 4 out of the 8 GDCS injection lines are required to be available, and only 2 of 3 pools are required to be available. For the shutdown model, it is assumed that the larger GDCS pool is unavailable. For successful GDCS at least one line from each available pool must open. To ensure cooling for 72 hours at least one equalizing line is also required to open. Logic associated with the internal events GDCS is used with some slight adjustment. The two available pools are in an OR gate so that even though only two lines are needed, it has to be a combination of two lines from the two different pools. Two lines from one pool and no lines from the other pool is failure. The logic associated with the available pools is logically OR'd with success of the equalizing lines. The four equalizing lines are under an AND gate since opening of only one line is needed to meet the success criteria.

For shutdown modeling, a new top has been created, but all of the logic in the fault tree under the top is included in the internal events GDCS fault tree.

16.5.4 Isolation Condenser System

Technical Specification requirements for the ICS are different than during full power operations. The system will not function in Mode 6 with the vessel head removed and it has not been credited in any Mode 6 event trees. During Mode 5, only 2 out of the 4 IC units are required to be available. Level 1 logic (with a unique top requiring 2 out of 4 loops) for ICS is used for the shutdown analysis with two of the four loops flagged TRUE (failed). Success of ICS in shutdown is proper functioning of 2/2 ICS loops (as opposed to 2/4 during full power). ICS is conservatively assumed to be unavailable in Mode 5 Open and is removed in the Mode 5 Open event trees.

16.5.5 Fuel and Auxiliary Pool Cooling System (FAPCS)

The Level 1 fault trees for FAPCS (both before and after ADS) are left unchanged and used in the shutdown analysis. The system is required to operate during shutdown in fuel pool cooling mode, and it is the primary shutdown cooling backup for RWCU/SDC.

The system has no automatic actuation of low-pressure injection and is dependent on operator initiation for all functions credited in the shutdown analysis.

16.5.6 FAPCS – Dedicated LPCI Backup Pump

The Level 1 fault trees for dedicated LPCI backup pump are left unchanged and used in the shutdown analysis. FAPCS and Fire Protection (suction source) requirements at the plant are not likely dependant on the reactor modes.

The system has no automatic actuation of low-pressure injection, and is dependant on operator initiation for all functions credited in the shutdown analysis.

16.5.7 18/18 SRVs Fail to Open in Relief Mode

This logic is modeled in the full power PRA. It represents the failure of all 18/18 SRVs to open in overpressure protection during a transient that challenges the RPV pressure. For overpressure protection, 1 of 18 SRVs must open in relief mode. The only cutset that exists for the logic (when the individual system is quantified with a truncation of 1E-16) is the common cause failure of both SRV groups. There is one group of 10 and one group of 8 SRVs. The two groups are diverse enough not to be common cause grouped together. The one cutset that shows up has a value of 2.2E-13. For the shutdown analysis, this top event was treated as a point estimate with a failure rate of 1E-12.

16.5.8 MS-TOP2 – At Least 2 SRVs Open

This logic is also treated with a point estimate for the shutdown analysis. Manual depressurization is modeled in the Level 1 analysis. Failure of the operator action to depressurize is two orders of magnitude higher than any equipment failures. To simplify modeling, this whole heading is treated as a point estimate with a value of 5E-2 (one failure in twenty). That value is higher than the operator action screening value used in Chapter 4 Subsection 4.1 (Depressurization System) for the manual depressurization logic.

16.5.9 BC-TOPRWCU – Automatic Isolation of RWCU/SDC

This is the same heading as is used for the full power model. However, the DPS function used in this logic is unavailable. The RWCU isolation valves get a safety related close signal from each of the four safety-related DCIS divisions. As a backup, the system isolation valves normally get a redundant closure signal from the DPS system. The DPS system is not required to be operable during shutdown modes. This backup signal is not credited in the shutdown model.

Table 16.5-1

System Maintenance Unavailabilities During Shutdown

System	Mode 5	Mode 6	Observations
ICS	As at full power	Out of service	Maintenance expected in Mode 6, with vessel depressurized.
RWCU/SDC	As at full power	As at full power	1 or 2 trains operating. Maintenance expected to be carried out during full power on one train while the other train operates in RWCU mode.
ADS/SRV	As at full power	Out of service	Maintenance expected in Mode 6, with vessel depressurized.
Feedwater and condensate	Higher maintenance unavailability	Higher maintenance unavailability	Not credited in shutdown PRA analysis though it may be available.
CRD (injection mode)	As at full power	As at full power	Maintenance can be executed during full power on one train while the other train is in operation or on standby.
FAPCS (Include the dedicated LPCI backup injection)	As at full power	As at full power	Maintenance can be executed during full power as well as during shutdown on one train while the other is operating or on standby.
FPS	As at full power	As at full power	Maintenance can be executed during full power as well as during shutdown on one train while the other is operating or on standby.
GDCS	As in full power	Higher maintenance unavailability	Maintenance during shutdown will be performed on lines and pools allowed out of service by Tech specs.
PCCS	As at full power	Out of service	Not credited in shutdown PRA analysis though it may be available for Mode 5 while containment is still intact. Maintenance expected in Mode 6, with vessel depressurized and containment open
RCCWS	As at full power	As at full power	Maintenance can be executed during full power as well as during shutdown
PSWS	As at full power	As at full power	Maintenance can be executed during full power as well as during shutdown
Service/Instrument Air	As at full power	As at full power	Maintenance can be executed during full power as well as during shutdown
HPNSS	As at full power	As at full power	Maintenance can be executed during full power as well as during shutdown
13.8 kV Power Distribution	As at full power	As at full power	It is assumed that any bus, power center or MCC can be maintained during power operation.
Diesel Generators	As at full power	As at full power	It is assumed that one DG at a time can be maintained during power operation

Table 16.5-1

System Maintenance Unavailabilities During Shutdown

System	Mode 5	Mode 6	Observations
Uninterruptible AC Power	As at full power	As at full power	It is assumed that any bus, power center or MCC can be maintained during power operation.
250V DC Power	As at full power	As at full power	It is assumed that any division can be maintained during power operation.

16.6 QUANTIFICATION RESULTS

The shutdown accident sequence analysis models the impacts on the following two critical safety functions during shutdown:

- Decay Heat Removal,
- Reactor Coolant System Inventory Control.

Initiating event types, and associated frequencies, are identified that challenge the above critical safety functions (refer to Subsection 16.3). Event trees are developed specific to the shutdown configurations (refer to Subsection 16.4) and the system fault tree analysis is based on at-power fault tree models adjusted to match shutdown conditions (refer to Subsection 16.5). The model development and quantification is performed using CAFTA and FORTE. The quantification of baseline model was performed at a truncation limit of 1E-15/year and all sensitivities were performed at a truncation limit of 1E-14/year.

16.6.1 Baseline Shutdown PRA Results

The core damage frequency results of the ESBWR shutdown risk analysis are summarized in the following table:

- Table 16.6-1: Shutdown CDF by Initiating Event and by Mode of Operation,
- Table 16.6-3: Internal Events Shutdown PRA Cutset Report,
- Table 16.6-4: Internal Events Shutdown PRA Importance Measure Report (Fussell-Vesely (F-V) Importance Measure greater than or equal to 0.005, or Risk Achievement Worth (RAW) greater than or equal to 2),
- Table 16.6-5: Shutdown PRA Core Damage Sequences.

As can be seen from these tables, the calculated shutdown CDF is 1.70E-8/year.

All evaluated shutdown core damage events are assumed to result in a large release because of the potential for the containment being open during the outage. CCFP is not affected because the containment is not being used as a mitigating system during shutdown.

DCD Tier 2, Chapter 19, Subsection 19.2.1 states the following goals for a design-specific PRA:

The design-specific PRA results and insights are compared against the following goals (note: these are goals and not regulatory requirements) and address how the plant features properly balance severe accident prevention and mitigation:

- Determine how the risk associated with the design compares against the Commission's goals of less than 1E-4/year for core damage frequency (CDF),
- Determine how the risk associated with the design compares against the Commission's goals of less than 1E-6/year for large release frequency (LRF).

The ESBWR shutdown results are well within these documented goals:

	CDF	LRF
ESBWR Shutdown:	1.70E-08	1.70E-08 (assumes all events bypass containment)

Chapter 19 goals: 1.0E-4 1.0E-6

The above result and all others presented below are presented on a yearly basis for comparison with NRC goals. To obtain a yearly shutdown risk with a once every two year refueling schedule, all initiating event frequencies were multiplied by a factor of 0.5.

The presented shutdown results should not be added to the full power results for a combined one year CDF value. There are large differences in uncertainty between the two models and simple addition of the two may provide unreasonable results.

16.6.2 Shutdown Sensitivity

The following sections show various sensitivity analyses run with the shutdown PRA.

16.6.2.1 LOCA Frequency

Due to the lower temperatures and pressures in the RPV during shutdown, a reduction factor was applied to LOCA frequencies for the shutdown PRA. The basis for the reduction is in Subsection 16.3.1.2.1 above. This sensitivity case shows the results with no reduction factor applied.

Baseline Results = 1.63E-8/year (with a truncation limit of 1E-14/year)

Sensitivity Results = 9.42E-8/year

This case results in almost an order of magnitude increase in core damage frequency. Contribution from LOCA sequences makes up over 50% of the baseline result. In the results from this sensitivity, LOCA sequences makeup up over 91% of the CDF contribution. The results for the entire shutdown are heavily influenced by LOCA frequencies and how they are determined significantly influences the results.

Even with no reduction factor applied to LOCA frequencies, the results are still well below the NRC stated goals for a design certification PRA.

16.6.2.2 Lower Drywell Hatch Sensitivity

Almost as important to the shutdown PRA results as LOCA frequencies is closure of the lower drywell hatch. Failure to close the hatch in the event of a lower drywell LOCA is assumed to lead to core damage. Two “below TAF LOCA” events are evaluated in each mode for a total of eight. The top four cutsets (and 8 of the top 16) are those LOCA events with drywell hatch closure failure. Those eight cutsets account for about half of the total shutdown CDF.

Two “hatch closure” events are included in the model. In one case (instrument line LOCA) 360 minutes are available to close the hatch; in the other case (RWCU drain line) 90 minutes are available. Both times are based on the time available to close the hatch given a worst-case pipe break. Screening values have been used in the baseline case for the operator action to close the hatch. A failure probability of 0.01 is applied to the case with 360 minutes available for the action. A failure probability of 0.1 is applied to the case with 90 minutes available.

Three sensitivity cases have been analyzed.

(1) Case 1 applies a higher failure rate for both hatch closure events. DWH-1 (90 minutes) and DWH-2 (360 minutes) are both given a 0.5 failure probability (50% failure rate).

- Case 1 Results = 3.48E-7/year.
- More than an order of magnitude increase compared to the baseline shutdown CDF. The increase in the DWH-2 number leads to a large increase in shutdown CDF.

(2) Case 2 gives the screen value (0.01 – one failure in 100) to both hatch closure failure events.

- Case 2 Results = 1.45E-8/year.
- A decrease compared to the base case, but not a large one. This is due to the fact that the instrument line LOCA scenarios are the dominant contributors, whose event trees have already used the screen value of 0.01.

(3) Case 3 assumes no lower drywell entry is allowed until Mode 6. This eliminates the Mode 5 and Mode 5 Open sequences that include drywell hatch closure.

- Case 3 Results = 1.25E-8/year.
- Case results in about a 23% reduction in CDF compared to base case. This is due to the impact the lower drywell LOCA events has on the results. Any restrictions put on entering (ensuring the hatch closed) would result in a decrease in CDF.

As is the case with the LOCA frequencies, any results are going to be a direct reflection of the numbers used for the action to close the lower drywell hatch. The two events are in only eight sequences, but those are eight of the top 16 cutsets and account for over 50% of the total baseline shutdown CDF.

16.6.2.3 Operator Action Sensitivity

During shutdown, the plant relies on operators much more for accident mitigation than during at power conditions. Several systems have no automatic actuation and rely on operators to initiate (FPS, FAPCS, Dedicated LPCI Backup Pump, and CRD). Human actions are the only barrier between the initiating events and core damage for LOCA events below the TAF. In addition to the contribution of human errors during shutdown, many systems that do not require human action are in a reduced capacity during shutdown conditions (IC having only 2 out of 4 loops available).

Two operator action sensitivity cases are evaluated.

(1) Case 1 has all recover actions set to TRUE (failed). This eliminates several systems from possible accident mitigation. CRD (during shutdown), FAPCS (primary and dedicated LPCI) and manual depressurization are all completely dependant on human action to initiate. RWCU/SDC also requires operator action following LOPP.

- Case 1 Results = 5.76E-6/year
- Results show more than a two order of magnitude increase in CDF over the baseline case. The plant has features to safeguard against possible transients, but during shutdown, the configuration of the plant requires operators to take action to put those systems into service. For many sequences in this case, the CDF value is equal to the initiating event value.

(2) Case 2 has all recovery actions given a much lower than usual human error probability: 1.0E-3. This number is about an order of magnitude lower than most modeled human actions. It shows how CDF could be affected if credit is taken for very effective operator response to transients.

- Case 2 Results = 1.14E-9/year
- Results show a decrease in CDF of over one order of magnitude compared to the base shutdown case. The top cutsets in this case are still dominated by human errors. Even with the reduced failure values, the human errors are still generally higher than the common cause equipment failures that show up in the top cutsets with the human errors.

The Shutdown PRA is somewhat sensitive to human errors. Many of the plants passive safety features are unavailable due to the conditions of shutdown (PCCS, ICS in Mode 6). In Mode 6, only one system that is not entirely dependant on operators is available to prevent CDF (GDCS).

16.6.2.4 RPV Draindown Initiating Event Frequency

The initiating event frequency for RPV draindown events used in the ESBWR shutdown PRA analysis is lower than the initiating event value developed in EPRI 1003113. The use of the lower frequency is based on design improvement of the ESBWR RWCU system compared to current BWR RHR systems, as well as a review of the RWCU P&ID drawings. This sensitivity case shows the results with the EPRI developed initiating event frequency (i.e., 2.80E-5 per hour) applied to the shutdown PRA sequences.

Baseline Results = 1.63E-8/year (with a truncation limit of 1E-14/year)

Sensitivity Results = 2.58E-8/year

There is an increase in the shutdown CDF when using the initiating event frequency developed by EPRI for RPV draindown events. The CDF increases by nearly 58% over the baseline shutdown case. RPV leaks account for about 30% of the CDF in the base case. They account for by far the largest contribution after LOCA events. In this sensitivity case, CDF contribution from draindown events increases to 56%. Although there is a notable increase in CDF with the EPRI value, the results are still within the NRC stated goals for CDF and LERF.

The basis for the reduced frequency of a draindown event is reasonable. The RWCU system has very few possible leak or diversion paths (non-LOCA) and almost all are small lines under 50.8 mm (2 inches). A review of the incidents used to develop the EPRI value showed very few of the events are relevant based on the ESBWR design.

Additionally, the risk associated with draindown events (especially in Mode 6) may be overestimated. The cases with the largest contribution are generally Mode 6 Unflooded cases where the RWCU system is isolated, but no alternate decay heat removal source is successful. These cases account for about 21% of the overall baseline CDF. In these cases, no credit was taken for water in the pools above the vessel, or fire pump hoses in the reactor building. In these cases, the vessel head and the containment head are removed, and the RPV is open to the refueling floor of the reactor building. Makeup to the reactor well/RPV would be available from one or several of the pools in the reactor building. This would require operators opening a valve to cross connect the pools to the reactor well. FPS pumps pumping to these pools, or a FPS

pump truck connected to the building would also possibly provide additional water to the vessel in these scenarios. No credit was taken for this makeup either.

16.6.2.5 ICS Operability with elevated water level

There is a small disparity between how the modes are defined in the Technical Specification and how they are treated in the Shutdown PRA. Technical Specifications state that Mode 6 is entered when the first head bolt is detensioned. For the Shutdown PRA Mode 6 is defined as having the vessel head no longer providing a pressure seal. This is likely some time after detensioning the first bolt but before vessel head removal.

Mode 6 does not take credit for ICS. For conservatism, ICS is also not credited in Mode 5 Open. Therefore, this sensitivity study is not performed for the current version of the shutdown model.

Table 16.6-1

Shutdown CDF by Initiating Event and by Mode of Operation

Initiating Event	CDF	% Of Total	Mode	CDF
Loss of PSWS	3.74E-11	0.22%	5	5.30E-09
Loss of RWCU/SDC	6.04E-10	3.55%		
Loss of Pref Power	6.43E-10	3.78%		
LOCA - RWCU/SDC below TAF	7.16E-10	4.21%		
LOCA - Other than FW or GDCS	4.05E-12	0.02%		
LOCA - FW Line A	9.18E-13	0.01%		
LOCA - Instrument Line below TAF	2.36E-09	13.90%		
LOCA - GDCS	2.62E-13	0.00%		
LOCA – RWCU Break Outside Cont.	6.49E-12	0.04%		
RPV Leak or Diversion	9.25E-10	5.44%		
Loss of PSWS	3.40E-11	0.20%	5 Open	2.73E-09
Loss of RWCU/SDC	4.96E-10	2.92%		
Loss of Pref Power	6.80E-10	4.00%		
LOCA - RWCU/SDC below TAF	1.79E-10	1.05%		
LOCA - Other than FW or GDCS	9.66E-13	0.01%		
LOCA - FW Line A	2.11E-13	0.00%		
LOCA - Instrument Line below TAF	5.88E-10	3.46%		
LOCA - GDCS	5.76E-14	0.00%		
LOCA – RWCU Break Outside Cont.	4.85E-12	0.03%		
RPV Leak or Diversion	7.51E-10	4.42%		
Loss of PSWS	2.41E-11	0.14%	6 Unflooded	5.13E-09
Loss of RWCU/SDC	3.09E-10	1.82%		
Loss of Pref Power	3.81E-10	2.24%		
LOCA - RWCU/SDC below TAF	2.23E-10	1.31%		
LOCA - Other than FW or GDCS	3.66E-14	0.00%		
LOCA - FW Line A	2.72E-13	0.00%		
LOCA - Instrument Line below TAF	7.34E-10	4.32%		
LOCA - GDCS	0.00E+00	0.00%		
LOCA – RWCU Break Outside Cont.	2.65E-11	0.16%		
RPV Leak or Diversion	3.43E-09	20.20%		
LOCA - Instrument Line below TAF	2.94E-09	17.30%	6 Flooded	3.85E-09
LOCA - RWCU/SDC below TAF	8.94E-10	5.26%		
LOCA – RWCU Break Outside Cont.	8.45E-14	0.00%		
RPV Leak or Diversion	1.24E-11	0.07%		
Total	**1.70E-08**			**1.70E-08**

Table 16.6-2

Shutdown CDF by Accident Class (DELETED)

Table 16.6-3

Internal Events Shutdown PRA Cutset Report

Cutsets with Descriptions Report Internal Events Shutdown Core Damage Frequency = 1.70E-08 /year Top 200 Cutsets				
#	**Cutset Prob**	**Event Prob**	**Event**	**Description**
1	2.93E-09	2.93E-07	%M6F_LOCA_I	LOCA - INSTRUMENT LINE BELOW TAF - MODE 6 FLOODED
		1.00E-02	DWH-2	DRYWELL HATCH CLOSURE FAILURE
2	2.35E-09	2.35E-07	%M5_LOCA_I	LOCA - INSTRUMENT LINE BELOW TAF - MODE 5
		1.00E-02	DWH-2	DRYWELL HATCH CLOSURE FAILURE
3	8.92E-10	8.92E-09	%M6F_LOCA_RW	LOCA - RWCU LINE BELWO TAF - MODE 6 FLOODED
		1.00E-01	DWH-1	DRYWELL HATCH CLOSURE FAILURE (90MIN)
4	7.33E-10	7.33E-08	%M6U_LOCA_I	LOCA IN INSTRUMENT LINE - MODE 6 UNFLOODED
		1.00E-02	DWH-2	DRYWELL HATCH CLOSURE FAILURE
5	7.25E-10	3.00E-04	%M6U_RPVLEAK	RPV LEAK - MODE 6 UNFLOODED
		3.00E-04	E50-SQV-CC-EQU_ALL	CCF of all components in group 'E50-SQV-CC-EQU'
		5.00E-01	LEAK-ISO	RWCU LEAK ISOLATED
		1.61E-02	XXX-XHE-FO-LPMAKEUP	OP. FAILS TO RECOG. NEED FOR LOW PRESS. MAKEUP AFTER DEPRESSURIZATION
6	7.13E-10	7.13E-09	%M5_LOCA_RW	LOCA BELOW TAF IN RWCU
		1.00E-01	DWH-1	DRYWELL HATCH CLOSURE FAILURE (90MIN)
7	6.35E-10	3.00E-04	%M6U_RPVLEAK	RPV LEAK - MODE 6 UNFLOODED
		2.63E-04	E50-BV_-OC-F004A	MAINTENANCE VALVE F004A PLUGS/TRANSFERS CLOSED
		5.00E-01	LEAK-ISO	RWCU LEAK ISOLATED
		1.61E-02	XXX-XHE-FO-LPMAKEUP	OP. FAILS TO RECOG. NEED FOR LOW PRESS. MAKEUP AFTER DEPRESSURIZATION

Table 16.6-3

Internal Events Shutdown PRA Cutset Report

Cutsets with Descriptions Report Internal Events Shutdown Core Damage Frequency = 1.70E-08 /year Top 200 Cutsets				
#	**Cutset Prob**	**Event Prob**	**Event**	**Description**
8	6.35E-10	3.00E-04	%M6U_RPVLEAK	RPV LEAK - MODE 6 UNFLOODED
		2.63E-04	E50-BV_-OC-F004D	MAINTENANCE VALVE F004D PLUGS/TRANSFERS CLOSED
		5.00E-01	LEAK-ISO	RWCU LEAK ISOLATED
		1.61E-02	XXX-XHE-FO-LPMAKEUP	OP. FAILS TO RECOG. NEED FOR LOW PRESS. MAKEUP AFTER DEPRESSURIZATION
9	5.86E-10	5.86E-08	%M5O_LOCA_I	LOCA - INSTRUMENT LINE BLEOW TAF - MODE 5 OPEN
		1.00E-02	DWH-2	DRYWELL HATCH CLOSURE FAILURE
10	3.62E-10	3.00E-04	%M6U_RPVLEAK	RPV LEAK - MODE 6 UNFLOODED
		1.50E-04	E50-SQV-CC-INJ_ALL	CCF of all components in group 'E50-SQV-CC-INJ'
		5.00E-01	LEAK-ISO	RWCU LEAK ISOLATED
		1.61E-02	XXX-XHE-FO-LPMAKEUP	OP. FAILS TO RECOG. NEED FOR LOW PRESS. MAKEUP AFTER DEPRESSURIZATION
11	2.42E-10	3.00E-04	%M6U_RPVLEAK	RPV LEAK - MODE 6 UNFLOODED
		1.00E-04	C63-CCFSOFTWARE	Common cause failure of software
		5.00E-01	LEAK-ISO	RWCU LEAK ISOLATED
		1.61E-02	XXX-XHE-FO-LPMAKEUP	OP. FAILS TO RECOG. NEED FOR LOW PRESS. MAKEUP AFTER DEPRESSURIZATION
12	2.23E-10	2.23E-09	%M6U_LOCA_RW	LOCA - RWCU BELWO TAF - MODE 6 UNLFLOODED
		1.00E-01	DWH-1	DRYWELL HATCH CLOSURE FAILURE (90MIN)
13	1.78E-10	1.78E-09	%M5O_LOCA_RW	LOCA - RWCU LOCA BELOW TAF - MODE 5 OPEN
		1.00E-01	DWH-1	DRYWELL HATCH CLOSURE FAILURE (90MIN)
14	1.11E-10	3.02E-03	%M5_G31	LOSS OF RWCU - MODE 5
		3.21E-02	C12-XHE-FO-LEVEL2	Operator fails to back-up CRD actuation
		1.00E-04	C63-CCFSOFTWARE	Common cause failure of software
		5.00E-02	MS-TOP2	TWO SRVs FAIL TO OPEN (MANUAL)
		2.29E-01	R-M5-G31	RWCU/SDC RECOVERY

Table 16.6-3

Internal Events Shutdown PRA Cutset Report

Cutsets with Descriptions Report Internal Events Shutdown Core Damage Frequency = 1.70E-08 /year Top 200 Cutsets				
#	**Cutset Prob**	**Event Prob**	**Event**	**Description**
15	7.70E-11	9.60E-04	%M5_RPVLEAK	RPV LEAK - MODE 5
		3.21E-02	C12-XHE-FO-LEVEL2	Operator fails to back-up CRD actuation
		1.00E-04	C63-CCFSOFTWARE	Common cause failure of software
		5.00E-01	LEAK-ISO	RWCU LEAK ISOLATED
		5.00E-02	MS-TOP2	TWO SRVs FAIL TO OPEN (MANUAL)
16	7.25E-11	3.00E-04	%M6U_RPVLEAK	RPV LEAK - MODE 6 UNFLOODED
		3.00E-05	C63-DTM-FC-ESFLG_ALL	CCF of all components in group 'C63-DTM-FC-ESFLG'
		5.00E-01	LEAK-ISO	RWCU LEAK ISOLATED
		1.61E-02	XXX-XHE-FO-LPMAKEUP	OP. FAILS TO RECOG. NEED FOR LOW PRESS. MAKEUP AFTER DEPRESSURIZATION
17	5.75E-11	3.00E-04	%M6U_RPVLEAK	RPV LEAK - MODE 6 UNFLOODED
		2.38E-05	E50-SQV-CC-INJ_1_5	CCF of two components: E50-SQV-CC-INJ-F002A & E50-SQV-CC-INJ-F002E
		5.00E-01	LEAK-ISO	RWCU LEAK ISOLATED
		1.61E-02	XXX-XHE-FO-LPMAKEUP	OP. FAILS TO RECOG. NEED FOR LOW PRESS. MAKEUP AFTER DEPRESSURIZATION
18	5.75E-11	3.00E-04	%M6U_RPVLEAK	RPV LEAK - MODE 6 UNFLOODED
		2.38E-05	E50-SQV-CC-INJ_4_8	CCF of two components: E50-SQV-CC-INJ-F002D & E50-SQV-CC-INJ-F002H
		5.00E-01	LEAK-ISO	RWCU LEAK ISOLATED
		1.61E-02	XXX-XHE-FO-LPMAKEUP	OP. FAILS TO RECOG. NEED FOR LOW PRESS. MAKEUP AFTER DEPRESSURIZATION
19	4.35E-11	3.00E-04	%M6U_RPVLEAK	RPV LEAK - MODE 6 UNFLOODED
		1.80E-05	C63-LOG-FC-ESFLG_ALL	CCF of all components in group 'C63-LOG-FC-ESFLG'
		5.00E-01	LEAK-ISO	RWCU LEAK ISOLATED
		1.61E-02	XXX-XHE-FO-LPMAKEUP	OP. FAILS TO RECOG. NEED FOR LOW PRESS. MAKEUP AFTER DEPRESSURIZATION

Table 16.6-3

Internal Events Shutdown PRA Cutset Report

Cutsets with Descriptions Report Internal Events Shutdown Core Damage Frequency = 1.70E-08 /year Top 200 Cutsets				
#	**Cutset Prob**	**Event Prob**	**Event**	**Description**
20	4.17E-11	7.56E-04	%M5O_G31	LOSS OF RWCU MODE 5 OPEN
		1.50E-04	B21-SQV-CC_ALL	CCF of all components in group 'B21-SQV-CC'
		3.21E-02	C12-XHE-FO-LEVEL2	Operator fails to back-up CRD actuation
		5.00E-02	MS-TOP2	TWO SRVs FAIL TO OPEN (MANUAL)
		2.29E-01	R-M5-G31	RWCU/SDC RECOVERY
21	4.15E-11	3.00E-04	%M6U_RPVLEAK	RPV LEAK - MODE 6 UNFLOODED
		1.72E-05	E50-UV_-CC-INJ_ALL	CCF of all components in group 'E50-UV_-CC-INJ'
		5.00E-01	LEAK-ISO	RWCU LEAK ISOLATED
		1.61E-02	XXX-XHE-FO-LPMAKEUP	OP. FAILS TO RECOG. NEED FOR LOW PRESS. MAKEUP AFTER DEPRESSURIZATION
22	3.57E-11	3.02E-03	%M5_G31	LOSS OF RWCU - MODE 5
		3.21E-02	C12-XHE-FO-LEVEL2	Operator fails to back-up CRD actuation
		1.00E-04	C63-CCFSOFTWARE	Common cause failure of software
		2.29E-01	R-M5-G31	RWCU/SDC RECOVERY
		1.61E-02	XXX-XHE-FO-LPMAKEUP	OP. FAILS TO RECOG. NEED FOR LOW PRESS. MAKEUP AFTER DEPRESSURIZATION
23	3.33E-11	3.02E-03	%M5_G31	LOSS OF RWCU - MODE 5
		3.21E-02	C12-XHE-FO-LEVEL2	Operator fails to back-up CRD actuation
		3.00E-05	C63-DTM-FC-ESFLG_ALL	CCF of all components in group 'C63-DTM-FC-ESFLG'
		5.00E-02	MS-TOP2	TWO SRVs FAIL TO OPEN (MANUAL)
		2.29E-01	R-M5-G31	RWCU/SDC RECOVERY

Table 16.6-3

Internal Events Shutdown PRA Cutset Report

Cutsets with Descriptions Report Internal Events Shutdown Core Damage Frequency = 1.70E-08 /year Top 200 Cutsets				
#	**Cutset Prob**	**Event Prob**	**Event**	**Description**
24	3.19E-11	9.45E-04	%M6U_G31	LOSS OF RWCU - MODE 6 UNFLOODED
		3.21E-02	C12-XHE-FO-LEVEL2	Operator fails to back-up CRD actuation
		3.00E-04	E50-SQV-CC-EQU_ALL	CCF of all components in group 'E50-SQV-CC-EQU'
		2.18E-01	R-M6-G31	FAILURE TO RECOVER RWCU/SDC
		1.61E-02	XXX-XHE-FO-LPMAKEUP	OP. FAILS TO RECOG. NEED FOR LOW PRESS. MAKEUP AFTER DEPRESSURIZATION
25	2.90E-11	9.60E-04	%M5_RPVLEAK	RPV LEAK - MODE 5
		1.21E-02	C12-BV_-RE-F003B	MISPOSITION OF VALVE F003B
		1.00E-04	C63-CCFSOFTWARE	Common cause failure of software
		5.00E-01	LEAK-ISO	RWCU LEAK ISOLATED
		5.00E-02	MS-TOP2	TWO SRVs FAIL TO OPEN (MANUAL)
26	2.90E-11	9.60E-04	%M5_RPVLEAK	RPV LEAK - MODE 5
		1.21E-02	C12-BV_-RE-F018A	MISPOSITION OF VALVE F018A
		1.00E-04	C63-CCFSOFTWARE	Common cause failure of software
		5.00E-01	LEAK-ISO	RWCU LEAK ISOLATED
		5.00E-02	MS-TOP2	TWO SRVs FAIL TO OPEN (MANUAL)
27	2.90E-11	9.60E-04	%M5_RPVLEAK	RPV LEAK - MODE 5
		1.21E-02	C12-BV_-RE-F018B	MISPOSITION OF VALVE FO18B
		1.00E-04	C63-CCFSOFTWARE	Common cause failure of software
		5.00E-01	LEAK-ISO	RWCU LEAK ISOLATED
		5.00E-02	MS-TOP2	TWO SRVs FAIL TO OPEN (MANUAL)

Table 16.6-3

Internal Events Shutdown PRA Cutset Report

Cutsets with Descriptions Report Internal Events Shutdown Core Damage Frequency = 1.70E-08 /year Top 200 Cutsets				
#	**Cutset Prob**	**Event Prob**	**Event**	**Description**
28	2.90E-11	9.60E-04	%M5_RPVLEAK	RPV LEAK - MODE 5
		1.21E-02	C12-BV_-RE-F021A	MISPOSITION OF VALVE F021A
		1.00E-04	C63-CCFSOFTWARE	Common cause failure of software
		5.00E-01	LEAK-ISO	RWCU LEAK ISOLATED
		5.00E-02	MS-TOP2	TWO SRVs FAIL TO OPEN (MANUAL)
29	2.90E-11	9.60E-04	%M5_RPVLEAK	RPV LEAK - MODE 5
		1.21E-02	C12-BV_-RE-F021B	MISPOSITION OF VALVE F021B
		1.00E-04	C63-CCFSOFTWARE	Common cause failure of software
		5.00E-01	LEAK-ISO	RWCU LEAK ISOLATED
		5.00E-02	MS-TOP2	TWO SRVs FAIL TO OPEN (MANUAL)
30	2.90E-11	3.00E-04	%M6U_RPVLEAK	RPV LEAK - MODE 6 UNFLOODED
		1.20E-05	E50-STR-PG_ALL	CCF of all components in group 'E50-STR-PG'
		5.00E-01	LEAK-ISO	RWCU LEAK ISOLATED
		1.61E-02	XXX-XHE-FO-LPMAKEUP	OP. FAILS TO RECOG. NEED FOR LOW PRESS. MAKEUP AFTER DEPRESSURIZATION
31	2.89E-11	2.40E-04	%M5O_RPVLEAK	RPV LEAK - MODE 5 OPEN
		1.50E-04	B21-SQV-CC_ALL	CCF of all components in group 'B21-SQV-CC'
		3.21E-02	C12-XHE-FO-LEVEL2	Operator fails to back-up CRD actuation
		5.00E-01	LEAK-ISO	RWCU LEAK ISOLATED
		5.00E-02	MS-TOP2	TWO SRVs FAIL TO OPEN (MANUAL)
32	2.80E-11	9.45E-04	%M6U_G31	LOSS OF RWCU - MODE 6 UNFLOODED
		3.21E-02	C12-XHE-FO-LEVEL2	Operator fails to back-up CRD actuation
		2.63E-04	E50-BV_-OC-F004A	MAINTENANCE VALVE F004A PLUGS/TRANSFERS CLOSED
		2.18E-01	R-M6-G31	FAILURE TO RECOVER RWCU/SDC
		1.61E-02	XXX-XHE-FO-LPMAKEUP	OP. FAILS TO RECOG. NEED FOR LOW PRESS. MAKEUP AFTER DEPRESSURIZATION

Table 16.6-3

Internal Events Shutdown PRA Cutset Report

Cutsets with Descriptions Report Internal Events Shutdown Core Damage Frequency = 1.70E-08 /year Top 200 Cutsets				
#	**Cutset Prob**	**Event Prob**	**Event**	**Description**
33	2.80E-11	9.45E-04	%M6U_G31	LOSS OF RWCU - MODE 6 UNFLOODED
		3.21E-02	C12-XHE-FO-LEVEL2	Operator fails to back-up CRD actuation
		2.63E-04	E50-BV_-OC-F004D	MAINTENANCE VALVE F004D PLUGS/TRANSFERS CLOSED
		2.18E-01	R-M6-G31	FAILURE TO RECOVER RWCU/SDC
		1.61E-02	XXX-XHE-FO-LPMAKEUP	OP. FAILS TO RECOG. NEED FOR LOW PRESS. MAKEUP AFTER DEPRESSURIZATION
34	2.78E-11	7.56E-04	%M5O_G31	LOSS OF RWCU MODE 5 OPEN
		3.21E-02	C12-XHE-FO-LEVEL2	Operator fails to back-up CRD actuation
		1.00E-04	C63-CCFSOFTWARE	Common cause failure of software
		5.00E-02	MS-TOP2	TWO SRVs FAIL TO OPEN (MANUAL)
		2.29E-01	R-M5-G31	RWCU/SDC RECOVERY
35	2.75E-11	3.00E-04	%M6U_RPVLEAK	RPV LEAK - MODE 6 UNFLOODED
		5.00E-01	LEAK-ISO	RWCU LEAK ISOLATED
		1.14E-05	R13-INV-FC-CCFSR_ALL	CCF of all components in group 'R13-INV-FC-CCFSR'
		1.61E-02	XXX-XHE-FO-LPMAKEUP	OP. FAILS TO RECOG. NEED FOR LOW PRESS. MAKEUP AFTER DEPRESSURIZATION
36	2.68E-11	7.56E-04	%M5O_G31	LOSS OF RWCU MODE 5 OPEN
		3.21E-02	C12-XHE-FO-LEVEL2	Operator fails to back-up CRD actuation
		3.00E-04	E50-SQV-CC-EQU_ALL	CCF of all components in group 'E50-SQV-CC-EQU'
		2.29E-01	R-M5-G31	RWCU/SDC RECOVERY
		1.61E-02	XXX-XHE-FO-LPMAKEUP	OP. FAILS TO RECOG. NEED FOR LOW PRESS. MAKEUP AFTER DEPRESSURIZATION

Table 16.6-3

Internal Events Shutdown PRA Cutset Report

Cutsets with Descriptions Report Internal Events Shutdown Core Damage Frequency = 1.70E-08 /year Top 200 Cutsets				
#	**Cutset Prob**	**Event Prob**	**Event**	**Description**
37	2.48E-11	9.60E-04	%M5_RPVLEAK	RPV LEAK - MODE 5
		3.21E-02	C12-XHE-FO-LEVEL2	Operator fails to back-up CRD actuation
		1.00E-04	C63-CCFSOFTWARE	Common cause failure of software
		5.00E-01	LEAK-ISO	RWCU LEAK ISOLATED
		1.61E-02	XXX-XHE-FO-LPMAKEUP	OP. FAILS TO RECOG. NEED FOR LOW PRESS. MAKEUP AFTER DEPRESSURIZATION
38	2.35E-11	7.56E-04	%M5O_G31	LOSS OF RWCU MODE 5 OPEN
		3.21E-02	C12-XHE-FO-LEVEL2	Operator fails to back-up CRD actuation
		2.63E-04	E50-BV_-OC-F004A	MAINTENANCE VALVE F004A PLUGS/TRANSFERS CLOSED
		2.29E-01	R-M5-G31	RWCU/SDC RECOVERY
		1.61E-02	XXX-XHE-FO-LPMAKEUP	OP. FAILS TO RECOG. NEED FOR LOW PRESS. MAKEUP AFTER DEPRESSURIZATION
39	2.35E-11	7.56E-04	%M5O_G31	LOSS OF RWCU MODE 5 OPEN
		3.21E-02	C12-XHE-FO-LEVEL2	Operator fails to back-up CRD actuation
		2.63E-04	E50-BV_-OC-F004D	MAINTENANCE VALVE F004D PLUGS/TRANSFERS CLOSED
		2.29E-01	R-M5-G31	RWCU/SDC RECOVERY
		1.61E-02	XXX-XHE-FO-LPMAKEUP	OP. FAILS TO RECOG. NEED FOR LOW PRESS. MAKEUP AFTER DEPRESSURIZATION
40	2.32E-11	3.00E-04	%M6U_RPVLEAK	RPV LEAK - MODE 6 UNFLOODED
		9.60E-06	E50-SQV-CO-F009A	SQUIB DELUGE VALVE F009A SPUR. OPENING [#7]
		5.00E-01	LEAK-ISO	RWCU LEAK ISOLATED
		1.61E-02	XXX-XHE-FO-LPMAKEUP	OP. FAILS TO RECOG. NEED FOR LOW PRESS. MAKEUP AFTER DEPRESSURIZATION

Table 16.6-3

Internal Events Shutdown PRA Cutset Report

Cutsets with Descriptions Report Internal Events Shutdown Core Damage Frequency = 1.70E-08 /year Top 200 Cutsets				
#	**Cutset Prob**	**Event Prob**	**Event**	**Description**
41	2.32E-11	3.00E-04	%M6U_RPVLEAK	RPV LEAK - MODE 6 UNFLOODED
		9.60E-06	E50-SQV-CO-F009D	SQUIB DELUGE VALVE F009D SPUR. OPENING [#7]
		5.00E-01	LEAK-ISO	RWCU LEAK ISOLATED
		1.61E-02	XXX-XHE-FO-LPMAKEUP	OP. FAILS TO RECOG. NEED FOR LOW PRESS. MAKEUP AFTER DEPRESSURIZATION
42	2.32E-11	3.00E-04	%M6U_RPVLEAK	RPV LEAK - MODE 6 UNFLOODED
		9.60E-06	E50-SQV-CO-F009E	SQUIB DELUGE VALVE F009E SPUR. OPENING [#7]
		5.00E-01	LEAK-ISO	RWCU LEAK ISOLATED
		1.61E-02	XXX-XHE-FO-LPMAKEUP	OP. FAILS TO RECOG. NEED FOR LOW PRESS. MAKEUP AFTER DEPRESSURIZATION
43	2.32E-11	3.00E-04	%M6U_RPVLEAK	RPV LEAK - MODE 6 UNFLOODED
		9.60E-06	E50-SQV-CO-F009H	SQUIB DELUGE VALVE F009H SPUR. OPENING [#7]
		5.00E-01	LEAK-ISO	RWCU LEAK ISOLATED
		1.61E-02	XXX-XHE-FO-LPMAKEUP	OP. FAILS TO RECOG. NEED FOR LOW PRESS. MAKEUP AFTER DEPRESSURIZATION
44	2.32E-11	3.00E-04	%M6U_RPVLEAK	RPV LEAK - MODE 6 UNFLOODED
		9.60E-06	E50-SQV-CO-F009J	SQUIB DELUGE VALVE F009J SPUR. OPENING [#7]
		5.00E-01	LEAK-ISO	RWCU LEAK ISOLATED
		1.61E-02	XXX-XHE-FO-LPMAKEUP	OP. FAILS TO RECOG. NEED FOR LOW PRESS. MAKEUP AFTER DEPRESSURIZATION
45	2.32E-11	3.00E-04	%M6U_RPVLEAK	RPV LEAK - MODE 6 UNFLOODED
		9.60E-06	E50-SQV-CO-F009M	SQUIB DELUGE VALVE F009M SPUR. OPENING [#7]
		5.00E-01	LEAK-ISO	RWCU LEAK ISOLATED
		1.61E-02	XXX-XHE-FO-LPMAKEUP	OP. FAILS TO RECOG. NEED FOR LOW PRESS. MAKEUP AFTER DEPRESSURIZATION

Table 16.6-3

Internal Events Shutdown PRA Cutset Report

Cutsets with Descriptions Report Internal Events Shutdown Core Damage Frequency = 1.70E-08 /year Top 200 Cutsets				
#	**Cutset Prob**	**Event Prob**	**Event**	**Description**
46	2.31E-11	9.60E-04	%M5_RPVLEAK	RPV LEAK - MODE 5
		3.21E-02	C12-XHE-FO-LEVEL2	Operator fails to back-up CRD actuation
		3.00E-05	C63-DTM-FC-ESFLG_ALL	CCF of all components in group 'C63-DTM-FC-ESFLG'
		5.00E-01	LEAK-ISO	RWCU LEAK ISOLATED
		5.00E-02	MS-TOP2	TWO SRVs FAIL TO OPEN (MANUAL)
47	2.17E-11	3.00E-04	%M6U_RPVLEAK	RPV LEAK - MODE 6 UNFLOODED
		3.00E-03	E50-SQV-CC-INJ-F002A	SQUIB VALVE F002A FAILS TO OPERATE
		3.00E-03	E50-SQV-CC-INJ-F002E	SQUIB VALVE F002E FAILS TO OPERATE
		5.00E-01	LEAK-ISO	RWCU LEAK ISOLATED
		1.61E-02	XXX-XHE-FO-LPMAKEUP	OP. FAILS TO RECOG. NEED FOR LOW PRESS. MAKEUP AFTER DEPRESSURIZATION
48	2.17E-11	3.00E-04	%M6U_RPVLEAK	RPV LEAK - MODE 6 UNFLOODED
		3.00E-03	E50-SQV-CC-INJ-F002D	SQUIB VALVE F002D FAILS TO OPERATE
		3.00E-03	E50-SQV-CC-INJ-F002H	SQUIB VALVE F002H FAILS TO OPERATE
		5.00E-01	LEAK-ISO	RWCU LEAK ISOLATED
		1.61E-02	XXX-XHE-FO-LPMAKEUP	OP. FAILS TO RECOG. NEED FOR LOW PRESS. MAKEUP AFTER DEPRESSURIZATION
49	2.00E-11	3.00E-04	%M6U_RPVLEAK	RPV LEAK - MODE 6 UNFLOODED
		3.00E-04	E50-SQV-CC-EQU_ALL	CCF of all components in group 'E50-SQV-CC-EQU'
		4.44E-04	G21-MOV-CC-2_1_2	CCF of two components: G21-MOV-CC-F332A & G21-MOV-CC-F332B
		5.00E-01	LEAK-ISO	RWCU LEAK ISOLATED
50	2.00E-11	3.02E-03	%M5_G31	LOSS OF RWCU - MODE 5
		3.21E-02	C12-XHE-FO-LEVEL2	Operator fails to back-up CRD actuation
		1.80E-05	C63-LOG-FC-ESFLG_ALL	CCF of all components in group 'C63-LOG-FC-ESFLG'
		5.00E-02	MS-TOP2	TWO SRVs FAIL TO OPEN (MANUAL)
		2.29E-01	R-M5-G31	RWCU/SDC RECOVERY

Table 16.6-3

Internal Events Shutdown PRA Cutset Report

Cutsets with Descriptions Report Internal Events Shutdown Core Damage Frequency = 1.70E-08 /year Top 200 Cutsets				
#	**Cutset Prob**	**Event Prob**	**Event**	**Description**
51	1.93E-11	2.40E-04	%M5O_RPVLEAK	RPV LEAK - MODE 5 OPEN
		3.21E-02	C12-XHE-FO-LEVEL2	Operator fails to back-up CRD actuation
		1.00E-04	C63-CCFSOFTWARE	Common cause failure of software
		5.00E-01	LEAK-ISO	RWCU LEAK ISOLATED
		5.00E-02	MS-TOP2	TWO SRVs FAIL TO OPEN (MANUAL)
52	1.86E-11	2.40E-04	%M5O_RPVLEAK	RPV LEAK - MODE 5 OPEN
		3.21E-02	C12-XHE-FO-LEVEL2	Operator fails to back-up CRD actuation
		3.00E-04	E50-SQV-CC-EQU_ALL	CCF of all components in group 'E50-SQV-CC-EQU'
		5.00E-01	LEAK-ISO	RWCU LEAK ISOLATED
		1.61E-02	XXX-XHE-FO-LPMAKEUP	OP. FAILS TO RECOG. NEED FOR LOW PRESS. MAKEUP AFTER DEPRESSURIZATION
53	1.75E-11	3.00E-04	%M6U_RPVLEAK	RPV LEAK - MODE 6 UNFLOODED
		2.63E-04	E50-BV_-OC-F004A	MAINTENANCE VALVE F004A PLUGS/TRANSFERS CLOSED
		4.44E-04	G21-MOV-CC-2_1_2	CCF of two components: G21-MOV-CC-F332A & G21-MOV-CC-F332B
		5.00E-01	LEAK-ISO	RWCU LEAK ISOLATED
54	1.75E-11	3.00E-04	%M6U_RPVLEAK	RPV LEAK - MODE 6 UNFLOODED
		2.63E-04	E50-BV_-OC-F004D	MAINTENANCE VALVE F004D PLUGS/TRANSFERS CLOSED
		4.44E-04	G21-MOV-CC-2_1_2	CCF of two components: G21-MOV-CC-F332A & G21-MOV-CC-F332B
		5.00E-01	LEAK-ISO	RWCU LEAK ISOLATED
55	1.74E-11	3.00E-04	%M6U_RPVLEAK	RPV LEAK - MODE 6 UNFLOODED
		7.20E-06	E50-POL-RP-POOLA	GDCS POOLS A LEAKS CATASTROPHICALLY
		5.00E-01	LEAK-ISO	RWCU LEAK ISOLATED
		1.61E-02	XXX-XHE-FO-LPMAKEUP	OP. FAILS TO RECOG. NEED FOR LOW PRESS. MAKEUP AFTER DEPRESSURIZATION

Table 16.6-3

Internal Events Shutdown PRA Cutset Report

Cutsets with Descriptions Report Internal Events Shutdown Core Damage Frequency = 1.70E-08 /year Top 200 Cutsets				
#	**Cutset Prob**	**Event Prob**	**Event**	**Description**
56	1.74E-11	3.00E-04	%M6U_RPVLEAK	RPV LEAK - MODE 6 UNFLOODED
		7.20E-06	E50-POL-RP-POOLD	GDCS POOL D LEAKS CATASTROPHICALLY
		5.00E-01	LEAK-ISO	RWCU LEAK ISOLATED
		1.61E-02	XXX-XHE-FO-LPMAKEUP	OP. FAILS TO RECOG. NEED FOR LOW PRESS. MAKEUP AFTER DEPRESSURIZATION
57	1.74E-11	3.00E-04	%M6U_RPVLEAK	RPV LEAK - MODE 6 UNFLOODED
		5.00E-01	LEAK-ISO	RWCU LEAK ISOLATED
		7.20E-06	T23-POL-RP-SP	SUPPRESSION POOL LEAKS CATASTROPHICALLY
		1.61E-02	XXX-XHE-FO-LPMAKEUP	OP. FAILS TO RECOG. NEED FOR LOW PRESS. MAKEUP AFTER DEPRESSURIZATION
58	1.63E-11	2.40E-04	%M5O_RPVLEAK	RPV LEAK - MODE 5 OPEN
		3.21E-02	C12-XHE-FO-LEVEL2	Operator fails to back-up CRD actuation
		2.63E-04	E50-BV_-OC-F004A	MAINTENANCE VALVE F004A PLUGS/TRANSFERS CLOSED
		5.00E-01	LEAK-ISO	RWCU LEAK ISOLATED
		1.61E-02	XXX-XHE-FO-LPMAKEUP	OP. FAILS TO RECOG. NEED FOR LOW PRESS. MAKEUP AFTER DEPRESSURIZATION
59	1.63E-11	2.40E-04	%M5O_RPVLEAK	RPV LEAK - MODE 5 OPEN
		3.21E-02	C12-XHE-FO-LEVEL2	Operator fails to back-up CRD actuation
		2.63E-04	E50-BV_-OC-F004D	MAINTENANCE VALVE F004D PLUGS/TRANSFERS CLOSED
		5.00E-01	LEAK-ISO	RWCU LEAK ISOLATED
		1.61E-02	XXX-XHE-FO-LPMAKEUP	OP. FAILS TO RECOG. NEED FOR LOW PRESS. MAKEUP AFTER DEPRESSURIZATION

Table 16.6-3

Internal Events Shutdown PRA Cutset Report

Cutsets with Descriptions Report Internal Events Shutdown Core Damage Frequency = 1.70E-08 /year Top 200 Cutsets				
#	**Cutset Prob**	**Event Prob**	**Event**	**Description**
60	1.60E-11	9.45E-04	%M6U_G31	LOSS OF RWCU - MODE 6 UNFLOODED
		3.21E-02	C12-XHE-FO-LEVEL2	Operator fails to back-up CRD actuation
		1.50E-04	E50-SQV-CC-INJ_ALL	CCF of all components in group 'E50-SQV-CC-INJ'
		2.18E-01	R-M6-G31	FAILURE TO RECOVER RWCU/SDC
		1.61E-02	XXX-XHE-FO-LPMAKEUP	OP. FAILS TO RECOG. NEED FOR LOW PRESS. MAKEUP AFTER DEPRESSURIZATION
61	1.39E-11	9.60E-04	%M5_RPVLEAK	RPV LEAK - MODE 5
		3.21E-02	C12-XHE-FO-LEVEL2	Operator fails to back-up CRD actuation
		1.80E-05	C63-LOG-FC-ESFLG_ALL	CCF of all components in group 'C63-LOG-FC-ESFLG'
		5.00E-01	LEAK-ISO	RWCU LEAK ISOLATED
		5.00E-02	MS-TOP2	TWO SRVs FAIL TO OPEN (MANUAL)
62	1.38E-11	3.02E-03	%M5_G31	LOSS OF RWCU - MODE 5
		4.00E-03	C12-MOV-CC-F023	MOTOR OPERATED VALVE F023 FAILS TO OPEN
		1.00E-04	C63-CCFSOFTWARE	Common cause failure of software
		5.00E-02	MS-TOP2	TWO SRVs FAIL TO OPEN (MANUAL)
		2.29E-01	R-M5-G31	RWCU/SDC RECOVERY
63	1.38E-11	3.02E-03	%M5_G31	LOSS OF RWCU - MODE 5
		4.00E-03	C12-MOV-OO-F024	MOTOR OPERATED VALVE F024 FAILS TO CLOSE
		1.00E-04	C63-CCFSOFTWARE	Common cause failure of software
		5.00E-02	MS-TOP2	TWO SRVs FAIL TO OPEN (MANUAL)
		2.29E-01	R-M5-G31	RWCU/SDC RECOVERY

Table 16.6-3

Internal Events Shutdown PRA Cutset Report

Cutsets with Descriptions Report Internal Events Shutdown Core Damage Frequency = 1.70E-08 /year Top 200 Cutsets				
#	**Cutset Prob**	**Event Prob**	**Event**	**Description**
64	1.38E-11	3.02E-03	%M5_G31	LOSS OF RWCU - MODE 5
		4.00E-03	C12-MOV-OO-F062A	MOTOR OPERATED VALVE F062A FAILS TO CLOSE
		1.00E-04	C63-CCFSOFTWARE	Common cause failure of software
		5.00E-02	MS-TOP2	TWO SRVs FAIL TO OPEN (MANUAL)
		2.29E-01	R-M5-G31	RWCU/SDC RECOVERY
65	1.38E-11	3.02E-03	%M5_G31	LOSS OF RWCU - MODE 5
		4.00E-03	C12-MOV-OO-F062B	MOTOR OPERATED VALVE F062B FAILS TO CLOSE
		1.00E-04	C63-CCFSOFTWARE	Common cause failure of software
		5.00E-02	MS-TOP2	TWO SRVs FAIL TO OPEN (MANUAL)
		2.29E-01	R-M5-G31	RWCU/SDC RECOVERY
66	1.34E-11	7.56E-04	%M5O_G31	LOSS OF RWCU MODE 5 OPEN
		1.50E-04	B21-SQV-CC_ALL	CCF of all components in group 'B21-SQV-CC'
		3.21E-02	C12-XHE-FO-LEVEL2	Operator fails to back-up CRD actuation
		2.29E-01	R-M5-G31	RWCU/SDC RECOVERY
		1.61E-02	XXX-XHE-FO-LPMAKEUP	OP. FAILS TO RECOG. NEED FOR LOW PRESS. MAKEUP AFTER DEPRESSURIZATION
67	1.34E-11	7.56E-04	%M5O_G31	LOSS OF RWCU MODE 5 OPEN
		3.21E-02	C12-XHE-FO-LEVEL2	Operator fails to back-up CRD actuation
		1.50E-04	E50-SQV-CC-INJ_ALL	CCF of all components in group 'E50-SQV-CC-INJ'
		2.29E-01	R-M5-G31	RWCU/SDC RECOVERY
		1.61E-02	XXX-XHE-FO-LPMAKEUP	OP. FAILS TO RECOG. NEED FOR LOW PRESS. MAKEUP AFTER DEPRESSURIZATION
68	1.21E-11	1.06E-05	%M5_LPSWS	LOSS OF PLANT SERVICE WATER - MODE 5
		1.00E-04	C63-CCFSOFTWARE	Common cause failure of software
		5.00E-02	MS-TOP2	TWO SRVs FAIL TO OPEN (MANUAL)
		2.29E-01	R-M5-PSWS	SERVICE WATER RECOVERY

Table 16.6-3

Internal Events Shutdown PRA Cutset Report

Cutsets with Descriptions Report Internal Events Shutdown Core Damage Frequency = 1.70E-08 /year Top 200 Cutsets				
#	**Cutset Prob**	**Event Prob**	**Event**	**Description**
69	1.09E-11	2.40E-04	%M5O_RPVLEAK	RPV LEAK - MODE 5 OPEN
		1.50E-04	B21-SQV-CC_ALL	CCF of all components in group 'B21-SQV-CC'
		1.21E-02	C12-BV_-RE-F003B	MISPOSITION OF VALVE F003B
		5.00E-01	LEAK-ISO	RWCU LEAK ISOLATED
		5.00E-02	MS-TOP2	TWO SRVs FAIL TO OPEN (MANUAL)
70	1.09E-11	2.40E-04	%M5O_RPVLEAK	RPV LEAK - MODE 5 OPEN
		1.50E-04	B21-SQV-CC_ALL	CCF of all components in group 'B21-SQV-CC'
		1.21E-02	C12-BV_-RE-F018A	MISPOSITION OF VALVE F018A
		5.00E-01	LEAK-ISO	RWCU LEAK ISOLATED
		5.00E-02	MS-TOP2	TWO SRVs FAIL TO OPEN (MANUAL)
71	1.09E-11	2.40E-04	%M5O_RPVLEAK	RPV LEAK - MODE 5 OPEN
		1.50E-04	B21-SQV-CC_ALL	CCF of all components in group 'B21-SQV-CC'
		1.21E-02	C12-BV_-RE-F018B	MISPOSITION OF VALVE FO18B
		5.00E-01	LEAK-ISO	RWCU LEAK ISOLATED
		5.00E-02	MS-TOP2	TWO SRVs FAIL TO OPEN (MANUAL)
72	1.09E-11	2.40E-04	%M5O_RPVLEAK	RPV LEAK - MODE 5 OPEN
		1.50E-04	B21-SQV-CC_ALL	CCF of all components in group 'B21-SQV-CC'
		1.21E-02	C12-BV_-RE-F021A	MISPOSITION OF VALVE F021A
		5.00E-01	LEAK-ISO	RWCU LEAK ISOLATED
		5.00E-02	MS-TOP2	TWO SRVs FAIL TO OPEN (MANUAL)
73	1.09E-11	2.40E-04	%M5O_RPVLEAK	RPV LEAK - MODE 5 OPEN
		1.50E-04	B21-SQV-CC_ALL	CCF of all components in group 'B21-SQV-CC'
		1.21E-02	C12-BV_-RE-F021B	MISPOSITION OF VALVE F021B
		5.00E-01	LEAK-ISO	RWCU LEAK ISOLATED
		5.00E-02	MS-TOP2	TWO SRVs FAIL TO OPEN (MANUAL)

Table 16.6-3

Internal Events Shutdown PRA Cutset Report

Cutsets with Descriptions Report Internal Events Shutdown Core Damage Frequency = 1.70E-08 /year Top 200 Cutsets				
#	**Cutset Prob**	**Event Prob**	**Event**	**Description**
74	1.07E-11	3.02E-03	%M5_G31	LOSS OF RWCU - MODE 5
		3.21E-02	C12-XHE-FO-LEVEL2	Operator fails to back-up CRD actuation
		3.00E-05	C63-DTM-FC-ESFLG_ALL	CCF of all components in group 'C63-DTM-FC-ESFLG'
		2.29E-01	R-M5-G31	RWCU/SDC RECOVERY
		1.61E-02	XXX-XHE-FO-LPMAKEUP	OP. FAILS TO RECOG. NEED FOR LOW PRESS. MAKEUP AFTER DEPRESSURIZATION
75	1.06E-11	9.45E-04	%M6U_G31	LOSS OF RWCU - MODE 6 UNFLOODED
		3.21E-02	C12-XHE-FO-LEVEL2	Operator fails to back-up CRD actuation
		1.00E-04	C63-CCFSOFTWARE	Common cause failure of software
		2.18E-01	R-M6-G31	FAILURE TO RECOVER RWCU/SDC
		1.61E-02	XXX-XHE-FO-LPMAKEUP	OP. FAILS TO RECOG. NEED FOR LOW PRESS. MAKEUP AFTER DEPRESSURIZATION
76	1.00E-11	3.00E-04	%M6U_RPVLEAK	RPV LEAK - MODE 6 UNFLOODED
		1.50E-04	E50-SQV-CC-INJ_ALL	CCF of all components in group 'E50-SQV-CC-INJ'
		4.44E-04	G21-MOV-CC-2_1_2	CCF of two components: G21-MOV-CC-F332A & G21-MOV-CC-F332B
		5.00E-01	LEAK-ISO	RWCU LEAK ISOLATED
77	9.60E-12	9.60E-04	%M5_RPVLEAK	RPV LEAK - MODE 5
		4.00E-03	C12-MOV-CC-F020A	MOTOR OPER. VALVE F020A FAILS TO OPEN
		1.00E-04	C63-CCFSOFTWARE	Common cause failure of software
		5.00E-01	LEAK-ISO	RWCU LEAK ISOLATED
		5.00E-02	MS-TOP2	TWO SRVs FAIL TO OPEN (MANUAL)
78	9.60E-12	9.60E-04	%M5_RPVLEAK	RPV LEAK - MODE 5
		4.00E-03	C12-MOV-CC-F020B	MOTOR OPER. VALVE F020B FAILS TO OPEN
		1.00E-04	C63-CCFSOFTWARE	Common cause failure of software
		5.00E-01	LEAK-ISO	RWCU LEAK ISOLATED
		5.00E-02	MS-TOP2	TWO SRVs FAIL TO OPEN (MANUAL)

Table 16.6-3

Internal Events Shutdown PRA Cutset Report

Cutsets with Descriptions Report Internal Events Shutdown Core Damage Frequency = 1.70E-08 /year Top 200 Cutsets				
#	**Cutset Prob**	**Event Prob**	**Event**	**Description**
79	9.60E-12	9.60E-04	%M5_RPVLEAK	RPV LEAK - MODE 5
		4.00E-03	C12-MOV-CC-F023	MOTOR OPERATED VALVE F023 FAILS TO OPEN
		1.00E-04	C63-CCFSOFTWARE	Common cause failure of software
		5.00E-01	LEAK-ISO	RWCU LEAK ISOLATED
		5.00E-02	MS-TOP2	TWO SRVs FAIL TO OPEN (MANUAL)
80	9.60E-12	9.60E-04	%M5_RPVLEAK	RPV LEAK - MODE 5
		4.00E-03	C12-MOV-OO-F024	MOTOR OPERATED VALVE F024 FAILS TO CLOSE
		1.00E-04	C63-CCFSOFTWARE	Common cause failure of software
		5.00E-01	LEAK-ISO	RWCU LEAK ISOLATED
		5.00E-02	MS-TOP2	TWO SRVs FAIL TO OPEN (MANUAL)
81	9.60E-12	9.60E-04	%M5_RPVLEAK	RPV LEAK - MODE 5
		4.00E-03	C12-MOV-OO-F062A	MOTOR OPERATED VALVE F062A FAILS TO CLOSE
		1.00E-04	C63-CCFSOFTWARE	Common cause failure of software
		5.00E-01	LEAK-ISO	RWCU LEAK ISOLATED
		5.00E-02	MS-TOP2	TWO SRVs FAIL TO OPEN (MANUAL)
82	9.60E-12	9.60E-04	%M5_RPVLEAK	RPV LEAK - MODE 5
		4.00E-03	C12-MOV-OO-F062B	MOTOR OPERATED VALVE F062B FAILS TO CLOSE
		1.00E-04	C63-CCFSOFTWARE	Common cause failure of software
		5.00E-01	LEAK-ISO	RWCU LEAK ISOLATED
		5.00E-02	MS-TOP2	TWO SRVs FAIL TO OPEN (MANUAL)

Table 16.6-3

Internal Events Shutdown PRA Cutset Report

Cutsets with Descriptions Report Internal Events Shutdown Core Damage Frequency = 1.70E-08 /year Top 200 Cutsets				
#	**Cutset Prob**	**Event Prob**	**Event**	**Description**
83	9.35E-12	9.60E-04	%M5_RPVLEAK	RPV LEAK - MODE 5
		1.21E-02	C12-BV_-RE-F003B	MISPOSITION OF VALVE F003B
		1.00E-04	C63-CCFSOFTWARE	Common cause failure of software
		5.00E-01	LEAK-ISO	RWCU LEAK ISOLATED
		1.61E-02	XXX-XHE-FO-LPMAKEUP	OP. FAILS TO RECOG. NEED FOR LOW PRESS. MAKEUP AFTER DEPRESSURIZATION
84	9.35E-12	9.60E-04	%M5_RPVLEAK	RPV LEAK - MODE 5
		1.21E-02	C12-BV_-RE-F018A	MISPOSITION OF VALVE F018A
		1.00E-04	C63-CCFSOFTWARE	Common cause failure of software
		5.00E-01	LEAK-ISO	RWCU LEAK ISOLATED
		1.61E-02	XXX-XHE-FO-LPMAKEUP	OP. FAILS TO RECOG. NEED FOR LOW PRESS. MAKEUP AFTER DEPRESSURIZATION
85	9.35E-12	9.60E-04	%M5_RPVLEAK	RPV LEAK - MODE 5
		1.21E-02	C12-BV_-RE-F018B	MISPOSITION OF VALVE FO18B
		1.00E-04	C63-CCFSOFTWARE	Common cause failure of software
		5.00E-01	LEAK-ISO	RWCU LEAK ISOLATED
		1.61E-02	XXX-XHE-FO-LPMAKEUP	OP. FAILS TO RECOG. NEED FOR LOW PRESS. MAKEUP AFTER DEPRESSURIZATION
86	9.35E-12	9.60E-04	%M5_RPVLEAK	RPV LEAK - MODE 5
		1.21E-02	C12-BV_-RE-F021A	MISPOSITION OF VALVE F021A
		1.00E-04	C63-CCFSOFTWARE	Common cause failure of software
		5.00E-01	LEAK-ISO	RWCU LEAK ISOLATED
		1.61E-02	XXX-XHE-FO-LPMAKEUP	OP. FAILS TO RECOG. NEED FOR LOW PRESS. MAKEUP AFTER DEPRESSURIZATION

Table 16.6-3

Internal Events Shutdown PRA Cutset Report

Cutsets with Descriptions Report Internal Events Shutdown Core Damage Frequency = 1.70E-08 /year Top 200 Cutsets				
#	**Cutset Prob**	**Event Prob**	**Event**	**Description**
87	9.35E-12	9.60E-04	%M5_RPVLEAK	RPV LEAK - MODE 5
		1.21E-02	C12-BV_-RE-F021B	MISPOSITION OF VALVE F021B
		1.00E-04	C63-CCFSOFTWARE	Common cause failure of software
		5.00E-01	LEAK-ISO	RWCU LEAK ISOLATED
		1.61E-02	XXX-XHE-FO-LPMAKEUP	OP. FAILS TO RECOG. NEED FOR LOW PRESS. MAKEUP AFTER DEPRESSURIZATION
88	9.30E-12	2.40E-04	%M5O_RPVLEAK	RPV LEAK - MODE 5 OPEN
		1.50E-04	B21-SQV-CC_ALL	CCF of all components in group 'B21-SQV-CC'
		3.21E-02	C12-XHE-FO-LEVEL2	Operator fails to back-up CRD actuation
		5.00E-01	LEAK-ISO	RWCU LEAK ISOLATED
		1.61E-02	XXX-XHE-FO-LPMAKEUP	OP. FAILS TO RECOG. NEED FOR LOW PRESS. MAKEUP AFTER DEPRESSURIZATION
89	9.30E-12	2.40E-04	%M5O_RPVLEAK	RPV LEAK - MODE 5 OPEN
		3.21E-02	C12-XHE-FO-LEVEL2	Operator fails to back-up CRD actuation
		1.50E-04	E50-SQV-CC-INJ_ALL	CCF of all components in group 'E50-SQV-CC-INJ'
		5.00E-01	LEAK-ISO	RWCU LEAK ISOLATED
		1.61E-02	XXX-XHE-FO-LPMAKEUP	OP. FAILS TO RECOG. NEED FOR LOW PRESS. MAKEUP AFTER DEPRESSURIZATION
90	8.95E-12	7.56E-04	%M5O_G31	LOSS OF RWCU MODE 5 OPEN
		3.21E-02	C12-XHE-FO-LEVEL2	Operator fails to back-up CRD actuation
		1.00E-04	C63-CCFSOFTWARE	Common cause failure of software
		2.29E-01	R-M5-G31	RWCU/SDC RECOVERY
		1.61E-02	XXX-XHE-FO-LPMAKEUP	OP. FAILS TO RECOG. NEED FOR LOW PRESS. MAKEUP AFTER DEPRESSURIZATION

Table 16.6-3

Internal Events Shutdown PRA Cutset Report

Cutsets with Descriptions Report Internal Events Shutdown Core Damage Frequency = 1.70E-08 /year Top 200 Cutsets				
#	**Cutset Prob**	**Event Prob**	**Event**	**Description**
91	8.71E-12	9.60E-04	%M5_RPVLEAK	RPV LEAK - MODE 5
		1.21E-02	C12-BV_-RE-F003B	MISPOSITION OF VALVE F003B
		3.00E-05	C63-DTM-FC-ESFLG_ALL	CCF of all components in group 'C63-DTM-FC-ESFLG'
		5.00E-01	LEAK-ISO	RWCU LEAK ISOLATED
		5.00E-02	MS-TOP2	TWO SRVs FAIL TO OPEN (MANUAL)
92	8.71E-12	9.60E-04	%M5_RPVLEAK	RPV LEAK - MODE 5
		1.21E-02	C12-BV_-RE-F018A	MISPOSITION OF VALVE F018A
		3.00E-05	C63-DTM-FC-ESFLG_ALL	CCF of all components in group 'C63-DTM-FC-ESFLG'
		5.00E-01	LEAK-ISO	RWCU LEAK ISOLATED
		5.00E-02	MS-TOP2	TWO SRVs FAIL TO OPEN (MANUAL)
93	8.71E-12	9.60E-04	%M5_RPVLEAK	RPV LEAK - MODE 5
		1.21E-02	C12-BV_-RE-F018B	MISPOSITION OF VALVE FO18B
		3.00E-05	C63-DTM-FC-ESFLG_ALL	CCF of all components in group 'C63-DTM-FC-ESFLG'
		5.00E-01	LEAK-ISO	RWCU LEAK ISOLATED
		5.00E-02	MS-TOP2	TWO SRVs FAIL TO OPEN (MANUAL)
94	8.71E-12	9.60E-04	%M5_RPVLEAK	RPV LEAK - MODE 5
		1.21E-02	C12-BV_-RE-F021A	MISPOSITION OF VALVE F021A
		3.00E-05	C63-DTM-FC-ESFLG_ALL	CCF of all components in group 'C63-DTM-FC-ESFLG'
		5.00E-01	LEAK-ISO	RWCU LEAK ISOLATED
		5.00E-02	MS-TOP2	TWO SRVs FAIL TO OPEN (MANUAL)
95	8.71E-12	9.60E-04	%M5_RPVLEAK	RPV LEAK - MODE 5
		1.21E-02	C12-BV_-RE-F021B	MISPOSITION OF VALVE F021B
		3.00E-05	C63-DTM-FC-ESFLG_ALL	CCF of all components in group 'C63-DTM-FC-ESFLG'
		5.00E-01	LEAK-ISO	RWCU LEAK ISOLATED
		5.00E-02	MS-TOP2	TWO SRVs FAIL TO OPEN (MANUAL)

Table 16.6-3

Internal Events Shutdown PRA Cutset Report

Cutsets with Descriptions Report Internal Events Shutdown Core Damage Frequency = 1.70E-08 /year Top 200 Cutsets				
#	**Cutset Prob**	**Event Prob**	**Event**	**Description**
96	8.34E-12	7.56E-04	%M5O_G31	LOSS OF RWCU MODE 5 OPEN
		3.21E-02	C12-XHE-FO-LEVEL2	Operator fails to back-up CRD actuation
		3.00E-05	C63-DTM-FC-ESFLG_ALL	CCF of all components in group 'C63-DTM-FC-ESFLG'
		5.00E-02	MS-TOP2	TWO SRVs FAIL TO OPEN (MANUAL)
		2.29E-01	R-M5-G31	RWCU/SDC RECOVERY
97	8.10E-12	3.02E-03	%M5_G31	LOSS OF RWCU - MODE 5
		4.84E-02	C12-BV_-RE-F013A	MISPOSITION OF VALVE F013A
		4.84E-02	C12-BV_-RE-F013B	MISPOSITION OF VALVE F013B
		1.00E-04	C63-CCFSOFTWARE	Common cause failure of software
		5.00E-02	MS-TOP2	TWO SRVs FAIL TO OPEN (MANUAL)
		2.29E-01	R-M5-G31	RWCU/SDC RECOVERY
98	8.10E-12	3.02E-03	%M5_G31	LOSS OF RWCU - MODE 5
		4.84E-02	C12-BV_-RE-F013A	MISPOSITION OF VALVE F013A
		4.84E-02	C12-BV_-RE-F015B	MISPOSITION OF VALVE F015B
		1.00E-04	C63-CCFSOFTWARE	Common cause failure of software
		5.00E-02	MS-TOP2	TWO SRVs FAIL TO OPEN (MANUAL)
		2.29E-01	R-M5-G31	RWCU/SDC RECOVERY
99	8.10E-12	3.02E-03	%M5_G31	LOSS OF RWCU - MODE 5
		4.84E-02	C12-BV_-RE-F013B	MISPOSITION OF VALVE F013B
		4.84E-02	C12-BV_-RE-F015A	MISPOSITION OF VALVE F015A
		1.00E-04	C63-CCFSOFTWARE	Common cause failure of software
		5.00E-02	MS-TOP2	TWO SRVs FAIL TO OPEN (MANUAL)
		2.29E-01	R-M5-G31	RWCU/SDC RECOVERY

Table 16.6-3

Internal Events Shutdown PRA Cutset Report

Cutsets with Descriptions Report Internal Events Shutdown Core Damage Frequency = 1.70E-08 /year Top 200 Cutsets				
#	**Cutset Prob**	**Event Prob**	**Event**	**Description**
100	8.10E-12	3.02E-03	%M5_G31	LOSS OF RWCU - MODE 5
		4.84E-02	C12-BV_-RE-F015A	MISPOSITION OF VALVE F015A
		4.84E-02	C12-BV_-RE-F015B	MISPOSITION OF VALVE F015B
		1.00E-04	C63-CCFSOFTWARE	Common cause failure of software
		5.00E-02	MS-TOP2	TWO SRVs FAIL TO OPEN (MANUAL)
		2.29E-01	R-M5-G31	RWCU/SDC RECOVERY
101	7.44E-12	9.60E-04	%M5_RPVLEAK	RPV LEAK - MODE 5
		3.21E-02	C12-XHE-FO-LEVEL2	Operator fails to back-up CRD actuation
		3.00E-05	C63-DTM-FC-ESFLG_ALL	CCF of all components in group 'C63-DTM-FC-ESFLG'
		5.00E-01	LEAK-ISO	RWCU LEAK ISOLATED
		1.61E-02	XXX-XHE-FO-LPMAKEUP	OP. FAILS TO RECOG. NEED FOR LOW PRESS. MAKEUP AFTER DEPRESSURIZATION
102	7.26E-12	2.40E-04	%M5O_RPVLEAK	RPV LEAK - MODE 5 OPEN
		1.21E-02	C12-BV_-RE-F003B	MISPOSITION OF VALVE F003B
		1.00E-04	C63-CCFSOFTWARE	Common cause failure of software
		5.00E-01	LEAK-ISO	RWCU LEAK ISOLATED
		5.00E-02	MS-TOP2	TWO SRVs FAIL TO OPEN (MANUAL)
103	7.26E-12	2.40E-04	%M5O_RPVLEAK	RPV LEAK - MODE 5 OPEN
		1.21E-02	C12-BV_-RE-F018A	MISPOSITION OF VALVE F018A
		1.00E-04	C63-CCFSOFTWARE	Common cause failure of software
		5.00E-01	LEAK-ISO	RWCU LEAK ISOLATED
		5.00E-02	MS-TOP2	TWO SRVs FAIL TO OPEN (MANUAL)

Table 16.6-3

Internal Events Shutdown PRA Cutset Report

Cutsets with Descriptions Report Internal Events Shutdown Core Damage Frequency = 1.70E-08 /year Top 200 Cutsets				
#	**Cutset Prob**	**Event Prob**	**Event**	**Description**
104	7.26E-12	2.40E-04	%M5O_RPVLEAK	RPV LEAK - MODE 5 OPEN
		1.21E-02	C12-BV_-RE-F018B	MISPOSITION OF VALVE FO18B
		1.00E-04	C63-CCFSOFTWARE	Common cause failure of software
		5.00E-01	LEAK-ISO	RWCU LEAK ISOLATED
		5.00E-02	MS-TOP2	TWO SRVs FAIL TO OPEN (MANUAL)
105	7.26E-12	2.40E-04	%M5O_RPVLEAK	RPV LEAK - MODE 5 OPEN
		1.21E-02	C12-BV_-RE-F021A	MISPOSITION OF VALVE F021A
		1.00E-04	C63-CCFSOFTWARE	Common cause failure of software
		5.00E-01	LEAK-ISO	RWCU LEAK ISOLATED
		5.00E-02	MS-TOP2	TWO SRVs FAIL TO OPEN (MANUAL)
106	7.26E-12	2.40E-04	%M5O_RPVLEAK	RPV LEAK - MODE 5 OPEN
		1.21E-02	C12-BV_-RE-F021B	MISPOSITION OF VALVE F021B
		1.00E-04	C63-CCFSOFTWARE	Common cause failure of software
		5.00E-01	LEAK-ISO	RWCU LEAK ISOLATED
		5.00E-02	MS-TOP2	TWO SRVs FAIL TO OPEN (MANUAL)
107	7.25E-12	3.00E-04	%M6U_RPVLEAK	RPV LEAK - MODE 6 UNFLOODED
		3.00E-03	E50-SQV-CC-INJ-F002A	SQUIB VALVE F002A FAILS TO OPERATE
		1.00E-03	E50-UV_-CC-INJ-F003E	INJECTION CHECK VALVE F003E FAILS TO OPEN
		5.00E-01	LEAK-ISO	RWCU LEAK ISOLATED
		1.61E-02	XXX-XHE-FO-LPMAKEUP	OP. FAILS TO RECOG. NEED FOR LOW PRESS. MAKEUP AFTER DEPRESSURIZATION

Table 16.6-3

Internal Events Shutdown PRA Cutset Report

Cutsets with Descriptions Report Internal Events Shutdown Core Damage Frequency = 1.70E-08 /year Top 200 Cutsets				
#	**Cutset Prob**	**Event Prob**	**Event**	**Description**
108	7.25E-12	3.00E-04	%M6U_RPVLEAK	RPV LEAK - MODE 6 UNFLOODED
		3.00E-03	E50-SQV-CC-INJ-F002D	SQUIB VALVE F002D FAILS TO OPERATE
		1.00E-03	E50-UV_-CC-INJ-F003H	INJECTION CHECK VALVE F003H FAILS TO OPEN
		5.00E-01	LEAK-ISO	RWCU LEAK ISOLATED
		1.61E-02	XXX-XHE-FO-LPMAKEUP	OP. FAILS TO RECOG. NEED FOR LOW PRESS. MAKEUP AFTER DEPRESSURIZATION
109	7.25E-12	3.00E-04	%M6U_RPVLEAK	RPV LEAK - MODE 6 UNFLOODED
		3.00E-03	E50-SQV-CC-INJ-F002E	SQUIB VALVE F002E FAILS TO OPERATE
		1.00E-03	E50-UV_-CC-INJ-F003A	INJECTION CHECK VALVE F003A FAILS TO OPEN
		5.00E-01	LEAK-ISO	RWCU LEAK ISOLATED
		1.61E-02	XXX-XHE-FO-LPMAKEUP	OP. FAILS TO RECOG. NEED FOR LOW PRESS. MAKEUP AFTER DEPRESSURIZATION
110	7.25E-12	3.00E-04	%M6U_RPVLEAK	RPV LEAK - MODE 6 UNFLOODED
		3.00E-03	E50-SQV-CC-INJ-F002H	SQUIB VALVE F002H FAILS TO OPERATE
		1.00E-03	E50-UV_-CC-INJ-F003D	INJECTION CHECK VALVE F003D FAILS TO OPEN
		5.00E-01	LEAK-ISO	RWCU LEAK ISOLATED
		1.61E-02	XXX-XHE-FO-LPMAKEUP	OP. FAILS TO RECOG. NEED FOR LOW PRESS. MAKEUP AFTER DEPRESSURIZATION
111	7.20E-12	9.60E-04	%M5_RPVLEAK	RPV LEAK - MODE 5
		3.00E-03	C12-SYS-TM-TRAINB	TRAIN B IN MAINTENANCE
		1.00E-04	C63-CCFSOFTWARE	Common cause failure of software
		5.00E-01	LEAK-ISO	RWCU LEAK ISOLATED
		5.00E-02	MS-TOP2	TWO SRVs FAIL TO OPEN (MANUAL)

Table 16.6-3

Internal Events Shutdown PRA Cutset Report

Cutsets with Descriptions Report Internal Events Shutdown Core Damage Frequency = 1.70E-08 /year Top 200 Cutsets				
#	**Cutset Prob**	**Event Prob**	**Event**	**Description**
112	7.01E-12	2.40E-04	%M5O_RPVLEAK	RPV LEAK - MODE 5 OPEN
		1.21E-02	C12-BV_-RE-F003B	MISPOSITION OF VALVE F003B
		3.00E-04	E50-SQV-CC-EQU_ALL	CCF of all components in group 'E50-SQV-CC-EQU'
		5.00E-01	LEAK-ISO	RWCU LEAK ISOLATED
		1.61E-02	XXX-XHE-FO-LPMAKEUP	OP. FAILS TO RECOG. NEED FOR LOW PRESS. MAKEUP AFTER DEPRESSURIZATION
113	7.01E-12	2.40E-04	%M5O_RPVLEAK	RPV LEAK - MODE 5 OPEN
		1.21E-02	C12-BV_-RE-F018A	MISPOSITION OF VALVE F018A
		3.00E-04	E50-SQV-CC-EQU_ALL	CCF of all components in group 'E50-SQV-CC-EQU'
		5.00E-01	LEAK-ISO	RWCU LEAK ISOLATED
		1.61E-02	XXX-XHE-FO-LPMAKEUP	OP. FAILS TO RECOG. NEED FOR LOW PRESS. MAKEUP AFTER DEPRESSURIZATION
114	7.01E-12	2.40E-04	%M5O_RPVLEAK	RPV LEAK - MODE 5 OPEN
		1.21E-02	C12-BV_-RE-F018B	MISPOSITION OF VALVE FO18B
		3.00E-04	E50-SQV-CC-EQU_ALL	CCF of all components in group 'E50-SQV-CC-EQU'
		5.00E-01	LEAK-ISO	RWCU LEAK ISOLATED
		1.61E-02	XXX-XHE-FO-LPMAKEUP	OP. FAILS TO RECOG. NEED FOR LOW PRESS. MAKEUP AFTER DEPRESSURIZATION
115	7.01E-12	2.40E-04	%M5O_RPVLEAK	RPV LEAK - MODE 5 OPEN
		1.21E-02	C12-BV_-RE-F021A	MISPOSITION OF VALVE F021A
		3.00E-04	E50-SQV-CC-EQU_ALL	CCF of all components in group 'E50-SQV-CC-EQU'
		5.00E-01	LEAK-ISO	RWCU LEAK ISOLATED
		1.61E-02	XXX-XHE-FO-LPMAKEUP	OP. FAILS TO RECOG. NEED FOR LOW PRESS. MAKEUP AFTER DEPRESSURIZATION

Table 16.6-3

Internal Events Shutdown PRA Cutset Report

Cutsets with Descriptions Report Internal Events Shutdown Core Damage Frequency = 1.70E-08 /year Top 200 Cutsets				
#	**Cutset Prob**	**Event Prob**	**Event**	**Description**
116	7.01E-12	2.40E-04	%M5O_RPVLEAK	RPV LEAK - MODE 5 OPEN
		1.21E-02	C12-BV_-RE-F021B	MISPOSITION OF VALVE F021B
		3.00E-04	E50-SQV-CC-EQU_ALL	CCF of all components in group 'E50-SQV-CC-EQU'
		5.00E-01	LEAK-ISO	RWCU LEAK ISOLATED
		1.61E-02	XXX-XHE-FO-LPMAKEUP	OP. FAILS TO RECOG. NEED FOR LOW PRESS. MAKEUP AFTER DEPRESSURIZATION
117	6.92E-12	3.02E-03	%M5_G31	LOSS OF RWCU - MODE 5
		2.00E-03	C12-ACV-OO-F012	AIR OPERATED VALVE F012 FAILS TO CLOSE
		1.00E-04	C63-CCFSOFTWARE	Common cause failure of software
		5.00E-02	MS-TOP2	TWO SRVs FAIL TO OPEN (MANUAL)
		2.29E-01	R-M5-G31	RWCU/SDC RECOVERY
118	6.92E-12	3.02E-03	%M5_G31	LOSS OF RWCU - MODE 5
		2.00E-03	C12-ACV-OO-F030	AIR OPERATED VALVE F030 FAILS TO CLOSE
		1.00E-04	C63-CCFSOFTWARE	Common cause failure of software
		5.00E-02	MS-TOP2	TWO SRVs FAIL TO OPEN (MANUAL)
		2.29E-01	R-M5-G31	RWCU/SDC RECOVERY
119	6.67E-12	3.00E-04	%M6U_RPVLEAK	RPV LEAK - MODE 6 UNFLOODED
		1.00E-04	C63-CCFSOFTWARE	Common cause failure of software
		4.44E-04	G21-MOV-CC-2_1_2	CCF of two components: G21-MOV-CC-F332A & G21-MOV-CC-F332B
		5.00E-01	LEAK-ISO	RWCU LEAK ISOLATED
120	6.43E-12	3.02E-03	%M5_G31	LOSS OF RWCU - MODE 5
		3.21E-02	C12-XHE-FO-LEVEL2	Operator fails to back-up CRD actuation
		1.80E-05	C63-LOG-FC-ESFLG_ALL	CCF of all components in group 'C63-LOG-FC-ESFLG'
		2.29E-01	R-M5-G31	RWCU/SDC RECOVERY
		1.61E-02	XXX-XHE-FO-LPMAKEUP	OP. FAILS TO RECOG. NEED FOR LOW PRESS. MAKEUP AFTER DEPRESSURIZATION

Table 16.6-3

Internal Events Shutdown PRA Cutset Report

Cutsets with Descriptions Report Internal Events Shutdown Core Damage Frequency = 1.70E-08 /year Top 200 Cutsets				
#	**Cutset Prob**	**Event Prob**	**Event**	**Description**
121	6.39E-12	3.02E-03	%M5_G31	LOSS OF RWCU - MODE 5
		1.50E-04	B21-SQV-CC_ALL	CCF of all components in group 'B21-SQV-CC'
		3.84E-02	B32-TM-LOOPA-IND	ICS LOOP A IN TEST OR MAINTENANCE BY ITSELF
		3.21E-02	C12-XHE-FO-LEVEL2	Operator fails to back-up CRD actuation
		5.00E-02	MS-TOP2	TWO SRVs FAIL TO OPEN (MANUAL)
		2.29E-01	R-M5-G31	RWCU/SDC RECOVERY
122	6.39E-12	3.02E-03	%M5_G31	LOSS OF RWCU - MODE 5
		1.50E-04	B21-SQV-CC_ALL	CCF of all components in group 'B21-SQV-CC'
		3.84E-02	B32-TM-LOOPB-IND	ICS LOOP B IN TEST OR MAINTENANCE BY ITSELF
		3.21E-02	C12-XHE-FO-LEVEL2	Operator fails to back-up CRD actuation
		5.00E-02	MS-TOP2	TWO SRVs FAIL TO OPEN (MANUAL)
		2.29E-01	R-M5-G31	RWCU/SDC RECOVERY
123	6.23E-12	2.11E-03	%M5_LOPP	LOSS OF PREF-POWR MODE 5
		1.00E-04	C63-CCFSOFTWARE	Common cause failure of software
		5.00E-02	MS-TOP2	TWO SRVs FAIL TO OPEN (MANUAL)
		4.41E-03	R21-DG_-FR-CCF_1_2	CCF of two components: R21-DG_-FR-DGA & R21-DG_-FR-DGB
		1.34E-01	R-M5-LOPP	RECOVERY OF OFFSITE POWER IN MODE 5
124	6.20E-12	2.40E-04	%M5O_RPVLEAK	RPV LEAK - MODE 5 OPEN
		3.21E-02	C12-XHE-FO-LEVEL2	Operator fails to back-up CRD actuation
		1.00E-04	C63-CCFSOFTWARE	Common cause failure of software
		5.00E-01	LEAK-ISO	RWCU LEAK ISOLATED
		1.61E-02	XXX-XHE-FO-LPMAKEUP	OP. FAILS TO RECOG. NEED FOR LOW PRESS. MAKEUP AFTER DEPRESSURIZATION
125	6.14E-12	2.40E-04	%M5O_RPVLEAK	RPV LEAK - MODE 5 OPEN

Table 16.6-3

Internal Events Shutdown PRA Cutset Report

Cutsets with Descriptions Report Internal Events Shutdown Core Damage Frequency = 1.70E-08 /year Top 200 Cutsets				
#	**Cutset Prob**	**Event Prob**	**Event**	**Description**
		1.21E-02	C12-BV_-RE-F003B	MISPOSITION OF VALVE F003B
		2.63E-04	E50-BV_-OC-F004A	MAINTENANCE VALVE F004A PLUGS/TRANSFERS CLOSED
		5.00E-01	LEAK-ISO	RWCU LEAK ISOLATED
		1.61E-02	XXX-XHE-FO-LPMAKEUP	OP. FAILS TO RECOG. NEED FOR LOW PRESS. MAKEUP AFTER DEPRESSURIZATION
126	6.14E-12	2.40E-04	%M5O_RPVLEAK	RPV LEAK - MODE 5 OPEN
		1.21E-02	C12-BV_-RE-F003B	MISPOSITION OF VALVE F003B
		2.63E-04	E50-BV_-OC-F004D	MAINTENANCE VALVE F004D PLUGS/TRANSFERS CLOSED
		5.00E-01	LEAK-ISO	RWCU LEAK ISOLATED
		1.61E-02	XXX-XHE-FO-LPMAKEUP	OP. FAILS TO RECOG. NEED FOR LOW PRESS. MAKEUP AFTER DEPRESSURIZATION
127	6.14E-12	2.40E-04	%M5O_RPVLEAK	RPV LEAK - MODE 5 OPEN
		1.21E-02	C12-BV_-RE-F018A	MISPOSITION OF VALVE F018A
		2.63E-04	E50-BV_-OC-F004A	MAINTENANCE VALVE F004A PLUGS/TRANSFERS CLOSED
		5.00E-01	LEAK-ISO	RWCU LEAK ISOLATED
		1.61E-02	XXX-XHE-FO-LPMAKEUP	OP. FAILS TO RECOG. NEED FOR LOW PRESS. MAKEUP AFTER DEPRESSURIZATION
128	6.14E-12	2.40E-04	%M5O_RPVLEAK	RPV LEAK - MODE 5 OPEN
		1.21E-02	C12-BV_-RE-F018A	MISPOSITION OF VALVE F018A
		2.63E-04	E50-BV_-OC-F004D	MAINTENANCE VALVE F004D PLUGS/TRANSFERS CLOSED
		5.00E-01	LEAK-ISO	RWCU LEAK ISOLATED
		1.61E-02	XXX-XHE-FO-LPMAKEUP	OP. FAILS TO RECOG. NEED FOR LOW PRESS. MAKEUP AFTER DEPRESSURIZATION

Table 16.6-3

Internal Events Shutdown PRA Cutset Report

Cutsets with Descriptions Report Internal Events Shutdown Core Damage Frequency = 1.70E-08 /year Top 200 Cutsets				
#	**Cutset Prob**	**Event Prob**	**Event**	**Description**
129	6.14E-12	2.40E-04	%M5O_RPVLEAK	RPV LEAK - MODE 5 OPEN
		1.21E-02	C12-BV_-RE-F018B	MISPOSITION OF VALVE FO18B
		2.63E-04	E50-BV_-OC-F004A	MAINTENANCE VALVE F004A PLUGS/TRANSFERS CLOSED
		5.00E-01	LEAK-ISO	RWCU LEAK ISOLATED
		1.61E-02	XXX-XHE-FO-LPMAKEUP	OP. FAILS TO RECOG. NEED FOR LOW PRESS. MAKEUP AFTER DEPRESSURIZATION
130	6.14E-12	2.40E-04	%M5O_RPVLEAK	RPV LEAK - MODE 5 OPEN
		1.21E-02	C12-BV_-RE-F018B	MISPOSITION OF VALVE FO18B
		2.63E-04	E50-BV_-OC-F004D	MAINTENANCE VALVE F004D PLUGS/TRANSFERS CLOSED
		5.00E-01	LEAK-ISO	RWCU LEAK ISOLATED
		1.61E-02	XXX-XHE-FO-LPMAKEUP	OP. FAILS TO RECOG. NEED FOR LOW PRESS. MAKEUP AFTER DEPRESSURIZATION
131	6.14E-12	2.40E-04	%M5O_RPVLEAK	RPV LEAK - MODE 5 OPEN
		1.21E-02	C12-BV_-RE-F021A	MISPOSITION OF VALVE F021A
		2.63E-04	E50-BV_-OC-F004A	MAINTENANCE VALVE F004A PLUGS/TRANSFERS CLOSED
		5.00E-01	LEAK-ISO	RWCU LEAK ISOLATED
		1.61E-02	XXX-XHE-FO-LPMAKEUP	OP. FAILS TO RECOG. NEED FOR LOW PRESS. MAKEUP AFTER DEPRESSURIZATION
132	6.14E-12	2.40E-04	%M5O_RPVLEAK	RPV LEAK - MODE 5 OPEN
		1.21E-02	C12-BV_-RE-F021A	MISPOSITION OF VALVE F021A
		2.63E-04	E50-BV_-OC-F004D	MAINTENANCE VALVE F004D PLUGS/TRANSFERS CLOSED
		5.00E-01	LEAK-ISO	RWCU LEAK ISOLATED
		1.61E-02	XXX-XHE-FO-LPMAKEUP	OP. FAILS TO RECOG. NEED FOR LOW PRESS. MAKEUP AFTER DEPRESSURIZATION

Table 16.6-3

Internal Events Shutdown PRA Cutset Report

Cutsets with Descriptions Report Internal Events Shutdown Core Damage Frequency = 1.70E-08 /year Top 200 Cutsets				
#	**Cutset Prob**	**Event Prob**	**Event**	**Description**
133	6.14E-12	2.40E-04	%M5O_RPVLEAK	RPV LEAK - MODE 5 OPEN
		1.21E-02	C12-BV_-RE-F021B	MISPOSITION OF VALVE F021B
		2.63E-04	E50-BV_-OC-F004A	MAINTENANCE VALVE F004A PLUGS/TRANSFERS CLOSED
		5.00E-01	LEAK-ISO	RWCU LEAK ISOLATED
		1.61E-02	XXX-XHE-FO-LPMAKEUP	OP. FAILS TO RECOG. NEED FOR LOW PRESS. MAKEUP AFTER DEPRESSURIZATION
134	6.14E-12	2.40E-04	%M5O_RPVLEAK	RPV LEAK - MODE 5 OPEN
		1.21E-02	C12-BV_-RE-F021B	MISPOSITION OF VALVE F021B
		2.63E-04	E50-BV_-OC-F004D	MAINTENANCE VALVE F004D PLUGS/TRANSFERS CLOSED
		5.00E-01	LEAK-ISO	RWCU LEAK ISOLATED
		1.61E-02	XXX-XHE-FO-LPMAKEUP	OP. FAILS TO RECOG. NEED FOR LOW PRESS. MAKEUP AFTER DEPRESSURIZATION
135	5.78E-12	2.40E-04	%M5O_RPVLEAK	RPV LEAK - MODE 5 OPEN
		3.21E-02	C12-XHE-FO-LEVEL2	Operator fails to back-up CRD actuation
		3.00E-05	C63-DTM-FC-ESFLG_ALL	CCF of all components in group 'C63-DTM-FC-ESFLG'
		5.00E-01	LEAK-ISO	RWCU LEAK ISOLATED
		5.00E-02	MS-TOP2	TWO SRVs FAIL TO OPEN (MANUAL)
136	5.62E-12	9.60E-04	%M5_RPVLEAK	RPV LEAK - MODE 5
		4.84E-02	C12-BV_-RE-F013A	MISPOSITION OF VALVE F013A
		4.84E-02	C12-BV_-RE-F013B	MISPOSITION OF VALVE F013B
		1.00E-04	C63-CCFSOFTWARE	Common cause failure of software
		5.00E-01	LEAK-ISO	RWCU LEAK ISOLATED
		5.00E-02	MS-TOP2	TWO SRVs FAIL TO OPEN (MANUAL)

Table 16.6-3

Internal Events Shutdown PRA Cutset Report

Cutsets with Descriptions Report Internal Events Shutdown Core Damage Frequency = 1.70E-08 /year Top 200 Cutsets				
#	**Cutset Prob**	**Event Prob**	**Event**	**Description**
137	5.62E-12	9.60E-04	%M5_RPVLEAK	RPV LEAK - MODE 5
		4.84E-02	C12-BV_-RE-F013A	MISPOSITION OF VALVE F013A
		4.84E-02	C12-BV_-RE-F015B	MISPOSITION OF VALVE F015B
		1.00E-04	C63-CCFSOFTWARE	Common cause failure of software
		5.00E-01	LEAK-ISO	RWCU LEAK ISOLATED
		5.00E-02	MS-TOP2	TWO SRVs FAIL TO OPEN (MANUAL)
138	5.62E-12	9.60E-04	%M5_RPVLEAK	RPV LEAK - MODE 5
		4.84E-02	C12-BV_-RE-F013B	MISPOSITION OF VALVE F013B
		4.84E-02	C12-BV_-RE-F015A	MISPOSITION OF VALVE F015A
		1.00E-04	C63-CCFSOFTWARE	Common cause failure of software
		5.00E-01	LEAK-ISO	RWCU LEAK ISOLATED
		5.00E-02	MS-TOP2	TWO SRVs FAIL TO OPEN (MANUAL)
139	5.62E-12	9.60E-04	%M5_RPVLEAK	RPV LEAK - MODE 5
		4.84E-02	C12-BV_-RE-F015A	MISPOSITION OF VALVE F015A
		4.84E-02	C12-BV_-RE-F015B	MISPOSITION OF VALVE F015B
		1.00E-04	C63-CCFSOFTWARE	Common cause failure of software
		5.00E-01	LEAK-ISO	RWCU LEAK ISOLATED
		5.00E-02	MS-TOP2	TWO SRVs FAIL TO OPEN (MANUAL)
140	5.60E-12	1.16E-06	%M6U_RWCU_BOC	LOCA - RWCU OUTSIDE CONTAINMENT - MODE 6 UNFLOODED
		3.00E-04	E50-SQV-CC-EQU_ALL	CCF of all components in group 'E50-SQV-CC-EQU'
		1.61E-02	XXX-XHE-FO-LPMAKEUP	OP. FAILS TO RECOG. NEED FOR LOW PRESS. MAKEUP AFTER DEPRESSURIZATION
141	5.23E-12	9.60E-04	%M5_RPVLEAK	RPV LEAK - MODE 5

Table 16.6-3

Internal Events Shutdown PRA Cutset Report

Cutsets with Descriptions Report Internal Events Shutdown Core Damage Frequency = 1.70E-08 /year Top 200 Cutsets				
#	**Cutset Prob**	**Event Prob**	**Event**	**Description**
		1.21E-02	C12-BV_-RE-F003B	MISPOSITION OF VALVE F003B
		1.80E-05	C63-LOG-FC-ESFLG_ALL	CCF of all components in group 'C63-LOG-FC-ESFLG'
		5.00E-01	LEAK-ISO	RWCU LEAK ISOLATED
		5.00E-02	MS-TOP2	TWO SRVs FAIL TO OPEN (MANUAL)
142	5.23E-12	9.60E-04	%M5_RPVLEAK	RPV LEAK - MODE 5
		1.21E-02	C12-BV_-RE-F018A	MISPOSITION OF VALVE F018A
		1.80E-05	C63-LOG-FC-ESFLG_ALL	CCF of all components in group 'C63-LOG-FC-ESFLG'
		5.00E-01	LEAK-ISO	RWCU LEAK ISOLATED
		5.00E-02	MS-TOP2	TWO SRVs FAIL TO OPEN (MANUAL)
143	5.23E-12	9.60E-04	%M5_RPVLEAK	RPV LEAK - MODE 5
		1.21E-02	C12-BV_-RE-F018B	MISPOSITION OF VALVE FO18B
		1.80E-05	C63-LOG-FC-ESFLG_ALL	CCF of all components in group 'C63-LOG-FC-ESFLG'
		5.00E-01	LEAK-ISO	RWCU LEAK ISOLATED
		5.00E-02	MS-TOP2	TWO SRVs FAIL TO OPEN (MANUAL)
144	5.23E-12	9.60E-04	%M5_RPVLEAK	RPV LEAK - MODE 5
		1.21E-02	C12-BV_-RE-F021A	MISPOSITION OF VALVE F021A
		1.80E-05	C63-LOG-FC-ESFLG_ALL	CCF of all components in group 'C63-LOG-FC-ESFLG'
		5.00E-01	LEAK-ISO	RWCU LEAK ISOLATED
		5.00E-02	MS-TOP2	TWO SRVs FAIL TO OPEN (MANUAL)
145	5.23E-12	9.60E-04	%M5_RPVLEAK	RPV LEAK - MODE 5
		1.21E-02	C12-BV_-RE-F021B	MISPOSITION OF VALVE F021B
		1.80E-05	C63-LOG-FC-ESFLG_ALL	CCF of all components in group 'C63-LOG-FC-ESFLG'
		5.00E-01	LEAK-ISO	RWCU LEAK ISOLATED
		5.00E-02	MS-TOP2	TWO SRVs FAIL TO OPEN (MANUAL)

Table 16.6-3

Internal Events Shutdown PRA Cutset Report

Cutsets with Descriptions Report Internal Events Shutdown Core Damage Frequency = 1.70E-08 /year Top 200 Cutsets				
#	**Cutset Prob**	**Event Prob**	**Event**	**Description**
146	5.19E-12	7.56E-04	%M5O_G31	LOSS OF RWCU MODE 5 OPEN
		1.50E-04	B21-SQV-CC_ALL	CCF of all components in group 'B21-SQV-CC'
		4.00E-03	C12-MOV-CC-F023	MOTOR OPERATED VALVE F023 FAILS TO OPEN
		5.00E-02	MS-TOP2	TWO SRVs FAIL TO OPEN (MANUAL)
		2.29E-01	R-M5-G31	RWCU/SDC RECOVERY
147	5.19E-12	7.56E-04	%M5O_G31	LOSS OF RWCU MODE 5 OPEN
		1.50E-04	B21-SQV-CC_ALL	CCF of all components in group 'B21-SQV-CC'
		4.00E-03	C12-MOV-OO-F024	MOTOR OPERATED VALVE F024 FAILS TO CLOSE
		5.00E-02	MS-TOP2	TWO SRVs FAIL TO OPEN (MANUAL)
		2.29E-01	R-M5-G31	RWCU/SDC RECOVERY
148	5.19E-12	7.56E-04	%M5O_G31	LOSS OF RWCU MODE 5 OPEN
		1.50E-04	B21-SQV-CC_ALL	CCF of all components in group 'B21-SQV-CC'
		4.00E-03	C12-MOV-OO-F062A	MOTOR OPERATED VALVE F062A FAILS TO CLOSE
		5.00E-02	MS-TOP2	TWO SRVs FAIL TO OPEN (MANUAL)
		2.29E-01	R-M5-G31	RWCU/SDC RECOVERY
149	5.19E-12	7.56E-04	%M5O_G31	LOSS OF RWCU MODE 5 OPEN
		1.50E-04	B21-SQV-CC_ALL	CCF of all components in group 'B21-SQV-CC'
		4.00E-03	C12-MOV-OO-F062B	MOTOR OPERATED VALVE F062B FAILS TO CLOSE
		5.00E-02	MS-TOP2	TWO SRVs FAIL TO OPEN (MANUAL)
		2.29E-01	R-M5-G31	RWCU/SDC RECOVERY
150	5.00E-12	7.56E-04	%M5O_G31	LOSS OF RWCU MODE 5 OPEN
		3.21E-02	C12-XHE-FO-LEVEL2	Operator fails to back-up CRD actuation
		1.80E-05	C63-LOG-FC-ESFLG_ALL	CCF of all components in group 'C63-LOG-FC-ESFLG'
		5.00E-02	MS-TOP2	TWO SRVs FAIL TO OPEN (MANUAL)
		2.29E-01	R-M5-G31	RWCU/SDC RECOVERY

Table 16.6-3

Internal Events Shutdown PRA Cutset Report

Cutsets with Descriptions Report Internal Events Shutdown Core Damage Frequency = 1.70E-08 /year Top 200 Cutsets				
#	**Cutset Prob**	**Event Prob**	**Event**	**Description**
151	4.91E-12	1.16E-06	%M6U_RWCU_BOC	LOCA - RWCU OUTSIDE CONTAINMENT - MODE 6 UNFLOODED
		2.63E-04	E50-BV_-OC-F004A	MAINTENANCE VALVE F004A PLUGS/TRANSFERS CLOSED
		1.61E-02	XXX-XHE-FO-LPMAKEUP	OP. FAILS TO RECOG. NEED FOR LOW PRESS. MAKEUP AFTER DEPRESSURIZATION
152	4.91E-12	1.16E-06	%M6U_RWCU_BOC	LOCA - RWCU OUTSIDE CONTAINMENT - MODE 6 UNFLOODED
		2.63E-04	E50-BV_-OC-F004D	MAINTENANCE VALVE F004D PLUGS/TRANSFERS CLOSED
		1.61E-02	XXX-XHE-FO-LPMAKEUP	OP. FAILS TO RECOG. NEED FOR LOW PRESS. MAKEUP AFTER DEPRESSURIZATION
153	4.80E-12	9.60E-04	%M5_RPVLEAK	RPV LEAK - MODE 5
		2.00E-03	C12-ACV-OO-F012	AIR OPERATED VALVE F012 FAILS TO CLOSE
		1.00E-04	C63-CCFSOFTWARE	Common cause failure of software
		5.00E-01	LEAK-ISO	RWCU LEAK ISOLATED
		5.00E-02	MS-TOP2	TWO SRVs FAIL TO OPEN (MANUAL)
154	4.80E-12	9.60E-04	%M5_RPVLEAK	RPV LEAK - MODE 5
		2.00E-03	C12-ACV-OO-F030	AIR OPERATED VALVE F030 FAILS TO CLOSE
		1.00E-04	C63-CCFSOFTWARE	Common cause failure of software
		5.00E-01	LEAK-ISO	RWCU LEAK ISOLATED
		5.00E-02	MS-TOP2	TWO SRVs FAIL TO OPEN (MANUAL)
155	4.80E-12	9.60E-04	%M5_RPVLEAK	RPV LEAK - MODE 5
		2.00E-03	C12-MP_-FS-C001B	MOTOR-DRIVEN PUMP C001B FAILS TO START
		1.00E-04	C63-CCFSOFTWARE	Common cause failure of software
		5.00E-01	LEAK-ISO	RWCU LEAK ISOLATED
		5.00E-02	MS-TOP2	TWO SRVs FAIL TO OPEN (MANUAL)

Table 16.6-3

Internal Events Shutdown PRA Cutset Report

Cutsets with Descriptions Report Internal Events Shutdown Core Damage Frequency = 1.70E-08 /year Top 200 Cutsets				
#	**Cutset Prob**	**Event Prob**	**Event**	**Description**
156	4.80E-12	9.60E-04	%M5_RPVLEAK	RPV LEAK - MODE 5
		2.00E-03	C12-MP_-FS-C001BOIL	MOTOR-DRIVEN AUX. OIL PUMP FOR C001B FAILS TO START
		1.00E-04	C63-CCFSOFTWARE	Common cause failure of software
		5.00E-01	LEAK-ISO	RWCU LEAK ISOLATED
		5.00E-02	MS-TOP2	TWO SRVs FAIL TO OPEN (MANUAL)
157	4.57E-12	2.66E-06	%M5O_LPSWS	LOSS OF PLANT SERVICE WATER MODE 5 OPEN
		1.50E-04	B21-SQV-CC_ALL	CCF of all components in group 'B21-SQV-CC'
		5.00E-02	MS-TOP2	TWO SRVs FAIL TO OPEN (MANUAL)
		2.29E-01	R-M5-PSWS	SERVICE WATER RECOVERY
158	4.50E-12	3.00E-04	%M6U_RPVLEAK	RPV LEAK - MODE 6 UNFLOODED
		1.00E-04	B21-UV_-CC-F102A	CHECK VALVE F102A FAILS TO OPEN
		3.00E-04	E50-SQV-CC-EQU_ALL	CCF of all components in group 'E50-SQV-CC-EQU'
		5.00E-01	LEAK-ISO	RWCU LEAK ISOLATED
159	4.50E-12	3.00E-04	%M6U_RPVLEAK	RPV LEAK - MODE 6 UNFLOODED
		1.00E-04	B21-UV_-CC-F111A	CHECK VALVE F111A FAILS TO OPEN
		3.00E-04	E50-SQV-CC-EQU_ALL	CCF of all components in group 'E50-SQV-CC-EQU'
		5.00E-01	LEAK-ISO	RWCU LEAK ISOLATED
160	4.49E-12	3.00E-04	%M6U_RPVLEAK	RPV LEAK - MODE 6 UNFLOODED
		1.86E-06	C63-LDD-FC-ESFLOADS	CCF OF ALL ESF LOAD DRIVERS
		5.00E-01	LEAK-ISO	RWCU LEAK ISOLATED
		1.61E-02	XXX-XHE-FO-LPMAKEUP	OP. FAILS TO RECOG. NEED FOR LOW PRESS. MAKEUP AFTER DEPRESSURIZATION

Table 16.6-3

Internal Events Shutdown PRA Cutset Report

Cutsets with Descriptions Report Internal Events Shutdown Core Damage Frequency = 1.70E-08 /year Top 200 Cutsets				
#	**Cutset Prob**	**Event Prob**	**Event**	**Description**
161	4.47E-12	9.60E-04	%M5_RPVLEAK	RPV LEAK - MODE 5
		3.21E-02	C12-XHE-FO-LEVEL2	Operator fails to back-up CRD actuation
		1.80E-05	C63-LOG-FC-ESFLG_ALL	CCF of all components in group 'C63-LOG-FC-ESFLG'
		5.00E-01	LEAK-ISO	RWCU LEAK ISOLATED
		1.61E-02	XXX-XHE-FO-LPMAKEUP	OP. FAILS TO RECOG. NEED FOR LOW PRESS. MAKEUP AFTER DEPRESSURIZATION
162	4.45E-12	3.02E-03	%M5_G31	LOSS OF RWCU - MODE 5
		4.00E-03	C12-MOV-CC-F023	MOTOR OPERATED VALVE F023 FAILS TO OPEN
		1.00E-04	C63-CCFSOFTWARE	Common cause failure of software
		2.29E-01	R-M5-G31	RWCU/SDC RECOVERY
		1.61E-02	XXX-XHE-FO-LPMAKEUP	OP. FAILS TO RECOG. NEED FOR LOW PRESS. MAKEUP AFTER DEPRESSURIZATION
163	4.45E-12	3.02E-03	%M5_G31	LOSS OF RWCU - MODE 5
		4.00E-03	C12-MOV-OO-F024	MOTOR OPERATED VALVE F024 FAILS TO CLOSE
		1.00E-04	C63-CCFSOFTWARE	Common cause failure of software
		2.29E-01	R-M5-G31	RWCU/SDC RECOVERY
		1.61E-02	XXX-XHE-FO-LPMAKEUP	OP. FAILS TO RECOG. NEED FOR LOW PRESS. MAKEUP AFTER DEPRESSURIZATION
164	4.45E-12	3.02E-03	%M5_G31	LOSS OF RWCU - MODE 5
		4.00E-03	C12-MOV-OO-F062A	MOTOR OPERATED VALVE F062A FAILS TO CLOSE
		1.00E-04	C63-CCFSOFTWARE	Common cause failure of software
		2.29E-01	R-M5-G31	RWCU/SDC RECOVERY
		1.61E-02	XXX-XHE-FO-LPMAKEUP	OP. FAILS TO RECOG. NEED FOR LOW PRESS. MAKEUP AFTER DEPRESSURIZATION

Table 16.6-3

Internal Events Shutdown PRA Cutset Report

Cutsets with Descriptions Report Internal Events Shutdown Core Damage Frequency = 1.70E-08 /year Top 200 Cutsets				
#	**Cutset Prob**	**Event Prob**	**Event**	**Description**
165	4.45E-12	3.02E-03	%M5_G31	LOSS OF RWCU - MODE 5
		4.00E-03	C12-MOV-OO-F062B	MOTOR OPERATED VALVE F062B FAILS TO CLOSE
		1.00E-04	C63-CCFSOFTWARE	Common cause failure of software
		2.29E-01	R-M5-G31	RWCU/SDC RECOVERY
		1.61E-02	XXX-XHE-FO-LPMAKEUP	OP. FAILS TO RECOG. NEED FOR LOW PRESS. MAKEUP AFTER DEPRESSURIZATION
166	4.44E-12	9.60E-04	%M5_RPVLEAK	RPV LEAK - MODE 5
		1.50E-04	B21-SQV-CC_ALL	CCF of all components in group 'B21-SQV-CC'
		3.84E-02	B32-TM-LOOPA-IND	ICS LOOP A IN TEST OR MAINTENANCE BY ITSELF
		3.21E-02	C12-XHE-FO-LEVEL2	Operator fails to back-up CRD actuation
		5.00E-01	LEAK-ISO	RWCU LEAK ISOLATED
		5.00E-02	MS-TOP2	TWO SRVs FAIL TO OPEN (MANUAL)
167	4.44E-12	9.60E-04	%M5_RPVLEAK	RPV LEAK - MODE 5
		1.50E-04	B21-SQV-CC_ALL	CCF of all components in group 'B21-SQV-CC'
		3.84E-02	B32-TM-LOOPB-IND	ICS LOOP B IN TEST OR MAINTENANCE BY ITSELF
		3.21E-02	C12-XHE-FO-LEVEL2	Operator fails to back-up CRD actuation
		5.00E-01	LEAK-ISO	RWCU LEAK ISOLATED
		5.00E-02	MS-TOP2	TWO SRVs FAIL TO OPEN (MANUAL)
168	4.43E-12	2.11E-03	%M5_LOPP	LOSS OF PREF-POWR MODE 5
		1.00E-04	C63-CCFSOFTWARE	Common cause failure of software
		5.00E-02	MS-TOP2	TWO SRVs FAIL TO OPEN (MANUAL)
		5.60E-02	R21-DG_-FR-DGA	DIESEL GENERATOR "A" FAILS TO RUN GIVEN START
		5.60E-02	R21-DG_-FR-DGB	DIESEL GENERATOR "B" FAILS TO RUN GIVEN START
		1.34E-01	R-M5-LOPP	RECOVERY OF OFFSITE POWER IN MODE 5

Table 16.6-3

Internal Events Shutdown PRA Cutset Report

Cutsets with Descriptions Report Internal Events Shutdown Core Damage Frequency = 1.70E-08 /year Top 200 Cutsets				
#	**Cutset Prob**	**Event Prob**	**Event**	**Description**
169	4.25E-12	1.20E-03	%M6F_RPVLEAK	RPV LEAK - MODE 6 FLOODED
		1.00E-04	C63-CCFSOFTWARE	Common cause failure of software
		4.00E-03	G31-MOV-OO-F044A	MOTOR OPERATED VALVE F044A FAILS TO CLOSE
		1.77E-02	G31-XHE-FO-MIBOC	OPERATOR FAILS TO ISOLATE RWCU BREAK OUTSIDE CONTAINMENT
		5.00E-01	LEAK-ISO	RWCU LEAK ISOLATED
170	4.15E-12	3.02E-03	%M5_G31	LOSS OF RWCU - MODE 5
		4.00E-03	C12-MOV-CC-F023	MOTOR OPERATED VALVE F023 FAILS TO OPEN
		3.00E-05	C63-DTM-FC-ESFLG_ALL	CCF of all components in group 'C63-DTM-FC-ESFLG'
		5.00E-02	MS-TOP2	TWO SRVs FAIL TO OPEN (MANUAL)
		2.29E-01	R-M5-G31	RWCU/SDC RECOVERY
171	4.15E-12	3.02E-03	%M5_G31	LOSS OF RWCU - MODE 5
		4.00E-03	C12-MOV-OO-F024	MOTOR OPERATED VALVE F024 FAILS TO CLOSE
		3.00E-05	C63-DTM-FC-ESFLG_ALL	CCF of all components in group 'C63-DTM-FC-ESFLG'
		5.00E-02	MS-TOP2	TWO SRVs FAIL TO OPEN (MANUAL)
		2.29E-01	R-M5-G31	RWCU/SDC RECOVERY
172	4.15E-12	3.02E-03	%M5_G31	LOSS OF RWCU - MODE 5
		4.00E-03	C12-MOV-OO-F062A	MOTOR OPERATED VALVE F062A FAILS TO CLOSE
		3.00E-05	C63-DTM-FC-ESFLG_ALL	CCF of all components in group 'C63-DTM-FC-ESFLG'
		5.00E-02	MS-TOP2	TWO SRVs FAIL TO OPEN (MANUAL)
		2.29E-01	R-M5-G31	RWCU/SDC RECOVERY
173	4.15E-12	3.02E-03	%M5_G31	LOSS OF RWCU - MODE 5
		4.00E-03	C12-MOV-OO-F062B	MOTOR OPERATED VALVE F062B FAILS TO CLOSE
		3.00E-05	C63-DTM-FC-ESFLG_ALL	CCF of all components in group 'C63-DTM-FC-ESFLG'
		5.00E-02	MS-TOP2	TWO SRVs FAIL TO OPEN (MANUAL)
		2.29E-01	R-M5-G31	RWCU/SDC RECOVERY

Table 16.6-3

Internal Events Shutdown PRA Cutset Report

Cutsets with Descriptions Report Internal Events Shutdown Core Damage Frequency = 1.70E-08 /year Top 200 Cutsets				
#	**Cutset Prob**	**Event Prob**	**Event**	**Description**
174	4.15E-12	3.00E-04	%M6U_RPVLEAK	RPV LEAK - MODE 6 UNFLOODED
		1.72E-06	E50-UV_-CC-EQU_ALL	CCF of all components in group 'E50-UV_-CC-EQU'
		5.00E-01	LEAK-ISO	RWCU LEAK ISOLATED
		1.61E-02	XXX-XHE-FO-LPMAKEUP	OP. FAILS TO RECOG. NEED FOR LOW PRESS. MAKEUP AFTER DEPRESSURIZATION
175	4.12E-12	3.02E-03	%M5_G31	LOSS OF RWCU - MODE 5
		3.84E-02	B32-TM-LOOPA-IND	ICS LOOP A IN TEST OR MAINTENANCE BY ITSELF
		3.21E-02	C12-XHE-FO-LEVEL2	Operator fails to back-up CRD actuation
		3.00E-04	E50-SQV-CC-EQU_ALL	CCF of all components in group 'E50-SQV-CC-EQU'
		2.29E-01	R-M5-G31	RWCU/SDC RECOVERY
		1.61E-02	XXX-XHE-FO-LPMAKEUP	OP. FAILS TO RECOG. NEED FOR LOW PRESS. MAKEUP AFTER DEPRESSURIZATION
176	4.12E-12	3.02E-03	%M5_G31	LOSS OF RWCU - MODE 5
		3.84E-02	B32-TM-LOOPB-IND	ICS LOOP B IN TEST OR MAINTENANCE BY ITSELF
		3.21E-02	C12-XHE-FO-LEVEL2	Operator fails to back-up CRD actuation
		3.00E-04	E50-SQV-CC-EQU_ALL	CCF of all components in group 'E50-SQV-CC-EQU'
		2.29E-01	R-M5-G31	RWCU/SDC RECOVERY
		1.61E-02	XXX-XHE-FO-LPMAKEUP	OP. FAILS TO RECOG. NEED FOR LOW PRESS. MAKEUP AFTER DEPRESSURIZATION
177	4.00E-12	3.02E-03	%M5_G31	LOSS OF RWCU - MODE 5
		3.21E-02	C12-XHE-FO-LEVEL2	Operator fails to back-up CRD actuation
		3.60E-06	C63-LT_-NO-ESFRX_ALL	CCF of all components in group 'C63-LT_-NO-ESFRX'
		5.00E-02	MS-TOP2	TWO SRVs FAIL TO OPEN (MANUAL)
		2.29E-01	R-M5-G31	RWCU/SDC RECOVERY

Table 16.6-3

Internal Events Shutdown PRA Cutset Report

Cutsets with Descriptions Report Internal Events Shutdown Core Damage Frequency = 1.70E-08 /year Top 200 Cutsets				
#	**Cutset Prob**	**Event Prob**	**Event**	**Description**
178	3.98E-12	9.45E-04	%M6U_G31	LOSS OF RWCU - MODE 6 UNFLOODED
		4.00E-03	C12-MOV-CC-F023	MOTOR OPERATED VALVE F023 FAILS TO OPEN
		3.00E-04	E50-SQV-CC-EQU_ALL	CCF of all components in group 'E50-SQV-CC-EQU'
		2.18E-01	R-M6-G31	FAILURE TO RECOVER RWCU/SDC
		1.61E-02	XXX-XHE-FO-LPMAKEUP	OP. FAILS TO RECOG. NEED FOR LOW PRESS. MAKEUP AFTER DEPRESSURIZATION
179	3.98E-12	9.45E-04	%M6U_G31	LOSS OF RWCU - MODE 6 UNFLOODED
		4.00E-03	C12-MOV-OO-F024	MOTOR OPERATED VALVE F024 FAILS TO CLOSE
		3.00E-04	E50-SQV-CC-EQU_ALL	CCF of all components in group 'E50-SQV-CC-EQU'
		2.18E-01	R-M6-G31	FAILURE TO RECOVER RWCU/SDC
		1.61E-02	XXX-XHE-FO-LPMAKEUP	OP. FAILS TO RECOG. NEED FOR LOW PRESS. MAKEUP AFTER DEPRESSURIZATION
180	3.98E-12	9.45E-04	%M6U_G31	LOSS OF RWCU - MODE 6 UNFLOODED
		4.00E-03	C12-MOV-OO-F062A	MOTOR OPERATED VALVE F062A FAILS TO CLOSE
		3.00E-04	E50-SQV-CC-EQU_ALL	CCF of all components in group 'E50-SQV-CC-EQU'
		2.18E-01	R-M6-G31	FAILURE TO RECOVER RWCU/SDC
		1.61E-02	XXX-XHE-FO-LPMAKEUP	OP. FAILS TO RECOG. NEED FOR LOW PRESS. MAKEUP AFTER DEPRESSURIZATION
181	3.98E-12	9.45E-04	%M6U_G31	LOSS OF RWCU - MODE 6 UNFLOODED
		4.00E-03	C12-MOV-OO-F062B	MOTOR OPERATED VALVE F062B FAILS TO CLOSE
		3.00E-04	E50-SQV-CC-EQU_ALL	CCF of all components in group 'E50-SQV-CC-EQU'
		2.18E-01	R-M6-G31	FAILURE TO RECOVER RWCU/SDC
		1.61E-02	XXX-XHE-FO-LPMAKEUP	OP. FAILS TO RECOG. NEED FOR LOW PRESS. MAKEUP AFTER DEPRESSURIZATION

Table 16.6-3

Internal Events Shutdown PRA Cutset Report

Cutsets with Descriptions Report Internal Events Shutdown Core Damage Frequency = 1.70E-08 /year Top 200 Cutsets				
#	**Cutset Prob**	**Event Prob**	**Event**	**Description**
182	3.94E-12	3.00E-04	%M6U_RPVLEAK	RPV LEAK - MODE 6 UNFLOODED
		1.00E-04	B21-UV_-CC-F102A	CHECK VALVE F102A FAILS TO OPEN
		2.63E-04	E50-BV_-OC-F004A	MAINTENANCE VALVE F004A PLUGS/TRANSFERS CLOSED
		5.00E-01	LEAK-ISO	RWCU LEAK ISOLATED
183	3.94E-12	3.00E-04	%M6U_RPVLEAK	RPV LEAK - MODE 6 UNFLOODED
		1.00E-04	B21-UV_-CC-F102A	CHECK VALVE F102A FAILS TO OPEN
		2.63E-04	E50-BV_-OC-F004D	MAINTENANCE VALVE F004D PLUGS/TRANSFERS CLOSED
		5.00E-01	LEAK-ISO	RWCU LEAK ISOLATED
184	3.94E-12	3.00E-04	%M6U_RPVLEAK	RPV LEAK - MODE 6 UNFLOODED
		1.00E-04	B21-UV_-CC-F111A	CHECK VALVE F111A FAILS TO OPEN
		2.63E-04	E50-BV_-OC-F004A	MAINTENANCE VALVE F004A PLUGS/TRANSFERS CLOSED
		5.00E-01	LEAK-ISO	RWCU LEAK ISOLATED
185	3.94E-12	3.00E-04	%M6U_RPVLEAK	RPV LEAK - MODE 6 UNFLOODED
		1.00E-04	B21-UV_-CC-F111A	CHECK VALVE F111A FAILS TO OPEN
		2.63E-04	E50-BV_-OC-F004D	MAINTENANCE VALVE F004D PLUGS/TRANSFERS CLOSED
		5.00E-01	LEAK-ISO	RWCU LEAK ISOLATED
186	3.91E-12	1.06E-05	%M5_LPSWS	LOSS OF PLANT SERVICE WATER - MODE 5
		1.00E-04	C63-CCFSOFTWARE	Common cause failure of software
		2.29E-01	R-M5-PSWS	SERVICE WATER RECOVERY
		1.61E-02	XXX-XHE-FO-LPMAKEUP	OP. FAILS TO RECOG. NEED FOR LOW PRESS. MAKEUP AFTER DEPRESSURIZATION
187	3.64E-12	1.06E-05	%M5_LPSWS	LOSS OF PLANT SERVICE WATER - MODE 5
		3.00E-05	C63-DTM-FC-ESFLG_ALL	CCF of all components in group 'C63-DTM-FC-ESFLG'
		5.00E-02	MS-TOP2	TWO SRVs FAIL TO OPEN (MANUAL)
		2.29E-01	R-M5-PSWS	SERVICE WATER RECOVERY

Table 16.6-3

Internal Events Shutdown PRA Cutset Report

Cutsets with Descriptions Report Internal Events Shutdown Core Damage Frequency = 1.70E-08 /year Top 200 Cutsets				
#	**Cutset Prob**	**Event Prob**	**Event**	**Description**
188	3.64E-12	2.11E-03	%M5_LOPP	LOSS OF PREF-POWR MODE 5
		1.00E-04	C63-CCFSOFTWARE	Common cause failure of software
		5.00E-02	MS-TOP2	TWO SRVs FAIL TO OPEN (MANUAL)
		5.60E-02	R21-DG_-FR-DGA	DIESEL GENERATOR "A" FAILS TO RUN GIVEN START
		4.60E-02	R21-DG_-TM-DGB	STANDBY DIESEL GENERATOR "B" IN MAINTENANCE
		1.34E-01	R-M5-LOPP	RECOVERY OF OFFSITE POWER IN MODE 5
189	3.64E-12	2.11E-03	%M5_LOPP	LOSS OF PREF-POWR MODE 5
		1.00E-04	C63-CCFSOFTWARE	Common cause failure of software
		5.00E-02	MS-TOP2	TWO SRVs FAIL TO OPEN (MANUAL)
		5.60E-02	R21-DG_-FR-DGB	DIESEL GENERATOR "B" FAILS TO RUN GIVEN START
		4.60E-02	R21-DG_-TM-DGA	STANDBY DIESEL GENERATOR "A" IN MAINTENANCE
		1.34E-01	R-M5-LOPP	RECOVERY OF OFFSITE POWER IN MODE 5
190	3.61E-12	3.02E-03	%M5_G31	LOSS OF RWCU - MODE 5
		3.84E-02	B32-TM-LOOPA-IND	ICS LOOP A IN TEST OR MAINTENANCE BY ITSELF
		3.21E-02	C12-XHE-FO-LEVEL2	Operator fails to back-up CRD actuation
		2.63E-04	E50-BV_-OC-F004A	MAINTENANCE VALVE F004A PLUGS/TRANSFERS CLOSED
		2.29E-01	R-M5-G31	RWCU/SDC RECOVERY
		1.61E-02	XXX-XHE-FO-LPMAKEUP	OP. FAILS TO RECOG. NEED FOR LOW PRESS. MAKEUP AFTER DEPRESSURIZATION
191	3.61E-12	3.02E-03	%M5_G31	LOSS OF RWCU - MODE 5
		3.84E-02	B32-TM-LOOPA-IND	ICS LOOP A IN TEST OR MAINTENANCE BY ITSELF
		3.21E-02	C12-XHE-FO-LEVEL2	Operator fails to back-up CRD actuation
		2.63E-04	E50-BV_-OC-F004D	MAINTENANCE VALVE F004D PLUGS/TRANSFERS CLOSED
		2.29E-01	R-M5-G31	RWCU/SDC RECOVERY
		1.61E-02	XXX-XHE-FO-LPMAKEUP	OP. FAILS TO RECOG. NEED FOR LOW PRESS. MAKEUP AFTER DEPRESSURIZATION

Table 16.6-3

Internal Events Shutdown PRA Cutset Report

Cutsets with Descriptions Report Internal Events Shutdown Core Damage Frequency = 1.70E-08 /year Top 200 Cutsets				
#	**Cutset Prob**	**Event Prob**	**Event**	**Description**
192	3.61E-12	3.02E-03	%M5_G31	LOSS OF RWCU - MODE 5
		3.84E-02	B32-TM-LOOPB-IND	ICS LOOP B IN TEST OR MAINTENANCE BY ITSELF
		3.21E-02	C12-XHE-FO-LEVEL2	Operator fails to back-up CRD actuation
		2.63E-04	E50-BV_-OC-F004A	MAINTENANCE VALVE F004A PLUGS/TRANSFERS CLOSED
		2.29E-01	R-M5-G31	RWCU/SDC RECOVERY
		1.61E-02	XXX-XHE-FO-LPMAKEUP	OP. FAILS TO RECOG. NEED FOR LOW PRESS. MAKEUP AFTER DEPRESSURIZATION
193	3.61E-12	3.02E-03	%M5_G31	LOSS OF RWCU - MODE 5
		3.84E-02	B32-TM-LOOPB-IND	ICS LOOP B IN TEST OR MAINTENANCE BY ITSELF
		3.21E-02	C12-XHE-FO-LEVEL2	Operator fails to back-up CRD actuation
		2.63E-04	E50-BV_-OC-F004D	MAINTENANCE VALVE F004D PLUGS/TRANSFERS CLOSED
		2.29E-01	R-M5-G31	RWCU/SDC RECOVERY
		1.61E-02	XXX-XHE-FO-LPMAKEUP	OP. FAILS TO RECOG. NEED FOR LOW PRESS. MAKEUP AFTER DEPRESSURIZATION
194	3.60E-12	2.40E-04	%M5O_RPVLEAK	RPV LEAK - MODE 5 OPEN
		1.50E-04	B21-SQV-CC_ALL	CCF of all components in group 'B21-SQV-CC'
		4.00E-03	C12-MOV-CC-F020A	MOTOR OPER. VALVE F020A FAILS TO OPEN
		5.00E-01	LEAK-ISO	RWCU LEAK ISOLATED
		5.00E-02	MS-TOP2	TWO SRVs FAIL TO OPEN (MANUAL)
195	3.60E-12	2.40E-04	%M5O_RPVLEAK	RPV LEAK - MODE 5 OPEN
		1.50E-04	B21-SQV-CC_ALL	CCF of all components in group 'B21-SQV-CC'
		4.00E-03	C12-MOV-CC-F020B	MOTOR OPER. VALVE F020B FAILS TO OPEN
		5.00E-01	LEAK-ISO	RWCU LEAK ISOLATED
		5.00E-02	MS-TOP2	TWO SRVs FAIL TO OPEN (MANUAL)

Table 16.6-3

Internal Events Shutdown PRA Cutset Report

Cutsets with Descriptions Report Internal Events Shutdown Core Damage Frequency = 1.70E-08 /year Top 200 Cutsets				
#	**Cutset Prob**	**Event Prob**	**Event**	**Description**
196	3.60E-12	2.40E-04	%M5O_RPVLEAK	RPV LEAK - MODE 5 OPEN
		1.50E-04	B21-SQV-CC_ALL	CCF of all components in group 'B21-SQV-CC'
		4.00E-03	C12-MOV-CC-F023	MOTOR OPERATED VALVE F023 FAILS TO OPEN
		5.00E-01	LEAK-ISO	RWCU LEAK ISOLATED
		5.00E-02	MS-TOP2	TWO SRVs FAIL TO OPEN (MANUAL)
197	3.60E-12	2.40E-04	%M5O_RPVLEAK	RPV LEAK - MODE 5 OPEN
		1.50E-04	B21-SQV-CC_ALL	CCF of all components in group 'B21-SQV-CC'
		4.00E-03	C12-MOV-OO-F024	MOTOR OPERATED VALVE F024 FAILS TO CLOSE
		5.00E-01	LEAK-ISO	RWCU LEAK ISOLATED
		5.00E-02	MS-TOP2	TWO SRVs FAIL TO OPEN (MANUAL)
198	3.60E-12	2.40E-04	%M5O_RPVLEAK	RPV LEAK - MODE 5 OPEN
		1.50E-04	B21-SQV-CC_ALL	CCF of all components in group 'B21-SQV-CC'
		4.00E-03	C12-MOV-OO-F062A	MOTOR OPERATED VALVE F062A FAILS TO CLOSE
		5.00E-01	LEAK-ISO	RWCU LEAK ISOLATED
		5.00E-02	MS-TOP2	TWO SRVs FAIL TO OPEN (MANUAL)
199	3.60E-12	2.40E-04	%M5O_RPVLEAK	RPV LEAK - MODE 5 OPEN
		1.50E-04	B21-SQV-CC_ALL	CCF of all components in group 'B21-SQV-CC'
		4.00E-03	C12-MOV-OO-F062B	MOTOR OPERATED VALVE F062B FAILS TO CLOSE
		5.00E-01	LEAK-ISO	RWCU LEAK ISOLATED
		5.00E-02	MS-TOP2	TWO SRVs FAIL TO OPEN (MANUAL)
200	3.51E-12	2.40E-04	%M5O_RPVLEAK	RPV LEAK - MODE 5 OPEN
		1.50E-04	B21-SQV-CC_ALL	CCF of all components in group 'B21-SQV-CC'
		1.21E-02	C12-BV_-RE-F003B	MISPOSITION OF VALVE F003B
		5.00E-01	LEAK-ISO	RWCU LEAK ISOLATED

Table 16.6-3

Internal Events Shutdown PRA Cutset Report

Cutsets with Descriptions Report Internal Events Shutdown Core Damage Frequency = 1.70E-08 /year Top 200 Cutsets				
#	**Cutset Prob**	**Event Prob**	**Event**	**Description**
		1.61E-02	XXX-XHE-FO-LPMAKEUP	OP. FAILS TO RECOG. NEED FOR LOW PRESS. MAKEUP AFTER DEPRESSURIZATION

Table 16.6-4

Internal Events Shutdown PRA Importance Measure Report

F-V and RAW Importance Measures Report
(F-V = Fussell-Vesely Importance Measure; RAW = Risk Achievement Worth Importance Measure)
Internal Event Shutdown Full Power
Core Damage Frequency = 1.70E-08 /year

Event Name	Probability	Fus Ves	RAW	Description
DWH-2	1.00E-02	3.89E-01	3.95E+01	DRYWELL HATCH CLOSURE FAILURE
XXX-XHE-FO-LPMAKEUP	1.61E-02	3.13E-01	2.01E+01	OP. FAILS TO RECOG. NEED FOR LOW PRESS. MAKEUP AFTER DEPRESSURIZATION
LEAK-ISO	5.00E-01	3.02E-01	1.30E+00	RWCU LEAK ISOLATED
%M6U_RPVLEAK	3.00E-04	2.02E-01	6.76E+02	RPV LEAK - MODE 6 UNFLOODED
%M6F_LOCA_I	2.93E-07	1.73E-01	5.90E+05	LOCA - INSTRUMENT LINE BELOW TAF - MODE 6 FLOODED
%M5_LOCA_I	2.35E-07	1.39E-01	5.91E+05	LOCA - INSTRUMENT LINE BELOW TAF - MODE 5
MS-TOP2	5.00E-02	1.19E-01	3.26E+00	TWO SRVs FAIL TO OPEN (MANUAL)
DWH-1	1.00E-01	1.18E-01	2.06E+00	DRYWELL HATCH CLOSURE FAILURE (90MIN)
C63-CCFSOFTWARE	1.00E-04	1.01E-01	1.01E+03	Common cause failure of software
R-M5-LOPP	1.34E-01	7.77E-02	1.50E+00	RECOVERY OF OFFSITE POWER IN MODE 5
E50-SQV-CC-EQU_ALL	3.00E-04	7.59E-02	2.53E+02	CCF of all components in group 'E50-SQV-CC-EQU'
E50-BV_-OC-F004A	2.63E-04	6.62E-02	2.53E+02	MAINTENANCE VALVE F004A PLUGS/TRANSFERS CLOSED
E50-BV_-OC-F004D	2.63E-04	6.62E-02	2.53E+02	MAINTENANCE VALVE F004D PLUGS/TRANSFERS CLOSED
R-M5-G31	2.29E-01	6.48E-02	1.22E+00	RWCU/SDC RECOVERY
C12-XHE-FO-LEVEL2	3.21E-02	6.38E-02	2.92E+00	Operator fails to back-up CRD actuation
%M5_RPVLEAK	9.60E-04	5.44E-02	5.76E+01	RPV LEAK - MODE 5
%M6F_LOCA_RW	8.92E-09	5.26E-02	5.90E+06	LOCA - RWCU LINE BELWO TAF - MODE 6 FLOODED
%M5O_RPVLEAK	2.40E-04	4.42E-02	1.85E+02	RPV LEAK - MODE 5 OPEN
%M6U_LOCA_I	7.33E-08	4.32E-02	5.90E+05	LOCA IN INSTRUMENT LINE - MODE 6 UNFLOODED
%M5_LOCA_RW	7.13E-09	4.21E-02	5.90E+06	LOCA BELOW TAF IN RWCU
%M5O_LOPP	5.28E-04	4.00E-02	7.60E+01	LOSS OF PREF-POWER MODE 5 OPEN
%M5_LOPP	2.11E-03	3.78E-02	1.87E+01	LOSS OF PREF-POWR MODE 5
E50-SQV-CC-INJ_ALL	1.50E-04	3.72E-02	2.49E+02	CCF of all components in group 'E50-SQV-CC-INJ'
%M5_G31	3.02E-03	3.55E-02	1.27E+01	LOSS OF RWCU - MODE 5

Table 16.6-4

Internal Events Shutdown PRA Importance Measure Report

F-V and RAW Importance Measures Report
(F-V = Fussell-Vesely Importance Measure; RAW = Risk Achievement Worth Importance Measure)
Internal Event Shutdown Full Power
Core Damage Frequency = 1.70E-08 /year

Event Name	Probability	Fus Ves	RAW	Description
%M5O_LOCA_I	5.86E-08	3.46E-02	5.91E+05	LOCA - INSTRUMENT LINE BLEOW TAF - MODE 5 OPEN
B21-SQV-CC_ALL	1.50E-04	3.16E-02	2.11E+02	CCF of all components in group 'B21-SQV-CC'
C63-DTM-FC-ESFLG_ALL	3.00E-05	2.95E-02	9.82E+02	CCF of all components in group 'C63-DTM-FC-ESFLG'
%M5O_G31	7.56E-04	2.92E-02	3.96E+01	LOSS OF RWCU MODE 5 OPEN
%M6U_LOPP	6.60E-04	2.24E-02	3.46E+01	LOSS OF PREF-POWER - MODE 6 UNFLOODED
R-M6-LOPP	9.00E-02	2.24E-02	1.22E+00	RECOVERY OF OFFSITE POWER IN MODE 6
R21-DG_-FR-DGA	5.60E-02	2.01E-02	1.34E+00	DIESEL GENERATOR "A" FAILS TO RUN GIVEN START
R21-DG_-FR-DGB	5.60E-02	1.83E-02	1.31E+00	DIESEL GENERATOR "B" FAILS TO RUN GIVEN START
%M6U_G31	9.45E-04	1.82E-02	2.02E+01	LOSS OF RWCU - MODE 6 UNFLOODED
R-M6-G31	2.18E-01	1.82E-02	1.07E+00	FAILURE TO RECOVER RWCU/SDC
C63-LOG-FC-ESFLG_ALL	1.80E-05	1.75E-02	9.69E+02	CCF of all components in group 'C63-LOG-FC-ESFLG'
R21-XHE-FO-ADG	1.61E-02	1.73E-02	2.05E+00	OPERATOR FAILS TO CONTROL THE LOADS ON ANCILLARY DG BUSES
R21-DG_-TM-DGA	4.60E-02	1.37E-02	1.28E+00	STANDBY DIESEL GENERATOR "A" IN MAINTENANCE
%M6U_LOCA_RW	2.23E-09	1.31E-02	5.90E+06	LOCA - RWCU BELWO TAF - MODE 6 UNLFLOODED
B32-TM-LOOPA-IND	3.84E-02	1.23E-02	1.31E+00	ICS LOOP A IN TEST OR MAINTENANCE BY ITSELF
B32-TM-LOOPB-IND	3.84E-02	1.23E-02	1.31E+00	ICS LOOP B IN TEST OR MAINTENANCE BY ITSELF
R21-DG_-TM-DGB	4.60E-02	1.22E-02	1.25E+00	STANDBY DIESEL GENERATOR "B" IN MAINTENANCE
%M5O_LOCA_RW	1.78E-09	1.05E-02	5.90E+06	LOCA - RWCU LOCA BELOW TAF - MODE 5 OPEN
C12-BV_-RE-F013A	4.84E-02	9.58E-03	1.19E+00	MISPOSITION OF VALVE F013A
C12-BV_-RE-F013B	4.84E-02	9.58E-03	1.19E+00	MISPOSITION OF VALVE F013B
C12-BV_-RE-F015A	4.84E-02	9.58E-03	1.19E+00	MISPOSITION OF VALVE F015A
C12-BV_-RE-F015B	4.84E-02	9.58E-03	1.19E+00	MISPOSITION OF VALVE F015B
C12-BV_-RE-F018A	1.21E-02	9.09E-03	1.74E+00	MISPOSITION OF VALVE F018A
C12-BV_-RE-F021A	1.21E-02	9.09E-03	1.74E+00	MISPOSITION OF VALVE F021A
R13-INV-FC-CCFSR_ALL	1.14E-05	8.99E-03	7.91E+02	CCF of all components in group 'R13-INV-FC-CCFSR'
C12-BV_-RE-F003B	1.21E-02	8.82E-03	1.72E+00	MISPOSITION OF VALVE F003B
C12-BV_-RE-F018B	1.21E-02	8.82E-03	1.72E+00	MISPOSITION OF VALVE FO18B

Table 16.6-4

Internal Events Shutdown PRA Importance Measure Report

F-V and RAW Importance Measures Report
(F-V = Fussell-Vesely Importance Measure; RAW = Risk Achievement Worth Importance Measure)
Internal Event Shutdown Full Power
Core Damage Frequency = 1.70E-08 /year

Event Name	Probability	Fus Ves	RAW	Description
C12-BV_-RE-F021B	1.21E-02	8.82E-03	1.72E+00	MISPOSITION OF VALVE F021B
G21-MOV-CC-2_1_2	4.44E-04	8.11E-03	1.92E+01	CCF of two components: G21-MOV-CC-F332A & G21-MOV-CC-F332B
C12-MOV-CC-F023	4.00E-03	7.89E-03	2.96E+00	MOTOR OPERATED VALVE F023 FAILS TO OPEN
C12-MOV-OO-F024	4.00E-03	7.89E-03	2.96E+00	MOTOR OPERATED VALVE F024 FAILS TO CLOSE
C12-MOV-OO-F062A	4.00E-03	7.89E-03	2.96E+00	MOTOR OPERATED VALVE F062A FAILS TO CLOSE
C12-MOV-OO-F062B	4.00E-03	7.89E-03	2.96E+00	MOTOR OPERATED VALVE F062B FAILS TO CLOSE
R21-DG_-FR-ADGA	5.60E-02	7.71E-03	1.13E+00	ADG-A FAILS TO RUN
R21-DG_-FR-ADGB	5.60E-02	7.02E-03	1.12E+00	DIESEL GENERATOR FAILS TO RUN
R21-DG_-FR-CCF_1_2	4.41E-03	5.71E-03	2.29E+00	CCF of two components: R21-DG_-FR-DGA & R21-DG_-FR-DGB
E50-SQV-CC-INJ_1_5	2.38E-05	5.54E-03	2.33E+02	CCF of two components: E50-SQV-CC-INJ-F002A & E50-SQV-CC-INJ-F002E
E50-SQV-CC-INJ_4_8	2.38E-05	5.54E-03	2.33E+02	CCF of two components: E50-SQV-CC-INJ-F002D & E50-SQV-CC-INJ-F002H
E50-UV_-CC-INJ_ALL	1.72E-05	3.95E-03	2.31E+02	CCF of all components in group 'E50-UV_-CC-INJ'
C12-ACV-OO-F012	2.00E-03	3.93E-03	2.96E+00	AIR OPERATED VALVE F012 FAILS TO CLOSE
C12-ACV-OO-F030	2.00E-03	3.93E-03	2.96E+00	AIR OPERATED VALVE F030 FAILS TO CLOSE
E50-STR-PG_ALL	1.20E-05	2.71E-03	2.26E+02	CCF of all components in group 'E50-STR-PG'
C63-LT_-NO-ESFRX_ALL	3.60E-06	2.63E-03	7.29E+02	CCF of all components in group 'C63-LT_-NO-ESFRX'
P21-ACV-OO-F0004	2.00E-03	2.54E-03	2.26E+00	AIR OPERATED VALVE F0004 FAILS TO CLOSE
P21-ACV-OO-F0027	2.00E-03	2.54E-03	2.26E+00	AIR OPERATED VALVE F0027 FAILS TO CLOSE
P21-ACV-OO-F0061	2.00E-03	2.54E-03	2.26E+00	AIR OPERATED VALVE F0061 FAILS TO CLOSE
G21-MP_-FS-PLP	2.00E-03	2.51E-03	2.24E+00	MOTOR-DRIVEN LPI PUMP FAILS TO START
T23-POL-RP-SP	7.20E-06	2.26E-03	3.14E+02	SUPPRESSION POOL LEAKS CATASTROPHICALLY
%M5_LPSWS	1.06E-05	2.20E-03	2.09E+02	LOSS OF PLANT SERVICE WATER - MODE 5
E50-SQV-CO-F009A	9.60E-06	2.15E-03	2.25E+02	SQUIB DELUGE VALVE F009A SPUR. OPENING [#7]
E50-SQV-CO-F009D	9.60E-06	2.15E-03	2.25E+02	SQUIB DELUGE VALVE F009D SPUR. OPENING [#7]
E50-SQV-CO-F009E	9.60E-06	2.15E-03	2.25E+02	SQUIB DELUGE VALVE F009E SPUR. OPENING [#7]
E50-SQV-CO-F009H	9.60E-06	2.15E-03	2.25E+02	SQUIB DELUGE VALVE F009H SPUR. OPENING [#7]
E50-SQV-CO-F009J	9.60E-06	2.15E-03	2.25E+02	SQUIB DELUGE VALVE F009J SPUR. OPENING [#7]

Table 16.6-4

Internal Events Shutdown PRA Importance Measure Report

F-V and RAW Importance Measures Report (F-V = Fussell-Vesely Importance Measure; RAW = Risk Achievement Worth Importance Measure) Internal Event Shutdown Full Power Core Damage Frequency = 1.70E-08 /year				
Event Name	**Probability**	**Fus Ves**	**RAW**	**Description**
E50-SQV-CO-F009M	9.60E-06	2.15E-03	2.25E+02	SQUIB DELUGE VALVE F009M SPUR. OPENING [#7]
B21-UV_-CC-F102A	1.00E-04	2.06E-03	2.15E+01	CHECK VALVE F102A FAILS TO OPEN
B21-UV_-CC-F111A	1.00E-04	2.06E-03	2.15E+01	CHECK VALVE F111A FAILS TO OPEN
%M5O_LPSWS	2.66E-06	2.00E-03	7.53E+02	LOSS OF PLANT SERVICE WATER MODE 5 OPEN
U43-XHE-FO-LPCI	1.61E-03	1.93E-03	2.18E+00	OPERATOR FAILS TO ACTUATE U43 IN LPCI MODE
R21-NSC-TM-ANCA	1.50E-03	1.77E-03	2.17E+00	ADG BUS A IN TEST OR MAINTENANCE
C63-LDD-FC-ESFLOADS	1.86E-06	1.62E-03	8.72E+02	CCF OF ALL ESF LOAD DRIVERS
E50-POL-RP-POOLA	7.20E-06	1.59E-03	2.21E+02	GDCS POOLS A LEAKS CATASTROPHICALLY
E50-POL-RP-POOLD	7.20E-06	1.59E-03	2.21E+02	GDCS POOL D LEAKS CATASTROPHICALLY
%M6U_RWCU_BOC	1.16E-06	1.56E-03	1.34E+03	LOCA - RWCU OUTSIDE CONTAINMENT - MODE 6 UNFLOODED
%M6U_LPSWS	3.32E-06	1.42E-03	4.29E+02	LOSS OF PLANT SERVICE WATER - MODE 6 UNFLOODED
G21-UV_-OO-F331A	1.00E-03	1.10E-03	2.08E+00	CHECK VALVE F331A FAILS TO CLOSE
G21-UV_-OO-F331B	1.00E-03	1.10E-03	2.08E+00	CHECK VALVE F331B FAILS TO CLOSE
C63-DTM-FC-ESFLG_1_2_3	1.11E-06	9.48E-04	8.51E+02	CCF of three components: C63-DTM-FC-ESFD1 & C63-DTM-FC-ESFD2 & C63-DTM-FC-ESFD3
C63-DTM-FC-ESFLG_1_2_4	1.11E-06	9.48E-04	8.51E+02	CCF of three components: C63-DTM-FC-ESFD1 & C63-DTM-FC-ESFD2 & C63-DTM-FC-ESFD4
C63-DTM-FC-ESFLG_1_3_4	1.11E-06	9.48E-04	8.51E+02	CCF of three components: C63-DTM-FC-ESFD1 & C63-DTM-FC-ESFD3 & C63-DTM-FC-ESFD4
C63-DTM-FC-ESFLG_2_3_4	1.11E-06	9.48E-04	8.51E+02	CCF of three components: C63-DTM-FC-ESFD2 & C63-DTM-FC-ESFD3 & C63-DTM-FC-ESFD4
P21-AHU-FS_1_2	6.67E-04	8.06E-04	2.20E+00	CCF of two components: P21-AHU-FS-RCCWA & P21-AHU-FS-RCCWB
R21-AHU-FS-AHU3_1_2	6.67E-04	8.05E-04	2.20E+00	CCF of two components: R21-AHU-FS-3A & R21-AHU-FS-3B
P21-ACV-OO-F0016_1_2	1.93E-04	6.67E-04	4.44E+00	CCF of two components: P21-ACV-OO-F016A & P21-ACV-OO-F016B
R16-BT_-LP-CCFSR_ALL	8.14E-07	6.01E-04	7.35E+02	CCF of all components in group 'R16-BT_-LP-CCFSR'
B21-ACV-OC-F111A	2.40E-05	4.59E-04	2.00E+01	AIR-TESTABLE CHECK VALVE F111A FAILS TO REMAIN OPEN
C12-MOV-CC-F014_1_2	2.11E-04	4.00E-04	2.89E+00	CCF of two components: C12-MOV-CC-F014A & C12-MOV-CC-F014B

Table 16.6-4

Internal Events Shutdown PRA Importance Measure Report

F-V and RAW Importance Measures Report
(F-V = Fussell-Vesely Importance Measure; RAW = Risk Achievement Worth Importance Measure)
Internal Event Shutdown Full Power
Core Damage Frequency = 1.70E-08 /year

Event Name	Probability	Fus Ves	RAW	Description
C12-MOV-CC-F020_1_2	2.11E-04	4.00E-04	2.89E+00	CCF of two components: C12-MOV-CC-F020A & C12-MOV-CC-F020B
%M5_RWCU_BOC	3.73E-06	3.82E-04	1.03E+02	RWCU BREAK OUTSIDE CONTAINMENT - MODE 5
C12-ACV-OO-F012-F030_1_2	1.93E-04	3.65E-04	2.88E+00	CCF of two components: C12-ACV-OO-F012 & C12-ACV-OO-F030
E50-UV_-CC-EQU_ALL	1.72E-06	3.55E-04	2.07E+02	CCF of all components in group 'E50-UV_-CC-EQU'
R21-DG_-FS-CCF_1_2	2.86E-04	3.23E-04	2.12E+00	CCF of two components: R21-DG_-FS-DGA & R21-DG_-FS-DGB
C62-CCFSOFTWARE	1.00E-04	3.07E-04	4.05E+00	N-DCIS COMMON CAUSE SOFTWARE FAILURE
C62-CCFSOFTWARE_S	1.00E-04	3.07E-04	4.05E+00	N-DCIS SPURIOUS COMMON CAUSE SOFTWARE FAILURE
%M5O_RWCU_BOC	9.32E-07	2.85E-04	3.05E+02	LOCA - RWCU BREAK OUTSIDE CONTAINMENT - M5 OPEN
B21-UV_-CC-F102_1_2	2.99E-06	2.61E-04	8.81E+01	CCF of two components: B21-UV_-CC-F102A & B21-UV_-CC-F102B
B21-UV_-CC-F111_1_2	2.99E-06	2.61E-04	8.81E+01	CCF of two components: B21-UV_-CC-F111A & B21-UV_-CC-F111B
P21-ACV-OO-CCF23_1_2	2.22E-04	2.46E-04	2.10E+00	CCF of two components: P21-ACV-OO-F023A & P21-ACV-OO-F023B
%M5_LOCA_OT	1.84E-07	2.38E-04	1.29E+03	LOCA IN LINE OTHER THAN FW OR GDCS - MODE 5
R11-MCB-CC-CCFNORM_ALL	2.00E-04	2.20E-04	2.09E+00	CCF of all components in group 'R11-MCB-CC-CCFNORM'
P21-ACV-CC-F0023_1_2	1.93E-04	2.11E-04	2.08E+00	CCF of two components: P21-ACV-CC-F0023A & P21-ACV-CC-F0023B
B21-UV_-CC-F102B	1.00E-04	1.89E-04	2.89E+00	CHECK VALVE F102B FAILS TO OPEN
B21-UV_-CC-F111B	1.00E-04	1.89E-04	2.89E+00	CHECK VALVE F111B FAILS TO OPEN
C12-UV_-CC-F022	1.00E-04	1.85E-04	2.85E+00	CHECK VALVE F022 FAILS TO OPEN
C62-DTM-FC-PIPMP_1_2	6.67E-05	1.83E-04	3.72E+00	CCF of two components: C62-DTM-FC-PIPA & C62-DTM-FC-PIPB
P21-ACV-OO-XTIE_1_2_3	1.57E-04	1.69E-04	2.06E+00	CCF of three components: P21-ACV-OO-F0004 & P21-ACV-OO-F0027 & P21-ACV-OO-F0061
P21-MP_-FS_ALL	1.56E-04	1.67E-04	2.06E+00	CCF of all components in group 'P21-MP_-FS'
R21-MOD-CC-EXH_ALL	1.50E-04	1.60E-04	2.06E+00	CCF of all components in group 'R21-MOD-CC-EXH'
R21-MOD-CC-INL_ALL	1.50E-04	1.60E-04	2.06E+00	CCF of all components in group 'R21-MOD-CC-INL'
E50-SQV-CC-INJ_1_2_5	7.94E-07	1.59E-04	2.01E+02	CCF of three components: E50-SQV-CC-INJ-F002A & E50-SQV-CC-INJ-F002B & E50-SQV-C

Table 16.6-4

Internal Events Shutdown PRA Importance Measure Report

F-V and RAW Importance Measures Report (F-V = Fussell-Vesely Importance Measure; RAW = Risk Achievement Worth Importance Measure) Internal Event Shutdown Full Power Core Damage Frequency = 1.70E-08 /year				
Event Name	**Probability**	**Fus Ves**	**RAW**	**Description**
E50-SQV-CC-INJ_1_3_5	7.94E-07	1.59E-04	2.01E+02	CCF of three components: E50-SQV-CC-INJ-F002A & E50-SQV-CC-INJ-F002C & E50-SQV-C
E50-SQV-CC-INJ_1_4_5	7.94E-07	1.59E-04	2.01E+02	CCF of three components: E50-SQV-CC-INJ-F002A & E50-SQV-CC-INJ-F002D & E50-SQV-C
E50-SQV-CC-INJ_1_4_8	7.94E-07	1.59E-04	2.01E+02	CCF of three components: E50-SQV-CC-INJ-F002A & E50-SQV-CC-INJ-F002D & E50-SQV-C
E50-SQV-CC-INJ_1_5_6	7.94E-07	1.59E-04	2.01E+02	CCF of three components: E50-SQV-CC-INJ-F002A & E50-SQV-CC-INJ-F002E & E50-SQV-C
E50-SQV-CC-INJ_1_5_7	7.94E-07	1.59E-04	2.01E+02	CCF of three components: E50-SQV-CC-INJ-F002A & E50-SQV-CC-INJ-F002E & E50-SQV-C
E50-SQV-CC-INJ_1_5_8	7.94E-07	1.59E-04	2.01E+02	CCF of three components: E50-SQV-CC-INJ-F002A & E50-SQV-CC-INJ-F002E & E50-SQV-C
E50-SQV-CC-INJ_2_4_8	7.94E-07	1.59E-04	2.01E+02	CCF of three components: E50-SQV-CC-INJ-F002B & E50-SQV-CC-INJ-F002D & E50-SQV-C
E50-SQV-CC-INJ_3_4_8	7.94E-07	1.59E-04	2.01E+02	CCF of three components: E50-SQV-CC-INJ-F002C & E50-SQV-CC-INJ-F002D & E50-SQV-C
E50-SQV-CC-INJ_4_5_8	7.94E-07	1.59E-04	2.01E+02	CCF of three components: E50-SQV-CC-INJ-F002D & E50-SQV-CC-INJ-F002E & E50-SQV-C
E50-SQV-CC-INJ_4_6_8	7.94E-07	1.59E-04	2.01E+02	CCF of three components: E50-SQV-CC-INJ-F002D & E50-SQV-CC-INJ-F002F & E50-SQV-C
E50-SQV-CC-INJ_4_7_8	7.94E-07	1.59E-04	2.01E+02	CCF of three components: E50-SQV-CC-INJ-F002D & E50-SQV-CC-INJ-F002G & E50-SQV-C
P21-MOV-CC_ALL	1.48E-04	1.58E-04	2.06E+00	CCF of all components in group 'P21-MOV-CC'
P41-MOV-CC-PMP_ALL	1.45E-04	1.54E-04	2.05E+00	CCF of all components in group 'P41-MOV-CC-PMP'
C63-PSP-FO-ESFEP_ALL	3.60E-07	1.42E-04	3.95E+02	CCF of all components in group 'C63-PSP-FO-ESFEP'
P41-ACV-CC_ALL	1.21E-04	1.27E-04	2.03E+00	CCF of all components in group 'P41-ACV-CC'
R11-MCB-OO-CCFALT_ALL	1.20E-04	1.25E-04	2.03E+00	CCF of all components in group 'R11-MCB-OO-CCFALT'

Table 16.6-4

Internal Events Shutdown PRA Importance Measure Report

F-V and RAW Importance Measures Report (F-V = Fussell-Vesely Importance Measure; RAW = Risk Achievement Worth Importance Measure) **Internal Event Shutdown Full Power** **Core Damage Frequency = 1.70E-08 /year**				
Event Name	**Probability**	**Fus Ves**	**RAW**	**Description**
B21-SQV-CC_1_2_3	7.94E-07	1.23E-04	1.55E+02	CCF of three components: B21-SQV-CC-F004A & B21-SQV-CC-F004B & B21-SQV-CC-F004C
B21-SQV-CC_1_2_4	7.94E-07	1.23E-04	1.55E+02	CCF of three components: B21-SQV-CC-F004A & B21-SQV-CC-F004B & B21-SQV-CC-F004D
B21-SQV-CC_1_2_5	7.94E-07	1.23E-04	1.55E+02	CCF of three components: B21-SQV-CC-F004A & B21-SQV-CC-F004B & B21-SQV-CC-F004E
B21-SQV-CC_1_2_6	7.94E-07	1.23E-04	1.55E+02	CCF of three components: B21-SQV-CC-F004A & B21-SQV-CC-F004B & B21-SQV-CC-F004F
B21-SQV-CC_1_3_4	7.94E-07	1.23E-04	1.55E+02	CCF of three components: B21-SQV-CC-F004A & B21-SQV-CC-F004C & B21-SQV-CC-F004D
B21-SQV-CC_1_3_5	7.94E-07	1.23E-04	1.55E+02	CCF of three components: B21-SQV-CC-F004A & B21-SQV-CC-F004C & B21-SQV-CC-F004E
B21-SQV-CC_1_3_6	7.94E-07	1.23E-04	1.55E+02	CCF of three components: B21-SQV-CC-F004A & B21-SQV-CC-F004C & B21-SQV-CC-F004F
B21-SQV-CC_1_4_5	7.94E-07	1.23E-04	1.55E+02	CCF of three components: B21-SQV-CC-F004A & B21-SQV-CC-F004D & B21-SQV-CC-F004E
B21-SQV-CC_1_4_6	7.94E-07	1.23E-04	1.55E+02	CCF of three components: B21-SQV-CC-F004A & B21-SQV-CC-F004D & B21-SQV-CC-F004F
B21-SQV-CC_1_5_6	7.94E-07	1.23E-04	1.55E+02	CCF of three components: B21-SQV-CC-F004A & B21-SQV-CC-F004E & B21-SQV-CC-F004F
B21-SQV-CC_2_3_4	7.94E-07	1.23E-04	1.55E+02	CCF of three components: B21-SQV-CC-F004B & B21-SQV-CC-F004C & B21-SQV-CC-F004D
B21-SQV-CC_2_3_5	7.94E-07	1.23E-04	1.55E+02	CCF of three components: B21-SQV-CC-F004B & B21-SQV-CC-F004C & B21-SQV-CC-F004E
B21-SQV-CC_2_3_6	7.94E-07	1.23E-04	1.55E+02	CCF of three components: B21-SQV-CC-F004B & B21-SQV-CC-F004C & B21-SQV-CC-F004F

Table 16.6-4

Internal Events Shutdown PRA Importance Measure Report

F-V and RAW Importance Measures Report (F-V = Fussell-Vesely Importance Measure; RAW = Risk Achievement Worth Importance Measure) Internal Event Shutdown Full Power Core Damage Frequency = 1.70E-08 /year				
Event Name	**Probability**	**Fus Ves**	**RAW**	**Description**
B21-SQV-CC_2_4_5	7.94E-07	1.23E-04	1.55E+02	CCF of three components: B21-SQV-CC-F004B & B21-SQV-CC-F004D & B21-SQV-CC-F004E
B21-SQV-CC_2_4_6	7.94E-07	1.23E-04	1.55E+02	CCF of three components: B21-SQV-CC-F004B & B21-SQV-CC-F004D & B21-SQV-CC-F004F
B21-SQV-CC_2_5_6	7.94E-07	1.23E-04	1.55E+02	CCF of three components: B21-SQV-CC-F004B & B21-SQV-CC-F004E & B21-SQV-CC-F004F
B21-SQV-CC_3_4_5	7.94E-07	1.23E-04	1.55E+02	CCF of three components: B21-SQV-CC-F004C & B21-SQV-CC-F004D & B21-SQV-CC-F004E
B21-SQV-CC_3_4_6	7.94E-07	1.23E-04	1.55E+02	CCF of three components: B21-SQV-CC-F004C & B21-SQV-CC-F004D & B21-SQV-CC-F004F
B21-SQV-CC_3_5_6	7.94E-07	1.23E-04	1.55E+02	CCF of three components: B21-SQV-CC-F004C & B21-SQV-CC-F004E & B21-SQV-CC-F004F
B21-SQV-CC_4_5_6	7.94E-07	1.23E-04	1.55E+02	CCF of three components: B21-SQV-CC-F004D & B21-SQV-CC-F004E & B21-SQV-CC-F004F
P41-MPW-FS_ALL	1.15E-04	1.19E-04	2.02E+00	CCF of all components in group 'P41-MPW-FS'
G31-UV_-OO_1_2	5.26E-05	9.60E-05	2.81E+00	CCF of two components: G31-UV_-OO-F023A & G31-UV_-OO-F024A
E50-UV_-CC-INJ_1_2_5	4.03E-07	7.93E-05	1.97E+02	CCF of three components: E50-UV_-CC-INJ-F003A & E50-UV_-CC-INJ-F003B & E50-UV_-C
E50-UV_-CC-INJ_1_3_5	4.03E-07	7.93E-05	1.97E+02	CCF of three components: E50-UV_-CC-INJ-F003A & E50-UV_-CC-INJ-F003C & E50-UV_-C
E50-UV_-CC-INJ_1_4_5	4.03E-07	7.93E-05	1.97E+02	CCF of three components: E50-UV_-CC-INJ-F003A & E50-UV_-CC-INJ-F003D & E50-UV_-C
E50-UV_-CC-INJ_1_4_8	4.03E-07	7.93E-05	1.97E+02	CCF of three components: E50-UV_-CC-INJ-F003A & E50-UV_-CC-INJ-F003D & E50-UV_-C
E50-UV_-CC-INJ_1_5_6	4.03E-07	7.93E-05	1.97E+02	CCF of three components: E50-UV_-CC-INJ-F003A & E50-UV_-CC-INJ-F003E & E50-UV_-C

Table 16.6-4

Internal Events Shutdown PRA Importance Measure Report

F-V and RAW Importance Measures Report (F-V = Fussell-Vesely Importance Measure; RAW = Risk Achievement Worth Importance Measure) Internal Event Shutdown Full Power Core Damage Frequency = 1.70E-08 /year				
Event Name	**Probability**	**Fus Ves**	**RAW**	**Description**
E50-UV_-CC-INJ_1_5_7	4.03E-07	7.93E-05	1.97E+02	CCF of three components: E50-UV_-CC-INJ-F003A & E50-UV_-CC-INJ-F003E & E50-UV_-C
E50-UV_-CC-INJ_1_5_8	4.03E-07	7.93E-05	1.97E+02	CCF of three components: E50-UV_-CC-INJ-F003A & E50-UV_-CC-INJ-F003E & E50-UV_-C
E50-UV_-CC-INJ_2_4_8	4.03E-07	7.93E-05	1.97E+02	CCF of three components: E50-UV_-CC-INJ-F003B & E50-UV_-CC-INJ-F003D & E50-UV_-C
E50-UV_-CC-INJ_3_4_8	4.03E-07	7.93E-05	1.97E+02	CCF of three components: E50-UV_-CC-INJ-F003C & E50-UV_-CC-INJ-F003D & E50-UV_-C
E50-UV_-CC-INJ_4_5_8	4.03E-07	7.93E-05	1.97E+02	CCF of three components: E50-UV_-CC-INJ-F003D & E50-UV_-CC-INJ-F003E & E50-UV_-C
E50-UV_-CC-INJ_4_6_8	4.03E-07	7.93E-05	1.97E+02	CCF of three components: E50-UV_-CC-INJ-F003D & E50-UV_-CC-INJ-F003F & E50-UV_-C
E50-UV_-CC-INJ_4_7_8	4.03E-07	7.93E-05	1.97E+02	CCF of three components: E50-UV_-CC-INJ-F003D & E50-UV_-CC-INJ-F003G & E50-UV_-C
B21-UV_-OC-F102A	4.80E-06	7.52E-05	1.66E+01	CHECK VALVE F102A FAILS TO REMAIN OPEN
C12-MP_-FR-C001_1_2	3.96E-05	7.12E-05	2.79E+00	CCF of two components: C12-MP_-FR-C001A & C12-MP_-FR-C001B
%M5O_LOCA_OT	4.60E-08	5.68E-05	1.23E+03	LOCA - OTHER THAN GDCS & FEEDWATER - MODE 5 OPEN
%M5_LOCA_FW	1.21E-08	5.40E-05	4.44E+03	LOCA - FEEDWATER MODE 5
C62-LOG-FC-PIPMP_ALL	1.80E-05	4.54E-05	3.50E+00	CCF of all components in group 'C62-LOG-FC-PIPMP'
B21-ACV-OC-F111B	2.40E-05	4.14E-05	2.72E+00	AIR-TESTABLE CHECK VALVE F111B FAILS TO REMAIN OPEN
G21-UV_-CC-A_1_2	2.99E-06	4.09E-05	1.46E+01	CCF of two components: G21-UV_-CC-F333A & G21-UV_-CC-F333B
R12-XFL-LP-XA2-02A	1.92E-05	3.70E-05	2.91E+00	R12-A2-02A XMFR FROM PIP BUS 1000A3 FAILS TO OPERATE
E50-SQV-CC-INJ_1_4	2.38E-05	3.50E-05	2.46E+00	CCF of two components: E50-SQV-CC-INJ-F002A & E50-SQV-CC-INJ-F002D
E50-SQV-CC-INJ_1_8	2.38E-05	3.50E-05	2.46E+00	CCF of two components: E50-SQV-CC-INJ-F002A & E50-SQV-CC-INJ-F002H
E50-SQV-CC-INJ_4_5	2.38E-05	3.50E-05	2.46E+00	CCF of two components: E50-SQV-CC-INJ-F002D & E50-SQV-CC-INJ-F002E
E50-SQV-CC-INJ_5_8	2.38E-05	3.50E-05	2.46E+00	CCF of two components: E50-SQV-CC-INJ-F002E & E50-SQV-CC-INJ-F002H
R12-XFL-LP-XB2-02B	1.92E-05	3.25E-05	2.68E+00	R12-B2-02B XMFR FROM PIP BUS 1000B3 FAILS TO OPERATE

Table 16.6-4

Internal Events Shutdown PRA Importance Measure Report

F-V and RAW Importance Measures Report
(F-V = Fussell-Vesely Importance Measure; RAW = Risk Achievement Worth Importance Measure)
Internal Event Shutdown Full Power
Core Damage Frequency = 1.70E-08 /year

Event Name	Probability	Fus Ves	RAW	Description
P21-MP_-FR_ALL	1.33E-05	3.12E-05	3.32E+00	CCF of all components in group 'P21-MP_-FR'
B21-SQV-CC_1_2	2.38E-05	3.05E-05	2.25E+00	CCF of two components: B21-SQV-CC-F004A & B21-SQV-CC-F004B
B21-SQV-CC_1_3	2.38E-05	3.05E-05	2.25E+00	CCF of two components: B21-SQV-CC-F004A & B21-SQV-CC-F004C
B21-SQV-CC_1_4	2.38E-05	3.05E-05	2.25E+00	CCF of two components: B21-SQV-CC-F004A & B21-SQV-CC-F004D
B21-SQV-CC_1_5	2.38E-05	3.05E-05	2.25E+00	CCF of two components: B21-SQV-CC-F004A & B21-SQV-CC-F004E
B21-SQV-CC_1_6	2.38E-05	3.05E-05	2.25E+00	CCF of two components: B21-SQV-CC-F004A & B21-SQV-CC-F004F
B21-SQV-CC_2_3	2.38E-05	3.05E-05	2.25E+00	CCF of two components: B21-SQV-CC-F004B & B21-SQV-CC-F004C
B21-SQV-CC_2_4	2.38E-05	3.05E-05	2.25E+00	CCF of two components: B21-SQV-CC-F004B & B21-SQV-CC-F004D
B21-SQV-CC_2_5	2.38E-05	3.05E-05	2.25E+00	CCF of two components: B21-SQV-CC-F004B & B21-SQV-CC-F004E
B21-SQV-CC_2_6	2.38E-05	3.05E-05	2.25E+00	CCF of two components: B21-SQV-CC-F004B & B21-SQV-CC-F004F
B21-SQV-CC_3_4	2.38E-05	3.05E-05	2.25E+00	CCF of two components: B21-SQV-CC-F004C & B21-SQV-CC-F004D
B21-SQV-CC_3_5	2.38E-05	3.05E-05	2.25E+00	CCF of two components: B21-SQV-CC-F004C & B21-SQV-CC-F004E
B21-SQV-CC_3_6	2.38E-05	3.05E-05	2.25E+00	CCF of two components: B21-SQV-CC-F004C & B21-SQV-CC-F004F
B21-SQV-CC_4_5	2.38E-05	3.05E-05	2.25E+00	CCF of two components: B21-SQV-CC-F004D & B21-SQV-CC-F004E
B21-SQV-CC_4_6	2.38E-05	3.05E-05	2.25E+00	CCF of two components: B21-SQV-CC-F004D & B21-SQV-CC-F004F
B21-SQV-CC_5_6	2.38E-05	3.05E-05	2.25E+00	CCF of two components: B21-SQV-CC-F004E & B21-SQV-CC-F004F
P21-AHU-FR_1_2	1.26E-05	2.91E-05	3.28E+00	CCF of two components: P21-AHU-FR-RCCWA & P21-AHU-FR-RCCWB
E50-UV_-CC-INJ_1_5	1.52E-07	2.86E-05	1.87E+02	CCF of two components: E50-UV_-CC-INJ-F003A & E50-UV_-CC-INJ-F003E
E50-UV_-CC-INJ_4_8	1.52E-07	2.86E-05	1.87E+02	CCF of two components: E50-UV_-CC-INJ-F003D & E50-UV_-CC-INJ-F003H
P41-FAN-FR_ALL	1.20E-05	2.72E-05	3.24E+00	CCF of all components in group 'P41-FAN-FR'
R12-MCB-CO-BIA2-02A	1.44E-05	2.71E-05	2.86E+00	R12-A2-02A XMFR INPUT CIRCUIT BREAKER FROM PIP BUS 1000A3 OPENS SPURIOUSLY
R12-MCB-CO-BIB2-02B	1.44E-05	2.37E-05	2.63E+00	R12-B2-02B XMFR INPUT CIRCUIT BREAKER FROM PIP BUS 1000B3 OPENS SPURIOUSLY
C12-MP_-FR-C001OIL_1_2	1.41E-05	2.32E-05	2.63E+00	CCF of two components: C12-MP_-FR-C001AOIL & C12-MP_-FR-C001BOIL
R12-LCB-CO-BOA2-02A	1.20E-05	2.22E-05	2.83E+00	R12-A2-02A XMFR OUTPUT CIRCUIT BREAKER TO BUS R12-A2-02A OPEN SPURIOUSLY

Table 16.6-4

Internal Events Shutdown PRA Importance Measure Report

F-V and RAW Importance Measures Report
(F-V = Fussell-Vesely Importance Measure; RAW = Risk Achievement Worth Importance Measure)
Internal Event Shutdown Full Power
Core Damage Frequency = 1.70E-08 /year

Event Name	Probability	Fus Ves	RAW	Description
C12-MOV-CO-F024	1.20E-05	1.94E-05	2.61E+00	MOTOR OPERATED VALVE F024 FAILS TO REMAIN CLOSED
C12-MOV-CO-F062A	1.20E-05	1.94E-05	2.61E+00	MOTOR OPERATED VALVE F062A FAILS TO REMAIN CLOSE
C12-MOV-CO-F062B	1.20E-05	1.94E-05	2.61E+00	MOTOR OPERATED VALVE F062B FAILS TO REMAIN CLOSED
R12-LCB-CO-BOB2-02B	1.20E-05	1.94E-05	2.61E+00	R12-B2-02B XMFR OUTPUT CIRCUIT BREAKER TO BUS R12-B2-02B OPEN SPURIOUSLY
%M6U_LOCA_FW	3.77E-09	1.60E-05	4.23E+03	LOCA IN FEEDWATER LINE - MODE 6 UNFLOODED
%M5_LOCA_G	1.39E-08	1.54E-05	1.10E+03	LOCA - GDCS MODE 5
C63-FT_-NO-ESFSD_ALL	1.66E-06	1.52E-05	1.01E+01	CCF of all components in group 'C63-FT_-NO-ESFSD'
E50-SQV-CC-EQU_1_2_3	1.11E-05	1.32E-05	2.19E+00	CCF of three components: E50-SQV-CC-EQU-F006A & E50-SQV-CC-EQU-F006B & E50-SQV-C
E50-SQV-CC-EQU_1_2_4	1.11E-05	1.32E-05	2.19E+00	CCF of three components: E50-SQV-CC-EQU-F006A & E50-SQV-CC-EQU-F006B & E50-SQV-C
E50-SQV-CC-EQU_1_3_4	1.11E-05	1.32E-05	2.19E+00	CCF of three components: E50-SQV-CC-EQU-F006A & E50-SQV-CC-EQU-F006C & E50-SQV-C
E50-SQV-CC-EQU_2_3_4	1.11E-05	1.32E-05	2.19E+00	CCF of three components: E50-SQV-CC-EQU-F006B & E50-SQV-CC-EQU-F006C & E50-SQV-C
%M5O_LOCA_FW	3.01E-09	1.24E-05	4.05E+03	LOCA - FEEDWATER - MODE 5 OPEN
P41-STR-PG_ALL	5.68E-06	1.11E-05	2.91E+00	CCF of all components in group 'P41-STR-PG'
G21-BV_-OC-F334	7.20E-07	8.77E-06	1.30E+01	MANUAL VALVE F334 PLUGS-TRANSFERS CLOSED
C63-LT_-NO-ESFRX_1_2_3	1.91E-08	8.42E-06	4.40E+02	CCF of three components: C63-LT_-NO-ESFRXLVLA & C63-LT_-NO-ESFRXLVLB & C63-LT_-N
C63-LT_-NO-ESFRX_1_2_4	1.91E-08	8.42E-06	4.40E+02	CCF of three components: C63-LT_-NO-ESFRXLVLA & C63-LT_-NO-ESFRXLVLB & C63-LT_-N
C63-LT_-NO-ESFRX_1_3_4	1.91E-08	8.42E-06	4.40E+02	CCF of three components: C63-LT_-NO-ESFRXLVLA & C63-LT_-NO-ESFRXLVLC & C63-LT_-N
C63-LT_-NO-ESFRX_2_3_4	1.91E-08	8.42E-06	4.40E+02	CCF of three components: C63-LT_-NO-ESFRXLVLB & C63-LT_-NO-ESFRXLVLC & C63-LT_-N

Table 16.6-4

Internal Events Shutdown PRA Importance Measure Report

F-V and RAW Importance Measures Report (F-V = Fussell-Vesely Importance Measure; RAW = Risk Achievement Worth Importance Measure) Internal Event Shutdown Full Power Core Damage Frequency = 1.70E-08 /year				
Event Name	**Probability**	**Fus Ves**	**RAW**	**Description**
R11-BAC-LP-100A3	4.80E-06	7.87E-06	2.62E+00	6.9 KV AC PIP-A LOADS BUS 1000A3 FAILS DURING OPERATION
R11-BAC-TM-100A3	4.80E-06	7.87E-06	2.62E+00	6.9 KV AC PIP-A LOADS BUS 1000A3 IN MAINTENANCE
R12-BAC-LP-A2-02A	4.80E-06	7.87E-06	2.62E+00	480 VAC BUS A2-02A FAILS DURING OPERATION
R12-BAC-TM-A2-02A	4.80E-06	7.87E-06	2.62E+00	480 VAC BUS A2-02A IN MAINTENANCE
P41-FAN-FR_1_2	4.44E-06	7.83E-06	2.73E+00	CCF of two components: P41-FAN-FR-0001A & P41-FAN-FR-0001B
P41-FAN-FR_1_4	4.44E-06	7.83E-06	2.73E+00	CCF of two components: P41-FAN-FR-0001A & P41-FAN-FR-0002B
P41-FAN-FR_2_3	4.44E-06	7.83E-06	2.73E+00	CCF of two components: P41-FAN-FR-0001B & P41-FAN-FR-0002A
P41-FAN-FR_3_4	4.44E-06	7.83E-06	2.73E+00	CCF of two components: P41-FAN-FR-0002A & P41-FAN-FR-0002B
B21-UV_-OC-F102B	4.80E-06	6.94E-06	2.43E+00	CHECK VALVE F102B FAILS TO REMAIN OPEN
C12-UV_-OC-F022	4.80E-06	6.94E-06	2.43E+00	CHECK VALVE F022 FAILS TO REMAIN OPEN
R11-BAC-LP-100B3	4.80E-06	6.94E-06	2.43E+00	6.9 KV AC PIP-A LOADS BUS 1000B3 FAILS DURING OPERATION
R11-BAC-TM-100B3	4.80E-06	6.94E-06	2.43E+00	6.9 KV AC PIP-A LOADS BUS 1000B3 IN MAINTENANCE
R12-BAC-LP-B2-02B	4.80E-06	6.94E-06	2.43E+00	480 VAC BUS B2-02B FAILS DURING OPERATION
R12-BAC-TM-B2-02B	4.80E-06	6.94E-06	2.43E+00	480 VAC BUS B2-02B IN MAINTENANCE
P41-MPW-FR_ALL	3.20E-06	5.24E-06	2.60E+00	CCF of all components in group 'P41-MPW-FR'
%M6F_RWCU_BOC	4.66E-06	4.97E-06	2.06E+00	RWCU BREAK OUTSIDE CONTAINMENT - MODE 6 FLOODED
C12-MOV-OC-F023	3.36E-06	4.61E-06	2.34E+00	MOTOR OPERATED VALVE F023 FAILS TO REMAIN OPEN
C12-UV_-CC-F019_1_2	2.99E-06	3.99E-06	2.31E+00	CCF of two components: C12-UV_-CC-F019A & C12-UV_-CC-F019B
%M5O_LOCA_G	3.48E-09	3.39E-06	9.43E+02	LOCA - GDCS - MODE 5 OPEN
C62-LDD-FC-LOADS	1.86E-06	2.55E-06	2.34E+00	COMMON CAUSE FAILURE OF REMAINING NDCIS LOAD DRIVERS
C62-PT_-NO-PIPRC_ALL	1.73E-06	2.17E-06	2.22E+00	CCF of all components in group 'C62-PT_-NO-PIPRC'
%M6U_LOCA_OT	5.75E-08	2.15E-06	3.82E+01	LOCA - OTHER THAN FW OR GDCS - MODE 6 UNFLOODED
E50-SQV-CC-INJ_1_2_4	7.94E-07	9.16E-07	2.14E+00	CCF of three components: E50-SQV-CC-INJ-F002A & E50-SQV-CC-INJ-F002B & E50-SQV-C
E50-SQV-CC-INJ_1_2_8	7.94E-07	9.16E-07	2.14E+00	CCF of three components: E50-SQV-CC-INJ-F002A & E50-SQV-CC-INJ-F002B & E50-SQV-C

Table 16.6-4

Internal Events Shutdown PRA Importance Measure Report

F-V and RAW Importance Measures Report (F-V = Fussell-Vesely Importance Measure; RAW = Risk Achievement Worth Importance Measure) Internal Event Shutdown Full Power Core Damage Frequency = 1.70E-08 /year				
Event Name	**Probability**	**Fus Ves**	**RAW**	**Description**
E50-SQV-CC-INJ_1_3_4	7.94E-07	9.16E-07	2.14E+00	CCF of three components: E50-SQV-CC-INJ-F002A & E50-SQV-CC-INJ-F002C & E50-SQV-C
E50-SQV-CC-INJ_1_3_8	7.94E-07	9.16E-07	2.14E+00	CCF of three components: E50-SQV-CC-INJ-F002A & E50-SQV-CC-INJ-F002C & E50-SQV-C
E50-SQV-CC-INJ_1_4_6	7.94E-07	9.16E-07	2.14E+00	CCF of three components: E50-SQV-CC-INJ-F002A & E50-SQV-CC-INJ-F002D & E50-SQV-C
E50-SQV-CC-INJ_1_4_7	7.94E-07	9.16E-07	2.14E+00	CCF of three components: E50-SQV-CC-INJ-F002A & E50-SQV-CC-INJ-F002D & E50-SQV-C
E50-SQV-CC-INJ_1_6_8	7.94E-07	9.16E-07	2.14E+00	CCF of three components: E50-SQV-CC-INJ-F002A & E50-SQV-CC-INJ-F002F & E50-SQV-C
E50-SQV-CC-INJ_1_7_8	7.94E-07	9.16E-07	2.14E+00	CCF of three components: E50-SQV-CC-INJ-F002A & E50-SQV-CC-INJ-F002G & E50-SQV-C
E50-SQV-CC-INJ_2_4_5	7.94E-07	9.16E-07	2.14E+00	CCF of three components: E50-SQV-CC-INJ-F002B & E50-SQV-CC-INJ-F002D & E50-SQV-C
E50-SQV-CC-INJ_2_5_8	7.94E-07	9.16E-07	2.14E+00	CCF of three components: E50-SQV-CC-INJ-F002B & E50-SQV-CC-INJ-F002E & E50-SQV-C
E50-SQV-CC-INJ_3_4_5	7.94E-07	9.16E-07	2.14E+00	CCF of three components: E50-SQV-CC-INJ-F002C & E50-SQV-CC-INJ-F002D & E50-SQV-C
E50-SQV-CC-INJ_3_5_8	7.94E-07	9.16E-07	2.14E+00	CCF of three components: E50-SQV-CC-INJ-F002C & E50-SQV-CC-INJ-F002E & E50-SQV-C
E50-SQV-CC-INJ_4_5_6	7.94E-07	9.16E-07	2.14E+00	CCF of three components: E50-SQV-CC-INJ-F002D & E50-SQV-CC-INJ-F002E & E50-SQV-C
E50-SQV-CC-INJ_4_5_7	7.94E-07	9.16E-07	2.14E+00	CCF of three components: E50-SQV-CC-INJ-F002D & E50-SQV-CC-INJ-F002E & E50-SQV-C
E50-SQV-CC-INJ_5_6_8	7.94E-07	9.16E-07	2.14E+00	CCF of three components: E50-SQV-CC-INJ-F002E & E50-SQV-CC-INJ-F002F & E50-SQV-C

Table 16.6-4

Internal Events Shutdown PRA Importance Measure Report

F-V and RAW Importance Measures Report (F-V = Fussell-Vesely Importance Measure; RAW = Risk Achievement Worth Importance Measure) **Internal Event Shutdown Full Power** **Core Damage Frequency = 1.70E-08 /year**				
Event Name	**Probability**	**Fus Ves**	**RAW**	**Description**
E50-SQV-CC-INJ_5_7_8	7.94E-07	9.16E-07	2.14E+00	CCF of three components: E50-SQV-CC-INJ-F002E & E50-SQV-CC-INJ-F002G & E50-SQV-C

Table 16.6-5
Shutdown PRA Core Damage Sequences

Event Tree / Initiating Events	Mode	Core damage sequences
Loss of PSWS	5	M5-LPSWS006 M5-LPSWS007 M5-LPSWS010 M5-LPSWS011 M5-LPSWS012
Loss of RWCU/SDC	5	M5-RWCU009 M5-RWCU010 M5-RWCU014 M5-RWCU015 M5-RWCU016
Loss of Pref Power	5	M5-LOPP010 M5-LOPP011 M5-LOPP015 M5-LOPP016 M5-LOPP017
Loss of PSWS	5 open	M5O-LPSWS005 M5O-LPSWS006 M5O-LPSWS009 M5O-LPSWS010 M5O-LPSWS011
Loss of RWCU/SDC	5 open	M5O-RWCU008 M5O-RWCU009 M5O-RWCU013 M5O-RWCU014 M5O-RWCU015
Loss of Pref Power	5 open	M5O-LOPP009 M5O-LOPP010 M5O-LOPP014 M5O-LOPP015 M5O-LOPP016
Loss of PSWS	6 Unflooded	M6U-LPSWS004
Loss of RWCU/SDC	6 Unflooded	M6U-RWCU006
Loss of Pref Power	6 Unflooded	M6U-LOPP007
LOCA - RWCU/SDC below TAF	5	M5-LOCA-RW005 M5-LOCA-RW006 M5-LOCA-RW007
LOCA - Other than FW or GDCS	5	M5-LOCA-OT005 M5-LOCA-OT006
LOCA - FW Line A	5	M5-LOCA-FW003
LOCA - Instrument Line below TAF	5	M5-LOCA-I005 M5-LOCA-I006

Table 16.6-5

Shutdown PRA Core Damage Sequences

Event Tree / Initiating Events	Mode	Core damage sequences
		M5-LOCA-I007
LOCA - GDCS	5	M5-LOCA-G005 M5-LOCA-G006
LOCA - RWCU/SDC below TAF	5 open	M5O-LOCA-RW005 M5O-LOCA-RW006 M5O-LOCA-RW007
LOCA - Other than FW or GDCS	5 open	M5O-LOCA-OT005 M5O-LOCA-OT006
LOCA - FW Line A	5 open	M5O-LOCA-FW003
LOCA - Instrument Line below TAF	5 open	M5O-LOCA-I005 M5O-LOCA-I006 M5O-LOCA-I007
LOCA - GDCS	5 open	M5O-LOCA-G005 M5O-LOCA-G006
LOCA - RWCU/SDC below TAF	6 Unflooded	M6U-LOCA-RW005 M6U-LOCA-RW006
LOCA - Other than FW or GDCS	6 Unflooded	M6U-LOCA-OT005
LOCA - FW Line A	6 Unflooded	M6U-LOCA-FW003
LOCA - Instrument Line below TAF	6 Unflooded	M6U-LOCA-I005 M6U-LOCA-I006
LOCA - GDCS	6 Unflooded	M6U-LOCA-G005
LOCA - Instrument Line below TAF	6 Flooded	M6F-LOCA-I002
LOCA - RWCU/SDC below TAF	6 Flooded	M6F-LOCA-RW002
RPV Drain down (leak or diversion)	5	M5-RPVLEAK007 M5-RPVLEAK007A M5-RPVLEAK011 M5-RPVLEAK012 M5-RPVLEAK013 M5-RPVLEAK019 M5-RPVLEAK019A M5-RPVLEAK023 M5-RPVLEAK024 M5-RPVLEAK025 M5-RPVLEAK026

Table 16.6-5
Shutdown PRA Core Damage Sequences

Event Tree / Initiating Events	Mode	Core damage sequences
RPV Drain down (leak or diversion)	5 open	M5O-RPVLEAK006 M5O-RPVLEAK006A M5O-RPVLEAK010 M5O-RPVLEAK011 M5O-RPVLEAK012 M5O-RPVLEAK017 M5O-RPVLEAK017A M5O-RPVLEAK021 M5O-RPVLEAK022 M5O-RPVLEAK023 M5O-RPVLEAK024
RPV Drain down (leak or diversion)	6 Flooded	M6F-RPVLEAK004
RPV Drain down (leak or diversion)	6 Unflooded	M6U-RPVLEAK005 M6U-RPVLEAK009 M6U-RPVLEAK010
LOCA – RWCU Outside Containment	5	M5-RWCU-BOC006 M5-RWCU-BOC010 M5-RWCU-BOC011 M5-RWCU-BOC012 M5-RWCU-BOC018 M5-RWCU-BOC022 M5-RWCU-BOC023 M5-RWCU-BOC024 M5-RWCU-BOC025
LOCA – RWCU Outside Containment		M5O-RWCU-BOC005 M5O-RWCU-BOC009 M5O-RWCU-BOC010 M5O-RWCU-BOC011 M5O-RWCU-BOC016 M5O-RWCU-BOC020 M5O-RWCU-BOC021 M5O-RWCU-BOC022 M5O-RWCU-BOC023
LOCA – RWCU Outside Containment	6 Flooded	M6F-RWCU-BOC003

Table 16.6-5

Shutdown PRA Core Damage Sequences

Event Tree / Initiating Events	Mode	Core damage sequences
LOCA – RWCU Outside Containment	6 Unflooded	M6U-RWCU-BOC004 M6U-RWCU-BOC008 M6U-RWCU-BOC009

16.7 INSIGHTS FROM SHUTDOWN PRA

The greatest contribution to shutdown risk comes from breaks in lines connected to the vessel below TAF. In these cases, the lower drywell equipment hatch or personnel hatch is likely to be open to facilitate work in the lower drywell. Although the frequency of these events is very low, there is only one method for mitigation – manual closure of the hatch(es).

In order to minimize the risk from these scenarios, refueling outages must be conducted in a judicious manner. Whenever the hatches are open, procedures shall require personnel to be available and in close proximity to the hatches, with the purpose of providing fast closure of the containment in the event of a water leak. Other measures can be taken, including temporary installation of equipment to aid in closing the hatch or to minimize the flooding rate in the lower drywell.

LOCA events above the TAF do not contribute much at all to the entire overall shutdown CDF. The highest sequence for any LOCA above the fuel is three orders of magnitude below the highest cutset, and two orders of magnitude below the highest non-LOCA cutsets.

Maintaining the ability to promptly close the lower drywell hatch during outages is vital. Events associated with the hatch closure are in each of the top six (and eight of the top 16) shutdown cutsets and account for over 50% of the shutdown risk. In several LOCA scenarios, failure to close the hatch is assumed to lead directly to core damage.

Besides lower drywell LOCA events, RPV draindown events have the next largest impact on the shutdown PRA results. The significant cases for draindown events result in RWCU isolation due to the leak, followed by a failure to provide alternate decay heat removal. The highest contributing RPV draindown case is during Mode 6 Unflooded.

Shutdown risk is very closely related to outage duration. Most of the risk is included in cutsets with just an initiating event and one mitigating event. A longer or shorter outage will directly affect the risk one way or another. A 28 day outage is used in this analysis and is judged to be a best estimate approach. All scheduled refueling activity can be performed in much less time. Conversely, longer outages are certain at some point in the life of a plant. In these cases, it is assumed the lower drywell is closed and lower drywell related risk significantly reduced.

Only one running RWCU/SDC train is needed during Mode 5 to prevent boiling. This assumption is backed up by analysis. It is key for fire and flooding shutdown risk. With only one train needed, shutdown initiating events are reduced since both trains must be affected by the event and not just one.

With regard to the screening of drywell/containment fires that could result in loss of RWCU/SDC, the following insight based on the shutdown fire analysis in Section 12 is obtained:

- A fire in the lower drywell that damages all equipment in the area can significantly impact the CDF. These fires have been screened from the Fire PRA analysis. The area is inert during power operations. During shutdown, the screening is based on engineering judgment. The components that lead to the high risk significance are RWCU/SDC equipment and containment isolation valves. The judgment to screen this from analysis is based on the physical separation of the components, the limited number of ignition sources in the area, and the limited combustible material in the area.

16.8 CONCLUSIONS

The main conclusion that can be drawn from the ESBWR shutdown risk analysis is that the ESBWR design provides a robust, passive means for preventing shutdown core damage events and the results are well below the NRC goals for CDF and LRF:

	CDF	LRF
ESBWR Shutdown:	1.70E-08	1.70E-08 (assumes all events bypass containment)
Chapter 19 goals:	1.0E-4	1.0E-6

The key risk insights are:

- Shutdown process should provide assurance that the equipment and personnel hatches in the lower drywell can be isolated in the event of a leak.
- Operator and staff training ensures shutdown transient identification and mitigation is stressed. Few fully automated systems are credited in the shutdown transient response. Human action is key in preventing core damage.
- A fire in the lower drywell that damages all equipment in the area can significantly impact the CDF. These fires have been screened from the Fire PRA analysis. The area is inert during power operations. During shutdown, the screening is based on engineering judgment. The components that lead to the high risk significance are RWCU/SDC equipment and containment isolation valves. The judgment to screen this from analysis is based on the physical separation of the components, the limited number of ignition sources in the area, and the limited combustible material in the area.

16.9 REFERENCES

16-1 Evaluation of Potential Severe Accidents During Low Power and Shutdown Operations at Grand Gulf, Unit 1, NUREG/CR-6143, Vol. 2, Part 1 A, June 1994

16-2 Evaluation of Loss of Off-site Power Events at NPPs: 1980-1996, NUREG/CR-5496, November 1996

16-3 Residual Heat Removal Experience Review and Safety Analysis: Boiling Water Reactors, NSAC-88, March 1986

16-4 Residual Heat Removal Experience Review and Safety Analysis: Boiling Water Reactors, NSAC-157, June 1991

16-5 Operational Data Analysis of Shutdown and Low Power Licensee Event Reports, AEOD/S93-05, April 1993

16-6 Residual Heat Removal Experience Review and Safety Analysis: Pressurized Water Reactors, NSAC-52, January 1983

16-7 ABWR Standard Safety Analysis Report, 23A6100, August 1996

16-8 NEA/CSNI/R (2005) 11/Vol. 121-Sep-2005 "Improving Low Power and Shutdown PSA Methods and Data to Permit Better Risk Comparison and Trade-Off Decision-Making"/ Nuclear Energy Agency (NEA) - Committee on the Safety of Nuclear Installations

16-9 EPRI 1003113, An Analysis of Loss of Decay Heat Removal Trends and Initiating Event Frequencies (1989–2000)

17 RESULTS SUMMARY

Contents

17.1 Overview of Results and Insights 17.1-1
17.1.1 Objectives 17.1-1
17.1.2 Defining Significance 17.1-2
17.1.2.1 Background 17.1-2
17.1.2.2 ESBWR Risk Significance 17.1-3
17.1.3 ESBWR Key Operator Actions 17.1-4
17.2 At-Power Internal Events 17.2-1
17.2.1 Core Damage Sequences – At Power Internal Events 17.2-1
17.2.1.1 Significant Core Damage Sequences – At Power Internal Events 17.2-1
17.2.1.2 Significant Core Damage - At-Power Internal Initiating Events 17.2-3
17.2.1.3 Significant Functions, SSCs, and Operator Actions – At-Power Internal Events 17.2-3
17.2.2 Large Release Sequences –At Power Internal Events 17.2-4
17.2.2.1 Significant Large Release Sequences –At Power Internal Events 17.2-4
17.2.2.2 Significant Large Release - At-Power Internal Initiating Events 17.2-4
17.2.2.3 Significant Large Release Functions, SSCs, and Operator Actions –At-Power Internal Events 17.2-4
17.2.2.4 Containment Performance – At-Power Internal Events 17.2-5
17.2.3 Significant Offsite Consequences – At-Power Internal Events 17.2-5
17.2.4 Summary of Important Results and Insights – At-Power Internal Events 17.2-5
17.3 At-Power External Events 17.3-1
17.3.1 External Events - Fire 17.3-1
17.3.1.1 Significant Core Damage Sequences – Fire 17.3-1
17.3.1.2 Significant Initiating Events – Fire 17.3-1
17.3.1.3 Significant Functions, SSCs, and Operator Actions – Fire 17.3-1
17.3.1.4 Large Release Sequences – Fire 17.3-2
17.3.2 External Events - Flood 17.3-2
17.3.2.1 Significant Core Damage Sequences - Flood 17.3-2
17.3.2.2 Significant Initiating Events – Flood 17.3-2
17.3.2.3 Significant Functions, SSCs, and Operator Actions - Flood 17.3-2
17.3.2.4 Large Release Sequences – Flood 17.3-2
17.3.3 External Events – Wind 17.3-2
17.3.3.1 Significant Core Damage Sequences - Wind 17.3-2
17.3.3.2 Significant Initiating Events - Wind 17.3-3
17.3.3.3 Significant Functions, SSCs, and Operator Actions – Wind 17.3-3
17.3.3.4 Large Release Sequences – Wind 17.3-3
17.3.4 Summary of Important Results and Insights – At-Power External Events 17.3-3
17.4 Shutdown Internal Events 17.4-1
17.4.1 Significant Core Damage Sequences – Shutdown Internal Events 17.4-1

17.4.1.1 Initiating Events – Shutdown Internal Events 17.4-1
17.4.1.2 Component Reliability and Availability – Shutdown Internal Events..... 17.4-1
17.4.1.3 Operator Actions 17.4-1
17.4.2 Significant Large Release Sequences – Shutdown Internal Events..... 17.4-1
17.5 Shutdown External Events 17.5-1
17.5.1 Significant Core Damage Sequences 17.5-1
17.5.1.1 Initiating Events 17.5-1
17.5.1.2 Component Reliability and Availability 17.5-1
17.5.1.3 Operator Actions 17.5-1
17.5.2 Summary of Important Shutdown Results and Insights 17.5-1
17.6 Insights from Seismic Margins Analysis 17.6-1
17.6.1 Significant Core Damage Sequences 17.6-1
17.6.2 Significant Large Release Sequences 17.6-1
17.6.3 Significant Offsite Consequences 17.6-1
17.7 Summary of Important Results and Insights..... 17.7-1
17.8 References..... 17.8-1

List of Tables

Table 17.1-1 Results 17.1-5
Table 17.1-2 ESBWR Structures, Systems and Components That Are Risk Significant (DELETED) 17.1-6
Table 17.1-3 ESBWR Risk-Significant Operator Actions 17.1-7
Table 17.2-1 At-Power Internal Initiating Events 17.2-7
Table 17.2-2 At-Power Internal Events F-V Importance 17.2-8
Table 17.2-3 At-Power Internal Events RAW Importance 17.2-9
Table 17.2-4 At-Power Internal Events Common Cause Failures 17.2-11
Table 17.2-5 At-Power Internal Events Operator Actions **(DELETED)** 17.2-16
Table 17.7-1 Internal Events CDF At-Power Operator Actions - RAW 17.7-2
Table 17.7-2 Internal Events CDF At-Power Operator Actions - FV 17.7-5
Table 17.7-3 Internal Events LRF At-Power Operator Actions - RAW 17.7-8
Table 17.7-4 Internal Events LRF At-Power Operator Actions - FV 17.7-10
Table 17.7-5 Internal Events CDF & LRF Shutdown Operator Actions - RAW 17.7-12
Table 17.7-6 Internal Events CDF & LRF Shutdown Operator Actions - FV 17.7-15
Table 17.7-7 Fire CDF At-Power Operator Actions - RAW 17.7-18
Table 17.7-8 Fire CDF At-Power Operator Actions - FV 17.7-21
Table 17.7-9 Fire LRFAt-Power Operator Actions - RAW 17.7-24
Table 17.7-10 Fire LRF At-Power Operator Actions - FV 17.7-27
Table 17.7-11 Flood CDF At-Power Operator Actions - RAW 17.7-30
Table 17.7-12 Flood CDF At-Power Operator Actions - FV 17.7-33
Table 17.7-13 Flood LRF At-Power Operator Actions - RAW 17.7-36
Table 17.7-14 Flood LRF At-Power Operator Actions - FV 17.7-39
Table 17.7-15 High Wind CDF At-Power Operator Actions - RAW 17.7-42
Table 17.7-16 High Wind CDF At-Power Operator Actions - FV 17.7-44
Table 17.7-17 High Wind LRF At-Power Operator Actions - RAW 17.7-46
Table 17.7-18 High Wind LRF At-Power Operator Actions - FV 17.7-48
Table 17.7-19 Fire CDF & LRF Shutdown Operator Actions - RAW 17.7-50
Table 17.7-20 Fire CDF & LRF Shutdown Operator Actions - FV 17.7-52
Table 17.7-21 Flood CDF & LRF Shutdown Operator Actions - RAW 17.7-54
Table 17.7-22 Flood CDF & LRF Shutdown Operator Actions - FV 17.7-55
Table 17.7-23 High Winds CDF & LRF Shutdown Operator Actions - RAW 17.7-56
Table 17.7-24 High Winds CDF & LRF Shutdown Operator Actions - FV 17.7-58

17 RESULTS SUMMARY

17.1 OVERVIEW OF RESULTS AND INSIGHTS

The objectives of Sections 17, 18 and 19 are to provide insights about the design of the ESBWR, and to ensure that PRA modeling assumptions are preserved such that they remain valid for plants referencing the certified design. Sections 17, 18 and 19 follow an integrated approach to analyzing the PRA results. The PRA results encompass the entire quantified risk profile, which includes internal and external events (seismic events are treated separately in a margins analysis), severe accident progression analysis, and offsite consequence analysis for at-power and shutdown operating conditions. Risk-significant insights and assumptions are identified from the systematic evaluations of Sections 17 and 18. The significant results and assumptions are assigned to one of three categories: Operational Program, Design Requirement, or PRA Insight.

Operational programs include operator actions that are considered to be significant. These are summarized in Table 17.1-3, and they are incorporated into the Human Factors Engineering process.

Design requirements capture key PRA system modeling information. In most cases, the system models are based upon actual design features, as described in the DCD. However, some design information has not yet been developed. This information is treated as design assumptions, and must be preserved to ensure that the PRA model reflects the to-be-built plant. Design Requirements are listed in Table 18-1.

PRA insights are retained within the design engineering organization. These are key insights that describe significant aspects of the PRA model or results. PRA insights can be consulted in PRA model updates, risk-informed applications, and expert panel applications. PRA insights are listed in Table 18-1.

The objective of Section 19 is to develop preventive maintenance recommendations for risk-significant components. The recommendations are based on generic information and are used to demonstrate the ability to ensure that the assumptions in the PRA model relative to the reliability of components can be preserved throughout the operating life of the plant.

17.1.1 Objectives

Section 17 compiles the quantification results of the PRA models to identify the dominating contributions to the overall risk profile and includes insights from the seismic margins analysis. These results are evaluated to identify features that are responsible for maintaining low risk, and those that perform significant mitigation functions. Such analyses provide important information about:

(1) Areas where certain design features are the most effective in reducing risk with respect to the design of operating reactors;

(2) Major contributors to risk, such as hardware failures and human errors;

(3) Major contributors to maintaining the “built-in” plant safety and ensuring that the risk does not increase unacceptably;

(4) Major contributors to the uncertainty associated with the risk estimates; and

(5) Sensitivity of risk estimates to uncertainties associated with failure data, assumptions made in the PRA models, lack of modeling details in certain areas, and previously raised issues. The evaluations account for uncertainties in parameters, along with sensitivity studies to ensure that the PRA parameters are a reasonable representation of the design and operation of the ESBWR.

The following subsections contain the significant results and insights of the comprehensive ESBWR PRA. This information is used in an expert panel process to identify risk-significant SSCs that are part of the Reliability Assurance Program described in DCD Tier 2 Section 17.4. Table 17.1-1 is a summary of the CDF and LRF results for each quantification. NEDO-33411 , Risk Significance of Structures, Systems and Components For the Design Phase of the ESBWR, contains the basic events from the ESBWR PRA models that are considered risk-significant based on the criteria discussed above. Table 17.1-3 is a list of risk-significant operator actions.

17.1.2 Defining Significance

17.1.2.1 Background

PRA results can be classified as dominant or significant relative to a particular point of reference. While dominant risk contributors are identified relative to a specific measure, such as an accident sequence, risk-significance is defined relative to the NRC Safety Goals. In order to determine the thresholds for risk significance, the ASME Standard for Probabilistic Risk Assessment for Nuclear Power Plant Applications (Reference 17-1) provides the following definitions for significance:

- Significant Basic Event - A basic event that has an F-V importance greater than 0.005 or a RAW importance greater than 2.
- Significant Cutset - One of the set of cutsets that, when rank-ordered by decreasing frequency, aggregate to a specified percentage of the CDF (or LRF), or that individually contribute more than a specified percentage of CDF (or LRF).

For the significant cutset threshold, the ASME standard recommends an aggregate percentage of 95% and an individual percentage of 1%. Cutset significance may be measured relative to overall CDF (or LRF) or relative to an individual accident sequence CDF (or LRF.)

Additionally, the ASME standard defines significance on a broader scale:

- Significant Accident Sequence - One of the set of accident sequences, defined at the functional or systemic level, that, when rank-ordered by decreasing frequency, aggregate to a specified percentage of the CDF, or that individually contributes more than a specified percentage of CDF.
- Significant Accident Progression Sequence - One of the set of accident sequences, contributing to large release frequency that, when rank-ordered by decreasing frequency, aggregate to a specified percentage of the LRF, or that individually contribute more than a specified percentage of LRF.
- Significant Containment Challenge - A containment challenge that results in a containment failure mode that is represented in a significant accident progression sequence.

For the accident sequences, the specified percentage that the ASME standard recommends is an aggregate percentage of 95% and an individual percentage of 1%.

The risk thresholds that are recommended by the ASME standard provide a reasonable point of reference for existing plants, whose internal events CDF values range from roughly 1 E-4/year to 1 E-6/year. However, some of the advanced LWR CDF values are more than two orders of magnitude lower. Applying the current recommended risk thresholds is not reasonable because it represents risk that is substantially lower than the safety goals. For example, for an advanced BWR with an at-power internal events CDF of 2E-8/year using a RAW importance of 2 as a threshold for risk significance would lead one to conclude that changes in CDF of 2 E-8/year are risk significant. This is clearly an unreasonable threshold for determining risk significance.

If the ASME standard for a significant cutset (aggregate 95 percent of the CDF and individual 1%) is used for the ESBWR internal events PRA, then over 19,000 cutsets would be significant. The contribution of cutset number 19,902, which aggregates to 95%, is 3.12E-14/year, which is an individual contribution of 0.0002%. In other words, virtually every event would be significant, relative to a safety goal of 1E-4/year including cutsets whose individual contributions are statistically insignificant.

17.1.2.2 ESBWR Risk Significance

The criteria for categorization into low and high significance are related to the RG 1.174 (Reference 17-2) acceptance criteria for changes in CDF and LERF, which is equivalent to LRF for the purpose of this analysis. Thus, the risk significance criteria are a function of the base case CDF and LERF rather than being fixed for all plants. The RG 1.174 acceptance criteria for CDF and LERF relate changes in risk to baseline risk. For example, a change in CDF of < 1E-6/year is considered to be not risk significant for a plant with a baseline CDF of < 1E-5/year. The LERF criteria are one order of magnitude lower.

Risk significance for the ESBWR is thus defined in terms of risk increase (RAW) and risk contribution (F-V). An increase in CDF risk of greater than or equal to 1E-7/year is considered risk significant for the design certification ESBWR PRA. This is clearly below the Region III limit in Figures 3 and 4 of RG 1.174, that is, the lowest level of regulatory concern. The upper limit of Region III is 1E-6/year for CDF changes. This significant margin is considered sufficient to address potential cumulative effects. Thus, a CDF increase of 1E-7/year relative to the internal events CDF of 1.68E-8/year would yield a RAW value of (1.17 E-7 / 1.68E-8) = 7.0. An individual contribution of 1E-9/year is considered to conservatively represent the threshold for risk contribution. This translates to an F-V value of (1E-9 / 1.68E-8) = 0.06

For the purpose of this section, the following conservative thresholds are used to identify potentially risk-significant information:

- F-V greater than or equal to 0.01;
- RAW greater than or equal to 5.0 for individual events; and
- RAW greater than or equal to 50 for common cause failures.

17.1.3 ESBWR Key Operator Actions

Table 17.1-3 lists risk-significant operator actions based on the results in Section 17.7. In addition, several operator actions are considered as key operator actions that are qualified as key risk insights besides the fact that they are incorporated into the Human Factors Engineering process.

Key operator actions have a significant effect on risk. In this case, any operator action whose failure contributes greater than or equal to 10% of the NRC safety goals is considered to be a key operator action. The limiting case is the LRF goal of less than or equal to 1E-7/year. The delta LRF (DLRF) values are calculated as "(RAW – 1) * Baseline LRF" for each PRA model. The maximum DLRF values from all the models are included in Table 17.1-3. The operator actions with maximum DLRF values greater than or equal to 1E-7/year are considered as key.

Table 17.1-1

Results

	Internal Events	**Fire**	**Flood**	**High Winds**
At-Power CDF	1.68E-08	1.25E-08	6.95E-09	8.51E-09
Shutdown CDF	1.70E-08	9.56E-09	5.21E-09	3.95E-08
At-Power LRF	1.39E-09	1.56E-09	4.09E-09	1.24E-09
Shutdown LRF	1.70E-08	9.56E-09	5.21E-09	3.95E-08

Table 17.1-2

ESBWR Structures, Systems and Components That Are Risk Significant (DELETED)

Table 17.1-3

ESBWR Risk-Significant Operator Actions

NAME	DESCRIPTION	MAX DLRF	KEY OPERATOR ACTION
XXX-XHE-FO-LPMAKEUP	OP. FAILS TO RECOG. NEED FOR LOW PRESS. MAKEUP AFTER DEPRESSURIZATION	1.16E-06	YES
DWH-2 (NOTE 1)	CLOSE THE LOWER DRYWELL HATCH – INSTRUMENT LINE LOCA	6.55E-07	YES
XXX-XHE-FO-ICPCCS	OPERATOR FAILS TO RECOGNIZE THE NEED TO MAKEUP ICS/PCCS POOL LEVEL.	1.30E-07	YES
U43-XHE-FO-LPCI	OPERATOR FAILS TO ACTUATE U43 IN LPCI MODE	1.08E-07	(NOTE 2)
R21-XHE-FO-ADG	OPERATOR FAILS TO CONTROL THE LOADS ON ANCILLARY DG BUSES	8.49E-08	
C12-XHE-FO-LEVEL2	OPERATOR FAILS TO BACK-UP CRD ACTUATION	5.97E-08	
DWH-1 (NOTE 1)	CLOSE THE LOWER DRYWELL HATCH – RWCU/SDC DRAIN LINE LOCA	1.80E-08	
R-M5-G31 (NOTE 1)	RWCU/SDC RECOVERY IN MODE 5	1.31E-08	
P21-TRN-RE-HX1A	FAILURE TO RESTORE RCCW TRAIN 1A HX	1.30E-08	
P21-TRN-RE-HX2A	FAILURE TO RESTORE RCCW TRAIN 2A HX	1.30E-08	
P21-TRN-RE-HX3A	FAILURE TO RESTORE RCCW TRAIN 3A HX	1.30E-08	
P21-TRN-RE-PUMP1A	FAILURE TO RESTORE RCCW TRAIN 1A PUMP	1.30E-08	
P21-TRN-RE-PUMP2A	FAILURE TO RESTORE RCCW TRAIN 2A PUMP	1.30E-08	
P21-TRN-RE-PUMP3A	FAILURE TO RESTORE RCCW TRAIN 3A PUMP	1.30E-08	
C12-BV_-RE-F018A	MISPOSITION OF VALVE F018A	1.26E-08	
C12-BV_-RE-F021A	MISPOSITION OF VALVE F021A	1.26E-08	
C12-BV_-RE-F003B	MISPOSITION OF VALVE F003B	1.22E-08	
C12-BV_-RE-F018B	MISPOSITION OF VALVE FO18B	1.22E-08	
C12-BV_-RE-F021B	MISPOSITION OF VALVE F021B	1.22E-08	
R21-TRN-RE-FOADGA	FAILURE TO RESTORE FUEL OIL TRANSFER TRAIN FOR ADG-A	1.15E-08	
C71-XHE-FO-SCRAM	OPERATOR FAILS TO PERFORM MANUAL SCRAM	1.04E-08	
C12-BV_-RE-F064	MISPOSITION OF OPEN VALVE F064	1.04E-08	
R21-TRN-RE-FOADGB	FAILURE TO RESTORE FUEL OIL TRANSFER TRAIN FOR ADG-A	1.03E-08	
R-M5-LOPP (NOTE 1)	OFFSITE POWER RECOVERY IN MODE 5 (INCLUDING MODE 5 AND MODE 5 OPEN)	8.50E-09	

Table 17.1-3

ESBWR Risk-Significant Operator Actions

NAME	DESCRIPTION	MAX DLRF	KEY OPERATOR ACTION
C12-BV_-RE-F013A	MISPOSITION OF VALVE F013A	5.83E-09	
C12-BV_-RE-F013B	MISPOSITION OF VALVE F013B	5.83E-09	
C12-BV_-RE-F015A	MISPOSITION OF VALVE F015A	5.83E-09	
C12-BV_-RE-F015B	MISPOSITION OF VALVE F015B	5.83E-09	
LEAK-ISO (NOTE 1)	OPERATORS IDENTIFY AND ISOLATE RWCU/SDC LEAK	5.10E-09	
R-M6-G31 (NOTE 1)	RWCU/SDC RECOVERY IN MODE 6	4.74E-09	
R13-XHE-FO-ADG	OPERATOR FAILS TO ALIGN THE ADG BUSES TO UPS BUSES	3.84E-09	
R-M6-LOPP (NOTE 1)	OFFSITE POWER RECOVERY IN MODE 6	3.74E-09	
U43-XHE-FO-MAKEUP	OPERATOR FAILS TO ACTUATE U43 IN MAKE UP MODE	2.64E-09	
P51-XHE-P21-BU	OPERATOR ACTION TO CONNECT ALTERNATE COOLING GIVEN RCCW FAILED	2.37E-09	
U43-XHE-FO-PMPTRK	OPERATOR FAIL TO SUPPLY WATER FROM PUMP TRUCKS	1.79E-09	
B32-XHE-FO-VENT	OPERATOR FAILS TO OPEN VENT	1.53E-09	
E50-XHE-FO-DLTR2	OPERATOR FAILS TO ENABLE TRAIN 2	1.26E-09	
XXX-XHE-FO-DEPRESS	OPERATOR FAILS TO RECOGNIZE NEED OF DEPRESSURIZATION	1.64E-10	
N21-XHE-FO-FWRERUN	OPERATOR FAILS TO RESTART FDW AFTER RUNBACK - ATWS	4.09E-11	

Notes:

(1) These shutdown recovery events are modeled as special events in the shutdown PRA event trees, which then are not documented in the Section 17.7 tables. However, these special events by nature mainly consist of operator actions. A key risk insight in Section 16 has also been generated based on the sensitivity studies, which is consistent with the insights obtained from this table. Therefore, these events are listed in this table for completeness.

(2) Basic event U43-XHE-FO-LPCI's RAW value for shutdown high wind model (see Table 17.7-23) is below 5 although its DLRF is above 1.0E-7 /year. Because of the conservatism associated with the shutdown high wind model, this event is not listed as key operator actions.

17.2 AT-POWER INTERNAL EVENTS

This subsection contains the majority of the results and discussions. The at-power internal events PRA is the most highly developed analysis and involves SSCs and operator actions that are most prevalent for operating reactors. This model tends to provide the most comprehensive lists of CDF and LRF insights. As such, most of the results, dominant contributors, and insights are derived from this analysis. The other analyses are compared against the at-power internal events analysis to identify additional significant results.

17.2.1 Core Damage Sequences – At Power Internal Events

17.2.1.1 Significant Core Damage Sequences – At Power Internal Events

The CDF for at-power internal events is 1.68 E-8/year. The top ten at-power internal event sequences are described below, on a functional level. This distillation of the PRA accident sequences is the important insights that represent the behavior of the ESBWR design in response to postulated accidents.

(3) AT-T-GEN023

General Transient with ATWS

Scram fails

SLCS fails

(4) T-IORV063

Inadvertent Opening of a Relief Valve

Scram is successful

High Pressure Injection fails

Depressurization is successful

Low Pressure Injection fails

(5) T-IORV065

Inadvertent Opening of a Relief Valve

Scram is successful

High Pressure Injection fails

Depressurization fails

(6) ML-L017

Medium Liquid LOCA

Scram is successful

Vacuum Breakers Pressure Suppression is successful

Depressurization is successful (via automatic depressurization using DPVs)

Low Pressure Injection fails

(7) AT-T-GEN021

General Transient with ATWS

Scram fails

One or more SRVs sticks open

Failure to maintain RPV water level

(8) ML-L019

Medium Liquid LOCA

Scram is successful

Vacuum Breakers Pressure Suppression is successful

Depressurization is successful (via manual depressurization using SRVs)

Low Pressure Injection fails

(9) ML-L020

Medium Liquid LOCA

Scram is successful

Vacuum Breakers Pressure Suppression is successful

Depressurization fails

(10) SL-S023

Small Steam LOCA

Scram is successful

Vacuum Breakers Pressure Suppression is successful

Depressurization is successful

Low Pressure Injection fails

CRD Injection fails

(11) SL-L024

Small Liquid LOCA

Scram is successful

Isolation Condensers are successful

Depressurization is successful

Vacuum Breakers Pressure Suppression is successful

Low Pressure Injection fails

CRD Injection fails

(12) T-LOPP061

Loss of Preferred Power

Scram is successful

Isolation Condensers fail

SRV Open and Reclosure is successful

Depressurization fails

CRD Injection fails

The dominant sequences typically do not contain independent component failures. Instead, they consist of common cause failures that disable entire mitigating functions. And, it is important to note that multiple mitigating functions must fail in the dominant sequences, so a single common cause event is insufficient to directly result in core damage. The ATWS sequences are dominated by an assumed failure of the control rods to insert into the core due to mechanical binding. Core damage in ATWS accident sequences results from the inability to maintain a lowered RPV water level prior to achieving subcriticality.

17.2.1.2 Significant Core Damage - At-Power Internal Initiating Events

Table 17.2-1 identifies the top initiating events as:

(1) %T-IORV, Inadvertent Opening of a Safety Relief Valve;

(2) %T-GEN, General Transient;

(3) %ML-L, Medium Liquid LOCA;

(4) %SL-S, Small Steam LOCA;

(5) %SL-L, Small Liquid LOCA; and

(6) %T-LOPP-GR, Grid-Related Loss of Preferred Power.

The initiating event frequency for %T-IORV considers the likelihood of a stuck open Safety/Relief Valve (SRV), an inadvertent opening or closing of an SRV, and the spurious opening of two vent valves in series from the Isolation Condensers to the suppression pool. ESBWR relief valve lifting after transient is less likely due to the ability of ICS to maintain the reactor at high pressure conditions without reaching the SRV relief setpoints. This frequency is conservative because transient-induced stuck open SRVs are handled in the event trees following a transient initiating event. A lower frequency could be justified; however, there are no risk-significant insights identified. As discussed in Section 2, the initiating event frequencies for %T-GEN and %T-LOPP-GR are applied using industry operating experience data. ESBWR values are expected to be lower. LOCA frequencies (%ML-L, %SL-S and %SL-L) are also applied using operating experience data. Overall, none of the dominant initiating events is considered to have unique risk insights.

17.2.1.3 Significant Functions, SSCs, and Operator Actions – At-Power Internal Events

Tables 17.2-2 through 17.2-4 list the significant components for at-power internal events. The F-V importance values in Table 17.2-2 are low, which indicates that the risk profile is balanced

and does not contain dominating contributors to risk. The most important systems, based on RAW importance values, are the 6.9 kV AC PIP buses. Loss of a PIP bus during at-power operation would result in a plant trip and loss of one division of active mitigation systems. Other important components include SLCS valves and accumulators. These findings are consistent with the top accident sequences discussed in Subsection 17.2.1. The top common cause failures are the mechanical binding of control rods, nonsafety-related UPS transformers, wetwell to drywell vacuum breakers, RPS scram valves, depressurization squib valves, and GDCS check valves and squib valves, feedwater line check valves, and digital I&C software. These common cause failures correspond to failures of RPS, passive functions or multiple injection functions. In each case, at least one diverse backup system is available.

A sensitivity study in Section 11 evaluates the risk importance values on a system level.

Table 17.1-3 shows a list of important operator actions based on all model results. Tables 17.7-1 and 17.7-2 show the important operator actions based on at-power internal events CDF model results. The important operator actions involve recognizing the need to makeup ICS/PCCS Pool level; recognizing the need for depressurization or providing low pressure injection in particular scenarios; failure to restart feedwater pumps during certain ATWS scenarios; failure to open 6 out of 10 SRVs; and pre-initiator valve mispositioning events in the FAPCS, CRD, and RCCW systems. Information on important operator actions is incorporated into the human factors engineering program.

17.2.2 Large Release Sequences –At Power Internal Events

The at-power internal events large release frequency (LRF) is 1.39E-9/year.

17.2.2.1 Significant Large Release Sequences –At Power Internal Events

The most important release sequences are core damage sequences that challenge the containment but only result in controlled releases (i.e., not “large releases”). They are Medium Liquid LOCA events followed by a loss of low-pressure injection. The most important “large release” sequences are not risk significant because their frequencies are significantly lower than the NRC Safety Goals. They are initiated by LOCAs and they result in conservatively postulated ex-vessel explosion scenarios that lead to containment failure.

17.2.2.2 Significant Large Release - At-Power Internal Initiating Events

The most important large release initiating events are %ML-L and %LL-S-FDWB, which represent a Medium Liquid LOCA and a Large LOCA in Feedwater Line B. This is due to the impact the LOCAs have on mitigating functions that become disabled. Note that the large release contributions from initiating events %LL-S-FDWA and %LL-S-FDWB should be combined since the asymmetry in their risk significance is introduced partially by the default system alignments. However, the combined large release contribution from both Feedwater Line LOCA events is still much lower than the medium liquid LOCA.

17.2.2.3 Significant Large Release Functions, SSCs, and Operator Actions –At-Power Internal Events

The most important systems and components that are unique to large release sequences are the RWCU/SDC isolation valves and the BiMAC device.

The following large release basic events are most significant based on the FV and RAW criteria:

- Cross-connection valve failures for IC/PCC pools, vacuum breaker leakage failures, check valve failures on the common injection paths for (feedwater, RWCU/SDC, FAPCS or CRD), and pump or valves failures that result in loss of dedicated low pressure injection;
- Common Cause Failures of vacuum breaker, control rods, PCCS heat exchangers and filters, DPVs and GDCS squib valves nonsafety-related UPS transformers, inverters, batteries and software failures.

Table 17.1-3 shows a list of important operator actions based on all model results. Tables 17.7-3 and 17.7-4 show the important operator actions based on at-power internal events LRF model results. The important operator actions involve recognizing the need to makeup ICS/PCCS Pool level and recognizing the need for depressurization or providing low-pressure injection in particular scenarios.

17.2.2.4 Containment Performance – At-Power Internal Events

The potential for containment failure due to combustible gas generation, containment bypass and overpressurization was evaluated. In addition, the frequency of containment failure events due to the phenomenological events discussed in Section 21 (CCIW, CCID, DCH, EVE) was determined. Because of the ESBWR design and reliability of containment systems, the most likely containment response to a severe accident is associated with successful containment isolation, vapor suppression and containment heat removal. As a result, the containment provides a highly reliable barrier to the release of fission products after a severe accident, with the dominant release category being that defined by Technical Specification leakage (TSL).

A containment penetration screening evaluation indicated that there are only a few penetrations that required isolation to prevent significant offsite consequences. All potential leakage paths feature multiple containment isolation valves. Thus, the probability of the bypass failure mode is dominated by common cause hardware failures, resulting in a calculated frequency of containment bypass about three orders of magnitude lower than the TSL release category.

The conditional containment failure probability is 8.2%, which meets the recommended goal of less than 10%.

17.2.3 Significant Offsite Consequences – At-Power Internal Events

The Level 3 results indicate that the offsite consequences due to internal at-power events are negligible. The estimated offsite consequences due to both internal and external events under both at-power and shutdown conditions are less than the defined individual, societal, and radiation dose limits.

17.2.4 Summary of Important Results and Insights – At-Power Internal Events

The dominant sequences typically do not contain multiple independent component failures. Instead, they consist of common cause failures that disable entire mitigating functions. And, it is important to note that multiple mitigating functions must fail in the dominant sequences, so a single common cause event is insufficient to directly result in core damage. The ATWS sequences are dominated by an assumed failure of the control rods to insert into the core due to

mechanical binding. Core damage in ATWS accident sequences results from the inability to maintain a lowered RPV water level prior to achieving subcriticality.

Important operator actions in the dominant accident sequences involve recognizing the need to makeup ICS/PCCS Pool level, recognizing the need for depressurization or providing low pressure injection.

Table 17.2-1

At-Power Internal Initiating Events

	Sequence Designator	Description	% CDF	Cumulative
1	%T-IORV	IORV	21.9%	21.90%
2	%T-GEN	GENERAL TRANSIENT	19.1%	41.00%
3	%ML-L	MEDIUM LIQUID LOCA	15.1%	56.10%
4	%SL-S	SMALL STEAM LOCA (NO RWCU BREAK)	12.2%	68.30%
5	%SL-L	SMALL LIQUID LOCA (NO RWCU BREAK)	8.0%	76.33%
6	%T-LOPP-GR	GRID RELATED LOSS OF PREFERRED POWER	5.4%	81.68%
7	%T-FDW	LOSS OF FEEDWATER	4.5%	86.16%
8	%T-PCS	TRANSIENT WITH PCS UNAVAILABLE	3.2%	89.31%
9	%T-LOPP-SC	SWITCHYARD CENTERED LOSS OF PREFERRED POWER	2.9%	92.23%
10	%LL-S	LARGE STEAM LOCA (NO FW LINE BREAK)	2.5%	94.69%
11	%T-LOPP-WR	WEATHER RELATED LOSS OF PREFERRED POWER	1.3%	96.00%

Table 17.2-2

At-Power Internal Events F-V Importance

Event Name	Fus Ves	Description
C12-MOV-CC-F023	3.60E-02	MOTOR OPERATED VALVE F023 FAILS TO OPEN
C12-MOV-OO-F024	3.60E-02	MOTOR OPERATED VALVE F024 FAILS TO CLOSE
C12-MOV-OO-F062A	3.60E-02	MOTOR OPERATED VALVE F062A FAILS TO CLOSE
C12-MOV-OO-F062B	3.60E-02	MOTOR OPERATED VALVE F062B FAILS TO CLOSE
R21-DG_-FR-DGA	2.90E-02	DIESEL GENERATOR "A" FAILS TO RUN GIVEN START
R21-DG_-FR-DGB	2.89E-02	DIESEL GENERATOR "B" FAILS TO RUN GIVEN START
C41-UV_-CC-F004A	1.88E-02	CHECK VALVE F004A FAILS TO OPEN
C41-UV_-CC-F004B	1.88E-02	CHECK VALVE F004B FAILS TO OPEN
C41-UV_-CC-F005A	1.88E-02	CHECK VALVE F005A FAILS TO OPEN
C41-UV_-CC-F005B	1.88E-02	CHECK VALVE F005B FAILS TO OPEN
C12-ACV-OO-F012	1.80E-02	AIR OPERATED VALVE F012 FAILS TO CLOSE
C12-ACV-OO-F030	1.80E-02	AIR OPERATED VALVE F030 FAILS TO CLOSE

Table 17.2-3

At-Power Internal Events RAW Importance

Event Name	Ach W	Description
R11-BAC-LP-100A3	100.2	6.9 KV AC PIP-A LOADS BUS 1000A3 FAILS DURING OPERATION
C41-BV_-OC-F001A	24.53	MAINTENANCE VALVE F001A PLUGS/TRANSFERS CLOSED
C41-BV_-OC-F001B	24.53	MAINTENANCE VALVE F001B PLUGS/TRANSFERS CLOSED
C41-BV_-OC-F006A	24.53	MAINTENANCE VALVE F006A PLUGS/TRANSFERS CLOSED
C41-BV_-OC-F006B	24.53	MAINTENANCE VALVE F006B PLUGS/TRANSFERS CLOSED
C41-ACV-OC-F002A	24.52	AIR OPERATED VALVE F002A FAILS TO REMAIN OPEN
C41-ACV-OC-F002B	24.52	AIR OPERATED VALVE F002B FAILS TO REMAIN OPEN
C41-ACV-OC-F002C	24.52	AIR OPERATED VALVE F002C FAILS TO REMAIN OPEN
C41-ACV-OC-F002D	24.52	AIR OPERATED VALVE F002D FAILS TO REMAIN OPEN
C41-UV_-CC-F004A	24.51	CHECK VALVE F004A FAILS TO OPEN
C41-UV_-CC-F004B	24.51	CHECK VALVE F004B FAILS TO OPEN
C41-UV_-CC-F005A	24.51	CHECK VALVE F005A FAILS TO OPEN
C41-UV_-CC-F005B	24.51	CHECK VALVE F005B FAILS TO OPEN
C41-TNK-RP-A001A	24.5	ACCUMULATOR A001A FAILS CATASTROPHICALLY
C41-TNK-RP-A001B	24.5	ACCUMULATOR A001B FAILS CATASTROPHICALLY
R11-BAC-LP-100B3	11.76	6.9 KV AC PIP-A LOADS BUS 1000B3 FAILS DURING OPERATION
C12-ACV-OO-F012	9.96	AIR OPERATED VALVE F012 FAILS TO CLOSE
C12-ACV-OO-F030	9.96	AIR OPERATED VALVE F030 FAILS TO CLOSE
C12-MOV-CC-F023	9.96	MOTOR OPERATED VALVE F023 FAILS TO OPEN
C12-MOV-OO-F024	9.96	MOTOR OPERATED VALVE F024 FAILS TO CLOSE
C12-MOV-OO-F062A	9.96	MOTOR OPERATED VALVE F062A FAILS TO CLOSE
C12-MOV-OO-F062B	9.96	MOTOR OPERATED VALVE F062B FAILS TO CLOSE
B21-UV_-CC-F102B	9.91	CHECK VALVE F102B FAILS TO OPEN
B21-UV_-CC-F111B	9.91	CHECK VALVE F111B FAILS TO OPEN
C12-UV_-CC-F022	9.77	CHECK VALVE F022 FAILS TO OPEN
B21-ACV-OC-F111B	9.64	AIR-TESTABLE CHECK VALVE F111B FAILS TO REMAIN OPEN
R12-XFL-LP-XA2-02A	9.42	R12-A2-02A XMFR FROM PIP BUS 1000A3 FAILS TO OPERATE
R12-XFL-LP-XB2-02B	9.4	R12-B2-02B XMFR FROM PIP BUS 1000B3 FAILS TO OPERATE

Table 17.2-3

At-Power Internal Events RAW Importance

Event Name	Ach W	Description
R12-LCB-CO-BOA2-02A	9.39	R12-A2-02A XMFR OUTPUT CIRCUIT BREAKER TO BUS R12-A2-02A OPEN SPURIOUSLY
R12-MCB-CO-BIA2-02A	9.39	R12-A2-02A XMFR INPUT CIRCUIT BREAKER FROM PIP BUS 1000A3 OPENS SPURIOUSLY
C12-MOV-CO-F024	9.38	MOTOR OPERATED VALVE F024 FAILS TO REMAIN CLOSED
C12-MOV-CO-F062A	9.38	MOTOR OPERATED VALVE F062A FAILS TO REMAIN CLOSE
C12-MOV-CO-F062B	9.38	MOTOR OPERATED VALVE F062B FAILS TO REMAIN CLOSED
R12-LCB-CO-BOB2-02B	9.38	R12-B2-02B XMFR OUTPUT CIRCUIT BREAKER TO BUS R12-B2-02B OPEN SPURIOUSLY
R12-MCB-CO-BIB2-02B	9.38	R12-B2-02B XMFR INPUT CIRCUIT BREAKER FROM PIP BUS 1000B3 OPENS SPURIOUSLY
B21-UV_-OC-F102B	9.15	CHECK VALVE F102B FAILS TO REMAIN OPEN
R12-BAC-LP-A2-02A	9.07	480 VAC BUS A2-02A FAILS DURING OPERATION
C12-UV_-OC-F022	9.05	CHECK VALVE F022 FAILS TO REMAIN OPEN
R12-BAC-LP-B2-02B	9.05	480 VAC BUS B2-02B FAILS DURING OPERATION
C12-MOV-OC-F023	8.95	MOTOR OPERATED VALVE F023 FAILS TO REMAIN OPEN
B32-HX_-PG-HX001A	8.85	Heat Exchanger HX001A Plugs
B32-HX_-PG-HX001B	8.85	Heat Exchanger HX001B Plugs
B32-HX_-PG-HX001C	8.85	Heat Exchanger HX001C Plugs
B32-HX_-PG-HX001D	8.85	Heat Exchanger HX001D Plugs
B32-HX_-PG-HX002A	8.85	Heat Exchanger HX002A Plugs
B32-HX_-PG-HX002B	8.85	Heat Exchanger HX002B Plugs
B32-HX_-PG-HX002C	8.85	Heat Exchanger HX002A Plugs
B32-HX_-PG-HX002D	8.85	Heat Exchanger HX002D Plugs
P30-TNK-RP-A001	8.13	CONDENSATE STORAGE TANK LEAKS CATASTROPHICALLY
C12-ACV-CO-F012	7.71	AIR OPERATED VALVE F012 FAILS TO REMAIN CLOSED
C12-ACV-CO-F030	7.71	AIR OPERATED VALVE F030 FAILS TO REMAIN CLOSED

Table 17.2-4

At-Power Internal Events Common Cause Failures

EVENT NAME	ACH W	DESCRIPTION
C12-ROD-CF-SCRAM	1.13E+06	CCF OF CONTROL RODS TO INSERT
R13-XFL-LP-CCFNSR2_ALL	1.61E+04	CCF OF ALL COMPONENTS IN GROUP 'R13-XFL-LP-CCFNSR2'
R13-XFL-LP-CCFNSR2_1_2_3	1.44E+04	CCF OF THREE COMPONENTS: R13-XFL-LP-R13CBA & R13-XFL-LP-R13CBB & R13-XFL-LP-R13C
T10-VB_-CC_1_2_3	7.01E+03	CCF OF THREE COMPONENTS: T10-VB_-CC-VB1 & T10-VB_-CC-VB2 & T10-VB_-CC-VB3
C12-ACV-CC-SCRV126	5.28E+03	CCF TO OPEN OF AIR OPERATED SCRAM VALVE AOV-126
B21-SQV-CC_ALL	2.31E+03	CCF OF ALL COMPONENTS IN GROUP 'B21-SQV-CC'
E50-SQV-CC-INJ_ALL	1.84E+03	CCF OF ALL COMPONENTS IN GROUP 'E50-SQV-CC-INJ'
E50-UV_-CC-INJ_ALL	1.80E+03	CCF OF ALL COMPONENTS IN GROUP 'E50-UV_-CC-INJ'
R13-XFL-LP-CCFNSR2_6_7_8	1.39E+03	CCF OF THREE COMPONENTS: R13-XFL-LP-R13RBA & R13-XFL-LP-R13RBB & R13-XFL-LP-R13R
B21-UV_-CC-F102_1_2	663.41	CCF OF TWO COMPONENTS: B21-UV_-CC-F102A & B21-UV_-CC-F102B
B21-UV_-CC-F111_1_2	663.41	CCF OF TWO COMPONENTS: B21-UV_-CC-F111A & B21-UV_-CC-F111B
C63-CCFSOFTWARE	450.87	COMMON CAUSE FAILURE OF SOFTWARE
C63-LOG-FC-ESFLG_ALL	423.81	CCF OF ALL COMPONENTS IN GROUP 'C63-LOG-FC-ESFLG'
C63-LDD-FC-ESFLOADS	358.11	CCF OF ALL ESF LOAD DRIVERS
C63-CCFSOFTWARE_S	347.8	ESF SPURIOUS COMMON CAUSE SOFTWARE FAILURE
R13-INV-FC-CCFNSR_ALL	345.36	CCF OF ALL COMPONENTS IN GROUP 'R13-INV-FC-CCFNSR'
C63-DTM-FC-ESFLG_ALL	340.88	CCF OF ALL COMPONENTS IN GROUP 'C63-DTM-FC-ESFLG'
C72-CCFSOFTWARE	330.03	COMMON CAUSE FAILURE OF DPS PROCESSORS
T15-FLT-PP_ALL	309.77	CCF OF ALL COMPONENTS IN GROUP 'T15-FLT-PP'
C72-LOG-FC-D_1_2	309.7	CCF OF TWO COMPONENTS: C72-LOG-FC-D1DPS & C72-LOG-FC-D2DPS

Table 17.2-4

At-Power Internal Events Common Cause Failures

EVENT NAME	ACH W	DESCRIPTION
C72-LOG-FC-D_1_3	309.7	CCF OF TWO COMPONENTS: C72-LOG-FC-D1DPS & C72-LOG-FC-D3DPS
C72-LOG-FC-D_2_3	309.7	CCF OF TWO COMPONENTS: C72-LOG-FC-D2DPS & C72-LOG-FC-D3DPS
C63-LT_-NO-ESFRX_ALL	288.88	CCF OF ALL COMPONENTS IN GROUP 'C63-LT_-NO-ESFRX'
R16-BT_-LP-CCFNSR_ALL	286.41	CCF OF ALL COMPONENTS IN GROUP 'R16-BT_-LP-CCFNSR'
C72-LOG-FC-D_1_2_3	282.78	CCF OF THREE COMPONENTS: C72-LOG-FC-D1DPS & C72-LOG-FC-D2DPS & C72-LOG-FC-D3DPS
C72-LDD-FC-LOADS	271.34	COMMON CAUSE FAILURE OF DPS LOAD DRIVERS
C63-DTM-FC-ESFLG_1_2_3	269.99	CCF OF THREE COMPONENTS: C63-DTM-FC-ESFD1 & C63-DTM-FC-ESFD2 & C63-DTM-FC-ESFD3
C63-DTM-FC-ESFLG_1_2_4	269.99	CCF OF THREE COMPONENTS: C63-DTM-FC-ESFD1 & C63-DTM-FC-ESFD2 & C63-DTM-FC-ESFD4
C63-DTM-FC-ESFLG_1_3_4	269.99	CCF OF THREE COMPONENTS: C63-DTM-FC-ESFD1 & C63-DTM-FC-ESFD3 & C63-DTM-FC-ESFD4
C63-DTM-FC-ESFLG_2_3_4	269.99	CCF OF THREE COMPONENTS: C63-DTM-FC-ESFD2 & C63-DTM-FC-ESFD3 & C63-DTM-FC-ESFD4
C62-PSP-FO-DPSEP_ALL	255.29	CCF OF ALL COMPONENTS IN GROUP 'C62-PSP-FO-DPSEP'
R13-INV-FC-CCFNSR_1_3_5	222.18	CCF OF THREE COMPONENTS: R13-INV-FC-R13A1 & R13-INV-FC-R13B1 & R13-INV-FC-R13C
T15-HX_-PP_ALL	219.02	CCF OF ALL COMPONENTS IN GROUP 'T15-HX_-PP'
C62-PSP-FO-DPSEP_5_6	148.15	CCF OF TWO COMPONENTS: C72-PSP-FO-DPSCNTPSA & C72-PSP-FO-DPSCNTPSB
T15-FLT-PP_1_2_3	145.18	CCF OF THREE COMPONENTS: T15-FLT-PP-D001A & T15-FLT-PP-D001B & T15-FLT-PP-D001C
T15-FLT-PP_1_2_4	145.18	CCF OF THREE COMPONENTS: T15-FLT-PP-D001A & T15-FLT-PP-D001B & T15-FLT-PP-D001D
T15-FLT-PP_1_2_5	145.18	CCF OF THREE COMPONENTS: T15-FLT-PP-D001A & T15-FLT-PP-D001B & T15-FLT-PP-D001E
T15-FLT-PP_1_2_6	145.18	CCF OF THREE COMPONENTS: T15-FLT-PP-D001A & T15-FLT-PP-D001B & T15-FLT-PP-D001F

Table 17.2-4

At-Power Internal Events Common Cause Failures

EVENT NAME	ACH W	DESCRIPTION
T15-FLT-PP_1_3_4	145.18	CCF OF THREE COMPONENTS: T15-FLT-PP-D001A & T15-FLT-PP-D001C & T15-FLT-PP-D001D
T15-FLT-PP_1_3_5	145.18	CCF OF THREE COMPONENTS: T15-FLT-PP-D001A & T15-FLT-PP-D001C & T15-FLT-PP-D001E
T15-FLT-PP_1_3_6	145.18	CCF OF THREE COMPONENTS: T15-FLT-PP-D001A & T15-FLT-PP-D001C & T15-FLT-PP-D001F
T15-FLT-PP_1_4_5	145.18	CCF OF THREE COMPONENTS: T15-FLT-PP-D001A & T15-FLT-PP-D001D & T15-FLT-PP-D001E
T15-FLT-PP_1_4_6	145.18	CCF OF THREE COMPONENTS: T15-FLT-PP-D001A & T15-FLT-PP-D001D & T15-FLT-PP-D001F
T15-FLT-PP_1_5_6	145.18	CCF OF THREE COMPONENTS: T15-FLT-PP-D001A & T15-FLT-PP-D001E & T15-FLT-PP-D001F
T15-FLT-PP_2_3_4	145.18	CCF OF THREE COMPONENTS: T15-FLT-PP-D001B & T15-FLT-PP-D001C & T15-FLT-PP-D001D
T15-FLT-PP_2_3_5	145.18	CCF OF THREE COMPONENTS: T15-FLT-PP-D001B & T15-FLT-PP-D001C & T15-FLT-PP-D001E
T15-FLT-PP_2_3_6	145.18	CCF OF THREE COMPONENTS: T15-FLT-PP-D001B & T15-FLT-PP-D001C & T15-FLT-PP-D001F
T15-FLT-PP_2_4_5	145.18	CCF OF THREE COMPONENTS: T15-FLT-PP-D001B & T15-FLT-PP-D001D & T15-FLT-PP-D001E
T15-FLT-PP_2_4_6	145.18	CCF OF THREE COMPONENTS: T15-FLT-PP-D001B & T15-FLT-PP-D001D & T15-FLT-PP-D001F
T15-FLT-PP_2_5_6	145.18	CCF OF THREE COMPONENTS: T15-FLT-PP-D001B & T15-FLT-PP-D001E & T15-FLT-PP-D001F
T15-FLT-PP_3_4_5	145.18	CCF OF THREE COMPONENTS: T15-FLT-PP-D001C & T15-FLT-PP-D001D & T15-FLT-PP-D001E
T15-FLT-PP_3_4_6	145.18	CCF OF THREE COMPONENTS: T15-FLT-PP-D001C & T15-FLT-PP-D001D & T15-FLT-PP-D001F
T15-FLT-PP_3_5_6	145.18	CCF OF THREE COMPONENTS: T15-FLT-PP-D001C & T15-FLT-PP-D001E & T15-FLT-PP-D001F

Table 17.2-4

At-Power Internal Events Common Cause Failures

EVENT NAME	ACH W	DESCRIPTION
T15-FLT-PP_4_5_6	145.18	CCF OF THREE COMPONENTS: T15-FLT-PP-D001D & T15-FLT-PP-D001E & T15-FLT-PP-D001F
R13-INV-FC-CCFSR_ALL	141.82	CCF OF ALL COMPONENTS IN GROUP 'R13-INV-FC-CCFSR'
R11-BAC-LP-PIP_1_2	116.1	CCF OF TWO COMPONENTS: R11-BAC-LP-100A3 & R11-BAC-LP-100B3
C62-CCFSOFTWARE	109.86	N-DCIS COMMON CAUSE SOFTWARE FAILURE
C62-CCFSOFTWARE_S	109.86	N-DCIS SPURIOUS COMMON CAUSE SOFTWARE FAILURE
C62-DTM-FC-PIPMP_1_2	109.34	CCF OF TWO COMPONENTS: C62-DTM-FC-PIPA & C62-DTM-FC-PIPB
C62-LOG-FC-PIPMP_ALL	108.22	CCF OF ALL COMPONENTS IN GROUP 'C62-LOG-FC-PIPMP'
P41-FAN-FR_ALL	106.66	CCF OF ALL COMPONENTS IN GROUP 'P41-FAN-FR'
R16-BT_-LP-CCFSR_ALL	106.59	CCF OF ALL COMPONENTS IN GROUP 'R16-BT_-LP-CCFSR'
P41-STR-PG_ALL	106.17	CCF OF ALL COMPONENTS IN GROUP 'P41-STR-PG'
P41-FAN-FR_1_2	105.1	CCF OF TWO COMPONENTS: P41-FAN-FR-0001A & P41-FAN-FR-0001B
P41-FAN-FR_1_4	105.1	CCF OF TWO COMPONENTS: P41-FAN-FR-0001A & P41-FAN-FR-0002B
P41-FAN-FR_2_3	105.1	CCF OF TWO COMPONENTS: P41-FAN-FR-0001B & P41-FAN-FR-0002A
P41-FAN-FR_3_4	105.1	CCF OF TWO COMPONENTS: P41-FAN-FR-0002A & P41-FAN-FR-0002B
C62-LDD-FC-LOADS	104.86	COMMON CAUSE FAILURE OF REMAINING NDCIS LOAD DRIVERS
P41-MPW-FR_ALL	104.51	CCF OF ALL COMPONENTS IN GROUP 'P41-MPW-FR'
P41-FAN-FR_1_2_3	99.92	CCF OF THREE COMPONENTS: P41-FAN-FR-0001A & P41-FAN-FR-0001B & P41-FAN-FR-0002A
P41-FAN-FR_1_2_4	99.92	CCF OF THREE COMPONENTS: P41-FAN-FR-0001A & P41-FAN-FR-0001B & P41-FAN-FR-0002B
P41-FAN-FR_1_3_4	99.92	CCF OF THREE COMPONENTS: P41-FAN-FR-0001A & P41-FAN-FR-0002A & P41-FAN-FR-0002B

Table 17.2-4

At-Power Internal Events Common Cause Failures

EVENT NAME	ACH W	DESCRIPTION
P41-FAN-FR_2_3_4	99.92	CCF OF THREE COMPONENTS: P41-FAN-FR-0001B & P41-FAN-FR-0002A & P41-FAN-FR-0002B
C62-PSP-FO-PIPEP_ALL	99.82	CCF OF ALL COMPONENTS IN GROUP 'C62-PSP-FO-PIPEP'
P41-STR-PG_1_2_3	96.89	CCF OF THREE COMPONENTS: P41-STR-PG-D01A & P41-STR-PG-D01B & P41-STR-PG-D02A
P41-STR-PG_1_2_4	96.89	CCF OF THREE COMPONENTS: P41-STR-PG-D01A & P41-STR-PG-D01B & P41-STR-PG-D02B
P41-STR-PG_1_3_4	96.89	CCF OF THREE COMPONENTS: P41-STR-PG-D01A & P41-STR-PG-D02A & P41-STR-PG-D02B
P41-STR-PG_2_3_4	96.89	CCF OF THREE COMPONENTS: P41-STR-PG-D01B & P41-STR-PG-D02A & P41-STR-PG-D02B
C63-LT_-NO-ESFRX_1_2_3	86.91	CCF OF THREE COMPONENTS: C63-LT_-NO-ESFRXLVLA & C63-LT_-NO-ESFRXLVLB & C63-LT_-N
C63-LT_-NO-ESFRX_1_2_4	86.91	CCF OF THREE COMPONENTS: C63-LT_-NO-ESFRXLVLA & C63-LT_-NO-ESFRXLVLB & C63-LT_-N
C63-LT_-NO-ESFRX_1_3_4	86.91	CCF OF THREE COMPONENTS: C63-LT_-NO-ESFRXLVLA & C63-LT_-NO-ESFRXLVLC & C63-LT_-N
C63-LT_-NO-ESFRX_2_3_4	86.91	CCF OF THREE COMPONENTS: C63-LT_-NO-ESFRXLVLB & C63-LT_-NO-ESFRXLVLC & C63-LT_-N
R16-BT_-LP-CCFNSR_1_3_5	83.27	CCF OF THREE COMPONENTS: R16-BT_-LP-R16BTA1 & R16-BT_-LP-R16BTB1 & R16-BT_-LP-R1
C62-LT_-NO-NDCRX_ALL	77.59	CCF OF ALL COMPONENTS IN GROUP 'C62-LT_-NO-NDCRX'
C62-TT_-NO-NDCRX_ALL	65.73	CCF OF ALL COMPONENTS IN GROUP 'C62-TT_-NO-NDCRX'
B32-HX_-PG_ALL	65.15	CCF OF ALL COMPONENTS IN GROUP 'B32-HX_-PG'

Table 17.2-5

At-Power Internal Events Operator Actions (DELETED)

17.3 AT-POWER EXTERNAL EVENTS

Risks due to external events initiated by fire, flood, and high winds are quantified and described below. Seismic risk is assessed qualitatively using a seismic margins analysis. Other external events are treated in a bounding manner such that potential ESBWR sites are able to reach the same conclusions for external events.

17.3.1 External Events - Fire

17.3.1.1 Significant Core Damage Sequences – Fire

The CDF for fire-initiated events is 1.25E-8/year. This is a screening value that is appropriately used in the design phase to evaluate spatial interactions. It does not credit automatic or manual suppression, and it conservatively assumes that each fire creates maximum damage. The most important fire sequences involve loss of either PIP-A or PIP-B due to a fire in one of the two cable tunnels; loss of both PIP-A and DPS controls due to a fire propagation between the N-DCIS A room in control building and the DPS room; loss of preferred power due to a fire in switchyard; and a loss of one electrical division due to a fire in the Reactor Building. The cutsets associated with these sequences involve the common cause failure of inserting the control rods, common cause software failures on the digital control systems, and failure of the Operators to recognize the need to depressurize and provide low-pressure injection.

17.3.1.2 Significant Initiating Events – Fire

The most important fire- induced initiated events involve fires in the cable tunnels that disable either PIP-A or PIP-B control signals and power supplies. Postulated fire propagation between the N-DCIS A room and the DPS room also has significant contribution because it disables both the PIP-A and DPS controls. Other significant fire initiating events include the fires in the switchyard that results in loss of preferred power, and the Reactor Building that disable Division I or II electrical equipment.

17.3.1.3 Significant Functions, SSCs, and Operator Actions – Fire

The ESBWR, due to its basic layout and safety design features, is inherently capable of mitigating potential internal fires. Safety system redundancy and physical separation by fire barriers ensure that in all cases a single fire limits damage to a single safety system division or system redundancy. Fire propagation to neighboring areas presents a relatively minor risk contribution except the fire propagation scenarios between the N-DCIS A room and the DPS room in the Control Building.

Fires in the control room are assumed to affect the execution of human actions from there. One feature relevant to the design is that a fire in the control room does not affect the automatic actuations of the safety systems. Additionally, the existence of remote shutdown panels allows the opportunity to perform manual actuations for failed automatic actuations that may occur.

Similar to the internal events analysis, the F-V importance values for fires are low, which indicates a balanced risk profile.

17.3.1.4 Large Release Sequences – Fire

The LRF for fire-initiated events is 1.56E-9/year. One additional significant function is the ability of the BiMAC device to cool the molten core; however, the value of the failure probability is a conservative point estimate. There are no additional insights from SSCs, or Operator Actions in large release fire sequences.

17.3.2 External Events - Flood

17.3.2.1 Significant Core Damage Sequences - Flood

The CDF for flooding initiated events is 6.95E-9/year. A conservative approach was used because plant layout details are not yet fully developed.

The most important flood sequences involve leaks in the Turbine Building – Main Condenser (TB-C) area, the electrical building general area, the turbine building's first floor, and Service Water Pumphouse. The cutsets associated with these sequences involve the common cause software failures on the digital control systems, and failures of the some single components that disable either the depressurization systems, or the AC power supplies, or the IC/PCC pool makeup.

17.3.2.2 Significant Initiating Events – Flood

The flood initiating events with the highest importance values are leaks initiated in the Turbine Building – Main Condenser area (including the steam tunnel) that conservatively assumes to disable the nuclear boiler system components in the steam tunnel. The next important events are described as follows:

- The pipe breaks in the fire protection system in either the electrical building general area or the turbine building's first floor, which disable either the components supporting both PIP buses, or the components supporting both RCCWS trains.
- The pipe breaks in the Service Water Pumphouse that disable Service Water Train A or B.

17.3.2.3 Significant Functions, SSCs, and Operator Actions - Flood

There are no additional functions, SSCs or operator actions that are significant solely due to flooding events.

17.3.2.4 Large Release Sequences – Flood

The LRF due to flooding is 4.09E-9/year. There are no additional functions, SSCs or operator actions that are significant solely due to flooding events.

17.3.3 External Events – Wind

17.3.3.1 Significant Core Damage Sequences - Wind

The CDF due to high winds from tornadoes or hurricanes is 8.51E-9/year.

The most important wind sequences are similar to internal event %T-LOPP sequences, with the additional loss of the condensate storage tank in some sequences.

17.3.3.2 Significant Initiating Events - Wind

The internal events initiating event %T-LOPP-WR is used to reflect the assumption that a damaging high wind event will resemble a loss of preferred power.

17.3.3.3 Significant Functions, SSCs, and Operator Actions – Wind

There are no additional functions, SSCs or operator actions that are significant solely due to high wind events.

17.3.3.4 Large Release Sequences – Wind

The high winds analysis produces a total non-TSL release frequency of 1.24E-9/year.

17.3.4 Summary of Important Results and Insights – At-Power External Events

The ESBWR is inherently safe with respect to internal fire events. All potential fires have been analyzed and it has been shown that the plant can be safely shut down at low risk to plant personnel and the general public.

The ESBWR is inherently safe with respect to internal flood events and no operator actions are required to mitigate postulated floods. Although timely operator action can reduce damage to equipment and flood events, these actions are not yet developed and their benefit is not included. It has been shown that the plant can be safely shut down at low risk to plant personnel and the general public.

The ESBWR high wind analysis explicitly quantifies accident sequences initiated by tornado winds. Straight winds are lesser velocity winds that pose minimal challenges to the plant design. Hurricane winds are quantified using a bounding analysis. Due to the strength of construction of the ESBWR Category I buildings, the effects of a tornado strike are limited to Loss of Preferred Power events with a potential loss of the Condensate Storage Tank. Overall risk from tornados and high winds is further minimized by design features such as the diesel driven fire protection pump for alternate RPV injection, and the DC batteries with a 72-hour operational life.

17.4 SHUTDOWN INTERNAL EVENTS

17.4.1 Significant Core Damage Sequences – Shutdown Internal Events

The CDF for shutdown internal events is 1.70E-8/year.

By far, the greatest contribution to shutdown risk comes from breaks in lines connected to the vessel below TAF. In these cases, the lower drywell equipment hatch or personnel hatch is likely to be open to facilitate work in the lower drywell. Although the frequency of these events is very low, there is only one method for mitigation – manual closure of the hatch(es).

Besides lower drywell LOCA events, RPV draindown events have the next largest impact on the shutdown PRA results. The significant cases for draindown events result in RWCU isolation due to the leak, followed by a failure to provide alternate decay heat removal. The highest contributing RPV draindown cases are during Mode 6 Unflooded.

LOCA events above the TAF do not contribute much at all to the entire overall shutdown CDF. The highest sequence for any LOCA above the fuel has a value is three orders of magnitude below the highest cutset, and two orders of magnitude below the highest non-LOCA cutsets.

17.4.1.1 Initiating Events – Shutdown Internal Events

The most important initiating events are LOCAs in instrument lines below the top of the fuel, during Mode 5 and Mode 6, and the RPV draindown events in all modes, especially for Mode 6 Unflooded.

17.4.1.2 Component Reliability and Availability – Shutdown Internal Events

Additional significant basic events based on the RAW criterion are the GDCS maintenance valves and squib valves.

17.4.1.3 Operator Actions

Additional significant operator actions in the shutdown model include the failure to close the drywell hatches after a pipe break in an RWCU drain line or in an instrumentation line below the top of active fuel, failure to isolate the leakage due to the postulated RPV draindown events, and failure to recognize the need for low pressure makeup after depressurization.

17.4.2 Significant Large Release Sequences – Shutdown Internal Events

During shutdown conditions all core damage sequences are assumed to be bypass sequences, therefore, large release sequences are not evaluated further.

.

17.5 SHUTDOWN EXTERNAL EVENTS

17.5.1 Significant Core Damage Sequences

The CDF for fire-initiated events during shutdown is 9.56E-9/year. The CDF for flood-initiated events during shutdown is 5.21E-9/year. The CDF for high wind-initiated events during shutdown is 3.95E-8/year.

17.5.1.1 Initiating Events

The most important fire-initiated Shutdown Events are Loss of RWCU/SDC due to fire in Turbine Building – Modes 5, 5 Open and 6-Unflooded; and, loss of preferred power due to fire in the switchyard - Modes 5, 5 Open and Mode 6-Unflooded.

The most important flood-initiated Shutdown Events are a Break in the makeup water system at the Reactor Building elevation 17500 during Modes 5 and 5 Open a break in the Fire Protection system in the Turbine Building and, Service Water Building SW Line Break.

The internal events shutdown initiating event %M5_LOPP, %M5O_LOPP and %M6U_LOPP are used to reflect the assumption that a damaging high wind event will resemble a loss of preferred power.

17.5.1.2 Component Reliability and Availability

For fire-initiated shutdown events, the additional important components are the safety-related UPS buses due to the conservative assumptions that some divisions are not available in the shutdown conditions. For flood or high wind initiated events, there are no additional components that are significant in these scenarios.

17.5.1.3 Operator Actions

There are two additional operator actions that are important for Shutdown external events, and the both involve fire-initiated events. They involve failure to initiate CRD injection and failure to open 2 SRVs for depressurization.

17.5.2 Summary of Important Shutdown Results and Insights

Administrative controls should be used to ensure that the Drywell Hatches can be closed during shutdown conditions if a loss of coolant event is initiated in the drywell.

The ESBWR plant has excellent capability to mitigate the consequences due to postulated internal fires. The separation criteria incorporated in the ESBWR design, especially for the safety-related systems and RTNSS systems, greatly enhance the redundancy and ensure that a single fire cannot defeat a whole system.

The dominant risk contributors with respect to fire scenarios are the postulated fires in turbine building general area and the switchyard area. As stated in Section 12.8.4, conservatism is embedded in the shutdown modeling by assuming a fire in these two fire areas can induce a shutdown-initiating event and fails all the components in the subject fire area. With the exception of large turbine building fires, both fire areas are well accessible for fire suppression.

Therefore, the shutdown fire risk analysis proves that the robustness of ESBWR plant against the postulated fires.

The plant should not be in a Mode 6 Unflooded condition when a hurricane strike occurs. This is because in Mode 6 unflooded the containment is open, the reactor vessel is open and the water above the core will not keep the core cool for an extended period of time.

17.6 INSIGHTS FROM SEISMIC MARGINS ANALYSIS

A PRA-based seismic margins analysis is performed for the ESBWR to calculate high confidence low probability of failure (HCLPF) accelerations for important accident sequences and accident classes. The ESBWR seismic margins HCLPF accident sequence analysis concludes that the ESBWR is inherently capable of safe shutdown in response to beyond design basis earthquakes and has a plant level HCLPF of 1.67 times the safe shutdown earthquake (SSE). Chapter 15 of NEDO-33201 provides details of the PRA-based seismic margin assessment.

DCD Tier 2 Table 19.2-4 contains the systems evaluated in the ESBWR and contains minimum HCLPF ratio for these systems.

17.6.1 Significant Core Damage Sequences

A PRA-based Seismic Margins Analysis is used to derive seismic vulnerability insights. Therefore, there are no CDF calculations performed. The Seismic Margins Analysis concludes that the most significant HCLPF sequences are seismic-induced loss of DC power and seismic-induced ATWS due to seismic-induced failure of the fuel channels and seismic-induced failure of the SLC tank.

Based on previous industry seismic analyses, seismic risk is dominated by seismic-induced SSC failures, and not by random SSC failures or human actions. Human actions are typically not necessary until the long-term.

There are no additional SSCs that are risk significant due to the Seismic Margins Analysis.

17.6.2 Significant Large Release Sequences

A PRA-based Seismic Margins Analysis is used to derive seismic vulnerability insights. Therefore, there are no LRF calculations performed.

17.6.3 Significant Offsite Consequences

A PRA-based Seismic Margins Analysis is used to derive seismic vulnerability insights. Therefore, there are no off-site consequences calculations performed. Due to the bounding method that is used to calculate the seismic margin, it is considered to be unnecessary to extrapolate offsite consequences.

17.7 SUMMARY OF IMPORTANT RESULTS AND INSIGHTS

Table 17.1-1 lists the CDF and LRF values for each quantified risk condition in the ESBWR PRA. It is important to restate that because the individual CDF values are developed with differing levels of conservatism, it is not meaningful to add CDF or LRF values to create total values.

Table 17.1-3 lists risk-significant operator actions based on the results of this section. Tables 17.2-1 through 17.2-4 contain the results of the at-power internal events importance analyses.

Tables 17.7-1 through 17.7-24 list both the F-V and RAW importance measures for all operator actions in all ESBWR PRA models (i.e., internal events and external events, Level 1 and Level 2, at-power and shutdown).

Table 17.7-1

Internal Events CDF At-Power Operator Actions - RAW

BASIC EVENT	DESCRIPTION	HRA TYPE	RAW	THRESHOLD
XXX-XHE-FO-ICPCCS	OPERATOR FAILS TO RECOGNIZE THE NEED TO MAKEUP ICS/PCCS POOL LEVEL.	C	4.15	**N**
XXX-XHE-FO-DEPRESS	OPERATOR FAILS TO RECOGNIZE NEED OF DEPRESSURIZATION	C	2.86	**N**
XXX-XHE-FO-LPMAKEUP	OP. FAILS TO RECOG. NEED FOR LOW PRESS. MAKEUP AFTER DEPRESSURIZATION	C	2.43	**N**
B21-XHE-FO-6OPEN	OPERATOR FAILS TO OPEN 6/10 SRVS	C	2.38	**N**
C12-BV_-RE-F018A	MISPOSITION OF VALVE F018A	A	2.14	**N**
C12-BV_-RE-F021A	MISPOSITION OF VALVE F021A	A	2.14	**N**
C12-BV_-RE-F003B	MISPOSITION OF VALVE F003B	A	1.99	**N**
C12-BV_-RE-F018B	MISPOSITION OF VALVE FO18B	A	1.99	**N**
C12-BV_-RE-F021B	MISPOSITION OF VALVE F021B	A	1.99	**N**
U43-XHE-FO-LPCI	OPERATOR FAILS TO ACTUATE U43 IN LPCI MODE	C	1.94	**N**
C12-BV_-RE-F013A	MISPOSITION OF VALVE F013A	A	1.86	**N**
C12-BV_-RE-F013B	MISPOSITION OF VALVE F013B	A	1.86	**N**
C12-BV_-RE-F015A	MISPOSITION OF VALVE F015A	A	1.86	**N**
C12-BV_-RE-F015B	MISPOSITION OF VALVE F015B	A	1.86	**N**
P21-TRN-RE-HX1A	FAILURE TO RESTORE RCCW TRAIN 1A HX	A	1.49	**N**
P21-TRN-RE-HX2A	FAILURE TO RESTORE RCCW TRAIN 2A HX	A	1.49	**N**
P21-TRN-RE-HX3A	FAILURE TO RESTORE RCCW TRAIN 3A HX	A	1.49	**N**
P21-TRN-RE-PUMP1A	FAILURE TO RESTORE RCCW TRAIN 1A PUMP	A	1.49	**N**
P21-TRN-RE-PUMP2A	FAILURE TO RESTORE RCCW TRAIN 2A PUMP	A	1.49	**N**
P21-TRN-RE-PUMP3A	FAILURE TO RESTORE RCCW TRAIN 3A PUMP	A	1.49	**N**
P21-TRN-RE-HX1B	FAILURE TO RESTORE RCCW TRAIN 1B HX	A	1.49	**N**
P21-TRN-RE-HX2B	FAILURE TO RESTORE RCCW TRAIN 2B HX	A	1.49	**N**
P21-TRN-RE-HX3B	FAILURE TO RESTORE RCCW TRAIN 3B HX	A	1.49	**N**
P21-TRN-RE-PUMP1B	FAILURE TO RESTORE RCCW TRAIN 1B PUMP	A	1.49	**N**
P21-TRN-RE-PUMP2B	FAILURE TO RESTORE RCCW TRAIN 2B PUMP	A	1.49	**N**
P21-TRN-RE-PUMP3B	FAILURE TO RESTORE RCCW TRAIN 3B PUMP	A	1.49	**N**
N21-XHE-FO-FWRERUN	OPERATOR FAILS TO RESTART FDW AFTER RUNBACK - ATWS	C	1.24	**N**

Table 17.7-1

Internal Events CDF At-Power Operator Actions - RAW

BASIC EVENT	DESCRIPTION	HRA TYPE	RAW	THRESHOLD
R21-XHE-FO-ADG	OPERATOR FAILS TO CONTROL THE LOADS ON ANCILLARY DG BUSES	C	1.19	N
P41-TRN-RE-PUMP2A	FAILURE TO RESTORE PSW PUMP 2A	A	1.11	N
P41-TRN-RE-PUMP2B	FAILURE TO RESTORE PSW PUMP 2B	A	1.11	N
B32-XHE-FO-VENT	OPERATOR FAILS TO OPEN VENT	C	1.1	N
U43-XHE-FO-MAKEUP	OPERATOR FAILS TO ACTUATE U43 IN MAKE UP MODE	C	1.06	N
U43-XHE-FO-PMPTRK	OPERATOR FAIL TO SUPPLY WATER FROM PUMP TRUCKS	C	1.04	N
R13-XHE-FO-ADG	OPERATOR FAILS TO ALIGN THE ADG BUSES TO UPS BUSES	C	1.04	N
C12-XHE-FO-LL-INJ	OPERATOR FAILS TO ACTUATE INJECTION BYPASS	C	1.03	N
P51-XHE-P21-BU	OPERATOR ACTION TO CONNECT ALTERNATE COOLING GIVEN RCCW FAILED	C	1.02	N
R21-TRN-RE-FOADGA	FAILURE TO RESTORE FUEL OIL TRANSFER TRAIN FOR ADG-A	A	1.02	N
R21-TRN-RE-FOADGB	FAILURE TO RESTORE FUEL OIL TRANSFER TRAIN FOR ADG-A	A	1.02	N
P54-BV_-RE-F013A	RESTERATION ERROR OF F013A	A	1.02	N
C71-XHE-FO-SCRAM	OPERATOR FAILS TO PERFORM MANUAL SCRAM	C	1.01	N
R21-TRN-RE-FODG1A	FAILURE TO RESTORE FUEL OIL TRANSFER TRAIN 1 FOR DG-A	A	1.01	N
R21-TRN-RE-FODG1B	FAILURE TO RESTORE FUEL OIL TRANSFER TRAIN 1 FOR DG-B	A	1.01	N
R21-TRN-RE-FODG2A	FAILURE TO RESTORE FUEL OIL TRANSFER TRAIN 2 FOR DG-A	A	1.01	N
R21-TRN-RE-FODG2B	FAILURE TO RESTORE FUEL OIL TRANSFER TRAIN 2 FOR DG-B	A	1.01	N
R21-XHE-FO-ADGCROSS	OPERATOR FAILS TO CROSS-TIE THE ANCILLARY DG BUSES	C	1.01	N
P52-XHE-CC-0001-B	OPERATOR FAILS TO OPEN STANDBY TRAIN AOV 0001-B	C	1.01	N
G31-XHE-FO-MIBOC	OPERATOR FAILS TO ISOLATE RWCU BREAK OUTSIDE CONTAINMENT	C	1.01	N
P22-TRN-RE-PUMP1C	FAILURE TO RESTORE TCCW PUMP 1C	A	1.01	N
N21-XHE-FO-CONDMU	FAILURE TO MANUALLY OPEN CONDENSER MAKEUP VALVES	C	1	N
C12-XHE-FO-LEVEL2	OPERATOR FAILS TO BACK-UP CRD ACTUATION	C	1	N
P22-XHE-FO-HX	FAILURE TO ALIGN TCCW HX	C	1	N
P41-XHE-FO-TCCWHX	FAILURE TO MANUALLY ALIGN STANDBY TCCW HX	C	1	N
XXX-XHE-FO-RPVLDE	OP. FAILS TO RECOG. OR CHECK THE RPV DECREASING LEVEL	C	1	N
P41-TRN-RE-PUMP1B	FAILURE TO RESTORE PSW PUMP 1B	A	1	N

Table 17.7-1

Internal Events CDF At-Power Operator Actions - RAW

BASIC EVENT	DESCRIPTION	HRA TYPE	RAW	THRESHOLD
G31-XHE-FO-SDC	OPERATOR FAILS TO ACTUATE SDC MODE NO MSL LOCA OUSIDE CONTAINMENT NO SLCS	C	1	**N**
P41-TRN-RE-PUMP1A	FAILURE TO RESTORE PSW PUMP 1A	A	1	**N**
T10-XHE-FO-CONTVENT	OPERATOR FAILS TO ACTUATE CONTAINMENT VENTING	C	1	**N**
C12-BV_-RE-F064	MISPOSITION OF OPEN VALVE F064	A	1	**N**
G21-XHE-FO-LPCI	OPERATOR FAILS TO ALIGN AND ACTUATE FAPCS IN LPCI MODE	C	1	**N**
G21-XHE-FO-RSPC	OPERATOR FAILS TO RECOG. NEED FOR SPC	C	1	**N**
U43-XHE-FO-2ND	OPERATOR FAILS TO ALIGN FPS CROSSTIE	C	1	**N**
P51-XHE-FO-0001-CD	OPERATOR FAILS TO ALIGN ONE BACKUP CMP TO STANDBY	C	1	**N**
G31-XHE-FO-SDCATWS	OPERATOR FAILS TO ACTUATE SDC MODE ATWS	C	1	**N**
G31-TRN-RE-TRAINB	RESTORATION ERRORS RWCU/SDC TRAIN B	A	1	**N**
E50-XHE-FO-EQU	OPERATOR FAILS TO ACTUATE GDCS	C	1	**N**

Table 17.7-2

Internal Events CDF At-Power Operator Actions - FV

BASIC EVENT	DESCRIPTION	HRA TYPE	FV	THRESHOLD
XXX-XHE-FO-DEPRESS	OPERATOR FAILS TO RECOGNIZE NEED OF DEPRESSURIZATION	C	3.57E-01	Y
XXX-XHE-FO-LPMAKEUP	OP. FAILS TO RECOG. NEED FOR LOW PRESS. MAKEUP AFTER DEPRESSURIZATION	C	2.74E-01	Y
N21-XHE-FO-FWRERUN	OPERATOR FAILS TO RESTART FDW AFTER RUNBACK - ATWS	C	5.16E-02	Y
C12-BV_-RE-F013A	MISPOSITION OF VALVE F013A	A	4.38E-02	Y
C12-BV_-RE-F013B	MISPOSITION OF VALVE F013B	A	4.38E-02	Y
C12-BV_-RE-F015A	MISPOSITION OF VALVE F015A	A	4.38E-02	Y
C12-BV_-RE-F015B	MISPOSITION OF VALVE F015B	A	4.38E-02	Y
B32-XHE-FO-VENT	OPERATOR FAILS TO OPEN VENT	C	2.10E-02	Y
C12-BV_-RE-F018A	MISPOSITION OF VALVE F018A	A	1.39E-02	Y
C12-BV_-RE-F021A	MISPOSITION OF VALVE F021A	A	1.39E-02	Y
C12-BV_-RE-F003B	MISPOSITION OF VALVE F003B	A	1.21E-02	Y
C12-BV_-RE-F018B	MISPOSITION OF VALVE FO18B	A	1.21E-02	Y
C12-BV_-RE-F021B	MISPOSITION OF VALVE F021B	A	1.21E-02	Y
XXX-XHE-FO-ICPCCS	OPERATOR FAILS TO RECOGNIZE THE NEED TO MAKEUP ICS/PCCS POOL LEVEL.	C	5.13E-03	N
P21-TRN-RE-HX1A	FAILURE TO RESTORE RCCW TRAIN 1A HX	A	3.98E-03	N
P21-TRN-RE-HX2A	FAILURE TO RESTORE RCCW TRAIN 2A HX	A	3.98E-03	N
P21-TRN-RE-HX3A	FAILURE TO RESTORE RCCW TRAIN 3A HX	A	3.98E-03	N
P21-TRN-RE-PUMP1A	FAILURE TO RESTORE RCCW TRAIN 1A PUMP	A	3.98E-03	N
P21-TRN-RE-PUMP2A	FAILURE TO RESTORE RCCW TRAIN 2A PUMP	A	3.98E-03	N
P21-TRN-RE-PUMP3A	FAILURE TO RESTORE RCCW TRAIN 3A PUMP	A	3.98E-03	N
P21-TRN-RE-HX1B	FAILURE TO RESTORE RCCW TRAIN 1B HX	A	3.97E-03	N
P21-TRN-RE-HX2B	FAILURE TO RESTORE RCCW TRAIN 2B HX	A	3.97E-03	N
P21-TRN-RE-HX3B	FAILURE TO RESTORE RCCW TRAIN 3B HX	A	3.97E-03	N
P21-TRN-RE-PUMP1B	FAILURE TO RESTORE RCCW TRAIN 1B PUMP	A	3.97E-03	N
P21-TRN-RE-PUMP2B	FAILURE TO RESTORE RCCW TRAIN 2B PUMP	A	3.97E-03	N

Table 17.7-2

Internal Events CDF At-Power Operator Actions - FV

BASIC EVENT	DESCRIPTION	HRA TYPE	FV	THRESHOLD
P21-TRN-RE-PUMP3B	FAILURE TO RESTORE RCCW TRAIN 3B PUMP	A	3.97E-03	N
R21-XHE-FO-ADG	OPERATOR FAILS TO CONTROL THE LOADS ON ANCILLARY DG BUSES	C	3.11E-03	N
B21-XHE-FO-6OPEN	OPERATOR FAILS TO OPEN 6/10 SRVS	C	2.24E-03	N
U43-XHE-FO-LPCI	OPERATOR FAILS TO ACTUATE U43 IN LPCI MODE	C	1.52E-03	N
U43-XHE-FO-PMPTRK	OPERATOR FAIL TO SUPPLY WATER FROM PUMP TRUCKS	C	1.05E-03	N
U43-XHE-FO-MAKEUP	OPERATOR FAILS TO ACTUATE U43 IN MAKE UP MODE	C	9.82E-04	N
C12-XHE-FO-LL-INJ	OPERATOR FAILS TO ACTUATE INJECTION BYPASS	C	9.18E-04	N
P41-TRN-RE-PUMP2A	FAILURE TO RESTORE PSW PUMP 2A	A	9.14E-04	N
P41-TRN-RE-PUMP2B	FAILURE TO RESTORE PSW PUMP 2B	A	9.07E-04	N
R13-XHE-FO-ADG	OPERATOR FAILS TO ALIGN THE ADG BUSES TO UPS BUSES	C	6.54E-04	N
C71-XHE-FO-SCRAM	OPERATOR FAILS TO PERFORM MANUAL SCRAM	C	5.97E-04	N
P51-XHE-P21-BU	OPERATOR ACTION TO CONNECT ALTERNATE COOLING GIVEN RCCW FAILED	C	4.36E-04	N
R21-TRN-RE-FOADGA	FAILURE TO RESTORE FUEL OIL TRANSFER TRAIN FOR ADG-A	A	4.11E-04	N
R21-TRN-RE-FOADGB	FAILURE TO RESTORE FUEL OIL TRANSFER TRAIN FOR ADG-A	A	3.83E-04	N
N21-XHE-FO-CONDMU	FAILURE TO MANUALLY OPEN CONDENSER MAKEUP VALVES	C	3.10E-04	N
R21-TRN-RE-FODG1A	FAILURE TO RESTORE FUEL OIL TRANSFER TRAIN 1 FOR DG-A	A	2.81E-04	N
R21-TRN-RE-FODG1B	FAILURE TO RESTORE FUEL OIL TRANSFER TRAIN 1 FOR DG-B	A	2.81E-04	N
R21-TRN-RE-FODG2A	FAILURE TO RESTORE FUEL OIL TRANSFER TRAIN 2 FOR DG-A	A	2.81E-04	N
R21-TRN-RE-FODG2B	FAILURE TO RESTORE FUEL OIL TRANSFER TRAIN 2 FOR DG-B	A	2.81E-04	N
R21-XHE-FO-ADGCROSS	OPERATOR FAILS TO CROSS-TIE THE ANCILLARY DG BUSES	C	1.99E-04	N
P52-XHE-CC-0001-B	OPERATOR FAILS TO OPEN STANDBY TRAIN AOV 0001-B	C	1.72E-04	N
G31-XHE-FO-MIBOC	OPERATOR FAILS TO ISOLATE RWCU BREAK OUTSIDE CONTAINMENT	C	1.44E-04	N
P54-BV_-RE-F013A	RESTERATION ERROR OF F013A	A	7.48E-05	N
P22-TRN-RE-PUMP1C	FAILURE TO RESTORE TCCW PUMP 1C	A	5.61E-05	N
C12-XHE-FO-LEVEL2	OPERATOR FAILS TO BACK-UP CRD ACTUATION	C	4.62E-05	N
P22-XHE-FO-HX	FAILURE TO ALIGN TCCW HX	C	4.14E-05	N
P41-XHE-FO-TCCWHX	FAILURE TO MANUALLY ALIGN STANDBY TCCW HX	C	4.14E-05	N

Table 17.7-2

Internal Events CDF At-Power Operator Actions - FV

BASIC EVENT	DESCRIPTION	HRA TYPE	FV	THRESHOLD
XXX-XHE-FO-RPVLDE	OP. FAILS TO RECOG. OR CHECK THE RPV DECREASING LEVEL	C	2.97E-05	N
P41-TRN-RE-PUMP1B	FAILURE TO RESTORE PSW PUMP 1B	A	2.56E-05	N
G31-XHE-FO-SDC	OPERATOR FAILS TO ACTUATE SDC MODE NO MSL LOCA OUSIDE CONTAINMENT NO SLCS	C	2.41E-05	N
P41-TRN-RE-PUMP1A	FAILURE TO RESTORE PSW PUMP 1A	A	2.18E-05	N
T10-XHE-FO-CONTVENT	OPERATOR FAILS TO ACTUATE CONTAINMENT VENTING	C	1.83E-05	N
C12-BV_-RE-F064	MISPOSITION OF OPEN VALVE F064	A	1.06E-05	N
G21-XHE-FO-LPCI	OPERATOR FAILS TO ALIGN AND ACTUATE FAPCS IN LPCI MODE	C	5.82E-06	N
G21-XHE-FO-RSPC	OPERATOR FAILS TO RECOG. NEED FOR SPC	C	5.00E-06	N
U43-XHE-FO-2ND	OPERATOR FAILS TO ALIGN FPS CROSSTIE	C	4.42E-06	N
P51-XHE-FO-0001-CD	OPERATOR FAILS TO ALIGN ONE BACKUP CMP TO STANDBY	C	3.38E-06	N
G31-XHE-FO-SDCATWS	OPERATOR FAILS TO ACTUATE SDC MODE ATWS	C	2.60E-06	N
G31-TRN-RE-TRAINB	RESTORATION ERRORS RWCU/SDC TRAIN B	A	1.79E-06	N
E50-XHE-FO-EQU	OPERATOR FAILS TO ACTUATE GDCS	C	1.77E-06	N

Table 17.7-3

Internal Events LRF At-Power Operator Actions - RAW

BASIC EVENT	DESCRIPTION	HRA TYPE	RAW	THRESHOLD
XXX-XHE-FO-ICPCCS	OPERATOR FAILS TO RECOGNIZE THE NEED TO MAKEUP ICS/PCCS POOL LEVEL.	C	37.4	Y
U43-XHE-FO-LPCI	OPERATOR FAILS TO ACTUATE U43 IN LPCI MODE	C	5.16	Y
XXX-XHE-FO-LPMAKEUP	OP. FAILS TO RECOG. NEED FOR LOW PRESS. MAKEUP AFTER DEPRESSURIZATION	C	5.09	Y
R21-XHE-FO-ADG	OPERATOR FAILS TO CONTROL THE LOADS ON ANCILLARY DG BUSES	C	1.84	N
U43-XHE-FO-MAKEUP	OPERATOR FAILS TO ACTUATE U43 IN MAKE UP MODE	C	1.67	N
R13-XHE-FO-ADG	OPERATOR FAILS TO ALIGN THE ADG BUSES TO UPS BUSES	C	1.5	N
U43-XHE-FO-PMPTRK	OPERATOR FAIL TO SUPPLY WATER FROM PUMP TRUCKS	C	1.44	N
P21-TRN-RE-HX1A	FAILURE TO RESTORE RCCW TRAIN 1A HX	A	1.17	N
P21-TRN-RE-HX1B	FAILURE TO RESTORE RCCW TRAIN 1B HX	A	1.17	N
P21-TRN-RE-HX2A	FAILURE TO RESTORE RCCW TRAIN 2A HX	A	1.17	N
P21-TRN-RE-HX2B	FAILURE TO RESTORE RCCW TRAIN 2B HX	A	1.17	N
P21-TRN-RE-HX3A	FAILURE TO RESTORE RCCW TRAIN 3A HX	A	1.17	N
P21-TRN-RE-HX3B	FAILURE TO RESTORE RCCW TRAIN 3B HX	A	1.17	N
P21-TRN-RE-PUMP1A	FAILURE TO RESTORE RCCW TRAIN 1A PUMP	A	1.17	N
P21-TRN-RE-PUMP1B	FAILURE TO RESTORE RCCW TRAIN 1B PUMP	A	1.17	N
P21-TRN-RE-PUMP2A	FAILURE TO RESTORE RCCW TRAIN 2A PUMP	A	1.17	N
P21-TRN-RE-PUMP2B	FAILURE TO RESTORE RCCW TRAIN 2B PUMP	A	1.17	N
P21-TRN-RE-PUMP3A	FAILURE TO RESTORE RCCW TRAIN 3A PUMP	A	1.17	N
P21-TRN-RE-PUMP3B	FAILURE TO RESTORE RCCW TRAIN 3B PUMP	A	1.17	N
C12-XHE-FO-LL-INJ	OPERATOR FAILS TO ACTUATE INJECTION BYPASS	C	1.15	N
C12-BV_-RE-F013A	MISPOSITION OF VALVE F013A	A	1.14	N
C12-BV_-RE-F013B	MISPOSITION OF VALVE F013B	A	1.14	N
C12-BV_-RE-F015A	MISPOSITION OF VALVE F015A	A	1.14	N
C12-BV_-RE-F015B	MISPOSITION OF VALVE F015B	A	1.14	N
G31-XHE-FO-MIBOC	OPERATOR FAILS TO ISOLATE RWCU BREAK OUTSIDE CONTAINMENT	C	1.1	N
C71-XHE-FO-SCRAM	OPERATOR FAILS TO PERFORM MANUAL SCRAM	C	1.07	N
C12-BV_-RE-F018A	MISPOSITION OF VALVE F018A	A	1.07	N

Table 17.7-3

Internal Events LRF At-Power Operator Actions - RAW

BASIC EVENT	DESCRIPTION	HRA TYPE	RAW	THRESHOLD
C12-BV_-RE-F021A	MISPOSITION OF VALVE F021A	A	1.07	N
XXX-XHE-FO-DEPRESS	OPERATOR FAILS TO RECOGNIZE NEED OF DEPRESSURIZATION	C	1.05	N
R21-TRN-RE-FOADGA	FAILURE TO RESTORE FUEL OIL TRANSFER TRAIN FOR ADG-A	A	1.04	N
R21-TRN-RE-FOADGB	FAILURE TO RESTORE FUEL OIL TRANSFER TRAIN FOR ADG-A	A	1.04	N
C12-BV_-RE-F003B	MISPOSITION OF VALVE F003B	A	1.04	N
C12-BV_-RE-F018B	MISPOSITION OF VALVE FO18B	A	1.04	N
C12-BV_-RE-F021B	MISPOSITION OF VALVE F021B	A	1.04	N
P54-BV_-RE-F013A	RESTERATION ERROR OF F013A	A	1.04	N
T10-XHE-FO-CONTVENT	OPERATOR FAILS TO ACTUATE CONTAINMENT VENTING	C	1.02	N
P51-XHE-P21-BU	OPERATOR ACTION TO CONNECT ALTERNATE COOLING GIVEN RCCW FAILED	C	1.02	N
XXX-XHE-FO-RPVLDE	OP. FAILS TO RECOG. OR CHECK THE RPV DECREASING LEVEL	C	1.02	N
P41-TRN-RE-PUMP2A	FAILURE TO RESTORE PSW PUMP 2A	A	1.02	N
P41-TRN-RE-PUMP2B	FAILURE TO RESTORE PSW PUMP 2B	A	1.02	N
B32-XHE-FO-VENT	OPERATOR FAILS TO OPEN VENT	C	1.01	N
P41-TRN-RE-PUMP1A	FAILURE TO RESTORE PSW PUMP 1A	A	1.01	N
P41-TRN-RE-PUMP1B	FAILURE TO RESTORE PSW PUMP 1B	A	1.01	N
B21-XHE-FO-6OPEN	OPERATOR FAILS TO OPEN 6/10 SRVS	C	1.01	N
E50-XHE-FO-EQU	OPERATOR FAILS TO ACTUATE GDCS	C	1.01	N
N21-XHE-FO-FWRERUN	OPERATOR FAILS TO RESTART FDW AFTER RUNBACK - ATWS	C	1	N
G21-XHE-FO-RSPC	OPERATOR FAILS TO RECOG. NEED FOR SPC	C	1	N
U43-XHE-FO-2ND	OPERATOR FAILS TO ALIGN FPS CROSSTIE	C	1	N
G31-XHE-FO-SDCATWS	OPERATOR FAILS TO ACTUATE SDC MODE ATWS	C	1	N
R21-TRN-RE-FODG1A	FAILURE TO RESTORE FUEL OIL TRANSFER TRAIN 1 FOR DG-A	A	1	N
R21-TRN-RE-FODG1B	FAILURE TO RESTORE FUEL OIL TRANSFER TRAIN 1 FOR DG-B	A	1	N
R21-TRN-RE-FODG2A	FAILURE TO RESTORE FUEL OIL TRANSFER TRAIN 2 FOR DG-A	A	1	N
R21-TRN-RE-FODG2B	FAILURE TO RESTORE FUEL OIL TRANSFER TRAIN 2 FOR DG-B	A	1	N
G21-XHE-FO-LPCI	OPERATOR FAILS TO ALIGN AND ACTUATE FAPCS IN LPCI MODE	C	1	N

Table 17.7-4

Internal Events LRF At-Power Operator Actions - FV

BASIC EVENT	DESCRIPTION	HRA TYPE	FV	THRESHOLD
XXX-XHE-FO-LPMAKEUP	OP. FAILS TO RECOG. NEED FOR LOW PRESS. MAKEUP AFTER DEPRESSURIZATION	C	7.85E-01	Y
XXX-XHE-FO-ICPCCS	OPERATOR FAILS TO RECOGNIZE THE NEED TO MAKEUP ICS/PCCS POOL LEVEL.	C	5.93E-02	Y
R21-XHE-FO-ADG	OPERATOR FAILS TO CONTROL THE LOADS ON ANCILLARY DG BUSES	C	1.39E-02	Y
U43-XHE-FO-PMPTRK	OPERATOR FAIL TO SUPPLY WATER FROM PUMP TRUCKS	C	1.21E-02	Y
U43-XHE-FO-MAKEUP	OPERATOR FAILS TO ACTUATE U43 IN MAKE UP MODE	C	1.12E-02	Y
XXX-XHE-FO-DEPRESS	OPERATOR FAILS TO RECOGNIZE NEED OF DEPRESSURIZATION	C	9.63E-03	N
R13-XHE-FO-ADG	OPERATOR FAILS TO ALIGN THE ADG BUSES TO UPS BUSES	C	8.25E-03	N
C71-XHE-FO-SCRAM	OPERATOR FAILS TO PERFORM MANUAL SCRAM	C	7.51E-03	N
C12-BV_-RE-F013A	MISPOSITION OF VALVE F013A	A	7.02E-03	N
C12-BV_-RE-F013B	MISPOSITION OF VALVE F013B	A	7.02E-03	N
C12-BV_-RE-F015A	MISPOSITION OF VALVE F015A	A	7.02E-03	N
C12-BV_-RE-F015B	MISPOSITION OF VALVE F015B	A	7.02E-03	N
U43-XHE-FO-LPCI	OPERATOR FAILS TO ACTUATE U43 IN LPCI MODE	C	6.70E-03	N
C12-XHE-FO-LL-INJ	OPERATOR FAILS TO ACTUATE INJECTION BYPASS	C	4.88E-03	N
G31-XHE-FO-MIBOC	OPERATOR FAILS TO ISOLATE RWCU BREAK OUTSIDE CONTAINMENT	C	1.81E-03	N
P21-TRN-RE-HX1A	FAILURE TO RESTORE RCCW TRAIN 1A HX	A	1.43E-03	N
P21-TRN-RE-HX1B	FAILURE TO RESTORE RCCW TRAIN 1B HX	A	1.43E-03	N
P21-TRN-RE-HX2A	FAILURE TO RESTORE RCCW TRAIN 2A HX	A	1.43E-03	N
P21-TRN-RE-HX2B	FAILURE TO RESTORE RCCW TRAIN 2B HX	A	1.43E-03	N
P21-TRN-RE-HX3A	FAILURE TO RESTORE RCCW TRAIN 3A HX	A	1.43E-03	N
P21-TRN-RE-HX3B	FAILURE TO RESTORE RCCW TRAIN 3B HX	A	1.43E-03	N
P21-TRN-RE-PUMP1A	FAILURE TO RESTORE RCCW TRAIN 1A PUMP	A	1.43E-03	N
P21-TRN-RE-PUMP1B	FAILURE TO RESTORE RCCW TRAIN 1B PUMP	A	1.43E-03	N
P21-TRN-RE-PUMP2A	FAILURE TO RESTORE RCCW TRAIN 2A PUMP	A	1.43E-03	N
P21-TRN-RE-PUMP2B	FAILURE TO RESTORE RCCW TRAIN 2B PUMP	A	1.43E-03	N
P21-TRN-RE-PUMP3A	FAILURE TO RESTORE RCCW TRAIN 3A PUMP	A	1.43E-03	N
P21-TRN-RE-PUMP3B	FAILURE TO RESTORE RCCW TRAIN 3B PUMP	A	1.43E-03	N

Table 17.7-4

Internal Events LRF At-Power Operator Actions - FV

BASIC EVENT	DESCRIPTION	HRA TYPE	FV	THRESHOLD
B32-XHE-FO-VENT	OPERATOR FAILS TO OPEN VENT	C	1.36E-03	N
R21-TRN-RE-FOADGA	FAILURE TO RESTORE FUEL OIL TRANSFER TRAIN FOR ADG-A	A	1.11E-03	N
R21-TRN-RE-FOADGB	FAILURE TO RESTORE FUEL OIL TRANSFER TRAIN FOR ADG-A	A	1.11E-03	N
C12-BV_-RE-F018A	MISPOSITION OF VALVE F018A	A	8.09E-04	N
C12-BV_-RE-F021A	MISPOSITION OF VALVE F021A	A	8.09E-04	N
C12-BV_-RE-F003B	MISPOSITION OF VALVE F003B	A	5.00E-04	N
C12-BV_-RE-F018B	MISPOSITION OF VALVE FO18B	A	5.00E-04	N
C12-BV_-RE-F021B	MISPOSITION OF VALVE F021B	A	5.00E-04	N
T10-XHE-FO-CONTVENT	OPERATOR FAILS TO ACTUATE CONTAINMENT VENTING	C	4.50E-04	N
P51-XHE-P21-BU	OPERATOR ACTION TO CONNECT ALTERNATE COOLING GIVEN RCCW FAILED	C	2.79E-04	N
XXX-XHE-FO-RPVLDE	OP. FAILS TO RECOG. OR CHECK THE RPV DECREASING LEVEL	C	2.58E-04	N
P54-BV_-RE-F013A	RESTERATION ERROR OF F013A	A	1.59E-04	N
P41-TRN-RE-PUMP2A	FAILURE TO RESTORE PSW PUMP 2A	A	1.47E-04	N
P41-TRN-RE-PUMP2B	FAILURE TO RESTORE PSW PUMP 2B	A	1.47E-04	N
N21-XHE-FO-FWRERUN	OPERATOR FAILS TO RESTART FDW AFTER RUNBACK - ATWS	C	1.10E-04	N
G21-XHE-FO-RSPC	OPERATOR FAILS TO RECOG. NEED FOR SPC	C	6.29E-05	N
U43-XHE-FO-2ND	OPERATOR FAILS TO ALIGN FPS CROSSTIE	C	5.56E-05	N
P41-TRN-RE-PUMP1A	FAILURE TO RESTORE PSW PUMP 1A	A	4.31E-05	N
P41-TRN-RE-PUMP1B	FAILURE TO RESTORE PSW PUMP 1B	A	4.31E-05	N
G31-XHE-FO-SDCATWS	OPERATOR FAILS TO ACTUATE SDC MODE ATWS	C	3.27E-05	N
R21-TRN-RE-FODG1A	FAILURE TO RESTORE FUEL OIL TRANSFER TRAIN 1 FOR DG-A	A	2.39E-05	N
R21-TRN-RE-FODG1B	FAILURE TO RESTORE FUEL OIL TRANSFER TRAIN 1 FOR DG-B	A	2.39E-05	N
R21-TRN-RE-FODG2A	FAILURE TO RESTORE FUEL OIL TRANSFER TRAIN 2 FOR DG-A	A	2.39E-05	N
R21-TRN-RE-FODG2B	FAILURE TO RESTORE FUEL OIL TRANSFER TRAIN 2 FOR DG-B	A	2.39E-05	N
B21-XHE-FO-6OPEN	OPERATOR FAILS TO OPEN 6/10 SRVS	C	1.86E-05	N
E50-XHE-FO-EQU	OPERATOR FAILS TO ACTUATE GDCS	C	1.53E-05	N
G21-XHE-FO-LPCI	OPERATOR FAILS TO ALIGN AND ACTUATE FAPCS IN LPCI MODE	C	7.13E-06	N

Table 17.7-5

Internal Events CDF & LRF Shutdown Operator Actions - RAW

BASIC EVENT	DESCRIPTION	HRA TYPE	RAW	THRESHOLD
XXX-XHE-FO-LPMAKEUP	OP. FAILS TO RECOG. NEED FOR LOW PRESS. MAKEUP AFTER DEPRESSURIZATION	C	20.14	Y
C12-XHE-FO-LEVEL2	OPERATOR FAILS TO BACK-UP CRD ACTUATION	C	2.92	N
U43-XHE-FO-LPCI	OPERATOR FAILS TO ACTUATE U43 IN LPCI MODE	C	2.18	N
R21-XHE-FO-ADG	OPERATOR FAILS TO CONTROL THE LOADS ON ANCILLARY DG BUSES	C	2.05	N
C12-BV_-RE-F018A	MISPOSITION OF VALVE F018A	A	1.74	N
C12-BV_-RE-F021A	MISPOSITION OF VALVE F021A	A	1.74	N
C12-BV_-RE-F003B	MISPOSITION OF VALVE F003B	A	1.72	N
C12-BV_-RE-F018B	MISPOSITION OF VALVE FO18B	A	1.72	N
C12-BV_-RE-F021B	MISPOSITION OF VALVE F021B	A	1.72	N
P21-TRN-RE-HX1A	FAILURE TO RESTORE RCCW TRAIN 1A HX	A	1.29	N
P21-TRN-RE-HX2A	FAILURE TO RESTORE RCCW TRAIN 2A HX	A	1.29	N
P21-TRN-RE-HX3A	FAILURE TO RESTORE RCCW TRAIN 3A HX	A	1.29	N
P21-TRN-RE-PUMP1A	FAILURE TO RESTORE RCCW TRAIN 1A PUMP	A	1.29	N
P21-TRN-RE-PUMP2A	FAILURE TO RESTORE RCCW TRAIN 2A PUMP	A	1.29	N
P21-TRN-RE-PUMP3A	FAILURE TO RESTORE RCCW TRAIN 3A PUMP	A	1.29	N
P21-TRN-RE-HX1B	FAILURE TO RESTORE RCCW TRAIN 1B HX	A	1.26	N
P21-TRN-RE-HX2B	FAILURE TO RESTORE RCCW TRAIN 2B HX	A	1.26	N

Table 17.7-5

Internal Events CDF & LRF Shutdown Operator Actions - RAW

BASIC EVENT	DESCRIPTION	HRA TYPE	RAW	THRESHOLD
P21-TRN-RE-HX3B	FAILURE TO RESTORE RCCW TRAIN 3B HX	A	1.26	N
P21-TRN-RE-PUMP1B	FAILURE TO RESTORE RCCW TRAIN 1B PUMP	A	1.26	N
P21-TRN-RE-PUMP2B	FAILURE TO RESTORE RCCW TRAIN 2B PUMP	A	1.26	N
P21-TRN-RE-PUMP3B	FAILURE TO RESTORE RCCW TRAIN 3B PUMP	A	1.26	N
P54-BV_-RE-F013A	RESTERATION ERROR OF F013A	A	1.2	N
C12-BV_-RE-F013A	MISPOSITION OF VALVE F013A	A	1.19	N
C12-BV_-RE-F013B	MISPOSITION OF VALVE F013B	A	1.19	N
C12-BV_-RE-F015A	MISPOSITION OF VALVE F015A	A	1.19	N
C12-BV_-RE-F015B	MISPOSITION OF VALVE F015B	A	1.19	N
P41-TRN-RE-PUMP1B	FAILURE TO RESTORE PSW PUMP 1B	A	1.13	N
P41-TRN-RE-PUMP2B	FAILURE TO RESTORE PSW PUMP 2B	A	1.13	N
P41-TRN-RE-PUMP1A	FAILURE TO RESTORE PSW PUMP 1A	A	1.12	N
P41-TRN-RE-PUMP2A	FAILURE TO RESTORE PSW PUMP 2A	A	1.12	N
G31-TRN-RE-TRAINB	RESTORATION ERRORS RWCU/SDC TRAIN B	A	1.11	N
P52-XHE-CC-0001-B	OPERATOR FAILS TO OPEN STANDBY TRAIN AOV 0001-B	C	1.11	N
R21-TRN-RE-FOADGA	FAILURE TO RESTORE FUEL OIL TRANSFER TRAIN FOR ADG-A	A	1.11	N
G21-XHE-FO-LPCI	OPERATOR FAILS TO ALIGN AND ACTUATE FAPCS IN LPCI MODE	C	1.1	N
R21-TRN-RE-FOADGB	FAILURE TO RESTORE FUEL OIL TRANSFER TRAIN FOR ADG-A	A	1.1	N
R21-XHE-FO-ADGCROSS	OPERATOR FAILS TO CROSS-TIE THE ANCILLARY DG BUSES	C	1.1	N

Table 17.7-5

Internal Events CDF & LRF Shutdown Operator Actions - RAW

BASIC EVENT	DESCRIPTION	HRA TYPE	RAW	THRESHOLD
G31-XHE-FO-MIBOC	OPERATOR FAILS TO ISOLATE RWCU BREAK OUTSIDE CONTAINMENT	C	1.09	N
B32-XHE-FO-VENT	OPERATOR FAILS TO OPEN VENT	C	1.01	N
C12-XHE-FO-LL-INJ	OPERATOR FAILS TO ACTUATE INJECTION BYPASS	C	1	N
E50-XHE-FO-EQU	OPERATOR FAILS TO ACTUATE GDCS	C	1	N
E50-XHE-FO-GDCS	OPERATOR FAILS TO ACTUATE GDCS	C	1	N
P51-CMP-RE-0001-B	SERVICE AIR SYSTEM COMPRESSOR RESTORATION ERROR	A	1	N
P51-CMP-RE-0001-C	SERVICE AIR SYSTEM COMPRESSOR RESTORATION ERROR	A	1	N
P51-CMP-RE-0001-D	SERVICE AIR SYSTEM COMPRESSOR RESTORATION ERROR	A	1	N
P51-XHE-FO-0001-CD	OPERATOR FAILS TO ALIGN ONE BACKUP CMP TO STANDBY	C	1	N
P51-XHE-FO-CMP	OPERATOR FAIL TO ISOLATE ONE COMPRESSOR TRAIN GIVEN OTHER FAILED	C	1	N
R21-TRN-RE-FODG1A	FAILURE TO RESTORE FUEL OIL TRANSFER TRAIN 1 FOR DG-A	A	1	N
R21-TRN-RE-FODG1B	FAILURE TO RESTORE FUEL OIL TRANSFER TRAIN 1 FOR DG-B	A	1	N
R21-TRN-RE-FODG2A	FAILURE TO RESTORE FUEL OIL TRANSFER TRAIN 2 FOR DG-A	A	1	N
R21-TRN-RE-FODG2B	FAILURE TO RESTORE FUEL OIL TRANSFER TRAIN 2 FOR DG-B	A	1	N
XXX-XHE-FO-RPVLDE	OP. FAILS TO RECOG. OR CHECK THE RPV DECREASING LEVEL	C	1	N

Table 17.7-6

Internal Events CDF & LRF Shutdown Operator Actions - FV

BASIC EVENT	DESCRIPTION	HRA TYPE	FV	THRESHOLD
XXX-XHE-FO-LPMAKEUP	OP. FAILS TO RECOG. NEED FOR LOW PRESS. MAKEUP AFTER DEPRESSURIZATION	C	3.13E-01	Y
C12-XHE-FO-LEVEL2	OPERATOR FAILS TO BACK-UP CRD ACTUATION	C	6.38E-02	Y
R21-XHE-FO-ADG	OPERATOR FAILS TO CONTROL THE LOADS ON ANCILLARY DG BUSES	C	1.73E-02	Y
C12-BV_-RE-F013A	MISPOSITION OF VALVE F013A	A	9.58E-03	N
C12-BV_-RE-F013B	MISPOSITION OF VALVE F013B	A	9.58E-03	N
C12-BV_-RE-F015A	MISPOSITION OF VALVE F015A	A	9.58E-03	N
C12-BV_-RE-F015B	MISPOSITION OF VALVE F015B	A	9.58E-03	N
C12-BV_-RE-F018A	MISPOSITION OF VALVE F018A	A	9.09E-03	N
C12-BV_-RE-F021A	MISPOSITION OF VALVE F021A	A	9.09E-03	N
C12-BV_-RE-F003B	MISPOSITION OF VALVE F003B	A	8.82E-03	N
C12-BV_-RE-F018B	MISPOSITION OF VALVE FO18B	A	8.82E-03	N
C12-BV_-RE-F021B	MISPOSITION OF VALVE F021B	A	8.82E-03	N
R21-TRN-RE-FOADGA	FAILURE TO RESTORE FUEL OIL TRANSFER TRAIN FOR ADG-A	A	2.75E-03	N
B32-XHE-FO-VENT	OPERATOR FAILS TO OPEN VENT	C	2.56E-03	N
R21-TRN-RE-FOADGB	FAILURE TO RESTORE FUEL OIL TRANSFER TRAIN FOR ADG-A	A	2.53E-03	N
P21-TRN-RE-HX1A	FAILURE TO RESTORE RCCW TRAIN 1A HX	A	2.38E-03	N
P21-TRN-RE-HX2A	FAILURE TO RESTORE RCCW TRAIN 2A HX	A	2.38E-03	N
P21-TRN-RE-HX3A	FAILURE TO RESTORE RCCW TRAIN 3A HX	A	2.38E-03	N
P21-TRN-RE-PUMP1A	FAILURE TO RESTORE RCCW TRAIN 1A PUMP	A	2.38E-03	N
P21-TRN-RE-PUMP2A	FAILURE TO RESTORE RCCW TRAIN 2A PUMP	A	2.38E-03	N
P21-TRN-RE-PUMP3A	FAILURE TO RESTORE RCCW TRAIN 3A PUMP	A	2.38E-03	N
P21-TRN-RE-HX1B	FAILURE TO RESTORE RCCW TRAIN 1B HX	A	2.15E-03	N

Table 17.7-6

Internal Events CDF & LRF Shutdown Operator Actions - FV

BASIC EVENT	DESCRIPTION	HRA TYPE	FV	THRESHOLD
P21-TRN-RE-HX2B	FAILURE TO RESTORE RCCW TRAIN 2B HX	A	2.15E-03	N
P21-TRN-RE-HX3B	FAILURE TO RESTORE RCCW TRAIN 3B HX	A	2.15E-03	N
P21-TRN-RE-PUMP1B	FAILURE TO RESTORE RCCW TRAIN 1B PUMP	A	2.15E-03	N
P21-TRN-RE-PUMP2B	FAILURE TO RESTORE RCCW TRAIN 2B PUMP	A	2.15E-03	N
P21-TRN-RE-PUMP3B	FAILURE TO RESTORE RCCW TRAIN 3B PUMP	A	2.15E-03	N
P52-XHE-CC-0001-B	OPERATOR FAILS TO OPEN STANDBY TRAIN AOV 0001-B	C	1.97E-03	N
U43-XHE-FO-LPCI	OPERATOR FAILS TO ACTUATE U43 IN LPCI MODE	C	1.93E-03	N
G31-XHE-FO-MIBOC	OPERATOR FAILS TO ISOLATE RWCU BREAK OUTSIDE CONTAINMENT	C	1.64E-03	N
R21-XHE-FO-ADGCROSS	OPERATOR FAILS TO CROSS-TIE THE ANCILLARY DG BUSES	C	1.59E-03	N
P41-TRN-RE-PUMP2B	FAILURE TO RESTORE PSW PUMP 2B	A	1.05E-03	N
P41-TRN-RE-PUMP1B	FAILURE TO RESTORE PSW PUMP 1B	A	1.04E-03	N
P41-TRN-RE-PUMP2A	FAILURE TO RESTORE PSW PUMP 2A	A	1.02E-03	N
P41-TRN-RE-PUMP1A	FAILURE TO RESTORE PSW PUMP 1A	A	1.01E-03	N
G31-TRN-RE-TRAINB	RESTORATION ERRORS RWCU/SDC TRAIN B	A	8.68E-04	N
P54-BV_-RE-F013A	RESTERATION ERROR OF F013A	A	8.23E-04	N
G21-XHE-FO-LPCI	OPERATOR FAILS TO ALIGN AND ACTUATE FAPCS IN LPCI MODE	C	1.70E-04	N
R21-TRN-RE-FODG1A	FAILURE TO RESTORE FUEL OIL TRANSFER TRAIN 1 FOR DG-A	A	9.00E-05	N
R21-TRN-RE-FODG2A	FAILURE TO RESTORE FUEL OIL TRANSFER TRAIN 2 FOR DG-A	A	9.00E-05	N

Table 17.7-6

Internal Events CDF & LRF Shutdown Operator Actions - FV

BASIC EVENT	DESCRIPTION	HRA TYPE	FV	THRESHOLD
R21-TRN-RE-FODG1B	FAILURE TO RESTORE FUEL OIL TRANSFER TRAIN 1 FOR DG-B	A	8.06E-05	N
R21-TRN-RE-FODG2B	FAILURE TO RESTORE FUEL OIL TRANSFER TRAIN 2 FOR DG-B	A	8.06E-05	N
P51-XHE-FO-0001-CD	OPERATOR FAILS TO ALIGN ONE BACKUP CMP TO STANDBY	C	5.09E-05	N
P51-CMP-RE-0001-B	SERVICE AIR SYSTEM COMPRESSOR RESTORATION ERROR	A	1.73E-05	N
P51-CMP-RE-0001-D	SERVICE AIR SYSTEM COMPRESSOR RESTORATION ERROR	A	8.98E-06	N
XXX-XHE-FO-RPVLDE	OP. FAILS TO RECOG. OR CHECK THE RPV DECREASING LEVEL	C	8.93E-06	N
P51-CMP-RE-0001-C	SERVICE AIR SYSTEM COMPRESSOR RESTORATION ERROR	A	7.30E-06	N
C12-XHE-FO-LL-INJ	OPERATOR FAILS TO ACTUATE INJECTION BYPASS	C	3.98E-06	N
E50-XHE-FO-EQU	OPERATOR FAILS TO ACTUATE GDCS	C	8.25E-07	N
E50-XHE-FO-GDCS	OPERATOR FAILS TO ACTUATE GDCS	C	8.25E-07	N
P51-XHE-FO-CMP	OPERATOR FAIL TO ISOLATE ONE COMPRESSOR TRAIN GIVEN OTHER FAILED	C	3.14E-07	N

Table 17.7-7

Fire CDF At-Power Operator Actions - RAW

BASIC EVENT	DESCRIPTION	HRA TYPE	RAW	THRESHOLD
XXX-XHE-FO-ICPCCS	OPERATOR FAILS TO RECOGNIZE THE NEED TO MAKEUP ICS/PCCS POOL LEVEL.	C	6.63	Y
XXX-XHE-FO-DEPRESS	OPERATOR FAILS TO RECOGNIZE NEED OF DEPRESSURIZATION	C	1.99	N
B21-XHE-FO-6OPEN	OPERATOR FAILS TO OPEN 6/10 SRVS	C	1.98	N
C71-XHE-FO-SCRAM	OPERATOR FAILS TO PERFORM MANUAL SCRAM	C	1.84	N
XXX-XHE-FO-LPMAKEUP	OP. FAILS TO RECOG. NEED FOR LOW PRESS. MAKEUP AFTER DEPRESSURIZATION	C	1.78	N
C12-BV_-RE-F003B	MISPOSITION OF VALVE F003B	A	1.71	N
C12-BV_-RE-F018B	MISPOSITION OF VALVE FO18B	A	1.71	N
C12-BV_-RE-F021B	MISPOSITION OF VALVE F021B	A	1.71	N
C12-BV_-RE-F013B	MISPOSITION OF VALVE F013B	A	1.57	N
C12-BV_-RE-F015B	MISPOSITION OF VALVE F015B	A	1.57	N
P41-TRN-RE-PUMP2B	FAILURE TO RESTORE PSW PUMP 2B	A	1.55	N
C12-BV_-RE-F018A	MISPOSITION OF VALVE F018A	A	1.25	N
C12-BV_-RE-F021A	MISPOSITION OF VALVE F021A	A	1.25	N
P21-TRN-RE-HX2B	FAILURE TO RESTORE RCCW TRAIN 2B HX	A	1.19	N
P21-TRN-RE-HX3B	FAILURE TO RESTORE RCCW TRAIN 3B HX	A	1.19	N
P21-TRN-RE-PUMP2B	FAILURE TO RESTORE RCCW TRAIN 2B PUMP	A	1.19	N
P21-TRN-RE-PUMP3B	FAILURE TO RESTORE RCCW TRAIN 3B PUMP	A	1.19	N
P21-TRN-RE-HX1A	FAILURE TO RESTORE RCCW TRAIN 1A HX	A	1.19	N
P21-TRN-RE-HX2A	FAILURE TO RESTORE RCCW TRAIN 2A HX	A	1.19	N
P21-TRN-RE-HX3A	FAILURE TO RESTORE RCCW TRAIN 3A HX	A	1.19	N
P21-TRN-RE-PUMP1A	FAILURE TO RESTORE RCCW TRAIN 1A PUMP	A	1.19	N
P21-TRN-RE-PUMP2A	FAILURE TO RESTORE RCCW TRAIN 2A PUMP	A	1.19	N
P21-TRN-RE-PUMP3A	FAILURE TO RESTORE RCCW TRAIN 3A PUMP	A	1.19	N
P21-TRN-RE-HX1B	FAILURE TO RESTORE RCCW TRAIN 1B HX	A	1.19	N
P21-TRN-RE-PUMP1B	FAILURE TO RESTORE RCCW TRAIN 1B PUMP	A	1.19	N
B32-XHE-FO-VENT	OPERATOR FAILS TO OPEN VENT	C	1.16	N
U43-XHE-FO-MAKEUP	OPERATOR FAILS TO ACTUATE U43 IN MAKE UP MODE	C	1.12	N

Table 17.7-7

Fire CDF At-Power Operator Actions - RAW

BASIC EVENT	DESCRIPTION	HRA TYPE	RAW	THRESHOLD
P41-TRN-RE-PUMP2A	FAILURE TO RESTORE PSW PUMP 2A	A	1.12	N
C12-BV_-RE-F013A	MISPOSITION OF VALVE F013A	A	1.11	N
C12-BV_-RE-F015A	MISPOSITION OF VALVE F015A	A	1.11	N
C12-XHE-FO-LL-INJ	OPERATOR FAILS TO ACTUATE INJECTION BYPASS	C	1.1	N
U43-XHE-FO-LPCI	OPERATOR FAILS TO ACTUATE U43 IN LPCI MODE	C	1.1	N
U43-XHE-FO-PMPTRK	OPERATOR FAIL TO SUPPLY WATER FROM PUMP TRUCKS	C	1.08	N
N21-XHE-FO-FWRERUN	OPERATOR FAILS TO RESTART FDW AFTER RUNBACK - ATWS	C	1.07	N
P54-BV_-RE-F013A	RESTERATION ERROR OF F013A	A	1.06	N
R21-XHE-FO-ADG	OPERATOR FAILS TO CONTROL THE LOADS ON ANCILLARY DG BUSES	C	1.05	N
P22-TRN-RE-PUMP1C	FAILURE TO RESTORE TCCW PUMP 1C	A	1.04	N
R13-XHE-FO-ADG	OPERATOR FAILS TO ALIGN THE ADG BUSES TO UPS BUSES	C	1.03	N
P52-XHE-CC-0001-B	OPERATOR FAILS TO OPEN STANDBY TRAIN AOV 0001-B	C	1.02	N
XXX-XHE-FO-RPVLDE	OP. FAILS TO RECOG. OR CHECK THE RPV DECREASING LEVEL	C	1.02	N
C12-XHE-FO-LEVEL2	OPERATOR FAILS TO BACK-UP CRD ACTUATION	C	1.01	N
E50-XHE-FO-EQU	OPERATOR FAILS TO ACTUATE GDCS	C	1.01	N
R21-TRN-RE-FODG1A	FAILURE TO RESTORE FUEL OIL TRANSFER TRAIN 1 FOR DG-A	A	1	N
R21-TRN-RE-FODG2A	FAILURE TO RESTORE FUEL OIL TRANSFER TRAIN 2 FOR DG-A	A	1	N
R21-TRN-RE-FODG1B	FAILURE TO RESTORE FUEL OIL TRANSFER TRAIN 1 FOR DG-B	A	1	N
R21-TRN-RE-FODG2B	FAILURE TO RESTORE FUEL OIL TRANSFER TRAIN 2 FOR DG-B	A	1	N
G31-XHE-FO-SDCATWS	OPERATOR FAILS TO ACTUATE SDC MODE ATWS	C	1	N
R21-TRN-RE-FOADGA	FAILURE TO RESTORE FUEL OIL TRANSFER TRAIN FOR ADG-A	A	1	N
R21-TRN-RE-FOADGB	FAILURE TO RESTORE FUEL OIL TRANSFER TRAIN FOR ADG-A	A	1	N
T10-XHE-FO-CONTVENT	OPERATOR FAILS TO ACTUATE CONTAINMENT VENTING	C	1	N
G31-XHE-FO-SDC	OPERATOR FAILS TO ACTUATE SDC MODE NO MSL LOCA OUSIDE CONTAINMENT NO SLCS	C	1	N
P51-XHE-P21-BU	OPERATOR ACTION TO CONNECT ALTERNATE COOLING GIVEN RCCW FAILED	C	1	N
U43-XHE-FO-2ND	OPERATOR FAILS TO ALIGN FPS CROSSTIE	C	1	N
G31-TRN-RE-TRAINB	RESTORATION ERRORS RWCU/SDC TRAIN B	A	1	N
P41-TRN-RE-PUMP1A	FAILURE TO RESTORE PSW PUMP 1A	A	1	N

Table 17.7-7

Fire CDF At-Power Operator Actions - RAW

BASIC EVENT	DESCRIPTION	HRA TYPE	RAW	THRESHOLD
N21-XHE-FO-CONDMU	FAILURE TO MANUALLY OPEN CONDENSER MAKEUP VALVES	C	1	**N**
P51-XHE-FO-0001-CD	OPERATOR FAILS TO ALIGN ONE BACKUP CMP TO STANDBY	C	1	**N**
P41-TRN-RE-PUMP1B	FAILURE TO RESTORE PSW PUMP 1B	A	1	**N**
P51-CMP-RE-0001-B	SERVICE AIR SYSTEM COMPRESSOR RESTORATION ERROR	A	1	**N**
G21-XHE-FO-RSPC	OPERATOR FAILS TO RECOG. NEED FOR SPC	C	1	**N**
P51-CMP-RE-0001-D	SERVICE AIR SYSTEM COMPRESSOR RESTORATION ERROR	A	1	**N**
G21-XHE-FO-LPCI	OPERATOR FAILS TO ALIGN AND ACTUATE FAPCS IN LPCI MODE	C	1	**N**
R21-XHE-FO-ADGCROSS	OPERATOR FAILS TO CROSS-TIE THE ANCILLARY DG BUSES	C	1	**N**
P51-XHE-FO-CMP	OPERATOR FAIL TO ISOLATE ONE COMPRESSOR TRAIN GIVEN OTHER FAILED	C	1	**N**
C41-XHE-FO-EQU	OPERATOR FAILS TO ACTUATE SLCS	C	1	**N**
P51-CMP-RE-0001-C	SERVICE AIR SYSTEM COMPRESSOR RESTORATION ERROR	A	1	**N**

Table 17.7-8

Fire CDF At-Power Operator Actions - FV

BASIC EVENT	DESCRIPTION	HRA TYPE	FV	THRESHOLD
XXX-XHE-FO-DEPRESS	OPERATOR FAILS TO RECOGNIZE NEED OF DEPRESSURIZATION	C	1.91E-01	Y
XXX-XHE-FO-LPMAKEUP	OP. FAILS TO RECOG. NEED FOR LOW PRESS. MAKEUP AFTER DEPRESSURIZATION	C	1.50E-01	Y
C71-XHE-FO-SCRAM	OPERATOR FAILS TO PERFORM MANUAL SCRAM	C	9.33E-02	**Y**
B32-XHE-FO-VENT	OPERATOR FAILS TO OPEN VENT	C	3.39E-02	**Y**
C12-BV_-RE-F013B	MISPOSITION OF VALVE F013B	A	2.88E-02	**Y**
C12-BV_-RE-F015B	MISPOSITION OF VALVE F015B	A	2.88E-02	**Y**
N21-XHE-FO-FWRERUN	OPERATOR FAILS TO RESTART FDW AFTER RUNBACK - ATWS	C	1.40E-02	**Y**
XXX-XHE-FO-ICPCCS	OPERATOR FAILS TO RECOGNIZE THE NEED TO MAKEUP ICS/PCCS POOL LEVEL.	C	9.14E-03	**N**
C12-BV_-RE-F003B	MISPOSITION OF VALVE F003B	A	8.73E-03	**N**
C12-BV_-RE-F018B	MISPOSITION OF VALVE FO18B	A	8.73E-03	**N**
C12-BV_-RE-F021B	MISPOSITION OF VALVE F021B	A	8.73E-03	**N**
C12-BV_-RE-F013A	MISPOSITION OF VALVE F013A	A	5.83E-03	**N**
C12-BV_-RE-F015A	MISPOSITION OF VALVE F015A	A	5.83E-03	**N**
P41-TRN-RE-PUMP2B	FAILURE TO RESTORE PSW PUMP 2B	A	4.45E-03	**N**
C12-XHE-FO-LL-INJ	OPERATOR FAILS TO ACTUATE INJECTION BYPASS	C	3.33E-03	**N**
C12-BV_-RE-F018A	MISPOSITION OF VALVE F018A	A	3.07E-03	**N**
C12-BV_-RE-F021A	MISPOSITION OF VALVE F021A	A	3.07E-03	**N**
U43-XHE-FO-PMPTRK	OPERATOR FAIL TO SUPPLY WATER FROM PUMP TRUCKS	C	2.13E-03	**N**
U43-XHE-FO-MAKEUP	OPERATOR FAILS TO ACTUATE U43 IN MAKE UP MODE	C	2.05E-03	**N**
B21-XHE-FO-6OPEN	OPERATOR FAILS TO OPEN 6/10 SRVS	C	1.59E-03	**N**
P21-TRN-RE-HX2B	FAILURE TO RESTORE RCCW TRAIN 2B HX	A	1.57E-03	**N**
P21-TRN-RE-HX3B	FAILURE TO RESTORE RCCW TRAIN 3B HX	A	1.57E-03	**N**
P21-TRN-RE-PUMP2B	FAILURE TO RESTORE RCCW TRAIN 2B PUMP	A	1.56E-03	**N**
P21-TRN-RE-PUMP3B	FAILURE TO RESTORE RCCW TRAIN 3B PUMP	A	1.56E-03	**N**
P21-TRN-RE-HX1A	FAILURE TO RESTORE RCCW TRAIN 1A HX	A	1.55E-03	**N**

Table 17.7-8

Fire CDF At-Power Operator Actions - FV

BASIC EVENT	DESCRIPTION	HRA TYPE	FV	THRESHOLD
P21-TRN-RE-HX2A	FAILURE TO RESTORE RCCW TRAIN 2A HX	A	1.55E-03	N
P21-TRN-RE-HX3A	FAILURE TO RESTORE RCCW TRAIN 3A HX	A	1.55E-03	N
P21-TRN-RE-PUMP1A	FAILURE TO RESTORE RCCW TRAIN 1A PUMP	A	1.55E-03	N
P21-TRN-RE-PUMP2A	FAILURE TO RESTORE RCCW TRAIN 2A PUMP	A	1.55E-03	N
P21-TRN-RE-PUMP3A	FAILURE TO RESTORE RCCW TRAIN 3A PUMP	A	1.55E-03	N
P21-TRN-RE-HX1B	FAILURE TO RESTORE RCCW TRAIN 1B HX	A	1.51E-03	N
P21-TRN-RE-PUMP1B	FAILURE TO RESTORE RCCW TRAIN 1B PUMP	A	1.51E-03	N
P41-TRN-RE-PUMP2A	FAILURE TO RESTORE PSW PUMP 2A	A	9.48E-04	N
R21-XHE-FO-ADG	OPERATOR FAILS TO CONTROL THE LOADS ON ANCILLARY DG BUSES	C	8.40E-04	N
R13-XHE-FO-ADG	OPERATOR FAILS TO ALIGN THE ADG BUSES TO UPS BUSES	C	4.60E-04	N
C12-XHE-FO-LEVEL2	OPERATOR FAILS TO BACK-UP CRD ACTUATION	C	4.53E-04	N
P52-XHE-CC-0001-B	OPERATOR FAILS TO OPEN STANDBY TRAIN AOV 0001-B	C	4.33E-04	N
P22-TRN-RE-PUMP1C	FAILURE TO RESTORE TCCW PUMP 1C	A	3.37E-04	N
XXX-XHE-FO-RPVLDE	OP. FAILS TO RECOG. OR CHECK THE RPV DECREASING LEVEL	C	2.47E-04	N
P54-BV_-RE-F013A	RESTERATION ERROR OF F013A	A	2.43E-04	N
U43-XHE-FO-LPCI	OPERATOR FAILS TO ACTUATE U43 IN LPCI MODE	C	1.68E-04	N
R21-TRN-RE-FODG1A	FAILURE TO RESTORE FUEL OIL TRANSFER TRAIN 1 FOR DG-A	A	9.72E-05	N
R21-TRN-RE-FODG2A	FAILURE TO RESTORE FUEL OIL TRANSFER TRAIN 2 FOR DG-A	A	9.72E-05	N
R21-TRN-RE-FODG1B	FAILURE TO RESTORE FUEL OIL TRANSFER TRAIN 1 FOR DG-B	A	9.44E-05	N
R21-TRN-RE-FODG2B	FAILURE TO RESTORE FUEL OIL TRANSFER TRAIN 2 FOR DG-B	A	9.44E-05	N
G31-XHE-FO-SDCATWS	OPERATOR FAILS TO ACTUATE SDC MODE ATWS	C	8.37E-05	N
R21-TRN-RE-FOADGA	FAILURE TO RESTORE FUEL OIL TRANSFER TRAIN FOR ADG-A	A	7.40E-05	N
R21-TRN-RE-FOADGB	FAILURE TO RESTORE FUEL OIL TRANSFER TRAIN FOR ADG-A	A	7.40E-05	N
T10-XHE-FO-CONTVENT	OPERATOR FAILS TO ACTUATE CONTAINMENT VENTING	C	5.39E-05	N
G31-XHE-FO-SDC	OPERATOR FAILS TO ACTUATE SDC MODE NO MSL LOCA OUSIDE CONTAINMENT NO SLCS	C	3.95E-05	N
P51-XHE-P21-BU	OPERATOR ACTION TO CONNECT ALTERNATE COOLING GIVEN RCCW FAILED	C	3.64E-05	N

Table 17.7-8

Fire CDF At-Power Operator Actions - FV

BASIC EVENT	DESCRIPTION	HRA TYPE	FV	THRESHOLD
U43-XHE-FO-2ND	OPERATOR FAILS TO ALIGN FPS CROSSTIE	C	3.09E-05	N
E50-XHE-FO-EQU	OPERATOR FAILS TO ACTUATE GDCS	C	2.04E-05	N
G31-TRN-RE-TRAINB	RESTORATION ERRORS RWCU/SDC TRAIN B	A	1.39E-05	N
P41-TRN-RE-PUMP1A	FAILURE TO RESTORE PSW PUMP 1A	A	1.28E-05	N
N21-XHE-FO-CONDMU	FAILURE TO MANUALLY OPEN CONDENSER MAKEUP VALVES	C	1.01E-05	N
P51-XHE-FO-0001-CD	OPERATOR FAILS TO ALIGN ONE BACKUP CMP TO STANDBY	C	8.98E-06	N
P41-TRN-RE-PUMP1B	FAILURE TO RESTORE PSW PUMP 1B	A	6.31E-06	N
P51-CMP-RE-0001-B	SERVICE AIR SYSTEM COMPRESSOR RESTORATION ERROR	A	5.21E-06	N
G21-XHE-FO-RSPC	OPERATOR FAILS TO RECOG. NEED FOR SPC	C	4.30E-06	N
P51-CMP-RE-0001-D	SERVICE AIR SYSTEM COMPRESSOR RESTORATION ERROR	A	2.72E-06	N
G21-XHE-FO-LPCI	OPERATOR FAILS TO ALIGN AND ACTUATE FAPCS IN LPCI MODE	C	7.11E-07	N
R21-XHE-FO-ADGCROSS	OPERATOR FAILS TO CROSS-TIE THE ANCILLARY DG BUSES	C	6.05E-07	N
P51-XHE-FO-CMP	OPERATOR FAIL TO ISOLATE ONE COMPRESSOR TRAIN GIVEN OTHER FAILED	C	1.78E-07	N
C41-XHE-FO-EQU	OPERATOR FAILS TO ACTUATE SLCS	C	1.42E-07	N
P51-CMP-RE-0001-C	SERVICE AIR SYSTEM COMPRESSOR RESTORATION ERROR	A	1.07E-07	N

Table 17.7-9

Fire LRFAt-Power Operator Actions - RAW

BASIC EVENT	DESCRIPTION	HRA TYPE	RAW	THRESHOLD
XXX-XHE-FO-ICPCCS	OPERATOR FAILS TO RECOGNIZE THE NEED TO MAKEUP ICS/PCCS POOL LEVEL.	C	22.77	Y
C71-XHE-FO-SCRAM	OPERATOR FAILS TO PERFORM MANUAL SCRAM	C	7.68	Y
E50-XHE-FO-DLTR2	OPERATOR FAILS TO ENABLE TRAIN 2	C	1.81	N
P21-TRN-RE-HX2B	FAILURE TO RESTORE RCCW TRAIN 2B HX	A	1.49	N
P21-TRN-RE-HX3B	FAILURE TO RESTORE RCCW TRAIN 3B HX	A	1.49	N
P21-TRN-RE-PUMP2B	FAILURE TO RESTORE RCCW TRAIN 2B PUMP	A	1.49	N
P21-TRN-RE-PUMP3B	FAILURE TO RESTORE RCCW TRAIN 3B PUMP	A	1.49	N
P21-TRN-RE-HX1B	FAILURE TO RESTORE RCCW TRAIN 1B HX	A	1.49	N
P21-TRN-RE-PUMP1B	FAILURE TO RESTORE RCCW TRAIN 1B PUMP	A	1.49	N
P21-TRN-RE-HX2A	FAILURE TO RESTORE RCCW TRAIN 2A HX	A	1.49	N
P21-TRN-RE-HX3A	FAILURE TO RESTORE RCCW TRAIN 3A HX	A	1.49	N
P21-TRN-RE-PUMP2A	FAILURE TO RESTORE RCCW TRAIN 2A PUMP	A	1.49	N
P21-TRN-RE-PUMP3A	FAILURE TO RESTORE RCCW TRAIN 3A PUMP	A	1.49	N
P21-TRN-RE-HX1A	FAILURE TO RESTORE RCCW TRAIN 1A HX	A	1.49	N
P21-TRN-RE-PUMP1A	FAILURE TO RESTORE RCCW TRAIN 1A PUMP	A	1.49	N
U43-XHE-FO-MAKEUP	OPERATOR FAILS TO ACTUATE U43 IN MAKE UP MODE	C	1.4	N
R21-XHE-FO-ADG	OPERATOR FAILS TO CONTROL THE LOADS ON ANCILLARY DG BUSES	C	1.37	N
U43-XHE-FO-PMPTRK	OPERATOR FAIL TO SUPPLY WATER FROM PUMP TRUCKS	C	1.26	N
R13-XHE-FO-ADG	OPERATOR FAILS TO ALIGN THE ADG BUSES TO UPS BUSES	C	1.22	N
P41-TRN-RE-PUMP2B	FAILURE TO RESTORE PSW PUMP 2B	A	1.21	N
P41-TRN-RE-PUMP2A	FAILURE TO RESTORE PSW PUMP 2A	A	1.12	N
XXX-XHE-FO-RPVLDE	OP. FAILS TO RECOG. OR CHECK THE RPV DECREASING LEVEL	C	1.09	N
E50-XHE-FO-EQU	OPERATOR FAILS TO ACTUATE GDCS	C	1.08	N
XXX-XHE-FO-DEPRESS	OPERATOR FAILS TO RECOGNIZE NEED OF DEPRESSURIZATION	C	1.06	N
XXX-XHE-FO-LPMAKEUP	OP. FAILS TO RECOG. NEED FOR LOW PRESS. MAKEUP AFTER DEPRESSURIZATION	C	1.03	N
C12-BV_-RE-F013A	MISPOSITION OF VALVE F013A	A	1.03	N
C12-BV_-RE-F015A	MISPOSITION OF VALVE F015A	A	1.03	N

Table 17.7-9

Fire LRFAt-Power Operator Actions - RAW

BASIC EVENT	DESCRIPTION	HRA TYPE	RAW	THRESHOLD
C12-BV_-RE-F013B	MISPOSITION OF VALVE F013B	A	1.03	N
C12-BV_-RE-F015B	MISPOSITION OF VALVE F015B	A	1.03	N
T10-XHE-FO-CONTVENT	OPERATOR FAILS TO ACTUATE CONTAINMENT VENTING	C	1.03	N
C12-BV_-RE-F018A	MISPOSITION OF VALVE F018A	A	1.03	N
C12-BV_-RE-F021A	MISPOSITION OF VALVE F021A	A	1.03	N
B32-XHE-FO-VENT	OPERATOR FAILS TO OPEN VENT	C	1.02	N
R21-TRN-RE-FOADGA	FAILURE TO RESTORE FUEL OIL TRANSFER TRAIN FOR ADG-A	A	1.02	N
R21-TRN-RE-FOADGB	FAILURE TO RESTORE FUEL OIL TRANSFER TRAIN FOR ADG-A	A	1.02	N
C12-BV_-RE-F003B	MISPOSITION OF VALVE F003B	A	1.02	N
C12-BV_-RE-F018B	MISPOSITION OF VALVE FO18B	A	1.02	N
C12-BV_-RE-F021B	MISPOSITION OF VALVE F021B	A	1.02	N
N21-XHE-FO-FWRERUN	OPERATOR FAILS TO RESTART FDW AFTER RUNBACK - ATWS	C	1.01E+00	N
R21-TRN-RE-FODG1A	FAILURE TO RESTORE FUEL OIL TRANSFER TRAIN 1 FOR DG-A	A	1.01	N
R21-TRN-RE-FODG1B	FAILURE TO RESTORE FUEL OIL TRANSFER TRAIN 1 FOR DG-B	A	1.01	N
R21-TRN-RE-FODG2A	FAILURE TO RESTORE FUEL OIL TRANSFER TRAIN 2 FOR DG-A	A	1.01	N
R21-TRN-RE-FODG2B	FAILURE TO RESTORE FUEL OIL TRANSFER TRAIN 2 FOR DG-B	A	1.01	N
G21-XHE-FO-RSPC	OPERATOR FAILS TO RECOG. NEED FOR SPC	C	1.01	N
P41-TRN-RE-PUMP1A	FAILURE TO RESTORE PSW PUMP 1A	A	1.01	N
P41-TRN-RE-PUMP1B	FAILURE TO RESTORE PSW PUMP 1B	A	1.01	N
P54-BV_-RE-F013A	RESTERATION ERROR OF F013A	A	1.01	N
B21-XHE-FO-6OPEN	OPERATOR FAILS TO OPEN 6/10 SRVS	C	1.01	N
U43-XHE-FO-LPCI	OPERATOR FAILS TO ACTUATE U43 IN LPCI MODE	C	1.01	N
G31-XHE-FO-SDCATWS	OPERATOR FAILS TO ACTUATE SDC MODE ATWS	C	1	N
P51-XHE-P21-BU	OPERATOR ACTION TO CONNECT ALTERNATE COOLING GIVEN RCCW FAILED	C	1	N
P52-XHE-CC-0001-B	OPERATOR FAILS TO OPEN STANDBY TRAIN AOV 0001-B	C	1	N
U43-XHE-FO-2ND	OPERATOR FAILS TO ALIGN FPS CROSSTIE	C	1	N

Table 17.7-9

Fire LRFAt-Power Operator Actions - RAW

BASIC EVENT	DESCRIPTION	HRA TYPE	RAW	THRESHOLD
N21-XHE-FO-CONDMU	FAILURE TO MANUALLY OPEN CONDENSER MAKEUP VALVES	C	1.00E+00	**N**
G31-TRN-RE-TRAINB	RESTORATION ERRORS RWCU/SDC TRAIN B	A	1	**N**
G21-XHE-FO-SPC	OPERATOR FAILS TO MANUALLY INI. FAPCS IN SPC MODE	C	1	**N**

Table 17.7-10

Fire LRF At-Power Operator Actions - FV

BASIC EVENT	DESCRIPTION	HRA TYPE	FV	THRESHOLD
C71-XHE-FO-SCRAM	OPERATOR FAILS TO PERFORM MANUAL SCRAM	C	7.43E-01	Y
XXX-XHE-FO-ICPCCS	OPERATOR FAILS TO RECOGNIZE THE NEED TO MAKEUP ICS/PCCS POOL LEVEL.	C	3.55E-02	Y
E50-XHE-FO-DLTR2	OPERATOR FAILS TO ENABLE TRAIN 2	C	1.47E-02	Y
XXX-XHE-FO-DEPRESS	OPERATOR FAILS TO RECOGNIZE NEED OF DEPRESSURIZATION	C	1.25E-02	Y
U43-XHE-FO-PMPTRK	OPERATOR FAIL TO SUPPLY WATER FROM PUMP TRUCKS	C	7.16E-03	N
U43-XHE-FO-MAKEUP	OPERATOR FAILS TO ACTUATE U43 IN MAKE UP MODE	C	6.66E-03	N
XXX-XHE-FO-LPMAKEUP	OP. FAILS TO RECOG. NEED FOR LOW PRESS. MAKEUP AFTER DEPRESSURIZATION	C	6.61E-03	N
R21-XHE-FO-ADG	OPERATOR FAILS TO CONTROL THE LOADS ON ANCILLARY DG BUSES	C	6.20E-03	N
B32-XHE-FO-VENT	OPERATOR FAILS TO OPEN VENT	C	4.69E-03	N
P21-TRN-RE-HX2B	FAILURE TO RESTORE RCCW TRAIN 2B HX	A	4.03E-03	N
P21-TRN-RE-HX3B	FAILURE TO RESTORE RCCW TRAIN 3B HX	A	4.03E-03	N
P21-TRN-RE-PUMP2B	FAILURE TO RESTORE RCCW TRAIN 2B PUMP	A	4.03E-03	N
P21-TRN-RE-PUMP3B	FAILURE TO RESTORE RCCW TRAIN 3B PUMP	A	4.03E-03	N
P21-TRN-RE-HX1B	FAILURE TO RESTORE RCCW TRAIN 1B HX	A	4.02E-03	N
P21-TRN-RE-PUMP1B	FAILURE TO RESTORE RCCW TRAIN 1B PUMP	A	4.02E-03	N
P21-TRN-RE-HX2A	FAILURE TO RESTORE RCCW TRAIN 2A HX	A	4.01E-03	N
P21-TRN-RE-HX3A	FAILURE TO RESTORE RCCW TRAIN 3A HX	A	4.01E-03	N
P21-TRN-RE-PUMP2A	FAILURE TO RESTORE RCCW TRAIN 2A PUMP	A	4.01E-03	N
P21-TRN-RE-PUMP3A	FAILURE TO RESTORE RCCW TRAIN 3A PUMP	A	4.01E-03	N
P21-TRN-RE-HX1A	FAILURE TO RESTORE RCCW TRAIN 1A HX	A	4.00E-03	N
P21-TRN-RE-PUMP1A	FAILURE TO RESTORE RCCW TRAIN 1A PUMP	A	4.00E-03	N
R13-XHE-FO-ADG	OPERATOR FAILS TO ALIGN THE ADG BUSES TO UPS BUSES	C	3.70E-03	N
N21-XHE-FO-FWRERUN	OPERATOR FAILS TO RESTART FDW AFTER RUNBACK - ATWS	C	2.02E-03	N
P41-TRN-RE-PUMP2B	FAILURE TO RESTORE PSW PUMP 2B	A	1.73E-03	N
C12-BV_-RE-F013A	MISPOSITION OF VALVE F013A	A	1.71E-03	N
C12-BV_-RE-F015A	MISPOSITION OF VALVE F015A	A	1.71E-03	N
XXX-XHE-FO-RPVLDE	OP. FAILS TO RECOG. OR CHECK THE RPV DECREASING LEVEL	C	1.52E-03	N

Table 17.7-10

Fire LRF At-Power Operator Actions - FV

BASIC EVENT	DESCRIPTION	HRA TYPE	FV	THRESHOLD
C12-BV_-RE-F013B	MISPOSITION OF VALVE F013B	A	1.32E-03	N
C12-BV_-RE-F015B	MISPOSITION OF VALVE F015B	A	1.32E-03	N
P41-TRN-RE-PUMP2A	FAILURE TO RESTORE PSW PUMP 2A	A	9.60E-04	N
G31-XHE-FO-SDCATWS	OPERATOR FAILS TO ACTUATE SDC MODE ATWS	C	6.70E-04	N
R21-TRN-RE-FOADGA	FAILURE TO RESTORE FUEL OIL TRANSFER TRAIN FOR ADG-A	A	5.78E-04	N
R21-TRN-RE-FOADGB	FAILURE TO RESTORE FUEL OIL TRANSFER TRAIN FOR ADG-A	A	5.78E-04	N
T10-XHE-FO-CONTVENT	OPERATOR FAILS TO ACTUATE CONTAINMENT VENTING	C	5.61E-04	N
C12-BV_-RE-F018A	MISPOSITION OF VALVE F018A	A	3.63E-04	N
C12-BV_-RE-F021A	MISPOSITION OF VALVE F021A	A	3.63E-04	N
C12-BV_-RE-F003B	MISPOSITION OF VALVE F003B	A	2.27E-04	N
C12-BV_-RE-F018B	MISPOSITION OF VALVE FO18B	A	2.27E-04	N
C12-BV_-RE-F021B	MISPOSITION OF VALVE F021B	A	2.27E-04	N
R21-TRN-RE-FODG1A	FAILURE TO RESTORE FUEL OIL TRANSFER TRAIN 1 FOR DG-A	A	1.92E-04	N
R21-TRN-RE-FODG1B	FAILURE TO RESTORE FUEL OIL TRANSFER TRAIN 1 FOR DG-B	A	1.92E-04	N
R21-TRN-RE-FODG2A	FAILURE TO RESTORE FUEL OIL TRANSFER TRAIN 2 FOR DG-A	A	1.92E-04	N
R21-TRN-RE-FODG2B	FAILURE TO RESTORE FUEL OIL TRANSFER TRAIN 2 FOR DG-B	A	1.92E-04	N
G21-XHE-FO-RSPC	OPERATOR FAILS TO RECOG. NEED FOR SPC	C	1.34E-04	N
E50-XHE-FO-EQU	OPERATOR FAILS TO ACTUATE GDCS	C	1.31E-04	N
P41-TRN-RE-PUMP1A	FAILURE TO RESTORE PSW PUMP 1A	A	1.01E-04	N
P41-TRN-RE-PUMP1B	FAILURE TO RESTORE PSW PUMP 1B	A	9.83E-05	N
P51-XHE-P21-BU	OPERATOR ACTION TO CONNECT ALTERNATE COOLING GIVEN RCCW FAILED	C	8.86E-05	N
P52-XHE-CC-0001-B	OPERATOR FAILS TO OPEN STANDBY TRAIN AOV 0001-B	C	7.07E-05	N
U43-XHE-FO-2ND	OPERATOR FAILS TO ALIGN FPS CROSSTIE	C	5.24E-05	N
P54-BV_-RE-F013A	RESTERATION ERROR OF F013A	A	2.44E-05	N
B21-XHE-FO-6OPEN	OPERATOR FAILS TO OPEN 6/10 SRVS	C	1.60E-05	N
N21-XHE-FO-CONDMU	FAILURE TO MANUALLY OPEN CONDENSER MAKEUP VALVES	C	1.14E-05	N

Table 17.7-10

Fire LRF At-Power Operator Actions - FV

BASIC EVENT	DESCRIPTION	HRA TYPE	FV	THRESHOLD
U43-XHE-FO-LPCI	OPERATOR FAILS TO ACTUATE U43 IN LPCI MODE	C	1.10E-05	**N**
G31-TRN-RE-TRAINB	RESTORATION ERRORS RWCU/SDC TRAIN B	A	9.12E-06	**N**
G21-XHE-FO-SPC	OPERATOR FAILS TO MANUALLY INI. FAPCS IN SPC MODE	C	4.56E-06	**N**

Table 17.7-11

Flood CDF At-Power Operator Actions - RAW

BASIC EVENT	DESCRIPTION	HRA TYPE	RAW	THRESHOLD
XXX-XHE-FO-ICPCCS	OPERATOR FAILS TO RECOGNIZE THE NEED TO MAKEUP ICS/PCCS POOL LEVEL.	C	4.01	N
R21-XHE-FO-ADG	OPERATOR FAILS TO CONTROL THE LOADS ON ANCILLARY DG BUSES	C	1.55	N
R13-XHE-FO-ADG	OPERATOR FAILS TO ALIGN THE ADG BUSES TO UPS BUSES	C	1.55	N
P54-BV_-RE-F013A	RESTERATION ERROR OF F013A	A	1.46	N
P51-XHE-P21-BU	OPERATOR ACTION TO CONNECT ALTERNATE COOLING GIVEN RCCW FAILED	C	1.34	N
XXX-XHE-FO-DEPRESS	OPERATOR FAILS TO RECOGNIZE NEED OF DEPRESSURIZATION	C	1.32	N
B32-XHE-FO-VENT	OPERATOR FAILS TO OPEN VENT	C	1.23	N
U43-XHE-FO-LPCI	OPERATOR FAILS TO ACTUATE U43 IN LPCI MODE	C	1.22	N
C71-XHE-FO-SCRAM	OPERATOR FAILS TO PERFORM MANUAL SCRAM	C	1.2	N
XXX-XHE-FO-LPMAKEUP	OP. FAILS TO RECOG. NEED FOR LOW PRESS. MAKEUP AFTER DEPRESSURIZATION	C	1.14	N
B21-XHE-FO-6OPEN	OPERATOR FAILS TO OPEN 6/10 SRVS	C	1.14	N
R21-TRN-RE-FOADGA	FAILURE TO RESTORE FUEL OIL TRANSFER TRAIN FOR ADG-A	A	1.08	N
R21-TRN-RE-FOADGB	FAILURE TO RESTORE FUEL OIL TRANSFER TRAIN FOR ADG-A	A	1.08	N
U43-XHE-FO-MAKEUP	OPERATOR FAILS TO ACTUATE U43 IN MAKE UP MODE	C	1.07	N
C12-BV_-RE-F018A	MISPOSITION OF VALVE F018A	A	1.07	N
C12-BV_-RE-F021A	MISPOSITION OF VALVE F021A	A	1.07	N
C12-BV_-RE-F013A	MISPOSITION OF VALVE F013A	A	1.06	N
C12-BV_-RE-F013B	MISPOSITION OF VALVE F013B	A	1.06	N
C12-BV_-RE-F015A	MISPOSITION OF VALVE F015A	A	1.06	N
C12-BV_-RE-F015B	MISPOSITION OF VALVE F015B	A	1.06	N
C12-BV_-RE-F003B	MISPOSITION OF VALVE F003B	A	1.06	N
C12-BV_-RE-F018B	MISPOSITION OF VALVE FO18B	A	1.06	N
C12-BV_-RE-F021B	MISPOSITION OF VALVE F021B	A	1.06	N
U43-XHE-FO-PMPTRK	OPERATOR FAIL TO SUPPLY WATER FROM PUMP TRUCKS	C	1.05	N
N21-XHE-FO-FWRERUN	OPERATOR FAILS TO RESTART FDW AFTER RUNBACK - ATWS	C	1.03	N

Table 17.7-11

Flood CDF At-Power Operator Actions - RAW

BASIC EVENT	DESCRIPTION	HRA TYPE	RAW	THRESHOLD
G31-XHE-FO-SDC	OPERATOR FAILS TO ACTUATE SDC MODE NO MSL LOCA OUSIDE CONTAINMENT NO SLCS	C	1.02	N
P21-TRN-RE-HX1A	FAILURE TO RESTORE RCCW TRAIN 1A HX	A	1.02	N
P21-TRN-RE-HX2A	FAILURE TO RESTORE RCCW TRAIN 2A HX	A	1.02	N
P21-TRN-RE-HX3A	FAILURE TO RESTORE RCCW TRAIN 3A HX	A	1.02	N
P21-TRN-RE-PUMP1A	FAILURE TO RESTORE RCCW TRAIN 1A PUMP	A	1.02	N
P21-TRN-RE-PUMP2A	FAILURE TO RESTORE RCCW TRAIN 2A PUMP	A	1.02	N
P21-TRN-RE-PUMP3A	FAILURE TO RESTORE RCCW TRAIN 3A PUMP	A	1.02	N
P21-TRN-RE-HX1B	FAILURE TO RESTORE RCCW TRAIN 1B HX	A	1.02	N
P21-TRN-RE-HX2B	FAILURE TO RESTORE RCCW TRAIN 2B HX	A	1.02	N
P21-TRN-RE-HX3B	FAILURE TO RESTORE RCCW TRAIN 3B HX	A	1.02	N
P21-TRN-RE-PUMP1B	FAILURE TO RESTORE RCCW TRAIN 1B PUMP	A	1.02	N
P21-TRN-RE-PUMP2B	FAILURE TO RESTORE RCCW TRAIN 2B PUMP	A	1.02	N
P21-TRN-RE-PUMP3B	FAILURE TO RESTORE RCCW TRAIN 3B PUMP	A	1.02	N
N21-XHE-FO-CONDMU	FAILURE TO MANUALLY OPEN CONDENSER MAKEUP VALVES	C	1.01	N
P52-XHE-CC-0001-B	OPERATOR FAILS TO OPEN STANDBY TRAIN AOV 0001-B	C	1.01	N
P41-TRN-RE-PUMP2A	FAILURE TO RESTORE PSW PUMP 2A	A	1.01	N
P41-TRN-RE-PUMP2B	FAILURE TO RESTORE PSW PUMP 2B	A	1.01	N
C12-BV_-RE-F064	MISPOSITION OF OPEN VALVE F064	A	1	N
T10-XHE-FO-CONTVENT	OPERATOR FAILS TO ACTUATE CONTAINMENT VENTING	C	1	N
G31-XHE-FO-SDCATWS	OPERATOR FAILS TO ACTUATE SDC MODE ATWS	C	1	N
G21-XHE-FO-RSPC	OPERATOR FAILS TO RECOG. NEED FOR SPC	C	1	N
P41-TRN-RE-PUMP1A	FAILURE TO RESTORE PSW PUMP 1A	A	1	N
P41-TRN-RE-PUMP1B	FAILURE TO RESTORE PSW PUMP 1B	A	1	N
C12-XHE-FO-LEVEL2	OPERATOR FAILS TO BACK-UP CRD ACTUATION	C	1	N
P22-TRN-RE-PUMP1C	FAILURE TO RESTORE TCCW PUMP 1C	A	1	N

Table 17.7-11

Flood CDF At-Power Operator Actions - RAW

BASIC EVENT	DESCRIPTION	HRA TYPE	RAW	THRESHOLD
P22-XHE-FO-HX	FAILURE TO ALIGN TCCW HX	C	1	N
P41-XHE-FO-TCCWHX	FAILURE TO MANUALLY ALIGN STANDBY TCCW HX	C	1	N
U43-XHE-FO-2ND	OPERATOR FAILS TO ALIGN FPS CROSSTIE	C	1	N
R21-TRN-RE-FODG1A	FAILURE TO RESTORE FUEL OIL TRANSFER TRAIN 1 FOR DG-A	A	1	N
R21-TRN-RE-FODG1B	FAILURE TO RESTORE FUEL OIL TRANSFER TRAIN 1 FOR DG-B	A	1	N
R21-TRN-RE-FODG2A	FAILURE TO RESTORE FUEL OIL TRANSFER TRAIN 2 FOR DG-A	A	1	N
R21-TRN-RE-FODG2B	FAILURE TO RESTORE FUEL OIL TRANSFER TRAIN 2 FOR DG-B	A	1	N
P51-XHE-FO-0001-CD	OPERATOR FAILS TO ALIGN ONE BACKUP CMP TO STANDBY	C	1	N
G31-TRN-RE-TRAINB	RESTORATION ERRORS RWCU/SDC TRAIN B	A	1	N
P51-CMP-RE-0001-B	SERVICE AIR SYSTEM COMPRESSOR RESTORATION ERROR	A	1	N

Table 17.7-12

Flood CDF At-Power Operator Actions - FV

BASIC EVENT	DESCRIPTION	HRA TYPE	FV	THRESHOLD
XXX-XHE-FO-DEPRESS	OPERATOR FAILS TO RECOGNIZE NEED OF DEPRESSURIZATION	C	6.08E-02	Y
B32-XHE-FO-VENT	OPERATOR FAILS TO OPEN VENT	C	4.84E-02	Y
XXX-XHE-FO-LPMAKEUP	OP. FAILS TO RECOG. NEED FOR LOW PRESS. MAKEUP AFTER DEPRESSURIZATION	C	2.72E-02	Y
C71-XHE-FO-SCRAM	OPERATOR FAILS TO PERFORM MANUAL SCRAM	C	2.23E-02	Y
R21-XHE-FO-ADG	OPERATOR FAILS TO CONTROL THE LOADS ON ANCILLARY DG BUSES	C	9.04E-03	N
R13-XHE-FO-ADG	OPERATOR FAILS TO ALIGN THE ADG BUSES TO UPS BUSES	C	9.01E-03	N
N21-XHE-FO-FWRERUN	OPERATOR FAILS TO RESTART FDW AFTER RUNBACK - ATWS	C	7.05E-03	N
P51-XHE-P21-BU	OPERATOR ACTION TO CONNECT ALTERNATE COOLING GIVEN RCCW FAILED	C	6.08E-03	N
XXX-XHE-FO-ICPCCS	OPERATOR FAILS TO RECOGNIZE THE NEED TO MAKEUP ICS/PCCS POOL LEVEL.	C	4.87E-03	N
C12-BV_-RE-F013A	MISPOSITION OF VALVE F013A	A	3.23E-03	N
C12-BV_-RE-F013B	MISPOSITION OF VALVE F013B	A	3.23E-03	N
C12-BV_-RE-F015A	MISPOSITION OF VALVE F015A	A	3.23E-03	N
C12-BV_-RE-F015B	MISPOSITION OF VALVE F015B	A	3.23E-03	N
R21-TRN-RE-FOADGA	FAILURE TO RESTORE FUEL OIL TRANSFER TRAIN FOR ADG-A	A	1.87E-03	N
R21-TRN-RE-FOADGB	FAILURE TO RESTORE FUEL OIL TRANSFER TRAIN FOR ADG-A	A	1.87E-03	N
P54-BV_-RE-F013A	RESTERATION ERROR OF F013A	A	1.86E-03	N
N21-XHE-FO-CONDMU	FAILURE TO MANUALLY OPEN CONDENSER MAKEUP VALVES	C	1.38E-03	N
U43-XHE-FO-PMPTRK	OPERATOR FAIL TO SUPPLY WATER FROM PUMP TRUCKS	C	1.24E-03	N
U43-XHE-FO-MAKEUP	OPERATOR FAILS TO ACTUATE U43 IN MAKE UP MODE	C	1.20E-03	N
C12-BV_-RE-F018A	MISPOSITION OF VALVE F018A	A	8.03E-04	N
C12-BV_-RE-F021A	MISPOSITION OF VALVE F021A	A	8.03E-04	N
C12-BV_-RE-F003B	MISPOSITION OF VALVE F003B	A	6.90E-04	N
C12-BV_-RE-F018B	MISPOSITION OF VALVE FO18B	A	6.90E-04	N
C12-BV_-RE-F021B	MISPOSITION OF VALVE F021B	A	6.90E-04	N

Table 17.7-12

Flood CDF At-Power Operator Actions - FV

BASIC EVENT	DESCRIPTION	HRA TYPE	FV	THRESHOLD
U43-XHE-FO-LPCI	OPERATOR FAILS TO ACTUATE U43 IN LPCI MODE	C	3.68E-04	N
G31-XHE-FO-SDC	OPERATOR FAILS TO ACTUATE SDC MODE NO MSL LOCA OUSIDE CONTAINMENT NO SLCS	C	3.25E-04	N
B21-XHE-FO-6OPEN	OPERATOR FAILS TO OPEN 6/10 SRVS	C	2.32E-04	N
P52-XHE-CC-0001-B	OPERATOR FAILS TO OPEN STANDBY TRAIN AOV 0001-B	C	2.14E-04	N
P21-TRN-RE-HX1A	FAILURE TO RESTORE RCCW TRAIN 1A HX	A	2.02E-04	N
P21-TRN-RE-HX2A	FAILURE TO RESTORE RCCW TRAIN 2A HX	A	2.02E-04	N
P21-TRN-RE-HX3A	FAILURE TO RESTORE RCCW TRAIN 3A HX	A	2.02E-04	N
P21-TRN-RE-PUMP1A	FAILURE TO RESTORE RCCW TRAIN 1A PUMP	A	2.02E-04	N
P21-TRN-RE-PUMP2A	FAILURE TO RESTORE RCCW TRAIN 2A PUMP	A	2.02E-04	N
P21-TRN-RE-PUMP3A	FAILURE TO RESTORE RCCW TRAIN 3A PUMP	A	2.02E-04	N
P21-TRN-RE-HX1B	FAILURE TO RESTORE RCCW TRAIN 1B HX	A	1.97E-04	N
P21-TRN-RE-HX2B	FAILURE TO RESTORE RCCW TRAIN 2B HX	A	1.97E-04	N
P21-TRN-RE-HX3B	FAILURE TO RESTORE RCCW TRAIN 3B HX	A	1.97E-04	N
P21-TRN-RE-PUMP1B	FAILURE TO RESTORE RCCW TRAIN 1B PUMP	A	1.97E-04	N
P21-TRN-RE-PUMP2B	FAILURE TO RESTORE RCCW TRAIN 2B PUMP	A	1.97E-04	N
P21-TRN-RE-PUMP3B	FAILURE TO RESTORE RCCW TRAIN 3B PUMP	A	1.97E-04	N
P41-TRN-RE-PUMP2A	FAILURE TO RESTORE PSW PUMP 2A	A	7.93E-05	N
P41-TRN-RE-PUMP2B	FAILURE TO RESTORE PSW PUMP 2B	A	7.93E-05	N
C12-BV_-RE-F064	MISPOSITION OF OPEN VALVE F064	A	7.32E-05	N
T10-XHE-FO-CONTVENT	OPERATOR FAILS TO ACTUATE CONTAINMENT VENTING	C	6.62E-05	N
G31-XHE-FO-SDCATWS	OPERATOR FAILS TO ACTUATE SDC MODE ATWS	C	2.93E-05	N
G21-XHE-FO-RSPC	OPERATOR FAILS TO RECOG. NEED FOR SPC	C	1.93E-05	N
P41-TRN-RE-PUMP1A	FAILURE TO RESTORE PSW PUMP 1A	A	8.75E-06	N
P41-TRN-RE-PUMP1B	FAILURE TO RESTORE PSW PUMP 1B	A	8.75E-06	N
C12-XHE-FO-LEVEL2	OPERATOR FAILS TO BACK-UP CRD ACTUATION	C	5.88E-06	N
P22-TRN-RE-PUMP1C	FAILURE TO RESTORE TCCW PUMP 1C	A	5.62E-06	N

Table 17.7-12

Flood CDF At-Power Operator Actions - FV

BASIC EVENT	DESCRIPTION	HRA TYPE	FV	THRESHOLD
P22-XHE-FO-HX	FAILURE TO ALIGN TCCW HX	C	5.11E-06	N
P41-XHE-FO-TCCWHX	FAILURE TO MANUALLY ALIGN STANDBY TCCW HX	C	5.11E-06	N
U43-XHE-FO-2ND	OPERATOR FAILS TO ALIGN FPS CROSSTIE	C	4.60E-06	N
R21-TRN-RE-FODG1A	FAILURE TO RESTORE FUEL OIL TRANSFER TRAIN 1 FOR DG-A	A	2.88E-06	N
R21-TRN-RE-FODG1B	FAILURE TO RESTORE FUEL OIL TRANSFER TRAIN 1 FOR DG-B	A	2.88E-06	N
R21-TRN-RE-FODG2A	FAILURE TO RESTORE FUEL OIL TRANSFER TRAIN 2 FOR DG-A	A	2.88E-06	N
R21-TRN-RE-FODG2B	FAILURE TO RESTORE FUEL OIL TRANSFER TRAIN 2 FOR DG-B	A	2.88E-06	N
P51-XHE-FO-0001-CD	OPERATOR FAILS TO ALIGN ONE BACKUP CMP TO STANDBY	C	2.40E-06	N
G31-TRN-RE-TRAINB	RESTORATION ERRORS RWCU/SDC TRAIN B	A	1.85E-06	N
P51-CMP-RE-0001-B	SERVICE AIR SYSTEM COMPRESSOR RESTORATION ERROR	A	2.24E-07	N

Table 17.7-13

Flood LRF At-Power Operator Actions - RAW

BASIC EVENT	DESCRIPTION	HRA TYPE	RAW	THRESHOLD
XXX-XHE-FO-ICPCCS	OPERATOR FAILS TO RECOGNIZE THE NEED TO MAKEUP ICS/PCCS POOL LEVEL.	C	6.24	Y
R21-XHE-FO-ADG	OPERATOR FAILS TO CONTROL THE LOADS ON ANCILLARY DG BUSES	C	1.95	N
R13-XHE-FO-ADG	OPERATOR FAILS TO ALIGN THE ADG BUSES TO UPS BUSES	C	1.94	N
P51-XHE-P21-BU	OPERATOR ACTION TO CONNECT ALTERNATE COOLING GIVEN RCCW FAILED	C	1.58	N
P54-BV_-RE-F013A	RESTERATION ERROR OF F013A	A	1.49	N
C71-XHE-FO-SCRAM	OPERATOR FAILS TO PERFORM MANUAL SCRAM	C	1.34	N
T10-XHE-FO-CONTVENT	OPERATOR FAILS TO ACTUATE CONTAINMENT VENTING	C	1.25	N
R21-TRN-RE-FOADGA	FAILURE TO RESTORE FUEL OIL TRANSFER TRAIN FOR ADG-A	A	1.13	N
R21-TRN-RE-FOADGB	FAILURE TO RESTORE FUEL OIL TRANSFER TRAIN FOR ADG-A	A	1.13	N
U43-XHE-FO-MAKEUP	OPERATOR FAILS TO ACTUATE U43 IN MAKE UP MODE	C	1.13	N
U43-XHE-FO-PMPTRK	OPERATOR FAIL TO SUPPLY WATER FROM PUMP TRUCKS	C	1.08	N
B32-XHE-FO-VENT	OPERATOR FAILS TO OPEN VENT	C	1.06	N
C12-BV_-RE-F013A	MISPOSITION OF VALVE F013A	A	1.06	N
C12-BV_-RE-F013B	MISPOSITION OF VALVE F013B	A	1.06	N
C12-BV_-RE-F015A	MISPOSITION OF VALVE F015A	A	1.06	N
C12-BV_-RE-F015B	MISPOSITION OF VALVE F015B	A	1.06	N
XXX-XHE-FO-DEPRESS	OPERATOR FAILS TO RECOGNIZE NEED OF DEPRESSURIZATION	C	1.04	N
P21-TRN-RE-HX1A	FAILURE TO RESTORE RCCW TRAIN 1A HX	A	1.04	N
P21-TRN-RE-HX1B	FAILURE TO RESTORE RCCW TRAIN 1B HX	A	1.04	N
P21-TRN-RE-HX2A	FAILURE TO RESTORE RCCW TRAIN 2A HX	A	1.04	N
P21-TRN-RE-HX2B	FAILURE TO RESTORE RCCW TRAIN 2B HX	A	1.04	N
P21-TRN-RE-HX3A	FAILURE TO RESTORE RCCW TRAIN 3A HX	A	1.04	N
P21-TRN-RE-HX3B	FAILURE TO RESTORE RCCW TRAIN 3B HX	A	1.04	N
P21-TRN-RE-PUMP1A	FAILURE TO RESTORE RCCW TRAIN 1A PUMP	A	1.04	N
P21-TRN-RE-PUMP1B	FAILURE TO RESTORE RCCW TRAIN 1B PUMP	A	1.04	N
P21-TRN-RE-PUMP2A	FAILURE TO RESTORE RCCW TRAIN 2A PUMP	A	1.04	N

Table 17.7-13

Flood LRF At-Power Operator Actions - RAW

BASIC EVENT	DESCRIPTION	HRA TYPE	RAW	THRESHOLD
P21-TRN-RE-PUMP2B	FAILURE TO RESTORE RCCW TRAIN 2B PUMP	A	1.04	N
P21-TRN-RE-PUMP3A	FAILURE TO RESTORE RCCW TRAIN 3A PUMP	A	1.04	N
P21-TRN-RE-PUMP3B	FAILURE TO RESTORE RCCW TRAIN 3B PUMP	A	1.04	N
C12-BV_-RE-F018A	MISPOSITION OF VALVE F018A	A	1.03	N
C12-BV_-RE-F021A	MISPOSITION OF VALVE F021A	A	1.03	N
XXX-XHE-FO-LPMAKEUP	OP. FAILS TO RECOG. NEED FOR LOW PRESS. MAKEUP AFTER DEPRESSURIZATION	C	1.02	N
C12-BV_-RE-F003B	MISPOSITION OF VALVE F003B	A	1.02	N
C12-BV_-RE-F018B	MISPOSITION OF VALVE FO18B	A	1.02	N
C12-BV_-RE-F021B	MISPOSITION OF VALVE F021B	A	1.02	N
B21-XHE-FO-6OPEN	OPERATOR FAILS TO OPEN 6/10 SRVS	C	1.02	N
N21-XHE-FO-FWRERUN	OPERATOR FAILS TO RESTART FDW AFTER RUNBACK - ATWS	C	1.01	N
N21-XHE-FO-CONDMU	FAILURE TO MANUALLY OPEN CONDENSER MAKEUP VALVES	C	1.01	N
P41-TRN-RE-PUMP2A	FAILURE TO RESTORE PSW PUMP 2A	A	1.01	N
P41-TRN-RE-PUMP2B	FAILURE TO RESTORE PSW PUMP 2B	A	1.01	N
P52-XHE-CC-0001-B	OPERATOR FAILS TO OPEN STANDBY TRAIN AOV 0001-B	C	1.01	N
G31-XHE-FO-SDCATWS	OPERATOR FAILS TO ACTUATE SDC MODE ATWS	C	1	N
G21-XHE-FO-RSPC	OPERATOR FAILS TO RECOG. NEED FOR SPC	C	1	N
P41-TRN-RE-PUMP1A	FAILURE TO RESTORE PSW PUMP 1A	A	1	N
P41-TRN-RE-PUMP1B	FAILURE TO RESTORE PSW PUMP 1B	A	1	N
P22-TRN-RE-PUMP1C	FAILURE TO RESTORE TCCW PUMP 1C	A	1	N
P22-XHE-FO-HX	FAILURE TO ALIGN TCCW HX	C	1	N
P41-XHE-FO-TCCWHX	FAILURE TO MANUALLY ALIGN STANDBY TCCW HX	C	1	N
U43-XHE-FO-2ND	OPERATOR FAILS TO ALIGN FPS CROSSTIE	C	1	N
U43-XHE-FO-LPCI	OPERATOR FAILS TO ACTUATE U43 IN LPCI MODE	C	1	N
R21-TRN-RE-FODG1A	FAILURE TO RESTORE FUEL OIL TRANSFER TRAIN 1 FOR DG-A	A	1	N
R21-TRN-RE-FODG1B	FAILURE TO RESTORE FUEL OIL TRANSFER TRAIN 1 FOR DG-B	A	1	N

Table 17.7-13

Flood LRF At-Power Operator Actions - RAW

BASIC EVENT	DESCRIPTION	HRA TYPE	RAW	THRESHOLD
R21-TRN-RE-FODG2A	FAILURE TO RESTORE FUEL OIL TRANSFER TRAIN 2 FOR DG-A	A	1	**N**
R21-TRN-RE-FODG2B	FAILURE TO RESTORE FUEL OIL TRANSFER TRAIN 2 FOR DG-B	A	1	**N**
G31-XHE-FO-SDC	OPERATOR FAILS TO ACTUATE SDC MODE NO MSL LOCA OUSIDE CONTAINMENT NO SLCS	C	1	**N**
E50-XHE-FO-DLTR2	OPERATOR FAILS TO ENABLE TRAIN 2	C	1	**N**
C12-XHE-FO-LEVEL2	OPERATOR FAILS TO BACK-UP CRD ACTUATION	C	1	**N**
P51-XHE-FO-0001-CD	OPERATOR FAILS TO ALIGN ONE BACKUP CMP TO STANDBY	C	1	**N**
P51-CMP-RE-0001-B	SERVICE AIR SYSTEM COMPRESSOR RESTORATION ERROR	A	1	**N**

Table 17.7-14

Flood LRF At-Power Operator Actions - FV

BASIC EVENT	DESCRIPTION	HRA TYPE	FV	THRESHOLD
C71-XHE-FO-SCRAM	OPERATOR FAILS TO PERFORM MANUAL SCRAM	C	3.80E-02	Y
R13-XHE-FO-ADG	OPERATOR FAILS TO ALIGN THE ADG BUSES TO UPS BUSES	C	1.55E-02	Y
R21-XHE-FO-ADG	OPERATOR FAILS TO CONTROL THE LOADS ON ANCILLARY DG BUSES	C	1.55E-02	Y
B32-XHE-FO-VENT	OPERATOR FAILS TO OPEN VENT	C	1.33E-02	Y
P51-XHE-P21-BU	OPERATOR ACTION TO CONNECT ALTERNATE COOLING GIVEN RCCW FAILED	C	1.05E-02	Y
XXX-XHE-FO-ICPCCS	OPERATOR FAILS TO RECOGNIZE THE NEED TO MAKEUP ICS/PCCS POOL LEVEL.	C	8.47E-03	N
XXX-XHE-FO-DEPRESS	OPERATOR FAILS TO RECOGNIZE NEED OF DEPRESSURIZATION	C	6.90E-03	N
T10-XHE-FO-CONTVENT	OPERATOR FAILS TO ACTUATE CONTAINMENT VENTING	C	4.44E-03	N
R21-TRN-RE-FOADGA	FAILURE TO RESTORE FUEL OIL TRANSFER TRAIN FOR ADG-A	A	3.20E-03	N
R21-TRN-RE-FOADGB	FAILURE TO RESTORE FUEL OIL TRANSFER TRAIN FOR ADG-A	A	3.20E-03	N
C12-BV_-RE-F013A	MISPOSITION OF VALVE F013A	A	3.13E-03	N
C12-BV_-RE-F013B	MISPOSITION OF VALVE F013B	A	3.13E-03	N
C12-BV_-RE-F015A	MISPOSITION OF VALVE F015A	A	3.13E-03	N
C12-BV_-RE-F015B	MISPOSITION OF VALVE F015B	A	3.13E-03	N
XXX-XHE-FO-LPMAKEUP	OP. FAILS TO RECOG. NEED FOR LOW PRESS. MAKEUP AFTER DEPRESSURIZATION	C	3.03E-03	N
N21-XHE-FO-FWRERUN	OPERATOR FAILS TO RESTART FDW AFTER RUNBACK - ATWS	C	2.44E-03	N
N21-XHE-FO-CONDMU	FAILURE TO MANUALLY OPEN CONDENSER MAKEUP VALVES	C	2.28E-03	N
U43-XHE-FO-PMPTRK	OPERATOR FAIL TO SUPPLY WATER FROM PUMP TRUCKS	C	2.15E-03	N
U43-XHE-FO-MAKEUP	OPERATOR FAILS TO ACTUATE U43 IN MAKE UP MODE	C	2.08E-03	N
P54-BV_-RE-F013A	RESTERATION ERROR OF F013A	A	2.00E-03	N
C12-BV_-RE-F018A	MISPOSITION OF VALVE F018A	A	3.93E-04	N
C12-BV_-RE-F021A	MISPOSITION OF VALVE F021A	A	3.93E-04	N
P21-TRN-RE-HX1A	FAILURE TO RESTORE RCCW TRAIN 1A HX	A	3.19E-04	N
P21-TRN-RE-HX1B	FAILURE TO RESTORE RCCW TRAIN 1B HX	A	3.19E-04	N
P21-TRN-RE-HX2A	FAILURE TO RESTORE RCCW TRAIN 2A HX	A	3.19E-04	N
P21-TRN-RE-HX2B	FAILURE TO RESTORE RCCW TRAIN 2B HX	A	3.19E-04	N

Table 17.7-14

Flood LRF At-Power Operator Actions - FV

BASIC EVENT	DESCRIPTION	HRA TYPE	FV	THRESHOLD
P21-TRN-RE-HX3A	FAILURE TO RESTORE RCCW TRAIN 3A HX	A	3.19E-04	N
P21-TRN-RE-HX3B	FAILURE TO RESTORE RCCW TRAIN 3B HX	A	3.19E-04	N
P21-TRN-RE-PUMP1A	FAILURE TO RESTORE RCCW TRAIN 1A PUMP	A	3.19E-04	N
P21-TRN-RE-PUMP1B	FAILURE TO RESTORE RCCW TRAIN 1B PUMP	A	3.19E-04	N
P21-TRN-RE-PUMP2A	FAILURE TO RESTORE RCCW TRAIN 2A PUMP	A	3.19E-04	N
P21-TRN-RE-PUMP2B	FAILURE TO RESTORE RCCW TRAIN 2B PUMP	A	3.19E-04	N
P21-TRN-RE-PUMP3A	FAILURE TO RESTORE RCCW TRAIN 3A PUMP	A	3.19E-04	N
P21-TRN-RE-PUMP3B	FAILURE TO RESTORE RCCW TRAIN 3B PUMP	A	3.19E-04	N
C12-BV_-RE-F003B	MISPOSITION OF VALVE F003B	A	2.59E-04	N
C12-BV_-RE-F018B	MISPOSITION OF VALVE FO18B	A	2.59E-04	N
C12-BV_-RE-F021B	MISPOSITION OF VALVE F021B	A	2.59E-04	N
P41-TRN-RE-PUMP2A	FAILURE TO RESTORE PSW PUMP 2A	A	1.11E-04	N
P41-TRN-RE-PUMP2B	FAILURE TO RESTORE PSW PUMP 2B	A	1.11E-04	N
P52-XHE-CC-0001-B	OPERATOR FAILS TO OPEN STANDBY TRAIN AOV 0001-B	C	9.44E-05	N
G31-XHE-FO-SDCATWS	OPERATOR FAILS TO ACTUATE SDC MODE ATWS	C	4.99E-05	N
G21-XHE-FO-RSPC	OPERATOR FAILS TO RECOG. NEED FOR SPC	C	4.56E-05	N
B21-XHE-FO-6OPEN	OPERATOR FAILS TO OPEN 6/10 SRVS	C	2.50E-05	N
P41-TRN-RE-PUMP1A	FAILURE TO RESTORE PSW PUMP 1A	A	1.49E-05	N
P41-TRN-RE-PUMP1B	FAILURE TO RESTORE PSW PUMP 1B	A	1.49E-05	N
P22-TRN-RE-PUMP1C	FAILURE TO RESTORE TCCW PUMP 1C	A	9.56E-06	N
P22-XHE-FO-HX	FAILURE TO ALIGN TCCW HX	C	8.69E-06	N
P41-XHE-FO-TCCWHX	FAILURE TO MANUALLY ALIGN STANDBY TCCW HX	C	8.69E-06	N
U43-XHE-FO-2ND	OPERATOR FAILS TO ALIGN FPS CROSSTIE	C	7.82E-06	N
U43-XHE-FO-LPCI	OPERATOR FAILS TO ACTUATE U43 IN LPCI MODE	C	6.95E-06	N
R21-TRN-RE-FODG1A	FAILURE TO RESTORE FUEL OIL TRANSFER TRAIN 1 FOR DG-A	A	4.89E-06	N
R21-TRN-RE-FODG1B	FAILURE TO RESTORE FUEL OIL TRANSFER TRAIN 1 FOR DG-B	A	4.89E-06	N
R21-TRN-RE-FODG2A	FAILURE TO RESTORE FUEL OIL TRANSFER TRAIN 2 FOR DG-A	A	4.89E-06	N

Table 17.7-14

Flood LRF At-Power Operator Actions - FV

BASIC EVENT	DESCRIPTION	HRA TYPE	FV	THRESHOLD
R21-TRN-RE-FODG2B	FAILURE TO RESTORE FUEL OIL TRANSFER TRAIN 2 FOR DG-B	A	4.89E-06	N
G31-XHE-FO-SDC	OPERATOR FAILS TO ACTUATE SDC MODE NO MSL LOCA OUSIDE CONTAINMENT NO SLCS	C	3.26E-06	N
E50-XHE-FO-DLTR2	OPERATOR FAILS TO ENABLE TRAIN 2	C	2.17E-06	N
C12-XHE-FO-LEVEL2	OPERATOR FAILS TO BACK-UP CRD ACTUATION	C	1.96E-06	N
P51-XHE-FO-0001-CD	OPERATOR FAILS TO ALIGN ONE BACKUP CMP TO STANDBY	C	1.68E-06	N
P51-CMP-RE-0001-B	SERVICE AIR SYSTEM COMPRESSOR RESTORATION ERROR	A	3.80E-07	N

Table 17.7-15

High Wind CDF At-Power Operator Actions - RAW

BASIC EVENT	DESCRIPTION	HRA TYPE	RAW	THRESHOLD
XXX-XHE-FO-ICPCCS	OPERATOR FAILS TO RECOGNIZE THE NEED TO MAKEUP ICS/PCCS POOL LEVEL.	C	77.88	Y
U43-XHE-FO-MAKEUP	OPERATOR FAILS TO ACTUATE U43 IN MAKE UP MODE	C	2.95	N
U43-XHE-FO-PMPTRK	OPERATOR FAIL TO SUPPLY WATER FROM PUMP TRUCKS	C	2.27	N
B21-XHE-FO-6OPEN	OPERATOR FAILS TO OPEN 6/10 SRVS	C	1.67	N
XXX-XHE-FO-DEPRESS	OPERATOR FAILS TO RECOGNIZE NEED OF DEPRESSURIZATION	C	1.63	N
XXX-XHE-FO-LPMAKEUP	OP. FAILS TO RECOG. NEED FOR LOW PRESS. MAKEUP AFTER DEPRESSURIZATION	C	1.62	N
B32-XHE-FO-VENT	OPERATOR FAILS TO OPEN VENT	C	1.55	N
R21-XHE-FO-ADG	OPERATOR FAILS TO CONTROL THE LOADS ON ANCILLARY DG BUSES	C	1.38	N
R13-XHE-FO-ADG	OPERATOR FAILS TO ALIGN THE ADG BUSES TO UPS BUSES	C	1.21	N
C71-XHE-FO-SCRAM	OPERATOR FAILS TO PERFORM MANUAL SCRAM	C	1.12	N
P21-TRN-RE-HX1B	FAILURE TO RESTORE RCCW TRAIN 1B HX	A	1.06	N
P21-TRN-RE-HX2B	FAILURE TO RESTORE RCCW TRAIN 2B HX	A	1.06	N
P21-TRN-RE-HX3B	FAILURE TO RESTORE RCCW TRAIN 3B HX	A	1.06	N
P21-TRN-RE-PUMP1B	FAILURE TO RESTORE RCCW TRAIN 1B PUMP	A	1.06	N
P21-TRN-RE-PUMP2B	FAILURE TO RESTORE RCCW TRAIN 2B PUMP	A	1.06	N
P21-TRN-RE-PUMP3B	FAILURE TO RESTORE RCCW TRAIN 3B PUMP	A	1.06	N
P21-TRN-RE-HX1A	FAILURE TO RESTORE RCCW TRAIN 1A HX	A	1.05	N
P21-TRN-RE-HX2A	FAILURE TO RESTORE RCCW TRAIN 2A HX	A	1.05	N
P21-TRN-RE-HX3A	FAILURE TO RESTORE RCCW TRAIN 3A HX	A	1.05	N
P21-TRN-RE-PUMP1A	FAILURE TO RESTORE RCCW TRAIN 1A PUMP	A	1.05	N
P21-TRN-RE-PUMP2A	FAILURE TO RESTORE RCCW TRAIN 2A PUMP	A	1.05	N
P21-TRN-RE-PUMP3A	FAILURE TO RESTORE RCCW TRAIN 3A PUMP	A	1.05	N
R21-TRN-RE-FOADGA	FAILURE TO RESTORE FUEL OIL TRANSFER TRAIN FOR ADG-A	A	1.03	N
R21-TRN-RE-FOADGB	FAILURE TO RESTORE FUEL OIL TRANSFER TRAIN FOR ADG-A	A	1.03	N
U43-XHE-FO-2ND	OPERATOR FAILS TO ALIGN FPS CROSSTIE	C	1.02	N

Table 17.7-15

High Wind CDF At-Power Operator Actions - RAW

BASIC EVENT	DESCRIPTION	HRA TYPE	RAW	THRESHOLD
U43-XHE-FO-LPCI	OPERATOR FAILS TO ACTUATE U43 IN LPCI MODE	C	1.01	**N**
T10-XHE-FO-CONTVENT	OPERATOR FAILS TO ACTUATE CONTAINMENT VENTING	C	1	**N**
XXX-XHE-FO-RPVLDE	OP. FAILS TO RECOG. OR CHECK THE RPV DECREASING LEVEL	C	1	**N**
R21-XHE-FO-ADGCROSS	OPERATOR FAILS TO CROSS-TIE THE ANCILLARY DG BUSES	C	1	**N**
R21-TRN-RE-FODG1B	FAILURE TO RESTORE FUEL OIL TRANSFER TRAIN 1 FOR DG-B	A	1	**N**
R21-TRN-RE-FODG2B	FAILURE TO RESTORE FUEL OIL TRANSFER TRAIN 2 FOR DG-B	A	1	**N**
R21-TRN-RE-FODG1A	FAILURE TO RESTORE FUEL OIL TRANSFER TRAIN 1 FOR DG-A	A	1	**N**
R21-TRN-RE-FODG2A	FAILURE TO RESTORE FUEL OIL TRANSFER TRAIN 2 FOR DG-A	A	1	**N**
G21-XHE-FO-LPCI	OPERATOR FAILS TO ALIGN AND ACTUATE FAPCS IN LPCI MODE	C	1	**N**
E50-XHE-FO-EQU	OPERATOR FAILS TO ACTUATE GDCS	C	1	**N**
P41-TRN-RE-PUMP1A	FAILURE TO RESTORE PSW PUMP 1A	A	1	**N**
P41-TRN-RE-PUMP1B	FAILURE TO RESTORE PSW PUMP 1B	A	1	**N**
P41-TRN-RE-PUMP2A	FAILURE TO RESTORE PSW PUMP 2A	A	1	**N**
P41-TRN-RE-PUMP2B	FAILURE TO RESTORE PSW PUMP 2B	A	1	**N**
G21-XHE-FO-RSPC	OPERATOR FAILS TO RECOG. NEED FOR SPC	C	1	**N**

Table 17.7-16

High Wind CDF At-Power Operator Actions - FV

BASIC EVENT	DESCRIPTION	HRA TYPE	FV	THRESHOLD
XXX-XHE-FO-ICPCCS	OPERATOR FAILS TO RECOGNIZE THE NEED TO MAKEUP ICS/PCCS POOL LEVEL.	C	1.24E-01	Y
XXX-XHE-FO-DEPRESS	OPERATOR FAILS TO RECOGNIZE NEED OF DEPRESSURIZATION	C	1.21E-01	Y
XXX-XHE-FO-LPMAKEUP	OP. FAILS TO RECOG. NEED FOR LOW PRESS. MAKEUP AFTER DEPRESSURIZATION	C	1.19E-01	Y
B32-XHE-FO-VENT	OPERATOR FAILS TO OPEN VENT	C	1.18E-01	Y
U43-XHE-FO-PMPTRK	OPERATOR FAIL TO SUPPLY WATER FROM PUMP TRUCKS	C	3.48E-02	Y
U43-XHE-FO-MAKEUP	OPERATOR FAILS TO ACTUATE U43 IN MAKE UP MODE	C	3.20E-02	Y
C71-XHE-FO-SCRAM	OPERATOR FAILS TO PERFORM MANUAL SCRAM	C	1.36E-02	Y
R21-XHE-FO-ADG	OPERATOR FAILS TO CONTROL THE LOADS ON ANCILLARY DG BUSES	C	6.34E-03	N
R13-XHE-FO-ADG	OPERATOR FAILS TO ALIGN THE ADG BUSES TO UPS BUSES	C	3.43E-03	N
B21-XHE-FO-6OPEN	OPERATOR FAILS TO OPEN 6/10 SRVS	C	1.09E-03	N
R21-TRN-RE-FOADGA	FAILURE TO RESTORE FUEL OIL TRANSFER TRAIN FOR ADG-A	A	8.06E-04	N
R21-TRN-RE-FOADGB	FAILURE TO RESTORE FUEL OIL TRANSFER TRAIN FOR ADG-A	A	8.03E-04	N
P21-TRN-RE-HX1B	FAILURE TO RESTORE RCCW TRAIN 1B HX	A	5.01E-04	N
P21-TRN-RE-HX2B	FAILURE TO RESTORE RCCW TRAIN 2B HX	A	5.01E-04	N
P21-TRN-RE-HX3B	FAILURE TO RESTORE RCCW TRAIN 3B HX	A	5.01E-04	N
P21-TRN-RE-PUMP1B	FAILURE TO RESTORE RCCW TRAIN 1B PUMP	A	5.01E-04	N
P21-TRN-RE-PUMP2B	FAILURE TO RESTORE RCCW TRAIN 2B PUMP	A	5.01E-04	N
P21-TRN-RE-PUMP3B	FAILURE TO RESTORE RCCW TRAIN 3B PUMP	A	5.01E-04	N
P21-TRN-RE-HX1A	FAILURE TO RESTORE RCCW TRAIN 1A HX	A	4.21E-04	N
P21-TRN-RE-HX2A	FAILURE TO RESTORE RCCW TRAIN 2A HX	A	4.21E-04	N
P21-TRN-RE-HX3A	FAILURE TO RESTORE RCCW TRAIN 3A HX	A	4.21E-04	N
P21-TRN-RE-PUMP1A	FAILURE TO RESTORE RCCW TRAIN 1A PUMP	A	4.21E-04	N
P21-TRN-RE-PUMP2A	FAILURE TO RESTORE RCCW TRAIN 2A PUMP	A	4.21E-04	N
P21-TRN-RE-PUMP3A	FAILURE TO RESTORE RCCW TRAIN 3A PUMP	A	4.21E-04	N
U43-XHE-FO-2ND	OPERATOR FAILS TO ALIGN FPS CROSSTIE	C	3.38E-04	N
T10-XHE-FO-CONTVENT	OPERATOR FAILS TO ACTUATE CONTAINMENT VENTING	C	4.60E-05	N
U43-XHE-FO-LPCI	OPERATOR FAILS TO ACTUATE U43 IN LPCI MODE	C	2.38E-05	N

Table 17.7-16

High Wind CDF At-Power Operator Actions - FV

BASIC EVENT	DESCRIPTION	HRA TYPE	FV	THRESHOLD
XXX-XHE-FO-RPVLDE	OP. FAILS TO RECOG. OR CHECK THE RPV DECREASING LEVEL	C	2.07E-05	**N**
R21-XHE-FO-ADGCROSS	OPERATOR FAILS TO CROSS-TIE THE ANCILLARY DG BUSES	C	2.03E-05	**N**
R21-TRN-RE-FODG1B	FAILURE TO RESTORE FUEL OIL TRANSFER TRAIN 1 FOR DG-B	A	1.44E-05	**N**
R21-TRN-RE-FODG2B	FAILURE TO RESTORE FUEL OIL TRANSFER TRAIN 2 FOR DG-B	A	1.44E-05	**N**
R21-TRN-RE-FODG1A	FAILURE TO RESTORE FUEL OIL TRANSFER TRAIN 1 FOR DG-A	A	9.84E-06	**N**
R21-TRN-RE-FODG2A	FAILURE TO RESTORE FUEL OIL TRANSFER TRAIN 2 FOR DG-A	A	9.84E-06	**N**
G21-XHE-FO-LPCI	OPERATOR FAILS TO ALIGN AND ACTUATE FAPCS IN LPCI MODE	C	7.00E-06	**N**
E50-XHE-FO-EQU	OPERATOR FAILS TO ACTUATE GDCS	C	1.54E-06	**N**
P41-TRN-RE-PUMP1A	FAILURE TO RESTORE PSW PUMP 1A	A	1.46E-06	**N**
P41-TRN-RE-PUMP1B	FAILURE TO RESTORE PSW PUMP 1B	A	1.46E-06	**N**
P41-TRN-RE-PUMP2A	FAILURE TO RESTORE PSW PUMP 2A	A	1.46E-06	**N**
P41-TRN-RE-PUMP2B	FAILURE TO RESTORE PSW PUMP 2B	A	1.46E-06	**N**
G21-XHE-FO-RSPC	OPERATOR FAILS TO RECOG. NEED FOR SPC	C	1.41E-06	**N**

Table 17.7-17

High Wind LRF At-Power Operator Actions - RAW

BASIC EVENT	DESCRIPTION	HRA TYPE	RAW	THRESHOLD
XXX-XHE-FO-ICPCCS	OPERATOR FAILS TO RECOGNIZE THE NEED TO MAKEUP ICS/PCCS POOL LEVEL.	C	105.52	Y
R21-XHE-FO-ADG	OPERATOR FAILS TO CONTROL THE LOADS ON ANCILLARY DG BUSES	C	3.35	N
U43-XHE-FO-MAKEUP	OPERATOR FAILS TO ACTUATE U43 IN MAKE UP MODE	C	3.13	N
U43-XHE-FO-PMPTRK	OPERATOR FAIL TO SUPPLY WATER FROM PUMP TRUCKS	C	2.44	N
R13-XHE-FO-ADG	OPERATOR FAILS TO ALIGN THE ADG BUSES TO UPS BUSES	C	2.44	N
C71-XHE-FO-SCRAM	OPERATOR FAILS TO PERFORM MANUAL SCRAM	C	1.84	N
P21-TRN-RE-HX1B	FAILURE TO RESTORE RCCW TRAIN 1B HX	A	1.62	N
P21-TRN-RE-HX2B	FAILURE TO RESTORE RCCW TRAIN 2B HX	A	1.62	N
P21-TRN-RE-HX3B	FAILURE TO RESTORE RCCW TRAIN 3B HX	A	1.62	N
P21-TRN-RE-PUMP1B	FAILURE TO RESTORE RCCW TRAIN 1B PUMP	A	1.62	N
P21-TRN-RE-PUMP2B	FAILURE TO RESTORE RCCW TRAIN 2B PUMP	A	1.62	N
P21-TRN-RE-PUMP3B	FAILURE TO RESTORE RCCW TRAIN 3B PUMP	A	1.62	N
P21-TRN-RE-HX1A	FAILURE TO RESTORE RCCW TRAIN 1A HX	A	1.61	N
P21-TRN-RE-HX2A	FAILURE TO RESTORE RCCW TRAIN 2A HX	A	1.61	N
P21-TRN-RE-HX3A	FAILURE TO RESTORE RCCW TRAIN 3A HX	A	1.61	N
P21-TRN-RE-PUMP1A	FAILURE TO RESTORE RCCW TRAIN 1A PUMP	A	1.61	N
P21-TRN-RE-PUMP2A	FAILURE TO RESTORE RCCW TRAIN 2A PUMP	A	1.61	N
P21-TRN-RE-PUMP3A	FAILURE TO RESTORE RCCW TRAIN 3A PUMP	A	1.61	N
G21-XHE-FO-RSPC	OPERATOR FAILS TO RECOG. NEED FOR SPC	C	1.26	N
P41-TRN-RE-PUMP1A	FAILURE TO RESTORE PSW PUMP 1A	A	1.23	N
P41-TRN-RE-PUMP2A	FAILURE TO RESTORE PSW PUMP 2A	A	1.23	N
P41-TRN-RE-PUMP1B	FAILURE TO RESTORE PSW PUMP 1B	A	1.22	N
P41-TRN-RE-PUMP2B	FAILURE TO RESTORE PSW PUMP 2B	A	1.22	N
R21-TRN-RE-FOADGA	FAILURE TO RESTORE FUEL OIL TRANSFER TRAIN FOR ADG-A	A	1.21	N
R21-TRN-RE-FOADGB	FAILURE TO RESTORE FUEL OIL TRANSFER TRAIN FOR ADG-A	A	1.21	N
G21-XHE-FO-SPC	OPERATOR FAILS TO MANUALLY INI. FAPCS IN SPC MODE	C	1.2	N
B32-XHE-FO-VENT	OPERATOR FAILS TO OPEN VENT	C	1.09	N

Table 17.7-17

High Wind LRF At-Power Operator Actions - RAW

BASIC EVENT	DESCRIPTION	HRA TYPE	RAW	THRESHOLD
T10-XHE-FO-CONTVENT	OPERATOR FAILS TO ACTUATE CONTAINMENT VENTING	C	1.08	**N**
U43-XHE-FO-2ND	OPERATOR FAILS TO ALIGN FPS CROSSTIE	C	1.02	**N**
XXX-XHE-FO-DEPRESS	OPERATOR FAILS TO RECOGNIZE NEED OF DEPRESSURIZATION	C	1.01	**N**
R21-TRN-RE-FODG1B	FAILURE TO RESTORE FUEL OIL TRANSFER TRAIN 1 FOR DG-B	A	1.01	**N**
R21-TRN-RE-FODG2B	FAILURE TO RESTORE FUEL OIL TRANSFER TRAIN 2 FOR DG-B	A	1.01	**N**
R21-TRN-RE-FODG1A	FAILURE TO RESTORE FUEL OIL TRANSFER TRAIN 1 FOR DG-A	A	1.01	**N**
R21-TRN-RE-FODG2A	FAILURE TO RESTORE FUEL OIL TRANSFER TRAIN 2 FOR DG-A	A	1.01	**N**
XXX-XHE-FO-RPVLDE	OP. FAILS TO RECOG. OR CHECK THE RPV DECREASING LEVEL	C	1.01	**N**
E50-XHE-FO-EQU	OPERATOR FAILS TO ACTUATE GDCS	C	1.01	**N**
XXX-XHE-FO-LPMAKEUP	OP. FAILS TO RECOG. NEED FOR LOW PRESS. MAKEUP AFTER DEPRESSURIZATION	C	1	**N**
E50-XHE-FO-DLTR2	OPERATOR FAILS TO ENABLE TRAIN 2	C	1	**N**
U43-XHE-FO-LPCI	OPERATOR FAILS TO ACTUATE U43 IN LPCI MODE	C	1	**N**

Table 17.7-18

High Wind LRF At-Power Operator Actions - FV

BASIC EVENT	DESCRIPTION	HRA TYPE	FV	THRESHOLD
XXX-XHE-FO-ICPCCS	OPERATOR FAILS TO RECOGNIZE THE NEED TO MAKEUP ICS/PCCS POOL LEVEL.	C	1.70E-01	Y
C71-XHE-FO-SCRAM	OPERATOR FAILS TO PERFORM MANUAL SCRAM	C	9.35E-02	Y
U43-XHE-FO-PMPTRK	OPERATOR FAIL TO SUPPLY WATER FROM PUMP TRUCKS	C	3.98E-02	Y
R21-XHE-FO-ADG	OPERATOR FAILS TO CONTROL THE LOADS ON ANCILLARY DG BUSES	C	3.88E-02	Y
U43-XHE-FO-MAKEUP	OPERATOR FAILS TO ACTUATE U43 IN MAKE UP MODE	C	3.52E-02	Y
R13-XHE-FO-ADG	OPERATOR FAILS TO ALIGN THE ADG BUSES TO UPS BUSES	C	2.37E-02	Y
B32-XHE-FO-VENT	OPERATOR FAILS TO OPEN VENT	C	1.86E-02	Y
R21-TRN-RE-FOADGA	FAILURE TO RESTORE FUEL OIL TRANSFER TRAIN FOR ADG-A	A	5.26E-03	N
R21-TRN-RE-FOADGB	FAILURE TO RESTORE FUEL OIL TRANSFER TRAIN FOR ADG-A	A	5.26E-03	N
P21-TRN-RE-HX1B	FAILURE TO RESTORE RCCW TRAIN 1B HX	A	5.08E-03	N
P21-TRN-RE-HX2B	FAILURE TO RESTORE RCCW TRAIN 2B HX	A	5.08E-03	N
P21-TRN-RE-HX3B	FAILURE TO RESTORE RCCW TRAIN 3B HX	A	5.08E-03	N
P21-TRN-RE-PUMP1B	FAILURE TO RESTORE RCCW TRAIN 1B PUMP	A	5.08E-03	N
P21-TRN-RE-PUMP2B	FAILURE TO RESTORE RCCW TRAIN 2B PUMP	A	5.08E-03	N
P21-TRN-RE-PUMP3B	FAILURE TO RESTORE RCCW TRAIN 3B PUMP	A	5.08E-03	N
P21-TRN-RE-HX1A	FAILURE TO RESTORE RCCW TRAIN 1A HX	A	5.03E-03	N
P21-TRN-RE-HX2A	FAILURE TO RESTORE RCCW TRAIN 2A HX	A	5.03E-03	N
P21-TRN-RE-HX3A	FAILURE TO RESTORE RCCW TRAIN 3A HX	A	5.03E-03	N
P21-TRN-RE-PUMP1A	FAILURE TO RESTORE RCCW TRAIN 1A PUMP	A	5.03E-03	N
P21-TRN-RE-PUMP2A	FAILURE TO RESTORE RCCW TRAIN 2A PUMP	A	5.03E-03	N
P21-TRN-RE-PUMP3A	FAILURE TO RESTORE RCCW TRAIN 3A PUMP	A	5.03E-03	N
G21-XHE-FO-RSPC	OPERATOR FAILS TO RECOG. NEED FOR SPC	C	4.34E-03	N
XXX-XHE-FO-DEPRESS	OPERATOR FAILS TO RECOGNIZE NEED OF DEPRESSURIZATION	C	2.85E-03	N
P41-TRN-RE-PUMP1A	FAILURE TO RESTORE PSW PUMP 1A	A	1.86E-03	N
P41-TRN-RE-PUMP2A	FAILURE TO RESTORE PSW PUMP 2A	A	1.86E-03	N
P41-TRN-RE-PUMP1B	FAILURE TO RESTORE PSW PUMP 1B	A	1.82E-03	N
P41-TRN-RE-PUMP2B	FAILURE TO RESTORE PSW PUMP 2B	A	1.82E-03	N

Table 17.7-18

High Wind LRF At-Power Operator Actions - FV

BASIC EVENT	DESCRIPTION	HRA TYPE	FV	THRESHOLD
T10-XHE-FO-CONTVENT	OPERATOR FAILS TO ACTUATE CONTAINMENT VENTING	C	1.41E-03	**N**
G21-XHE-FO-SPC	OPERATOR FAILS TO MANUALLY INI. FAPCS IN SPC MODE	C	3.28E-04	**N**
U43-XHE-FO-2ND	OPERATOR FAILS TO ALIGN FPS CROSSTIE	C	3.22E-04	**N**
XXX-XHE-FO-LPMAKEUP	OP. FAILS TO RECOG. NEED FOR LOW PRESS. MAKEUP AFTER DEPRESSURIZATION	C	2.75E-04	**N**
R21-TRN-RE-FODG1B	FAILURE TO RESTORE FUEL OIL TRANSFER TRAIN 1 FOR DG-B	A	1.61E-04	**N**
R21-TRN-RE-FODG2B	FAILURE TO RESTORE FUEL OIL TRANSFER TRAIN 2 FOR DG-B	A	1.61E-04	**N**
R21-TRN-RE-FODG1A	FAILURE TO RESTORE FUEL OIL TRANSFER TRAIN 1 FOR DG-A	A	1.58E-04	**N**
R21-TRN-RE-FODG2A	FAILURE TO RESTORE FUEL OIL TRANSFER TRAIN 2 FOR DG-A	A	1.58E-04	**N**
XXX-XHE-FO-RPVLDE	OP. FAILS TO RECOG. OR CHECK THE RPV DECREASING LEVEL	C	1.41E-04	**N**
E50-XHE-FO-EQU	OPERATOR FAILS TO ACTUATE GDCS	C	1.06E-05	**N**
E50-XHE-FO-DLTR2	OPERATOR FAILS TO ENABLE TRAIN 2	C	5.02E-06	**N**
U43-XHE-FO-LPCI	OPERATOR FAILS TO ACTUATE U43 IN LPCI MODE	C	1.25E-06	**N**

Table 17.7-19

Fire CDF & LRF Shutdown Operator Actions - RAW

BASIC EVENT	DESCRIPTION	HRA TYPE	RAW	THRESHOLD
XXX-XHE-FO-LPMAKEUP	OP. FAILS TO RECOG. NEED FOR LOW PRESS. MAKEUP AFTER DEPRESSURIZATION	C	25.96	Y
C12-XHE-FO-LEVEL2	OPERATOR FAILS TO BACK-UP CRD ACTUATION	C	7.24	Y
U43-XHE-FO-LPCI	OPERATOR FAILS TO ACTUATE U43 IN LPCI MODE	C	6.89	Y
R21-XHE-FO-ADG	OPERATOR FAILS TO CONTROL THE LOADS ON ANCILLARY DG BUSES	C	5.54	Y
P21-TRN-RE-HX1A	FAILURE TO RESTORE RCCW TRAIN 1A HX	A	2.28	**N**
P21-TRN-RE-HX2A	FAILURE TO RESTORE RCCW TRAIN 2A HX	A	2.28	**N**
P21-TRN-RE-HX3A	FAILURE TO RESTORE RCCW TRAIN 3A HX	A	2.28	**N**
P21-TRN-RE-PUMP1A	FAILURE TO RESTORE RCCW TRAIN 1A PUMP	A	2.28	**N**
P21-TRN-RE-PUMP2A	FAILURE TO RESTORE RCCW TRAIN 2A PUMP	A	2.28	**N**
P21-TRN-RE-PUMP3A	FAILURE TO RESTORE RCCW TRAIN 3A PUMP	A	2.28	**N**
P21-TRN-RE-HX1B	FAILURE TO RESTORE RCCW TRAIN 1B HX	A	2.17	**N**
P21-TRN-RE-HX2B	FAILURE TO RESTORE RCCW TRAIN 2B HX	A	2.17	**N**
P21-TRN-RE-HX3B	FAILURE TO RESTORE RCCW TRAIN 3B HX	A	2.17	**N**
P21-TRN-RE-PUMP1B	FAILURE TO RESTORE RCCW TRAIN 1B PUMP	A	2.17	**N**
P21-TRN-RE-PUMP2B	FAILURE TO RESTORE RCCW TRAIN 2B PUMP	A	2.17	**N**
P21-TRN-RE-PUMP3B	FAILURE TO RESTORE RCCW TRAIN 3B PUMP	A	2.17	**N**
P54-BV_-RE-F013A	RESTERATION ERROR OF F013A	A	1.82	**N**
C12-BV_-RE-F013A	MISPOSITION OF VALVE F013A	A	1.61	**N**
C12-BV_-RE-F013B	MISPOSITION OF VALVE F013B	A	1.61	**N**
C12-BV_-RE-F015A	MISPOSITION OF VALVE F015A	A	1.61	**N**
C12-BV_-RE-F015B	MISPOSITION OF VALVE F015B	A	1.61	**N**
R21-TRN-RE-FOADGA	FAILURE TO RESTORE FUEL OIL TRANSFER TRAIN FOR ADG-A	A	1.55	**N**
P41-TRN-RE-PUMP2B	FAILURE TO RESTORE PSW PUMP 2B	A	1.54	**N**
P41-TRN-RE-PUMP1B	FAILURE TO RESTORE PSW PUMP 1B	A	1.54	**N**
P41-TRN-RE-PUMP2A	FAILURE TO RESTORE PSW PUMP 2A	A	1.52	**N**
P41-TRN-RE-PUMP1A	FAILURE TO RESTORE PSW PUMP 1A	A	1.51	**N**
R21-TRN-RE-FOADGB	FAILURE TO RESTORE FUEL OIL TRANSFER TRAIN FOR ADG-A	A	1.5	**N**

Table 17.7-19

Fire CDF & LRF Shutdown Operator Actions - RAW

BASIC EVENT	DESCRIPTION	HRA TYPE	RAW	THRESHOLD
R21-XHE-FO-ADGCROSS	OPERATOR FAILS TO CROSS-TIE THE ANCILLARY DG BUSES	C	1.5	**N**
P52-XHE-CC-0001-B	OPERATOR FAILS TO OPEN STANDBY TRAIN AOV 0001-B	C	1.43	**N**
G31-TRN-RE-TRAINB	RESTORATION ERRORS RWCU/SDC TRAIN B	A	1.42	**N**
C12-BV_-RE-F018A	MISPOSITION OF VALVE F018A	A	1.3	**N**
C12-BV_-RE-F021A	MISPOSITION OF VALVE F021A	A	1.3	**N**
C12-BV_-RE-F003B	MISPOSITION OF VALVE F003B	A	1.18	**N**
C12-BV_-RE-F018B	MISPOSITION OF VALVE FO18B	A	1.18	**N**
C12-BV_-RE-F021B	MISPOSITION OF VALVE F021B	A	1.18	**N**
B32-XHE-FO-VENT	OPERATOR FAILS TO OPEN VENT	C	1.16	**N**
G21-XHE-FO-LPCI	OPERATOR FAILS TO ALIGN AND ACTUATE FAPCS IN LPCI MODE	C	1.08	**N**
R21-TRN-RE-FODG1A	FAILURE TO RESTORE FUEL OIL TRANSFER TRAIN 1 FOR DG-A	A	1.02	**N**
R21-TRN-RE-FODG2A	FAILURE TO RESTORE FUEL OIL TRANSFER TRAIN 2 FOR DG-A	A	1.02	**N**
R21-TRN-RE-FODG1B	FAILURE TO RESTORE FUEL OIL TRANSFER TRAIN 1 FOR DG-B	A	1.02	**N**
R21-TRN-RE-FODG2B	FAILURE TO RESTORE FUEL OIL TRANSFER TRAIN 2 FOR DG-B	A	1.02	**N**
P51-XHE-FO-0001-CD	OPERATOR FAILS TO ALIGN ONE BACKUP CMP TO STANDBY	C	1.01	**N**
P51-CMP-RE-0001-B	SERVICE AIR SYSTEM COMPRESSOR RESTORATION ERROR	A	1.01	**N**
P51-CMP-RE-0001-D	SERVICE AIR SYSTEM COMPRESSOR RESTORATION ERROR	A	1.01	**N**
P51-CMP-RE-0001-C	SERVICE AIR SYSTEM COMPRESSOR RESTORATION ERROR	A	1	**N**
XXX-XHE-FO-RPVLDE	OP. FAILS TO RECOG. OR CHECK THE RPV DECREASING LEVEL	C	1	**N**
P51-XHE-FO-CMP	OPERATOR FAIL TO ISOLATE ONE COMPRESSOR TRAIN GIVEN OTHER FAILED	C	1	**N**
E50-XHE-FO-EQU	OPERATOR FAILS TO ACTUATE GDCS	C	1	**N**
E50-XHE-FO-GDCS	OPERATOR FAILS TO ACTUATE GDCS	C	1	**N**

Table 17.7-20

Fire CDF & LRF Shutdown Operator Actions - FV

BASIC EVENT	DESCRIPTION	HRA TYPE	FV	THRESHOLD
XXX-XHE-FO-LPMAKEUP	OP. FAILS TO RECOG. NEED FOR LOW PRESS. MAKEUP AFTER DEPRESSURIZATION	C	4.09E-01	Y
C12-XHE-FO-LEVEL2	OPERATOR FAILS TO BACK-UP CRD ACTUATION	C	2.07E-01	Y
R21-XHE-FO-ADG	OPERATOR FAILS TO CONTROL THE LOADS ON ANCILLARY DG BUSES	C	7.46E-02	Y
B32-XHE-FO-VENT	OPERATOR FAILS TO OPEN VENT	C	3.52E-02	Y
C12-BV_-RE-F013A	MISPOSITION OF VALVE F013A	A	3.13E-02	Y
C12-BV_-RE-F013B	MISPOSITION OF VALVE F013B	A	3.13E-02	Y
C12-BV_-RE-F015A	MISPOSITION OF VALVE F015A	A	3.13E-02	Y
C12-BV_-RE-F015B	MISPOSITION OF VALVE F015B	A	3.13E-02	Y
R21-TRN-RE-FOADGA	FAILURE TO RESTORE FUEL OIL TRANSFER TRAIN FOR ADG-A	A	1.37E-02	Y
R21-TRN-RE-FOADGB	FAILURE TO RESTORE FUEL OIL TRANSFER TRAIN FOR ADG-A	A	1.25E-02	Y
P21-TRN-RE-HX1A	FAILURE TO RESTORE RCCW TRAIN 1A HX	A	1.05E-02	Y
P21-TRN-RE-HX2A	FAILURE TO RESTORE RCCW TRAIN 2A HX	A	1.05E-02	Y
P21-TRN-RE-HX3A	FAILURE TO RESTORE RCCW TRAIN 3A HX	A	1.05E-02	Y
P21-TRN-RE-PUMP1A	FAILURE TO RESTORE RCCW TRAIN 1A PUMP	A	1.05E-02	Y
P21-TRN-RE-PUMP2A	FAILURE TO RESTORE RCCW TRAIN 2A PUMP	A	1.05E-02	Y
P21-TRN-RE-PUMP3A	FAILURE TO RESTORE RCCW TRAIN 3A PUMP	A	1.05E-02	Y
U43-XHE-FO-LPCI	OPERATOR FAILS TO ACTUATE U43 IN LPCI MODE	C	9.59E-03	**N**
P21-TRN-RE-HX1B	FAILURE TO RESTORE RCCW TRAIN 1B HX	A	9.58E-03	**N**
P21-TRN-RE-HX2B	FAILURE TO RESTORE RCCW TRAIN 2B HX	A	9.58E-03	**N**
P21-TRN-RE-HX3B	FAILURE TO RESTORE RCCW TRAIN 3B HX	A	9.58E-03	**N**
P21-TRN-RE-PUMP1B	FAILURE TO RESTORE RCCW TRAIN 1B PUMP	A	9.58E-03	**N**
P21-TRN-RE-PUMP2B	FAILURE TO RESTORE RCCW TRAIN 2B PUMP	A	9.58E-03	**N**
P21-TRN-RE-PUMP3B	FAILURE TO RESTORE RCCW TRAIN 3B PUMP	A	9.58E-03	**N**
R21-XHE-FO-ADGCROSS	OPERATOR FAILS TO CROSS-TIE THE ANCILLARY DG BUSES	C	8.26E-03	**N**
P52-XHE-CC-0001-B	OPERATOR FAILS TO OPEN STANDBY TRAIN AOV 0001-B	C	7.79E-03	**N**
P41-TRN-RE-PUMP2B	FAILURE TO RESTORE PSW PUMP 2B	A	4.44E-03	**N**
P41-TRN-RE-PUMP1B	FAILURE TO RESTORE PSW PUMP 1B	A	4.39E-03	**N**

Table 17.7-20

Fire CDF & LRF Shutdown Operator Actions - FV

BASIC EVENT	DESCRIPTION	HRA TYPE	FV	THRESHOLD
P41-TRN-RE-PUMP2A	FAILURE TO RESTORE PSW PUMP 2A	A	4.26E-03	N
P41-TRN-RE-PUMP1A	FAILURE TO RESTORE PSW PUMP 1A	A	4.21E-03	N
C12-BV_-RE-F018A	MISPOSITION OF VALVE F018A	A	3.65E-03	N
C12-BV_-RE-F021A	MISPOSITION OF VALVE F021A	A	3.65E-03	N
G31-TRN-RE-TRAINB	RESTORATION ERRORS RWCU/SDC TRAIN B	A	3.47E-03	N
P54-BV_-RE-F013A	RESTERATION ERROR OF F013A	A	3.36E-03	N
C12-BV_-RE-F003B	MISPOSITION OF VALVE F003B	A	2.22E-03	N
C12-BV_-RE-F018B	MISPOSITION OF VALVE FO18B	A	2.22E-03	N
C12-BV_-RE-F021B	MISPOSITION OF VALVE F021B	A	2.22E-03	N
R21-TRN-RE-FODG1A	FAILURE TO RESTORE FUEL OIL TRANSFER TRAIN 1 FOR DG-A	A	4.78E-04	N
R21-TRN-RE-FODG2A	FAILURE TO RESTORE FUEL OIL TRANSFER TRAIN 2 FOR DG-A	A	4.78E-04	N
R21-TRN-RE-FODG1B	FAILURE TO RESTORE FUEL OIL TRANSFER TRAIN 1 FOR DG-B	A	4.29E-04	N
R21-TRN-RE-FODG2B	FAILURE TO RESTORE FUEL OIL TRANSFER TRAIN 2 FOR DG-B	A	4.29E-04	N
P51-XHE-FO-0001-CD	OPERATOR FAILS TO ALIGN ONE BACKUP CMP TO STANDBY	C	2.54E-04	N
G21-XHE-FO-LPCI	OPERATOR FAILS TO ALIGN AND ACTUATE FAPCS IN LPCI MODE	C	1.25E-04	N
P51-CMP-RE-0001-B	SERVICE AIR SYSTEM COMPRESSOR RESTORATION ERROR	A	9.05E-05	N
P51-CMP-RE-0001-D	SERVICE AIR SYSTEM COMPRESSOR RESTORATION ERROR	A	4.78E-05	N
P51-CMP-RE-0001-C	SERVICE AIR SYSTEM COMPRESSOR RESTORATION ERROR	A	3.72E-05	N
XXX-XHE-FO-RPVLDE	OP. FAILS TO RECOG. OR CHECK THE RPV DECREASING LEVEL	C	4.07E-06	N
P51-XHE-FO-CMP	OPERATOR FAIL TO ISOLATE ONE COMPRESSOR TRAIN GIVEN OTHER FAILED	C	1.35E-06	N
E50-XHE-FO-EQU	OPERATOR FAILS TO ACTUATE GDCS	C	2.09E-07	N
E50-XHE-FO-GDCS	OPERATOR FAILS TO ACTUATE GDCS	C	2.09E-07	N

Table 17.7-21

Flood CDF & LRF Shutdown Operator Actions - RAW

BASIC EVENT	DESCRIPTION	HRA TYPE	RAW	THRESHOLD
XXX-XHE-FO-LPMAKEUP	OP. FAILS TO RECOG. NEED FOR LOW PRESS. MAKEUP AFTER DEPRESSURIZATION	C	18.39	Y
U43-XHE-FO-LPCI	OPERATOR FAILS TO ACTUATE U43 IN LPCI MODE	C	11.2	Y
C12-XHE-FO-LEVEL2	OPERATOR FAILS TO BACK-UP CRD ACTUATION	C	6.65	Y
C12-BV_-RE-F064	MISPOSITION OF VALVE F064	A	2.99	**N**
C12-BV_-RE-F013A	MISPOSITION OF VALVE F013A	A	1.55	**N**
C12-BV_-RE-F013B	MISPOSITION OF VALVE F013B	A	1.55	**N**
C12-BV_-RE-F015A	MISPOSITION OF VALVE F015A	A	1.55	**N**
C12-BV_-RE-F015B	MISPOSITION OF VALVE F015B	A	1.55	**N**
G21-XHE-FO-LPCI	OPERATOR FAILS TO RECOG. NEED FOR SPC	C	1.46	**N**
C12-BV_-RE-F018A	MISPOSITION OF VALVE F018A	A	1.25	**N**
C12-BV_-RE-F021A	MISPOSITION OF VALVE F021A	A	1.25	**N**
C12-BV_-RE-F003B	MISPOSITION OF VALVE F003B	A	1.16	**N**
C12-BV_-RE-F018B	MISPOSITION OF VALVE FO18B	A	1.16	**N**
C12-BV_-RE-F021B	MISPOSITION OF VALVE F021B	A	1.16	**N**
B32-XHE-FO-VENT	OPERATOR FAILS TO OPEN VENT	C	1.01	**N**
P41-TRN-RE-PUMP2A	FAILURE TO RESTORE PSW PUMP 2A	A	1.01	**N**
P41-TRN-RE-PUMP2B	FAILURE TO RESTORE PSW PUMP 2B	A	1.01	**N**
P22-TRN-RE-PUMP1C	FAILURE TO RESTORE TCCW PUMP 1C	A	1	**N**
P22-XHE-FO-HX	FAILURE TO ALIGN TCCW HX	C	1	**N**
P41-XHE-FO-TCCWHX	FAILURE TO MANUALLY ALIGN STANDBY TCCW HX	C	1	**N**
P52-XHE-CC-0001-B	OPERATOR FAILS TO OPEN STANDBY TRAIN AOV 0001-B	C	1	**N**
XXX-XHE-FO-RPVLDE	OP. FAILS TO RECOG. OR CHECK THE RPV DECREASING LEVEL	C	1	**N**
P51-XHE-FO-0001-CD	OPERATOR FAILS TO ALIGN ONE BACKUP CMP TO STANDBY	C	1	**N**
P51-CMP-RE-0001-B	SERVICE AIR SYSTEM COMPRESSOR RESTORATION ERROR	A	1	**N**

Table 17.7-22

Flood CDF & LRF Shutdown Operator Actions - FV

BASIC EVENT	DESCRIPTION	HRA TYPE	FV	THRESHOLD
XXX-XHE-FO-LPMAKEUP	OP. FAILS TO RECOG. NEED FOR LOW PRESS. MAKEUP AFTER DEPRESSURIZATION	C	2.85E-01	Y
C12-XHE-FO-LEVEL2	OPERATOR FAILS TO ACTUATE INJECTION BYPASS	C	1.87E-01	Y
C12-BV_-RE-F064	MISPOSITION OF VALVE F064	A	1.01E-01	Y
C12-BV_-RE-F013A	MISPOSITION OF VALVE F013A	A	2.78E-02	Y
C12-BV_-RE-F013B	MISPOSITION OF VALVE F013B	A	2.78E-02	Y
C12-BV_-RE-F015A	MISPOSITION OF VALVE F015A	A	2.78E-02	Y
C12-BV_-RE-F015B	MISPOSITION OF VALVE F015B	A	2.78E-02	Y
U43-XHE-FO-LPCI	OPERATOR FAILS TO ACTUATE U43 IN LPCI MODE	C	1.65E-02	Y
C12-BV_-RE-F018A	MISPOSITION OF VALVE F018A	A	3.08E-03	N
C12-BV_-RE-F021A	MISPOSITION OF VALVE F021A	A	3.08E-03	N
B32-XHE-FO-VENT	OPERATOR FAILS TO OPEN VENT	C	2.73E-03	N
C12-BV_-RE-F003B	MISPOSITION OF VALVE F003B	A	1.93E-03	N
C12-BV_-RE-F018B	MISPOSITION OF VALVE FO18B	A	1.93E-03	N
C12-BV_-RE-F021B	MISPOSITION OF VALVE F021B	A	1.93E-03	N
G21-XHE-FO-LPCI	OPERATOR FAILS TO ALIGN AND ACTUATE FAPCS IN LPCI MODE	C	7.45E-04	N
P41-TRN-RE-PUMP2A	FAILURE TO RESTORE PSW PUMP 2A	A	1.10E-04	N
P41-TRN-RE-PUMP2B	FAILURE TO RESTORE PSW PUMP 2B	A	1.10E-04	N
P22-TRN-RE-PUMP1C	FAILURE TO RESTORE TCCW PUMP 1C	A	3.32E-05	N
P22-XHE-FO-HX	FAILURE TO RESTORE PSW PUMP 1A	C	3.10E-05	N
P41-XHE-FO-TCCWHX	FAILURE TO MANUALLY ALIGN STANDBY TCCW HX	C	3.10E-05	N
P52-XHE-CC-0001-B	RESTERATION ERROR OF F013A	C	3.03E-05	N
XXX-XHE-FO-RPVLDE	OP. FAILS TO RECOG. OR CHECK THE RPV DECREASING LEVEL	C	5.03E-06	N
P51-XHE-FO-0001-CD	OPERATOR ACTION TO CONNECT ALTERNATE COOLING GIVEN RCCW FAILED	C	2.39E-06	N
P51-CMP-RE-0001-B	SERVICE AIR SYSTEM COMPRESSOR RESTORATION ERROR	A	3.83E-07	N

Table 17.7-23

High Winds CDF & LRF Shutdown Operator Actions - RAW

BASIC EVENT	DESCRIPTION	HRA TYPE	RAW	THRESHOLD
XXX-XHE-FO-LPMAKEUP	OP. FAILS TO RECOG. NEED FOR LOW PRESS. MAKEUP AFTER DEPRESSURIZATION	C	30.47	Y
U43-XHE-FO-LPCI	OPERATOR FAILS TO ACTUATE U43 IN LPCI MODE	C	3.73	N
R21-XHE-FO-ADG	OPERATOR FAILS TO CONTROL THE LOADS ON ANCILLARY DG BUSES	C	3.15	N
P21-TRN-RE-HX1A	FAILURE TO RESTORE RCCW TRAIN 1A HX	A	1.33	N
P21-TRN-RE-HX2A	FAILURE TO RESTORE RCCW TRAIN 2A HX	A	1.33	N
P21-TRN-RE-HX3A	FAILURE TO RESTORE RCCW TRAIN 3A HX	A	1.33	N
P21-TRN-RE-PUMP1A	FAILURE TO RESTORE RCCW TRAIN 1A PUMP	A	1.33	N
P21-TRN-RE-PUMP2A	FAILURE TO RESTORE RCCW TRAIN 2A PUMP	A	1.33	N
P21-TRN-RE-PUMP3A	FAILURE TO RESTORE RCCW TRAIN 3A PUMP	A	1.33	N
P21-TRN-RE-HX1B	FAILURE TO RESTORE RCCW TRAIN 1B HX	A	1.33	N
P21-TRN-RE-HX2B	FAILURE TO RESTORE RCCW TRAIN 2B HX	A	1.33	N
P21-TRN-RE-HX3B	FAILURE TO RESTORE RCCW TRAIN 3B HX	A	1.33	N
P21-TRN-RE-PUMP1B	FAILURE TO RESTORE RCCW TRAIN 1B PUMP	A	1.33	N
P21-TRN-RE-PUMP2B	FAILURE TO RESTORE RCCW TRAIN 2B PUMP	A	1.33	N
P21-TRN-RE-PUMP3B	FAILURE TO RESTORE RCCW TRAIN 3B PUMP	A	1.33	N
R21-TRN-RE-FOADGA	FAILURE TO RESTORE FUEL OIL TRANSFER TRAIN FOR ADG-A	A	1.3	N
R21-XHE-FO-ADGCROSS	OPERATOR FAILS TO CROSS-TIE THE ANCILLARY DG BUSES	C	1.29	N
R21-TRN-RE-FOADGB	FAILURE TO RESTORE FUEL OIL TRANSFER TRAIN FOR ADG-A	A	1.26	N
G21-XHE-FO-LPCI	OPERATOR FAILS TO ALIGN AND ACTUATE FAPCS IN LPCI MODE	C	1.24	N
P41-TRN-RE-PUMP1B	FAILURE TO RESTORE PSW PUMP 1B	A	1.06	N
P41-TRN-RE-PUMP2B	FAILURE TO RESTORE PSW PUMP 2B	A	1.06	N
P41-TRN-RE-PUMP1A	FAILURE TO RESTORE PSW PUMP 1A	A	1.05	N
P41-TRN-RE-PUMP2A	FAILURE TO RESTORE PSW PUMP 2A	A	1.05	N
B32-XHE-FO-VENT	OPERATOR FAILS TO OPEN VENT	C	1.02	N
R21-TRN-RE-FODG1A	FAILURE TO RESTORE FUEL OIL TRANSFER TRAIN 1 FOR DG-A	A	1	N
R21-TRN-RE-FODG1B	FAILURE TO RESTORE FUEL OIL TRANSFER TRAIN 1 FOR DG-B	A	1	N
R21-TRN-RE-FODG2A	FAILURE TO RESTORE FUEL OIL TRANSFER TRAIN 2 FOR DG-A	A	1	N

Table 17.7-23

High Winds CDF & LRF Shutdown Operator Actions - RAW

BASIC EVENT	DESCRIPTION	HRA TYPE	RAW	THRESHOLD
R21-TRN-RE-FODG2B	FAILURE TO RESTORE FUEL OIL TRANSFER TRAIN 2 FOR DG-B	A	1	**N**
XXX-XHE-FO-RPVLDE	OP. FAILS TO RECOG. OR CHECK THE RPV DECREASING LEVEL	C	1	**N**
E50-XHE-FO-EQU	OPERATOR FAILS TO ACTUATE GDCS	C	1	**N**
E50-XHE-FO-GDCS	OPERATOR FAILS TO ACTUATE GDCS	C	1	**N**

Table 17.7-24

High Winds CDF & LRF Shutdown Operator Actions - FV

BASIC EVENT	DESCRIPTION	HRA TYPE	FV	THRESHOLD
XXX-XHE-FO-LPMAKEUP	OP. FAILS TO RECOG. NEED FOR LOW PRESS. MAKEUP AFTER DEPRESSURIZATION	C	4.82E-01	Y
R21-XHE-FO-ADG	OPERATOR FAILS TO CONTROL THE LOADS ON ANCILLARY DG BUSES	C	3.53E-02	Y
B32-XHE-FO-VENT	OPERATOR FAILS TO OPEN VENT	C	7.27E-03	N
R21-TRN-RE-FOADGA	FAILURE TO RESTORE FUEL OIL TRANSFER TRAIN FOR ADG-A	A	6.53E-03	N
R21-TRN-RE-FOADGB	FAILURE TO RESTORE FUEL OIL TRANSFER TRAIN FOR ADG-A	A	4.91E-03	N
R21-XHE-FO-ADGCROSS	OPERATOR FAILS TO CROSS-TIE THE ANCILLARY DG BUSES	C	4.59E-03	N
U43-XHE-FO-LPCI	OPERATOR FAILS TO ACTUATE U43 IN LPCI MODE	C	4.43E-03	N
P21-TRN-RE-HX1A	FAILURE TO RESTORE RCCW TRAIN 1A HX	A	2.74E-03	N
P21-TRN-RE-HX2A	FAILURE TO RESTORE RCCW TRAIN 2A HX	A	2.74E-03	N
P21-TRN-RE-HX3A	FAILURE TO RESTORE RCCW TRAIN 3A HX	A	2.74E-03	N
P21-TRN-RE-PUMP1A	FAILURE TO RESTORE RCCW TRAIN 1A PUMP	A	2.74E-03	N
P21-TRN-RE-PUMP2A	FAILURE TO RESTORE RCCW TRAIN 2A PUMP	A	2.74E-03	N
P21-TRN-RE-PUMP3A	FAILURE TO RESTORE RCCW TRAIN 3A PUMP	A	2.74E-03	N
P21-TRN-RE-HX1B	FAILURE TO RESTORE RCCW TRAIN 1B HX	A	2.70E-03	N
P21-TRN-RE-HX2B	FAILURE TO RESTORE RCCW TRAIN 2B HX	A	2.70E-03	N
P21-TRN-RE-HX3B	FAILURE TO RESTORE RCCW TRAIN 3B HX	A	2.70E-03	N
P21-TRN-RE-PUMP1B	FAILURE TO RESTORE RCCW TRAIN 1B PUMP	A	2.70E-03	N
P21-TRN-RE-PUMP2B	FAILURE TO RESTORE RCCW TRAIN 2B PUMP	A	2.70E-03	N
P21-TRN-RE-PUMP3B	FAILURE TO RESTORE RCCW TRAIN 3B PUMP	A	2.70E-03	N
P41-TRN-RE-PUMP1B	FAILURE TO RESTORE PSW PUMP 1B	A	4.95E-04	N
P41-TRN-RE-PUMP2B	FAILURE TO RESTORE PSW PUMP 2B	A	4.95E-04	N
G21-XHE-FO-LPCI	OPERATOR FAILS TO ALIGN AND ACTUATE FAPCS IN LPCI MODE	C	3.83E-04	N
P41-TRN-RE-PUMP1A	FAILURE TO RESTORE PSW PUMP 1A	A	3.83E-04	N
P41-TRN-RE-PUMP2A	FAILURE TO RESTORE PSW PUMP 2A	A	3.83E-04	N
R21-TRN-RE-FODG1A	FAILURE TO RESTORE FUEL OIL TRANSFER TRAIN 1 FOR DG-A	A	1.12E-04	N
R21-TRN-RE-FODG1B	FAILURE TO RESTORE FUEL OIL TRANSFER TRAIN 1 FOR DG-B	A	1.12E-04	N
R21-TRN-RE-FODG2A	FAILURE TO RESTORE FUEL OIL TRANSFER TRAIN 2 FOR DG-A	A	1.11E-04	N

Table 17.7-24

High Winds CDF & LRF Shutdown Operator Actions - FV

BASIC EVENT	DESCRIPTION	HRA TYPE	FV	THRESHOLD
R21-TRN-RE-FODG2B	FAILURE TO RESTORE FUEL OIL TRANSFER TRAIN 2 FOR DG-B	A	1.11E-04	**N**
XXX-XHE-FO-RPVLDE	OP. FAILS TO RECOG. OR CHECK THE RPV DECREASING LEVEL	C	3.40E-05	**N**
E50-XHE-FO-EQU	OPERATOR FAILS TO ACTUATE GDCS	C	3.22E-06	**N**
E50-XHE-FO-GDCS	OPERATOR FAILS TO ACTUATE GDCS	C	3.22E-06	**N**

17.8 REFERENCES

17-1 ASME RA-Sb-2005, "Standard for Probabilistic Risk Assessment for Nuclear Power Plant Applications," Addendum B to ASME RA-S-2002, ASME, New York, New York, December 30, 2005.

17-2 US NRC, Regulatory Guide 1.174, "An Approach For Using Probabilistic Risk Assessment in Risk-Informed Decisions on Plant-Specific Changes to the Licensing Basis," Revision 1, November 2002.

18 PRA INSIGHTS AFFECTING ESBWR DESIGN

Contents

18.1 INTRODUCTION 18.1-1
18.2 PRA ASSUMPTIONS 18.2-1
18.2.1 Understanding the Effects of Uncertainties on the PRA Model 18.2-1
18.2.2 Identifying Key Assumptions 18.2-1
18.3 INSIGHTS ON THE ESBWR DESIGN 18.3-1
18.4 MAINTAINING RISK INSIGHTS AND ASSUMPTIONS 18.4-1

List of Tables

Table 18-1 Risk Insights and Assumptions 18.4-3
Table 18-2 ESBWR Design Features That Reduce Risk 18.4-14
Table 18-3 Comparison of BWR vs. ESBWR PRA Prevention and Mitigation Functions 18.4-16
Table 18-4 Analysis of Insights and Assumption**s (DELETED)** 18.4-20

List of Figures

Figure 18-1. Process for Identification of Key Insights and Assumptions 18.4-19

18 PRA INSIGHTS AFFECTING ESBWR DESIGN

18.1 INTRODUCTION

A comprehensive PRA includes not only the quantified results, but also includes information on how the design features affect the risk profile, and knowledge of the uncertainties, assumptions and limitations of the PRA model in representing an estimate of the risks of the plant. Uncertainty, importance, and sensitivity analyses provide important information about areas where certain design features are the most effective in reducing risk with respect to:

- Operation of reactors;
- Hardware failures and human errors;
- Maintaining the "built-in" plant safety and ensuring that the risk does not increase unacceptably;
- Uncertainty associated with the risk estimates; and
- Sensitivity of risk estimates to uncertainties associated with failure data, assumptions made in the PRA models, lack of modeling details in certain areas, and previously raised issues.

This section describes a systematic approach that is used to define insights and assumptions, identify and evaluate their significance, and to ensure that they are understood and preserved throughout the design phase of the ESBWR.

18.2 PRA ASSUMPTIONS

18.2.1 Understanding the Effects of Uncertainties on the PRA Model

Uncertainty exists in the PRA model where there is no consensus approach or modeling method, and where the choice of approach or modeling method could have an effect on the risk profile such that it influences a risk-based decision made using the PRA. In response to a source of uncertainty, an assumption is created to acknowledge that a best-estimate approach is used, but a different reasonable alternative assumption could produce different results.

During the development phase of the ESBWR, aspects of the design that are not fully complete are treated in the PRA model by using modeling assumptions. As such, it is necessary to identify these assumptions and assure that a process exists to maintain their validity. Different PRA analysts can make different assumptions and still be consistent with the guidelines and standards. The choice of a specific assumption or a particular approximation may, however, influence the results of the PRA. Therefore, it is important to identify significant, or "key," assumptions and determine if the use of alternative methods or numbers could affect the results and insights of the PRA.

Uncertainties can be categorized into distinct groupings for identification and treatment. Parametric uncertainties are associated with the values of the fundamental parameters of the PRA model, such as equipment failure rates, initiating event frequencies, and human error probabilities. Model uncertainties reflect aspects of the PRA model where the state of knowledge is incomplete because detailed design information is not available during the design phase of the ESBWR, or different options are available for modeling phenomena (for example, different methods for estimating human error probabilities or common cause failures.) Completeness uncertainty, which is an aspect of model uncertainty, reflects areas of the analysis that are not fully developed. This type of uncertainty is typically treated by using conservative, bounding estimates, or by qualitative conclusions that the item is not risk significant and is screened out from further consideration. The effects of uncertainties are assessed by performing quantified analyses or qualitative arguments with conclusions that provide reasonable assurance that, 1) the PRA results represent the as-to-be built plant, and 2) key assumptions are preserved throughout the design phase to ensure they are assessed when making design changes.

18.2.2 Identifying Key Assumptions

An assumption is termed "key" if other reasonable alternatives may exist whose results are significant enough to affect the PRA results and conclusions. A systematic method is used to identify the key assumptions of the PRA model. Sections 1 through 16, and 21 of NEDO-33201 are reviewed to identify instances where parametric, modeling and completeness uncertainties require the use of assumptions. This provides a comprehensive accounting for assumptions from each phase of the PRA development, including the severe accident analysis. Assumptions are identified in each step of the PRA development process. This includes initiating events, accident sequences, success criteria, failure probabilities, human error probabilities, and quantification methods. In addition, each system fault tree logic gate is assessed to identify assumptions that are used, to justify items that are included as well as those that are excluded from the fault tree models. After these assumptions are identified, they are evaluated by a qualitative assessment or sensitivity study to determine their relative significance in terms of the NRC Safety Guidelines

for CDF (<1% change of 1E-4), LRF (<1% change of 1E-6), and CCFP (<0.01 increase). The final result is documentation of all assumptions and a list of key assumptions (i.e., risk significant) and their dispositions, which are as follows:

- Design Requirement: an assumption that requires specific design details be preserved to maintain its validity. Design Requirement key assumptions are controlled by the design organization (GEH).
- Operational Program: an assumption that requires specific operational procedures or training be served to maintain its validity. These key assumptions are implemented in the normal operations phase by the licensees.

18.3 INSIGHTS ON THE ESBWR DESIGN

Insights are considered to be observations or results of the PRA process that should be retained to develop an understanding of its capabilities when applying the model to risk-informed applications. There are insights in the various aspects of the PRA development process. As with assumptions, each earlier section of NEDO-33201 has been reviewed to identify key insights. These insights are also included in Table 18-1.

The advantage of developing the PRA model concurrent with the plant design is in identifying potential risk vulnerabilities and implementing design changes that reduce their risk. In this manner, the risk profile evolves with the design, which lowers the overall risk and reduces dominant risk contributions. The ESBWR PRA has been used extensively during the design phase. Table 18-2 lists design features that contribute to the low core damage frequency and balanced risk profile of the ESBWR. For additional perspective, Table 18-3 provides a comparison of ESBWR vs. BWR design features. Review of the proposed design and use of operating experience has led to significant improvements over currently operating BWR designs in the plant's ability to prevent and mitigate severe accidents. The PRA has already been used to identify and quantify various alternatives for improving the reliability of certain design features found in currently operating BWRs. For example, changing the routing of fire suppression piping reduces the probability of internal flooding, which can disable multiple trains of equipment. Following are examples of PRA-based changes that have been incorporated into the ESBWR design, and consequently have contributed to a significant improvement in nuclear safety:

(1) Added redundant, physically separated flow paths to the low pressure injection and suppression pool cooling lines in response to fire analysis.

(2) Determined the loads to be served by the Diverse Protection System, which supplies diverse control signals to safety functions.

(3) Improved the design of digital controls to reduce the likelihood of inadvertent actuation of specified systems.

(4) Added redundant supply valves for Isolation Condenser and Passive Containment Cooling pool makeup.

(5) Added redundant drain line valves for Isolation Condenser System to eliminate a dependency on power supplies.

(6) Changed the routing of fire suppression piping to reduce the likelihood of room flooding.

(7) Determined the appropriate locations of control and instrumentation cabinets and power supplies to ensure physical separation.

(8) Added the Basemat Internal Melt Arrest and coolability device (BiMAC) to reduce the consequences of severe accidents.

18.4 MAINTAINING RISK INSIGHTS AND ASSUMPTIONS

As discussed above, a systematic process is necessary to ensure the continued validity of the model, the following describes the methodology employed.

(1) Review the NEDO-33201 Sections 1 through 16 and 21 to identify assumptions and insights.

   a. Review the section to identify risk insights and assumptions as follows:

      i. Areas where certain design features are the most effective in reducing risk with respect to operating reactor designs;

      ii. Major contributors to risk, such as hardware failures and human errors;

      iii. Major contributors to maintaining the "built-in" plant safety and ensuring that the risk does not increase unacceptably;

      iv. Major contributors to the uncertainty associated with the risk estimates; and

      v. Sensitivity of risk estimates to uncertainties associated with failure data, assumptions made in the PRA models, lack of modeling details in certain areas, and previously raised issues.

   b. Document the identified insights and assumptions.

(2) Review the system fault tree models, identify and document assumptions for each gate.

   a. For model updates, review revisions to fault tree gates to identify new assumptions.

(3) Using the flow chart in Figure 18-1, evaluate key insights and assumptions.

   a. Determine if evaluation is to be qualitative or quantitative;

   b. If qualitative evaluation is sufficient, screen against criteria

   c. If quantitative evaluation required or desired, evaluate against the following criteria:

      i. CDF/LRF importance measures

      ii. Sensitivity study cases

   d. Document results appropriately.

(4) Document insights and assumptions identified in subject NEDO-33201 Sections 1 through 16 and Section 21 as follows:

   a. Summarize all insights and assumptions captured using this process.

   b. Add to or add a new subsection for "Key Insights" in the subject NEDO-33201 section to capture all key insights and assumptions

(5) Review insights and assumptions with respect to CDF, LRF, and CCFP.

   a. Items that are important from a system standpoint, but do not significantly affect CDF, LRF, or CCFP, are retained in system information but are not "key" insights with respect to the DCD application.

b. Summarize results in this NEDO-33201 Section 18, Table 18-1.

(6) Update DCD Tier 2 Chapter 19, Table 19.2-3, with the key insights and assumptions

Table 18-1

Risk Insights and Assumptions

	Insight or Assumption	NEDO-33201 Section	Disposition
1	The containment provides a highly reliable barrier to the release of fission products after a severe accident, with the dominant release category being that defined by nominal allowed leakage. The ESBWR is designed to minimize the effects of pressurization due to direct containment heating (suppression pool – DCD Tier 2, Subsection 6.2.1.1), ex-vessel steam explosions (GDCS pool spillover pipes– DCD Tier 2, Subsection 6.2.1.1.10.2), and core-concrete interaction (BiMAC – DCD Tier 2, Subsection 19.3.2.6). The ESBWR containment is designed to a higher ultimate pressure than previous BWR containment designs.	21.1	Insight
2	The Level 3 results indicate that the offsite consequences due to internal at-power events are negligible. The results, including sensitivity studies, demonstrate that the estimated offsite consequences are less than the defined individual, societal, and radiation dose limits by several orders of magnitude.	10.4	Insight
3	The ESBWR incorporates redundancy and diversity in its design principles, and has used PRA insights during development to identify potential risks and to address them in the design phase. As such, the risks of core damage and offsite radiological consequences are very low. In addition, the risk profile is balanced such that there are no individual component failures or operator errors that contribute a proportionally significant risk. The relative risk significance of individual risk contributions from ESBWR SSCs and operator actions are very low, and are on the same order of magnitude, in some cases, of events that were previously excluded in LWR PRAs.	17.1	Insight
4	The design of the ESBWR reduces the possibility of a LOCA outside the containment by designing to the extent practical all piping systems, major system components (pumps and valves), and subsystems connected to the reactor coolant pressure boundary (RCPB) to an ultimate rupture strength at least equal to the full RCPB pressure.	2.2	Insight

Table 18-1

Risk Insights and Assumptions

	Insight or Assumption	NEDO-33201 Section	Disposition
5	Sensitivity study results indicate that changes in test and maintenance unavailability do not significantly impact the CDF or insights.	11.3	Insight
6	LOCA frequencies. For each pipe group, the number of lines, the number of sections (assessed on the basis of layout drawings), the frequency apportionments, and the final averaged frequencies. These data are binned into the LOCA initiator classes, as summarized in NEDO-33201 Section 2, Table 2.3-2. Sensitivity study results indicate that changes in the LOCA frequencies have the potential to impact CDF, but still maintain significant margin below the NRC safety goal guidelines.	2.2	Operational Program – Site Baseline PRA
7	Sensitivity study results indicate that changes in the human error failure probabilities, particularly pre-initiators, have the potential to impact CDF, but still maintain significant margin below the NRC safety goal guidelines.	11.3	Operational Program – Human Factors Engineering
8	Sensitivity study results indicate that squib valve failure rate estimates have the potential to impact CDF, but still maintain significant margin below the NRC safety goal guidelines.	11.3	Operational Program – Maintenance Rule
9	If automatic isolation fails to isolate an RWCU/SDC line break outside of containment, manual action to isolate the line is modeled in sequences that allow successful low pressure injection.	3.3	Operational Program – Procedure Development
10	If the containment is breached or is vented, GDCS injection fails to be sustained in long-term sequences because condensate make-up to GDCS from PCCS is not available. An external injection source must be available in these sequences to ensure adequate core cooling.	3.3	Operational Program – Procedure Development

Table 18-1

Risk Insights and Assumptions

	Insight or Assumption	NEDO-33201 Section	Disposition
11	The design certification PRA uses conservative assumptions in the treatment of ATWS conditions. The following failures are assumed to lead directly to core damage: • Feedwater runback • ADS Inhibit • Level control using Feedwater or CRD injection • SLC The Site Baseline PRA will be refined to reflect operating procedures that will be developed to address the response to ATWS conditions in more detail.	3.3	Operational Program – Site Baseline PRA
12	Q-DCIS and N-DCIS are designed to high standards for reliability, including very reliable hardware and high quality software. The most dominant failure modes reside in the uncertainty in the treatment of software faults, including common cause software failures that either cause demanded actions to fail, or cause spurious actions.	4.5	Operational Program – Site Baseline PRA
13	GDCS faults are dominated by common cause failures of the check valves or the squib valves in the injection and equalize lines.	4.6	Operational Program – Maintenance Rule
14	CRD injection is assumed to be functional following a containment overpressurization failure due to the separation between the dominant containment failure locations (DCD Tier 2, Appendix 19C) and the location of CRD pumps and lines. This is an important assumption, based on the containment failure analysis, which supports the use of CRD in these sequences.	3.3	Operational Program – Site Baseline PRA

Table 18-1

Risk Insights and Assumptions

	Insight or Assumption	NEDO-33201 Section	Disposition
15	The following operator actions have the highest risk importance: • Fail to recognize the need for IC/PCCS pool makeup • Fail to recognize the need for makeup after depressurization • Fail to close Lower Drywell Hatches after a LOCA during Shutdown. These operator actions are based on conservative modeling methods and none are considered to be dominant contributors to CDF or LRF.	17.1	Operational Program – Human Factors Engineering
16	FAPCS and FPS injection capability provide adequate core cooling for transients given successful DPV or ADS valve operation, even if containment pressure is at the ultimate containment pressure.	3.3	Design Requirement (DCD Tier 2 Subsection 9.1.3.2)
17	The DPS cabinet is assumed to be located in a separate fire area in the control building. A preliminary fire PRA analysis model with DPS cabinet located inside room 3301 shows that the fire risk in fire area F3301 would be the dominant contributor to all fire risks due to the high failure probability of common cause failure of software for the safety–related system, the failure of DPS, and multiple nonsafety-related systems impacted by a fire in room 3301. With a separate fire area for the proposed DPS cabinet in the detailed design, the fire risk can be significantly reduced.	12.10	Design Requirement (DCD Tier 2 Section 1.0, F1.2-4)
18	The exposure of the distributed control and information system (Q-DCIS and N-DCIS) equipment to heat and smoke caused by a fire in a single fire area does not cause spurious actuations that could adversely affect safe shutdown.	12.10	Design Requirement (DCD Tier 2 Subsection 9.5.1.10)

Table 18-1

Risk Insights and Assumptions

	Insight or Assumption	NEDO-33201 Section	Disposition
19	The communication links between the main control room (MCR) and the Q-DCIS and N-DCIS rooms do not include any copper or other wire conductors that could potentially cause fire-induced spurious actuations that could adversely affect safe shutdown.	12.10	Design Requirement (DCD Tier 2 Subsection 9.5.1.12)
20	It is assumed that the doors that connect the Control and Reactor Buildings with the Electrical Building galleries are watertight, for flooding of the galleries up to the ground level elevation.	13.8	Design Requirement (DCD Tier 2 Subsection 3.4.1.4.3)
21	The Drywell Floor Drain Sump channels, which allow leakage on the lower drywell floor to flow into the sump, will prevent any molten debris, which reaches the inlet, from entering the sump.	21.5	Design Requirement (DCD Tier 2 Subsection 6.2.1.1.10.2)
22	Closure of both the equipment hatch and the personnel hatch can be performed from outside the lower drywell/containment.	16.3	Design Requirement (DCD Tier 2 Section 1.0, F1.2-2)
23			
24	The IC/PCCS Pool valves that provide make-up water from the equipment storage pool have DPS controls and are powered from a reliable source of power, which is capable of long-term support.	4.2	Design Requirement (DCD Tier 2 Table 7.8-3 and Subsection 5.4.6.2.2)

Table 18-1

Risk Insights and Assumptions

	Insight or Assumption	NEDO-33201 Section	Disposition
25	Control logic cabinets for each of the containment vacuum breaker isolation valves must be located in separate fire zones.	4.18	Design Requirement (DCD Tier 2 Subsection 6.2.1.1.2)
26	Because of the high consequence of a RWCU/SDC line break outside containment this system is designed with an additional diverse, nonsafety-related valve that is used for line isolation. This valve is controlled by the nonsafety-related DCIS system and closes on the same signals that provide the safety-related isolation.	4.8	Design Requirement (DCD Tier 2 Subsection 5.4.8.1.2)
27	Power operated equipment and valves on lines attached to the RPV that require maintenance have maintenance valves installed such that freeze seals will not be required.	16.3	Design Requirement (DCD Tier 2 Subsection 5.2.3.1.1)
28	Separate common cause failure groups are assumed in the PRA model for safety-related versus nonsafety-related batteries and inverters.	4.15, 4.17	Design Requirement (DCD Tier 2 Subsection 7.1.1)
29	A pneumatic accumulator and check valve are required to support the remote-manual and ADS-activated functions of the valve. The accumulator and check valve ensures that the valve opens via the pneumatic operator following a failure of the pneumatic pressure source.	4.1	Design Requirement (DCD Tier 2 Subsection 5.2.2.2.2)
30	The composition of the layer of sacrificial material on the lower drywell floor that covers the BiMAC piping is designed, for the more likely severe accident sequences, to prevent melt impingement due to corium ablation, and also to prevent noncondensable gas generation in quantities that would lead to exceeding the containment ultimate pressure.	21.5	Design Requirement (DCD Tier 2 Subsection 19.3.2.6)

Table 18-1

Risk Insights and Assumptions

	Insight or Assumption	NEDO-33201 Section	Disposition
31	The ATWS sequences experience core damage at high pressure because ADS is inhibited as part of the core damage mitigation effort. However, it is assumed that Emergency Operating Procedures (EOPs) will instruct the operator to depressurize after core damage has occurred in an attempt to preserve containment. It is shown in NEDO-33201 Appendix 8A that the frequency of ATWS sequences experiencing RPV rupture at high pressure is negligible, so only failures at low pressure were analyzed.	8A	Operational Program – Procedure Development
32	Venting is assumed to occur when the containment pressure reaches 90% of the ultimate containment strength.	3.3	Operational Program – Procedure Development
33	During shutdown conditions, a continuous fire watch is required for the following scenarios with breached fire barriers for maintenance activities: • The breaching of the fire door between fire areas F1152 and F1162 (the reactor building fire areas that house RWCU pumps) and between fire areas F4250 and F4260 (the turbine building fire areas that house the RCCW pumps). • The simultaneous breaching of multiple fire barriers that can open fire areas F3301 and F3302 (the N-DCIS room fire areas) to fire area F3100 (the corridor fire area) at the same time. • The simultaneous breaching of multiple fire barriers that can open fire areas F5350 and F5360 (the PIP electric equipment room fire areas) to fire area F5100 (the corridor fire area) at the same time. Shutdown fire risks related to the fire barriers are evaluated and managed in accordance with the outage risk management program of 10 CFR 50.65(a)(4).	12.10	Operational Program – Maintenance Rule

Table 18-1

Risk Insights and Assumptions

	Insight or Assumption	NEDO-33201 Section	Disposition
34	All LOCAs below TAF during shutdown require closure of lower drywell hatch. The hatch can be opened during shutdown. If a break occurs in the lower drywell and the hatch is not closed, core damage is assumed to occur (once the water level reaches the bottom of the hatch, it is assumed that the door can not be closed and the leak not isolated).	16.3	Operational Program – Procedure Development
35	An important recovery action during shutdown is to recover at least one train after loss of both operating RWCU/SDCS trains. This is the primary method of residual heat removal. In the limiting case of loss of cooling, there are approximately 4 hours before boiling would occur. Therefore, there is ample time to restore RWCU/SDC or its supporting systems, such as Service Water or Reactor Component Cooling Water.	16.3	Operational Program – Procedure Development
36	During Mode 5, while preparing to remove the RPV head, RPV water level is raised to provide additional shielding for the personnel removing the head bolts. In BWRs, level is raised to approximately the level of the flange to maximize shielding. In the ESBWR, with its additional RPV height to accommodate the chimney, water level could be raised to a point below the vessel flange to achieve equivalent shielding protection for the workers. In addition, if water level is raised to below the ICS inlet lines, ICS can still be used to remove decay heat, in the event that shutdown cooling is lost during this time period. The duration of this configuration is estimated to be small, around 12 hours, so the overall risk contribution is small.	16.3	Operational Program – Procedure Development
37	The plant should not be in a Mode 6 Unflooded condition when a hurricane strike occurs. This is because in Mode 6 Unflooded the containment is open, the reactor vessel is open and the water above the core will not keep the core cool for an extended period of time.	14.7	Operational Program – Procedure Development

Table 18-1

Risk Insights and Assumptions

	Insight or Assumption	NEDO-33201 Section	Disposition
38	A dominant risk contributor with respect to shutdown modes is "Mode 6 Unflooded." This is consistent with the baseline shutdown CDF results since the isolation condenser system is not credited in the Mode 6 Unflooded event trees. Therefore, it is necessary to ensure the operability of the systems critical to decay heat removal function during this mode.	16.7	Operational Program – Maintenance Rule
39	It is assumed that the watertight doors are normally closed at power. Opening of the doors would generate an alarm in the Control Room, and procedures direct their immediate closure upon receipt of an alarm.	13.8	Operational Program – Human Factors Engineering (alarm), Procedure Development (response)
40	It is assumed that, during shutdown, manual and automatic depressurization (ADS) of the vessel are available while the vessel head is in place.	16.3	Operational Program - Technical Specification LCO 3.5.3
41	It is assumed that the actuation of the GDCS due to an RPV Level 1 water level signal is available during Mode 5 and Mode 6 Unflooded.	16.3	Operational Program - Technical Specification LCO 3.5.3
42	Procedures have provisions to prohibit coincident removal of the control rod and CRD of the same assembly.	16.3	Operational Program – Procedure Development
43	Contingency procedures provide core and spent fuel cooling mitigative actions during FMCRD replacement with fuel in the vessel.	16.3	Operational Program – Procedure Development

Table 18-1

Risk Insights and Assumptions

	Insight or Assumption	NEDO-33201 Section	Disposition
44	During shutdown conditions, in preparation for refueling, both trains of RWCU/SDC are running while the unit is in either Mode 5 or Mode 6 until the reactor cavity is flooded.	16.3	Operational Program – Procedure Development
45	The outage planning and control program is consistent with NUMARC 91-06.	16.3	Operational Program – Procedure Development
46	The FAPCS vessel injection manual isolation valve is a locked-open valve. While its open position is assured by administrative controls, it is an important valve whose failure to remain open could disable two active low pressure injection functions: FAPCS and FPS through FAPCS.	4.7	Operational Program – Human Factors Engineering
47	The PCCS pool drain line maintenance valves are locked-closed manual valves with position indication in the Main Control Room.	4.19	Operational Program – Human Factors Engineering
48	A fire in the lower drywell that damages all equipment in the area can significantly impact the CDF. These fires have been screened from the Fire PRA analysis. The area is inert during power operations. During shutdown, the screening is based on engineering judgment. The components that lead to the high risk significance are RWCU/SDC equipment and containment isolation valves. The judgment to screen this from analysis is based on the physical separation of the components, the limited number of ignition sources in the area, and the limited combustible material in the area.	12.10	Operational Program – Site Baseline PRA

Table 18-1

Risk Insights and Assumptions

	Insight or Assumption	NEDO-33201 Section	Disposition
49	There are implicit assumptions in the high winds risk assessment that (1) the plant will go to Mode 4 and will not de-inert in Mode 4 when the plant shuts down in anticipation of a hurricane strike, and (2) in anticipation of a hurricane strike, the plant will ensure that equipment credited in the high winds PRA is available.	16	Operational Program – Procedure Development

Table 18-2

ESBWR Design Features That Reduce Risk

Reactor Vessel Increased volume of water in vessel No recirculation pump headers minimizes Large Loss-of-Coolant-Accident potential Smaller diameter piping connected to vessel below core elevation
Isolation Condenser System Redundant and Diverse active components Cooling Pools vs. shell-side heat exchangers In-line condensate reservoirs
Gravity Driven Cooling System Eliminate reliance on pumps and motor-operated valves
Passive Containment Cooling System No active components Independent of AC Power to operate
Standby Liquid Control System Two pressurized tanks of sodium pentaborate No pumps required for injection to vessel
Reactor Water Cleanup/Shutdown Cooling Uses larger heat exchangers for backup decay heat removal Full pressure shutdown cooling capability
Fuel and Auxiliary Pool Cooling System Low Pressure Coolant Injection mode for backup coolant injection Automatic Suppression Pool Cooling mode
Control Rod Drive System Provides high pressure injection to vessel

Table 18-2

ESBWR Design Features That Reduce Risk

ATWS Prevention/Mitigation
Scram Discharge Volume eliminated
Fine Motion Control Rod Drives provide diverse backup
Automatic, safety-related Standby Liquid Control System
Alternate Rod Insertion
Instrumentation and Control
Multiple diverse systems to minimize common cause failures
Severe Accident Mitigation
BiMAC device added to eliminate the uncertainty of ex-vessel debris coolability and core-concrete interaction gas generation
Fire water injection capable of arresting core melt in-vessel (not modeled in PSA)
Inert containment prevents hydrogen combustion
High ultimate rupture strength of containment
Loss of Preferred Power
Plant capable of “island mode” of operation in the event of loss of grid (not modeled in PSA)

Table 18-3

Comparison of BWR vs. ESBWR PRA Prevention and Mitigation Functions

Prevention or Mitigation Function	BWR Features	ESBWR Features	Net Effect of ESBWR Design and Operation Features
Initiating Events - Transients	Turbine Trip, Loss of Offsite Power, Loss of FW	Turbine Trip, Loss of Offsite Power, Loss of FW	Similar
Initiating Events – LOCAs, Line Breaks Outside Cont., ISLOCA, Reactor Vessel Rupture	Small, Medium, Large LOCA, LBOC, ISLOCA, Vessel Rupture	Small, Medium, Large LOCA, LBOC, ISLOCA, Vessel Rupture	ESBWR has significantly less large bore piping outside of vessel due to elimination of Recirculation Pumps. Large LOCA and ISLOCA frequencies are lower. ESBWR high to low pressure interfaces use piping capable of withstanding vessel rupture pressure – reduces Interfacing Systems LOCAs.
Reactivity Control	RPS ARI RPT SLC ATWS RPV Level Control	RPS ARI FW Runback SLC ATWS RPV Level Control	Similar Similar ESBWR FW Runback performs similar function to BWR RPT. BWR SLC requires AC Power, ESBWR SLC is accumulator-driven and does not require AC Power to initiate. Level Control treated similarly. ESBWR ADS Inhibit function is automatic.

Table 18-3

Comparison of BWR vs. ESBWR PRA Prevention and Mitigation Functions

Prevention or Mitigation Function	BWR Features	ESBWR Features	Net Effect of ESBWR Design and Operation Features
High Pressure Mitigation	HPCS/ HPCI RCIC CRD 2-Division Analog Actuation	Isolation Condenser CRD 4-Division Digital Actuation	ESBWR does not have a high pressure coolant injection pump. CRD pump capacity and discharge head are enhanced in ESBWR to provide high pressure injection capability. ESBWR uses Isolation Condenser to mitigate transients and prevent need to depressurize. Isolation Condenser does not require AC or DC power, or operator action to control vessel level by controlling pump flow.
Depressurization	Manual SRVs Automatic ADS SRVs	Manual SRVs Automatic ADS SRVs ADS DPVs	ESBWR uses SRVs and DPVs. DPVs are squib-actuated and do not reclose. ESBWR uses manual depressurization with SRVs to preclude the need for ADS. No re-pressurization with DPVs
Low Pressure Mitigation	LPCS LPCI Fire Water Injection	GDCS Injection GDCS Equalize FAPCS LPCI Fire Water Injection	Both GDCS subsystems are independent of AC or DC power. FAPCS LPCI function provides injection with in-line heat exchanger.

Table 18-3

Comparison of BWR vs. ESBWR PRA Prevention and Mitigation Functions

Prevention or Mitigation Function	BWR Features	ESBWR Features	Net Effect of ESBWR Design and Operation Features
Containment Heat Removal	RHR Heat Exchangers Venting	PCCS FAPCS Supp. Pool Cooling RWCU SDC Venting	PCCS is independent of AC or DC power. RWCU SDC provides high pressure cooling.
Supporting Functions	AC Distribution Diesel Generators DC Distribution Component Cooling Room Cooling	AC Distribution Diesel Generators DC Distribution Component Cooling Room Cooling	ESBWR Passive Safety-Related Systems require no Supporting Functions for 72 hours. ESBWR DC System uses 72 hour capacity batteries for safety-related functions. BWR vs. ESBWR component and room cooling are similar.
Instrumentation and Control Systems	Analog single-failure proof. Digital in limited use (FW level controller in some plants.)	Digital Controls. Diverse Protection System.	Digital Controls with triple-redundancy. Diverse Control for key functions to eliminate the effects on common-cause failures, e.g., software.
Severe Accident Mitigation	Severe Accident Guidelines	Severe Accident Guidelines BiMAC	BiMAC reduces the containment failure probability from core-concrete interaction.

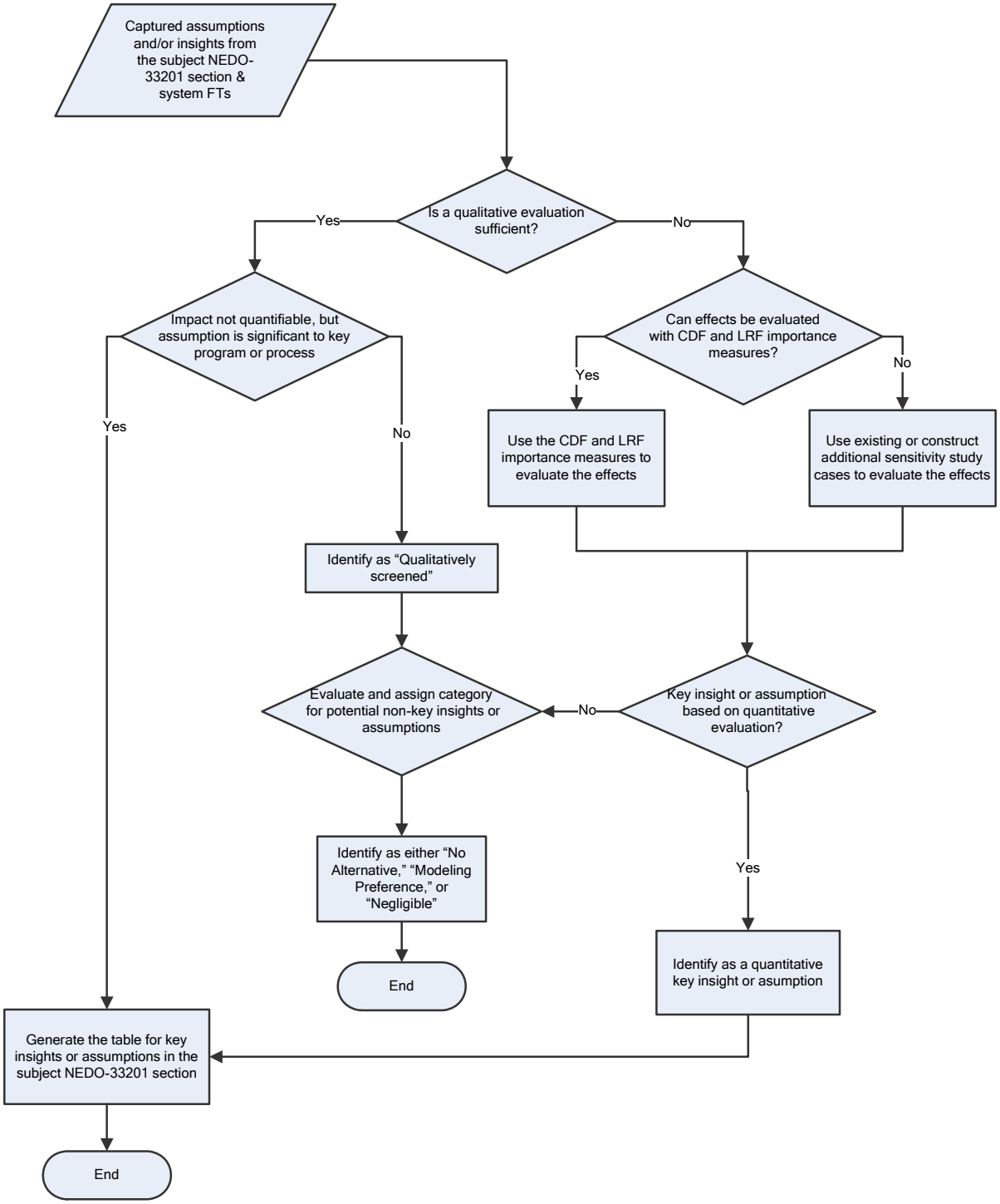

Figure 18-1. Process for Identification of Key Insights and Assumptions

Table 18-4

Analysis of Insights and Assumptions (DELETED)

19 RELIABILITY AND MAINTAINABILITY

Contents

19.1 RELIABILITY ASSURANCE 19.1-1
19.1.1 Purpose 19.1-1

List of Tables

Table 19-1 Reliability and Maintainability of Important Components 19.1-2

19 RELIABILITY AND MAINTAINABILITY

19.1 RELIABILITY ASSURANCE

19.1.1 Purpose

The objective of the Reliability Assurance Program is to ensure assumptions made in the Probabilistic Risk Assessment during the design phase, regarding component reliability and availability, are maintained valid throughout the life of the plant. The program is discussed in DCD Tier 2 Section 17.4.

In accordance with the objective of the program, Table 19-1 provides an example of the scope and frequency of on-going testing and maintenance activities expected to be performed on RTNSS equipment to achieve the objective discussed above. Specifics cannot be known until manufacturer and model information becomes available; therefore, this is provided for information only.

ACSR references in the Basis column of Table 19-1 refer to the Availability Controls Manual (ACM) Surveillance Requirements (SR) detailed in DCD Tier 2 Section 19ACM. Again, it is important to note that the specifications of these systems are provided for information only, and Table 19-1 is not intended to be updated in the design certification period.

Table 19-1

Reliability and Maintainability of Important Components

System	Function	System/Train/ Component	Failure Mode(s)	Recommended Maintenance	PRA Unavailability/ Failure Rate	Test or Maintenance Interval	Basis
ARI	Automatically depressurize scram header on ATWS signal.	C12-F038, F039, F042, F043A/B, F044A/B These represent the actuated devices only; refer to the DPS System to address the actuating device(s).	Fail to Energize	Verify each dump valve vents on receipt of actuation signal Replace	C12-SOV-FE- F038, F039, F042, F043A/B, F044A/B (1E-03)	24 months on a staggered test basis 20 Years	ACSR 3.3.1.2 Normally deenergized solenoids physically mounted in mild environment are not subjected to the failure mechanisms normally considered to lead to the identified failure mode; however, it is unreasonable to assume that they will provide reliable performance for the life of the plant. Therefore, preemptive replacement at the specified interval is considered prudent.
BiMAC	Provide core debris cooling in LDW through deluge valves.	BiMac structure E50-F009A/B/C/D/E/F/G/H/J/K/L/M	Fail to remain intact Fail to open	Inspect structure Verify Continuity of Explosive Charges Verify valves actuate Verify flow	Point Estimate (1E-02) E50-SQV-FA1/2/3, FB1/2/3, FC1/2/3, FD1/2/3 (3E-03)	24 months 31 days 24 months 10 years	Inspect each time available seems prudent ACSR 3.5.1.1 ACSR 3.5.1.2 ACSR 3.5.1.4

Table 19-1

Reliability and Maintainability of Important Components

System	Function	System/Train/ Component	Failure Mode(s)	Recommended Maintenance	PRA Unavailability/ Failure Rate	Test or Maintenance Interval	Basis
				through each flow path from pool to LDW Replace pyrotechnic charge Perform Logic Functional Test	 Channel A and B PLCs	 24 months 24 months on a staggered test basis	 The pyrotechnic charge is susceptible to age and environmental degradation and the only maintenance possible is replacement; the frequency of replacement is based on industry experience. ACSR 3.5.1.3
CB HVAC	Provide post 72-hour cooling for DCIS and Control Room habitability.	CB HVAC The design is intended to be direct drive variable speed fans requiring no modulating or controlling dampers; therefore, only the fan/motor unit is included in this analysis.	Fail to Run Fail to Start	Thermography Vibration Monitoring Oil Analysis Electrical Tests Clean and Inspect	FAN FR (1E-05) FAN FS (6E-04)	6 months 6 months 6 months 4 years 2 years	Industry Experience Industry Experience Industry Experience Industry Experience Industry Experience

Table 19-1

Reliability and Maintainability of Important Components

System	Function	System/Train/ Component	Failure Mode(s)	Recommended Maintenance	PRA Unavailability/ Failure Rate	Test or Maintenance Interval	Basis
Chilled Water System	Provide post 72-hour cooling for HVAC. Provide cooling support for FAPCS.	Chiller units	Fail to run Fail to start	Refrigerant Analysis Glycol Analysis Oil Analysis Vibration Analysis External Visual Inspection Internal Inspection Overhaul System Performance Test System Functional Test	CHU FR (1E-05) CHU FS (6E-03)	12 months 6 months 6 months 6 months 3 months 24 months as needed 24 months 24 months	Industry experience has shown that general cleanliness of external/accessible parts and appropriate action based on analysis and test results will provide a reliable unit.
Control Room Area Ventilation	Portable Generator for post 72-hour battery charging	CR HVAC The design is intended to be direct drive variable speed fans requiring no modulating or controlling dampers; therefore, only the fan/motor unit is included in this analysis.	Fail to Run Fail to Start	Thermography Vibration Monitoring Oil Analysis Electrical Tests Clean and Inspect	FAN FR (1E-05) FAN FS (6E-04)	6 months 6 months 6 months 4 years 2 years	Industry Experience Industry Experience Industry Experience Industry Experience Industry Experience
Diesel Fire Pump	Provide post 72-hour refill	U43-P1A/P2A	Fail to Start Fail to Run	Fire Pump Monthly Test	U43-EDP-FS-G1 (2.2E-02)	1 month	Primarily required by NEIL, specific tests and frequency

Table 19-1

Reliability and Maintainability of Important Components

System	Function	System/Train/ Component	Failure Mode(s)	Recommended Maintenance	PRA Unavailability/ Failure Rate	Test or Maintenance Interval	Basis
	to ICS/PCCS and Spent Fuel pools.			Fire Pump Battery Monthly Test Verify flow path* Start and Operate Manually* Fire Pump Battery 18 Mo. Test Fire Pump Flow Test Fire Pump Engine Inspection Fire Service Water Flow Test	U43-EDP-FR-G1 (2.5E-02)	1 month 31 days* 92 days* 18 months 18 months 2 years 3 years	will be dictated by the plant specific Fire Program to meet NEIL as well as federal and state fire code requirements. *ACSR 3.7.1.2 and ACSR 3.7.1.3 respectively.
AC Power PIP Buses	Provide power for post accident monitoring Provide power for FAPCS and support systems. (Non-seismic PRA sequences.)	480V Motor Control Center R12-FB-A R12-FB-B 6.9KV Switchgear R11-1000A3 R11-1000B3	Fail to provide power Fail to provide power	Thermographic scan (buckets and housing) Clean and Inspect (buckets and housing) Test circuit breakers Thermography Breaker – Detailed Inspection Breaker – Overhaul Cubicle – Detailed	R12-FB-A-0000 (1.05E-03) R12-FB-B-0000 (1.05E-03) R11-1000B3 (1.73E-05) R11-1000A3 (1.73E-05)	1 year 5 years 10 years 1 year 6 years 12 years 6 years	Industry Experience Industry Experience Industry Experience Industry Experience Industry Experience Industry Experience Industry Experience

Table 19-1

Reliability and Maintainability of Important Components

System	Function	System/Train/ Component	Failure Mode(s)	Recommended Maintenance	PRA Unavailability/ Failure Rate	Test or Maintenance Interval	Basis
				Inspection Cubicle – Overhaul		12 years	Industry Experience
Diesel Generators	Provide power for post accident monitoring Provide power for FAPCS and support systems. (Non-seismic PRA sequences.)	DG A Jacket Cooling AOV P21-F023A Room Cooling Normal Room Venting Supplemental Venting DG Electronic Equipment Room Cooling Nuclear Island Chill Water Bus A2-01A	Failure to Start and Run Failure to Cool Failure to Close System Failure to Cool Failure to Start and Run Failure to Start and Run Failure to Start and Run See Chilled Water System See AC Power PIP Buses	Start and Operate Clean and Inspect Inspect and Replace Elastomers See following items Clean, Inspect, and Lubricate Clean, Inspect, and Lubricate Clean, Inspect, and Lubricate See Chilled Water System See AC Power PIP Buses	R21-DGA (1.53E-01) R21-DGA-0080 (3.22E-03) P21-ACV-OO-F023A (2E-03) R21-DGA-0050 (2.98E-02) R21-NORMVENTA (2.53E-04) R21-SUPPVENTA (2.08E-02) R21-COOLINGA (7.9E-03) NICWSA-SYS-FAILS (Transfer) R12-A2-01A-LL (Transfer) R21-DGA-0060 (4.9E-03)	92 days 24 Months 12 Years See below 24 Months 24 Months 24 Months See Chilled Water System See AC Power PIP Buses	ACSR 3.8.1.2/3.8.2.2 Industry Experience Industry Experience See below Industry Experience Industry Experience Industry Experience See Chilled Water System See AC Power PIP Buses

Table 19-1

Reliability and Maintainability of Important Components

System	Function	System/Train/ Component	Failure Mode(s)	Recommended Maintenance	PRA Unavailability/ Failure Rate	Test or Maintenance Interval	Basis
		Fuel Oil Storage & Transfer Day Tank	System Failure Failure to Supply Fuel	See following items Verify volume	R21-DAYTANKA (2.7E-05) R21-FLT-PG-DGA (3.6E-03)	See below 31 days	See below ACSR 3.8.1.1/3.8.2.1
				Inspect Tank	R21-DGA-0060 (4.9E-03)	18 Months	NEIL
		Filter	Plugged	Replace		As required, based on differential pressure	Industry Experience
		Fuel Oil Transfer Tank	System Failure Rupture	Inspect	R21-TNK-RP-1A (2.4E-06)	10 Years	NEIL
		Train (typical of two available)	Sub-system failure	See following items	R21-TRANSFER1A (1.05E-02)	See below	See below
		Check Valve	Fails to open/remain open	Disassemble and Inspect	R21-UV_-CC-FO-G1 (1.11E-04) R21-UV_-OC-F3A (7.2E-05)	10 Years	SOER 86-03
		Pump	Fails to Start and Run	Perform vibration monitoring	R21-MP_-FS-FOPUMP-G1 (2.22E-03) R21-MP_-FR-FOPUMP-G1 (6.3E-04)	1 Quarter	Industry Experience
		Manual valves	Plugs/transfers closed	None	R21-BV_-OC-F1A (1.08E-05) R21-BV_-OC-F5A (1.08E-05)		Low probability occurrence
		DG B	Same as DG A	Same as DG A	Same as DG A	Same as DG A	Same as DG A

Table 19-1

Reliability and Maintainability of Important Components

System	Function	System/Train/ Component	Failure Mode(s)	Recommended Maintenance	PRA Unavailability/ Failure Rate	Test or Maintenance Interval	Basis
DPS	Diverse actuation of ECCS functions: SLCS Actuation	Two of four low level or pressure sensor combined with the ATWS SRNM permissive and two of four ATWS Logic Processors (SSLC) actuate load drivers. The two load drivers are in series and both must be actuated to allow current to the squib valve actuators.	Failure to provide appropriate actuation signal(s)	Perform Logic System Functional Test	C72-C41-F003A-DPS C72-C41-F003B-DPS C72-C41-F003C-DPS C72-C41-F003D-DPS (Each failure rate 5.3E-04)	24 months on a staggered test basis	ACSR 3.3.2.2
				Perform Logic System Functional Test	C72-C71-ARI (1.88E-04)	24 months on a staggered test basis	ACSR 3.3.1.3
	ARI Actuation	One of three ARI air header vent path exhaust to atmosphere.	Failure to provide appropriate actuation signal(s)	Perform Logic System Functional Test	C72-FWRUNBACK (6.45E-04)	24 months on a staggered test basis	ACSR 3.3.3.2

Table 19-1

Reliability and Maintainability of Important Components

System	Function	System/Train/ Component	Failure Mode(s)	Recommended Maintenance	PRA Unavailability/ Failure Rate	Test or Maintenance Interval	Basis
	FW Runback Actuation	Two of four high RPV sensors and SRNM flux (>6%) divisional signal and two of four ATWS logic processors combined with two of three DPS processors actuate load drivers for feedwater control system.	Failure to provide appropriate actuation signal(s)				
EB HVAC	Provide post 72-hour cooling for DGs and 1E Electrical Distribution. Provide support for electrical power to FAPCS.	EB HVAC The design is intended to be direct drive variable speed fans requiring no modulating or controlling dampers; therefore, only the fan/motor unit is included in this	Fail to Run Fail to Start	Thermography Vibration Monitoring Oil Analysis Electrical Tests Clean and Inspect	FAN FR (1E-05) FAN FS (6E-04)	6 months 6 months 6 months 4 years 2 years	Industry Experience Industry Experience Industry Experience Industry Experience Industry Experience

Table 19-1

Reliability and Maintainability of Important Components

System	Function	System/Train/ Component	Failure Mode(s)	Recommended Maintenance	PRA Unavailability/ Failure Rate	Test or Maintenance Interval	Basis
		analysis.					
External Connection	Provide post 7-day refill to ICS/PCCS and Spent Fuel pools.	U43-MKUP	Insufficient volume Fails catastrophically	Verify volume Perform structural inspection	 TNK RP (1E-07)	31 days 4 years	ACSR 3.7.1.1 Any structural degradation would be expected to be slow; an overall structure inspection program to meet 10CFR65 (a)(3) reporting requirements should dictate performance interval. This is a conservative frequency.
FAPCS	Suppression pool cooling and low pressure coolant injection modes. (Non-seismic PRA sequences.)	G21-C001A/B	Fail to Run Fail to Start	Thermography Vibration Monitoring Oil Analysis Electrical Tests Clean and Inspect Verify Flowpath	WS-TOPSPC (1.6E-02) VL-TOPINJ (9.7E-02)	6 months 6 months 6 months 4 years 2 years 31 days	Industry Experience Industry Experience Industry Experience Industry Experience Industry Experience ACSRs 3.7.2.1 and 3.7.3.1
FB HVAC	Provide cooling support for FAPCS.	FB HVAC The design is intended to be direct drive variable speed fans requiring no modulating or controlling	Fail to Run Fail to Start	Thermography Vibration Monitoring Oil Analysis Electrical Tests Clean and Inspect	FAN FR (1E-05) FAN FS (6E-04)	6 months 6 months 6 months 4 years 2 years	Industry Experience Industry Experience Industry Experience Industry Experience Industry Experience

Table 19-1

Reliability and Maintainability of Important Components

System	Function	System/Train/ Component	Failure Mode(s)	Recommended Maintenance	PRA Unavailability/ Failure Rate	Test or Maintenance Interval	Basis
		dampers; therefore, only the fan/motor unit is included in this analysis.					
Feedwater Runback	Run FW demand to minimum on ATWS signal.	N21-F060 (LFCV)	Fail to open (AOV)	Clean and Inspect Inspect and Replace Elastomers	ACV CC (2E-03)	24 Months 12 Years	Industry Experience Industry Experience
		G31-F025A/B, F028 (RWCU/SDC Overboard Flow)	Fail to open (MOV)	Inspect and lubricate (Mechanical Grooming) Inspect and Lubricate (Electrical Inspection)	MOV CC (4E-03)	4 years 8 years	Industry Experience Industry Experience
		These represent the actuated devices only; refer to the DPS System to address the actuating	Fail to Actuate	Perform FWRB function actuation	NLU FC (5E-06) None of these are modeled; therefore, the generic failure rate for the	24 months	ACSR 3.3.3.1

Table 19-1

Reliability and Maintainability of Important Components

System	Function	System/Train/ Component	Failure Mode(s)	Recommended Maintenance	PRA Unavailability/ Failure Rate	Test or Maintenance Interval	Basis
		device(s).			component type and failure mode is specified.		
PAM Instruments (DCIS)	Provide post accident monitoring (use RG 1.97 to determine scope.)	PAM Instrument Channels (Reference FSAR Subsection 7.5.1)	Fail to provide accurate signal	Perform Channel Check Perform Channel Calibration	Post Accident Monitoring Instrument Channels are not modeled.	31 days 24 months	ACSR 3.3.4.1 ACSR 3.3.4.2
PSW	Provide post 72-hour cooling for RCCWS. Provide cooling support for FAPCS.	P41-C001A/B P41-C002A/B P41-FAN-001A/B, 2A/B RCCW/TCCW Heat Exchangers	Fail to Run Fail to Start Fail to Run Fail to Start Fails to function Leaks Plugged	Thermography Vibration Monitoring Oil Analysis Electrical Tests Clean and Inspect Thermography Vibration Monitoring Clean and Inspect Performance Monitoring NDE Inspection Internal Inspection Clean	P41-0001-_1 (1.22E-03) P41-FAN-FR-000 (2.4E-04) P41-FAN-FS-000 (6.0E-04) HX_ FC 1.00E-06 HX_ LK 1.00E-06 HX_ PG 1.00E-06	6 months 6 months 6 months 4 years 2 years 3 months 3 months 2 years 1 month to 2 years 4 to 6 years, if req'd 2-4 years, if req'd 2 years, only in	Industry Experience Industry Experience Industry Experience Industry Experience Industry Experience Industry Experience Industry Experience Industry Experience Variable times specified based on quality of PSW; the lower the water quality, the more frequent the specified activities are required.

Table 19-1

Reliability and Maintainability of Important Components

System	Function	System/Train/ Component	Failure Mode(s)	Recommended Maintenance	PRA Unavailability/ Failure Rate	Test or Maintenance Interval	Basis
				Leak Test		harshest circumstances 2 to 4 years in harshest circumstances	
RB HVAC	Provide post 72-hour cooling for DCIS.	RB HVAC The design is intended to be direct drive variable speed fans requiring no modulating or controlling dampers; therefore, only the fan/motor unit is included in this analysis.	Fail to Run Fail to Start	Thermography Vibration Monitoring Oil Analysis Electrical Tests Clean and Inspect	FAN FR (1E-05) FAN FS (6E-04)	6 months 6 months 6 months 4 years 2 years	Industry Experience Industry Experience Industry Experience Industry Experience Industry Experience
RCCWS	Provide post 72-hour cooling for Chillers and DGs. Provide cooling support for FAPCS.	P21-P-0001A1/2/3 P21-P-0001B1/2/3	Fail to Run Fail to Start	Thermography Vibration Monitoring Oil Analysis Electrical Tests Clean and Inspect	P21-0001-_1A (4.3E-03) P21-0001-_1B (4.3E-03)	6 months 6 months 6 months 4 years 2 years	Industry Experience Industry Experience Industry Experience Industry Experience Industry Experience
SLCS Actuation	Backup actuation logic to	C41-F003A/B/C/D	Fail to Operate	Verify SLC actuation on actuation signal	C41-SQV-CC-F003A C41-SQV-CC-F003B		

Table 19-1

Reliability and Maintainability of Important Components

System	Function	System/Train/ Component	Failure Mode(s)	Recommended Maintenance	PRA Unavailability/ Failure Rate	Test or Maintenance Interval	Basis
	initiate SLCS and isolate RWCU/SDC.	These represent the actuated devices only; refer to the DPS System to address the actuating device(s).		Replace pyrotechnic charge	C41-SQV-CC-F003C C41-SQV-CC-F003D (Each is 3E-03)	24 months 24 months	ACSR 3.3.2.1 The pyrotechnic charge is susceptible to age and environmental degradation and the only maintenance possible is replacement; the frequency of replacement is based on industry experience.
TB HVAC	Provide post 72-hour cooling for DCIS in Turbine Building. Provide room cooling for RCCW pumps.	TB HVAC The design is intended to be direct drive variable speed fans requiring no modulating or controlling dampers; therefore, only the fan/motor unit is included in this analysis.	Fail to Run Fail to Start	Thermography Vibration Monitoring Oil Analysis Electrical Tests Clean and Inspect	FAN FR (1E-05) FAN FS (6E-04)	6 months 6 months 6 months 4 years 2 years	Industry Experience Industry Experience Industry Experience Industry Experience Industry Experience

20 REGULATORY TREATMENT OF NON-SAFETY SYSTEMS

Contents

20.1 INTRODUCTION 20.1-1
20.2 PROBABILISTIC ASSESSMENT OF RTNSS – CRITERION C 20.2-1
20.2.1 Focused PRA Sensitivity Study 20.2-1
20.2.2 Assessment of Uncertainties 20.2-2
20.2.3 PRA Initiating Events Assessment 20.2-3
20.2.3.1 At-Power Generic Transients 20.2-3
20.2.3.2 At-Power Inadvertent Opening of a Relief Valve 20.2-3
20.2.3.3 At-Power Transient with Loss of Feedwater 20.2-3
20.2.3.4 At-Power Loss of Preferred Power 20.2-4
20.2.3.5 At-Power LOCA 20.2-4
20.2.3.6 Shutdown Loss of Preferred Power 20.2-4
20.2.3.7 Loss of Shutdown Cooling 20.2-4
20.2.3.8 Shutdown LOCA 20.2-5
20.2.4 Summary of RTNSS Candidates from Criterion C 20.2-5
20.3 SELECTION OF IMPORTANT NON-SAFETY SYSTEMS 20.3-1
20.4 PROPOSED REGULATORY OVERSIGHT 20.4-1
20.4.1 Regulatory Oversight 20.4-1
20.5 ADDITIONAL INFORMATION 20.5-1
20.5.1 RTNSS Functions, Fault Tree Logic, and Components 20.5-1

List of Tables

Table 20.2-1 PRA Focus Results (DELETED) 20.2-6
Table 20.3-1 RTNSS Systems (DELETED) 20.3-2
Table 20.5-1 Example RTNSS Functions, Fault Tree Logic, and Components 20.5-2

List of Figures

Figure 20.4-1 RTNSS Functional Relationships Supporting Post Accident Monitoring and Containment Integrity 20.4-2
Figure 20.4-2 RTNSS Functional Relationships Supporting Post 72 hour Cooling & Control Room Habitability 20.4-3
Figure 20.4-3 RTNSS Functional Relationships Supporting Backup Cooling Functions 20.4-4

20 REGULATORY TREATMENT OF NON-SAFETY SYSTEMS

20.1 INTRODUCTION

The ESBWR plant design uses passive safety systems to supply safety injection water and provide core and containment cooling. As the ESBWR relies on passive safety systems to perform the design-basis, safety-related functions of reactor inventory control and decay heat removal, different portions of active and passive systems also provide certain defense-in-depth backup to the primary passive features. For example, the Fuel and Auxiliary Pools Cooling System (FAPCS) Low Pressure Coolant Injection mode provides a nonsafety-related backup to the Gravity Driven Cooling System (GDCS). All active systems requiring AC power to operate are designated as non-safety related.

The ALWR Utility Requirements Document (URD) for passive plants, issued by the Electric Power Research Institute, recommends that the plant designer specifically define the active systems relied upon for defense-in-depth. Passive systems are able to perform their safety functions for 72 hours after an initiating event. After 72 hours, non-safety or active systems may be required to replenish the passive systems or to perform core and containment heat removal duties directly. The ESBWR includes active systems that provide defense-in-depth capabilities for reactor coolant system makeup and decay heat removal. These active systems provide backup capability and reduce challenges to the passive systems in the event of transients or plant upsets. In general, these systems are designated as non-safety related.

SECY-94-084, "Policy and Technical Issues Associated with the Regulatory Treatment of Non-Safety Systems in Passive Plant Designs," outlines a process that includes the use of both probabilistic and deterministic criteria to achieve the following objectives:

- Determine whether regulatory oversight for certain non-safety related systems is needed;
- Identify risk important SSCs for regulatory oversight (if it is determined that regulatory oversight is needed);
- Decide on an appropriate level of regulatory oversight for the various identified SSCs commensurate with their risk importance.

The SECY-94-084 criteria are applied to the ESBWR design to determine the systems that are candidates for RTNSS consideration in DCD Tier 2, Chapter 19A.

The purpose of Section 20 is to provide additional details, only in certain subsections, to support the information on RTNSS that is provided in DCD Tier 2, Appendix 19A. Section 20 is not intended to duplicate Appendix 19A material.

20.2 PROBABILISTIC ASSESSMENT OF RTNSS – CRITERION C

RTNSS Criterion C requires an assessment of safety functions relied upon at-power and during shutdown conditions to meet NRC safety goal guidelines. A comprehensive assessment to identify RTNSS candidates includes focused PRA sensitivity studies for internal and external events during at-power or shutdown operating modes, an assessment of the effects of nonsafety-related systems on initiating event frequencies, and an assessment of uncertainties in these analyses and uncertainties that may be introduced by passive components.

20.2.1 Focused PRA Sensitivity Study

A focused PRA sensitivity study evaluates whether passive systems alone are adequate to meet the NRC safety goals of CDF less than 1.0 E-4 per year and LRF less than 1.0 E-6 per year. The focused PRA retains the same initiating event frequencies as the baseline PRA, and sets the status of nonsafety-related systems to failed, while safety-related systems remain unchanged in the model. Additional nonsafety-related systems are included if CDF or LRF values are above the goals. The additional nonsafety-related systems required to meet the CDF and LRF goals are candidates for RTNSS.

The intent of the focused analyses is to determine the impact to core damage frequency (CDF) and large release frequency (LRF) that is caused by removing credit for non-safety systems. The results are compared to the following NRC criteria to determine whether systems should be considered for Regulatory Treatment of Non-Safety Systems (RTNSS):

- CDF < 1.0E-04/yr
- LRF < 1.0E-06/yr

Focused PRA analyses were performed for all the following PRA models:

(1) Core Damage Frequency

a) Baseline

b) Fire

c) Flood

d) High Winds

(2) Large Release Frequency

a) Baseline

b) Fire

c) Flood

d) High Winds

(3) Shutdown Core Damage Frequency

a) Baseline

b) Fire

c) Flood

d) High Winds

The shutdown analyses do not require evaluation of LRF because the containment is assumed to be open. For the remaining analyses LRF is represented by releases other than allowed containment leakage, designated as variable "nTSL."

The following systems are assumed to be unavailable for the focused analyses: Standby Diesel Generators (R21), Condenser (N37), Condensate and Feedwater, (N21), CRD Injection & FMCRD (C12), FAPCS (G21), RWCU/SDC (G31), FPS Injection (U43), DPS (C72), MSIV (B21), RCCW (P21), TCCW (P22), Plant Air (P51), Nitrogen (P54), Plant Service Water (P41), Chilled Water (P25), Reactor Building HVAC (U40), Containment Venting (T10), AC Electrical Power (R10), FMCRD groups' power (R12), PIP buses A3 and B3 (R11), and DC Power (R16). A flag file is used to effectively fail these systems, by setting key representative components to TRUE.

The focus results are provided in Section 11.

20.2.2 Assessment of Uncertainties

The ESBWR PRA addresses passive system thermal-hydraulic uncertainty issues in a systematic process that identifies potential uncertainties in passive components or thermal-hydraulic phenomena and then applies an appropriate treatment to the component to ensure that the uncertainties are treated conservatively.

Passive system thermal-hydraulic uncertainties manifest themselves in the PRA model within failure probabilities and success criteria. Passive components that must rely on natural forces, such as gravity, have lower driving forces than conventional pumped systems so additional margin is incorporated into the design. Some passive functions are based on new engineering design, with limited operating experience to establish confidence in the failure rate estimates. The PRA models the effectiveness of passive safety functions in the failure rate estimated and success criteria that are factored into the event trees. Therefore, assessing the event tree success criteria in the PRA model identifies thermal-hydraulic uncertainties.

There are also uncertainties associated with the manual alignment and operation of long-term decay heat removal systems identified under RTNSS Criterion B. These uncertainties can influence the results such that there is a challenge to the CDF and LRF goals in transient sequences. This is not an issue for low frequency scenarios, such as large LOCA or seismic events.

In order to address these uncertainties, the FAPCS system is added as a RTNSS candidate. This system has the capability to provide a core injection function and to provide a decay heat removal function. The support systems needed to use this system are RCCWS, Standby Diesel Generators, PIP buses, Electrical Building HVAC, Fuel Building HVAC, Nuclear Island Chilled Water System, and PSWS. These are all considered to be covered by RTNSS for Criterion C.

The function of FAPCS is provided as a two train system. The trains are physically and electrically separated such that no single active component failure can fail the function. This provides the CDF and LRF reduction needed to address the PRA uncertainty concerns.

20.2.3 PRA Initiating Events Assessment

The At-Power and Shutdown PRA models are reviewed to determine whether non-safety SSCs could have a significant effect on the estimated frequency of initiating events. The following screening criteria are imposed on the at-power and shutdown initiating events:

(1) Are nonsafety-related SSCs considered in the calculation of the initiating event frequency?

(2) Does the unavailability of the nonsafety-related SSCs significantly affect the calculation of the initiating event frequency?

(3) Does the initiating event significantly affect CDF or LRF for the baseline PRA?

If the answer to all three of these questions is "Yes", then the non-safety SSC is a RTNSS candidate. The results are discussed below.

20.2.3.1 At-Power Generic Transients

Initiating events that are considered Generic Transients are described in DCD Tier 2, Subsection 19.2.3.1. Because several initiating events in this group are caused by the failures of nonsafety-related SSCs, screening questions 1, 2, and 3 are answered "Yes." However, this category of transient initiating events includes various failures of components or operator errors. No specific nonsafety-related systems have a significant effect on risk, and there are no RTNSS candidates from this category.

20.2.3.2 At-Power Inadvertent Opening of a Relief Valve

Safety/Relief Valves are safety-related. Therefore, they are not RTNSS candidates.

20.2.3.3 At-Power Transient with Loss of Feedwater

The initiating events in this group begin with a prompt and total loss of feedwater and require the success of other mitigating systems for reactor vessel level control. The SSCs related to feedwater and condensate are nonsafety-related, and thus Questions 1, 2, and 3 are answered "Yes." The loss of feedwater is a significant contributor to CDF, so the feedwater and condensate systems are RTNSS candidates. However, several features in the advanced design of the new generation feedwater level control system add significant reliability and, thus, a lower failure probability for loss of feedwater initiating events. The feedwater level control system is implemented on a triplicate, fault-tolerant digital controller. Therefore, a control failure is much less likely to occur in the ESBWR than in the design of current generation of reactors.

The dominant contributors to a total loss of feedwater are a loss of control power to the feedwater controllers and loss of AC power to the pumps. Only a total and immediate loss of all feedwater flow is included in the Loss of Feedwater initiating event category. A controller failure that results in reduced feedwater flow is much less significant than a complete loss of feedwater.

Therefore, due to the conservative treatment of the condensate and feedwater systems in the PRA, their risk significance does not warrant additional regulatory oversight.

20.2.3.4 At-Power Loss of Preferred Power

Loss of Preferred Power (LOPP) occurs as a result of severe weather, grid disturbances, plant-centered failures, or switchyard faults. Loss of preferred power is assumed to cause a plant trip and a loss of feedwater, with longer-term effects on other mitigating systems requiring AC power. The associated systems that comprise the onsite AC power distribution system are nonsafety-related, and thus, Questions 1 and 2 are answered "Yes." Plant-centered components such as substations, breakers, motor control centers, and protective relays are much less risk-significant and below the threshold for RTNSS consideration (less than1% contribution to CDF) so Question 3 is answered "No." The cumulative effects of Loss of preferred power are a significant contributor to CDF and LRF for at-power and shutdown risk. However, the dominant risk contributions are from the loss of incoming AC power from the utility grid and weather related faults. These types of faults are caused by components that are not controlled by the site organization. Therefore, the SSCs within the ESBWR design scope for preventing a loss of offsite power initiating event are not risk significant and do not warrant additional regulatory oversight.

Note that the onsite power generation does have RTNSS controls due to other criteria.

20.2.3.5 At-Power LOCA

Loss of coolant accidents are initiated by piping leaks, valve leaks, or breaks. LOCAs are postulated to initiate in systems, such as RWCU/SDC and Main Steam. However, general design considerations require that all piping and components within the reactor coolant pressure boundary be safety-related. The RWCU/SDC and Main Steam piping have redundant safety-related isolation valves that automatically close on a LOCA signal. Questions 1, 2, and 3 are answered "No."

In addition, Safety/Relief Valves are safety-related. Therefore, there are no RTNSS candidates from this category.

20.2.3.6 Shutdown Loss of Preferred Power

The causes and effects of loss of preferred (that is, offsite) power initiating event during shutdown are similar to at-power conditions, which were discussed previously.

20.2.3.7 Loss of Shutdown Cooling

The decay heat removal function during shutdown modes of operation is provided by the Reactor Water Cleanup/Shutdown Cooling System (RWCU/SDCS) System operating in shutdown cooling mode. Shutdown risk is dominated by loss of coolant events. Therefore, RWCU/SDC components have a relatively low importance and it is unlikely that their performance would degrade to the point where there is a measurable effect on Core Damage Frequency. During Mode 5, in addition to RWCU/SDC, decay heat removal can be provided by safety-related ICS. During Mode 6, FAPCS may be used as an alternative. FAPCS suppression pool cooling and low pressure injection functions can remove decay heat, and they are in the RTNSS category with regulatory oversight in the form of availability controls.

If the reactor well is flooded, the risk associated with loss of decay heat removal is negligible because the large amount of water stored above the core assures long-term core cooling.

With the reactor well unflooded, it is assumed that both RWCU/SDC trains are in service and that one train is sufficient to remove decay heat while maintaining stable reactor coolant temperature. Therefore, if one RWCU pump were to trip in this configuration, it would not initiate a loss of shutdown cooling event, and Questions 1, 2, and 3 are answered "No."

There are no RTNSS candidates for regulatory oversight.

20.2.3.8 Shutdown LOCA

The frequency of Shutdown LOCA events is lower than at full power, due to the reduced vessel pressure and temperature. Also, the fact that control rods are fully inserted, the reduced pressure and temperature of the reactor coolant, and the lower decay heat level allow for longer times available for recovery actions.

Breaks outside containment can be originated only in ICS, RWCU/SDC or FAPCS piping, or instrument lines, because these are the only systems that remove reactor coolant from the containment during shutdown. The rest of the RPV vessel piping is isolated. The RWCU/SDC and FAPCS containment penetrations have redundant and automatic power-operated safety-related containment isolation valves that close on signals from the leak detection and isolation system and the reactor protection system. The ICS lines have redundant power operated safety-related isolation valves inside containment to terminate a loss of inventory in the event of an ICS line break outside of containment. Questions 1, 2, and 3 are answered "No."

There are no RTNSS candidates from this category, although availability controls on the lower drywell hatches are provided.

20.2.4 Summary of RTNSS Candidates from Criterion C

The focused PRA sensitivity study requires certain portions of DPS being designated as RTNSS. The portions that provide capability for a manual backup of safety-related automatic actuation of ECCS provides the level of protection necessary to meet both the CDF and LRF goals.

The assessment of uncertainties concludes that the defense-in-depth role of FAPCS in providing a backup source of low pressure injection and suppression pool cooling is within the requirements for RTNSS.

Table 20.2-1

PRA Focus Results (DELETED)

20.3 SELECTION OF IMPORTANT NON-SAFETY SYSTEMS

The selection of RTNSS systems considers nonsafety-related SSCs that are necessary to meet NRC regulations, safety goal guidelines, and containment performance goal objectives. RTNSS systems needed to meet the NRC regulations specified in Criteria A, B and E are based on deterministic analyses. RTNSS systems needed to meet Criteria C and D are based on PRA insights.

Results of the regulatory treatment assessment are summarized in DCD Tier 2, Chapter 19A.

Table 20.3-1

RTNSS Systems (DELETED)

20.4 PROPOSED REGULATORY OVERSIGHT

20.4.1 Regulatory Oversight

Regulatory oversight is applied to each system designated as RTNSS to ensure that it has sufficient reliability and availability to perform its RTNSS function, as defined by the focused PRA, or deterministic criteria. The extent of oversight is commensurate with the safety significance of the RTNSS function, and is categorized as either High Regulatory Oversight (HRO), Low Regulatory Oversight (LRO), or Support.

HRO - If the focused PRA analysis determines that a RTNSS system is significant to public health and safety (that is, necessary to meet the NRC safety goals) then it is classified as HRO. Technical Specification Limiting Condition for Operation should be established for the system/component, in accordance with 10 CFR 50.36.

LRO - If a RTNSS system is not significant, as described above, then the proposed level of regulatory oversight is Low Regulatory Oversight (LRO), which is addressed in regulatory availability specifications, which are described in the Availability Control Manual.

Support – These systems have low risk significance and they provide support (generally component and room cooling) for RTNSS systems that provide active mitigation functions. Treatment of support systems relative to the systems they support is described in the Availability Control Manual. The relationship between RTNSS support systems is illustrated in Figures 20.4-1 through 20.4-3.

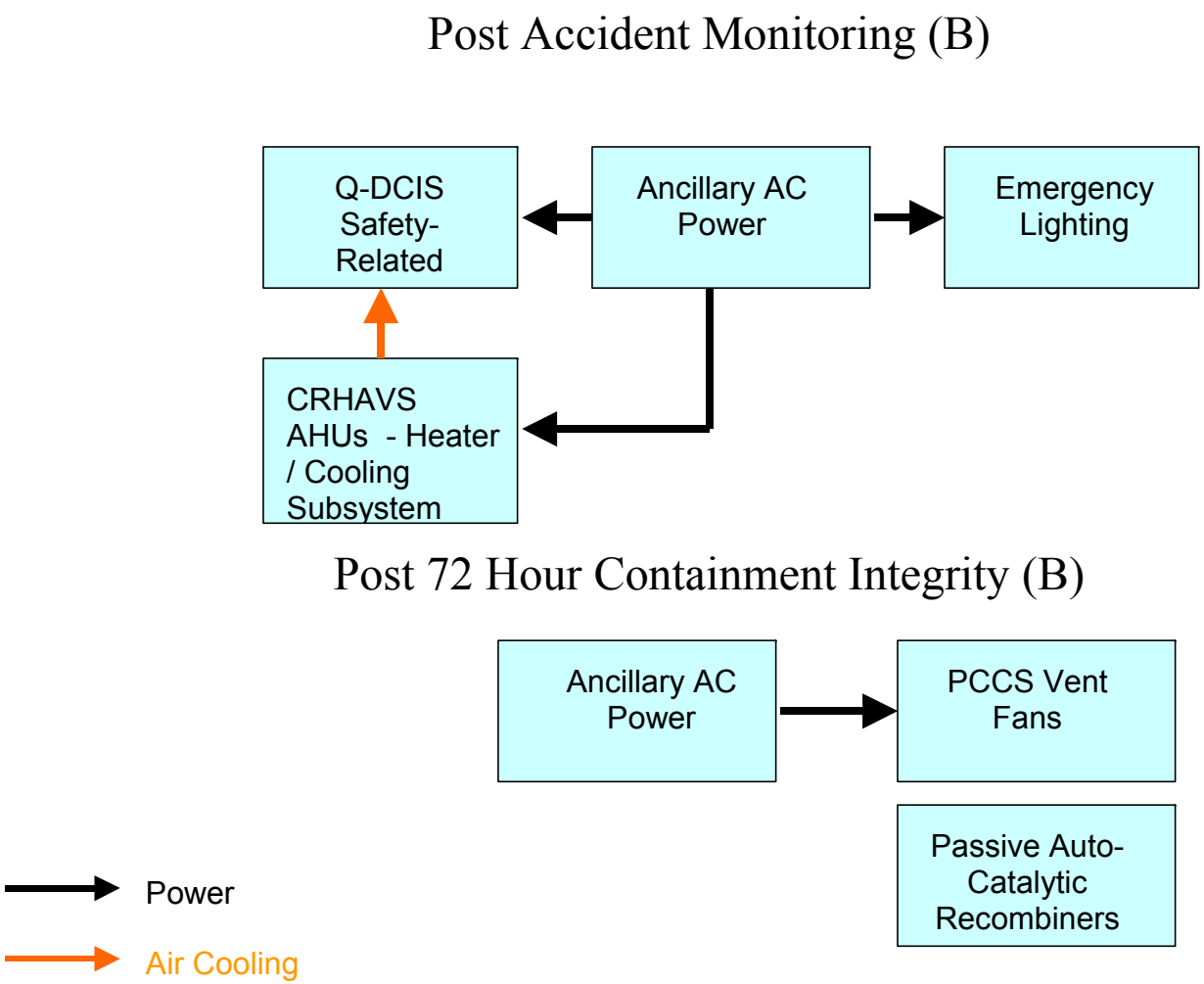

Figure 20.4-1 RTNSS Functional Relationships Supporting Post Accident Monitoring and Containment Integrity

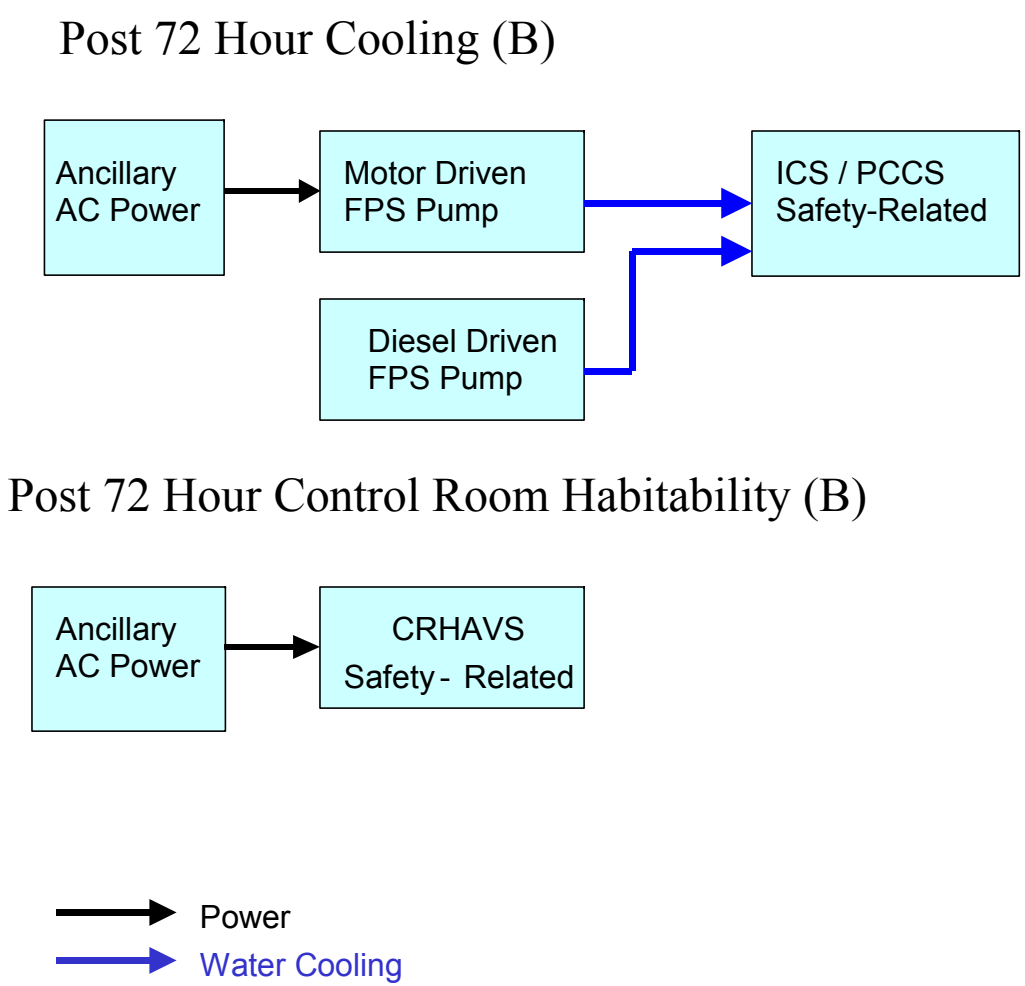

Figure 20.4-2 RTNSS Functional Relationships Supporting Post 72 hour Cooling & Control Room Habitability

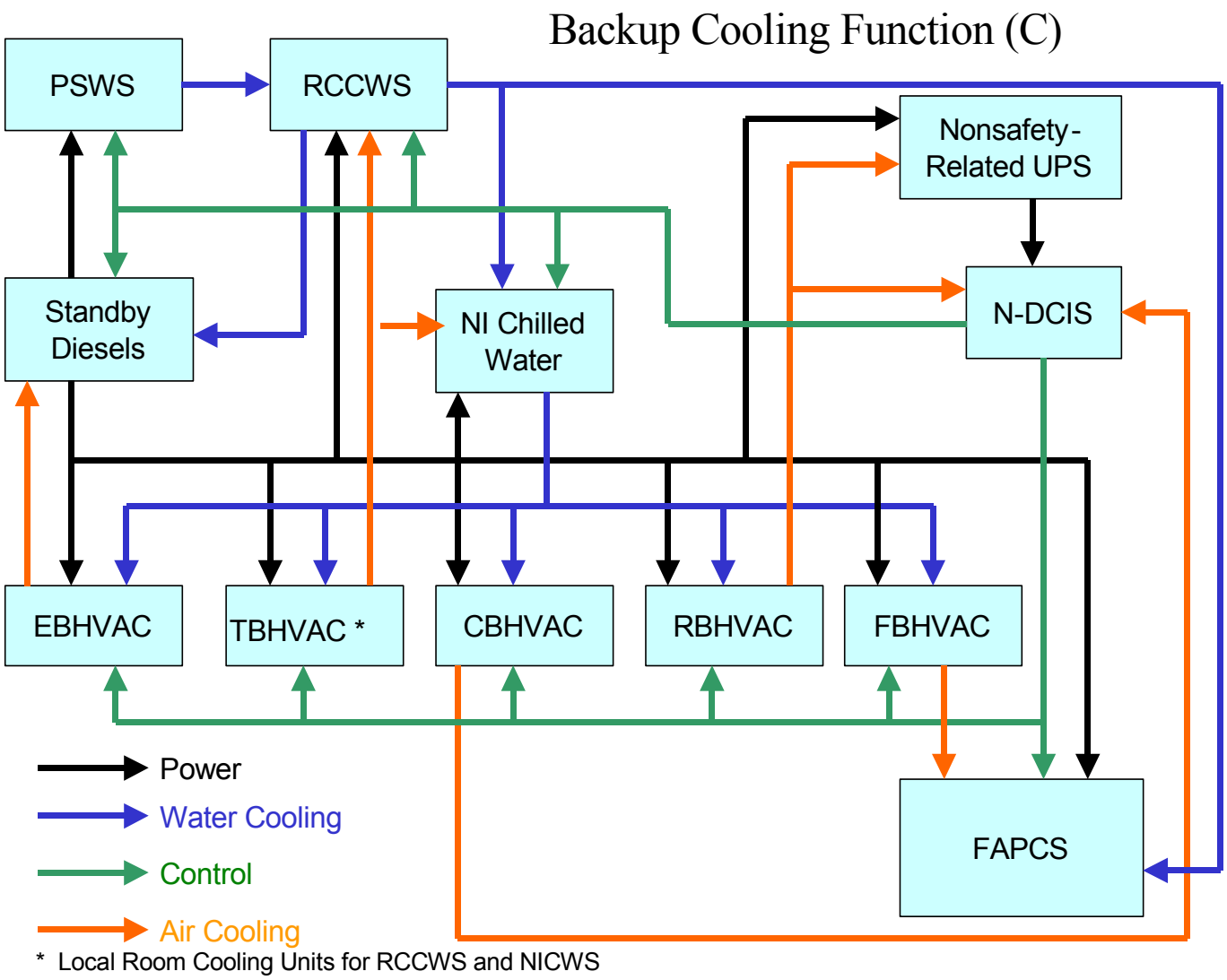

Figure 20.4-3 RTNSS Functional Relationships Supporting Backup Cooling Functions

20.5 ADDITIONAL INFORMATION

20.5.1 RTNSS Functions, Fault Tree Logic, and Components

Table 20.5-1, Example RTNSS Functions, Fault Tree Logic, and Components, provides insight as to the gate(s) representing the RTNSS function and the components working to fulfill those functions along with the specific basic events with which they are associated. This is provided as information only and not intended to duplicate the full scope and detail contained in the current model depicted in the various detailed sections of this document. Accordingly, the examples in Table 20.5.1 are not updated with each PRA revision.

Table 20.5-1

Example RTNSS Functions, Fault Tree Logic, and Components

System/ Subsystem	RTNSS Functions	Fault Tree Logic ID	Basic Event(s)	Component(s)
ARI	Automatically depressurize scram header on ATWS signal. C72-ARIRXSCRAM, ARI VALVES FAIL TO VENT AIR HEADER	C72-ARIX, ARI VALVEs FAIL TO OPEN OR DPS FAILS TO GENERATE ACTUATION SIGNAL C72-ARIDPSD1PR, HIGH RPV PRESSURE SIGNAL TO DPS DIV I CONTROLLER C72-ARIDPSD2PR, HIGH RPV PRESSURE SIGNAL TO DPS DIV II CONTROLLER	C72-LOG-FC-D1DPS C72-LOG-FC-D2DPS C72-LOG-FC-D3DPS R13-BAC-LP-R13CBA R13-BAC-LP-R13CBB R13-BAC-LP-R13CBC C12-SOV-FE-F043A C12-SOV-FE-F043B C12-SOV-FE-F044A C12-SOV-FE-F044B C12-SOV-FE-F038 C12-SOV-FE-F039 C12-SOV-FE-F042 R13-BAC-LP-R13RBA R13-BAC-LP-R13RBB R13-BAC-LP-R13RBC C72-ATM-FC-DPSPRA C72-ATM-FC-DPSPRB C72-ATM-FC-	DIVISION 1 LOGIC UNIT DIVISION 2 LOGIC UNIT DIVISION 3 LOGIC UNIT NSR R13 CONTROL BLDG LOAD GROUP A NSR R13 CONTROL BLDG LOAD GROUP B NSR R13 CONTROL BLDG LOAD GROUP C SOLENOID VALVE F043A SOLENOID VALVE F043B SOLENOID VALVE F044A SOLENOID VALVE F044B SOLENOID VALVE F038 SOLENOID VALVE F039 SOLENOID VALVE F042 NSR R13 REACTOR BLDG LOAD GROUP A NSR R13 REACTOR BLDG LOAD GROUP B NSR R13 REACTOR BLDG LOAD GROUP C ANALOG TRIP MODULE SIGNAL FOR HIGH

Table 20.5-1

Example RTNSS Functions, Fault Tree Logic, and Components

System/ Subsystem	RTNSS Functions	Fault Tree Logic ID	Basic Event(s)	Component(s)
			DPSPRC C72-ATM-FC-DPSPRD C62-ISIG8-PT1A C62-ISIG8-PT1B C62-ISIG8-PT1C C62-ISIG8-PT1D	PRESSURE A ANALOG TRIP MODULE SIGNAL FOR HIGH PRESSURE B ANALOG TRIP MODULE SIGNAL FOR HIGH PRESSURE C ANALOG TRIP MODULE SIGNAL FOR HIGH PRESSURE D RCSPRESS from PT1A RCSPRESS from PT1B RCSPRESS from PT1C RCSPRESS from PT1D
ARI		C72-ARIDPSD1LL, LOW LEVEL SIGNAL TO DPS DIV I CONTROLLER C72-ARIDPSD2LL, LOW LEVEL SIGNAL TO DPS DIV II CONTROLLER	C62-ISIG9-LTA C62-ISIG9-LTB C62-ISIG9-LTC C62-ISIG9-LTD C72-ATM-FC-DPSLLA C72-ATM-FC-DPSLLB C72-ATM-FC-DPSLLC C72-ATM-FC-DPSLLD	RCSLEVEL from LTA RCSLEVEL from LTB RCSLEVEL from LTC RCSLEVEL from LTD ANALOG TRIP MODULE SIGNAL FOR LOW LEVEL A (L2) ANALOG TRIP MODULE SIGNAL FOR LOW LEVEL B (L2) ANALOG TRIP MODULE SIGNAL FOR LOW LEVEL C (L2)

Table 20.5-1

Example RTNSS Functions, Fault Tree Logic, and Components

System/ Subsystem	RTNSS Functions	Fault Tree Logic ID	Basic Event(s)	Component(s)
				ANALOG TRIP MODULE SIGNAL FOR LOW LEVEL D (L2)
BiMAC	Provide core debris cooling in LDW through deluge valves. BI_SP, GDCS DELUGE SUPPLY FAILS TO OPEN Modeled in Level 2 only.	POINT ESTIMATE E50-DELUGE-MECH, MECHANICAL FAILURES	L2-BI_FN-ESTIMATE E50-SQV-CC-F1-A1 E50-RE_-FD-FA1-1 E50-RE_-FD-FA1-2 E50-SQV-CC-F2-A2 E50-RE_-FD-FA2-1 E50-RE_-FD-FA2-2 E50-SQV-CC-F3-A3 E50-RE_-FD-FA3-1 E50-RE_-FD-FA3-2 E50-SQV-CC-F1-B1 E50-RE_-FD-FB1-1 E50-RE_-FD-FB1-2 E50-SQV-CC-F2-B2 E50-RE_-FD-FB2-1 E50-RE_-FD-FB2-2 E50-SQV-CC-F3-B3 E50-RE_-FD-FB3-1 E50-RE_-FD-FB3-2 E50-SQV-CC-F1-C1 E50-RE_-FD-FC1-1 E50-RE_-FD-FC1-2 E50-SQV-CC-F2-C2	CORE NOT COOLED BY DELUGE FLOW SQUIB VALVE FA1 ELECTROMECHANICAL RELAY ELECTROMECHANICAL RELAY SQUIB VALVE FA3 ELECTROMECHANICAL RELAY ELECTROMECHANICAL RELAY SQUIB VALVE FA3 ELECTROMECHANICAL RELAY ELECTROMECHANICAL RELAY SQUIB VALVE FB1 ELECTROMECHANICAL RELAY ELECTROMECHANICAL RELAY SQUIB VALVE FB2 ELECTROMECHANICAL RELAY

Table 20.5-1

Example RTNSS Functions, Fault Tree Logic, and Components

System/ Subsystem	RTNSS Functions	Fault Tree Logic ID	Basic Event(s)	Component(s)
			E50-RE_-FD-FC2-1	ELECTROMECHANICAL RELAY SQUIB VALVE FB3 ELECTROMECHANICAL RELAY ELECTROMECHANICAL RELAY SQUIB VALVE FC1 ELECTROMECHANICAL RELAY ELECTROMECHANICAL RELAY SQUIB VALVE FC2 ELECTROMECHANICAL RELAY
BiMAC		E50-DELUGE-ACT, ACTUATION FAILURES	E50-RE_-FD-FC2-2 E50-SQV-CC-F3-C3 E50-RE_-FD-FC3-1 E50-RE_-FD-FC3-2 E50-SQV-CC-F1-D1 E50-RE_-FD-FD1-1 E50-RE_-FD-FD1-2 E50-SQV-CC-F2-D2 E50-RE_-FD-FD2-1 E50-RE_-FD-FD2-2 E50-SQV-CC-F3-D3 E50-RE_-FD-FD3-1 E50-RE_-FD-FD3-2	ELECTROMECHANICAL RELAY SQUIB VALVE FC3 ELECTROMECHANICAL RELAY ELECTROMECHANICAL RELAY SQUIB VALVE FD1 ELECTROMECHANICAL RELAY ELECTROMECHANICAL RELAY SQUIB VALVE FD2 ELECTROMECHANICAL

Table 20.5-1

Example RTNSS Functions, Fault Tree Logic, and Components

System/ Subsystem	RTNSS Functions	Fault Tree Logic ID	Basic Event(s)	Component(s)
				RELAY
			E50-BT_-LP-SQUIBS-TR1	ELECTROMECHANICAL RELAY
			E50-TT_-NO-PRI-A-TR1	SQUIB VALVE FD3
			E50-TT_-NO-ADJ-1A-TR1	ELECTROMECHANICAL RELAY
			E50-TT_-NO-ADJ-2A-TR1	ELECTROMECHANICAL RELAY
			E50-LOG-FC-THERM-A-TR1	TRAIN 1 SQUIB-FIRING BATTERY
			E50-BT_-LP-PLCA-TR1	TRAIN 1 PRIMARY THERMOCOUPLE A
			E50-TS_-CC-CHA-TR1	TRAIN 1 ADJACENT THERMOCOUPLE 1A
			E50-RE_-FO-CH1A-S-TR1	TRAIN 1ADJACENT THERMOCOUPLE 2A
			E50-TT_-NO-PRI-B-TR1	TRAIN 1 LOGIC UNIT
			E50-TT_-NO-ADJ-1B-TR1	TRAIN 1 DEDICATED PLC A BATTERY
			E50-TT_-NO-ADJ-2B-TR1	TRAIN 1 TEMPERATURE SWITCH
			E50-LOG-FC-THERM-B-TR1	TRAIN 1 OUTPUT RELAY 1A-S
			E50-BT_-LP-PLCB-TR1	TRAIN 1 PRIMARY THERMOCOUPLE B
			E50-TS_-CC-CHB-TR1	TRAIN 1 ADJACENT THERMOCOUPLE 1B
			E50-RE_-FO-CH1B-	

Table 20.5-1

Example RTNSS Functions, Fault Tree Logic, and Components

System/ Subsystem	RTNSS Functions	Fault Tree Logic ID	Basic Event(s)	Component(s)
			S-TR1 E50-BT_-LP-SQUIBS-TR2 E50-TT_-NO-PRI-A-TR2 E50-TT_-NO-ADJ-1A-TR2 E50-TT_-NO-ADJ-2A-TR2	TRAIN 1 ADJACENT THERMOCOUPLE 2B TRAIN 1 LOGIC UNIT TRAIN 1 DEDICATED PLC B BATTERY TRAIN 1 TEMPERATURE SWITCH TRAIN 1 OUTPUT RELAY 1B-S TRAIN 2 SQUIB-FIRING BATTERY TRAIN 2 PRIMARY THERMOCOUPLE A TRAIN 2 ADJACENT THERMOCOUPLE 1A TRAIN 2 ADJACENT THERMOCOUPLE 2A
BiMAC		E50-DELUGE-ACT, ACTUATION FAILURES (continued)	E50-LOG-FC-THERM-A-TR2 E50-BT_-LP-PLCA-TR2 E50-TS_-CC-CHA-TR2 E50-RE_-FO-CH1A-S-TR2 E50-TT_-NO-PRI-B-TR2 E50-TT_-NO-ADJ-	TRAIN 2 LOGIC UNIT TRAIN 2 DEDICATED PLC A BATTERY TRAIN 2 TEMPERATURE SWITCH TRAIN 2 OUTPUT RELAY 1A-S TRAIN 2 PRIMARY THERMOCOUPLE B

Table 20.5-1

Example RTNSS Functions, Fault Tree Logic, and Components

System/ Subsystem	RTNSS Functions	Fault Tree Logic ID	Basic Event(s)	Component(s)
			1B-TR2 E50-TT_-NO-ADJ-2B-TR2 E50-LOG-FC-THERM-B-TR2 E50-BT_-LP-PLCB-TR2 E50-TS_-CC-CHB-TR2 E50-RE_-FO-CH1B-S-TR2	TRAIN 2 ADJACENT THERMOCOUPLE 1B TRAIN 2 ADJACENT THERMOCOUPLE 2B TRAIN 2 LOGIC UNIT TRAIN 2 DEDICATED PLC B BATTERY TRAIN 2 TEMPERATURE SWITCH TRAIN 2 OUTPUT RELAY 1B-S
Control Room Area Ventilation	Portable Generator for post 72-hour ventilation	Not modeled		
DPS	Diverse actuation of ECCS functions.	Not specifically modeled, contained within several other modeled functions		
Drywell Hatches	Provide boundary for recovering vessel level following a Shutdown LOCA below top of fuel event	OPERATOR ACTIONS	DWH-1 DWH-2	Lower Drywell Hatches
Feedwater Runback	Run FW demand to minimum on ATWS signal.		R13-BAC-LP-R13TBA R13-BAC-LP-R13TBB	NSR R13 TURBINE/SWGR BLDG LOAD GROUP A NSR R13 TURBINE/SWGR BLDG

Table 20.5-1

Example RTNSS Functions, Fault Tree Logic, and Components

System/ Subsystem	RTNSS Functions	Fault Tree Logic ID	Basic Event(s)	Component(s)
	CF-TOPRB, FEEDWATER RUN BACK FAILURE	C72-FWRBLDD1, LOAD DRIVER FAILS TO ENERGIZE CIRCUIT	R13-BAC-LP-R13TBC C72-LDD-FC-FWRB1	LOAD GROUP B NSR R13 TURBINE/SWGR BLDG LOAD GROUP C LOAD DRIVER
Feedwater Runback		C72-FWRBCONTROL1, DPS DIV I FW RUN BACK SIGNAL C72-FWRBCONTROL2, DPS DIV II FW RUN BACK SIGNAL C72-FWRBCONTROL3, DPS DIV III FW RUN BACK SIGNAL C72-FWRBLDD2, LOAD DRIVER FAILS TO ENERGIZE CIRCUIT C72-FWRBCONTROL1, DPS DIV I FW RUN BACK SIGNAL	C72-LOG-FC-D1DPS R13-BAC-LP-R13CBA R13-BAC-LP-R13CBB R13-BAC-LP-R13CBC C72-LOG-FC-D2DPS R13-BAC-LP-R13CBA R13-BAC-LP-R13CBB R13-BAC-LP-R13CBC C72-LOG-FC-D3DPS R13-BAC-LP-R13CBA R13-BAC-LP-	DIV 1 DPS LOGIC UNIT NSR R13 CONTROL BLDG LOAD GROUP A NSR R13 CONTROL BLDG LOAD GROUP B NSR R13 CONTROL BLDG LOAD GROUP C DIV 2 DPS LOGIC UNIT NSR R13 CONTROL BLDG LOAD GROUP A NSR R13 CONTROL BLDG LOAD GROUP B NSR R13 CONTROL BLDG LOAD GROUP C DIV 3 DPS LOGIC UNIT NSR R13 CONTROL BLDG LOAD GROUP A NSR R13 CONTROL

Table 20.5-1

Example RTNSS Functions, Fault Tree Logic, and Components

System/ Subsystem	RTNSS Functions	Fault Tree Logic ID	Basic Event(s)	Component(s)
			R13CBB	BLDG LOAD GROUP B
		C72-FWRBCONTROL2, DPS DIV II FW RUN BACK SIGNAL	R13-BAC-LP-R13CBC	NSR R13 CONTROL BLDG LOAD GROUP C
			C72-LDD-FC-FWRB2	LOAD DRIVER
		C72-FWRBCONTROL3, DPS DIV III FW RUN BACK SIGNAL		DIV 1 DPS LOGIC UNIT
			C72-LOG-FC-D1DPS	NSR R13 CONTROL BLDG LOAD GROUP A
			R13-BAC-LP-R13CBA	NSR R13 CONTROL BLDG LOAD GROUP B
			R13-BAC-LP-R13CBB	NSR R13 CONTROL BLDG LOAD GROUP C
			R13-BAC-LP-R13CBC	DIV 2 DPS LOGIC UNIT
			C72-LOG-FC-D2DPS	NSR R13 CONTROL BLDG LOAD GROUP A
			R13-BAC-LP-R13CBA	NSR R13 CONTROL BLDG LOAD GROUP B
			R13-BAC-LP-R13CBB	NSR R13 CONTROL BLDG LOAD GROUP C
			R13-BAC-LP-R13CBC	DIV 3 DPS LOGIC UNIT
			C72-LOG-FC-D3DPS	NSR R13 CONTROL BLDG LOAD GROUP A
			R13-BAC-LP-R13CBA	NSR R13 CONTROL BLDG LOAD GROUP B
			R13-BAC-LP-R13CBB	NSR R13 CONTROL

Table 20.5-1

Example RTNSS Functions, Fault Tree Logic, and Components

System/ Subsystem	RTNSS Functions	Fault Tree Logic ID	Basic Event(s)	Component(s)
			R13-BAC-LP-R13CBC	BLDG LOAD GROUP C
LCS Actuation	Backup actuation logic to initiate SLCS and isolate RWCU/SDC. BC-TOPRWCU, FAILURE TO ISOLATE BREAK OUTSIDE CONTAINMENT IN RWCU LINE	T10-RWCU-F004A-OO, NONSAFETY-RELATED AIR OPERATED VALVE F004A FAILS TO CLOSE T10-RWCU-F044A-OO, NONSAFETY-RELATED MOTOR OPERATED VALVE F044A FAILS TO CLOSE T10-RWCU-F004B-OO, NONSAFETY-RELATED AIR OPERATED VALVE F004B FAILS TO CLOSE	G31-ACV-OO-F004A C72-LDD-FC-S1G31F3A C72-LDD-FC-S2G31F3A R13-BAC-LP-R13RBA R13-BAC-LP-R13RBB C72-LOG-FC-D1DPS C72-LOG-FC-D2DPS C72-LOG-FC-D3DPS G31-MOV-OO-F044A C72-LDD-FC-S1G31F8A C72-LDD-FC-S2G31F8A R12-BAC-LP-A2-02A R13-BAC-LP-R13RBA R13-BAC-LP-R13RBB C72-LOG-FC-D1DPS C72-LOG-FC-D2DPS C72-LOG-FC-D3DPS	NSR ACV F004A RWCU/SDC F003A FIRST SERIES LOAD DRIVER RWCU/SDC F003A SECOND SERIES LOAD DRIVER NSR R13 REACTOR BLDG LOAD GROUP A NSR R13 REACTOR BLDG LOAD GROUP B DIVISION 1 LOGIC UNIT DIVISION 2 LOGIC UNIT DIVISION 3 LOGIC UNIT MOTOR OPERATED VALVE F044A RWCU/SDC F008A FIRST SERIES LOAD DRIVER RWCU/SDC F008A SECOND SERIES LOAD DRIVER 480 VAC BUS A2-02A NSR R13 REACTOR BLDG LOAD GROUP A NSR R13 REACTOR

Table 20.5-1

Example RTNSS Functions, Fault Tree Logic, and Components

System/ Subsystem	RTNSS Functions	Fault Tree Logic ID	Basic Event(s)	Component(s)
			G31-ACV-OO-F004B C72-LDD-FC-S1G31F3B C72-LDD-FC-S2G31F3B R13-BAC-LP-R13RBA R13-BAC-LP-R13RBB C72-LOG-FC-D1DPS C72-LOG-FC-D2DPS C72-LOG-FC-D3DPS	BLDG LOAD GROUP B DIVISION 1 LOGIC UNIT DIVISION 2 LOGIC UNIT DIVISION 3 LOGIC UNIT NSR ACV F004B RWCU/SDC F003B FIRST SERIES LOAD DRIVER RWCU/SDC F003B SECOND SERIES LOAD DRIVER NSR R13 REACTOR BLDG LOAD GROUP A NSR R13 REACTOR BLDG LOAD GROUP B DIVISION 1 LOGIC UNIT DIVISION 2 LOGIC UNIT DIVISION 3 LOGIC UNIT
SLCS Actuation		T10-RWCU-F044B-OO, NONSAFETY-RELATED MOTOR OPERATED VALVE F044B FAILS TO CLOSE	G31-MOV-OO-F044B C72-LDD-FC-S1G31F8B C72-LDD-FC-S2G31F8B R12-BAC-LP-B2-02B R13-BAC-LP-R13RBA R13-BAC-LP-R13RBB C72-LOG-FC-D1DPS C72-LOG-FC-D2DPS C72-LOG-FC-D3DPS	MOTOR OPERATED VALVE F044B RWCU/SDC F008B FIRST SERIES LOAD DRIVER RWCU/SDC F008B SECOND SERIES LOAD DRIVER 480 VAC BUS B2-02B NSR R13 REACTOR BLDG LOAD GROUP A NSR R13 REACTOR BLDG

Table 20.5-1

Example RTNSS Functions, Fault Tree Logic, and Components

System/ Subsystem	RTNSS Functions	Fault Tree Logic ID	Basic Event(s)	Component(s)
				LOAD GROUP B DIVISION 1 LOGIC UNIT DIVISION 2 LOGIC UNIT DIVISION 3 LOGIC UNIT
DCIS				
TB HVAC	Provide post 72-hour cooling for DCIS in Turbine Building.	Not modeled		
TB HVAC	Provide room cooling for RCCW pumps.	Not specifically modeled, contained within several other modeled functions		
CB HVAC	Provide post 72-hour cooling for DCIS and Control Room habitability.	Not modeled		
Chilled Water System	Provide post 72-hour cooling for HVAC.	Not modeled		
EB HVAC	Provide post 72-hour cooling for DGs and 1E Electrical Distribution.	Not modeled		
PSW	Provide post 72-hour cooling for RCCWS.	Not modeled		
RB HVAC	Provide post 72-hour cooling for DCIS.	Not modeled		
RCCWS	Provide post 72-hour cooling for Chillers and DGs.	Not modeled		
FAPCS				

Table 20.5-1

Example RTNSS Functions, Fault Tree Logic, and Components

System/ Subsystem	RTNSS Functions	Fault Tree Logic ID	Basic Event(s)	Component(s)
Chilled Water System	Provide cooling support for FAPCS.		NICWSA-SYS-FAILS NICWSB-SYS-FAILS	NUCLEAR ISLAND CHILLED WATER SUBSYSTEM TRAIN A NUCLEAR ISLAND CHILLED WATER SUBSYSTEM TRAIN B
Diesel Generator	Provide power for FAPCS and support systems. (Non-seismic PRA sequences.) G102, LOSS OF ELECTRICAL POWER WHICH WOULD LEAD TO TRAIN SEPARATION	R21-DGA-0020, DG-A FAILS TO RUN R21-DGA-0060, DG-A FUEL OIL STORAGE & TRANSFER SYSTEM FAILURE R21-DGA-0080, DG-A JACKET COOLING FAILURE	R21-DG_-FR-DGA R21-TNK-RP-1A R12-BAC-LP-A2-01A R21-BV_-OC-F1A R21-MP_-FR-P1A R21-UV_-CC-F3A R21-BV_-OC-F5A R21-BV_-OC-F2A R21-MP_-FR-P2A R21-UV_-CC-F4A R21-BV_-OC-F6A R21-FLT-PG-DGA R21-TNK-RP-2A R21-BV_-OC-F7A R21-LT_-NO-DGA P21-ACV-OO-F023A	DIESEL GENERATOR "A" TANK 1A 480 VAC BUS A2-01A MANUAL VALVE MOTOR DRIVEN PUMP CHECK VALVE MANUAL VALVE MANUAL VALVE MOTOR DRIVEN PUMP CHECK VALVE MANUAL VALVE FILTER TANK MANUAL VALVE LEVEL TRANSMITTER AIR OPERATED VALVE F023A
Diesel Generator		P21-0016-_1-LL, HEAT EXCHANGER 0001A FAILURES (RCCW HX 0001A IN STANDBY)	P21-MOV-CC-F034A P21-MOV-OC-F0010A1 P21-HX_-LK-B001A P41-ACV-OC-F002A	MOV P21-F034A FROM RCCWS TO RWCU/SDC HX-A MOTOR OPERATED VALVE F0010A1 HEAT EXCHANGER B001A

Table 20.5-1

Example RTNSS Functions, Fault Tree Logic, and Components

System/ Subsystem	RTNSS Functions	Fault Tree Logic ID	Basic Event(s)	Component(s)
		P21-0016-_3-LL, HEAT EXCHANGER 0002A FAILURES (RCCW HX 0002A IN STANDBY)	P41-ACV-CC-F009A P41-MOV-OC-F003A P21-ACV-OO-F016A P21-ACV-OC-F012A P21-MOV-CC-F034B P21-MOV-OC-F0010A2 P21-HX_-LK-B002A P41-ACV-OC-F002A P41-ACV-OC-F004A P41-MOV-OC-F005A P21-ACV-OO-F016A P21-ACV-OC-F012A P21-MOV-CC-F0010A3 P21-HX_-LK-B003A P41-ACV-OC-F002A P41-ACV-CC-F006A P41-MOV-OC-F007A R21-FAN-FR-AHU2A R21-AHU-FR-3A R21-FAN-FR-10A R21-FAN-FR-11A R21-FAN-FR-12A R21-MOD-CC-1A R21-MOD-CC-2A R21-MOD-CC-3A R21-MOD-CC-4A R21-MOD-CC-5A	AIR OPERATED VALVE MV-F002A AIR OPERATED VALVE F009A MOTOR OPERATED VALVE F003A AIR OPERATED VALVE F016A AIR OPERATED VALVE F012A MOV P21-F034B FROM RCCWS TO RWCU/SDC HX-B MOTOR OPERATED VALVE F0010A2 HEAT EXCHANGER B002A AIR OPERATED VALVE MV-F002A AIR OPERATED VALVE MV-F004A MOTOR OPERATED VALVE MV-F005A AIR OPERATED VALVE F016A AIR OPERATED VALVE F012A MOTOR OPERATED VALVE F0010A3 HEAT EXCHANGER B003A AIR OPERATED VALVE MV-F002A AIR OPERATED VALVE MV-F006A MOTOR OPERATED VALVE MV-F007A
		P21-0016-_5-LL, HEAT EXCHANGER 0003A FAILURES (RCCW HX 0003A IN STANDBY)		
		R21-DGA-0050, DG-A ROOM COOLING FAILURE		

Table 20.5-1

Example RTNSS Functions, Fault Tree Logic, and Components

System/ Subsystem	RTNSS Functions	Fault Tree Logic ID	Basic Event(s)	Component(s)
				DG-A NORMAL VENTILATION FAN AIR HANDLING UNIT BLOWER/VENTILATION FAN BLOWER/VENTILATION FAN BLOWER/VENTILATION FAN MOTOR OPERATED DAMPER 1A MOTOR OPERATED DAMPER 2A MOTOR OPERATED DAMPER 3A MOTOR OPERATED DAMPER 4A MOTOR OPERATED DAMPER 5A
Diesel Generator		R21-DGB-0020, DG-B FAILS TO RUN R21-TRANSFERB, FUEL OIL TRANSFER FAILURE FOR DG-B	R21-MOD-CC-6A R12-BAC-LP-A2-01A R21-DG_-FR-DGB R21-FLT-PG-DGB R21-BV_-OC-F1B R21-MP_-FR-P1B R21-UV_-CC-F3B R21-BV_-OC-F5B R21-BV_-OC-F2B R21-MP_-FR-P2B R21-UV_-CC-F4B R21-BV_-OC-F6B R12-BAC-LP-B2-01B	MOTOR OPERATED DAMPER 6A 480 VAC BUS A2-01A DIESEL GENERATOR "B" FILTER MANUAL VALVE MOTOR-DRIVEN PUMP CHECK VALVE MANUAL VALVE MANUAL VALVE MOTOR DRIVEN PUMP CHECK VALVE MANUAL VALVE

Table 20.5-1

Example RTNSS Functions, Fault Tree Logic, and Components

System/ Subsystem	RTNSS Functions	Fault Tree Logic ID	Basic Event(s)	Component(s)
		R21-DGB-0080, DG-B JACKET COOLING FAILURE	R21-TNK-RP-1B R21-TNK-RP-2B R21-BV_-OC-F7B R21-LT_-NO-DGB P21-ACV-OO-F023B P21-MPC-FR-C001B P21-AHU-FR-RCCWB NICWSB-SYS-FAILS P21-UV_-CC-0001B1 P21-MPC-FR-C002B P21-UV_-CC-0001B2 P21-MPC-FR-C003B P21-UV_-CC-0001B3 P21-ACV-CC-F0023B P21-TNK-RP-0001B P21-ACV-OO-F0004 P21-ACV-OO-F0007	480 VAC BUS B2-01B TANK TANK MANUAL VALVE LEVEL TRANSMITTER AIR OPERATED VALVE MOTOR DRIVEN PUMP C001B AIR HANDLING UNIT RCCWS ROOM TRAIN B NUCLEAR ISLAND CHILLED WATER SUBSYSTEM TRAIN B CHECK VALVE 0001B1 MOTOR-DRIVEN PUMP C002B CHECK VALVE 0001B2 MOTOR-DRIVEN PUMP C003B CHECK VALVE 0001B3 AIR OPERATED VALVE F0023B RCCW SURGE TANK 0001B AIR OPERATED VALVE F0004 AIR OPERATED VALVE F0007
Diesel Generator		R21-DGB-0050, DG-B ROOM COOLING FAILURE	P21-ACV-OO-F0020 P21-ACV-OO-F0027 P21-ACV-OO-F0061 R21-FAN-FR-AHU2B R21-FAN-FR-10B R21-FAN-FR-11B	AIR OPERATED VALVE F0020 AIR OPERATED VALVE F0027 AIR OPERATED VALVE F0061 BLOWER/VENTILATION FAN BLOWER/VENTILATION FAN BLOWER/VENTILATION FAN

Table 20.5-1

Example RTNSS Functions, Fault Tree Logic, and Components

System/ Subsystem	RTNSS Functions	Fault Tree Logic ID	Basic Event(s)	Component(s)
			R21-FAN-FR-12B R21-MOD-CC-1B R21-MOD-CC-2B R21-MOD-CC-3B R21-MOD-CC-4B R21-MOD-CC-5B R21-MOD-CC-6B R21-AHU-FR-3B R12-BAC-LP-B2-01B	BLOWER/VENTILATION FAN MOTOR-OPERATED DAMPER MOTOR-OPERATED DAMPER MOTOR-OPERATED DAMPER MOTOR-OPERATED DAMPER MOTOR-OPERATED DAMPER MOTOR-OPERATED DAMPER AIR HANDLING UNIT 480 VAC BUS B2-01B
EB HVAC	Provide support for electrical power to FAPCS.	R21-DGA-0050, DG-A ROOM COOLING FAILURE R21-DGB-0050, DG-B ROOM COOLING FAILURE	R21-FAN-FR-AHU2A R21-AHU-FR-3A R21-FAN-FR-10A R21-FAN-FR-11A R21-FAN-FR-12A R21-MOD-CC-1A R21-MOD-CC-2A R21-MOD-CC-3A R21-MOD-CC-4A R21-MOD-CC-5A R21-MOD-CC-6A R12-BAC-LP-A2-01A R21-FAN-FR-AHU2B R21-FAN-FR-10B R21-FAN-FR-11B R21-FAN-FR-12B R21-MOD-CC-1B	DG-A NORMAL VENTILATION FAN AIR HANDLING UNIT BLOWER/VENTILATION FAN BLOWER/VENTILATION FAN BLOWER/VENTILATION FAN MOTOR OPERATED DAMPER 1A MOTOR OPERATED DAMPER 2A MOTOR OPERATED DAMPER 3A MOTOR OPERATED DAMPER 4A MOTOR OPERATED DAMPER 5A MOTOR OPERATED DAMPER 6A 480 VAC BUS A2-01A

Table 20.5-1

Example RTNSS Functions, Fault Tree Logic, and Components

System/ Subsystem	RTNSS Functions	Fault Tree Logic ID	Basic Event(s)	Component(s)
				BLOWER/VENTILATION FAN BLOWER/VENTILATION FAN BLOWER/VENTILATION FAN BLOWER/VENTILATION FAN MOTOR-OPERATED DAMPER 1B
EB HVAC			R21-MOD-CC-2B R21-MOD-CC-3B R21-MOD-CC-4B R21-MOD-CC-5B R21-MOD-CC-6B R21-AHU-FR-3B R12-BAC-LP-B2-01B	MOTOR-OPERATED DAMPER 2B MOTOR-OPERATED DAMPER 3B MOTOR-OPERATED DAMPER 4B MOTOR-OPERATED DAMPER 5B MOTOR-OPERATED DAMPER 6B AIR HANDLING UNIT 480 VAC BUS B2-01B
FAPCS	Suppression pool cooling and low pressure coolant injection modes. (Non-seismic PRA sequences.) WS-TOPSPC, FAPCS SUPPRESSION POOL COOLING	G21-FDSPA, FAPCS SPC INJECTION TRAIN A G21-TRA-RUNN, TRAIN A G21-FDSPB, FAPCS SPC INJECTION TRAIN B	G21-UV_-CC-F307A G21-NMO-CC-F306A G21_P21-ARUN G21-FT_-NO-N014A G21-PT_-NO-N002A G21-MOV-OO-F008A G21-MOV-OO-F003A G21-MOV-CC-F011A G21-MOV-CC-F013A G21-MOV-CC-F014A G21-UV_-OC-F004A G21-MP_-FR-C001A G21-UV_-CC-F307B	CHECK VALVE F307A NITROGEN MOTOR OPERATED VALVE F306A SEE RCCWS SECTION BELOW DISCHARGE FLOW TRANSMITTER SUCTION PRESSURE TRANSMITTER MOTOR OPER. VALVE F008A MOTOR OPERATED VALVE F003A MOTOR OPER. VALVE F011A MOTOR OPER. VALVE

Table 20.5-1

Example RTNSS Functions, Fault Tree Logic, and Components

System/ Subsystem	RTNSS Functions	Fault Tree Logic ID	Basic Event(s)	Component(s)
		G21-BRUN, TRAIN B	G21-NMO-CC-F306B G21_P21-BRUN G21-FT_-NO-N014B G21-PT_-NO-N002B G21-MOV-OO-F008B G21-MOV-OO-F003B G21-MOV-CC-F011B G21-MOV-CC-F013B G21-MOV-CC-F014B G21-UV_-OC-F004B G21-MP_-FR-C001B	F013A MOTOR OPER. VALVE F014A CHECK VALVE F004A MOTOR-DRIVEN PUMP C001A CHECK VALVE F307B NITROGEN MOTOR OPERATED VALVE F306B SEE RCCWS SECTION BELOW DISCHARGE FLOW TRANSMITTER SUCTION PRESSURE TRANSMITTER MOTOR OPER. VALVE F008B MOTOR OPERATED VALVE F003B MOTOR OPER. VALVE F011B MOTOR OPER. VALVE F013B MOTOR OPER. VALVE F014B CHECK VALVE F004B MOTOR-DRIVEN PUMP C001B
FAPCS	VL-TOPINJL, FAPCS LPCI OP. MODE	In addition to G21-TRA-RUNN and G21-BRUN above G21-RPV-INJ, FLOW DISCHARGE INTOTHE RPV (VIA FW ANDRWCU LINES) FAILS	B21-UV_-CC-F102A B21-UV_-CC-F103A G21-NMO-CC-F332A	CHECK VALVE F102A IN FEEDWATER LINE A CHECK VALVE F103A IN

Table 20.5-1

Example RTNSS Functions, Fault Tree Logic, and Components

System/ Subsystem	RTNSS Functions	Fault Tree Logic ID	Basic Event(s)	Component(s)
			G21-NMO-CC-F332B G21-UV_-CC-F333A G21-UV_-CC-F333B G21-UV_-CC-F331A G21-UV_-CC-F331B G21-UV_-CC-F348A G21-UV_-CC-F348B T23-POL-RP-SP G21-NMO-CC-F321A G21-NMO-CC-F321B G21-NMO-CC-F3222A G21-NMO-CC-F322B B21-LT_-NO-N001A B21-LT_-NO-N001B B21-LT_-NO-N001C B21-LT_-NO-N001D G21-BV_-OC-F320	FEEDWATER LINE A NITROGEN MOTOR OPERATED VALVE F332A NITROGEN MOTOR OPERATED VALVE F332B CHECK VALVE F333A CHECK VALVE F333B CHECK VALVE F331A CHECK VALVE F331B CHECK VALVE F348A CHECK VALVE F348B SUPPRESSION POOL NITROGEN MOTOR OPERATED VALVE F321A NITROGEN MOTOR OPERATED VALVE F321B NITROGEN MOTOR OPERATED VALVE F322A NITROGEN MOTOR OPERATED VALVE F322B SP LEVEL TRANSMITTER NOO1A SP LEVEL TRANSMITTER NOO1B SP LEVEL TRANSMITTER NOO1C SP LEVEL TRANSMITTER NOO1D MANUAL VALVE F320
FB HVAC	Provide cooling support for FAPCS.			
PSW	Provide cooling	P41-0070-_1, PSW PUMP 1A	P41-SYS-FC-HVACPSW-A	PSW-A ROOM COOLING MOTOR DRIVEN PUMP

Table 20.5-1

Example RTNSS Functions, Fault Tree Logic, and Components

System/ Subsystem	RTNSS Functions	Fault Tree Logic ID	Basic Event(s)	Component(s)
	support for FAPCS P41-0002-_2, INSUFFICIENT FLOW FROM PSW PUMPS		P41-0074-_1 P41-MOV-OC-PMPF002A P41-0077-_1 R11-BAC-LP-100A3 P41-0075-_1	C001A MOTOR OPERATED VALVE MV-F002A STRAINER P41-D001A 6.9 KV AC PIP-A LOADS BUS 1000A3 CHECK VALVE F001A
PSW		P41-0091-_2, PSW PUMP 2A P41-0070-_3, PSW PUMP 1B P41-0091-_4, PSW PUMP 2B	P41-SYS-FC-HVACPSW-A P41-0074-_2 P41-MOV-OC-PMPF004A P41-0077-_2 R11-BAC-LP-100A3 P41-0075-_2 P41-SYS-FC-HVACPSW-B P41-0074-_3 P41-MOV-OC-PMPF002B P41-0077-_3 R11-BAC-LP-100B3 P41-0075-_3 P41-SYS-FC-HVACPSW-B P41-0074-_4 P41-MOV-OC-PMPF004B P41-0077-_4 R11-BAC-LP-100B3 P41-0075-_4	PSW-A ROOM COOLING MOTOR DRIVEN PUMP C002A MOTOR OPERATED VALVE MV-F004A STRAINER P41-D002A 6.9 KV AC PIP-A LOADS BUS 1000A3 CHECK VALVE F003A PSW-B ROOM COOLING MOTOR DRIVEN PUMP C001B MOTOR OPERATED VALVE MV-F002B STRAINER P41-D001B 6.9 KV AC PIP-A LOADS BUS 1000B3 CHECK VALVE F001B PSW-B ROOM COOLING MOTOR-DRIVEN PUMP C002B

Table 20.5-1

Example RTNSS Functions, Fault Tree Logic, and Components

System/ Subsystem	RTNSS Functions	Fault Tree Logic ID	Basic Event(s)	Component(s)
				MOTOR OPERATED VALVE MV-F004B STRAINER P41-D002B 6.9 KV AC PIP-A LOADS BUS 1000B3 CHECK VALVE F003B
RCCWS	Provide cooling support for FAPCS.	G21_P21-ARUN, RCCWS FAIL TO COOL FAPCS	G21-HX_-LK-B001A G21-MOV-OC-F046A G21-MOV-OC-F047A G21-MOV-CO-F048A P21-MOV-OC-F0010A1 P41-ACV-OC-F002A P41-MOV-OC-F003A P41-ACV-OC-F009A P21-ACV-CO-F016A P21-ACV-OC-F012A	HEAT EXCHANGER B001A MOTOR OPERATED VALVE P21-F046A MOTOR OPERATED VALVE P21-F047A MOTOR OPERATED VALVE P21-N048A MOTOR OPERATED VALVE F0010A1 AIR OPERATED VALVE MV-F002A MOTOR OPERATED VALVE F003A AIR OPERATED VALVE MV-F009A AIR OPERATED VALVE F016A AIR OPERATED VALVE F012A
RCCWS		G21_P21-RUNN, RCCWS FAIL TO COOL FAPCS	P21-HX_-LK-B001B G21-MOV-OC-F046B G21-MOV-OC-F047B G21-MOV-CO-F048B P21-MOV-OC-F0010B1 P41-ACV-OC-F002B P41-MOV-OC-F003B P41-ACV-OC-F009B	HEAT EXCHANGER B001B MOTOR OPERATED VALVE P21-F046B MOTOR OPERATED VALVE P21-F047B MOTOR OPERATED VALVE P21-N048B MOTOR OPERATED VALVE F0010B1 AIR OPERATED VALVE MV-

Table 20.5-1

Example RTNSS Functions, Fault Tree Logic, and Components

System/ Subsystem	RTNSS Functions	Fault Tree Logic ID	Basic Event(s)	Component(s)
			P21-ACV-CO-F016B P21-ACV-OC-F012B	F002B MOTOR OPERATED VALVE MV-F003B AIR OPERATED VALVE MV-F009B AIR OPERATED VALVE F016B AIR OPERATED VALVE F012B
TB HVAC	Provide room cooling for RCCW pumps.	P21-HVACRCCWAFTR, FAILURE OF RCCW ROOM A FCU TO RUN P21-HVACRCCWBFTR, FAILURE OF RCCW ROOM B FCU TO RUN	P21-AHU-FR-RCCWA R12-BAC-LP-TB1-A NICWSA-SYS-FAILS P21-AHU-FR-RCCWB R12-BAC-LP-TB1-B NICWSB-SYS-FAILS	AIR HANDLING UNIT RCCWS ROOM A 480 VAC TURBINE BLDG POWER CENTER 1-A NUCLEAR ISLAND CHILLED WATER SUBSYSTEM TRAIN A AIR HANDLING UNIT RCCWS ROOM TRAIN B 480 VAC TURBINE BLDG POWER CENTER 1-B NUCLEAR ISLAND CHILLED WATER SUBSYSTEM TRAIN B
PIP Buses	Provide post 72-hour AC power from standby diesel generators to support Post-Accident Monitoring, and FAPCS.	Not modeled		
RCCWS	Provide post 72-hour	Not modeled		

Table 20.5-1

Example RTNSS Functions, Fault Tree Logic, and Components

System/ Subsystem	RTNSS Functions	Fault Tree Logic ID	Basic Event(s)	Component(s)
	cooling for Chillers and DGs.			
PCS/ICCS				
Diesel Makeup Pump	Provide post 72-hour refill to PC/ICC and Spent Fuel pools. FPS-MKUP, MAKEUP FROM FPS FAILS	FPS-P1A, MAKE UP FROM PRIMARY FPS DIESEL PUMP TRAIN FAILS FPS-P2A, MAKE UP FROM SECONDARY FPS DIESEL DRIVEN PUMP FAILS	U43-EDP-FR-P1A U43-TNK-RP-TNK3 U43-UV_-CC-FU432A U43-UV_-CC-FU431A U43-TNK-RP-T1A U43-EDP-FR-P2A U43-TNK-RP-TNK4 U43-UV_-CC-FU43TB U43-UV_-CC-FU433A U43-TNK-RP-MKUP	DIESEL-DRIVEN PUMP P1A PRIMARY DIESEL FUEL TANK P1A FIRE HEADER CHECK VALVE PUMP P1A DISCHARGE CHECK VALVE PRIMARY TANK 1A DIESEL-DRIVEN PUMP 2A SECONDARY DIESEL FUEL TANK SECONDARY FPS HEADER CHECK VALVE PUMP DISCHARGE CHECK VALVE MAKEUP WATER
External Connection	Provide post 7-day refill to PC/ICC and Spent Fuel pools. U43-ICPCCS, INJECTION INTO IC/PCCS POOL FAILS	FPS-2ND, SECONDARY LINE TO REACTOR BUILDING FAILS FPS-PCCSA, TRAIN A FPS TO IC/PCCS FAILURE FPS-PCCSB, TRAIN B FPS TO IC/PCCS FAILURE	U43-UV_-CC-FU436 U43-BV_-CC-FU437 U43-UV_-CC-FU434A G21-UV_-CC-F427A U43-BV_-CC-F426A U43-BV_-CC-FU435A U43-UV_-CC-FU434B G21-UV_-CC-F427B U43-BV_-CC-F426B	CHECK VALVE MANUAL VALVE CHECK VALVE F434A CHECK VALVE F427A MANUAL VALVE F426A MANUAL VALVE F435A CHECK VALVE F434B CHECK VALVE F427B MANUAL VALVE F426B

Table 20.5-1

Example RTNSS Functions, Fault Tree Logic, and Components

System/ Subsystem	RTNSS Functions	Fault Tree Logic ID	Basic Event(s)	Component(s)
			U43-BV_-CC-FU435B	MANUAL VALVE F435B
Post Accident Monitoring				
Diesel Generator	Provide power for post accident monitoring	Not modeled		
PAM Instruments (DCIS)	Provide post accident monitoring	Not modeled		
PIP Buses	Provide post 72-hour AC power from standby diesel generators to support Post-Accident Monitoring, and FAPCS.	Not modeled		
RCCWS	Provide post 72-hour cooling for Chillers and DGs.	Not modeled		