mineral exploration (SDCL 45-6C-11) and uranium exploration (SDCL 45-6D-14). Under SDCL 45-6C-11 and SDCL 45-6D-14, restrictions concerning disturbances to cultural resource sites were imposed by the South Dakota State Historical Society Archaeological Research Center (SARC), Rapid City, South Dakota. In compliance with these restrictions, Powertech contracted with ALAC to conduct a Level III survey of all proposed high-priority exploratory drill areas within the APE.

Powertech additionally requested that ALAC conduct Level III cultural resource evaluations of all remaining portions of the APE. The Level III investigation results will be incorporated in Powertech's request to the South Dakota Department of Environment and Natural Resources, Minerals and Mining Program, for a determination with regard to Special, Exceptional, Critical or Unique Lands. This project is also a federal 'undertaking' that falls under the Section 106 process of the National Historic Preservation Act (NHPA) of 1966, as amended (36 CFR PART 800) (Advisory Council on Historic Preservation [ACHP] 2006). The lead federal agency is the Nuclear Regulatory Commission (NRC). This report is intended to satisfy requirements for documenting cultural resources in a manner pursuant to both 36 CFR PART 800 and the established specifications for review and compliance within South Dakota (South Dakota State Historic Preservation Office [SHPO] 2005).

The primary objectives of this investigation were the identification and documentation of all cultural resources within the APE, and the preliminary evaluation of the eligibility status of each property for listing on the National Register of Historic Places (NRHP). Documented cultural properties were also evaluated in terms of the effect of such an undertaking on the resources, and management recommendations have been provided accordingly. ALAC documented 161 previously unrecorded archeological sites and revisited 29 previously recorded sites during the current investigation. In addition, six previously unrecorded historic structures were documented during the current investigation.

1.2 PROJECT AREA OF POTENTIAL EFFECT

The APE is defined as all potential work areas, including proposed drill sites, access roads, and additional facility sites, comprising the Dewey-Burdock Uranium Project. The APE is located in the westernmost portions of Custer and Fall River counties (Figure 1.2) within the confines of the Black Hills Archaeological Region as defined by the *South Dakota State Plan for Archaeological Resources* (Winham and Hannus 1991).

Of the 10,310.97 ac (4,172.70 ha) of land examined during the current investigation, approximately 5,105.32 ac (2,066.05 ha) are located in Custer County, and 5,205.65 ac (2,106.65 ha) are located in Fall River County. The United States Department of the Interior, Bureau of Land Management (BLM) owns 242 ac (97.93 ha) of the land investigated (see Appendix D, Figure D-3). These federal lands were investigated under Archaeological Resources Protection Act (ARPA) permit number M 94566. All remaining land parcels investigated during this survey are privately owned. In all instances, Powertech personnel were responsible for obtaining landowner access permission for ALAC prior to field investigations.

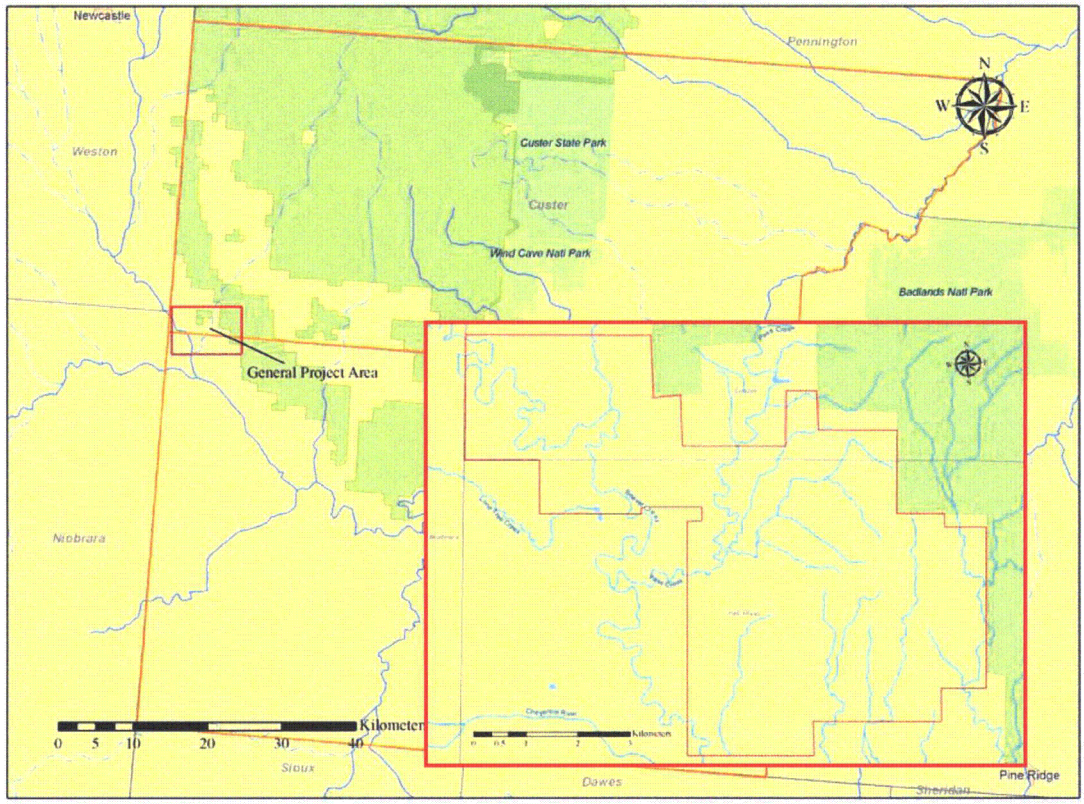

Figure 1.2. General location and enlarged inset of the proposed Dewey-Burdock Uranium Project survey area, Custer and Fall River counties, South Dakota (adapted from ESRI ArcGIS 9 United States Data and Maps Media Kit 2005).

1.3 PERSONNEL AND PROCEDURES

L. Adrien Hannus, Ph.D., served as Principal Investigator (PI) for this investigation, overseeing all aspects of the various project phases. Timothy V. Gillen and Jason M. Kruse served as project Field Directors. The field crew was composed of Carleton A. Bates, Andrew Ericson, Edward Fosha, Alvin Grassrope, Jessica Kleinschmidt, Elizabeth Kunkel, Linda Palmer, Laci Paul, William H. Ranney, Juanita Short, and Kayla Wiechmann. The Trimble Global Positioning System (GPS) was operated by Carleton Bates, Timothy Gillen, Jason Kruse, and William Ranney. Jason Kruse produced site maps for the report. John R. Bozell analyzed the collected artifacts. Technical and scientific editing of this report was conducted by Lynette Rossum and Linda Palmer. Contributing authors include Austin A. Buhta, John Bozell, Timothy Gillen, Jason Kruse, and Linda Palmer.

1.4 REPORT FRAMEWORK AND ORGANIZATION

This report comprises five separate volumes. Volumes I, II, and III contain the cultural resources report, and Volumes IV and V contain the Appendices.

1.4.1 Cultural Resources Report (Volumes I-III)

Volumes I, II, and III contain the cultural resources report in the form of eight chapters. A brief synopsis of each chapter is provided below:

- **Chapter 1** presents a general study overview, including the description and objectives of the investigation; demarcation of the project area; roles of personnel involved; and description of the framework and organization of the report [Austin A. Buhta].

- **Chapter 2** provides the environmental context of the project area. Topics addressed are the landscape composition; regional climate and ecology; and the paleoenvironment [Austin A. Buhta].

- **Chapter 3** details the cultural context of the project region. Descriptive overviews are provided of the various cultural groups known to have inhabited the region through time, beginning with Paleoindian cultures and concluding with the present inhabitants of the region [Austin A. Buhta].

- **Chapter 4** outlines the research design and methodology utilized throughout the investigation. An overview and evaluation of previous cultural resources work within the project area is presented. Research requirements for the investigation are then defined. The chapter concludes with a description of the methodology and implementation of fieldwork and laboratory procedures [Austin A. Buhta and John R. Bozell].

- **Chapters 5 and 6** present a description of the cultural resources recorded during field investigations in Custer and Fall River counties, respectively. Descriptions of site locales, survey results, and artifact descriptions are presented. The current NRHP eligibility status of each site is then discussed, and recommendations are provided. Documentation for each site includes maps and overview photographs, artifact and material type inventories and analysis, and photographs of additional site features/diagnostic artifact material recorded [Austin A. Buhta, John R. Bozell, Timothy V. Gillen, Jason M. Kruse, and Linda Palmer].

- **Chapter 7** presents a discussion and evaluation of the research results, and management recommendations for each site documented [Austin A. Buhta and John R. Bozell].

- **Chapter 8** provides a list of reference material cited throughout the body of the report.

1.4.2 Appendices (Volumes IV and V)

Volumes IV and V consist of the relevant documents appended to the cultural resources report. Specific site locational data (e.g., maps and site forms) have been included in a separate appendix as they contain sensitive information considered inappropriate for public dissemination. These documents have been segregated into six separate appendices labeled *A-F*:

- **Appendix A** Archeological Site Forms
- **Appendix B** Historic Structure Survey Forms
- **Appendix C** National Archaeological Database (NADB) Form
- **Appendix D** Topographic Site Location Maps
- **Appendix E** Artifact Catalog and Lithic Tool Measurement Data
- **Appendix F** Project Scope-of-Work

CHAPTER 2: ENVIRONMENTAL CONTEXT

The following chapter presents a brief, generalized description of the environmental parameters for that portion of southwestern South Dakota comprising the southern Black Hills and plains periphery. The landscape setting of the project area is addressed initially, including its physiographic (geomorphologic), geologic, and hydrographic structures. A description of prevalent regional climatic patterns and an overview of the current ecological framework are then provided. The chapter concludes with an examination of the paleoenvironmental composition of the region in an attempt to establish a more viable context in which the cultural resources observed in this study might be evaluated.

2.1 LANDSCAPE COMPOSITION

2.1.1 Black Hills Physiography

The proposed project area is located within portions of Custer and Fall River counties in southwestern South Dakota. The APE is situated within the Black Hills division of the Unglaciated Missouri Plateau of the Great Plains physiographic province (Malo 1997; South Dakota Geological Survey [SDGS] 1964; United States Geological Survey [USGS] 2003; Winham and Hannus 1991:28-2) (Figure 2.1).

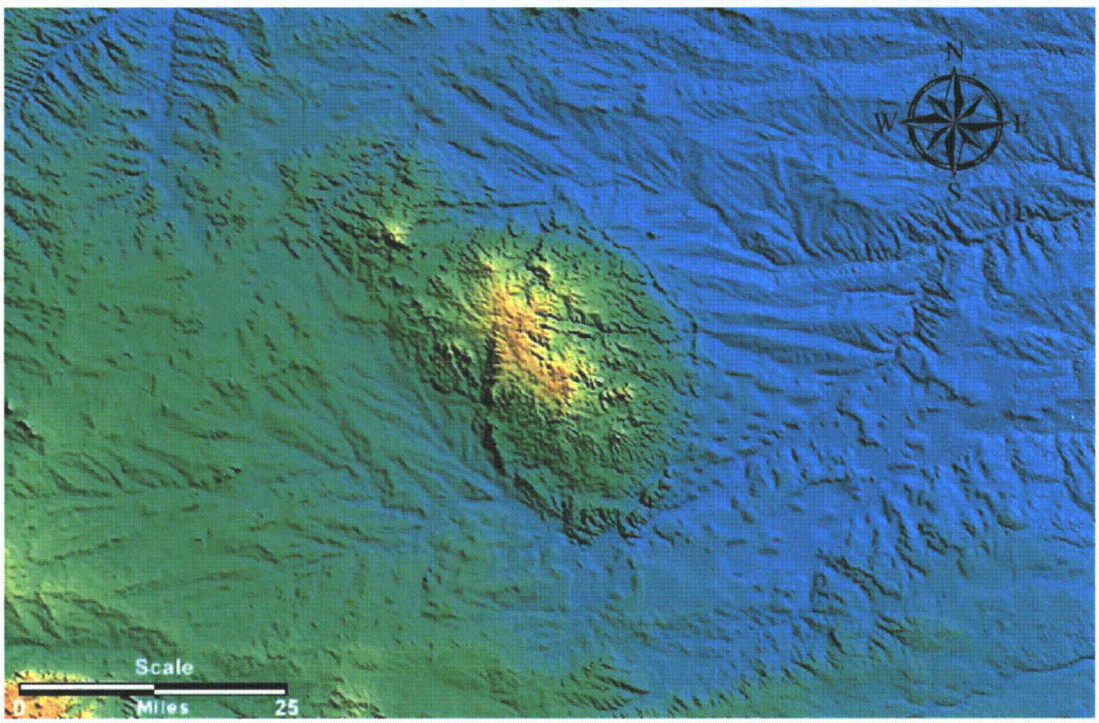

Figure 2.1. Digital relief image of the Black Hills uplift amidst the surrounding plains (adapted from Geoinformatics Lab, San Diego Supercomputer Center, University of California, San Diego © 2006).

The Black Hills physiographic division is described as a mountainous region comprised of a series of concentric, upturned sedimentary strata surrounding a core of igneous and metamorphic rock (Feldmann and Heimlich 1980:7-11; Froiland 1978:11-18; Malo 1997). The Black Hills are an elliptically-shaped uplift encompassing approximately 6,000 square mi (15,539 square km) of surface area (Froiland 1978:11; Lippincott 1996:4). However, the currently proposed project area is located only within the southern portion of the Black Hills in southwestern South Dakota. Typical elevations in this area of the Black Hills range between approximately 3,000 and 4,848 ft (914-1,478 m) above the National Geodetic Vertical Datum of 1929 (Kalvels 1982:2).

2.1.2 Black Hills Geology

The extensive history of the Black Hills is observable in its oldest rock formations (Figure 2.2), which have been dated to an age approaching 2.5 billion years before present (B.P.) (Froiland 1978:20-22; Lippincott 1996:4). The geology of the Black Hills is largely the result of separate, definable formation episodes that are well-reflected in the present composition of the region (Table 2.1).

The interior core, comprised primarily of Precambrian metamorphic rock, gneiss, slate, and schist, was produced first. Periodic episodes of folding and faulting, coupled with multiple igneous intrusions and interspersed erosional sequences, have aided in the production of the interior core through time (Lippincott 1996:4; Molyneaux et al. 2000:2-1).

Following the formation of the core, the Black Hills area remained part of a vast plain situated topographically at, or slightly below, sea level (Gries 1998:214). Over time, intruding and receding shallow seas deposited successive layers of sediment which, through the process of induration, formed the limestones, sandstones, and shales that prevail throughout the region (see Figure 2.2). An estimated 7,500 ft (2,286 m) of deposits had accumulated throughout this portion of the plains by the end of the Cretaceous period (Gries 1998:214; Lippincott 1996:4).

Approximately 62 million years B.P., a major tectonic uplift began to raise the metamorphic rocks and granites of the Black Hills central core region above the surrounding landscape. This uplift, which was also responsible for the formation of the mountain ranges of central Montana and Wyoming (Gries 1998:214), exposed these older rock formations to an increased array of erosional mechanisms (Lippincott 1996:4). Wind and water, the primary mechanisms of erosion, sculpted the remaining landscape of the Black Hills (see Figure 2.2) during the warmer and wetter Paleocene/Eocene transition period approximately 55-50 million years B.P. (Gries 1998:217; Trimble 1980:5).

Today, the central core of the Black Hills is surrounded by marine sedimentary rocks and limestone distributed in a prominent series of concentric belts (Trimble 1980:8; see Figure 2.2). This area has been referred to as the Limestone Plateau (Froiland 1978:11). Surrounding the Limestone Plateau is a well-defined, continuous valley cut into the soft, red shale referred to as the Red Valley (Froiland 1978:11; Trimble 1980:8). Surrounding the Red Valley is a final, prominent landform referred to as the Hogback Ridge (Froiland 1978:11). Formed from layers of more resilient sandstones and orthoquartzites, the Hogback Ridge stands

approximately 328-656 ft (100-200 m) above its immediate surroundings, and comprises the outermost boundary between the Black Hills and the surrounding plains of the Missouri Plateau (Lippincott 1996:4-5; Trimble 1980:8).

Table 2.1. Generalized Geologic Sequence of the Black Hills and Missouri Plateau (adapted from Trimble 1980).

Geologic Age		**Millions of Years Before Present (B.P.)**	**Geologic Description**
Quaternary	Pleistocene	0-2	Glacial deposits, alluvium, and terrace deposits (erosional surface)
Tertiary	Pliocene	2-5	Flaxville Gravel and Ogallala Formation
	Miocene	5-23	Arikaree Formation (erosional surface)
	Oligocene	23-37	White River Group
	Eocene	37-53	(erosional surface) Wasatch Formation; Golden Valley Formation
	Paleocene	53-65	Fort Union Formation
Cretaceous		65-136	Hell Creek Formation; Lance Formation; Fox Hills Sandstone
			Late Cretaceous sea deposits (shales/sandstones/limestones)
			Dakota Sandstone; Lakota Formation
Jurassic		136-190	Sundance Formation; Ellis Group; Unkpapa Sandstone
Triassic		190-225	Dominantly red rocks
Paleozoic		225-570	Paleozoic rocks, undivided
Precambrian		570-	Precambrian rocks, undivided

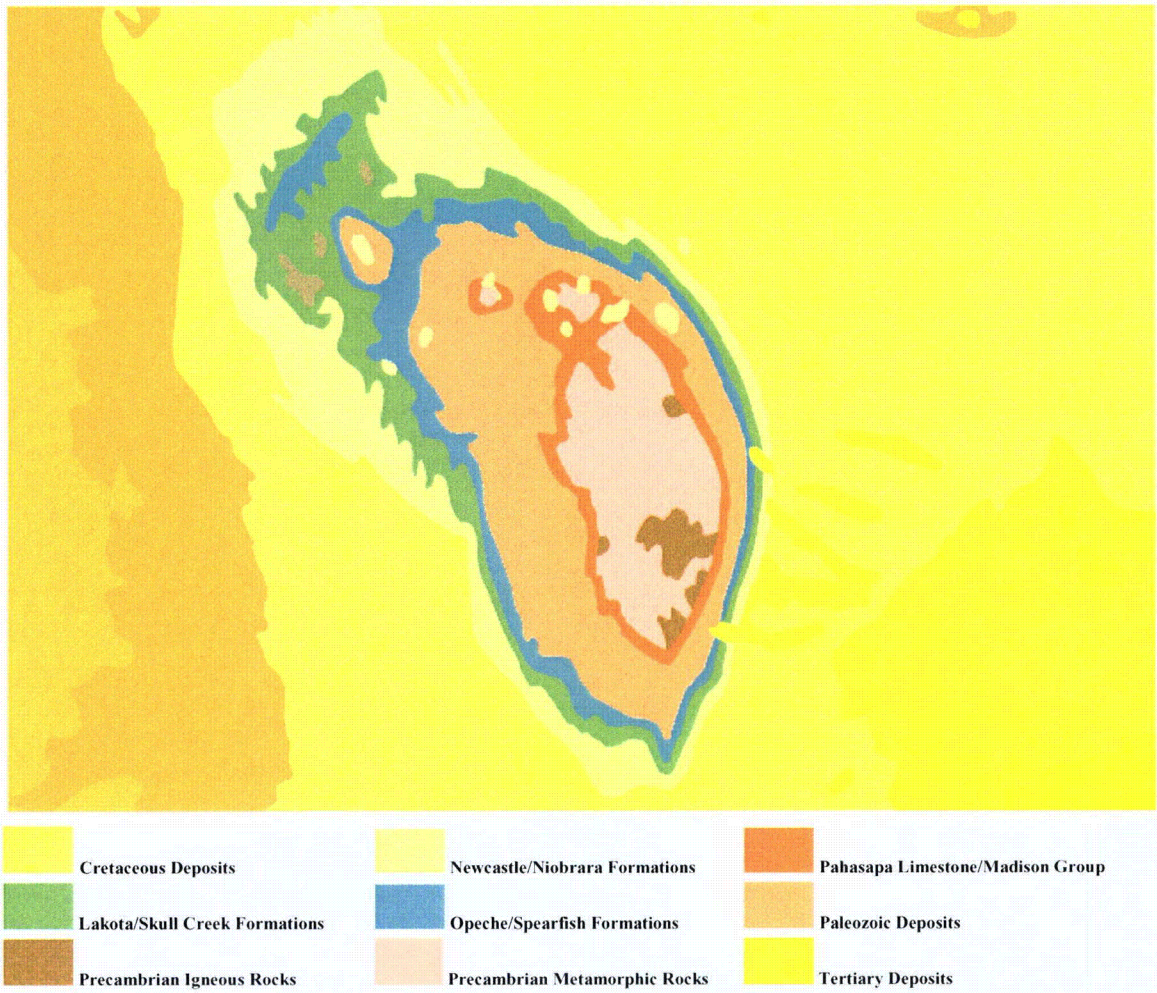

Figure 2.2. Generalized model depicting the geologic composition of the Black Hills and surrounding region (adapted from Geoinformatics Lab, San Diego Supercomputer Center, University of California, San Diego © 2006; and SDGS 2004).

2.1.3 Pedology

Soil is cited as being the most important available natural resource in Custer and Fall River counties, providing a growing medium for both the crops raised there and the grasses used in livestock grazing (Ensz 1990:4; Kalvels 1982:3). Archeologically, the significance of these soils lies in their stability (i.e., their ability to resist the various mechanisms of erosion), which directly correlates with the ability of a given soil to successfully preserve the integrity of any potential archeological sites (Lippincott 1996:6).

Seven major soil associations are represented within the proposed project area in Custer and Fall River counties. Major soil associations encountered in Custer County include the Canyon-Rockoa-Rock Outcrop Association and the Grummit-Arvada Association (Ensz 1990:7-13). Major soil associations encountered in Fall River County include the Dailey-Ascalon, Glenberg-Bankard, Minnequa-Grummit, Norka, and Mathias-Butche-Rockoa

associations (Kalvels 1982:5-12). Table 2.2 highlights the major soil associations within the project area and provides a brief description of each.

Table 2.2. Major Soil Associations Located within the Project Area.

Soil Association	County Location	General Description	Active Erosion
Canyon-Rockoa-Rock Outcrop	Custer	Rock outcrop and shallow and deep, well-drained, gently sloping to very steep, loamy soils formed in material weathered from interbedded limestone, sandstone, and shale; on uplands and mountains (Ensz 1990:7).	Yes
Grummit-Arvada	Custer	Shallow and deep, well-drained, nearly level to very steep, clayey and loamy soils formed in material weathered from acid shale and sedimentary rock; on uplands (Ensz 1990:13).	Yes
Mathias-Butche-Rockoa	Fall River	Deep and shallow, well-drained, gently sloping to very steep, stony and loamy soils on mountains and uplands (Kalvels 1982:5).	Yes
Dailey-Ascalon	Fall River	Deep, somewhat excessively drained and well-drained, nearly level to strongly sloping, sandy and loamy soils on uplands (Kalvels 1982:8-9).	Yes
Glenberg-Bankard	Fall River	Deep, well-drained and somewhat excessively drained, nearly level, loamy soils on floodplains (Kalvels 1982:12).	No
Minnequa-Grummit	Fall River	Moderately deep and shallow, well-drained, gently sloping to steep, silty and clayey soils on uplands (Kalvels 1982:11-12).	Yes
Norka	Fall River	Deep, well-drained, nearly level to moderately sloping, silty soils on uplands (Kalvels 1982:8).	Yes

2.1.4 Hydrography

The regional drainage patterns generally trend to the east as the Northern Plains slope gently away from the Rocky Mountain and Black Hills uplifts (Molyneaux et al. 2000:2-1). The softer sedimentary deposits lying atop the Pierre shale in the surrounding plains have, in most cases, offered little resistance to the erosive power of the rivers and streams in the region since the onset of their eastward-trending drainage pattern (Molyneaux et al. 2000:2-1). As a

result, many of the drainageways dissecting the surrounding plains are deeply-entrenched and possess steep, eroding embankments (Winham and Hannus 1991:28-2).

The Cheyenne River (USGS Hydrologic Unit No. 101201 [USGS 2007]) and its tributaries are responsible for draining the majority of Custer and Fall River counties (Ensz 1990:3; Kalvels 1982:2), and comprise the primary drainage system within the APE (Figure 2.3). Major tributaries to the Cheyenne River in Custer and Pennington counties include Battle, Beaver, Boxelder, Bull, Deep, French, Pass, Pleasant Valley, Rapid, and Spring creeks (Ensz 1990:2-3). Tributaries to the Cheyenne River in Fall River County include Alum, Beaver, Dry, Elm, Hat, Horsehead, Moss Agate, Plum, Plumb, Sand, and Teepee creeks, and Fall River (Kalvels 1982:General Soils Map). The Cheyenne River, Beaver Creek, and Pass Creek comprise the three primary drainageways within the immediate confines of the APE.

Figure 2.3. Overview of the Beaver Creek valley in southwestern Custer County, west-southwestern orientation.

2.2 REGIONAL CLIMATE

The climate within the project area is exclusively continental and subhumid, characterized largely by dramatic shifting of seasonal weather patterns, light levels of precipitation, and extensive wind action. Cold winters and hot, dry summers define the extremes of temperature

variation, with records ranging between 114° and -43° Fahrenheit (45.56° and -41.67° centigrade) (Ensz 1990:2; Kalvels 1982:1-2).

Annual precipitation within the Black Hills of Custer County averages 18 in (45.72 cm). Approximately 75 percent of this amount occurs between the months of April and September in the form of rain (Ensz 1990:2). Annual precipitation within Fall River County averages 16.46 in (41.81 cm). Approximately 78 percent of this amount occurs between the months of April and September in the form of rain (Kalvels 1982:2).

Relative humidity averages approximately 50 percent during mid-afternoon throughout the region, and reaches its highest level (approximately 70 percent) at dawn. During summer, the sun shines approximately 70 percent of the time. In winter, the sun shines approximately 55 percent of the time. Prevailing regional winds arise from the north-northwest, with average high speeds peaking during the spring at approximately 13 miles per hour (20.92 kilometers per hour) (Ensz 1990:2; Kalvels 1982:2).

Additional weather extremes are relatively common throughout the region. Thunderstorms occur approximately 42 days per year, and tornadoes and severe thunderstorms also occur occasionally in the spring and summer. Blizzards are occasional occurrences during the winter months, and hail storms have been known to occur during the warmer months of the year (Ensz 1990:2; Kalvels 1982:2).

2.3 ECOSYSTEMS

The proposed project area is located within portions of the Northwestern Great Plains and Middle Rockies Level III ecoregions as defined by the United States Geological Survey (USGS 1998). The Middle Rockies Ecoregion is further subdivided into three smaller, Level IV ecoregions within South Dakota, while the Northwestern Great Plains is subdivided into 11 such areas. Portions of the proposed project area are located within two of these Level IV ecoregions, defined as the Black Hills Foothills and the Sagebrush Steppe (USGS 1998). Table 2.3 briefly describes the Level IV ecoregions within the proposed project area.

Table 2.3. Ecoregions Comprising the Proposed Project Area.

Level III Ecoregion	Level IV Ecoregion	Level IV Ecoregion Description
Northwestern Great Plains	Sagebrush Steppe	Arid region located in the southwest corner of the project area. This region is characterized by eroded buttes, badlands, scoria mounds and salt pans scattered throughout a mat of shortgrass prairie and sagebrush. Low human populations and abundant wildlife exist here [USGS 1998].
Middle Rockies	Black Hills Foothills	The Hogback Ridge and Red Valley comprise this region. The outer hogback forms a concentric ring around the Red Valley, which in turn forms a concentric ring around the core of the Black Hills uplift. Ponderosa pine forests dominate the crest of the hogback and interior foothills [USGS 1998].

2.3.1 Flora

The native floral community of the surrounding Northwestern Great Plains is composed of various forb and shrub species sparsely interspersed across a landscape dominated by an amalgamation of short and mixed-grasses. Tree distribution throughout the majority of this region is typically sparse (Lippincott 1996:7; Molyneaux et al. 2000:2-7). Exceptions include riparian environments and the areas extending into the southern foothills of the Black Hills (Figure 2.4). Tree distribution is significantly more concentrated in these areas. Table 2.4 lists the most common flora in the southern Black Hills periphery, Table 2.5 lists the most common species of grassland flora, and Table 2.6 lists the most common riparian flora throughout the region.

Figure 2.4. Variation in regional floral communities depicting the ponderosa pines of the Black Hills in the foreground transitioning into the shortgrass species that extend outward onto the plains, southern orientation.

Table 2.4. Common Black Hills Flora within the Project Region (Larson and Johnson 1999).

Flora Type	Common Name	Scientific Name
Grass Species	Western Wheatgrass	*Agropyron smithii*
	Little Bluestem	*Andropogon scoparius*
	Buffalograss	*Buchloe dactyloides*
Tree Species	Ponderosa Pine	*Pinus ponderosa*

Table 2.4 (continued).

Flora Type	Common Name	Scientific Name
Tree Species	Rocky Mountain Juniper	*Juniperus scopulorum*
Forb Species	Yucca	*Yucca glauca*
	Pasture Sagebrush	*Artemisia frigida*
	Sand Lily	*Leucocrinum montanum*
	Rubber Rabbitbrush	*Chrysothamnus nauseosus*
	Big Sagebrush	*Artemisia tridentata*

Table 2.5. Common Grassland Flora within the General Project Region (Johnson and Larson 1999; Molyneaux et al. 2000:2-7 and 2-8).

Flora Type	Common Name	Scientific Name
Grass Species	Western Wheatgrass	*Agropyron smithii*
	Little Bluestem	*Andropogon scoparius*
	Side-oats Grama	*Bouteloua curtipendula*
	Blue Grama	*Bouteloua gracilis*
	Buffalograss	*Buchloe dactyloides*
	Sandreed	*Calamovilfa longifolia*
	Canada Wild Rye	*Elymus canadensis*
	Junegrass	*Koeleria pyramidata*
	Kentucky Bluegrass	*Poa pratensis*
	Sand Dropseed	*Sporobulus cryptandrus*
Forb Species	Textile Onion	*Allium textile*
	Lead Plant	*Amorpha canescens*
	Pasture Sagebrush	*Artemisia frigida*
	Showy Milkweed	*Asclepias speciosa*
	Yellow Primrose	*Calylophus serrulatus*
	Needleleaf Sedge	*Carex eleocharis*
	Threadleaf Sedge	*Carex filifolia*
	Indian Paintbrush	*Castilleja sessiliflora*
	Pincushion Cactus	*Coryphantha vivipara*
	Daisy Fleabane	*Erigeron strigosus*
	Yellow Umbrella Plant	*Erigonum flavum*
	Gumweed	*Grindelia squarrosa*
	Yellow Flax	*Linum rigiddum*

Table 2.5 (continued).

Flora Type	Common Name	Scientific Name
Forb Species	Fringed Puccoon	*Lithospermum incisum*
	White/Pink Biscuitroot	*Lomatium orientale*
	Prickly Pear Cactus	*Opuntia compressa*
	Purple Locoweed	*Oxytropis lambertii*
	White Beardtongue	*Penstemon albidus*
	Large Beardtongue	*Penstemon grandiflorus*
	Prairie Rose	*Rosa arkansana*
	Hoary Virvain	*Verbena stricta*
	Yellow Prairie Violet	*Viola nuttallii*

Table 2.6. Common Riparian Flora within the Project Region (Molyneaux et al. 2000:2-7 and 2-8).

Flora Type	Common Name	Scientific Name
Tree Species	Box Elder	*Acer negundo*
	Silver Maple	*Acer saccharinum*
	Russian Olive	*Elaeagnus angustifolia*
	Green Ash	*Fraxinus pennsylvanica*
	Cottonwood	*Populus deltoides*
	Burr Oak	*Quercus macrocarpa*
	Peach-leaved Willow	*Salix amygdaloides*
	Sandbar (Coyote) Willow	*Salix exigua*
	American Elm	*Ulmus americana*
Forb Species	Bittersweet	*Celastrus scandens*
	Virgin's Bower	*Clematais virginiana*
	Red Osier	*Cornus stolonifera*
	Woodbine	*Parthenocissus vitacea*
	Elderberry	*Sambucus canadensis*
	Buffaloberry	*Shpherdia argentea*
	Poison Ivy	*Toxicodendron rydbergii*
	River-bank Grape	*Vitis riparia*

2.3.2 Fauna

The settlement of southwestern South Dakota in the latter half of the nineteenth century initiated a process that dramatically altered the composition of faunal resources in the area. The introduction of livestock, incessant hunting practices, and conversion of land for crop production all played a role in this process. At the time of European contact, a variety of grazing and burrowing animals, and numerous bird species, occupied the southwestern region of South Dakota. A range of reptiles and arthropods also populated the region during the warmer months of the year, and a variety of aquatic species occupied the riverine habitats throughout the area (Molyneaux et al. 2000:2-8 and 2-9). Tables 2.7 and 2.8 outline some of the more prevalent faunal types currently associated with the habitats particular to the project region.

Table 2.7. Common Fauna Associated with the Grassland, Steppe, and Foothills Habitats in the Region (Hoffman and Jones 1970:364).

Taxonomic Class	Common Name	Scientific Name
Mammalia	White-tailed Deer	*Odocoileus virginianus*
	Mule Deer	*Odocoileus hemionus*
	White-tailed Jackrabbit	*Lepus townsendii*
	Spotted Skunk	*Spilogale putorius*
	Coyote	*Canis latrans*
	Bobcat	*Lynx rufus*
	Swift Fox	*Vulpes velox*
	Mountain Lion	*Felis concolor*
	Pronghorn	*Antilocapra americana*
	Black-tailed Prairie Dog	*Cynomys ludovicianus*
	Black-tailed Jackrabbit	*Lepus californicus*
	Black-footed Ferret	*Mustela nigripes*
	American Bison	*Bison bison*
	Franklin's Ground Squirrel	*Spermophilus franklinii*
	Thirteen-lined Ground Squirrel	*Spermophilus tridecemlineatus*
	Plains Pocket Gopher	*Geomys bursarius*
	Olive-backed Pocket Mouse	*Perognathus fasciatus*
	Plains Pocket Mouse	*Perognathus flavescens*
	Hispid Pocket Mouse	*Perognathus hispidus*
	American Badger	*Taxidea taxus*
	Prairie Vole	*Microtus ochrogaster*
Aves	Sharp-tailed Grouse	*Tympanuchus phasianellus*
	Ferruginous Hawk	*Buteo regalis*

Table 2.7 (continued).

Taxonomic Class	Common Name	Scientific Name
Aves	Golden Eagle	*Aquila chrysaetos*
	Sage Grouse	*Centrocercus urophasianus*
	Field Sparrow	*Spizella pusilla*
	Grey Partridge	*Perdix perdix*
	Mourning Dove	*Zenaida macroura*
	Black-billed Magpie	*Pica hudsonia*
	Horned Lark	*Eremophila alpestris*
	Western Meadowlark	*Sturnella neglecta*
	Lark Bunting	*Calamospiza melanocorys*
	Grasshopper Sparrow	*Ammodramus savannarum*
	Chestnut-collared Longspur	*Calcarius ornatus*
	Wild Turkey	*Meleagris gallopavo*
Reptilia	Bull Snake	*Pituophis catenifer sayi*
	Prairie Rattlesnake	*Crotalus viridis*
	Plains Garter Snake	*Thamnophis radix*
	Blue Racer Snake	*Coluber constrictor foxii*
	Horned Lizard	*Phrynosoma* sp.

Table 2.8. Common Fauna Associated with Aquatic/Riparian Habitat in the Region (Hoffman and Jones 1970:380-381; Nielsen 1996:3).

Taxonomic Class	Common Name	Scientific Name
Aves	Dabbling Duck Family	*Anatidae*
	Eastern Kingbird	*Tyrannus tyrannus*
	Blue Jay	*Cyanocitta cristata*
	Brown Thrasher	*Toxostoma rufum*
	Yellow Warbler	*Dendroica petechia*
Reptilia	Snapping Turtle	*Chelydra serpentina*
	Spiny Softshell Turtle	*Apalone spinifera*
Osteichthyes	Black Bullhead	*Ameiurus melas*
	White Sucker	*Catostomus commersoni*
	Channel Catfish	*Ictalurus punctatus*
Mammalia	Beaver	*Castor canadensis*
	Muskrat	*Ondatra zibethicus*

Table 2.8 (continued).

Taxonomic Class	Common Name	Scientific Name
Mammalia	American Mink	*Mustela vison*
	Otter	*Mustela lutrinae*
	North American Porcupine	*Erethizon dorsatum*
	American Black Bear	*Ursus americanus*
	Raccoon	*Procyon lotor*
	White-tailed Deer	*Odocoileus virginianus*
	Mule Deer	*Odocoileus hemionus*

2.4 PALEOENVIRONMENT

Evidence of the first human groups populating North America coincides with the end of the Pleistocene epoch and the subsequent termination of glacial advance. By this time, the Illinoian ice sheet had successfully dammed the flow of several ancestral rivers in South Dakota that had previously drained into Hudson Bay. Instead, the flow of these rivers was redirected south and east around the edge of the ice sheet, eventually emptying into what was then the ancestral Missouri River near the present location of the community of Yankton, South Dakota (Gries 1998:19). As a result of this directional shift in drainage patterns, many of the tributaries originally emptying into the ancestral White River began draining into the Cheyenne River system (Molyneaux et al. 2000:2-1). This altered drainage network was prevalent throughout the project area before 12,000 B.P. when the earliest human occupations became evident upon the landscape.

The transition from Pleistocene to Holocene was marked by a notable shift from a cooler, more mesic climate to a warmer, more arid one throughout the Northern Plains. Froiland (1978:34) describes the presence of ice sheets to the north, east, and west of the Project area near the end of the Pleistocene (approximately 13,000-10,500 B.P.) and the conifer forests of the Black Hills reaching their greatest extent into the surrounding plains during this time. The warmer, drier climate introduced after the onset of the Holocene is believed to have forced these forests back into the confines of the Black Hills, wherein the current extent of their range is now observed (Froiland 1978:34).

The present semiarid climate of the Northern Plains was beginning to become established around 11,400 B.P. in the west (Ruhe 1970:37), and exhibited a time-transgressive, eastward-trending migration thereafter (Wendland et al. 1987:465-466). Palynological evidence from the Ray Long site (39FA65) in Fall River County, South Dakota, confirms that this prairie environment was established along the southern edge of the Black Hills by approximately 11,000 B.P. (Scott and Lewis 1986:88). By approximately 9,000 B.P., the climate of this region closely mirrored that of the present (Martin 1987:329). Once the environment had become relatively stable, the prairie was largely dominated by the sagebrush and shortgrass species present today (Molyneaux et al. 2000:2-5).

The presence of megafauna during the terminal Pleistocene period, and their subsequent, rapid disappearance, is an exemplary indicator of the rate at which climate change was occurring (Frison et al. 1996:151). Evidence from east of the project area at the Lange/Ferguson site (39SH33) in Shannon County, South Dakota, indicates the presence of mammoth remains until approximately 10,700 B.P. (Hannus 1985:4, 1989:395). Immediately west of the project area at the Agate Basin site (48NO201) in Niobrara County, Wyoming, mammoth remains were recovered from a Clovis component level dating prior to approximately 10,100 B.P. (Frison 1982:179; Walker 1982:281-282). This time period appears to mark the end of any significant megafaunal presence throughout the region.

Not unlike the aforementioned floral community, the prehistoric faunal assemblage became relatively more stable succeeding the Pre-Boreal period (approximately 9,000 B.P.). Fauna from the Lange/Ferguson and Agate Basin sites are a viable representation of those species known to have existed near the project area during the Late Pleistocene/Pre-Boreal time period (approximately 13,000-9,000 B.P.) (Table 2.9).

Table 2.9. Late Pleistocene/Pre-Boreal Faunal Assemblage Recovered from the Lange/Ferguson and Agate Basin Sites (Martin 1987; Walker 1982 and 1987).

Taxonomic Class	**Common Name**	**Scientific Name**
Osteichthyes	Minnow	*Cyprinidae* (family)
Amphibia	Leopard Frog	*Rana pipiens*
	Tiger Salamander	*Ambystoma tigrinum*
	Salamander	*Ambystomatidae* (family)
Aves	Water Birds	*Anatidae* (family)
	Perching Birds	*Passeriformes* (order)
	American Robin	*Turdus migratorius*
	Sage Grouse	*Centrocerus urophasianus*
Reptilia	Water Snakes	*Colubridae* (family)
Mammalia	Shrew	*Sorex cinereus*
	Pygmy Shrew	*Microsorex hoyi*
	Short-tailed Shrew	*Blarina brevicauda*
	Rabbit	*Leporidae* (family)
	Mountain Cottontail	*Sylvilagus nuttallii*
	Desert Cottontail	*Sylvilagua audobonii*
	White-tailed Jackrabbit	*Lepus townsendii*
	Black-tailed Jackrabbit	*Lepus californicus*
	Richardson's Ground Squirrel	*Spermophilus richardsonii*
	Thirteen-lined Ground Squirrel	*Spermophilus tirdecemlineatus*
	Olive-backed Pocket Mouse	*Perognathus fasciatus*

Table 2.9 (continued).

Taxonomic Class	Common Name	Scientific Name
Mammalia	Northern Pocket Gopher	*Thomomys talpoides*
	Mouse	*Reithrodontomys* sp.
	White-footed Mouse	*Peromyscus leucopus*
	Deer Mouse	*Peromyscus maniculatus*
	Northern Grasshopper Mouse	*Onychomys leucogaster*
	Muskrat	*Ondatra zibethicus*
	Red-backed Vole	*Clethrionomys gapperi*
	Meadow Vole	*Microtus pennsylvanicus*
	Long-tailed Vole	*Microtus longicaudus*
	Western Jumping Mouse	*Zapus princeps*
	Lemming	*Lagurus curtatus*
	Bison	*Bison bison antiquus*
	Deer	*Odocoileus* sp.
	Red Deer	*Cervus elaphus*
	Pronghorn	*Antilocapra americana*
	Peccary	*Platygonus compressus*
	Mammoth	*Mammuthus* sp.
	American Camel	*Camelops cf. hesternus*
	Gray Wolf	*Canis lupus*
	Coyote	*Canis latrans*
	Red Fox	*Vulpes vulpes*
	Striped Skunk	*Mephitis mephitis*

After the end of the warmer, more arid Hypsithermal interval (approximately 8,000-5,000 B.P.),[1] the regional faunal assemblage became decidedly more analogous to that which existed immediately prior to European contact (Frison et al. 1996:153). A representation of local faunal remains from this period (approximately 5,000-150 B.P.) is presented in Table 2.10. A portion of these fauna were recovered from archeological sites 39FA23 in Fall River County, South Dakota (approximately 860-600 B.P.) (Lippincott and Byrne 1996:68; Warren 1996:79), and 39CU1401 in Custer County, South Dakota (Fosha and Sellet 2002). The remaining species were known to be common inhabitants of the Great Plains prior to European contact (Hoffman and Jones 1970:364-365).

[1] Period during the Holocene epoch characterized by a warmer, more arid climate (American Geological Institute [AGI] 1976).

Table 2.10. Late Prehistoric Faunal Assemblage from the Project Area (Fosha and Sellet 2002; Hoffman and Jones 1970:364-365; Lippincott and Byrne 1996:68; Warren 1996:79).

Taxonomic Class	Common Name	Scientific Name
Bivalvia	Giant Floater Mussel*	*Anodonta grandis*
	White Heelsplitter Mussel*	*Lasmigona complanata complanata*
	Fatmucket Mussel*	*Lampsilis siliquoidea*
	Fingernail Clam*	*Sphaerium* sp.
Amphibia	Toad*	*Bufo* sp.
	Frog†	*Ranid* sp.
Aves	Common Loon*	*Gavia immer*
	Perching Birds*†	*Passeriformes* (order)
	Crow/Raven*	*Corvus* sp.
	Golden Eagle*	*Aquila chrysaetos*
	Shore Birds†	*Charadriformes* (order)
	Pheasants†	*Phasianidae* (family)
	Hawk†	*Buteo* sp.
	Horned Owl†	*Bubo* sp.
	Broad-winged Hawk†	*Buteo platypterus*
	American Kestrel†	*Falco sparverius*
	Small Owl†	cf. *Aegolius arcadius*
Reptilia	Water Snakes*	*Colubridae* (family)
	Turtle†	cf. *Chrysemys picta*
	Lizard†	*Squamata* (order)
Mammalia	White-tailed Jackrabbit*	*Lepus townsendii*
	Eastern Cottontail*	*Sylvilagus floridanus*
	Rodent (unspecified)*	*Rodentia* (order)
	Deer Mouse	*Peromyscus maniculatus*
	Olive-backed Pocket Mouse*	*Perognathus fasciatus*
	Northern Pocket Gopher*	*Thomomys talpoides*
	White-footed Mouse*	*Peromyscus leucopus*
	Muskrat	*Ondatra zibethicus*
	Beaver†	*Castor canadensis*

† Denotes species present at archeological site 39CU1401, Custer County, South Dakota.
* Denotes species present at archeological site 39FA23, Fall River County, South Dakota.

Table 2.10 (continued).

Taxonomic Class	Common Name	Scientific Name
Mammalia	Porcupine†	*Erethizon dorsatum*
	Otter	*Lutra canadensis*
	Raccoon†	*Procyon lotor*
	Mink	*Mustela vison*
	Long-tailed Weasel	*Mustela frenata*
	Badger†	*Taxidea taxus*
	Striped Skunk	*Mephitis mephitis*
	Black Bear†	*Ursus americanus*
	Grizzly Bear	*Ursus arctos*
	American Bison*†	*Bison bison*
	Pronghorn*†	*Antilocapra americana*
	White-tailed Deer†	*Odocoileus virginianus*
	Mule Deer†	*Odocoileus hemionus*
	Wapiti†	*Cervus canadensis*
	Dog/Coyote/Wolf*†	*Canis* sp.
	Gray Wolf	*Canis lupus*
	Coyote	*Canis latrans*
	Red Deer†	*Cervus elaphus*
	Red Fox†	*Vulpes vulpes*
	Bobcat	*Lynx rufus*
	Mountain Lion†	*Felis concolor*
	Hare†	*Lepus* sp.
	Cottontail†	*Sylvilagus* sp.
	Weasels†	*Mustelid* usp.
	Black-tailed Prairie Dog†	*Cynomys ludovicianus*
	Thirteen-lined Ground Squirrel†	*Spermophilus tridecemlineatus*
	Voles†	*Microtus* sp.
	Pocket Mouse†	*Perognathus* sp.
	Pocket Gophers†	*Geomyidae*

† Denotes species present at archeological site 39CU1401, Custer County, South Dakota.
* Denotes species present at archeological site 39FA23, Fall River County, South Dakota.

CHAPTER 3: CULTURAL CONTEXT

This chapter presents a summary of the prehistory and history of the Northern Great Plains, focusing on southwestern South Dakota and the Black Hills.[1] A brief overview of the primary contexts comprising South Dakota's culture history is provided, highlighting those specific contexts relevant to the current project area. Following this introduction is a description of the contexts and respective sub-contexts, with particular emphasis placed upon the relevance of each to the current project.

3.1 CULTURE HISTORY OVERVIEW

Numerous Historic Contexts existed throughout North America over the past 13 millennia and the *South Dakota State Plan for Archaeological Resources* (Winham and Hannus 1991) denotes nine primary contexts and 13 thematic sub-contexts as having significant affiliations with the Northwestern Plains and the state of South Dakota (Tables 3.1 and 3.2; Figure 3.1). Seven of these primary contexts possess specific historic affiliations within the Black Hills Archaeological Region (Figure 3.2), while six prehistoric thematic sub-contexts are manifested there. These primary contexts and respective sub-contexts are further addressed below.

Table 3.1. Major Historic Contexts of South Dakota Relative to the Project Area (adapted from SARC 2007 and Winham and Hannus 1991).

Primary Historic Context	Approximate Date Range (Y.B.P.)	Likely Presence in Project Area
Paleoindian	ca. 11,500-8,000	Yes
Plains Archaic	ca. 8,500-2,500	Yes
Plains Woodland	ca. 2,500-1,000	Yes
Great Oasis	ca. 1,050-900	No
Plains Village	ca. 1,200-500	Yes
Late Prehistoric	ca. 1,500-300	Yes
Oneota	ca. 750-250	No
Protohistoric	ca. 300-150	Yes
Historic/Euroamerican	ca. 150-Present	Yes

Table 3.2. Prehistoric Thematic Sub-contexts of South Dakota with Manifestations in the Black Hills Archaeological Region (adapted from Winham and Hannus 1991).

Thematic Sub-context	Confirmed Presence in Region	Specific Reference/Localities
Bison Jump	Yes	Reher and Frison (1980); Sanson Buffalo Jump (39CU2)
Lithic Resources and Technology	Yes	see Winham and Hannus 1991 (30-6)
Prehistoric Quarries	Yes	Butterbrodt and Winham (1984)
Rock Art/Petroglyphs	Yes	Sundstrom (1984, 1989)
Sacred Sites	Yes	Bear Butte; Inyan Kara; Devil's Tower; Sundance Mountain
Stone Circles	Yes	Hovde (1980a); Wolf (1996)

[1] More general, comprehensive discussions concerning the culture history of the Great Plains region are available in: Frison (1991); Schlesier (1994); Wedel (1961); and Wood (1998). Works specifically detailing the Black Hills include: Cassells (1986); Cassells et al. (1984); Rom et al. (1996); and Sundstrom (1989).

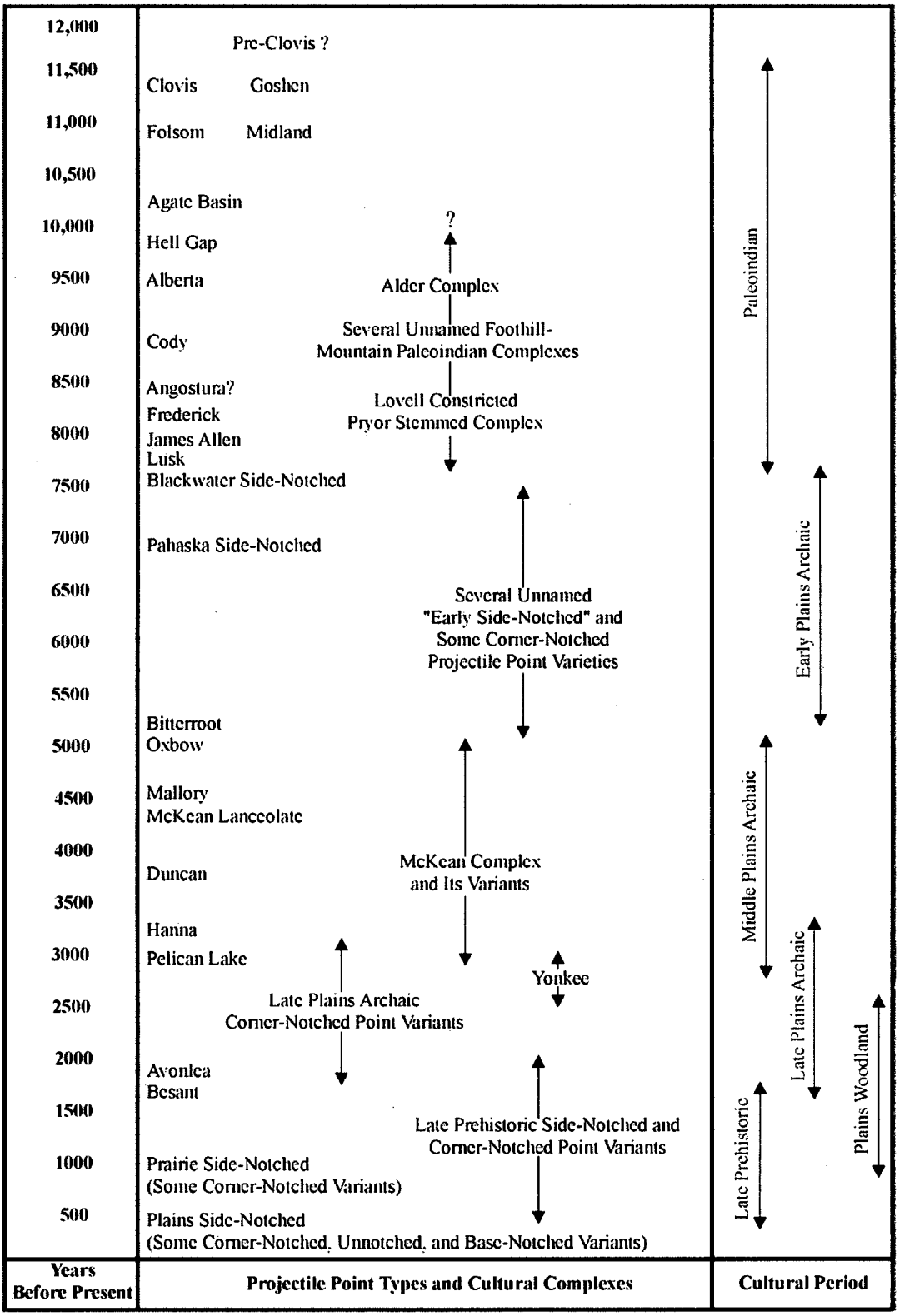

Figure 3.1. Cultural chronological chart of the Northwestern Plains (after Frison 1991:24).

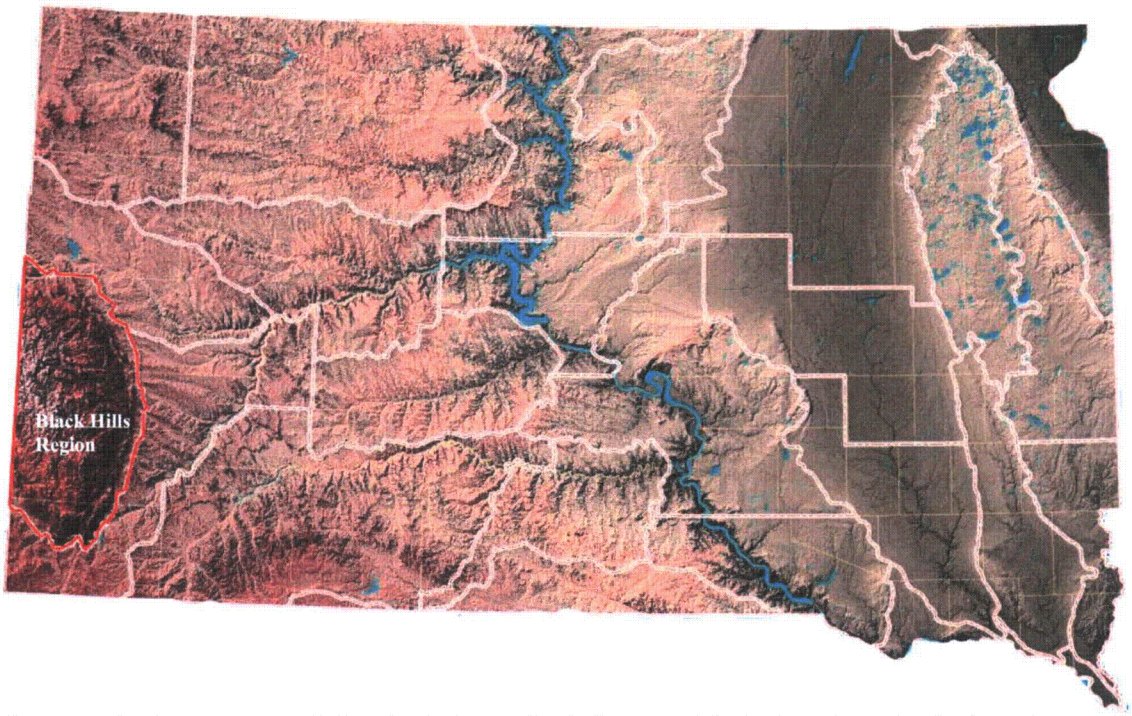

Figure 3.2. State map of South Dakota depicting established archaeological regions and highlighting the Black Hills Region in which the proposed project is located (adapted from SARC 2006).

3.1.1 Paleoindian Period (ca. 11,500-8,000 B.P.)

This tradition is currently acknowledged as the earliest population having existed throughout the Northern Great Plains region (Figure 3.3).[2] Characteristically, the Paleoindian tradition was adapted to the hunting of megafauna during the terminal Pleistocene; however, it has generally been accepted that this practice was augmented by additional foraging and small game hunting strategies (Molyneaux et al. 2000:3-4). Evidence of this tradition is typically derived from small, temporary encampments, and in association with the butchering of mammoth and extinct forms of bison. Extensive projectile point variation and distribution within this tradition is indicative of a nomadic lifestyle (Frison 1991). As is the case through the majority of the Central Plains region, evidence of Paleoindian groups within South Dakota, and therefore within Custer and Fall River counties, is extremely scarce.

Seven specific Paleoindian contexts have been identified, in large part, through the analysis of projectile point variations, throughout South Dakota. Those contexts identified are Clovis, Goshen, Folsom, Midland, Plainview, Early Plano (including Agate Basin, Hell Gap, Alberta, Cody, and Angostura sub-contexts), and Late Plano (including Frederick, James Allen, Eden, Scottsbluff, Lusk, and Milnesand sub-contexts) (Winham and Hannus 1991:10-1). Of these, only the Goshen, Plainview, Early Plano (Hell Gap, Agate Basin, and Angostura), and Late Plano (James Allen, Frederick or Lusk) are represented as defined

[2] The current dearth of scientific data regarding the presence of a pre-Clovis cultural group within the Northern Great Plains region accounts for the omission of this topic from the present discussion.

contexts in the documentation from Custer and Fall River counties to date (SARC 2007; Winham and Hannus 1991:10-10-10-14). Unassigned Paleoindian components have also been identified throughout the region.

Figure 3.3. Selection of Paleoindian projectile points demonstrating the range in variation between given complexes. Complexes represented from left to right are: Clovis, Folsom, Agate Basin, Hell Gap, Eden, and Dalton (specimens from ALAC comparative collection).

3.1.2 Plains Archaic Period (ca. 8,500-2,500 B.P.)

The transition between the Pleistocene and Holocene brought about many significant changes, including the extinction of numerous species of megafauna around 8,000 B.P. (Hester 1960:66). This change necessitated adaptations in subsistence strategies, which focused upon a far broader spectrum of resources. The result was an increase in reliance upon foraging and plant resources, as well as the hunting of smaller game species.

Cultural groups associated with this changing time are classified into what has been defined as the Archaic period. This period has been further sub-divided into Early, Middle, and Late phases for the purpose of defining the various cultural contexts assigned to the period. The Archaic period contexts associated with the Early Archaic in South Dakota are the Hawken and Logan Creek contexts (including Simonsen and Delong sub-contexts). Archaic contexts associated with the Middle Archaic in South Dakota are the Oxbow, McKean (including Duncan and Hanna phases), and Yonkee contexts. The Pelican Lake context represents the only defined Late Archaic context documented within the state. Numerous additional sites possessing unassigned contexts have also been documented from the Early, Middle, and Late

Archaic times. A selection of Archaic period projectile point specimens is illustrated in Figure 3.4, below.

Although relatively little evidence of Archaic period cultural groups has been documented throughout the project region thus far, their numbers far exceed those of the documented Paleoindian sites. Those contexts that have been documented in Custer and Fall River counties include Hawken, McKean (including both Duncan and Hanna phases), Yonkee, Pelican Lake, and additional unassigned contexts from each of the three Archaic phases (SARC 2007; Winham and Hannus 1991:10-16-10-24).

Figure 3.4. Selection of Archaic period projectile points. Complexes represented from left to right are: Yonkee, Oxbow, Pelican Lake, and Besant (specimens from ALAC comparative collection).

3.1.3 Plains Woodland Period (ca. 2,500-1,000 B.P.)

The Woodland Period is described as an innovative time wherein the introduction of new technologies, economies, and social practices was accomplished throughout the Great Plains (Lueck and Winham 2005:23). Broadly speaking, Woodland subsistence strategies are considered comparable to those of the Plains Archaic tradition, augmented by an increased reliance upon horticultural practices. Additional changes of significance during this time include the introduction of ceramics (Figure 3.5), semi-permanent dwellings (Grange 1980; Hill and Kivett 1940; Hoffman 1968), bow and arrow utilization, and burial mound construction (Lueck and Winham 2005:24). It deserves note, however, that these observed adaptations are intended to serve as more of a guideline for Woodland period identification, and should not be interpreted as some form of definitive indicator for this cultural context.

Figure 3.5. Plains Woodland pottery from central Nebraska (from *Nebraska History* 1994:108-109).

Plains Woodland sites have been recorded in fairly significant numbers throughout the Northwestern Plains to date. Woodland cultural groups on the High Plains continued nomadic hunting-and-gathering practices which likely were heavily dictated by the movements of free-roaming bison herds. Molyneaux et al. (2000:3-41) cite an abundance of teepee rings, coupled with a lack of observable cultigens or semi-sedentary structures in the archeological record, as support for this claim. Woodland sites are primarily defined by means of their ceramic wares; however, in the Northwestern Plains, a marked paucity of these ceramics has necessitated an increased reliance upon projectile point typology (Molyneaux et al. 2000:3-41). The regional adaptations observed among the Plains Woodland groups of the High Plains contrast decidedly with the adaptation patterns of the Woodland groups documented from further east.

Woodland period cultural contexts documented within South Dakota have been classified into three groups: Middle Woodland (including the Fox Lake phase, Besant and Sonota complexes, and Valley phase); Late Woodland (including the Loseke Creek and Lake Benton phases); and the Arvilla complex (Winham and Hannus 1991:10-1). Relatively few Woodland sites have been documented throughout the project region to date. Those Woodland period sites that have been documented in Custer and Fall River counties include components from the Middle Woodland (Besant) context and several additional sites with presently unassigned Woodland components (SARC 2007; Winham and Hannus 1991:10-26-10-33).

3.1.4 Late Prehistoric/Plains Village Period (ca. 1,500-300 B.P.)

Peoples of the Late Prehistoric/Plains Village period in South Dakota are defined, in many ways, analogously to earlier Plains Woodland cultural groups (Figure 3.6). Along the Missouri River, Plains Village sites are typically associated with large, complex settlements reflective of increasingly sedentary lifeways (Lippincott 1996:13); however, archeological evidence west of the river indicates subsistence strategies with continuing reliance upon bison, augmented by seasonal foraging practices (Buechler 1999:14). Additionally, an observed trend in projectile point technology, increasingly favoring smaller, corner- and side-notched varieties, suggests an increased reliance upon the bow and arrow for bison procurement during this period (Frison 1991:111).

Very few sites of the Plains Village period have been documented within Custer and Fall River counties, and Buechler (1999:14) asserts that the dynamics of this occupation period are still poorly understood throughout the region. Sites of this period that have been definitively classified in the region include those with unassigned Plains Village components, unassigned Early Plains Village components, and Extended Coalescent components (SARC 2007: Winham and Hannus 1991:10-34-10-42).

Late Prehistoric cultural contexts documented within South Dakota have been classified into three groups, including the Avonlea phase, the Old Women's phase, and the later Nomadic Northern Plains Bison-Hunting Groups (e.g., the prehistoric predecessors of the Cheyenne, Crow, Kiowa, Shoshone, and Sioux) (Winham and Hannus 1991:10-1). Only components from the Avonlea phase have been definitively classified in Custer and Fall River counties (SARC 2007; Winham and Hannus 1991:10-26-10-33). However, several sites with presently unassigned Late Prehistoric components have also been documented throughout the Black Hills region (Buechler 1999:14).

Figure 3.6. Selection of Coalescent ceramic rims recovered from separate Missouri River sites in South Dakota. Wares depicted from left to right include: Grey Cloud Ware from the Crow Creek site (39BF11), Buffalo County; Talking Crow Ware from the Talking Crow site (39BF3), Buffalo County; and La Roche Ware from the La Roche site (39ST9), Stanley County (specimens from ALAC comparative collection).

3.1.5 Protohistoric Period (ca. 300-150 B.P.)

The Protohistoric period is characterized by the beginnings of European contact with the Plains tribal groups, predominantly via the preceding diffusion of European cultural materials (Frison 1991:123). European settlement still remained largely confined to the Plains periphery during this period, although historic accounts of infrequent contact with various tribal groups do exist (Molyneaux et al. 2000:3-5). The most significant cultural changes introduced into the tribal groups of the Northern Plains coincide with the diffusion of various metal and decorative artifacts, firearms, and the horse during the first quarter of the eighteenth century (Buechler 1999:14; Frison 1991:122; Molyneaux et al. 2000:3-5).

Winham and Hannus (1990:10-62) identify 13 separate tribal affiliations within South Dakota during the Protohistoric period. Those tribal groups identified include: Mandan; Hidatsa; Arikara; Crow; Comanche; Cheyenne; Shoshonean; Wiciyela Sioux (including Yankton and Yanktonai); Teton Sioux (including Teton, Oglala, Brule, Miniconjou, Two Kettle, Sans Arc, and Hunkpapa); Santee Sioux (including Wahpeton, Sisseton, Mdewakantonwan, and Wahpekute); Apache/Kiowa (including Kiowa-Apache/Padouca/Gataka); Ioway (including Oto/Omaha and Ponca); and Southern Ute (Figure 3.7).

At the onset of the eighteenth century, tribes historically associated with the current project region included the Crow, Plains Apache, Ponca, Comanche, Kiowa, and Kiowa-Apache; however, the Mandan and Arikara of the Missouri River Valley are also known to have traveled to the area for the purpose of trade and resource procurement (Buechler 1999:14). By approximately 230 B.P., groups of Lakota Sioux, and to a lesser extent, Arapahoe and Cheyenne, had forced these previous inhabitants out of the region to the south and west (Buechler 1999:14-16).

Documented archeological sites in Custer and Fall River counties have been classified as possessing unassigned Native American components, and a small number of sites have been defined as having components associated with the Lakota Sioux peoples (SARC 2007; Winham and Hannus 1991:10-63). Despite the significant body of historic documentation regarding tribal groups throughout western South Dakota, very little evidence is manifested within the archeological record of the area. Buechler (1999:16) views the dearth of European trade goods recovered from Native American sites in the Black Hills as a potential problem associated with the identification of these specific groups there, noting that the presence of Euroamerican goods can oftentimes aid in the identification of sites from this period.

Figure 3.7. Sioux encampment as depicted during the Bear Dance (painting by George Catlin, 1847).

3.1.6 Historic/Euroamerican Period (ca. 150 B.P.-Present)

Historically, those lands comprising Custer and Fall River counties were occupied by the Lakota Sioux peoples prior to the first Euroamerican settlement of the region in the final quarter of the nineteenth century (Buechler 1999:16). In A.D. 1877, Custer County was officially established by an act of territorial legislation (Nielsen 1996:2). Establishment of the county was a direct response to Lieutenant George A. Custer's Black Hills Expedition of A.D. 1874 (Figure 3.8), which confirmed the presence of gold within the area (Molyneaux et al. 2000:3-61). In A.D. 1876, the founding of Rapid City established an eastern 'gateway' into the heart of the Black Hills mining region, as well as a significant transportation center (Nielsen 1996:2). Smaller, peripheral communities adjacent to the Black Hills, such as Wall, New Underwood, Hermosa, Quinn, and Fairburn were established along the various railroad lines by the early twentieth century. These outlying communities aided the increasing ranching and farming populations by exporting agricultural products and importing various finished goods and services (Nielsen 1996:2).

With the hope of discovering additional gold deposits in the southern Black Hills, Fall River County was established by an act of territorial legislation in A.D. 1883. Although the prospect of gold provided the impetus behind the establishment of Fall River County, none was ever reported to have been found there (Kalvels 1982:2). Excepting the mining industry, Fall River County eventually developed in much the same manner as Custer County.

Ranching and farming communities continued to grow, while additional towns, such as Edgemont, Dewey, Burdock, Oelrichs, and Oral, were established along the various railroad lines.

By A.D. 1876, only two years after Custer's Expedition identified gold deposits, the Black Hills had been ceded to the U.S. government by the Lakota peoples, and intensive mining operations had begun. The gold rush irrevocably transformed the demographics of the Black Hills. Buechler (1996:5a-4) cites Parker and Lambert (1980) who indicate that tens of thousands of Euroamericans founded hundreds of settlements within a few months time throughout the area. In addition to Euroamerican ethnic populations associated with the gold rush, African-Americans, East Asians, and Jews had an historic presence throughout the Black Hills (Noisat 1996:4b-5). Most notable among these were the Chinese, who immigrated to the Black Hills throughout the gold rush era and subsequently developed a substantial presence in the community of Deadwood (Noisat 1996:4b-5).

Figure 3.8. George A. Custer's military expedition into the Black Hills, 1874 (photograph by William H. Illingworth, courtesy of the National Archives).

The gold rush also served as the proximal catalyst in the development of numerous overland stage and freight routes into the Black Hills—thereby providing a means of accommodating the ever-increasing number of miners and settlers into the area. Such routes entered the Hills from all directions, including those originating in the towns of Bismarck, North Dakota; Cheyenne, Wyoming; Fort Pierre, South Dakota; and Sidney, Nebraska (Buechler 1996:5a-

4). Railroads followed shortly thereafter. Initially, this took the form of narrow-gauge lines designed, primarily, for hauling ores from the mines, and equipment and supplies to the mining towns. By the end of the 1880s, standard-gauge lines had successfully connected the Black Hills with the larger, pre-existing railroads throughout the country (Buechler 1996:5a-4). The first paved roads arrived in the Black Hills around 1917 (Sundstrom and Sundstrom 1996a:5c-10). Increased reliance on automobiles by farmers and ranchers during this time, coupled with a rise in tourism, caused a dramatic increase in paved road construction throughout the 1920s (Sundstrom and Sundstrom 1996a:5c-11).

Throughout the 1930s and into the 1940s, two significant work relief programs were active throughout the Black Hills. The Civilian Conservation Corps (CCC) and the Works Progress Administration (WPA) were both programs designed to provide work for unemployed citizens who had lost jobs as a result of the 1929 stock market collapse and the subsequent onset of the Great Depression. Workers under these programs were responsible for the construction of a number of public facilities throughout the Black Hills, including: bridges; camps; check dams; culverts; dams; lookout towers; and ranger offices and dwellings (Sundstrom and Sundstrom 1996b:4c-5).

A total of three Historic/Euroamerican contexts have been identified throughout the state of South Dakota. Those contexts represented include: Early Exploitation and Military Presence (including Fur Trade Posts, Trails, Battlegrounds, and Military Forts/Encampments); Permanent Rural and Urban Pioneer Settlement (including Mining, Railroad, Homestead, and Ethnic Settlement); and Miscellaneous Historic/Euroamerican Contexts (including Rock Art) (Winham and Hannus 1991:10-2).

Each of these contexts has been documented archeologically within Custer and Fall River counties. Specific sub-contexts documented in this region include: Military Forts/Encampments; Trails; Mining; Railroads; Homesteads; Ethnic Settlements; and Rock Art (SARC 2007; Winham and Hannus 1991:10-64-10-69).

Presently, the economy and land utilization in Custer and Fall River counties continue to be dominated by ranching practices (Figure 3.9). Approximately 83 percent of the land in Fall River County is currently utilized as rangeland (Kalvels 1982:2), and in 1990, some 74,000 animal unit months of grazing were available in western Custer County annually (Ensz 1990:4). Agriculture comprises the second largest economic enterprise in Fall River County, with the majority of remaining land there utilized for crop cultivation (Kalvels 1982:2). In western Custer County and throughout the Black Hills, however, topography typically precludes any significant amount of farming in most areas. In this area, timber is cited as an important commodity, with the forests yielding approximately 50 million board feet annually (Ensz 1990:4). Additionally, the Black Hills continue to be exploited mineralogically, and tourism drives the region's economy throughout the summer months. The only significant population center located near the current project area is the town of Edgemont. The nearest major route of transportation is US Highway 18.

Figure 3.9. Free-range livestock indicating the importance of ranching to the economies of Custer and Fall River counties, South Dakota.

CHAPTER 4: RESEARCH DESIGN AND METHODOLOGY

The objectives of this investigation were the completion of a Level III archeological survey of all land parcels within the defined APE and the subsequent documentation and preliminary NRHP evaluation of all cultural resources observed therein. To this end, an established research orientation was followed, and field methodology was implemented pursuant to governing state (SHPO 2005) and federal (ACHP 2006) standards for the management and protection of cultural resources.

This chapter outlines the research design and methodology implemented by ALAC during the course of field investigations. First, a review and evaluation of previous cultural resources work conducted throughout the project region is presented. Specific research objectives are then delineated, and the methodology and implementation of fieldwork procedures are addressed. The chapter concludes with a discussion of those procedures employed to record data throughout the course of the field investigations.

4.1 IDENTIFICATION AND EVALUATION OF PRIOR WORK AND DOCUMENTATION

A comprehensive literature search and records review of the project area was completed on April 11, 2007 by Michael R. Fosha, Assistant State Archaeologist, State Archaeological Research Center (SARC), Rapid City. Records were accessed from the SARC Archaeological Resources Management System (ARMS) database (SARC 2007), as well as from the United States Forest Service (USFS) Black Hills National Forest (BHNF) archives. Results of this review revealed that six previously recorded surveys, or portions thereof, have been conducted within the proposed APE (Table 4.1) and 57 archeological sites have been previously documented within these same confines (Table 4.2). Additionally, 15 previously recorded surveys, or portions thereof, have been conducted within one mi (1.61 km) of the APE (Table 4.3), and 69 previously recorded archeological sites have been identified within one mi (1.61 km) of the APE (Table 4.4).

Table 4.1. Previously Recorded Archeological Surveys within the APE.

Survey Number	Report Author	Report Date	County
ACU-0412	J. V. Buechler	1999	Custer
BLH-0015	J. S. Sigstad and R. Jolley	1975	Custer/Fall River
BLH-0030	K. Lippincott	1980a	Custer/Fall River
BLH-0033	K. Lippincott	1981	Custer/Fall River
BLH-0039	C. A. Reher	1981	Custer/Fall River
R1980020300084	K. Lippincott	1980b	Custer/Fall River

Table 4.2. Previously Recorded Archeological Sites within the APE.

Site Number	Cultural Affiliation	Type Description	Landform Position	Relocated by ALAC in 2007	NRHP Status
39CU32A	Native American	Artifact Scatter	Ridge Crest	No	Unevaluated
39CU33	Native American	Artifact Scatter	Ridge Crest	No	Unevaluated
39CU251	Native American	Artifact Scatter	Ridge Crest	Yes	Unevaluated
39CU271	Native American/ Late Archaic/ Middle Archaic	Artifact Scatter/ Occupation/ Occupation	Ridge Slope	Yes	Eligible
39CU273	Pelican Lake	Artifact Scatter	Hill Top	No	Unevaluated
39CU451	Native American	Artifact Scatter	—	Yes	Unevaluated
39CU456	Native American	Artifact Scatter	Ridge Crest	No	Unevaluated
39CU457	Native American	Artifact Scatter	—	No	Unevaluated
39CU459	Native American	Artifact Scatter	Ridge Crest	No	Unevaluated
39CU460	Native American	Artifact Scatter	—	Yes	Unevaluated
39CU461	Native American	Isolated Find	—	Yes	Not Eligible
39CU462	Native American	Isolated Find	—	No	Not Eligible
39CU463	Native American	Artifact Scatter	Hill Top	Yes	Unevaluated
39CU464	Native American	Artifact Scatter	Hill Top	Yes	Unevaluated
39CU528	Native American	Isolated Find	Ridge Slope	No	Not Eligible
39CU530	Native American	Isolated Find	Valley Floor	Yes	Not Eligible
39CU531	Native American/ Euroamerican	Artifact Scatter/ Artifact Scatter	Ridge Crest	Yes	Unevaluated
39CU532	Native American	Artifact Scatter	Gully	Yes	Unevaluated
39CU533	Unknown	Cairn	Ridge Slope	Yes	Unevaluated
39CU554	Native American	Artifact Scatter	Valley Floor	No	Unevaluated
39CU556	Late Archaic	Artifact Scatter	Hill Base	Yes	Unevaluated
39CU557	Native American	Artifact Scatter	Hill Top	Yes	Unevaluated
39CU558	Late Archaic	Artifact Scatter	Hill Slope	No	Unevaluated
39CU559	Late Archaic	Artifact Scatter	Valley Floor	Yes	Unevaluated

Table 4.2 (continued).

Site Number	Cultural Affiliation	Type Description	Landform Position	Relocated by ALAC in 2007	NRHP Status
39CU560	Euroamerican	Foundation	Hill Top	No	Unevaluated
39CU561	Late Archaic	Artifact Scatter	—	No	Unevaluated
39CU585	Native American	Isolated Find	Hill Slope	No	Not Eligible
39CU648	Native American/ Native American	Kill/ Artifact Scatter	Rolling Plain	Yes	Unevaluated
39CU653	Native American	Artifact Scatter	Valley Terrace	No	Unevaluated
39CU2000	Euroamerican	Railroad	Rolling Plain	Yes	Eligible
39FA96	Euroamerican	Farmstead	Hill Slope	Yes	Unevaluated
39FA97	Euroamerican	Farmstead	Valley Slope	Yes	Unevaluated
39FA110	Native American	Artifact Scatter	Valley Terrace	No	Unevaluated
39FA114	Native American	Isolated Find	Hill Slope	No	Not Eligible
39FA115	Native American	Isolated Find	Hill Slope	No	Not Eligible
39FA116	Native American	Isolated Find	Hill Slope	No	Not Eligible
39FA117	Native American	Isolated Find	Hill Base	No	Not Eligible
39FA118	Native American	Occupation	Hill Base	Yes	Unevaluated
39FA174	Native American	Artifact Scatter	Ridge Crest	No	Not Eligible
39FA251	Native American	Artifact Scatter	Valley Slope	Yes	Unevaluated
39FA269	Native American	Artifact Scatter	Ridge Crest	Yes	Unevaluated
39FA270	Native American	Artifact Scatter	Hill Base	No	Unevaluated
39FA271	Native American	Artifact Scatter	—	Yes	Unevaluated
39FA272	Native American	Artifact Scatter	Ridge Top	Yes	Unevaluated
39FA273	Native American	Artifact Scatter	—	Yes	Unevaluated
39FA274	Native American	Artifact Scatter	—	No	Unevaluated
39FA275	Native American	Artifact Scatter	—	No	Unevaluated
39FA556	Native American	Artifact Scatter	—	No	Unevaluated
39FA557	Euroamerican	Farmstead	—	Yes	Unevaluated
39FA558	Native American	Isolated Find	—	No	Not Eligible

Table 4.2 (continued).

Site Number	Cultural Affiliation	Type Description	Landform Position	Relocated by ALAC in 2007	NRHP Status
39FA578	Native American	Isolated Find	Valley Terrace	No	Not Eligible
39FA583	Native American	Artifact Scatter	—	No	Unevaluated
39FA584	Euroamerican	Cabin	Hill Slope	Yes	Unevaluated
39FA740	Native American	Artifact Scatter	Hill Slope	Yes	Unevaluated
39FA777	Native American	Artifact Scatter	Valley Terrace	No	Unevaluated
39FA778	Euroamerican	Farmstead	Ridge Base	Yes	Unevaluated
39FA2000	Euroamerican	Railroad	Rolling Plain	Yes	Eligible

Table 4.3. Previously Recorded Archeological Surveys within One Mile of the APE.

Survey Number	Report Author	Report Date	County
ACU-0086	N. Chevance	1986	Custer
ACU-0477	R. P. Winham et al.	2001	Custer
ACU-0672	T. Willems and M. Karnopp	2005	Custer
AFA-0275	C. L. Armitage	2002	Fall River
BLH-0018	J. K. Haug	1978b	Custer/Fall River
BLH-0021	N. Chevance	1978a	Custer/Fall River
BLH-0023	N. Chevance	1978b	Custer/Fall River
BLH-0035	K. Lippincott	1982	Custer/Fall River
BLH-0038	K. Lippincott	1983	Custer/Fall River
BLH-0157	B. A. Noisat	1999	Custer/Fall River
BLH-0225	B. A. Noisat	2001	Custer/Fall River
WSD-0044	T. A. Girouard	1983	Custer/Fall River
R1986020300139	E. Hamilton	1986	Custer/Fall River/ Pennington
N/A	B. L. Molyneaux et al. (M. J. Retter et al.)	2000 (2007)	Custer/Fall River/ Pennington
N/A	A. A. Buhta and J. M. Kruse	2007	Custer/Fall River/ Pennington

Table 4.4. Previously Recorded Archeological Sites within One Mile of the APE.

Site Number	Cultural Affiliation	Type Description	Landform Position	County	NRHP Status
39CU32	Native American	Artifact Scatter	Valley Floor	Custer	Unevaluated
39CU34	Late Archaic	Artifact Scatter	Ridge Crest	Custer	Unevaluated
39CU241	Early Archaic/ Native American	Artifact Scatter/ Alignment	Hill Base	Custer	Not Eligible
39CU252	Plainview	Artifact Scatter	Ridge Crest	Custer	Unevaluated
39CU253	McKean	Artifact Scatter	Ridge Crest	Custer	Eligible
39CU452	Native American	Artifact Scatter	—	Custer	Unevaluated
39CU466	Native American	Occupation	Valley Floodplain	Custer	Not Eligible
39CU529	Native American	Occupation	Valley Floodplain	Custer	Unevaluated
39CU555	Late Archaic/ Late Prehistoric	Artifact Scatter/ Artifact Scatter	Ridge Slope	Custer	Eligible
39CU558	Late Archaic	Artifact Scatter	Hill Slope	Custer	Unevaluated
39CU584	Native American/ Native American	Occupation/ Burial	Ridge Slope	Custer	Unevaluated
39CU593	Native American/ Euroamerican	Occupation/ Artifact Scatter	Hill Slope	Custer	Unevaluated
39CU643	Native American	Artifact Scatter	Valley Terrace	Custer	Unevaluated
39CU645	Native American	Isolated Find	Rolling Plain	Custer	Not Eligible
39CU646	Native American	Isolated Find	Rolling Plain	Custer	Not Eligible
39CU647	Native American	Isolated Find	Rolling Plain	Custer	Not Eligible
39CU652	Euroamerican	Cabin	Valley Terrace	Custer	Unevaluated
39CU1748	Native American	Artifact Scatter	Ridge Base	Custer	Not Eligible
39CU1750	Native American	Artifact Scatter	Ridge Slope	Custer	Not Eligible
39CU1751	Native American	Artifact Scatter	Hill Top	Custer	Not Eligible
39CU1752	Native American/ Euroamerican/	Artifact Scatter/ Cabin & Depression	Valley Terrace	Custer	Unevaluated

Table 4.4 (continued).

Site Number	Cultural Affiliation	Type Description	Landform Position	County	NRHP Status
39CU1753	Native American	Artifact Scatter	Valley Terrace	Custer	Not Eligible
39CU1754	Native American	Artifact Scatter	Hill Top	Custer	Not Eligible
39CU1755	Native American	Isolated Find	Rolling Plain	Custer	Not Eligible
39CU1756	Native American	Artifact Scatter	Rolling Plain	Custer	Not Eligible
39CU1757	Euroamerican	Artifact Scatter	Ridge Slope	Custer	Not Eligible
39CU1758	Native American/ Euroamerican	Artifact Scatter/ Artifact Scatter	Ridge Slope	Custer	Eligible
39CU1759	Native American	Isolated Find	Ridge Slope	Custer	Not Eligible
39CU1760	Native American	Isolated Find	Ridge Slope	Custer	Not Eligible
39CU2618	Native American	Artifact Scatter	Butte Base	Custer	Unevaluated
39CU2619	Native American	Artifact Scatter	Butte Scarp	Custer	Unevaluated
39CU2621	Native American	Artifact Scatter	Ridge Crest	Custer	Unevaluated
39CU2622	Unknown	Depression	Butte Top	Custer	Unevaluated
39CU2623	Native American/ Native American	Artifact Scatter/ Stone Circle	Butte Top	Custer	Unevaluated
39CU2624	Native American	Isolated Find	Butte Scarp	Custer	Not Eligible
39CU2678	Native American	Artifact Scatter	Ridge Slope	Custer	Unevaluated
39CU2679	Native American	Artifact Scatter	Ridge Slope	Custer	Unevaluated
39CU2680	Native American	Artifact Scatter	Ridge Slope	Custer	Unevaluated
39CU2681	Native American	Artifact Scatter	Ridge Slope	Custer	Unevaluated
39CU2682	Native American	Artifact Scatter	Ridge Slope	Custer	Unevaluated
39CU2683	Native American	Isolated Find	Ridge Slope	Custer	Not Eligible
39CU2684	Native American	Artifact Scatter	Ridge Slope	Custer	Unevaluated
39CU2685	Native American	Artifact Scatter	Ridge Slope	Custer	Unevaluated
39CU2686	Unknown/ Euroamerican	Hearth/ Isolated Find	Ridge Slope	Custer	Unevaluated

Table 4.4 (continued).

Site Number	Cultural Affiliation	Type Description	Landform Position	County	NRHP Status
39CU2687	Native American	Artifact Scatter	Ridge Slope	Custer	Unevaluated
39CU2689	Native American	Isolated Find	Ridge Slope	Custer	Not Eligible
39CU2690	Native American	Isolated Find	Ridge Slope	Custer	Not Eligible
39CU2694	Goshen	Artifact Scatter	Ridge Slope	Custer	Unevaluated
39CU2745	Native American	Isolated Find	Ridge Slope	Custer	Not Eligible
39CU2746	Native American	Occupation	Ridge Slope	Custer	Unevaluated
39CU2750	Native American	Artifact Scatter	Ridge Slope	Custer	Unevaluated
39CU2751	Native American	Artifact Scatter	Ridge Slope	Custer	Unevaluated
39CU2849	Native American	Artifact Scatter	Ridge Crest	Custer	Not Eligible
39CU2850	Native American	Isolated Find	Ridge Crest	Custer	Not Eligible
39FA111	Native American	Occupation	Valley Terrace	Fall River	Unevaluated
39FA175	Native American	Isolated Find	Canyon Talus	Fall River	Not Eligible
39FA513	Native American	Artifact Scatter	Valley Terrace	Fall River	Not Eligible
39FA514	Native American	Isolated Find	Ridge Crest	Fall River	Not Eligible
39FA515	Native American	Isolated Find	Ridge Slope	Fall River	Not Eligible
39FA516	Native American	Isolated Find	Canyon Talus	Fall River	Not Eligible
39FA517	Native American	Isolated Find	Ridge Crest	Fall River	Not Eligible
39FA539	Native American	Artifact Scatter	Ridge Crest	Fall River	Eligible
39FA556	Native American	Artifact Scatter	—	Fall River	Unevaluated
39FA1349	Native American	Artifact Scatter	Valley Terrace	Fall River	Not Eligible
39FA1350	Native American	Isolated Find	Valley Terrace	Fall River	Not Eligible
39FA1455	Native American	Artifact Scatter	Ridge Crest	Fall River	Not Eligible
39FA1779	Native American	Artifact Scatter	Valley Terrace	Fall River	Unevaluated
39FA1780	Euroamerican	Artifact Scatter	Valley Terrace	Fall River	Unevaluated
39FA1784	Native American/ Euroamerican	Occupation/ Farmstead	Valley Terrace	Fall River	Unevaluated

4.1.1 Black Hills Archaeological Region

The APE, as presently established, is located wholly within the confines of the Black Hills Archaeological Region as defined by the *South Dakota State Plan for Archaeological Resources* (Winham and Hannus 1991:30). Occasional archeological investigations within the Black Hills Region began during the early 1920s, and continued through the early 1970s (Winham and Hannus 1991:30-2). Personnel from the University of South Dakota Museum (presently the W. H. Over Museum), Vermillion, conducted much of the early research, including the investigation of a number of sites in the southern Black Hills (Over 1924, 1941). Museum research was largely halted because of World War II until the 1960s, when the extensive post-war era reservoir construction along the Missouri River basin began (Winham and Hannus 1991:30-3).

During the late 1940s, River Basin Survey (RBS) research crews in the Black Hills Region conducted investigations at Deerfield Reservoir (Cooper 1947), and later around the Cottonwood Springs Reservoir (Mallory 1967). This investigation led to the recording of 30 sites; however, many of these were determined to have been previously documented during earlier investigations of the Angostura Reservoir area in the South Fork Cheyenne Region (Nowak and Hannus 1983:4.2). Additional research was conducted for the United States Army Corps of Engineers (USACE) at Cottonwood Springs Reservoir and at Coldbrook Reservoir by Haug (1976b) and Weston (1982).

By the mid-1970s, systematic, intensive archeological surveys had been incorporated into the BHNF cultural resources management program. Also occurring during this period were increases in mineral exploration and highway construction throughout much of the southern Black Hills. A selection of significant cultural resource reports published from the mid-1970s through the 1980s includes: Buechler (1985a, 1985b, 1986, 1987a-1987h, 1988a-1988e, 1989); N. Chevance (1979); T. Chevance (1985); Church and Martin (1985); Church et al. (1985); Cooper (1947); Haug (1976a, 1977, 1978a, 1978b, 1979, 1982, 1984); Haug et al. (1980, 1987); Hovde (1980a, 1980b, 1981); Reher (1981); Reher and Lahren (1977); Rom (1984); Sigstad and Jolley (1975); Tratebas (1978a, 1978b, 1979a, 1979b, 1982); and Tratebas and Vagstad (1979).

During the early 1980s, Lippincott (1980a; 1980b; 1981; 1982; 1983) conducted a number of surveys in and around the project area for the Tennessee Valley Authority (TVA). Between 1984 and 1989, the BHNF reported the submission of over 800 cultural resource reports, the majority of which detailed small-scale surveys and the documentation of few or no archeological sites (Winham and Hannus 1991:30-4). Separate culture history overviews were compiled for the Black Hills Region during this time by Cassells et al. (1984), Cassells (1986), and Sundstrom (1989).

From the 1990s onward, numerous additional investigations have taken place throughout the Black Hills Region. A selection of a portion of these investigations includes: Buechler (1999, 2000, 2002); Buhta and Kruse (2007); Church (1999); Donohue (2003); Donohue and Hanenberger (1993); Donohue and Sellet (2002); Flemmer (1992); Fosha (1993); Fosha and Sellet (2001, 2002); Hanenberger (1994); Harrison (1991); Kornfeld (2003); Martin et al. (1993); Molyneaux et al. (2000) (see Retter et al. (2007)); Noisat (1991); and Winham et al.

(2001, 2007). An overview of cultural resources within the BHNF was also produced during this time (Rom et al. 1996).

Of particular relevance to the current project are the recent investigations and NRHP evaluations conducted by ALAC (Winham et al. 2001, 2007) and Buechler (1999, 2000, 2002) for a land exchange in southwestern Custer County between the Bureau of Land Management (BLM) and GCC Dacotah, Inc., Rapid City, South Dakota. The investigations by ALAC resulted in the systematic examination of approximately 3,660 ac (1,481.15 ha) of land and the documentation of 197 archeological sites in the immediate vicinity of the current project area (Winham et al. 2001:ii).

Although data for most temporal/cultural periods are generally better documented within the Black Hills than within other Archaeological Regions throughout the state, a large majority of this has been generated by means of surface collections (Winham and Hannus 1991:30-8). As a result, the continuance of basic inventory and systematic data collection procedures remains a primary research objective within the Black Hills Region.

4.2 PROJECT OBJECTIVES

Several project-specific objectives were outlined by Powertech in the contractual obligations and work plan for this investigation. Objectives for field research included the following:

- Implementation of on-the-ground 100 percent (Level III) pedestrian survey to established federal (ACHP 2006) and state (SHPO 2005:9) standards. Initial investigations to be confined to those portions of the APE defined by Powertech as high-priority drilling sites. Results of field investigations in high priority areas to be reported verbally to Michael R. Fosha, Assistant State Archaeologist, SARC. Subsequent investigations to focus on remaining drill sites and additional land comprising the Dewey-Burdock Project APE (see Appendix F).

- Documentation of each site located to appropriate governing state and federal standards for the management and protection of cultural resources, including an assessment of each site's cultural-historical taxonomic unit and function.

- Preliminary evaluation of the NRHP eligibility status of cultural resources (NPS 1991:37).

- Compilation of obtained data into a confidential report, documenting the results of field investigations, including site descriptions, GIS-produced maps, preliminary NRHP eligibility recommendations, and management recommendations.

4.3 FIELDWORK METHODOLOGY AND IMPLEMENTATION

The ALAC pedestrian survey began on April 17, 2007, and concluded on August 3, 2007. Specifications for a Level III cultural resources survey were followed throughout the investigation. The South Dakota SHPO defines a Level III cultural resources survey as follows:

> Level III: 100 Percent Survey. Level III surveys require a visual inspection of the project APE. Survey transects must be no more than 30 meters (100 feet) apart. The report must explain survey methods and the rationale for their use, for instance, why the archaeologist did or did not conduct subsurface testing [SHPO 2005:9].

ALAC field crews were composed of between four and ten individuals throughout the duration of the survey. The APE was demarcated by Powertech personnel prior to field investigations. ALAC was provided with satellite imagery and USGS 7.5-minute series 1:24,000 scale topographic quadrangle maps highlighting the proposed project area and those land parcels requiring investigation (Figure 4.1).

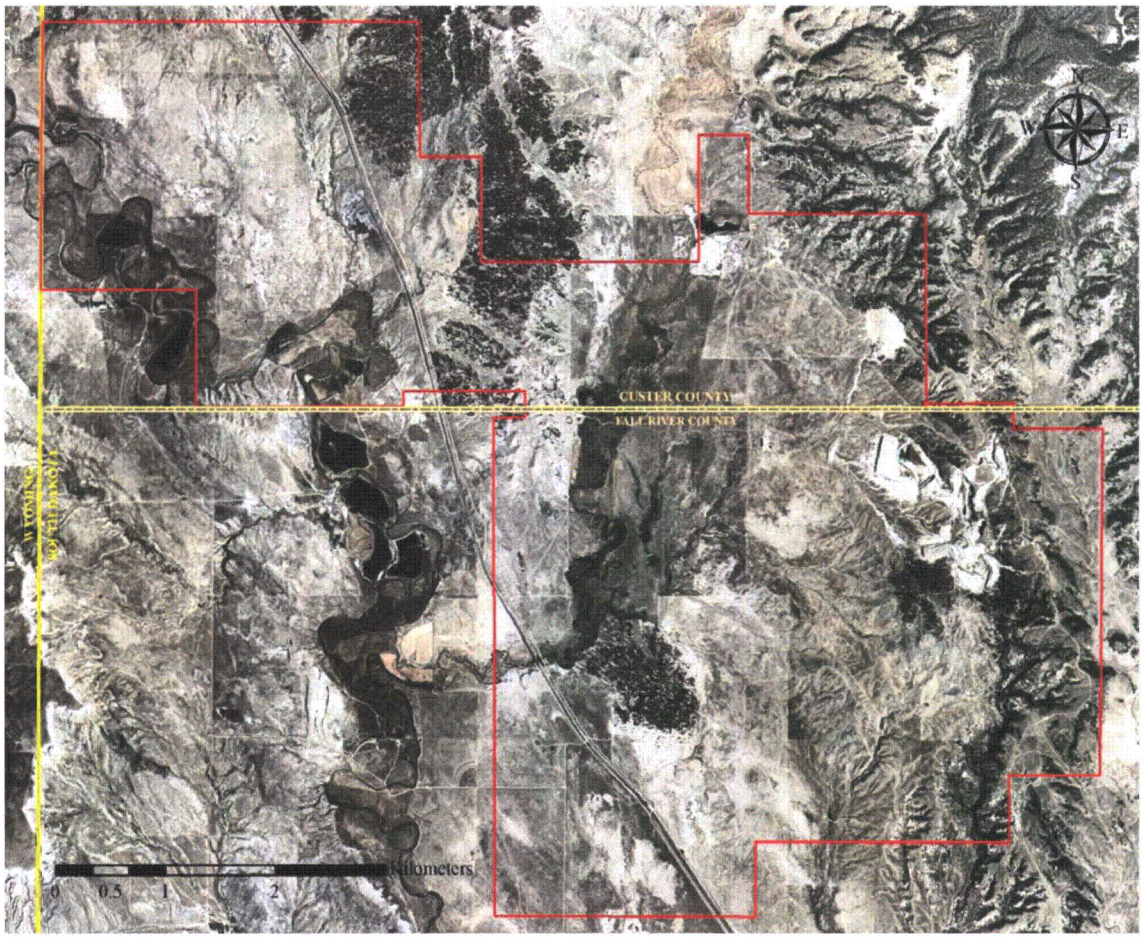

Figure 4.1. Satellite image demarcating the proposed Dewey-Burdock Uranium Project APE in Custer and Fall River counties, South Dakota (courtesy of SDGS 2006a, 2006b).

Approximately 10,310.97 ac (4,172.70 ha) were investigated by ALAC over the course of eight 10-day field sessions during the current investigation. Specific legal locations examined are provided in Table 4.5 (see Figures 4.2-4.5, below).

Table 4.5. Legal Locations of Areas Surveyed for the Dewey-Burdock Uranium Project.

USGS 7.5-minute Quadrangle	County	Township	Range	Sections
Burdock (1950 [photoinspected 1976])	Custer Fall River	6S 7S	1E 1E	27, 33-35 1-4, 9-16
Dewey (1951)	Custer	6S	1E	28-30
Twenty-One Divide (1951)	Custer Fall River	6S 7S	1E 1E	28-33 4, 9, 16

Pedestrian reconnaissance of the APE was conducted by means of parallel linear transects, maintaining distances of less than 30 m (98.43 ft) between field personnel. In certain instances, an adjustment to the survey strategy was necessary in order to allow for a more detailed examination of areas possessing higher site location potential. Such locales included surfaces or landforms in an advanced erosional state (e.g., cutbanks, blowouts, ditches, slopes, animal/vehicle trails, rodent burrows), as well as those situated upon high terraces/terrace remnants above major established waterways. Survey strategy in these locales typically involved more closely spaced transects (15-m [49.22-ft] intervals) and a focus on the inspection of erosional or burrow features, where present.

A combination of conditions in the APE at the time of the survey, such as sparse vegetation, heavily grazed pastureland, and numerous extant animal burrows (prairie dog, badger), resulted in average to good ground surface visibility throughout the majority of the project area. All surficial cultural material and features observed, as well as any topographical anomalies (e.g., depressions, mounds), were demarcated with high-visibility pin flags prior to site documentation. Initial site identification was followed by a detailed examination of the surrounding vicinity for the purpose of more accurately defining observable boundaries. Additional cultural material observed in this manner was also demarcated with high-visibility pin flags.

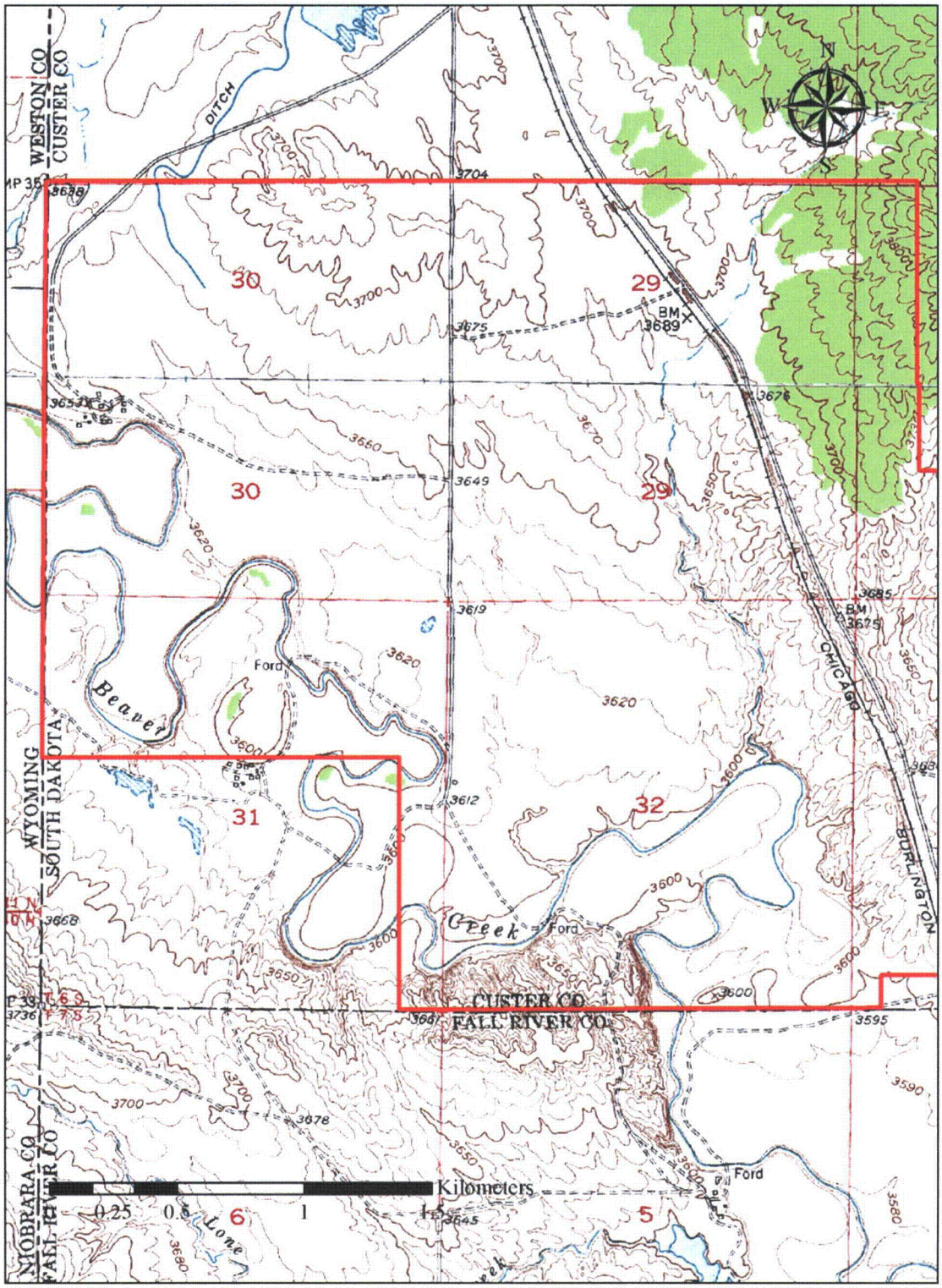

Figure 4.2. Map demarcating the northwesternmost portion of the Dewey-Burdock Uranium Project APE (USGS 7.5-minute topographic quadrangles Dewey (1951) and Twenty-One Divide (1951)).

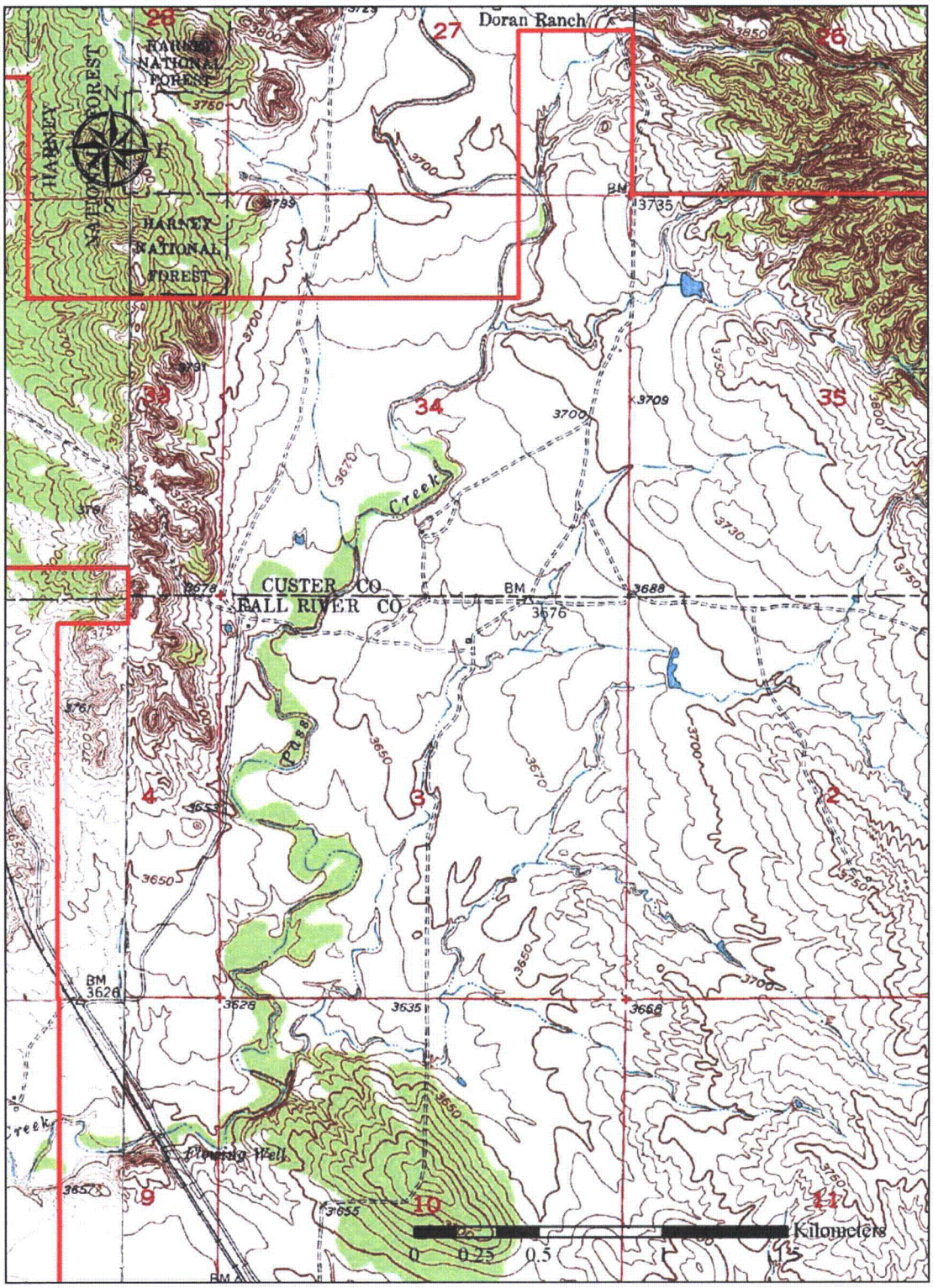

Figure 4.3. Map demarcating the north-central portion of the Dewey-Burdock Uranium Project APE (USGS 7.5-minute topographic quadrangles Burdock (1950 [photoinspected 1976]) and Twenty-One Divide (1951)).

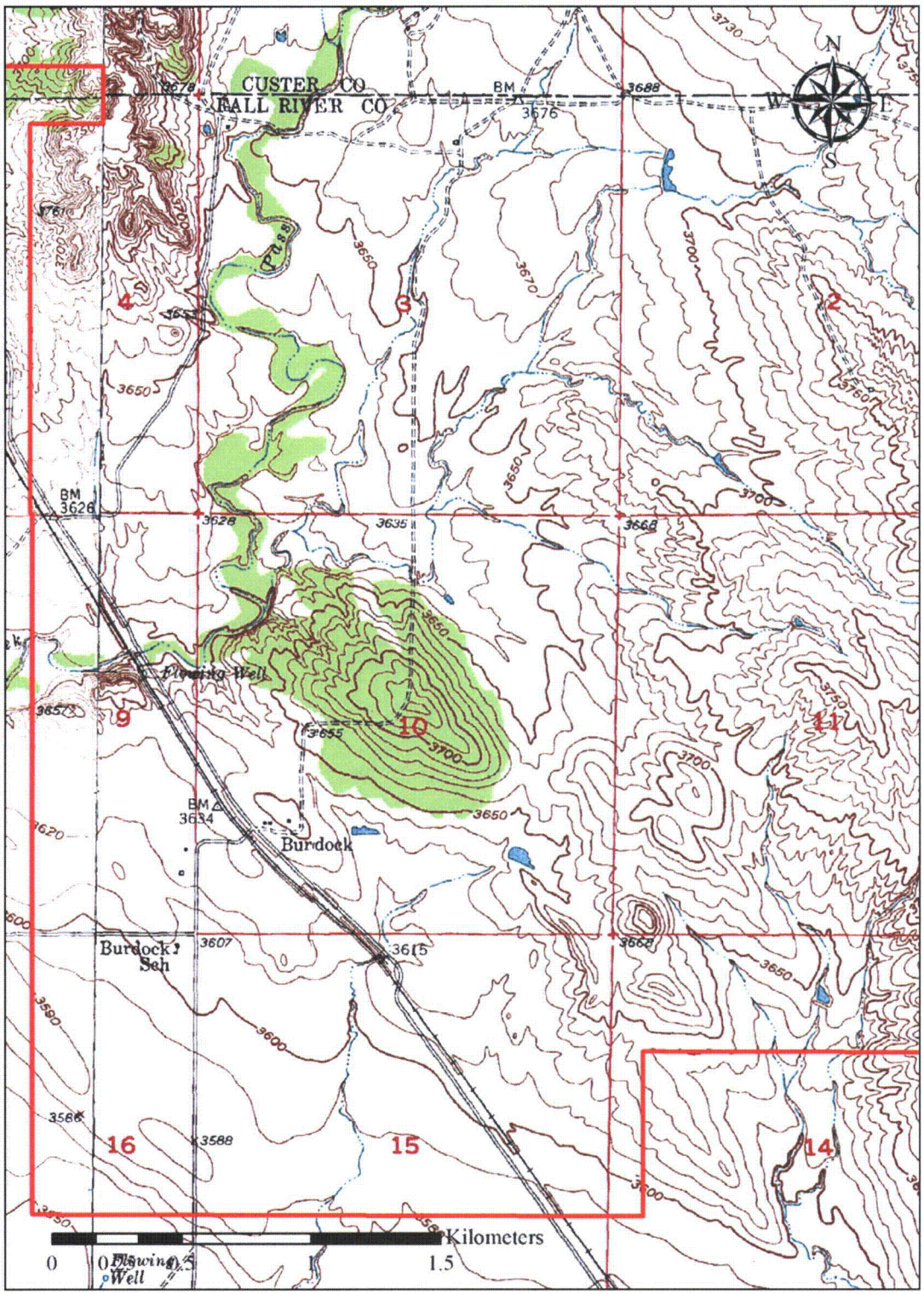

Figure 4.4. Map demarcating the south-central portion of the Dewey-Burdock Uranium Project APE (USGS 7.5-minute topographic quadrangles Burdock (1950 [photoinspected 1976]) and Twenty-One Divide (1951)).

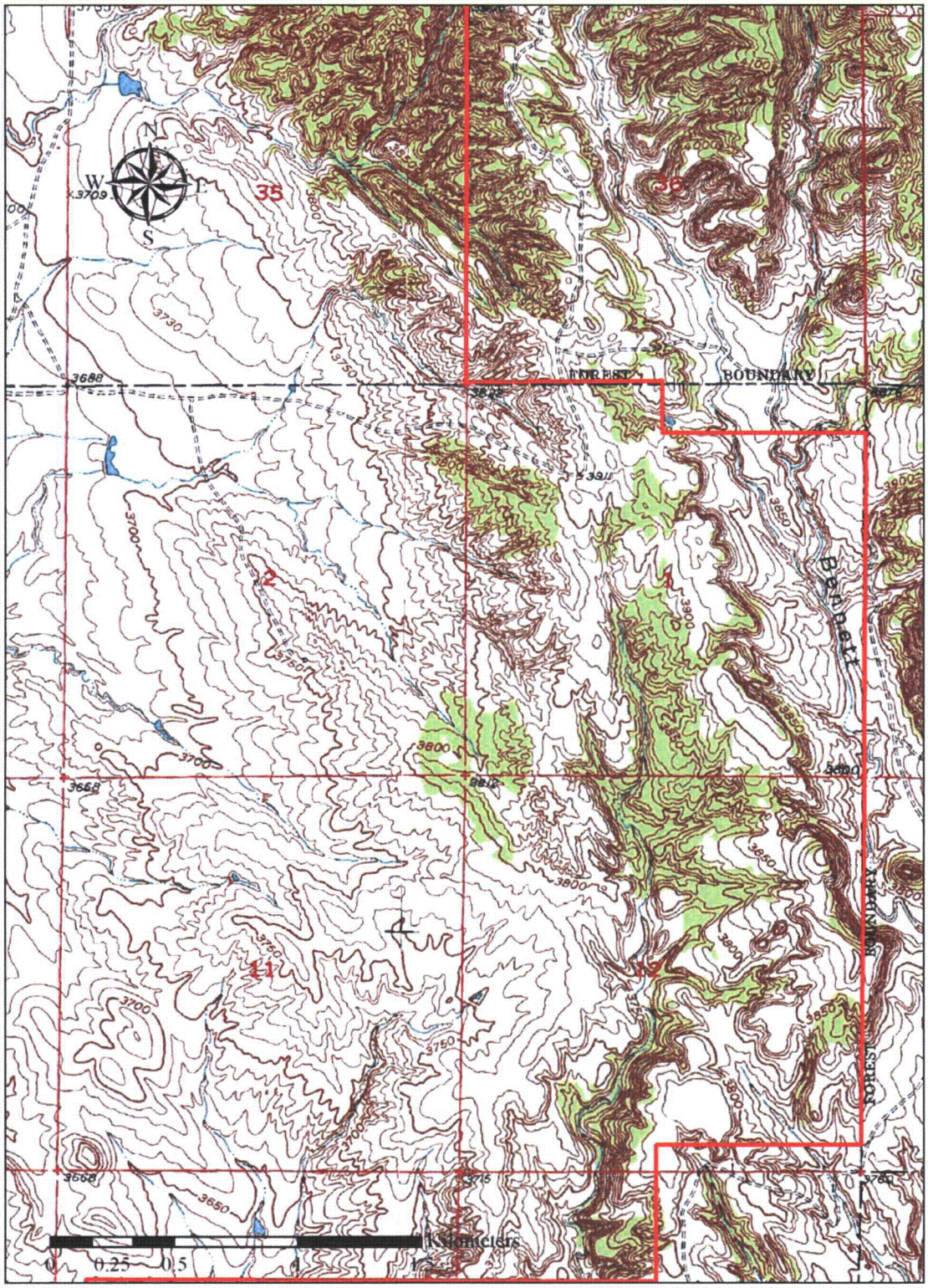

Figure 4.5. Map demarcating the easternmost portion of the Dewey-Burdock Uranium Project APE (USGS 7.5-minute topographic quadrangle Burdock (1950 [photoinspected 1976])).

4.4 DATA RECORDATION PROCEDURES

Field data for all archeological sites documented during the current investigation were recorded by means of standard methodological practices directed towards successfully addressing the research requirements. Archeological sites documented were defined as being any extant manifestations of human cultural activity having occurred prior to the calendar year A.D. 1958.

South Dakota archeological site and historic structure forms were completed for newly documented cultural resources in accordance with established state guidelines (SARC 2003; SHPO 2006) (see Appendix A and Appendix B). Updates to existing forms were prepared for those previously recorded sites that were revisited. Additionally, a National Archaeological Database (NADB) form was completed for this project (see Appendix C).

Site boundaries and locations of additional relevant site components were plotted with the use of Trimble Pro XT and Pro XRS model, differentially-corrected, sub-meter accuracy GPS units. Site locational data was obtained in this manner by utilizing the NAD83 projection. In most instances, all observed artifact material was piece-plotted individually; however, this strategy was altered during the documentation of exceptionally large site areas wherein hundreds of non-culturally diagnostic artifacts were present. When cases such as this arose, the GPS unit was used to plot only the extent of observable site boundaries, as well as any additional features, and/or temporally/functionally diagnostic tools present. In other situations, point-plotted artifacts depicted on the maps may represent more than one specimen, as numerous artifacts of the same type in close proximity (less than 50 cm apart) were recorded as a single point or concentration. This typically occurred when multiple fragments of a single artifact (such as broken fragments of a glass bottle or small bone fragments) were encountered. In certain instances, this has resulted in site maps depicting fewer numbers of artifacts than are presented in the site description. It should also be noted that due to the scale at which they are produced, the site sketch maps may not depict all point-plotted artifacts inventoried for a given site. This may result in a perceived variance between the number of artifacts listed in the inventory and the number visible on an accompanying sketch map.

Field notes describing the documented sites include: artifact inventories identifying type, modification, raw material utilized, and count; additional site feature descriptions and measurements (including features such as hearths or standing structures); field sketches of diagnostic artifacts; and general environmental descriptions of each respective site area. Diagnostic artifact material was collected for laboratory analysis, as was any sample considered to be a viable representation of artifact or material types observed at a particular site. Also collected were any specimens considered to be either unique or peculiar in their particular context. No additional material was collected during the current investigation.

Specific field data collected from each site included the following: component type; cultural affiliation; legal locations and UTM coordinates; general site description and condition; presence/description of relevant features and cultural materials; soil and nearest water source information; and preliminary NRHP evaluation status. Also documented for each site were dimensions and physiographic position. It should be noted that general site dimensions were measured off the cardinal axes and were derived directly from GIS data. In certain instances,

this has resulted in slight variations between those dimensions listed in the site descriptions and those represented on the accompanying sketch maps. Film and digital photographs were obtained for site area overviews, as well as for the majority of additional site components (e.g., features, temporally/functionally diagnostic tools, cutbank exposures).

A total of 161 previously unrecorded archeological sites were documented and 29 previously recorded sites were revisited during the current investigation. Official Smithsonian trinomial archeological site numbers were assigned to each newly documented site by Jane P. Watts, Records Manager, SARC, Rapid City. Additionally, five standing structures and one bridge structure were documented during the current investigation. Official state historic structure numbers were assigned by Jason Haug, Historic Preservation Specialist, South Dakota State Historical Society, Pierre. Descriptions of these cultural resources are presented in Chapters 5 and 6, below.

4.5 LABORATORY ANALYSIS, CATALOGING, AND CURATION METHODOLOGY

Collection of artifacts during the current archeological study was limited to those specimens capable of providing information useful in determining the cultural affiliation or function of identified sites. For Native American components, artifacts collected generally included: projectile points, retouched/utilized flakes, groundstone items, bifaces, scrapers, trade goods, and ceramics. Euroamerican materials retained include items such as ceramics, bottle glass, cans, license plates, paper documents, and bricks. The analysis is largely descriptive and does not address detailed questions related to technology, manufacturing or lithic procurement and transport. Rather, the data were collected for the purpose of addressing the more mundane questions concerning site cultural affiliation and function, as well as to provide a basic descriptive dataset.

Cataloging and analysis of the recovered sample were completed by John R. Bozell at the ALAC facility in Sioux Falls during the late fall and early winter of 2007. The collected sample is being cataloged and prepared for permanent curation according to standards set forth in the 2006 South Dakota Archaeological Research Center "Requirements for Submitting a Collection to the Archaeological Research Center," and by BLM cataloging standards. The complete artifact inventory is provided in Appendix E.

Data collected for stone tools consist of a series of standardized measurements, as well as raw material type, and form classifications. Measurements for projectile points (Figure 4.6) and endscrapers (Figure 4.7) were abstracted from various procedures developed by Ahler and his colleagues over several decades for use with chipped stone assemblages recovered from the Northern Plains and Middle Missouri research areas (see for example Ahler 1975; Ahler and Toom 1993; Gregg 1987; and Root et al. 2001). The bifacial tools and retouched/utilized flakes were simply measured by length, width, and thickness. Raw material types were determined using comparative samples curated by ALAC, in conjunction with published information on Black Hills regional lithic types (Church 1999 and Miller 1991). Only a handful of native-made ceramic body sherds were recovered, and description of these was limited to width, thickness, paste, and temper. The color of all ceramics and stone tools was established utilizing Munsell® Rock Color Charts (Goddard et al. 1984). Stone tool measurements, form, color, and raw material data are provided in tabular format in Appendix E.

The recovered Euroamerican artifact sample, which is affiliated with the late nineteenth century and more often the early and mid-twentieth century, was also treated descriptively. Verification of general time frame for recovered Euroamerican artifacts was accomplished by consulting a variety of published sources such as Kovel and Kovel (1953) for ceramics and Fike (1987), Nowak (1985), and Wilson (1981) for bottles, as well as reprints of 1890s Sears and Roebuck (Schroeder 1970) and Montgomery Ward (Schroeder 1977) catalogs.

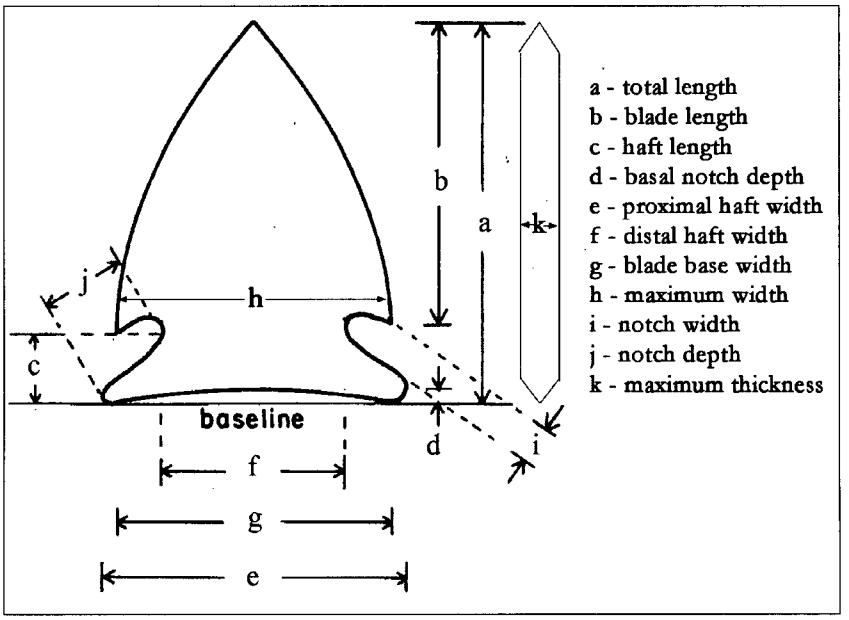

Figure 4.6. Measurements taken for recovered projectile points (adapted from Ahler 1975).

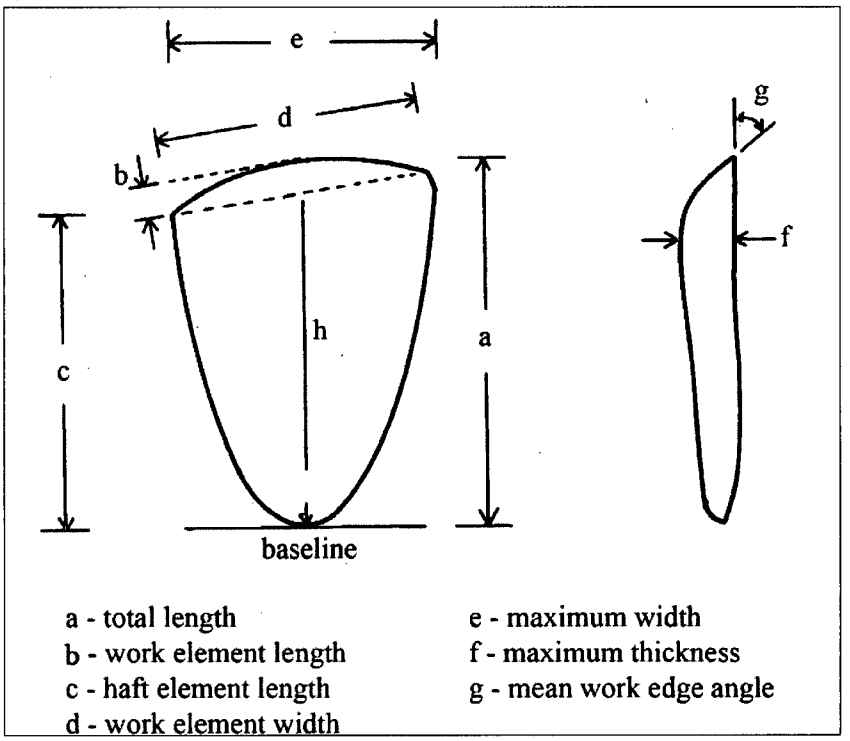

Figure 4.7. Measurements taken for recovered scrapers (adapted from Ahler 1975).