2. Discharge Piping – Enhance Isolation From Accumulators & Replace Check Valves

A. Replace 10 AOVs in the test line on the accumulator side with Anchor Darling Manual Valves

B. Replace all 4 SI Check Valves

C. Replace another 9 AOVs, and install 37 Manual Isolation Valves for Test Optimization Modifications and To Add Barriers to Enhancement Isolation (6 isolation valves in between Accumulator and ECCS Lines in most cases)

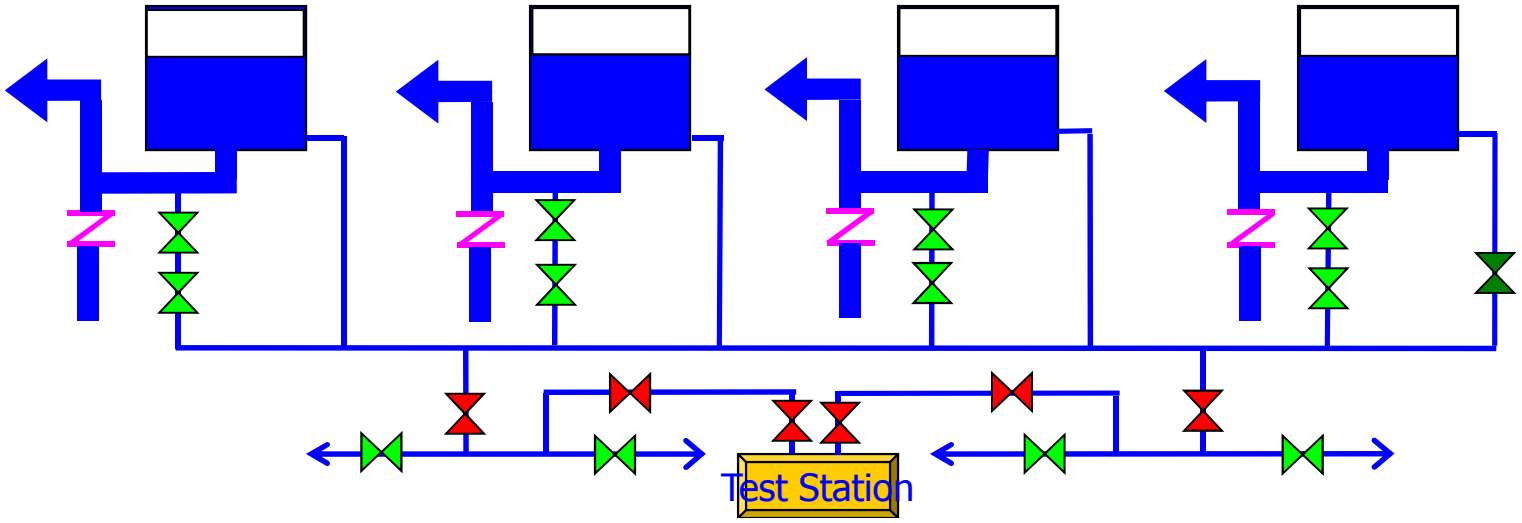

2- A: AOV Replacement - before

(e.g., Accumulator Side AOV Replacement)

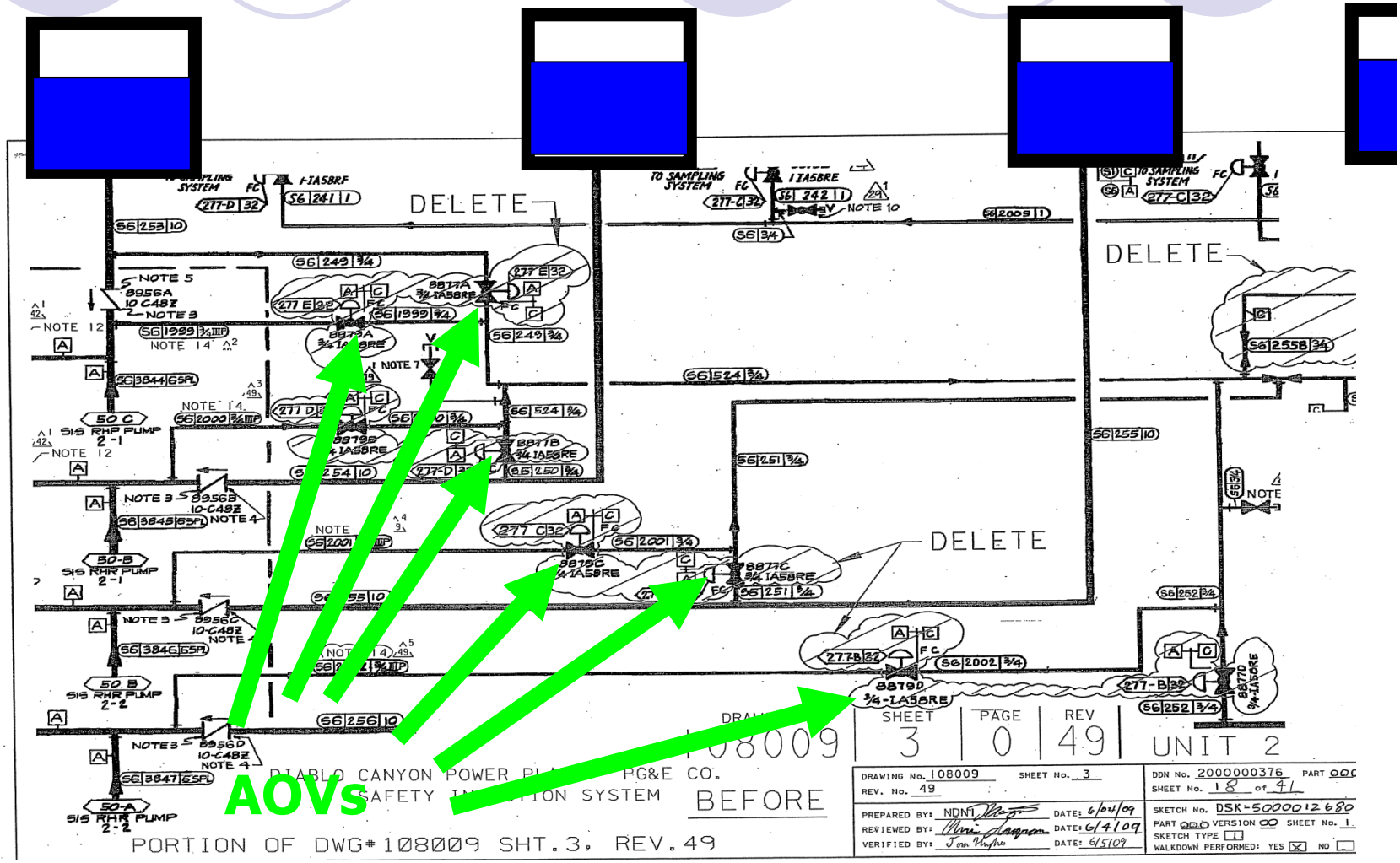

2- A: AOV Replacement - after

(e.g., Accumulator Side AOV Replacement)

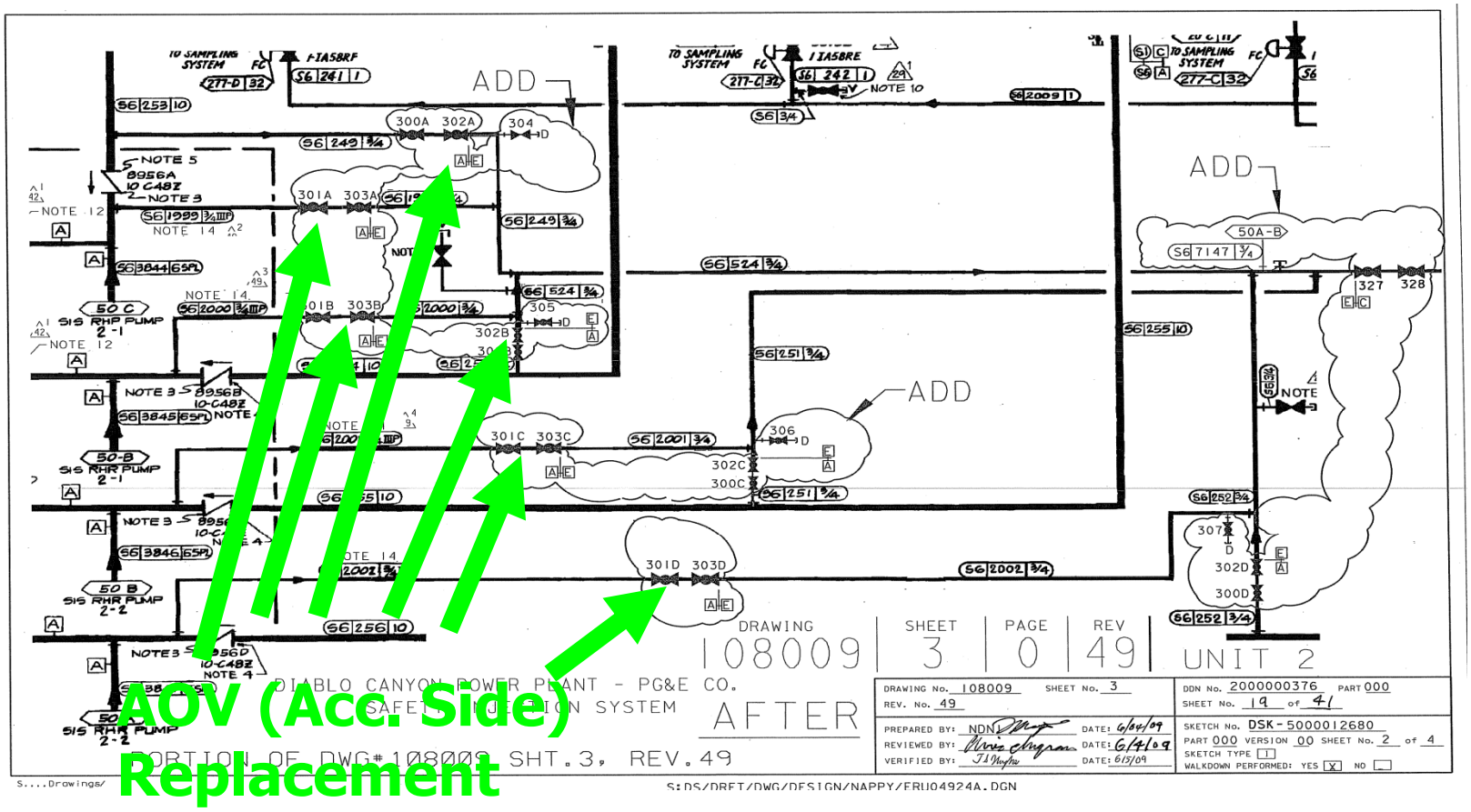

Old

8877C & 8879C

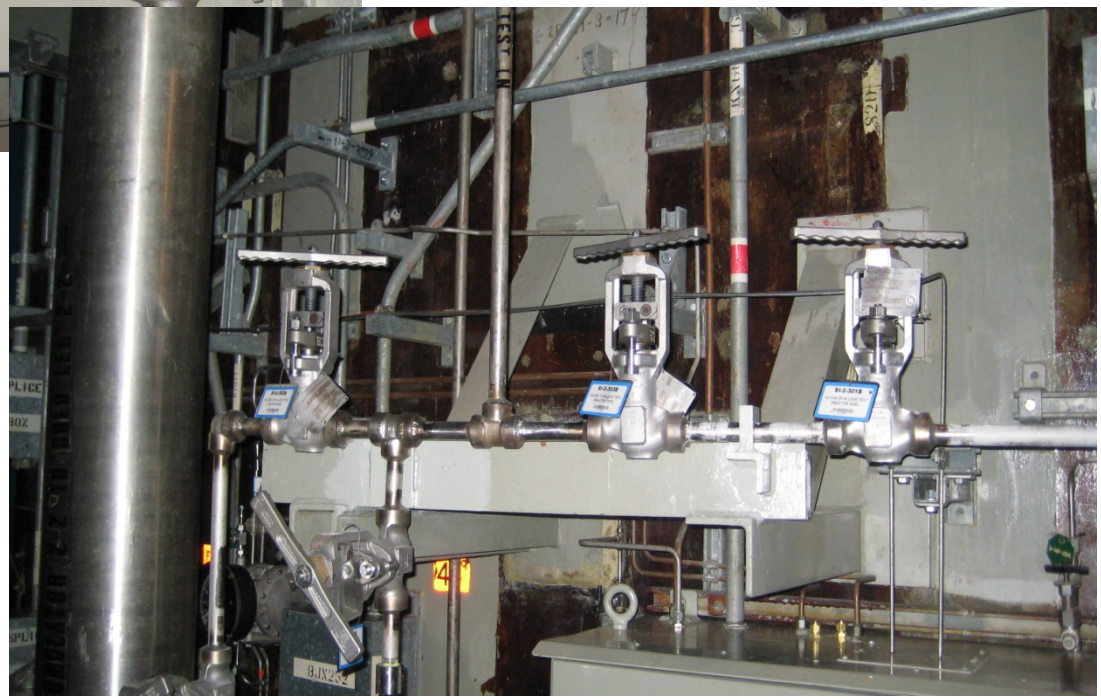

New – 4 each manual valves with drain add

2-B: Increase Leakage Barriers

(e.g., ECCS Test Header Modification)

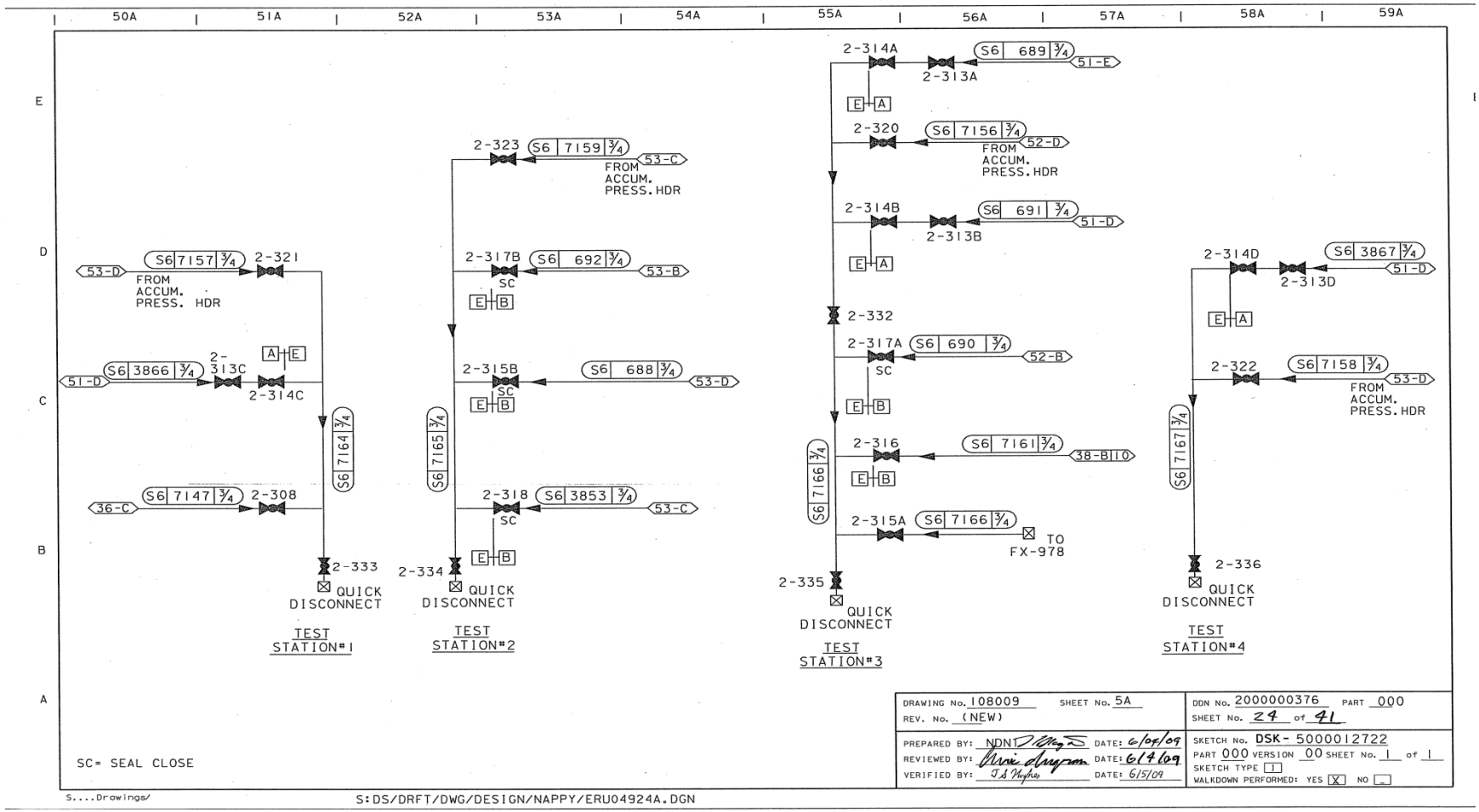

Test Station #2

3. Dynamic Flushing (Fr > 2.0)

- ECCS Injection Lines High Points Are Drained During Mid-Loop
- Most Voids Are Filled by Vacuum Refill, But Some Voids Are Trapped Upstream of Check Valves

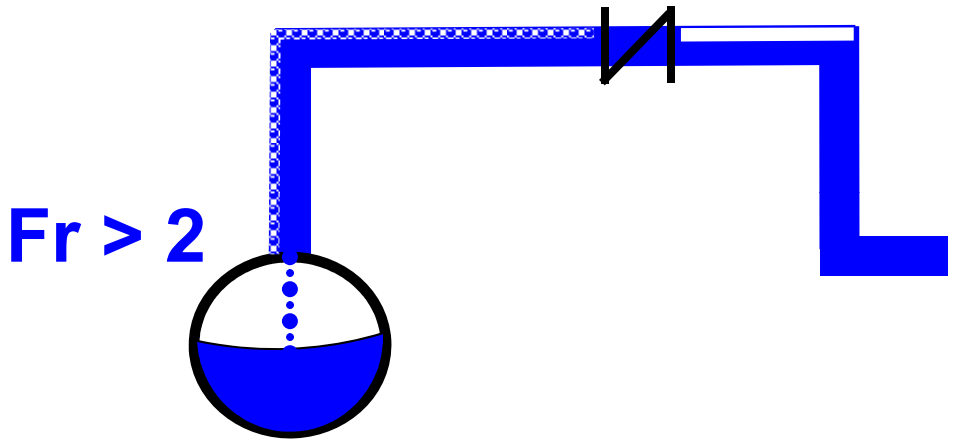

- RHR Discharge Lines: Fr > 2.0
- CCP & SIP Injection Lines: Fr > 6.0
- RHR Heat Exchanger: Fr > 6.0

Cal Poly Senior Project
- Void Recirculation Loop

- Passive – Uses Eductive Force
- Reduces Void Fraction to the Pump

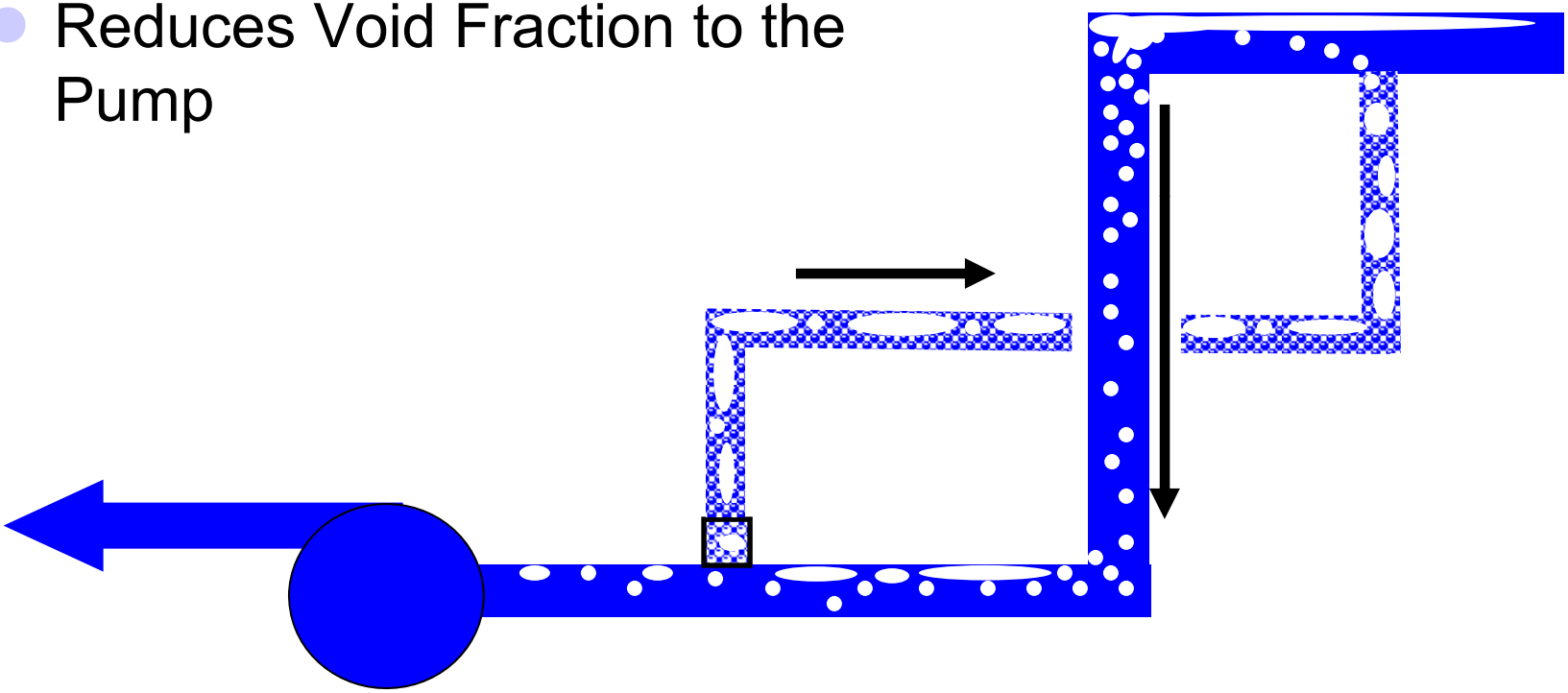

Cal Poly Senior Project – Void Recirculation Loop

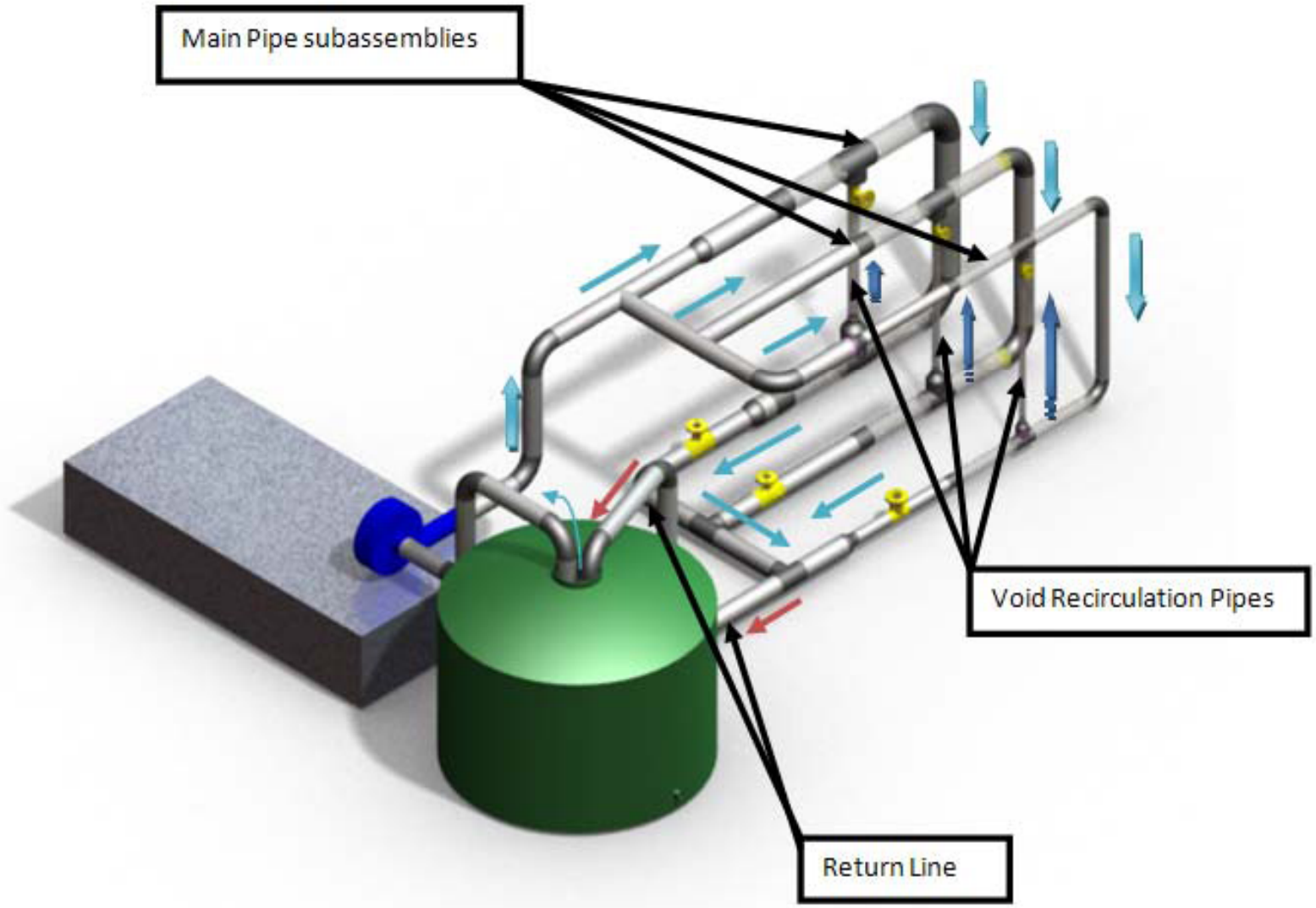

Cal Poly Senior Project – Void Recirulation Loop