PWROG Gas Transport Preliminary Data Evaluation

Westinghouse Electric

Stephen Swantner

January 21, 2010

Purpose

- Compare data collected at Purdue University with PWROG proposed Simplified Equation

Data Review

- The following data sets from PWROG project were used in this comparison
  - 6 inch and 8 inch (WCAP-16631)
    - Restricted to data formally issued to PWROG
  - 5% and 10% initial void fractions
    - Most closely represent applications
  - Void Fraction Measurements at 3 locations
    - Vertical piping below kinematic shock
      - AIMP2 and AIMP4
    - Horizontal Piping at bottom of loop (RIMP2)

Limitations of Use

- Comparison was funded by PWROG to support this meeting
- Effort is a prelude to an approved 2010 PWROG program
- Deliverables have not been formally documented and verified
- Provide a preliminary indication of benefits achieved by proposed program

Westinghouse Electric Co

6 inch Test Loop P&ID

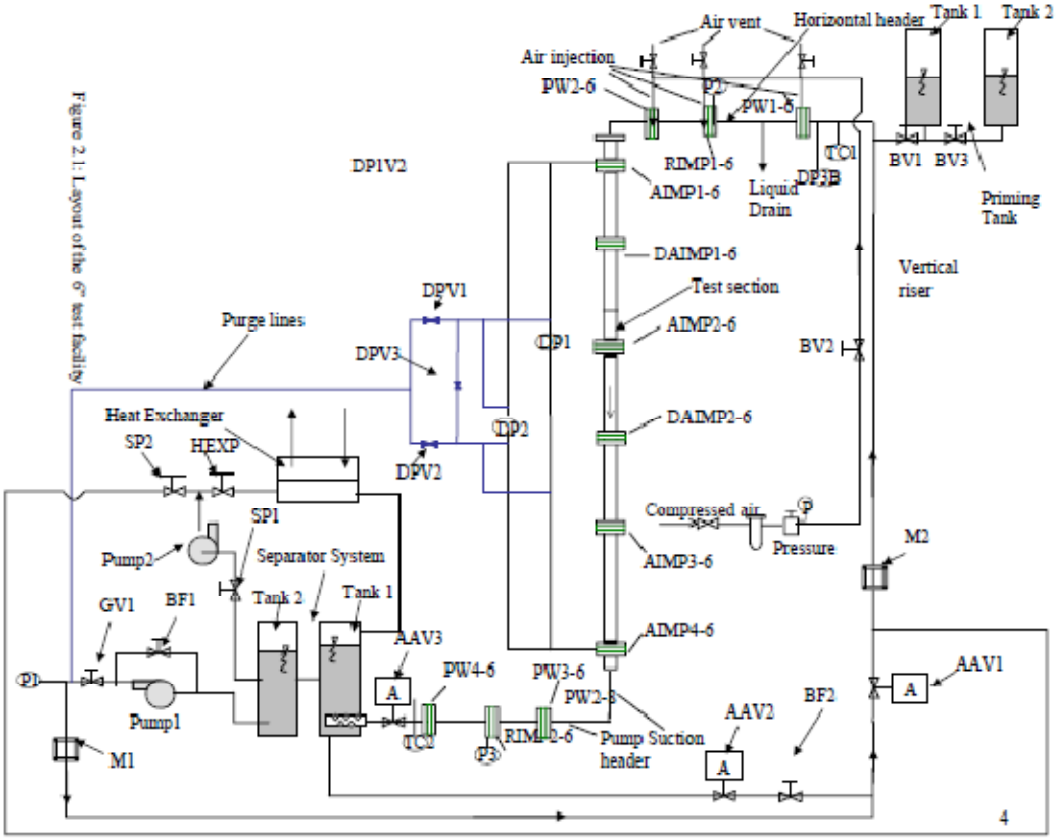

Figure 2.1: Layout of the 6" test facility

Westinghouse Electric Co

6 inch Test Loop Isometric

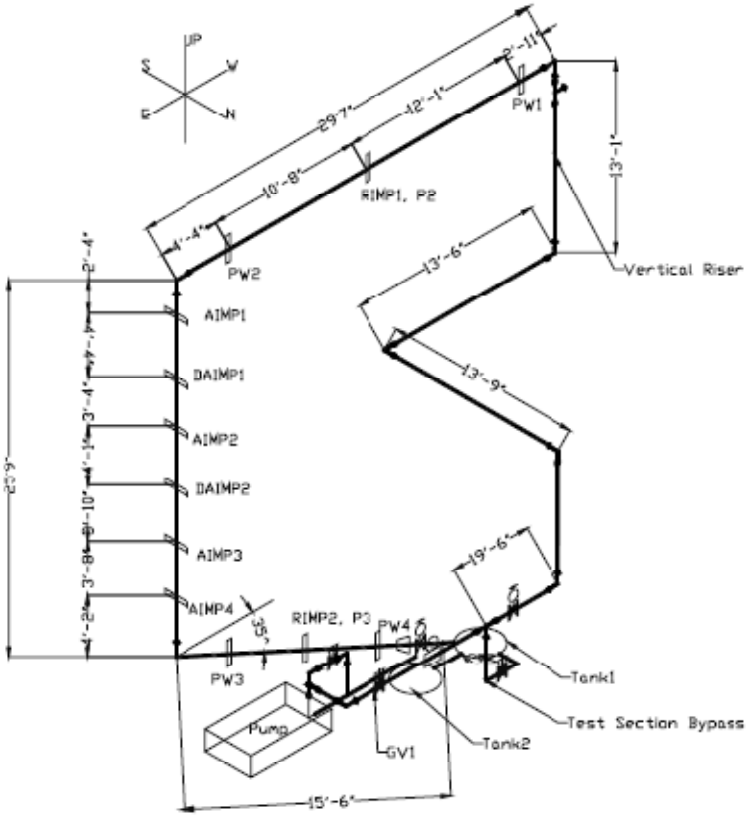

Westinghouse Electric Co

8 inch Test Loop Isometric

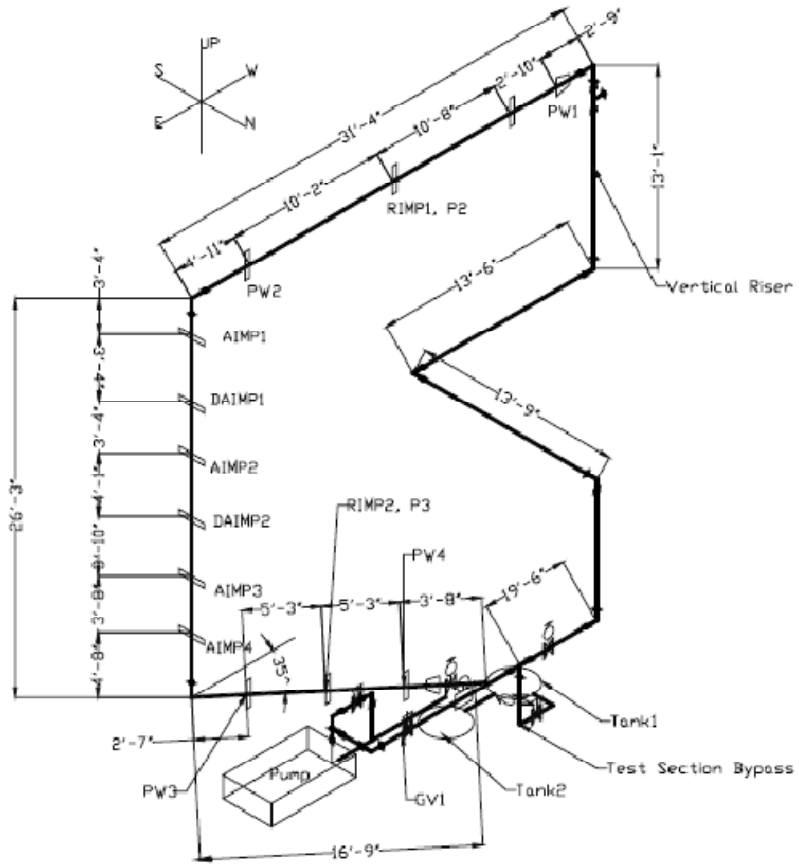

Data Review

- Initial void fractions of 5% and 10% were evaluated
- These void fractions were set at atmospheric pressure
- Top test header depressurized from 0 psig to -8 psig at start of test
- Effective void fractions increased to 11% and 22%, respectively

Simplified Equation

- Equation relates the gas volume at the top high point (V_{GT}) with
  - void fraction at the bottom location (α_B),
  - flow rate (Q),
  - transport time (Δt),
  - and static pressures at the bottom (P_B) and top (P_T) locations.

$$V_{GT} = \alpha_B \; Q\left(\Delta t\right)\frac{P_B + 14.7}{P_T + 14.7}$$

Application to Purdue Tests

- Predict void fraction at the bottom location (α_B) based on the following measured parameters
  - Initial gas volume (V_{GT}),
  - flow rate (Q),
  - transport time (Δt),
  - static pressures at bottom (P_B) and top (P_T)

$$\alpha_B = \frac{V_{GT}}{Q\left(\Delta t\right)} \frac{P_T + 14.7}{P_B + 14.7}$$

Westinghouse Electric Co

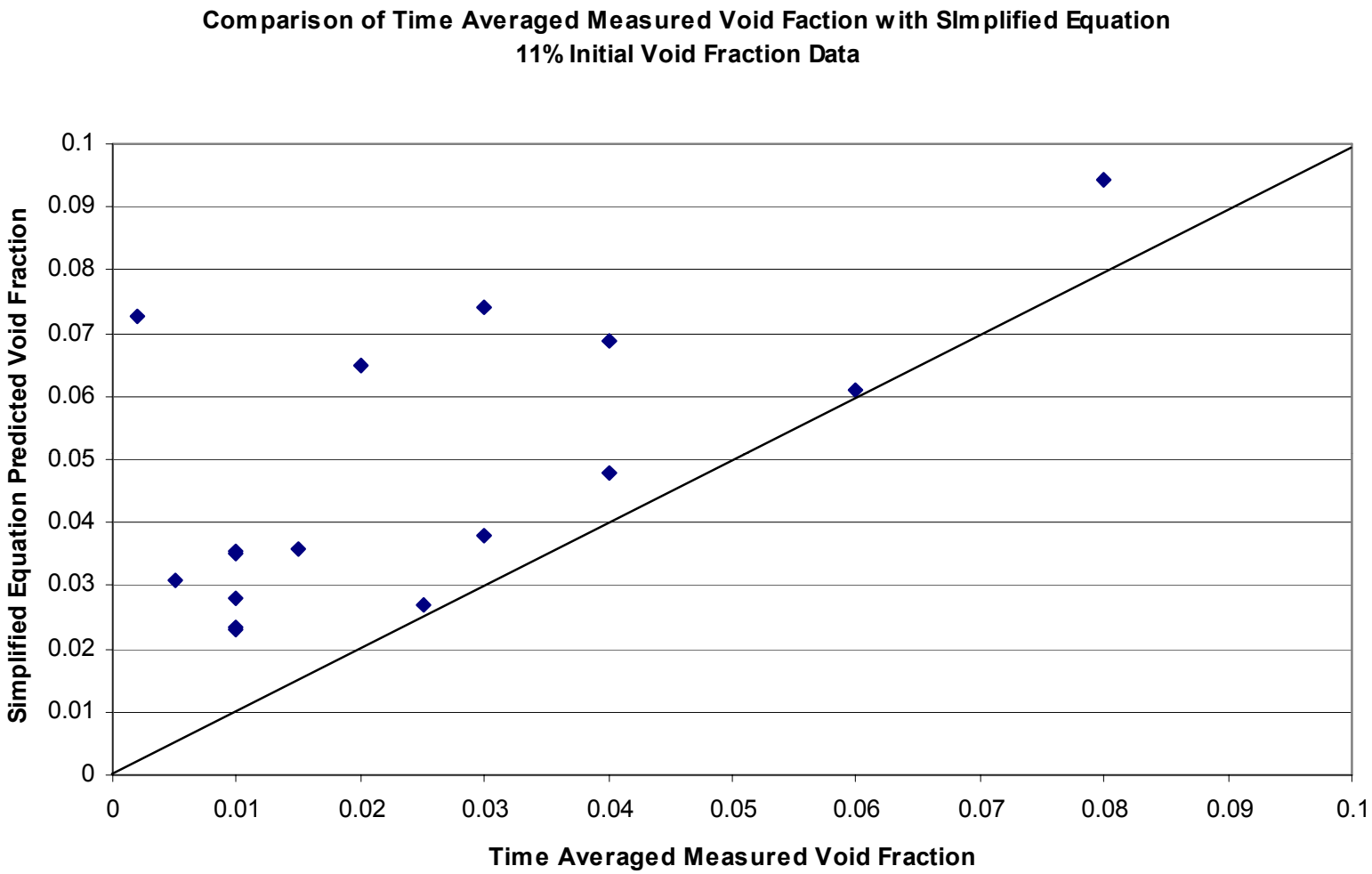

Westinghouse Electric Co

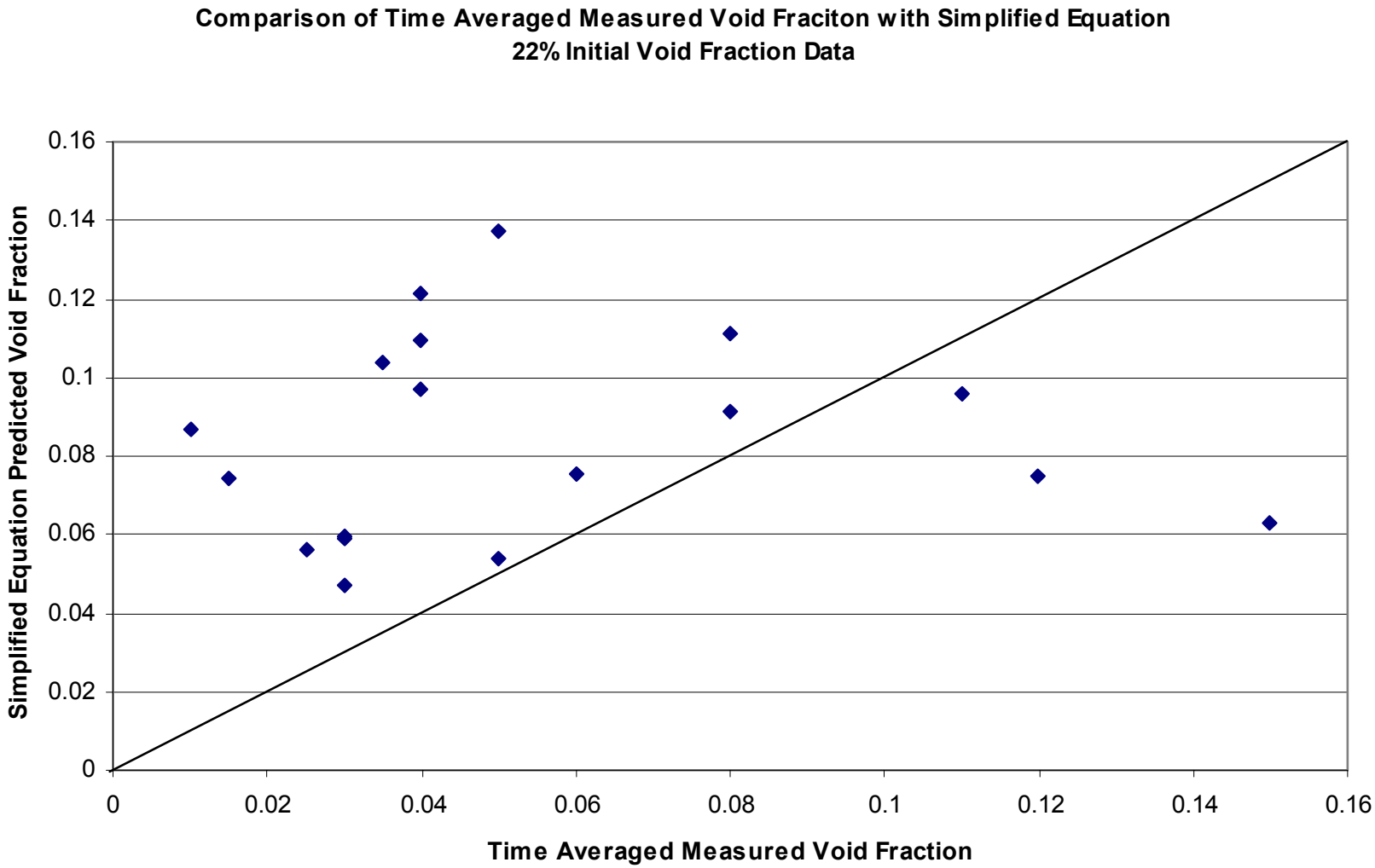

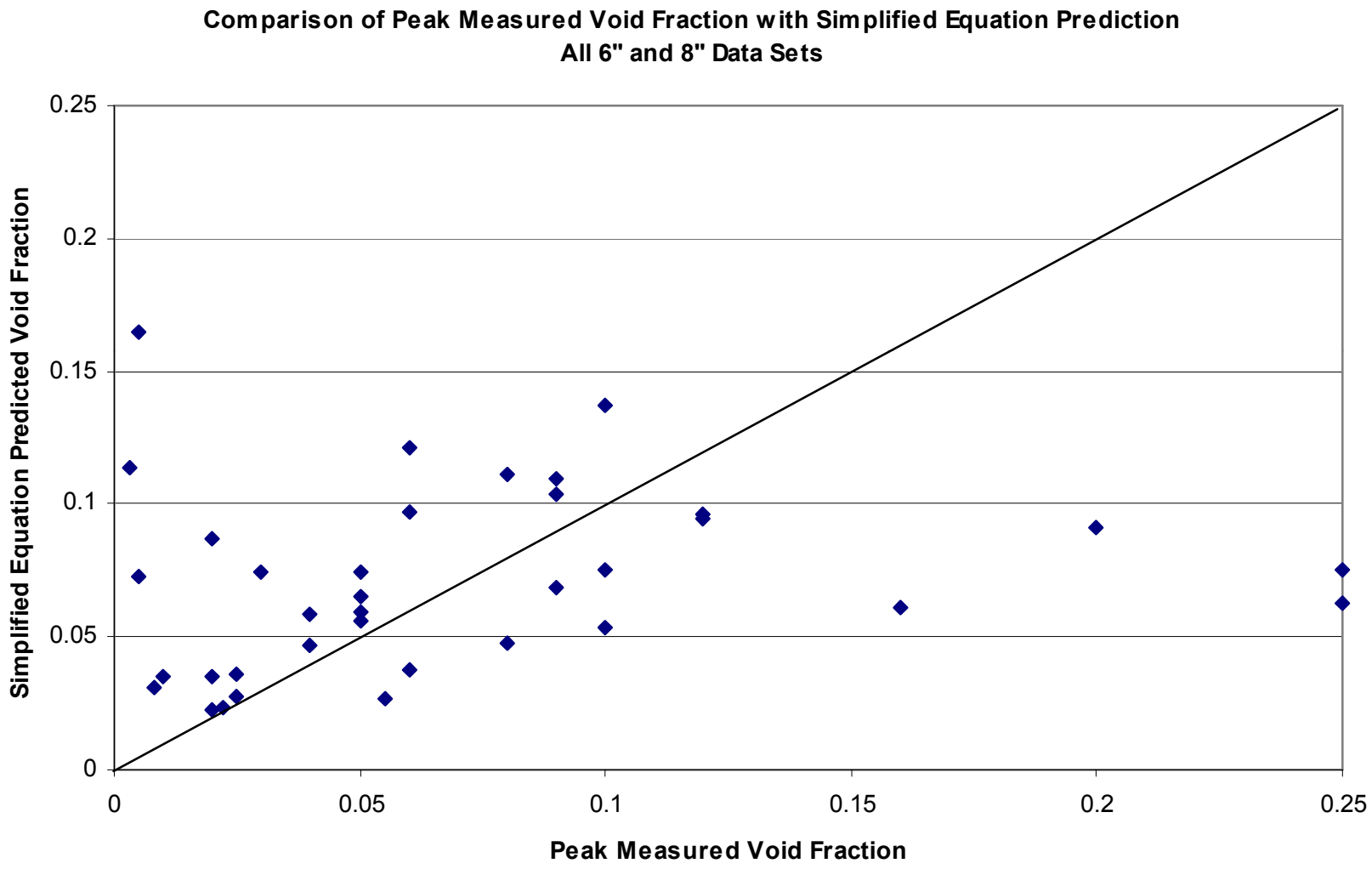
Comparison of Peak Measured Void Fraction with Simplified Equation Prediction
All 6" and 8" Data Sets
Simplified Equation Predicted Void Fraction
Peak Measured Void Fraction
0
0.05
0.1
0.15
0.2
0.25

Summary and Preliminary Conclusions

- Applicable data sets (11% and 22% initial void fraction) from Purdue University TRSL 6 inch and 8 inch tests were reviewed
- Preliminary indication is that Simplified Equation is a valid model for predicting average void fraction within intended range of use ($\leq$ 10% void fraction)
- Within this range of use there is not a large variation between average and peak void fractions
- A 2010 PWROG project has been approved to perform a detailed comparison between the Simplified Equation and data collected at Purdue University TRSL