030-29464

UNIVERSAL
SECURITY INSTRUMENTS, INC.

FAX: 1-301-415-5369

Division of Industrial and Medical Nuclear Safety
Office of Nuclear Material Safety and Safeguards
U.S. Nuclear Regulatory Commission
Mail Stop T-8F3
11545 Rockville Pike
Rockville, MD 20852

February 26, 2010

Attn: Mr. Bruce Carrico and Mr. Nima Askeboussi

Subject: Amendment of U.S. NRC Radioactive Materials License #19-23643-01E and S.S.D.R. #NR-0657-D-101-E

Dear Sirs:

As a follow up to my last revisions (address change) to my U.S. NRC Radioactive Materials License #19-23643-01E and S.S.D.R. #NR-0657-D-101-E; I am inquiring about the previous letter request dated October 3, 2008 (see attachment).

I'm used to having "NRC Engineering evaluations" taking up to a year, but since we are presently in Underwriters Laboratories testing / listing projects utilizing the alternate radioactive source, NRD LLC Model A-001 (mounted in source holder A-1056), manufactured by NRD, LLC, 2937 Alt Boulevard North, Grand Island New York; time has become of the essence.

Please review my attached letter and advise me of the status, as soon as possible.

Sincerely,

Stephen F. Babinec
Radiation Officer/ Engineering
Universal Security Instruments, Inc.
(P) 410-363-3000 X214
(F) 410-363-2218
E-mail steveb@universalsecurity.com

022808

Español | Customer Support | FedEx Locations Search Go

Package/Envelope Freight Expedited Office/Print Services

Ship Track Manage Business Solutions

Detailed Results

Printer-Friendly Get Link Help

Enter tracking number

Detailed Results | Notifications

Tracking no.: 848805918290 Select time format: 12H | 24H E-mail notifications

Delivered

Initiated Picked up In transit Delivered

Delivered
Signed for by S KNUTH

Shipment Dates	Destination
Ship date Oct 3, 2008	ROCKVILLE, MD
Delivery date Oct 6, 2008 8:49 AM	Signature Proof of Delivery

Shipment Facts

Help

Service type Priority Overnight

Shipment Travel History

Help

Select time zone: Local Scan Time

All shipment travel activity is displayed in local time for the location

Date/Time	Activity	Location	Details
Oct 6, 2008 8:49 AM	Delivered	ROCKVILLE, MD	

Global Home | Small Business Center | Service Info | About FedEx | Investor Relations | Careers | fedex.com Terms of Use | Privacy Policy | Site Map
This site is protected by copyright and trademark laws under US and International law. All rights reserved. © 1995- 2010 FedEx

UNIVERSAL
SECURITY INSTRUMENTS, INC.

October 3, 2008

US Nuclear Regulatory Commission
Attention: Nima Ashkeboussi / Thomas Herrera
Mail Stop T-8F3
11545 Rockville Pike
Rockville, MD. 20852

Dear Mr. Ashkeboussi:

As a follow-up to our phone conversation 3 weeks ago, in reference to my request for amending NRC License No. 19-23643-01E and Registration Certificate No. NR-0657-D-101-E, to (1) allow the alternate use of the NRD LLC Model A-001 sealed source mounted in holder assembly A-1056, manufactured by NRD, LLC, 2937 Alt Boulevard North, Grand Island, New York; and also (2) to revise the "SS-770 Series Source Chamber Assembly" (used in Universal Security Instruments, Inc. ionization type smoke alarms); to increase the "signal to noise ratio" and reduce operational false alarms.

As I also related, The NRD, LLC Model A-001 Americium 241 sealed source has an ISO 2919 classification code number ISO\ C 32222 , acceptable for smoke alarm usage.

The "Source Chamber Mid Contact Plate" has been made circular and larger in surface area, and the plastic "Source Holder Base" has been revised to have a side extension to retain the source chamber mid contact plate in place, and to add a third plastic PCB latch for stability.

None of the above changes should affect the original safety evaluation of the product.

I am also enclosing drawings relating to the above sealed source chamber assembly:

a. SS-770 Series Source Chamber Assembly (NRC Device Security) 2 Pages
b. NRD A-1056 Assembly / A-001 Source Element / NRD Dwg. No. 05B052
c. NRD A-001 Foil General Composition and IAEI Certificate of Competent Authority
d. Source Contact / Universal Part No. 011-0161-00
e. Source Chamber Mid Contact Plate / Universal Part No. 011-0160-01
f. Source Chamber Cover / Universal Part No. 011-0159-01
g. Source Chamber Base / Universal Part No. 011-0158-01

If there is any other information needed please contact me.

Sincerely,

Stephen F. Babinec
Radiation Officer/ Engineering
Universal Security Instruments, Inc.
(P) 410-363-3000 X214
(F) 410-363-2218
E-mail steveb@universalsecurity.com

200

FedEx Express US Airbill

FedEx Tracking Number 8488 0591 8290

Sender's Copy

1 From Please print and press hard

Date 10/3/08 Sender's FedEx Account Number 0212-0651-2

Sender's Name STEVE BABINEC Phone (410) 363-3000 X214

Company UNIVERSAL SECURITY INSTRUMENTS

Address 7 GWYNNS MILL CT STE A

Dept/Floor/Suite/Room

City OWINGS MILLS State MD ZIP 21117-3528

2 Your Internal Billing Reference

3 To

Recipient's Name NIMA ASHKEBOUSSI Phone (301) 415-7138

Company U.S. NUCLEAR REGULATORY COMM

Recipient's Address MAIL STOP T-8F3

Address 11545 ROCKVILLE PIKE

City ROCKVILLE State MD ZIP 20852

4a Express Package Service — Packages up to 150 lbs.

- [X] FedEx Priority Overnight
- [ ] FedEx Standard Overnight
- [ ] FedEx First Overnight
- [ ] FedEx 2Day
- [ ] FedEx Express Saver

FedEx Envelope rate not available. Minimum charge: One-pound rate

4b Express Freight Service — Packages over 150 lbs.

- [ ] FedEx 1Day Freight*
- [ ] FedEx 2Day Freight
- [ ] FedEx 3Day Freight

* Call for Confirmation

5 Packaging — * Declared value limit $500

- [ ] FedEx Envelope*
- [X] FedEx Pak*
- [ ] FedEx Box
- [ ] FedEx Tube
- [ ] Other

6 Special Handling — Include FedEx address in Section 1

- [ ] SATURDAY Delivery Available ONLY for FedEx Priority Overnight, FedEx 2Day, FedEx 1Day Freight, and FedEx 2Day Freight to select ZIP codes
- [ ] HOLD Weekday at FedEx Location NOT Available for FedEx First Overnight
- [ ] HOLD Saturday at FedEx Location Available ONLY for FedEx Priority Overnight and FedEx 2Day to select locations

Does this shipment contain dangerous goods? One box must be checked

- [X] No
- [ ] Yes As per attached Shipper's Declaration
- [ ] Yes Shipper's Declaration not required
- [ ] Dry Ice Dry Ice, 9, UN 1845 ____ kg
- [ ] Cargo Aircraft Only

Dangerous goods (including Dry Ice) cannot be shipped in FedEx packaging.

7 Payment Bill to: Enter FedEx Acct. No. or Credit Card No. below

- [X] Sender Acct. No. in Section 1 will be billed
- [ ] Recipient
- [ ] Third Party
- [ ] Credit Card
- [ ] Cash/Check

FedEx Acct. No. Credit Card No. Exp. Date

Total Packages 1 Total Weight Total Declared Value† $ ___ .00

†Our liability is limited to $100 unless you declare a higher value. See back for details. FedEx Use Only

8 Sign to Authorize Delivery Without a Signature

By signing you authorize us to deliver this shipment without obtaining a signature and agree to indemnify and hold us harmless from any resulting claims.

466

NO POUCH NEEDED. See back for peel and stick application instructions.

PULL AND RETAIN THIS COPY BEFORE AFFIXING TO THE PACKAGE.

Try online shipping at fedex.com

By using this Airbill you agree to the service conditions on the back of this Airbill and in our current Service Guide, including terms that limit our liability.

Questions? Visit our Web site at fedex.com or call 1.800.GoFedEx 1.800.463.3339.

0283287417

005/014

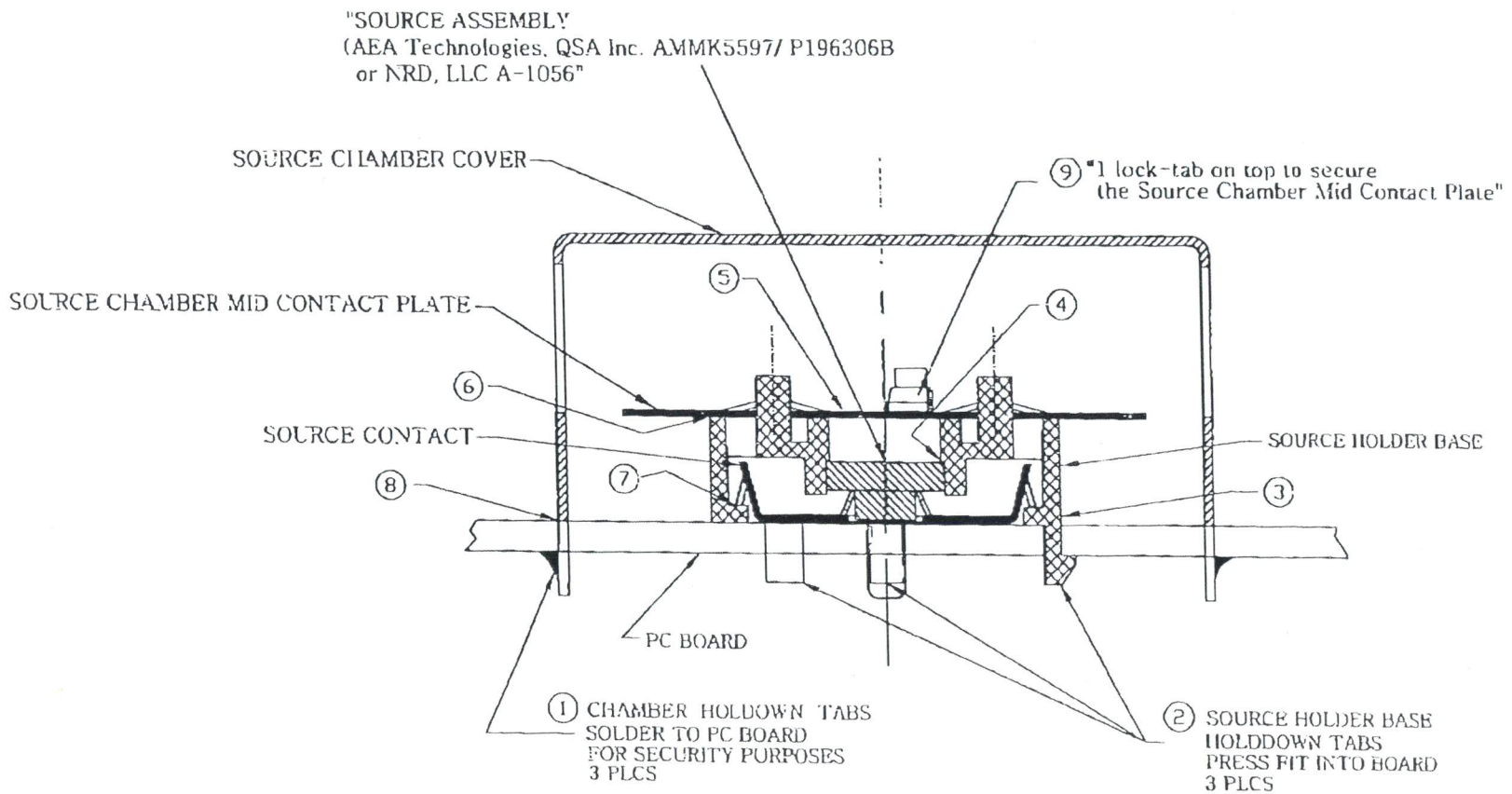

SS-770 Series Source Chamber Assembly
(NRC Device Security)

USI
02/26/2010 19 36 FAX 4103632218

SS-770 SERIES SOURCE CHAMBER ASSEMBLY

1. Source chamber cover is soldered to printed circuit board in three places.

2. Source holder base (3) tabs are press fit into the printed circuit board.

3. Source holder base fits flush (no space) to printed circuit board after press fit, Item #2 above.

4. Source element has no space between its top and "inner ring fit" of source holder base.

5. Source chamber mid-contact plate is flat across its full length after it has been press fit onto the source holder base.

6. No space between source chamber mid-contact plate and source holder base.

7. Four tabs of source contact lock into source holder base.

8. Source chamber cover is flush with printed circuit board after smoldering.

9. Lock tab secures the source chamber mid-contact plate.

007/014
USI
02/26/2010 19 37 FAX 4103632218

REVISIONS						
REV	DATE	ZONE	DESCRIPTION	AUTH	DR	CK

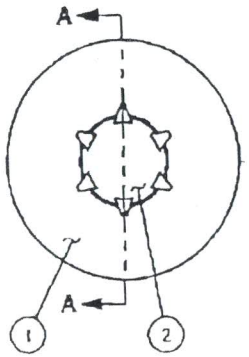

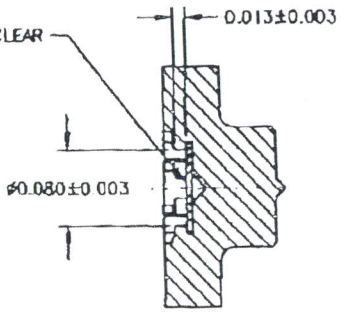

SECTION "A-A"

NOTES:

1. MODEL A-001 Am-241 SOURCE ø3/32 (ø0.092)
   CONTENT: 0.77 µCi ±16% AT 0.99 CONFIDENCE INTERVAL
   PLATING: WHITE GOLD
2. CRIMPED TABS SHOULD HOLD FOIL FIRMLY TO THE BOTTOM OF THE FOIL CAVITY.
3. CRIMPED SURFACES SHOULD BE FREE OF CRACKS OR FLAWS.
4. SOURCE SURFACE MAY BE DISTORTED BUT NOT RUPTURED BY STAKING.

ITEM	QTY.	DESCRIPTION	D/N, SIZE
2	1	A-001 SOURCE	88A011
1	1	SOURCE HOLDER 1056	858026

SIGNATURES	DATE
C. DUBIN	12/9/05
CAPPARELLA	12/9/05
S.K. OLSSON	12/6/05

THIRD ANGLE PROJECTION

DO NOT SCALE PRINT

NRD, LLC
2937 ALT BOULEVARD
GRAND ISLAND, NEW YORK 14072

A-1056 ASSEMBLY
A-001 MOUNTED SOURCE

SEE NOTES

SIZE	DATE	SCALE	DWG NO	REV
B	12/9/05	NA	05B052	

NRD

02/26/2010 19:37 FAX 4103632218 USI

NRD

DATE	SYM	REVISION RECORD	AUTH.	DR.	CK.

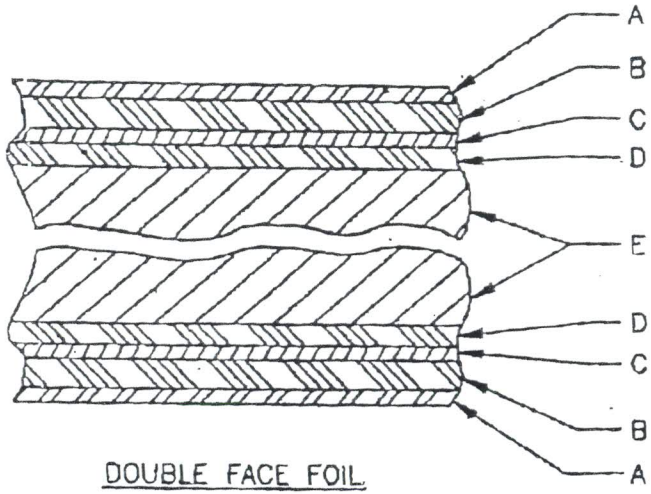

DOUBLE FACE FOIL
CROSS SECTION

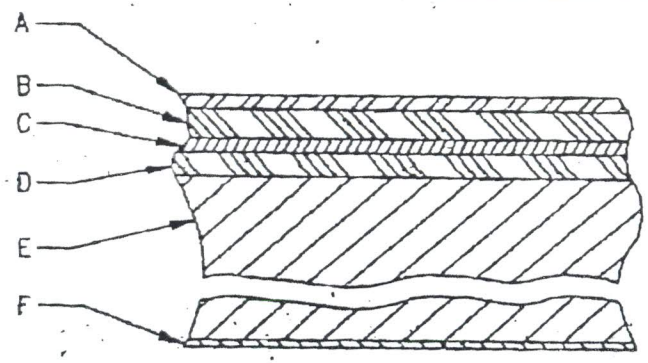

SINGLE FACE FOIL
CROSS SECTION

A. * PLATING 0.00002
B. GOLD 0.00004
C. AMERICIUM 241 & GOLD 0.00002
D. GOLD 0.00003
E. SILVER 0.004 TO 0.009
F. FLASH PLATING FOR IDENTIFICATION

NOTES:

1. * PLATING CAN BE YELLOW GOLD, WHITE GOLD, OR PALLADIUM.
2. ACTIVITY RANGE:
   A. FROM LESS THAN 1 MICROCURIE UP TO 55 MILLICURIES PER FOIL.
   B. NOT TO EXCEED 2.33 MICROCURIES PER SQUARE MILLIMETER. (OR 1500 MICRO-CURIES PER SQUARE INCH)
3. DIMENSIONS ARE IN INCHES UNLESS OTHERWISE SPECIFIED.

NRD INC.
A SUBSIDIARY OF MARK IV INDUSTRIES, INC.
2837 ALT BOULEVARD GRAND ISLAND, NEW YORK 14072

TOLERANCE (EXCEPT AS NOTED)	TITLE: A-001 FOIL GENERAL COMPOSITION		
DECIMAL ±	MATERIAL & FINISH: SEE NOTES	SCALE: NONE	DRAWN BY: C. DUNN
FRACTIONAL ±			
ANGULAR ±	DATE: 10JL92	DWG. NUMBER: 92A071	REVISION

U.S. Department of Transportation
Research and Special Programs Administration

400 Seventh St., S.W.
Washington, D.C. 20590

IAEA CERTIFICATE OF COMPETENT AUTHORITY
SPECIAL FORM RADIOACTIVE MATERIALS
CERTIFICATE NUMBER USA/0036/S, REVISION 7

This certifies that the source described has been demonstrated to meet the regulatory requirements for special form radioactive material as prescribed in the regulations of the International Atomic Energy Agency[1] and the United States of America[2] for the transport of radioactive materials.

1. Source Identification - NRD Model A-001.

2. Source Description - This Special Form material is a laminated metallic foil of silver, gold, and americium dioxide, as shown on NRD Inc. Drawing No. B2A071 (attached). The foil may be single or double. The single foil consists of successive layers of plating, gold, Am-241 and gold, gold, silver, and flash plating for identification. In the double foil the flash plating is replaced by gold, Am-241 and gold, gold, and plating. The plating is yellow gold, white gold, or palladium. During transport the material may be in the form of free foils or secured in a variety of holders or mounts.

3. Radioactive Contents - Americium-241 as an oxide with the activity per foil ranging from less than 0.037 MBq (1uCi) to 2.035 GBq (55 mCi). Activity per unit area does not exceed 0.086 MBq per square millimeter (1600 uCi per square inch).

4. Quality Assurance - Records of Quality Assurance activities required by Paragraph 310 of the IAEA regulations[1] shall be maintained and made available to the authorized officials for at least three years after the last shipment authorized by this certificate. Consignors and consignees in the United States exporting or importing shipments under this certificate shall satisfy the requirements of Subpart H of 10 CFR 71.

5. Expiration Date - This certificate expires August 31, 2007.

---

1 "Regulations for the Safe Transport of Radioactive Material, 1985 Edition (Revised), No. TS-R-1 (ST-1, Revised)," published by the International Atomic Energy Agency (IAEA), Vienna, Austria.

2 Title 49, Code of Federal Regulations, Parts 100 - 199, United States of America.

NRD

CERTIFICATE USA/0038/9, REVISION 7

This certificate is issued in accordance with paragraph 804 of the IAEA Regulations and Section 173.478 of Title 49 of the Code of Federal Regulations, in response to the petition and information dated January 31, 2002 submitted by NRD LLC, Grand Island, NY, and in consideration of other information on file in this Office.

Certified By:

Robert A. McGuire
Associate Administrator for
Hazardous Materials Safety

JUL 17 2002
(DATE)

Revision 7 - Issued to reference the 1996 IAEA regulations and to extend the expiration date.

NRD

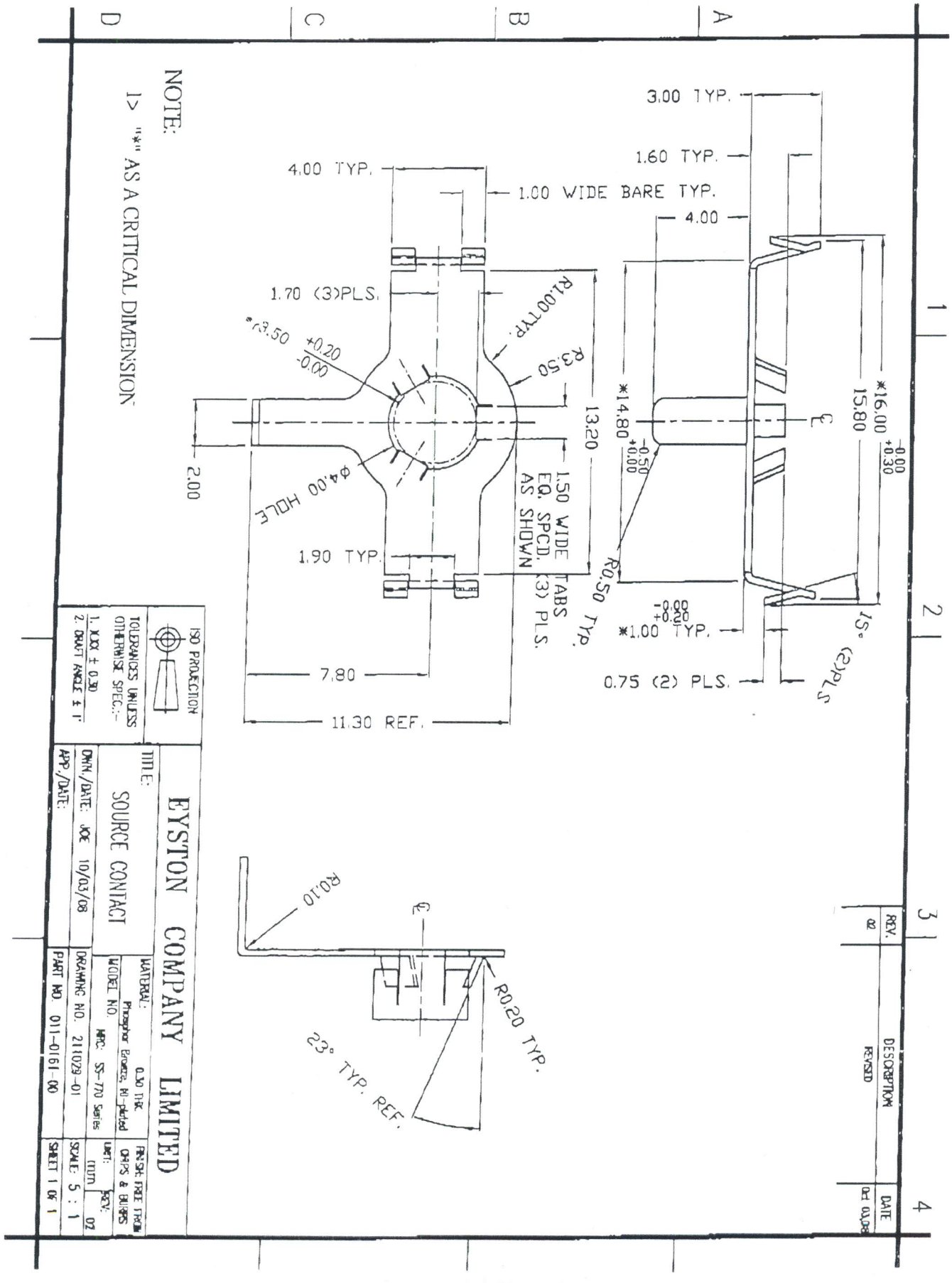
NOTE:
1> "*" AS A CRITICAL DIMENSION
4.00 TYP.
1.00 WIDE BARE TYP.
1.70 (3)PLS.
*3.50 +0.20 -0.00
R1.00 TYP.
R3.50
13.20
2.00
ø4.00 HOLE
1.90 TYP.
1.50 WIDE EQ. SPCD. AS SHOWN (3) TABS
7.80
11.30 REF.
3.00 TYP.
1.60 TYP.
4.00
*14.80 +0.00 -0.50
15.80
*16.00 +0.30 -0.00
R0.50 TYP.
*1.00 +0.00 -0.00 TYP.
15°
(2)PLS
0.75 (2) PLS.
R0.10
R0.20 TYP.
23° TYP. REF.
ISO PROJECTION
TOLERANCES UNLESS OTHERWISE SPEC.:-
1. XXX ± 0.30
2. DRAFT ANGLE ± 1°
TITLE:
SOURCE CONTACT
EYSTON COMPANY LIMITED
MATERIAL: Phosphor Bronze, Ni-plated
0.30 THK
MODEL NO.
MFG: SS-770 Series
DRAWING NO. 211029-01
PART NO. 011-0161-00
DWN./DATE: JOE 10/03/08
APP./DATE:
FINISH: FREE FROM CHIPS & BURRS
UNIT: (mm)
REV: 02
SCALE: 5 : 1
SHEET 1 OF 1
REV. 02
DESCRIPTION REVISED
DATE Oct 03,08

REV.	DESCRIPTION	DATE
C	RELEASED	Oct 03,08

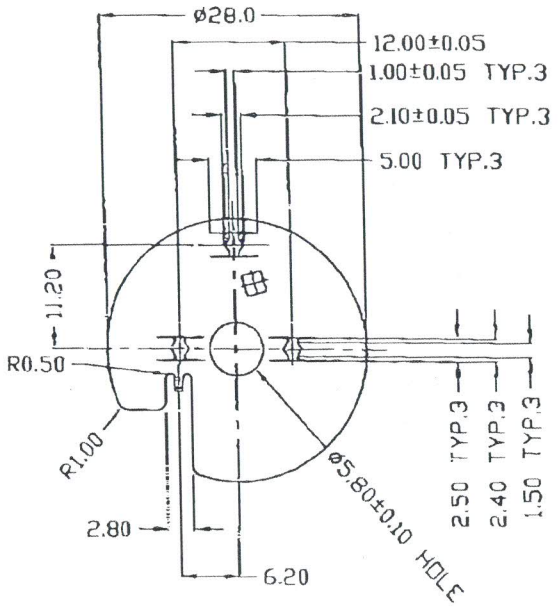

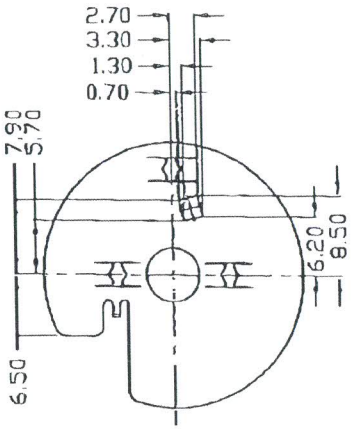

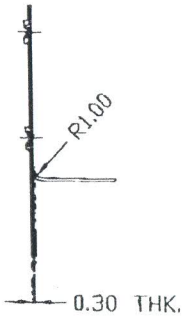

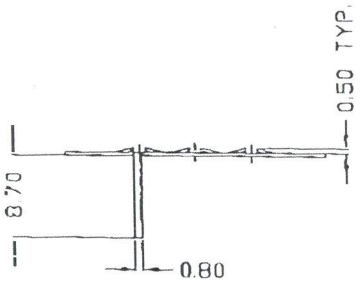

ISO PROJECTION

TOLERANCES UNLESS OTHERWISE SPEC.:-

1. XXX ± 0.30

EYSTON COMPANY LIMITED

TITLE: Source Chamber NGd Contact Plate	MATERIAL: Phosphor Bronze, Ni-plated	FINISH: FREE FROM CHIPS & BURRS	
	MODEL NO. NERC SS-770 Series	UNIT: mm	REV: C
DWN./DATE: Joe 10/03/08	DRAWING NO. 271101-01	SCALE: 4 : 1	
APP./DATE:	PART NO. 011-0160-01	SHEET 1 OF 1	

REV.	DESCRIPTION	DATE
C	REVISED	Oct 03,08

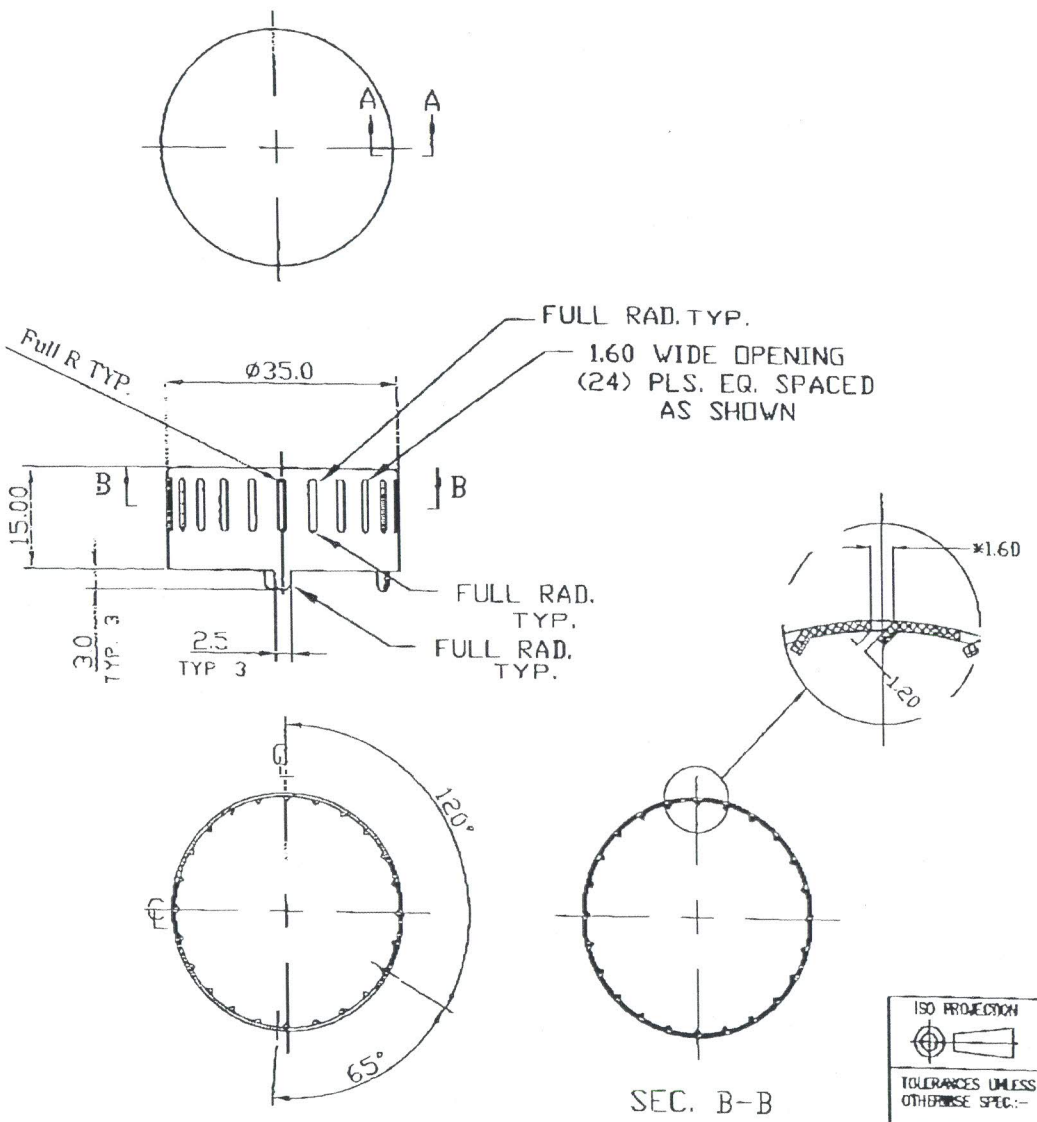

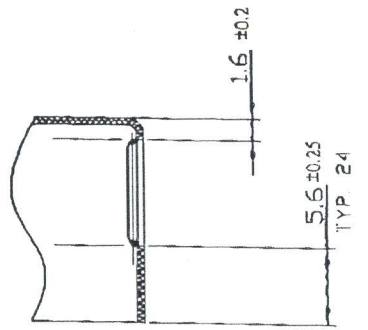

SEC. A-A
SCALE 2:1

NOTE:

1) THICKNESS MUST BE 0.50MM(±0.10)
2) "*" AS A CRITICAL DIMENSION

ISO PROJECTION	EYSTON COMPANY LIMITED		
TOLERANCES UNLESS OTHERWISE SPEC.:- 1. X.XX ± 0.30 2. DRAFT ANGLE ± 1°	TITLE: SOURCE CHAMBER COVER	MATERIAL: Steel, Ni-plated	FINISH: FREE FROM CHIPS & BURRS
		MODEL NO. NRC: SS-770 Series	UNIT: DUTI REV: C
	DWN./DATE: Joe 10/03/08	DRAWING NO. 011-0159-01	SCALE: 1 : 1
	APP./DATE:	PART NO. 011-0159-01	SHEET 1 OF 1

JIS A4 (297x210)

014/014
USI
02/26/2010 19:38 FAX 4103632218

REV.	DESCRIPTION	DATE
B	RELEASED	Oct 03,08

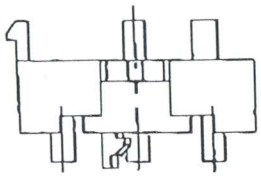

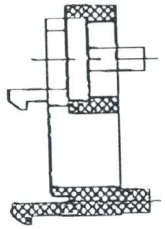

SECTION B-B

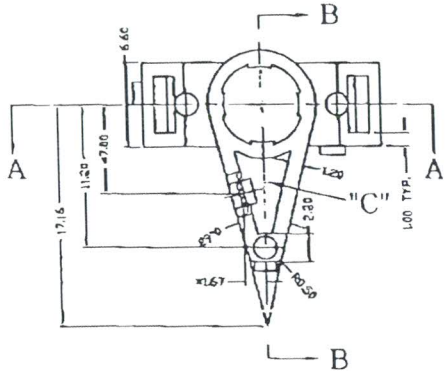

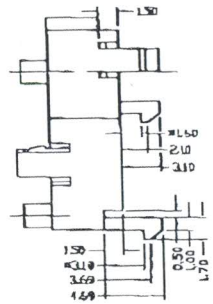

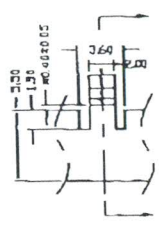

SECTION C-C

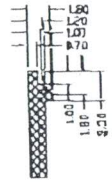

SECTION D-D

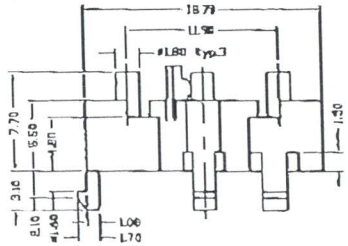

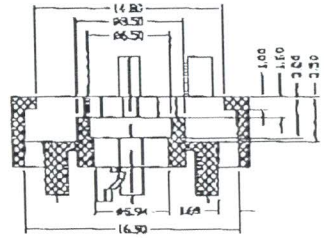

SECTION A-A

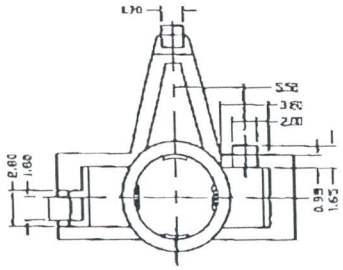

ISO PROJECTION	EYSTON COMPANY LIMITED		
TOLERANCES UNLESS OTHERWISE SPEC.:- 1. XXX ± 0.10	TITLE: Source Holder Base	MATERIAL: Polycarbonate G.E. LEXAN ML1848	FINISH:
		MODEL NO. NRC: SS-770 Series	UNIT: mm / REV: B
	DWN./DATE: Joe 10/03/08	DRAWING NO. 271101-02	SCALE: 1 : 1
	APP./DATE:	PART NO. 011-0158-01	SHEET 1 OF 1