FPL

FEB 26 2010

L-2010-031
10 CFR 50.36a(a)(2)

U. S. Nuclear Regulatory Commission
Attn: Document Control Desk
Washington, D.C. 20555-00001

Re: Turkey Point Units 3 and 4
Docket Nos. 50-250 and 50-251
2009 Annual Radioactive Effluent Release Report

Attached is the Radioactive Effluent Release Report for the period of January 1, 2009, through December 31, 2009, for Turkey Point Units 3 and 4, as required by Technical Specification 6.9.1.4 and 10 CFR 50.36a (a)(2).

Should there be any questions or comments regarding this information, please contact Robert J. Tomonto at (305) 246-7327.

Very truly yours,

Michael Kiley
Vice President
Turkey Point Nuclear Plant

SM

Attachment

cc: Regional Administrator, Region II, USNRC
Senior Resident Inspector, USNRC, Turkey Point Plant

A009
IE48
NRR

Florida Power and Light
Turkey Point Plant
Units 3 and 4

ANNUAL RADIOACTIVE EFFLUENT RELEASE REPORT

January 2009 through December 2009

Submitted by:

NUCLEAR CHEMISTRY DEPARTMENT
FLORIDA POWER AND LIGHT COMPANY

P. E. Skinner, Radiochemist

N. R. Bach, Chemistry Manager

P. W. Rubin, Plant General Manager

Table of Contents

1.0 REGULATORY LIMITS 3

2.0 EFFLUENT CONCENTRATION 4

3.0 AVERAGE ENERGY 4

4.0 MEASUREMENTS AND APPROXIMATIONS OF TOTAL ACTIVITY 4

5.0 BATCH RELEASES 7

6.0 UNPLANNED RELEASES 8

7.0 REACTOR COOLANT ACTIVITY 8

8.0 SITE RADIATION DOSE 9

9.0 OFFSITE DOSE CALCULATION MANUAL (ODCM) REVISIONS 10

10.0 SOLID WASTE AND IRRADIATED FUEL SHIPMENTS 10

11.0 PROCESS CONTROL PROGRAM REVISIONS 10

12.0 INOPERABLE EFFLUENT MONITORING INSTRUMENTATION 10

13.0 NEI's INDUSTRY INITIATIVE ON GROUND WATER SAMPLING 10

UNIT 3 TABLES 1 THROUGH 5 11

UNIT 4 TABLES 1 THROUGH 5 16

SITE DOSE SUMMATION TABLE 5 21

SOLID WASTE AND IRRADIATED FUEL SHIPMENTS TABLE 6 22

ATTACHMENT A, ODCM 26

1.0 REGULATORY LIMITS

1.1 Liquid Effluent

(a) The concentration of radioactive material released in liquid effluents to unrestricted areas shall not exceed ten times the concentration specified in 10CFR20 Appendix B, Table 2, Column 2 for radionuclides other than dissolved or entrained gases. For dissolved or entrained noble gases, the concentration shall not exceed 2.0E-04 micro-curies per milliliter total activity.

(b) The dose or dose commitment per reactor to a member of the public from any radioactive materials in liquid effluents released to unrestricted areas shall be limited as follows:

- During any calendar quarter, to less than or equal to 1.5 mrem to the total body and less than or equal to 5 mrem to any organ.
- During any calendar year, to less than or equal to 3.0 mrem to the total body and less than or equal to 10 mrem to any organ.

1.2 Gaseous Effluent

(a) The dose rate due to radioactive materials released in gaseous effluent from the site to areas at and beyond the site boundary shall be limited to the following:

- Less than or equal to 500 mrem per year to the total body and less than or equal to 3000 mrem per year to the skin due to noble gases.
- Less than or equal to 1500 mrem per year to any organ due to I-131, I-133, tritium, and for all radioactive materials in particulate form with half-lives greater than 8 days.

(b) The air dose per reactor to areas at and beyond the site boundary due to noble gases released in gaseous effluents shall be limited to:

- During any calendar quarter, to less than or equal to 5 mrad for gamma radiation and less than or equal to 10 mrad for beta radiation.
- During any calendar year, to less than or equal to 10 mrad for gamma radiation and less than or equal to 20 mrad for beta radiation.

(c) The dose per reactor to a member of the public, due to I-131, I-133, tritium, and all radionuclides in particulate form with half-lives greater than 8 days in gaseous effluent released to areas at and beyond the site boundary shall not exceed 7.5 mrem to any organ during any calendar quarter and shall not exceed 15 mrem to any organ during any calendar year.

2.0 EFFLUENT CONCENTRATION

Water : In accordance with 10CFR20, Appendix B, Table 2, Column 2, and for entrained or dissolved noble gases as described in 1.1.a of this report.

Air : Release concentrations are limited to dose rate limits described in 1.2 of this report.

3.0 AVERAGE ENERGY

The average energy of fission and activation gases in effluents is not applicable.

4.0 MEASUREMENTS AND APPROXIMATIONS OF TOTAL ACTIVITY

All liquid and airborne discharges to the environment during this period were analyzed in accordance with Technical Specification requirements. The minimum frequency of analysis as required by Regulatory Guide 1.21 was met or exceeded.

When alpha, tritium and named nuclides are shown as "- -" curies on the following tables, this should be interpreted as 'no activity' was detected on the samples using the Offsite Dose Calculation Manual (ODCM) analysis techniques to achieve the required Lower Limit of Detection ("LLD") sensitivity for radioactive effluents.

4.1 Liquid Effluents

Aliquots of representative pre-release samples, from the waste disposal system, were isotopically analyzed for gamma emitting isotopes on a multichannel analyzer.

Frequent periodic sampling and analysis were used to determine if radioactivity was being released via the steam generator blowdown system and the storm drain system.

Monthly and quarterly composite samples for the waste disposal system were prepared to give proportional weight to each liquid release made during the designated period of accumulation. The monthly composite was analyzed for tritium and gross alpha radioactivity. Tritium was determined by use of liquid scintillation techniques, and gross alpha radioactivity was determined by use of a solid state scintillation system. The quarterly composite was analyzed for Sr-89, Sr-90, Ni-63, and Fe-55 by chemical separation.

All radioactivity concentrations determined from sample analysis of a pre-release composite were multiplied by the total represented volume of the liquid waste released to determine the total quantity of each isotope and of gross alpha activity released during the compositing period.

Aliquots of representative samples from the waste disposal system were analyzed on a pre-release basis by gamma spectral analysis. The resulting isotope concentrations were multiplied by the total volume released in order to estimate the total dissolved gases released.

The liquid waste treatment system is shared by both units at the site and generally all liquid releases are allocated on a 50/50 basis to each unit respectively.

There were no continuous liquid radioactive effluent releases above the lower limit of detection for Unit 3 or 4

4.2 Gaseous Effluents

Airborne releases to the atmosphere occurred from the following sources:

- Gas Decay Tanks
- Containment Purges
- Condenser Offgas
- Releases incidental to operation of the plant.

The techniques employed in determining the radioactivity in airborne releases are:

a) Gamma spectral analysis for fission and activation gases,
b) Removal of particulate material by filtration and subsequent gamma spectral analysis, Sr-89, Sr-90 determination, and gross alpha determination,
c) Absorption of halogen radionuclides on a charcoal filter and subsequent gamma spectral analysis, and
d) Analysis of water vapor in a gas sample for tritium using liquid scintillation techniques.

All gaseous releases from the plant which were not accounted for by the above methods were conservatively estimated as curies of Xe-133 by use of the SPING-4 radiation monitors and the Plant Vent process monitor data using the current calibration curve for that process monitor. This method was not used this reporting period.

Both units share portions of the gaseous waste treatment system and generally all gaseous releases from the shared system are allocated on a 50/50 basis to each unit.

Meteorological data for the period January 2009 through December 2009, in the form of Joint Frequency Distribution Tables, are maintained on site.

4.3 Estimation of Errors

a) Sampling Error

The error associated with volume measurement devices, flow measuring devices, etc., based on calibration data and design tolerances has been conservatively estimated to be collectively less than ± 10%.

b) Analytical Error

Our Quality Control Cross-Check Program involves counting unknown samples provided by an independent external lab. The errors associated with our analysis of these unknown samples, reported to us by the independent lab, were used as the basis for deriving the following analytical error terms:

NUCLIDE TYPE	AVERAGE ERROR	MAXIMUM ERROR
Liquid	± 5.2%	± 13.0%
Gaseous	± 3.7%	± 8.0%

5.0 BATCH RELEASES

5.1 LIQUID	Unit 3	Unit 4
a) Number of releases	8.45E+01	8.45E+01
b) Total time period of batch releases, minutes	8.79E+03	8.79E+03
c) Maximum time period for a batch release, minutes	3.10E+02	3.10E+02
d) Average time period for a batch release, minutes	1.05E+02	1.05E+02
e) Minimum time for a batch release, minutes	5.00E+01	5.00E+01
f) Average stream flow during period of release of effluent into a flowing stream, liters-per-minute	5.36E+06	5.36E+06

5.1 GASEOUS	Unit 3	Unit 4
a) Number of releases	2.45E+01	1.95E+01
b) Total time period of batch releases, minutes	2.18E+03	9.72E+02
c) Maximum time period for a batch release, minutes	2.40E+02	2.40E+02
d) Average time period for a batch release, minutes	8.87E+01	4.98E+01
e) Minimum time for a batch release, minutes	2.00E+01	2.00E+01

6.0 UNPLANNED RELEASES

6.1 Liquid

There were no unplanned liquid releases this period for either Unit 3 or Unit 4.

6.2 Gaseous

There were unplanned gaseous releases this period:

During the spring refueling outage for Unit 3, it was determined that the containment atmosphere was exiting through the personnel and equipment hatches into the plant environs during mode 5. The normal effluent pathway is out the Plant Vent Stack. The release was monitored locally and accounted for in this report. During the fall refueling outage for Unit 4, a detailed sampling and monitoring plan was prepared to quantify and measure the flow out the equipment and personnel hatches while the hatches are open. During both the Unit 3 and Unit 4 outages a release permit was prepared for the containments prior to opening the hatches, this flow was out the hatches, and not the Plant Vent Stack and therefore these releases are reported in this report. No limits were exceeded due to these releases.

A leak of 3E CVCS Demineralizer Fill valve diaphragm caused a small amount of liquid and gas to escape to the Auxiliary Building roof. The liquid was captured and contained. The gaseous release was accounted for in this report. No limits were exceeded due to this release.

A leak of 4D CVCS Demineralizer Fill valve diaphragm caused a small amount of liquid and gas to escape to the Auxiliary Building roof. The liquid was captured and contained. The gaseous release was accounted for in this report. No limits were exceeded due to this release.

Discharge of B GDT through the Unit 4 RCDT into the U4 Containment due to improper release of a clearance occurred during the Unit 4 Refueling Outage. This release did not reach plant environs since the hatches were closed and the containment purge was not in progress. It is mentioned in this report due to the potential for a release of this type to reach the plant environs.

7.0 REACTOR COOLANT ACTIVITY

7.1 Unit 3

Reactor coolant activity limit of 100/E-Bar was not exceeded. The Reactor Coolant limit of 1.0 uCi/gram Dose Equivalent I-131 was exceeded. Information is contained in the letter from Turkey Point Nuclear Station to the NRC, L-2010-030.

7.2 Unit 4

Reactor coolant activity limits of 100/E-Bar and 1.0 uCi/gram Dose Equivalent I-131 were not exceeded.

8.0 SITE RADIATION DOSE

The assessment of radiation dose from radioactive effluents to the general public due to their activities inside the site boundary assumes a visitor was at the child development center/fitness center for ten hours a day, five days each week for fifty weeks of the year, receiving exposure from both Unit 3 and Unit 4 at Turkey Point. The child development center/fitness center is located approximately 1.75 miles WNW of the plant. Specific activities used in these calculations are the sum of the activities listed in Unit 3 Table 3 and Unit 4 Table 3. The following dose calculations were made using historical meteorological data:

	Adult Inhalation	Child Inhalation
Bone (mrem)	3.16E-06	5.70E-06
Liver (mrem)	3.52E-05	2.74E-05
Thyroid (mrem)	1.52E-03	1.95E-03
Kidney (mrem)	3.83E-05	1.78E-05
Lung (mrem)	3.08E-05	2.17E-05
GI-LLI (mrem)	3.15E-05	2.19E-05
Total Body (mrem)	3.33E-05	2.59E-05

Gamma Air Dose (mrad)	3.13E-04
Beta Air Dose (mrad)	9.48E-04

9.0 OFFSITE DOSE CALCULATION MANUAL (ODCM) REVISIONS

The ODCM was reviewed and revised in 2009. A copy is part of Attachment A of this submittal.

10.0 SOLID WASTE AND IRRADIATED FUEL SHIPMENTS

No irradiated fuel shipments or irradiated component shipments were made from the site. Common solid waste from Turkey Point Units 3 and 4 was shipped jointly. A summation of these shipments is given in Table 6 of this report.

11.0 PROCESS CONTROL PROGRAM REVISIONS

There were no revisions to the Process Control Program during this reporting period.

12.0 INOPERABLE EFFLUENT MONITORING INSTRUMENTATION

During this period the Unit 4 Condenser Offgas Monitor, RAD-4-6417 was out of service from November 25 to December 7 due to a failed high voltage power supply. The preplanned alternate monitor was in service and monitoring the effluent pathway during the period when RAD-4-6417 was out of service. Reported to the NRC by FPL letter L-2009-293, dated December 15, 2009.

13.0 NEI's INDUSTRY INITIATIVE ON GROUND WATER SAMPLING

In 2009 as part of the Industry Initiative on Groundwater Sampling, groundwater monitoring wells on site and adjacent to the site were sampled for tritium. The tritium results were from less than minimum detectable activity to 4690 Pico curie per liter. All results were less than the limits of the Offsite Dose Calculation Manual, Table 5.1-2, Reporting Levels for Radioactivity Concentrations in Environmental Samples. The results are reported in the Annual Radiological Environmental Operating Report.

TURKEY POINT UNITS 3 AND 4
ANNUAL RADIOACTIVE EFFLUENT RELEASE REPORT
JANUARY 2009 THROUGH DECEMBER 2009

LIQUID EFFLUENTS SUMMARY

UNIT 3
TABLE 1

A. FISSION AND ACTIVATION PRODUCTS

	UNITS	Qtr 1	Qtr 2	Qtr 3	Qtr 4	Est. Error (%)
1. Total Release (not including tritium,gases, alpha)	Ci	1.11E-02	1.71E-02	2.60E-02	2.78E-02	3.44
2. Average diluted concentration during the period	uCi/ml	1.09E-09	1.66E-09	2.42E-09	1.75E-09	
3. Percent of applicable limit	%	1.03E-01	5.09E-01	2.29E-01	2.19E-01	

B. TRITIUM

	UNITS	Qtr 1	Qtr 2	Qtr 3	Qtr 4	Est. Error (%)
1. Total Release	Ci	1.81E+02	6.15E+01	6.82E+01	1.17E+02	2.50
2. Average diluted concentration during the period	uCi/ml	1.77E-05	5.99E-06	6.33E-06	7.42E-06	
3. Percent of applicable limit	%	1.77E+00	5.99E-01	6.33E-01	7.42E-01	

C. DISSOLVED AND ENTRAINED GASES

	UNITS	Qtr 1	Qtr 2	Qtr 3	Qtr 4	Est. Error (%)
1. Total Release	Ci	1.48E-02	1.95E-02	1.30E-03	3.73E-03	3.44
2. Average diluted concentration during the period	uCi/ml	1.45E-09	1.90E-09	1.21E-10	2.36E-10	
3. Percent of applicable limit	%	7.25E-04	9.51E-04	6.03E-05	1.18E-04	

D. GROSS ALPHA RADIOACTIVITY

	UNITS	Qtr 1	Qtr 2	Qtr 3	Qtr 4	Est. Error (%)
1. Total Release	Ci	- -	- -	- -	- -	

E. LIQUID VOLUMES

	UNITS	Qtr 1	Qtr 2	Qtr 3	Qtr 4	Est. Error (%)
1. Batch waste released, prior to dilution	LITERS	4.75E+05	4.97E+05	4.27E+05	8.18E+05	10.00
2. Continuous waste released, prior to dilution	LITERS	- -	- -	- -	- -	
3. Dilution water used during period	LITERS	1.02E+10	1.03E+10	1.08E+10	1.58E+10	

LIQUID EFFLUENTS SUMMARY

UNIT 3
TABLE 2

NUCLIDES RELEASED	UNITS	BATCH MODE			
		Qtr 1	Qtr 2	Qtr 3	Qtr 4
Fe-55	Ci	1.60E-03	2.68E-03	1.44E-03	3.06E-03
Ni-63	Ci	4.26E-03	6.39E-03	1.60E-02	1.51E-02
Sr-89	Ci	- -	- -	- -	- -
Sr-90	Ci	- -	- -	- -	- -
Na-24	Ci	- -	- -	- -	- -
Cr-51	Ci	- -	- -	4.73E-05	1.17E-05
Mn-54	Ci	2.15E-04	2.52E-05	3.29E-05	8.28E-05
Co-57	Ci	6.91E-05	3.65E-06	2.43E-05	5.33E-05
Co-58	Ci	2.16E-03	1.75E-03	2.09E-03	4.69E-03
Fe-59	Ci	- -	4.05E-06	- -	6.50E-06
Co-60	Ci	2.08E-03	5.15E-04	8.63E-04	1.81E-03
Zn-65	Ci	- -	- -	- -	3.14E-06
Nb-95	Ci	8.86E-05	- -	- -	- -
Zr-95	Ci	2.46E-06	- -	- -	- -
Mo-99	Ci	- -	- -	- -	- -
Ru-106	Ci	- -	- -	- -	- -
Ag-110	Ci	1.83E-04	- -	4.99E-05	1.13E-06
Sn-113	Ci	5.75E-06	- -	- -	- -
Sn-117m	Ci	- -	7.25E-05	2.42E-05	3.19E-06
Sb-124	Ci	- -	5.90E-04	2.47E-04	3.62E-05
Sb-125	Ci	3.08E-04	4.70E-04	3.52E-03	5.58E-04
I-131	Ci	3.79E-05	1.86E-04	5.40E-05	1.35E-04
I-133	Ci	- -	5.05E-06	3.26E-05	9.49E-05
I-134	Ci	- -	2.22E-05	- -	- -
Cs-134	Ci	3.92E-05	2.07E-03	7.73E-04	9.35E-04
I-135	Ci	- -	1.15E-05	9.30E-06	- -
Cs-137	Ci	5.39E-05	2.28E-03	8.18E-04	1.23E-03
La-140	Ci	- -	- -	- -	- -
Ce-141	Ci	- -	- -	- -	- -
Ce-144	Ci	- -	- -	- -	- -
Ce-139	Ci	1.35E-06	- -	- -	- -
Np-239	Ci	- -	- -	- -	- -
Te-129	Ci	- -	- -	- -	- -
TOTAL FOR PERIOD	Ci	1.11E-02	1.71E-02	2.60E-02	2.78E-02

LIQUID EFFLUENTS - DISSOLVED GAS SUMMARY

NUCLIDES RELEASED	UNITS	BATCH MODE			
		Qtr 1	Qtr 2	Qtr 3	Qtr 4
Ar-41	Ci	- -	- -	- -	- -
Kr-85m	Ci	- -	- -	- -	- -
Kr-85	Ci	9.55E-04	7.12E-04	- -	3.67E-03
Xe-131	Ci	- -	- -	- -	- -
Xe-133	Ci	1.31E-02	1.82E-02	2.49E-05	5.05E-05
Xe-133m	Ci	8.30E-05	- -	- -	- -
Xe-135	Ci	7.25E-05	- -	4.67E-06	1.02E-05
Xe-138	Ci	- -	- -	- -	- -
TOTAL FOR PERIOD	Ci	1.42E-02	1.89E-02	2.96E-05	3.73E-03

LIQUID EFFLUENTS - DOSE SUMMATION

Age group : Teenager
Location : Cooling Canal

Shoreline Deposition	Dose (mrem)	% of Annual Limit
TOTAL BODY	3.93E-04	1.31E-02

TURKEY POINT UNITS 3 AND 4
ANNUAL RADIOACTIVE EFFLUENT RELEASE REPORT
JANUARY 2009 THROUGH DECEMBER 2009

GASEOUS EFFLUENTS SUMMARY

UNIT 3
TABLE 3

A. FISSION AND ACTIVATION PRODUCTS

	UNITS	Qtr 1	Qtr 2	Qtr 3	Qtr 4	Est. Error (%)
1. Total Release	Ci	1.60E+02	1.68E+00	1.35E-01	3.52E-01	2.79
2. Average release rate for the period	uCi/sec	2.05E+01	2.13E-01	1.70E-02	4.53E-02	
3. Percent of Technical Specification LImit	%	7.06E-10	4.74E-12	3.55E-13	2.76E-13	

B. IODINES

	UNITS	Qtr 1	Qtr 2	Qtr 3	Qtr 4	Est. Error (%)
1. Total Release	Ci	2.21E-02	2.19E-03	- -	- -	3.44
2. Average release rate for the period	uCi/sec	2.84E-03	2.79E-04	- -	- -	
3. Percent of Technical Specification LImit	%	3.79E+00	3.77E-01	- -	- -	

C. PARTICULATES

	UNITS	Qtr 1	Qtr 2	Qtr 3	Qtr 4	Est. Error (%)
1. Particulates with half-life >8 days	Ci	3.69E-06	1.99E-05	- -	- -	2.50
2. Average release rate for the period	uCi/sec	4.75E-07	2.53E-06	- -	- -	
3. Percent of Technical Specification LImit	%	- -	- -	- -	- -	
4. Gross Alpha Radioactivity	Ci	- -	- -	- -	- -	

D. TRITIUM

	UNITS	Qtr 1	Qtr 2	Qtr 3	Qtr 4	Est. Error (%)
1. Total Release	Ci	4.49E+00	9.04E-01	1.57E+00	1.82E+00	2.50
2. Average release rate for the period	uCi/sec	5.77E-01	1.15E-01	1.97E-01	2.33E-01	
3. Percent of Technical Specification LImit	%	4.50E-04	6.79E-06	1.18E-05	1.36E-05	

TURKEY POINT UNITS 3 AND 4
ANNUAL RADIOACTIVE EFFLUENT RELEASE REPORT
JANUARY 2009 THROUGH DECEMBER 2009

GASEOUS EFFLUENTS SUMMARY

UNIT 3
TABLE 4

A . FISSION GASES

NUCLIDES RELEASED	UNITS	BATCH MODE			
		Qtr 1	Qtr 2	Qtr 3	Qtr 4
Ar-41	Ci	- -	3.12E-05	- -	- -
Kr-85	Ci	1.17E+00	5.66E-01	5.59E-02	3.05E-01
Kr-85m	Ci	1.22E-02	- -	- -	3.32E-15
Xe-131m	Ci	4.67E-01	6.49E-02	- -	2.92E-04
Xe-133	Ci	1.94E+01	1.05E+00	7.78E-02	4.66E-02
Xe-133m	Ci	4.96E-01	5.66E-04	1.09E-03	4.46E-04
Xe-135	Ci	4.65E-02	2.03E-05	6.36E-05	3.48E-05
Xe-135m	Ci	8.28E-06	2.36E-05	- -	- -
TOTAL FOR PERIOD	Ci	2.16E+01	1.68E+00	1.35E-01	3.52E-01

NUCLIDES RELEASED	UNITS	CONTINUOUS MODE			
		Qtr 1	Qtr 2	Qtr 3	Qtr 4
Ar-41	Ci	- -	- -	- -	- -
Kr-85	Ci	- -	- -	- -	- -
Kr-85m	Ci	- -	- -	- -	- -
Kr-87	Ci	- -	- -	- -	- -
Kr-88	Ci	- -	- -	- -	- -
Xe-131m	Ci	- -	- -	- -	- -
Xe-133	Ci	1.37E+02	- -	- -	- -
Xe-133m	Ci	3.30E-01	- -	- -	- -
Xe-135	Ci	2.39E-01	- -	- -	- -
Xe-135m	Ci	- -	- -	- -	- -
Xe-138	Ci	- -	- -	- -	- -
TOTAL FOR PERIOD	Ci	1.38E+02	- -	- -	- -

B. IODINES

NUCLIDES RELEASED	UNITS	CONTINUOUS MODE			
		Qtr 1	Qtr 2	Qtr 3	Qtr 4
Br-82	Ci	- -	- -	- -	- -
I-131	Ci	2.17E-02	2.19E-03	- -	- -
I-133	Ci	4.12E-04	- -	- -	- -
TOTAL FOR PERIOD	Ci	2.21E-02	2.19E-03	- -	- -

C. PARTICULATES

NUCLIDES RELEASED	UNITS	CONTINUOUS MODE			
		Qtr 1	Qtr 2	Qtr 3	Qtr 4
Co-58	Ci	- -	1.12E-05	- -	- -
Co-60	Ci	3.69E-06	8.01E-10	- -	- -
Mn-54	Ci	- -	- -	- -	- -
Cr-51	Ci	- -	8.71E-06	- -	- -
TOTAL FOR PERIOD	Ci	3.69E-06	1.99E-05	- -	- -

DOSES DUE TO IODINE,TRITIUM, AND PARTICULATES

UNIT 3
TABLE 5

PATHWAY	BONE	LIVER	THYROID	KIDNEY	LUNG	GI-LLI	SKIN	TOTAL BODY
Cow milk - Infant (mrem)	9.82E-04	1.24E-03	3.77E-01	3.22E-04	6.59E-05	1.10E-04	--	7.52E-04
Fruit & Veg Fresh (mrem)	4.70E-05	5.51E-05	1.57E-02	3.39E-05	6.87E-06	1.10E-05	--	4.32E-05
Ground Plane (mrem)	7.87E-06	7.87E-06	7.87E-06	7.87E-06	7.87E-06	7.87E-06	9.50E-06	7.87E-06
Inhalation - Adult (mrem)	1.92E-06	3.25E-05	9.33E-04	3.44E-05	2.99E-05	3.03E-05	--	3.13E-05
TOTAL (mrem)	1.04E-03	1.33E-03	3.94E-01	3.99E-04	1.11E-04	1.59E-04	9.50E-06	8.35E-04
% of Annual Limit	6.93E-03	8.89E-03	2.62E+00	2.66E-03	7.37E-04	1.06E-03	6.34E-05	5.56E-03

DOSE DUE TO NOBLE GASES

	mrad	% of Annual Limit
Gamma Air Dose	1.05E-03	1.05E-02
Beta Air Dose	3.16E-03	1.58E-02

TURKEY POINT UNITS 3 AND 4
ANNUAL RADIOACTIVE EFFLUENT RELEASE REPORT
JANUARY 2009 THROUGH DECEMBER 2009

LIQUID EFFLUENTS SUMMARY

UNIT 4
TABLE 1

A. FISSION AND ACTIVATION PRODUCTS

	UNITS	Qtr 1	Qtr 2	Qtr 3	Qtr 4	Est. Error (%)
1. Total Release (not including tritium,gases, alpha)	Ci	1.11E-02	1.71E-02	2.60E-02	2.78E-02	3.44
2. Average diluted concentration during the period	uCi/ml	1.09E-09	1.66E-09	2.42E-09	1.75E-09	
3. Percent of applicable limit	%	1.03E-01	5.09E-01	2.29E-01	2.19E-01	

B. TRITIUM

	UNITS	Qtr 1	Qtr 2	Qtr 3	Qtr 4	Est. Error (%)
1. Total Release	Ci	1.81E+02	6.15E+01	6.82E+01	1.17E+02	2.50
2. Average diluted concentration during the period	uCi/ml	1.77E-05	5.99E-06	6.33E-06	7.42E-06	
3. Percent of applicable limit	%	1.77E+00	5.99E-01	6.33E-01	7.42E-01	

C. DISSOLVED AND ENTRAINED GASES

	UNITS	Qtr 1	Qtr 2	Qtr 3	Qtr 4	Est. Error (%)
1. Total Release	Ci	1.48E-02	1.95E-02	1.30E-03	3.73E-03	3.44
2. Average diluted concentration during the period	uCi/ml	1.45E-09	1.90E-09	1.21E-10	2.36E-10	
3. Percent of applicable limit	%	7.25E-04	9.51E-04	6.03E-05	1.18E-04	

D. GROSS ALPHA RADIOACTIVITY

	UNITS	Qtr 1	Qtr 2	Qtr 3	Qtr 4	Est. Error (%)
1. Total Release	Ci	- -	- -	- -	- -	

E. LIQUID VOLUMES

		Qtr 1	Qtr 2	Qtr 3	Qtr 4	Est. Error (%)
1. Batch waste released, prior to dilution	LITERS	4.75E+05	4.97E+05	4.27E+05	8.18E+05	10.00
2. Continuous waste released, prior to dilution	LITERS	- -	- -	- -	- -	
3. Dilution water used during period	LITERS	1.02E+10	1.03E+10	1.08E+10	1.58E+10	

LIQUID EFFLUENTS SUMMARY

UNIT 4
TABLE 2

NUCLIDES RELEASED	UNITS	BATCH MODE			
		Qtr 1	Qtr 2	Qtr 3	Qtr 4
Fe-55	Ci	1.60E-03	2.68E-03	1.44E-03	3.06E-03
Ni-63	Ci	4.26E-03	6.39E-03	1.60E-02	1.51E-02
Sr-89	Ci	- -	- -	- -	- -
Sr-90	Ci	- -	- -	- -	- -
Na-24	Ci	- -	- -	- -	- -
Cr-51	Ci	- -	- -	4.73E-05	1.17E-05
Mn-54	Ci	2.15E-04	2.52E-05	3.29E-05	8.28E-05
Co-57	Ci	6.91E-05	3.65E-06	2.43E-05	5.33E-05
Co-58	Ci	2.16E-03	1.75E-03	2.09E-03	4.69E-03
Fe-59	Ci	- -	4.05E-06	- -	6.50E-06
Co-60	Ci	2.08E-03	5.15E-04	8.63E-04	1.81E-03
Zn-65	Ci	- -	- -	- -	3.14E-06
Nb-95	Ci	8.86E-05	- -	- -	- -
Zr-95	Ci	2.46E-06	- -	- -	- -
Mo-99	Ci	- -	- -	- -	- -
Ru-106	Ci	- -	- -	- -	- -
Ag-110	Ci	1.83E-04	- -	4.99E-05	1.13E-06
Sn-113	Ci	5.75E-06	- -	- -	- -
Sn-117m	Ci	- -	7.25E-05	2.42E-05	3.19E-06
Sb-124	Ci	- -	5.90E-04	2.47E-04	3.62E-05
Sb-125	Ci	3.08E-04	4.70E-04	3.52E-03	5.58E-04
I-131	Ci	3.79E-05	1.86E-04	5.40E-05	1.35E-04
I-133	Ci	- -	5.05E-06	3.26E-05	9.49E-05
I-134	Ci	- -	2.22E-05	- -	- -
Cs-134	Ci	3.92E-05	2.07E-03	7.73E-04	9.35E-04
I-135	Ci	- -	1.15E-05	9.30E-06	- -
Cs-137	Ci	5.39E-05	2.28E-03	8.18E-04	1.23E-03
La-140	Ci	- -	- -	- -	- -
Ce-141	Ci	- -	- -	- -	- -
Ce-144	Ci	- -	- -	- -	- -
Ce-139	Ci	1.35E-06	- -	- -	- -
Np-239	Ci	- -	- -	- -	- -
Te-129	Ci	- -	- -	- -	- -
TOTAL FOR PERIOD	Ci	1.11E-02	1.71E-02	2.60E-02	2.78E-02

LIQUID EFFLUENTS - DISSOLVED GAS SUMMARY

NUCLIDES RELEASED	UNITS	BATCH MODE			
		Qtr 1	Qtr 2	Qtr 3	Qtr 4
Ar-41	Ci	- -	- -	- -	- -
Kr-85m	Ci	- -	- -	- -	- -
Kr-85	Ci	9.55E-04	7.12E-04	1.27E-03	3.67E-03
Xe-131	Ci	- -	- -	- -	- -
Xe-133	Ci	1.31E-02	1.82E-02	2.49E-05	5.05E-05
Xe-133m	Ci	8.30E-05	- -	- -	- -
Xe-135	Ci	7.25E-05	- -	4.67E-06	1.02E-05
Xe-138	Ci	- -	- -	- -	- -
TOTAL FOR PERIOD	Ci	1.42E-02	1.89E-02	1.30E-03	3.73E-03

LIQUID EFFLUENTS - DOSE SUMMATION

Age group : Teenager
Location : Cooling Canal

Shoreline Deposition	Dose (mrem)	% of Annual Limit
TOTAL BODY	3.93E-04	1.31E-02

TURKEY POINT UNITS 3 AND 4
ANNUAL RADIOACTIVE EFFLUENT RELEASE REPORT
JANUARY 2009 THROUGH DECEMBER 2009

GASEOUS EFFLUENTS SUMMARY

UNIT 4
TABLE 3

A. FISSION AND ACTIVATION PRODUCTS

	UNITS	Qtr 1	Qtr 2	Qtr 3	Qtr 4	Est. Error (%)
1. Total Release	Ci	1.24E+02	1.64E+00	1.35E-01	4.16E-01	2.79
2. Average release rate for the period	uCi/sec	1.60E+01	2.09E-01	1.70E-02	5.35E-02	
3. Percent of Technical Specification LImit	%	5.40E-10	4.61E-12	3.55E-13	3.13E-13	

B. IODINES

	UNITS	Qtr 1	Qtr 2	Qtr 3	Qtr 4	Est. Error (%)
1. Total Release	Ci	2.12E-02	1.60E-03	- -	9.23E-10	3.44
2. Average release rate for the period	uCi/sec	2.72E-03	2.04E-04	- -	1.16E-10	
3. Percent of Technical Specification LImit	%	3.64E+00	2.76E-01	- -	1.59E-07	

C. PARTICULATES

	UNITS	Qtr 1	Qtr 2	Qtr 3	Qtr 4	Est. Error (%)
1. Particulates with half-life >8 days	Ci	- -	- -	- -	- -	2.50
2. Average release rate for the period	uCi/sec	- -	- -	- -	- -	
3. Percent of Technical Specification LImit	%	- -	- -	- -	- -	
4. Gross Alpha Radioactivity	Ci	- -	- -	- -	- -	

D. TRITIUM

	UNITS	Qtr 1	Qtr 2	Qtr 3	Qtr 4	Est. Error (%)
1. Total Release	Ci	1.37E+00	8.10E-02	- -	4.18E-01	2.50
2. Average release rate for the period	uCi/sec	1.77E-01	1.03E-02	- -	5.38E-02	
3. Percent of Technical Specification LImit	%	1.03E-05	6.09E-07	- -	3.14E-06	

TURKEY POINT UNITS 3 AND 4
ANNUAL RADIOACTIVE EFFLUENT RELEASE REPORT
JANUARY 2009 THROUGH DECEMBER 2009

GASEOUS EFFLUENTS SUMMARY

UNIT 4
TABLE 4

A . FISSION GASES

NUCLIDES RELEASED	UNITS	BATCH MODE			
		Qtr 1	Qtr 2	Qtr 3	Qtr 4
Ar-41	Ci	- -	3.12E-05	- -	- -
Kr-85	Ci	1.42E-01	5.66E-01	5.59E-02	3.05E-01
Kr-85m	Ci	1.22E-02	- -	- -	3.32E-15
Xe-131m	Ci	4.99E-02	6.04E-02	5.30E-04	2.92E-04
Xe-133	Ci	1.58E+00	1.02E+00	7.78E-02	5.17E-02
Xe-133m	Ci	3.58E-01	5.66E-04	1.09E-03	4.46E-04
Xe-135	Ci	1.38E-03	2.03E-05	6.36E-05	3.48E-05
Xe-135m	Ci	8.28E-06	2.36E-05	- -	- -
TOTAL FOR PERIOD	Ci	2.14E+00	1.64E+00	1.35E-01	3.57E-01

NUCLIDES RELEASED	UNITS	CONTINUOUS MODE			
		Qtr 1	Qtr 2	Qtr 3	Qtr 4
Ar-41	Ci	- -	- -	- -	- -
Kr-85	Ci	- -	- -	- -	5.81E-02
Kr-85m	Ci	- -	- -	- -	- -
Kr-87	Ci	- -	- -	- -	- -
Kr-88	Ci	- -	- -	- -	- -
Xe-131m	Ci	- -	- -	- -	- -
Xe-133	Ci	1.21E+02	- -	- -	3.57E-04
Xe-133m	Ci	3.30E-01	- -	- -	- -
Xe-135	Ci	2.39E-01	- -	- -	- -
Xe-135m	Ci	- -	- -	- -	- -
Xe-138	Ci	- -	- -	- -	- -
TOTAL FOR PERIOD	Ci	1.22E+02	- -	- -	5.84E-02

B. IODINES

NUCLIDES RELEASED	UNITS	CONTINUOUS MODE			
		Qtr 1	Qtr 2	Qtr 3	Qtr 4
Br-82	Ci	- -	- -	- -	- -
I-131	Ci	2.08E-02	1.60E-03	- -	9.23E-10
I-133	Ci	4.12E-04	- -	- -	- -
TOTAL FOR PERIOD	Ci	2.12E-02	1.60E-03	- -	9.23E-10

C. PARTICULATES

NUCLIDES RELEASED	UNITS	CONTINUOUS MODE			
		Qtr 1	Qtr 2	Qtr 3	Qtr 4
Co-58	Ci	- -	- -	- -	- -
Co-60	Ci	- -	- -	- -	- -
Mn-54	Ci	- -	- -	- -	- -
Cr-51	Ci	- -	- -	- -	- -
TOTAL FOR PERIOD	Ci	- -	- -	- -	- -

TURKEY POINT UNITS 3 AND 4
ANNUAL RADIOACTIVE EFFLUENT RELEASE REPORT
JANUARY 2009 THROUGH DECEMBER 2009

DOSES DUE TO IODINE,TRITIUM, AND PARTICULATES

UNIT 4
TABLE 5

PATHWAY	BONE	LIVER	THYROID	KIDNEY	LUNG	GI-LLI	SKIN	TOTAL BODY
Cow milk - Infant (mrem)	9.21E-04	1.11E-03	3.53E-01	2.81E-04	1.41E-05	5.54E-05	--	6.58E-04
Fruit & Veg Fresh (mrem)	4.41E-05	4.66E-05	1.47E-02	2.85E-05	1.47E-06	5.35E-06	--	3.55E-05
Ground Plane (mrem)	6.13E-06	6.13E-06	6.13E-06	6.13E-06	6.13E-06	6.13E-06	7.45E-06	6.13E-06
Inhalation - Adult (mrem)	1.80E-06	8.91E-06	8.53E-04	1.07E-05	6.35E-06	6.81E-06	--	7.81E-06
TOTAL (mrem)	9.73E-04	1.17E-03	3.69E-01	3.27E-04	2.80E-05	7.36E-05	7.45E-06	7.07E-04
% of Annual Limit	6.49E-03	7.83E-03	2.46E+00	2.18E-03	1.87E-04	4.91E-04	4.97E-05	4.71E-03

DOSES DUE TO NOBLE GASES

	mrad	% of Annual Limit
Gamma Air Dose	8.05E-04	8.05E-03
Beta Air Dose	2.45E-03	1.22E-02

DOSES DUE TO IODINE,TRITIUM, AND PARTICULATES

Summation Table 5

PATHWAY	BONE	LIVER	THYROID	KIDNEY	LUNG	GI-LLI	SKIN	TOTAL BODY
Cow milk - Infant	1.90E-03	2.35E-03	7.30E-01	6.04E-04	8.00E-05	1.65E-04	--	1.41E-03
Fruit & Veg Fresh	9.11E-05	1.02E-04	3.04E-02	6.25E-05	8.34E-06	1.64E-05	--	7.87E-05
Ground Plane	1.40E-05	1.40E-05	1.40E-05	1.40E-05	1.40E-05	1.40E-05	1.70E-05	1.40E-05
Inhalation - Adult	3.71E-06	4.14E-05	1.79E-03	4.51E-05	3.63E-05	3.71E-05	--	3.91E-05
TOTAL (mrem)	2.01E-03	2.51E-03	7.63E-01	7.25E-04	1.39E-04	2.33E-04	1.70E-05	1.54E-03
% of Annual Limit	1.34E-02	1.67E-02	5.08E+00	4.84E-03	9.24E-04	1.55E-03	1.13E-04	1.03E-02

DOSES DUE TO NOBLE GASES

	mrad	% of Annual Limit
Gamma Air Dose	1.85E-03	1.85E-02
Beta Air Dose	5.61E-03	2.80E-02

TABLE 6

SOLID WASTE AND IRRADIATED FUEL SHIPMENTS

A. SOLID WASTE SHIPPED OFFSITE FOR BURIAL OR DISPOSAL

1.	TYPE OF WASTE	UNITS	12 MONTH PERIOD	% ERROR
a.	Spent resin, filters, sludge, evaporator bottoms, etc.	m^3 Ci	6.32 E +00 4.10 E +02	2.00 E+00
b.	Dry compressible waste (Note 1)	m^3 Ci	6.23 E+02 1.30 E+00	2.00 E+00
c.	Irradiated components, control rods, etc.	m^3 Ci	0.00 E+00 0.00 E+00	2.00 E+00
d.	Other: non-compressed	m^3 Ci	5.37 E+02 2.85 E-01	2.00 E+00

2. ESTIMATE OF MAJOR NUCLIDE COMPOSITION (by type of waste)

a.

NUCLIDE	UNITS	VALUE
Fe-55	%	9.47
Co-60	%	7.27
Ni-63	%	51.59
Cs-134	%	14.18
Cs-137	%	15.32

b.

NUCLIDE	UNITS	VALUE
Fe-55	%	42.19
Co-60	%	9.26
Ni-63	%	18.85
Co-58	%	17.08

TABLE 6

2. (continued)

c.

NUCLIDE	UNITS	VALUE
	None shipped	

d.

NUCLIDE	UNITS	VALUE
Co-60	%	9.10
Ni-63	%	15.31
Fe-55	%	48.62
Co-58	%	12.67

3. SOLID WASTE DISPOSITION (Note 2)

Number of Shipments	Mode of Transportation	Destination
11	Sole use truck	Energy Solutions Bear Creek Road Facility (Oak Ridge, Tn)
29	Sole use truck	Energy Solutions Gallaher Road Facility (Kingston, Tn)
3	Sole use truck	Studsvik (Erwin, Tn)
5	Sole use truck	Energy Solutions Bulk Waste Facility (Clive Utah)

B. IRRADIATED FUEL SHIPMENTS (Disposition)

None.

TABLE 6

SOLID WASTE SHIPMENTS

Waste Classification	Total Volume Cubic Feet	(Note 3) Total Curies	(Note 4) Principal Radionuclides	(Note 5) Type of Waste	R.G. 1.21 Category	(Note 6) Type of Container
Class A	4.10 E+04	1.59 E+00	None	Compressible Waste	1.b, 1.d	General Design
Class B/C	2.23 E+02	4.10 E+02	None	Primary Resin/Filters	1.a.	General Design/ Type B / Type A

No solidification or absorbing agents were used or needed in the shipment of these waste types

TABLE 6

NOTE 1: Dry compressible waste volume indicates volume shipped to a burial site following reduction by a waste processing facility.

NOTE 2: Material transported to Tennessee was consigned to licensed processing facilities for volume reduction and decontamination activities. The material remaining after processing was transported by the processor in accordance with the appropriate burial license activity limits.

NOTE 3: The total curie quantity and radionuclide composition of solid waste shipped from the Turkey Point Plant Units 3 and 4 are determined using a combination of qualitative and quantitative techniques. The Turkey Point Plant follows the guidelines in the Low Level Waste Licensing Branch Technical Position on Radioactive Waste Classification (5/11/83) for these determinations.

The most frequently used techniques for determining the total activity in a package is the dose to curie method and inference from specific activity and mass or activity concentration and volume. Activation analysis may be applied when it is appropriate. The total activity determination by any of these methods is considered to be an estimate.

The composition of radionuclides in the waste is determined by periodic off-site analysis for difficult to measure isotopes. Off-site analyses are used to establish scaling factors or other estimates for difficult to measure isotopes and principle Gamma emitters.

NOTE 4: Principle radionuclide refers to those radionuclides contained in the waste in concentrations greater than 0.01 times the concentration of the nuclide listed in Table 1 or 0.01 times the smallest concentration of the nuclide listed in Table 2 of 10 CFR 61.55.

NOTE 5: Type of waste is specified as described in NUREG 0782, Draft Environment Impact Statement on 10 CFR 61 "Licensing Requirements for Land Disposal of Radioactive Waste".

NOTE 6: Type of container refers to the transport package.

Attachment A

ODCM

Annual Review and Revision to the Offsite Dose Calculation Manual

Attached is a copy of the ODCM. The annual review and revision was completed 12/29/09. This revision to the ODCM contains no changes to setpoints or dose calculations. The requested revision is mostly administrative, implementing changes to match the Technical Specifications, correct some typographical errors and update references. These changes maintain the required level of radioactive effluent control required by 10CFR20.1302, 40 CFR 190 10 CFR 50.36a and Appendix I to 10 CFR 50 and do not adversely impact the accuracy or reliability of effluents, dose or setpoint calculations.

Below is a summary of changes to the ODCM following the Annual Review

1. Section 1.0, Administrative Controls. Following a review of the ODCM and Technical Specifications by Licensing several new entries and revisions were made to ensure the ODCM and Technical Specifications wording was the same.
    a. ODCM Subsection 1.1.4 was revised to the wording in Technical Specifications 6.14.2. ODCM page 1.1
    b. Due date of the ARERR was changed to March 1 from April 1, in accordance with Technical Specifications
    c. Added Control 1.6.7 from the Technical Specifications
    d. Revised Control 1.6.1 and 1.6.2 to match the Technical Specifications
    e. Changed 2.0 A, Objectives, to match the Technical Specifications
    f. Changed 3.0 A, Objectives, to match the Technical Specifications

2. FPL Corporate procedure NP-922 was replaced by EV-AA-100 and EV-AA-100-1000, ODCM page 1-4, 1-7, and 1-16

3. Map of the Site Boundary was removed from the ODCM, and the map of site boundary in UFSAR Chapter 2 is referenced. This is done to ensure that a single map is used to define the Controlled Area. ODCM page 1-9, 1-12

4. The definition of a SAMPLING EVOLUTION was removed to prevent removing the SPING from service when in conflict with the Technical Specifications. Page 1-9, 3-13, 3-14, 3-28, and 3-31.

5. Added the Definitions of SIITE ENVIRONS, UNPLANNED RELEASE and UNPLANNED DISCHARGES from Regulatory Guide 4.15, June 2009.

6. Updated Subsection 1.8, References, with Condition Reports related to the ODCM

7. Removed references to the Laundry Area in the Section 3.0 Radioactive Gaseous Effluents section following the plant modification to remove the laundry ductwork(PC/M 08-046). Page 3-3 and Figure 3-1

8. Revision 1 of Engineering Evaluation, PTN-ENG-SENS-05-049 was implemented and removed the end date. No change in calculation methodology due to the revision.

9. REMP Control 5.1, Control of Sampling and Analysis revised the distances to the sample locations and removed two abandoned sample locations.

10. Revised Appendix 5B, Turkey Point Groundwater Sampling Program to Support the INDUSTRY INITIATIVE on Groundwater Protection. This Appendix was the initial implementation of the site response to the Industry Initiative and has since been replaced by several site and corporate procedures (EV-AA-100, EV-AA-100-1000 and others).

OFFSITE DOSE CALCULATION MANUAL

FOR

GASEOUS AND LIQUID EFFLUENTS

FROM THE

TURKEY POINT PLANT UNITS 3 AND 4

REVISION 15

CHANGE DATED 12/29/09

Florida Power and Light Company

TURKEY POINT UNIT 3 & 4 OFFSITE DOSE CALCULATION MANUAL

LIST OF EFFECTIVE PAGES

Offsite Dose Calculation Manual

Page	Revision Date	Page	Revision Date	Page	Revision Date
i	12/29/09	2-13	12/29/09	3-16	06/04/07
ii	12/29/09	2-14	12/29/09	3-17	06/04/07
iii	12/29/09	2-15	11/22/02	3-18	06/04/07
iv	12/29/09	2-16	12/29/09	3-19	06/04/07
v	11/22/02	2-17	11/22/02	3-20	06/04/07
vi	06/04/07	2-18	11/22/02	3-21	06/04/07
vii	11/22/02	2-19	11/22/02	3-22	11/22/02
viii	11/22/02	2-20	11/22/02	3-23	11/22/02
1-1	12/29/09	2-21	11/22/02	3-24	11/22/02
1-2	11/22/02	2-22	11/22/02	3-25	12/29/09
1-3	12/29/09	2-23	11/22/02	3-26	12/29/09
1-4	12/29/09	2-24	11/22/02	3-27	11/22/02
1-5	12/29/09	2-25	11/22/02	3-28	12/29/09
1-6	11/22/02	2-26	12/29/09	3-29	11/22/02
1-7	12/29/09	2-27	11/22/02	3-30	11/22/02
1-8	12/29/09	2-28	11/22/02	3-31	12/29/09
1-9	12/29/09	2-29	11/22/02	3-32	11/22/02
1-10	12/29/09	2-30	11/22/02	3-33	11/22/02
1-11	12/29/09	2-31	11/22/02	3-34	11/22/02
1-12	11/22/02	2-32	11/22/02	3-35	11/22/02
1-13	12/29/09	2-33	11/22/02	3-36	11/22/02
1-14	11/22/02	2-34	11/22/02	3-37	12/29/09
1-15	12/29/09	3-1	12/29/09	3-38	12/29/09
1-16	12/29/09	3-2	11/22/02	3-39	11/22/02
1-17	12/29/09	3-3	12/29/09	3-40	11/22/02
2-1	12/29/09	3-4	11/22/02	3-41	11/22/02
2-2	11/22/02	3-5	06/04/07	3-42	11/22/02
2-3	11/22/02	3-6	11/22/02	3-43	11/22/02
2-4	11/22/02	3-7	12/29/09	3-44	11/22/02
2-5	12/29/09	3-8	12/29/09	3-45	11/22/02
2-6	12/29/09	3-9	11/22/02	3-46	11/22/02
2-7	12/29/09	3-10	12/29/09	3-47	11/22/02
2-8	12/29/09	3-11	12/29/09	3-48	11/22/02
2-9	12/29/09	3-12	12/29/09	3-49	11/22/02
2-10	12/29/09	3-13	12/29/09	3-50	12/29/09
2-11	12/29/09	3-14	12/29/09		
2-12	12/29/09	3-15	06/04/07		

TURKEY POINT UNIT 3 & 4 OFFSITE DOSE CALCULATION MANUAL

LIST OF EFFECTIVE PAGES

Offsite Dose Calculation Manual

Page	Revision Date	Page	Revision Date	Page	Revision Date
3-51	11/22/02	5-13	12/29/09	3B-18	11/22/02
3-52	11/22/02	5-14	11/22/02	3B-19	11/22/02
3-53	12/29/09	5-15	11/22/02	3B-20	11/22/02
3-54	12/29/09	5-16	12/23/03	3B-21	11/22/02
3-55	11/22/02	5-17	12/23/03	3B-22	11/22/02
3-56	11/22/02	5-18	12/23/03	3B-23	11/22/02
3-57	11/22/02	5-19	12/23/03	3B-24	11/22/02
3-58	11/22/02	5-20	12/23/03	3B-25	11/22/02
3-59	11/22/02	5-21	12/23/03	3B-26	11/22/02
3-60	11/22/02	5-22	12/23/03	3B-27	11/22/02
3-61	11/22/02	5-23	12/23/03	3B-28	11/22/02
3-62	11/22/02	5-24	12/23/03	3B-29	11/22/02
3-63	11/22/02	2A-1	11/22/02	3B-30	11/22/02
3-64	11/22/02	2A-2	11/22/02	3B-31	11/22/02
3-65	11/22/02	2A-3	11/22/02	3B-32	11/22/02
3-67	11/22/02	2A-4	11/22/02	3B-33	11/22/02
3-68	11/22/02	3A-1	11/22/02	3B-34	11/22/02
3-69	11/22/02	3A-2	11/22/02	3B-35	11/22/02
3-70	11/22/02	3A-3	11/22/02	3B-36	11/22/02
4-1	11/22/02	3A-4	11/22/02	3B-37	11/22/02
4-2	11/22/02	3A-5	11/22/02	3B-38	11/22/02
4-3	11/22/02	3A-6	11/22/02	3B-39	11/22/02
4-4	11/22/02	3A-7	11/22/02	3B-40	11/22/02
4-5	11/22/02	3B-1	11/22/02	3B-41	11/22/02
4-6	11/22/02	3B-2	11/22/02	3B-42	11/22/02
4-7	11/22/02	3B-3	11/22/02	3B-43	11/22/02
4-8	12/29/09	3B-4	11/22/02	3B-44	11/22/02
4-9	12/29/09	3B-5	11/22/02	3B-45	11/22/02
5-1	11/22/02	3B-6	11/22/02	3B-46	11/22/02
5-2	12/29/09	3B-7	11/22/02	3B-47	11/22/02
5-3	12/23/03	3B-8	11/22/02	3B-48	11/22/02
5-4	11/22/02	3B-9	11/22/02	3B-49	11/22/02
5-5	12/23/03	3B-10	11/22/02	3B-50	11/22/02
5-6	11/22/02	3B-11	11/22/02	3B-51	11/22/02
5-7	12/23/03	3B-12	11/22/02	3B-52	11/22/02
5-8	11/22/02	3B-13	11/22/02	3B-53	11/22/02
5-9	06/04/07	3B-14	11/22/02	3B-54	11/22/02
5-10	12/29/09	3B-15	11/22/02	3B-55	11/22/02
5-11	12/29/09	3B-16	11/22/02	3B-56	11/22/02
5-12	12/29/09	3B-17	11/22/02		

LIST OF EFFECTIVE PAGES

Offsite Dose Calculation Manual

PAGE	DATE
3B-57	11/22/02
3C-1	11/22/02
3C-2	11/22/02
3C-3	11/22/02
5A-1	11/22/02
5A-2	11/22/02
5A-3	06/04/07
5A-4	11/22/02
5B-1	12/29/09

TABLE OF CONTENTS

Introduction vii

1.0 Administrative Controls

Control 1.1 ODCM Review and Approval ..... 1 - 1

Control 1.2 Major Changes to Liquid, Gaseous and Solid Radwaste Treatment Systems ..... 1 - 2

Control 1.3 Annual Radioactive Effluent Release Report ..... 1 - 3

Control 1.4 Annual Radiological Environmental Operating Report ..... 1 - 5

Control 1.5 Definitions ..... 1 - 6

Control 1.6 Applicability of Controls ..... 1 - 14

Control 1.7 Surveillance Requirements ..... 1 - 15

Control 1.8 References..... 1 - 16

Figure 1.5-1 Intentionally Blank ..... 1 - 12

Figure 1.5-2 Plant Area Map ..... 1 - 13

2.0 Radioactive Liquid Effluents

Control 2.1 Liquid Effluent Monitoring Instrumentation, Operability and Alarm/Trip Setpoints..... 2 - 5

Control 2.2 Concentrations in Radioactive Effluents..... 2 - 14

Control 2.3 Dose From Radioactive Liquid Effluent..... 2 - 24

Control 2.4 Liquid Radwaste Treatment System ..... 2 - 31

Figure 2 - 1 Radioactive Liquid Waste ..... 2 - 4

Appendix 2A Radioactive Liquid Effluents Pathway Dose Transfer Factors ..... 2A – 1

TABLE OF CONTENTS (continued)

3.0 Radioactive Gaseous Effluents

Control 3.1	Radioactive Gaseous Effluent Monitoring Instrumentation; Operability and Alarm/Trip Setpoints	3 - 10
Control 3.2	Dose Rate From Radioactive Gaseous Effluents	3 - 27
Control 3.3	Air Dose From Noble Gases	3 - 45
Control 3.4	Dose Iodine-131, Iodine-133, Tritium, and Radioactive Material in Particulate Form	3 - 53
Control 3.5	Gaseous Radwaste Treatment System	3 - 68
Figure 3 - 1	Radioactive Gaseous Waste	3 - 8
Figure 3 - 2	Locations of Airborne Effluent Dose Calculations	3 - 9
Appendix 3A	Reference Meteorology Annual Average Atmospheric Dispersion Factors	3A - 1
Appendix 3B	Pathway-Dose Transfer Factors	3B - 1
Appendix 3C	Technical Bases for A_{eff} and TG_{131}	3C - 1

4.0 Total Dose

Control 4.1	Limits of Total Dose to Members of the Public	4 – 1

TABLE OF CONTENTS (continued

5.0 Radiological Environmental Monitoring Program

Control 5.1	Conduct of Sampling and Analysis	5 - 1
Control 5.2	Land Use Census	5 - 19
Control 5.3	Interlaboratory Comparison Program	5 - 21
Figure 5.1-1	Near Site Sampling Locations	5 - 17
Figure 5.1-2	Distant REMP Sampling Locations	5 - 18
Appendix 5A	Turkey Point Supplemental Radiological Environmental Monitoring Program	5A - 1
Appendix 5B	Turkey Point Groundwater Sampling Program to support the INDUSTRY INITIATIVE on Groundwater Protection	5B - 1

INTRODUCTION

PURPOSE

This manual describes methods which are acceptable for calculating radioactivity concentrations in the environment and potential offsite doses associated with liquid and gaseous effluents from the Turkey Point Nuclear Units. These calculations are performed to satisfy Technical Specifications and to ensure that the radioactive dose or dose commitment to any member of the public is not exceeded.

The radioactivity concentration calculations and dose estimates in this manual are used to demonstrate compliance with the Technical Specifications required by 10 CFR 50.36. The methods used are acceptable for demonstrating operational compliance with 10 CFR 20.1302, 10CFR50 Appendix I, and 40CFR190. Only the doses attributable to Turkey Point Units 3 and 4 are determined in demonstrating compliance with 40CFR190 since there are no other nuclear facilities within 50 miles of the plant. Monthly calculations are performed to verify that potential offsite releases do not exceed Technical Specifications and to provide guidance for the management of radioactive effluents. The dose receptor is described such that the exposure of any member of the public is not likely to be substantially underestimated.

Quarterly and annual calculations of committed dose are also performed to verify compliance with regulatory limits of offsite dose. For these calculations, the dose receptor is chosen on the basis of applicable exposure pathways identified in a land use survey and the maximum ground level atmospheric dispersion factor (χ/Q) at a residence, or on the basis of more conservative conditions such that the dose to any resident near the plant is not likely to be underestimated.

The radioactive effluent controls set forth in this ODCM are designed to allow operational flexibility but still maintain releases and doses "as low as is reasonably achievable"; that is, within the objectives of Appendix I, 10 CFR Part 50 and comply with the limits in 10 CFR 20.1302.

The methods specified in the OFFSITE DOSE CALCULATION MANUAL (ODCM) for calculating doses due to planned or actual releases are consistent with the guidance and methods provided in:

Regulatory Guide 1.109, "Calculation of Annual Doses to Man from Routine Releases of Reactor Effluents for the Purpose of Evaluating Compliance with 10 CFR Part 50, Appendix I," Revision 1. October 1977.

Regulatory Guide 1.111, "Methods for Estimating Atmospheric Transport and Dispersion of Gaseous Effluents in Routine Releases from Light-Water Cooled Reactors," Revision 1, July 1977.

INTRODUCTION, (continued)

Regulatory Guide 1.113, "Estimating Aquatic Dispersion of Effluents from Accidental and Routine Reactor Releases for the Purpose of Implementing Appendix I," April 1977.

The required detection capabilities for radioactive materials in liquid and gaseous waste samples are tabulated in terms of the lower limits of detection (LDD's). Detailed discussion of the LLD and other detection limits, can be found in Currie, L. A., "Lower Limit of Detection: Definition and Elaboration of a Proposed Position for Radiological Effluent and Environmental Measurements," NUREG/CR-4077 (September 1984), in HASL Procedures Manual, HASL300 and in Hartwell, J. K., "Detection Limits for Radioanalytical Counting Techniques," Atlantic Richfield Hanford Company Report ARH-SA-215 (June 1975).

SECTION 1

ADMINISTRATIVE CONTROLS

1.0 ADMINISTRATIVE CONTROLS

CONTROL 1.1 : ODCM REVIEW AND APPROVAL

1.1.1 **Responsibility for Review** The Chemistry Department Supervisor or designee shall perform a review of the ODCM annually.

1.1.2 **Documentation of Reviews** Following the performance of the annual review required by Section 1.1.1, the individual performing the review shall submit a report for PNSC approval. This report should contain the following information:

1. A copy of any requested changes to the ODCM.
2. Information necessary to support the rationale for the requested changes.
3. A determination that the requested changes will not reduce the accuracy or reliability of dose calculations or setpoint determinations.
4. If no changes are being requested, no actions are required.

1.1.3 **Institution of Changes** Changes to the ODCM shall become effective upon review and approval by the Plant General Manager, (PGM).

1.1.4 **Licensee Initiated Changes to the ODCM**

1. Shall be documented and records of reviews performed shall be retained. This documentation shall contain:
   a. Sufficient information to support the changes together with the appropriate analysis or evaluation justifying the changes, and
   b. A determination that the changes maintain the levels of radioactive effluent control required by 10 CFR 20.1302, 40 CFR 190, 10 CFR 50.36a, and Appendix 1 to 10 CFR 50, and not adversely impact the accuracy or reliability of effluent, dose, or setpoint calculations.
2. Shall become effective after approval of the Plant General Manager, and
3. Shall be submitted to the NRC in the form of a complete, legible copy of the entire ODCM as a part of or concurrent with the Annual Radioactive Effluent Release Report for the period of the report in which any change in the ODCM was made. Each change shall be identified by markings in the margin of the affected pages, clearly indicating the area of the page that was changed, and shall indicate the date (i.e., month and year) the change was implemented.

1.0 ADMINISTRATIVE CONTROLS

CONTROL 1.2 : MAJOR CHANGES TO LIQUID, GASEOUS AND SOLID RADWASTE TREATMENT SYSTEMS*

Licensee-initiated major changes to the Liquid, Gaseous, and Solid Radwaste Treatment Systems :

a. Shall be reported to the Commission in the Annual Radioactive Effluent Release Report for the period in which the evaluation was reviewed by the Plant General Manager. The discussion of each change shall contain:

(1) A summary of the evaluation that led to the determination that the change could be made in accordance with 10 CFR 50.59;

(2) Sufficient detailed information to totally support the reason for the change without benefit of additional or supplemental information;

(3) A detailed description of the equipment, components, and processes involved and the interfaces with other plant systems;

(4) An evaluation of the change, which shows the predicted releases of radioactive materials in liquid and gaseous effluents and/or quantity of solid waste that differ from those previously predicted in the License application and amendments thereto;

(5) An evaluation of the change, which shows the expected maximum exposures to a MEMBER OF THE PUBLIC in the UNRESTRICTED AREA and to the general population that differ from those previously estimated in the License application and amendments thereto;

(6) A comparison of the predicted releases of radioactive materials, in liquid and gaseous effluents and in solid waste, to the actual releases for the period prior to when the change is to be made;

(7) An estimate of the exposure to plant operating personnel as a result of the change; and

(8) Documentation of the fact that the change was reviewed and found acceptable by the PGM.

b. Shall become effective upon review and acceptance by the PGM.

* Licensees may choose to submit the information called for in this Control as part of the annual FSAR update.

1.0 ADMINISTRATIVE CONTROLS

CONTROL 1.3 : ANNUAL RADIOACTIVE EFFLUENT RELEASE REPORT *

An Annual Radioactive Effluent Release Report covering the operation of the unit during the previous 12 months of operation shall be submitted by March 1 of each year and shall include:

a. A summary of the quantities of radioactive liquid and gaseous effluents and solid waste released from the unit as outlined in Regulatory Guide 1.21, "Measuring, Evaluating, and Reporting Radioactivity in Solid Wastes and Releases of Radioactive Materials in Liquid and Gaseous Effluents from Light-Water-Cooled Nuclear Power Plants," Revision 1, June 1974, with data summarized on a quarterly basis following the format of Appendix B thereof. For solid wastes, the format for Table 3 in Appendix B shall be supplemented with three additional categories: class of solid wastes (as defined by 10 CFR Part 61), type of container (e.g., strong tight package, Type A, Type B) and solidification agent or absorbent (e.g., cement).

b. An annual summary of hourly meteorological data collected over the previous year. This annual summary may be either in the form of an hour-by-hour listing on magnetic tape of wind speed, wind direction, atmospheric stability, and precipitation (if measured), or in the form of joint frequency distributions of wind speed, wind direction, and atmospheric stability.** This same report shall include an assessment of the radiation doses due to the radioactive liquid and gaseous effluents released from the unit or station during the previous calendar year. This same report shall also include an assessment of the radiation doses from radioactive liquid and gaseous effluents to MEMBERS OF THE PUBLIC due to their activities inside the SITE BOUNDARY during the report period. All assumptions used in making these assessments, i.e., specific activity, exposure time, and location, shall be included in these reports. The meteorological conditions concurrent with the time of release of radioactive materials in gaseous effluents, as determined by sampling frequency and measurement, shall be used for determining the gaseous pathway doses. Approximate and conservative methods may be used in lieu of actual meteorological measurements. The assessment of radiation doses shall be performed in accordance with the methodology and parameters in this OFFSITE DOSE CALCULATION MANUAL (ODCM).

* A single submittal may be made for a multiple unit station. The submittal should combine those sections that are common to all units at the station; however, for units with separate radwaste systems, the submittal shall specify the releases of radioactive material from each unit.

** In lieu of submission with the Annual Radioactive Effluent Release Report, the licensee has the option of retaining this summary of required meteorological data on site in a file that shall be provided to the NRC upon request.

1.0 ADMINISTRATIVE CONTROLS

CONTROL 1.3 : Annual Radioactive Effluent Release Report *, (continued)

c. An assessment of radiation doses to the likely most exposed MEMBER OF THE PUBLIC from reactor releases from the previous calendar year and other nearby uranium fuel cycle sources, including doses from primary effluent pathways and direct radiation, for the previous calendar year to show conformance with 40 CFR Part 190, "Environmental Radiation Protection Standards for Nuclear Power Operation." Acceptable methods for calculating the dose contribution from liquid and gaseous effluents are given in Regulatory Guide 1.109, Revision 1, October 1977.

d. A list and description of UNPLANNED RELEASES from the site to UNRESTRICTED AREAS of radioactive materials in gaseous and liquid effluents made during the reporting period.

e. Any changes made during the reporting period to the OFFSITE DOSE CALCULATION MANUAL (ODCM), pursuant to Technical Specification 6.14, as well as any major change to Liquid, Gaseous, or Solid Radwaste Treatment Systems pursuant to Control 1.2. It shall also include a listing of new locations for dose calculations and/or environmental monitoring identified by the Land Use Census pursuant to Control 5.2.

f. An explanation, if applicable, as to why the inoperability of liquid or gaseous effluent monitoring instrumentation was not corrected within the time specified in Control 2.1 or 3.1, respectively; and description of the events leading to liquid holdup tanks or gas storage tanks exceeding the limits of Technical Specification 3.7.9.

g. Beginning with the Report that is due April 1, 2007, the Annual Radioactive Effluent Release Reports shall include the following information for the previous year:

   i. A list with a description of all leaks or spills that have been communicated to State and Local Officials in accordance with the INDUSTRY INITIATIVE (EV-AA-100-1000, Ground Water Protection Program, Communication/Notification Plan).

   ii. Groundwater sample results that have been taken in support of the INDUSTRY INITIATIVE (EV-AA-100, FPL Nuclear Ground Water Protection Program), unless they are from locations that are described in the Radiological Environmental Monitoring Program (REMP) and will therefore be reported in the Annual Radiological Environmental Operating Report. See Appendix 5B for details.

1.0 ADMINISTRATIVE CONTROLS

CONTROL 1.4 ANNUAL RADIOLOGICAL ENVIRONMENTAL OPERATING REPORT *

Routine Annual Radiological Environmental Operating Reports covering the operation of the unit during the previous calendar year shall be submitted prior to May 15 of the following year and shall include :

a. Summaries, interpretations, and an analysis of trends of the results of the radiological environmental surveillance activities for the report period, including a comparison with preoperational studies, with operational controls, as appropriate, and with previous environmental surveillance reports, and an assessment of the observed impacts of the plant operation on the environment. The reports shall also include the results of the Land Use Census required by Control 5.2

b. The results of analysis of all radiological environmental samples and of all environmental radiation measurements taken during the period pursuant to the locations specified in the table and figures in Control 5.1, as well as summarized and tabulated results of these analyses and measurements in the format of the table in the Radiological Assessment Branch Technical Position, Revision 1, November 1979. In the event that some individual results are not available for inclusion with the report, the report shall be submitted noting and explaining the reasons for the missing results. The missing data shall be submitted as soon as possible in a supplementary report.

c. A summary description of the Radiological Environmental Monitoring Program; at least two legible maps ** covering all sampling locations keyed to a table giving distances and directions from the centerline of one reactor; the results of licensee participation in the Interlaboratory Comparison Program and the corrective action taken if the specified program is not being performed as required by Control 5.3; reasons for not conducting the Radiological Environmental Monitoring Program as required by Control 5.1, and discussion of all deviations from the sampling schedule of Table 5.1-1; discussion of environmental sample measurements that exceed the reporting levels of Table 5.1-2 but are not the result of plant effluents, pursuant to ACTION b. of Control 5.1; and discussion of all analyses in which the LLD required by Table 5.1-3 was not achievable.

d. Results from the Turkey Point Groundwater Sampling Program taken to comply with Industry initiative.

* A single submittal may be made for a multiple unit station.

** One map shall cover stations near the SITE BOUNDARY; a second shall include the more distant stations.

1.0 ADMINISTRATIVE CONTROLS

1.5 DEFINITIONS

The defined terms of this section appear in capitalized type and are applicable throughout the Offsite Dose Calculation Manual.

ACTION

1.5.1 An ACTION shall be that part of a control which prescribes remedial measures required under designated conditions.

ANALOG CHANNEL OPERATIONAL TEST

1.5.2 An ANALOG CHANNEL OPERATIONAL TEST shall be the injection of a simulated signal into the channel as close to the sensor as practicable to verify OPERABILITY of alarm, interlock and/or trip functions. The ANALOG CHANNEL OPERATIONAL TEST shall include adjustments, as necessary, of the alarm, interlock and/or Trip Setpoints such that the setpoints are within the required range and accuracy

CHANNEL CALLIBRATION

1.5.3 A CHANNEL CALIBRATION shall be the adjustment, as necessary, of the channel such that it responds within the required range and accuracy to known values of input. The CHANNEL CALIBRATION shall encompass the entire channel including the sensors and alarm, interlock and/or trip functions and may be performed by any series of sequential, overlapping, or total channel steps such that the entire channel is calibrated.

CHANNEL CHECK

1.5.4 A CHANNEL CHECK shall be the qualitative assessment of channel behavior during operation by observation. This determination shall include, where possible, comparison of the channel indication and/or status with other indications and/or status derived from independent instrument channels measuring the same parameter.

1.0 ADMINISTRATIVE CONTROLS

1.5 DEFINITIONS (continued)

DOSE EQUIVALENT I-131

1.5.5 DOSE EQUIVALENT I-131 shall be that concentration of I-131 (microCurie/gram) which alone would produce the same thyroid dose as the quantity and isotopic mixture of I-131, I-132, I-133, I-134, and I-135 actually present. The thyroid dose conversion factors used for this calculation shall be those listed in Table III of TID-14844, "Calculation of Distance Factors for Power and Test Reactor Sites" or Table E-7 of NRC Regulatory Guide 1.109, Revision 1, October 1977.

FREQUENCY NOTATION

1.5.6 The FREQUENCY NOTATION specified for the performance of Surveillance Requirements shall correspond to the intervals defined in Table 1.5-1

GAS DECAY TANK SYSTEM

1.5.7 A GAS DECAY TANK SYSTEM shall be any system designed and installed to reduce radioactive gaseous effluents by collecting Reactor Coolant System off gases from the Reactor Coolant System and providing for delay or holdup for the purpose of reducing the total radioactivity prior to release to the environment.

INDUSTRY INITIATIVE

1.5.8 Nuclear Energy Institute Initiative on Managing Situations Involving Inadvertent Radiological Releases into Groundwater (The INDUSTRY INITIATIVE has been adopted through EV-AA-01, Fleet Ground Water Protection Program).

INITIAL CALIBRATION

1.5.9 INITIAL CALIBRATION – An INITIAL CALIBRATION is the determination of the detector sensitivity when the detector is exposed in a known geometry to radiation from sources of known energies and activity levels traceable to National Institute of Standards & Technology (NIST). The vendor usually performs this calibration. Furthermore, subsequent CHANNEL CALIBRATIONS should include the use of a TRACEABLE SOURCE positioned in a reproducible geometry with respect to the sensor whose effect on the system was established at the time of the initial calibration. This CHANNEL CALIBRATION will establish the dynamic capabilities of a detector, electronics and power supplies in such a way as to ensure that the detector will perform its basic task of sensing radiation at the predetermined minimum detectable concentration based on the Initial Calibration.

MEMBER(S) OF THE PUBLIC

1.5.10 MEMBER(S) OF THE PUBLIC shall mean any individual except when that individual is receiving an occupational dose.

1.0 ADMINISTRATIVE CONTROLS

1.5 DEFINITIONS (continued)

OFFSITE DOSE CALCULATION MANUAL

1.5.11 The OFFSITE DOSE CALCULATION MANUAL (ODCM) shall contain the methodology and parameters used in the calculation of offsite doses resulting from radioactive gaseous and liquid effluents, in the calculation of gaseous and liquid effluent monitoring Alarm/Trip setpoints, and in the conduct of the Radiological Environmental Monitoring Program. The ODCM shall also contain (1) the Radioactive Effluent Controls and Radiological Environmental Monitoring Programs required by Tech Spec Section 6.8.4.F and (2) descriptions of the information that should be included in the Annual Radioactive Effluent Release Report and the Annual Radiological Environmental Operating Report required by Controls 1.3 and 1.4.

OPERABLE - OPERABILITY

1.5.12 A system, subsystem, train, component or device shall be OPERABLE or have OPERABILITY when it is capable of performing its specified function(s), and when all necessary attendant instrumentation, controls, electrical power, cooling or seal water, lubrication or other auxiliary equipment that are required for the system, subsystem, train, component, or device to perform its function(s) are also capable of performing their related support function(s).

OPERATIONAL MODE - MODE

1.5.13 An OPERATIONAL MODE (i.e., MODE) shall correspond to any one inclusive combination of core reactivity condition, power level, and average reactor coolant temperature specified in Table 1.5-2

PROCESS CONTROL PROGRAM

1.5.14 The PROCESS CONTROL PROGRAM (PCP) shall contain the current formulas, sampling, analysis, tests, and determinations to be made to ensure that processing and packaging of solid radioactive wastes based on demonstrated processing of actual or simulated wet solid wastes will be accomplished in such a way as to assure compliance with 10 CFR Parts 20, 61, and 71 and Federal and State regulations, burial ground requirements, and other requirements governing the disposal of radioactive waste.

1.0 ADMINISTRATIVE CONTROLS

1.5 DEFINITIONS (continued)

PURGE - PURGING

1.5.15 PURGE or PURGING shall be any controlled process of discharging air or gas from a confinement to maintain temperature, pressure, humidity, concentration or other operating condition, in such a manner that replacement air or gas is required to purify the confinement.

RATED THERMAL POWER

1.5.16 RATED THERMAL POWER shall be a total reactor core heat transfer rate to the reactor coolant of 2300 MWt

REPORTABLE EVENT

1.5.17 A REPORTABLE EVENT shall be any of those conditions specified in Section 50.73 of 10 CFR Part 50.

SITE BOUNDARY

1.5.18 The SITE BOUNDARY shall mean that line beyond which the land or property is not owned, leased, or otherwise controlled by the licensee, see UFSAR Chapter 2.

SITE ENVIRONS

1.5.19 The SITE ENVIRONS are the locations outside of the nuclear power plant systems, structures, or components as described in the final safety analysis report or the ODCM.

SOURCE CHECK

1.5.20 A SOURCE CHECK shall be the qualitative assessment of channel response when the channel sensor is exposed to a source of increased radioactivity.

THERMAL POWER

1.5.21 THERMAL POWER shall be the total reactor core heat transfer rate to the reactor coolant.

TRACEABLE SOURCE

1.5.22 TRACEABLE SOURCE – Radiation sources that are **related** not only to the reference sources that were used for the INITIAL CALIBRATION but also certified by the National Institute of Standards & Technology (NIST). These transfer sources will calibrate the detector by positioning it in a reproducible geometry as prescribed by the INITIAL CALIBRATION.

1.0 ADMINISTRATIVE CONTROLS

UNPLANNED DISCHARGE

1.5.23 An UNPLANNED DISCHARGE is the unintended or unexpected discharge of liquid or airborne radioactive material to the unrestricted area. Examples of an unplanned discharge would include:

1. The unintentional discharge of a wrong gas decay tank.
2. The unintentional discharge of a bulk liquid radioactive waste tank to the unrestricted area.
3. The failure of a radiation monitor to perform the automatic alarm/trip function and radioactive material is discharged to the environment.

UNPLANNED RELEASE

1.5.24 An UNPLANNED RELEASE is the unintended or unexpected release of liquid or airborne radioactive material to the onsite environment. Examples would include:

1. A plant occurrence that requires reporting under 10CFR50.72 or 10CFR 50.73 limits.
2. Releases that do not have prepared documentation and reach the site environs, but are not anticipated operational occurrences.

UNRESTRICTED AREA

1.5.25 An UNRESTRICTED AREA shall mean an area, access to which is neither limited nor controlled by the licensee.

1.0 ADMINISTRATIVE CONTROLS

1.5 DEFINITIONS (continued)

VENTILATION EXHAUST TREATMENT SYSTEM

1.5.26 A VENTILATION EXHAUST TREATMENT SYSTEM shall be any system designed and installed to reduce gaseous radioactive iodine or radioactive material in particulate form in effluents by passing ventilation or vent exhaust gases through charcoal absorbers and/or HEPA filters for the purpose of removing iodine or particulates from the gaseous exhaust stream prior to the release to the environment. Such a system is not considered to have any effect on noble gas effluents. Engineered Safety Features Atmospheric Cleanup Systems are not considered to be VENTILATION EXHAUST TREATMENT SYSTEM components.

VENTING

1.5.27 VENTING shall be the controlled process of discharging air or gas from a confinement to maintain temperature, pressure, humidity, concentration, or other operating condition, in such a manner that replacement air or gas is not provided or required during VENTING. Vent, used in system names, does not imply a VENTING process.

TABLE 1.5-1

FREQUENCY NOTATION

NOTATION	FREQUENCY
S	At least once per 12 hours.
D	At least once per 24 hours.
W	At least once per 7 days.
M	At least once per 31 days.
Q	At least once per 92 days.
SA	At least once per 184 days.
R	At least once per 18 months.
S/U	Prior to each reactor startup.
NA	Not applicable.
P	Completed prior to each batch release.

1.0 ADMINISTRATIVE CONTROLS

1.5 DEFINITIONS (continued)

TABLE 1.5-2

OPERATIONAL MODES

MODE	REACTIVITY CONDITION, K_{eff}	% RATED THERMAL POWER *	AVERAGE COOLANT TEMPERATURE
1. POWER OPERATION	≥ 0.99	> 5%	≥ 350 °F
2. STARTUP	> 0.99	≤ 5%	≥ 350 °F
3. HOT STANDBY	< 0.99	0	≥ 350 °F
4. HOT SHUTDOWN	< 0.99	0	350 °F > Tavg > 200 °F
5. COLD SHUTDOWN	< 0.99	0	≤ 200 °F
6. REFUELING**	≤ 0.95	0	≤ 140 °F

* Excluding decay heat.

** Fuel in the reactor vessel with the vessel head closure bolts less than fully tensioned or with the head removed.

1.0 ADMINISTRATIVE CONTROLS

1.5 DEFINITIONS (continued)

FIGURE 1.5 - 1

INTENTIONALLY LEFT BLANK

1.0 ADMINISTRATIVE CONTROLS

FIGURE 1.5 - 2

PLANT AREA MAP

Gaseous Effluent Release Points
1. Plant Vent (Unit 4 Spent Fuel Pool Vent)
2. Unit 3 Spent Fuel Pool Vent
3. Unit 3 Air Ejector Vent
4. Unit 4 Air Ejector Vent

Liquid Effluent Release Points
5. Effluent from Liquid Radwaste System
6. Effluent from Liquid Radwaste System
7. Unit 3 Steam Generator Blowdown
8. Unit 4 Steam Generator Blowdown
9. Storm Drain
10. Storm Drain
11. Storm Drain
12. Storm Drain

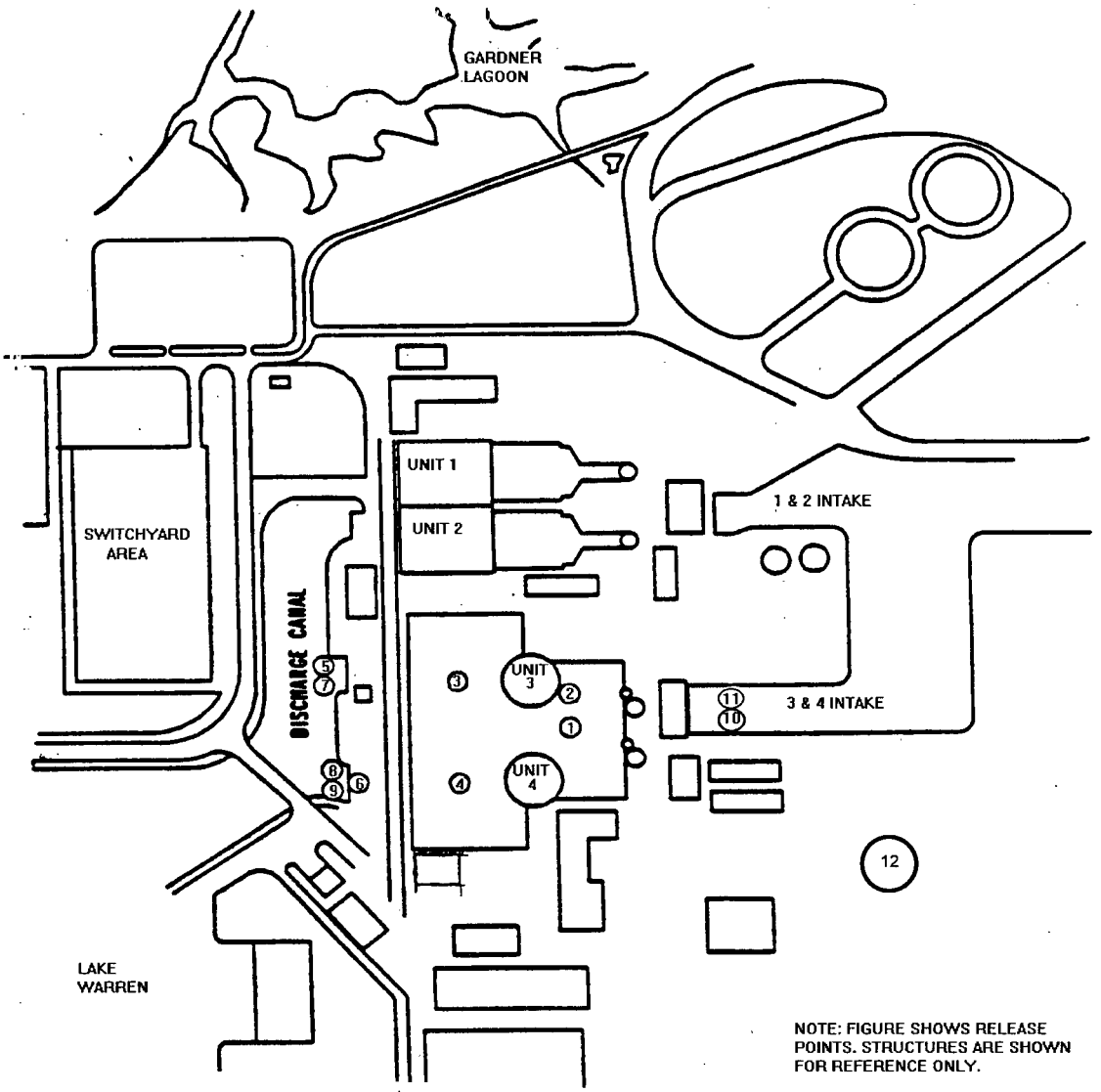

1.0 ADMINISTRATIVE CONTROLS

1.6 APPLICABILITY OF CONTROLS

1.6.1 Compliance with the Controls, contained in this ODCM, is required during the OPERATIONAL MODES or other conditions specified therein; except that upon failure to meet the Control, the associated ACTION requirements shall be met, except as provided in Control 1.6.7.

1.6.2 Noncompliance with a specification shall exist when the requirements of the Control and associated ACTION requirements are not met within the specified time intervals, except as provided in Control 1.6.7. If the Control is restored prior to expiration of the specified time intervals, completion of the ACTION requirements is not required.

1.6.3 When a Control is not met, except as provided in the associated ACTION requirements, within 1 hour action shall be initiated to place the unit, as applicable, in :

a. At least HOT STANDBY within the next 6 hours,
b. At least HOT SHUTDOWN within the following 6 hours, and
c. At least COLD SHUTDOWN within the subsequent 24 hours.

Where corrective measures are completed that permit operation under the ACTION requirements, the action may be taken in accordance with the specified time limits as measured from the time of failure to meet the Control. Exceptions to these requirements are stated in the individual control.

This control is not applicable in MODES 5 or 6.

1.6.4 Entry into an OPERATIONAL MODE or other specified condition shall not be made when the conditions for the Control are not met and the associated ACTION requires a shutdown if they are not met within a specified time interval. Entry into an OPERATIONAL MODE or specified condition may be made in accordance with ACTION requirements when conformance to them permits continued operation of the facility for an unlimited period of time. This provision shall not prevent passage through or to OPERATIONAL MODES as required to comply with ACTION requirements. Exceptions to these requirements are stated in the individual controls.

1.0 ADMINISTRATIVE CONTROLS

1.6 APPLICABILITY OF CONTROLS (continued)

1.6.5 Controls including the associated ACTION requirements shall apply to each unit individually unless otherwise indicated as follows:

a. Whenever the Control refers to systems or components which are shared by both units, the ACTION requirements will apply to both units simultaneously.

b. Whenever the Control applies to only one unit, this will be identified in the APPLICABILITY section of the Control: and

c. Whenever certain portions of a Control contain operating parameters, Setpoints, etc., which are different for each unit, this will be identified in parentheses, footnotes or body of the requirement.

1.6.6 Special reports shall be submitted to the Regional Administrator of the Regional Office of the NRC within the time period specified for each report as stated in the Controls within sections 2.0, 3.0, 4.0, or 5.0.

1.6.7 Equipment removed from service or declared inoperable to comply with ACTION requirements may be returned to service under administrative controls solely to perform testing required to demonstrate its OPERABILITY or the OPERABILITY of other equipment. This is an exception to Controls 1.6.1 and 1.6.2 for the system returned to service under administrative control to perform the testing required to demonstrate OPERABILITY.

1.7 SURVEILLANCE REQUIREMENTS

1.7.1 Surveillance Requirements shall be met during the OPERATIONAL MODES or other conditions specified for individual Controls unless otherwise stated in an individual Surveillance Requirement.

1.7.2 Each Surveillance Requirement shall be performed within the specified time interval with a maximum allowable extension not to exceed 25% of the surveillance interval.

1.7.3 Failure to perform a Surveillance Requirement within the allowed surveillance interval, defined by Control 1.7.2, shall constitute noncompliance with the OPERABILITY requirements for a Control. The time limits of the ACTION requirements are applicable at the time it is identified that a Surveillance Requirement has not been performed. The ACTION requirements may be delayed for up to 24 hours to permit the completion of the surveillance when the allowable outage time limits of the ACTION requirements are less than 24 hours. Surveillance Requirements do not have to be performed on inoperable equipment.

1.0 ADMINISTRATIVE CONTROLS

1.7 SURVEILLANCE REQUIREMENTS (continued)

1.7.4 Entry into an OPERATIONAL MODE or other specified condition shall not be made unless the Surveillance Requirement(s) associated with a Control has been performed within the stated surveillance interval or as otherwise specified. This provision shall not prevent passage through or to OPERATIONAL MODES as required to comply with ACTION requirements.

1.7.6 Surveillance Requirements shall apply to each unit individually unless otherwise indicated as stated in Control 1.6.5 for individual controls or whenever certain portions of a control contain surveillance parameters different for each unit, which will be identified in parentheses, footnotes or body of the requirement.

1.8 REFERENCES

1. Condition Report (CR) 2005-17141, REMP QA Audit
2. PTN-ENG-SENS-05-049, Temporary Suspension of Continuous Monitoring via the Plant Vent and Unit 3 Spent Fuel Pool SPINGS for the performance of Required Maintenance
3. PTN-ENG-SENS-06-048, Rev 7, The Calculation Developing the Iodine and Particulate Activity Compensation Factors for the Steam Jet Air Ejector Vent Monitors
4. Condition Report (CR) 2006-17093, Nuclear Energy Institute Industry Initiative on Managing Situations Involving Inadvertent Radiological Releases into Groundwater
5. Condition Report (CR) 2006-17607, Sampling and Monitoring Groundwater at PTN
6. EV-AA-01, Fleet Ground Water Protection Program
7. PC/M 08-046, Auxiliary Exhaust Duct Removal and CR 2008-36865, Abandon Laundry Ductwork
8. CR 2008-11943, SPING Operability
9. CR 2008-22263, Site Boundary Changes

SECTION 2

RADIOACTIVE LIQUID EFFLUENTS

2.0 RADIOACTIVE LIQUID EFFLUENTS

OBJECTIVES & SYSTEM DESCRIPTION

A. Objectives

To provide calculational methodology needed to assure compliance with 10CFR20 and 10CFR50, which require the following determinations and surveillance:

- The concentration of radioactive materials released in liquid effluents.
- The concentrations of radioactive materials released are maintained within the limits of Control 2.2.
- Quarterly and annual cumulative dose contributions to a member of the public from radioactivity in liquid effluents released from each unit to unrestricted areas are maintained within the limits of Control 2.3.
- Projected doses due to liquid releases to unrestricted areas are maintained within the limits of Control 2.4.
- Operation of appropriate portions of the Liquid Radwaste Treatment System when projected doses exceed limits of Control 2.4.
- The operability of Liquid Radwaste System is verified by meeting Controls 2.2 and 2.3

B. Bases

Radioactive liquid effluents from Turkey Point Units 3 and 4 are released through radiation monitors which provide an alarm and automatic termination of radioactive releases. There are three discharge points from the units: steam generator blowdown from each unit and a common radwaste monitor tank discharge. The liquid effluent monitoring instrumentation and controls at Turkey Point for controlling and monitoring normal radioactive releases in accordance with Turkey Point Technical Specification 6.8.4.f consist of the following :

1 Liquid Radwaste System

Potentially radioactive liquid waste from Units 3 and 4 Chemistry laboratories, containment sumps, floor drains, showers and miscellaneous sources are collected in waste hold up tanks. These wastes are processed through a demineralizer system and the effluent stored in one of the three waste monitor tanks or one of two monitor tanks (Refer to Figure 2-1). Laundry wastes are normally segregated and sent to one of two monitor tanks

2.0 RADIOACTIVE LIQUID EFFLUENTS

OBJECTIVES & SYSTEM DESCRIPTION (continued)

B. Bases, Liquid Radwaste System, continued

Liquid waste in the waste monitor tanks and monitor tanks are isolated and recirculated for a minimum of one (1) tank volume prior to sampling. Liquids in these tanks are released after sampling and analysis in accordance with ODCM Table 2.2-1. The discharge from the waste monitor and monitor tanks is monitored by a radioactive liquid effluent monitor. Since these liquid effluents are a mixture from both Units 3 and 4, the measured releases from the common discharge point are apportioned equally to both Units 3 & 4. The dose limit per reactor is applied to the common discharge point when routine releases are made. This ensures that the dose limit of any single unit is not exceeded by the site.

2 Steam Generator Blowdown

Units 3 and 4 steam generator blowdown can be discharged directly from the blowdown flashtanks to the condenser cooling water mixing basin. The activity of each steam generator blowdown discharge (a composite) is monitored prior to the Blowdown Flash Tank for Unit 3 and 4 respectively. Releases from the steam generator blowdown are sampled and analyzed in conformance with ODCM Table 2.2-1.

3 Storm Drains

Storm drains from Units 3 and 4 discharge into both the circulating water intake and the condenser cooling water mixing basin. Storm drains are sampled and analyzed in accordance with ODCM Table 2.2-1.

4 Radioactivity Concentration in Liquid Waste

The concentration of radionuclides in liquid waste is determined by sampling and analysis in accordance with ODCM Table 2.2-1. If a radionuclide is below its LLD, and the calculated LLD concentration is below the LLD concentration value specified in ODCM Table 2.2-1 then it is not reported as being present in the sample. When the radionuclide's calculated LLD is greater than the LLD listed in ODCM Table 2.2-1, the calculated LLD should be assigned as the activity of the radionuclide.

2.0 RADIOACTIVE LIQUID EFFLUENTS

OBJECTIVES & SYSTEM DESCRIPTION (continued)

Bases, Liquid Radwaste System (continued)

5. Radioactivity Concentration in Water at the Restricted Area Boundary

   Control 2.2 requires that the concentration of radioactive material, other than noble gases, in liquid effluent released into an unrestricted area not exceed 10 times the effluent concentration specified in 10 CFR Part 20, Appendix B, Table 2, Column 2.

   A maximum concentration, 2×10^{-4} μCi/ml, for noble gas entrained in aqueous releases into an unrestricted area applies separately since the potential exposure route, immersion in water, differs from that upon which Part 20, Appendix B is based.

   Radioactive material in liquid effluent from Turkey Point is diluted by condenser cooling water from fossil units 1 and 2 and from nuclear units 3 and 4 in the condenser cooling water mixing basin. Water in the basin flows into an on site closed cooling canal system. Liquid effluent does not actually leave the site in a surface discharge. For the purpose of compliance with Control 2.2, the total condenser cooling water flow from operating condenser cooling water pumps at the four units is assumed for dilution and the restricted area boundary is assumed to be at the end of the condenser cooling water mixing basin where water enters the cooling canal system.

   Methods 2.2.1 and 2.2.2 describe methods used to assess compliance with Control 2.2. Effluent monitor alarm/trip setpoints are computed on the same basis as described in Methods 2.1.1 and 2.1.2. If an alarm/trip setpoint is not exceeded, aqueous effluents are deemed to comply with Control 2.2.

   The operability of the Liquid Radwaste System is considered verified by virtue of meeting Controls 2.1 and 2.2. Normally, batch releases from the Laundry, and continuous releases from Steam Generator Blowdown are not processed. When necessary, the Laundry and the Steam Generator Blowdown can be diverted to the Liquid Radwaste System for processing.

2.0 RADIOACTIVE LIQUID EFFLUENTS

FIGURE 2-1

RADIOACTIVE LIQUID WASTE

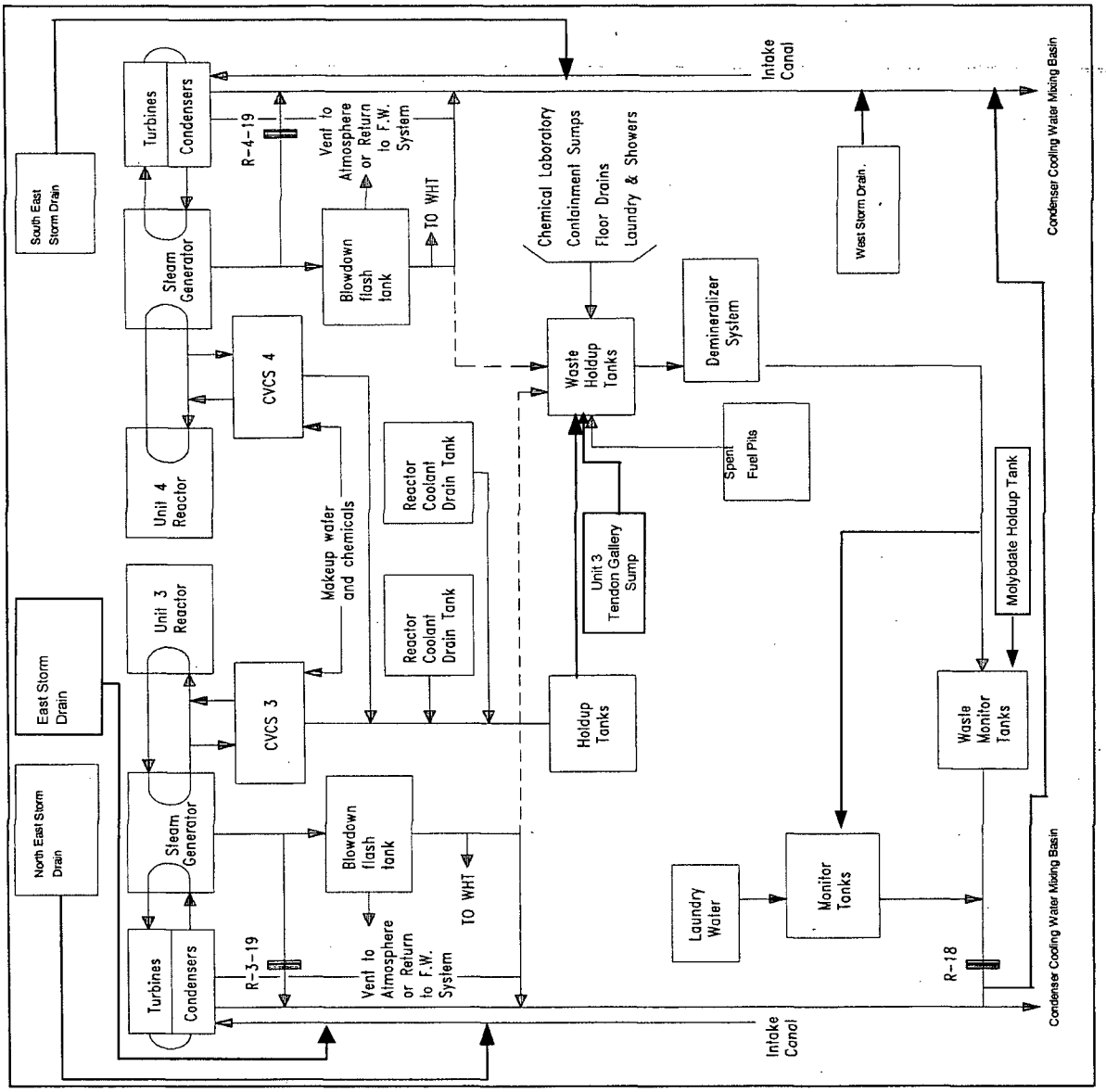

2.0 RADIOACTIVE LIQUID EFFLUENTS

CONTROL 2.1: RADIOACTIVE LIQUID EFFLUENT MONITORING INSTRUMENTATION, OPERABILITY AND ALARM/TRIP SETPOINTS

The radioactive liquid effluent monitoring instrumentation channels shown in Table 2.1-1 shall be OPERABLE with their Alarm/Trip Setpoints set to ensure that the limits of Control 2.2 are not exceeded. The Alarm/ Trip Setpoints of these channels shall be determined and adjusted in accordance with the methodology and parameters in this OFFSITE DOSE CALCULATION MANUAL (ODCM).

APPLICABILITY : At all times, except as indicated in Table 2.1-1

ACTION :

a. With a radioactive liquid effluent monitoring instrumentation channel Alarm/Trip Setpoint less conservative than required by the above Control, immediately suspend the release of radioactive liquid effluents monitored by the affected channel or declare the channel inoperable, or change the setpoint so it is acceptably conservative.

b. With less than the minimum number of radioactive liquid effluent monitoring instrumentation channels OPERABLE, take the ACTION shown in Table 2.1-1. Restore the inoperable instrumentation to OPERABLE status within 30 days and, if unsuccessful, explain in the next Annual Radioactive Effluent Release Report pursuant to Administrative Control 1.3, why this inoperability was not corrected in a timely manner.

c. The provisions of Administrative Control section 1.6.3 are not applicable.

SURVEILLANCE REQUIREMENTS

2.1.1 Each radioactive liquid effluent monitoring instrumentation channel shall be demonstrated OPERABLE by performance of the CHANNEL CHECK, SOURCE CHECK, CHANNEL CALIBRATION and ANALOG CHANNEL OPERATIONAL TEST at the frequencies shown in Table 2.1-2.

2.0 RADIOACTIVE LIQUID EFFLUENTS

CONTROL 2.1 : RADIOACTIVE LIQUID EFFLUENT MONITORING INSTRUMENTATION, OPERABILITY AND ALARM/TRIP SETPOINTS (continued)

TABLE 2.1-1

RADIOACTIVE LIQUID EFFLUENT MONITORING INSTRUMENTATION

INSTRUMENT	MINIMUM CHANNELS OPERABLE	ACTION
1. Gross Radioactivity Monitors Providing Alarm and Automatic Termination of Release		
a. Liquid Radwaste Effluent Line	1 *	2.1.1
b. Steam Generator Blowdown Effluent Line	1 **	2.1.2
2. Flow Rate Measurement Devices		
a. Liquid Radwaste Effluent Line	1 *	2.1.3
b. Steam Generator Blowdown Effluent Line	1 ** per Steam generator	2.1.3

* Applicable during liquid effluent releases.

** Applicable during blow down operations.

2.0 RADIOACTIVE LIQUID EFFLUENTS

CONTROL 2.1 : RADIOACTIVE LIQUID EFFLUENT MONITORING INSTRUMENTATION, OPERABILITY AND ALARM/TRIP SETPOINTS, (continued)

TABLE 2.1-1, (Continued)

TABLE NOTATION

ACTION 2.1.1 With the number of channels OPERABLE less than required by the Minimum Channels OPERABLE requirement, effluent releases via this pathway may continue provided that prior to initiating a release:

a. At least two independent samples are analyzed in accordance with the surveillance requirement of Control 2.2.1, and

b. At least two technically qualified members of the facility staff independently verify the release rate calculations and discharge valve line-up;

Otherwise, suspend release of radioactive effluents via this pathway.

ACTION 2.1.2 With the number of channels OPERABLE less than required by the Minimum Channels OPERABLE requirement, effluent releases via this pathway may continue provided grab samples are analyzed for gross (beta or gamma) radioactivity at a lower limit of detection of no more than 1×10^{-7} microcuries/ml or analyzed isotopically (Gamma) at a lower limit of detection of at least 5×10^{-7} microcuries/ml :

a. At least once per 12 hours when the specific activity of the secondary coolant is greater than 0.01 microcuries/gram DOSE EQUIVALENT I-131, or

b. At least once per 24 hours when the specific activity of the secondary coolant is less than or equal to 0.01 microcuries/gram DOSE EQUIVALENT I-131.

ACTION 2.1.3 With the number of channels OPERABLE less than required by the Minimum Channels OPERABLE requirement, effluent releases via this pathway may continue provided the flow rate is estimated at least once per 4 hours during actual releases. Pump performance curves may be used to estimate flow.

2.0 RADIOACTIVE LIQUID EFFLUENTS

CONTROL 2.1 : RADIOACTIVE LIQUID EFFLUENT MONITORING INSTRUMENTATION, OPERABILITY AND ALARM/TRIP SETPOINTS (continued)

TABLE 2.1-2
RADIOACTIVE LIQUID EFFLUENT MONITORING INSTRUMENTATION SURVEILLANCE REQUIREMENTS

	INSTRUMENT	CHANNEL CHECK	SOURCE CHECK	CHANNEL CALIBRATION	ANALOG CHANNEL OPERATIONAL TEST
1.	Gross Radioactivity Monitors Providing Alarm and Automatic Termination of Release				
	a. Liquid Radwaste Effluents Line	D	P	R (2)	Q (1)
	b. Steam Generator Blowdown Effluent Line	D	M	R (2)	Q (1)
2.	Flow Rate Measurement Devices				
	a. Liquid Radwaste Effluent Line	D (3)	N.A.	R	Q
	b. Steam Generator Blowdown Effluent Lines	D (3)	N.A.	R	Q

TABLE NOTATIONS

(1) The ANALOG CHANNEL OPERATIONAL TEST shall also demonstrate that automatic isolation of this pathway and control room alarm annunciation occurs if the instrument indicates measured levels above the Alarm/Trip Setpoint.

(2) The initial CHANNEL CALIBRATION shall be performed using one or more of the reference standards certified by the National Institute of Standards and Technology (NIST) or using standards that have been obtained from suppliers that participate in measurement assurance activities with NIST. These standards shall permit calibrating the system over its intended range of energy and measurement range. For subsequent CHANNEL CALIBRATION, sources that have been related to the initial calibration shall be used.

(3) CHANNEL CHECK shall consist of verifying indication of flow during periods of release. CHANNEL CHECK shall be made at least once per 24 hours on days on which continuous, periodic, or batch releases are made.

2.0 RADIOACTIVE LIQUID EFFLUENTS

CONTROL 2.1 : RADIOACTIVE LIQUID EFFLUENT MONITORING INSTRUMENTATION, OPERABILITY AND ALARM/TRIP SETPOINTS (continued)

METHOD 2.1.1 : LIQUID EFFLUENT MONITOR SURVEILLANCES

The surveillances of Gross Radioactivity Monitors Providing Alarm and Automatic Termination of Release and Flow Rate Measurement Devices are scheduled by a site procedure.

METHOD 2.1.2 : ESTABLISHING LIQUID EFFLUENT MONITOR ALARM AND TRIP SETPOINTS

The alarm/trip setpoint for each liquid effluent radiation monitor is derived from 10 times the effluent concentration limits provided in 10 CFR Part 20, Appendix B, Table 2, Column 2 applied in the condenser cooling water mixing basin outflow. Radiation monitoring and isolation points are located in the steam generator blowdown lines, R-3-19, R-4-19, and the liquid waste disposal system line, R-18, through which radioactive waste effluent is eventually discharged into the canal basin (see Figure 2-1).

The alarm/trip setpoint for each liquid effluent monitor is based upon the measurements of radioactivity in a batch of liquid to be released or in the continuous aqueous discharge. Sample measurements are performed according to ODCM Table 2.2-1. If the calculated setpoint is less than the existing setpoint, the setpoint shall be reduced to the new setpoint. If the calculated setpoint is greater than the existing setpoint, the setpoint may remain at the lower value or be increased to the calculated value. Typically, the setpoint calculated using equation 2.1-1 yields a value that exceeds the range of the monitor.

A. Setpoint for a Batch Release

The liquid radwaste effluent line radiation monitor alarm setpoint for a batch release is determined with the equation below or a method which gives a lower setpoint value, as described in approved plant procedures.

$$S_b = \frac{A_b \; S_f}{FEC_b} \bullet g_b + Bkg \qquad \text{Eqn 2.1-1}$$

where:

S_b = radiation monitor alarm setpoint for a batch release, (cpm)

A_b = laboratory counting rate (cpm/ml) or activity concentration (μCi/ml) of sample from batch tank

2.0 RADIOACTIVE LIQUID EFFLUENTS

CONTROL 2.1 : RADIOACTIVE LIQUID EFFLUENT MONITORING INSTRUMENTATION, OPERABILITY AND ALARM/TRIP SETPOINTS (continued)

METHOD 2.1.2 : ESTABLISHING LIQUID EFFLUENT MONITOR ALARM AND TRIP SETPOINTS (continued)

FEC_b= fraction of unrestricted area Effluent Concentration (EC) present in the condenser cooling water mixing basin outflow due to a batch release, determined in method 2.2.A.

g_b = detection efficiency of monitor detector; ratio of effluent radiation monitor counting rate to laboratory counting rate or activity concentration in a given batch sample (cpm per cpm/ml or cpm per μCi/ml) which ever units are consistent with the units A_b.

Bkg = background (cpm)

S_f = A factor to allow for multiple sources from different or common release points. The allowable operating setpoints are administratively controlled by assigning a fraction of the total allowable release to each of the release sources. The assigned fraction for releases made from the Liquid Radwaste System is 0.7.

B. Setpoint for a Continuous Release

The liquid effluent line radiation monitor alarm setpoint for a continuous release is determined with the equation below or by a method which gives a lower setpoint value, as described in approved plant procedures.

$$S_c = \frac{A_c \; S_f}{FEC_c} \bullet g_c + Bkg \qquad \text{Eqn 2.1-2}$$

where:

S_c = radiation monitor alarm setpoint for a continuous release, (cpm)

A_c = laboratory counting rate (cpm/ml) or activity concentration (μCi/ml) of sample from continuous release

FEC_c = fraction of unrestricted area EC present in the condenser cooling water mixing basin outflow due to a continuous release determined in method 2.2.B.

2.0 RADIOACTIVE LIQUID EFFLUENTS

CONTROL 2.1 : RADIOACTIVE LIQUID EFFLUENT MONITORING INSTRUMENTATION, OPERABILITY AND ALARM/TRIP SETPOINTS (continued)

METHOD 2.1.2 : ESTABLISHING LIQUID EFFLUENT MONITOR ALARM AND TRIP SETPOINTS, (continued)

g_c = detection efficiency of monitor detector; ratio of effluent radiation monitor counting rate to laboratory counting rate or activity concentration in a given continuous release sample, (cpm per cpm/ml or cpm per μCi/ml), whichever units are consistent with the units A_c.

S_f = A factor to allow for multiple sources from different or common release points. The allowable operating setpoints will be controlled administratively by assigning a fraction of the total allowable release to each of the release sources. The assigned fraction for releases made from each unit's Steam Generator Blowdown System is 0.1.

BASIS 2.1 : RADIOACTIVE LIQUID EFFLUENT MONITORING INSTRUMENTATION

The radioactive liquid effluent instrumentation is provided to monitor and control, as applicable, the releases of radioactive materials in liquid effluents during actual or potential releases of liquid effluents. The Alarm/Trip Setpoints for these instruments shall be calculated and adjusted in accordance with the methodology and parameters in the ODCM to ensure that the alarm/trip will occur prior to exceeding ten times the limits of 10 CFR Part 20. Equations 2.1-1 and 2.1-2 ensure that this limit is not exceeded. Since the resulting count rate of these equations typically yields a value higher than the monitor is capable of measuring, the actual trip, high, and alert alarm setpoints are set as described in approved plant procedures. The OPERABILITY and use of this instrumentation is consistent with the requirements of General Design Criteria 60, 63, and 64 of Appendix A to 10 CFR Part 50. The factors established for S_f are based on allowing 10% of all releases to be made from each unit's Steam Generator Blowdown System, 70% from the Liquid Radwaste System, and 10% from unmonitored releases such as storm drains.

2.0 RADIOACTIVE LIQUID EFFLUENTS

CONTROL 2.1 : RADIOACTIVE LIQUID EFFLUENT MONITORING INSTRUMENTATION, OPERABILITY AND ALARM/TRIP SETPOINTS (continued)

METHOD 2.1.2 : ESTABLISHING LIQUID EFFLUENT MONITOR ALARM AND TRIP SETPOINTS (continued)

EXAMPLE CALCULATION : Liquid Radwaste Effluent Monitor Alarm Setpoint for a Batch Release

The monitor alarm setpoint for liquid batch releases is based on the fraction of the unrestricted area EC (FEC) that will be present in the condenser cooling water mixing basin as a result of the activity concentration present in the liquid radwaste to be released.

The monitor setpoint can be determined using equation from Method 2.1.2 for batch and continuous releases respectively.

Example:

$$S_b = \frac{A_b \bullet S_f}{FEC_b} \bullet g_b + Bkg$$

where:

S_b = radiation monitor alarm setpoint for a batch release, (cpm)

A_b = laboratory counting rate (cpm/ml) or activity concentration (μCi/ml) of sample from batch tank

FEC_b = fraction of unrestricted area EC present in the condenser cooling water mixing basin outflow due to a batch release; determined from equation 2.2-2.

g_b = detection response of monitor detector; ratio of effluent radiation monitor counting rate to laboratory counting rate or activity concentration in a given batch sample (cpm per cpm/ml or cpm per μCi/ml which ever units are consistent with the units A_b).

Bkg = background, (cpm)

S_f = A factor to allow for multiple sources from different or common release points. The allowable operating setpoints will be controlled administratively by assigning a fraction of the total allowable release to each of the release sources. The assigned fraction for releases made from the Liquid Radwaste System is 0.7.

2.0 RADIOACTIVE LIQUID EFFLUENTS

CONTROL 2.1 : RADIOACTIVE LIQUID EFFLUENT MONITORING INSTRUMENTATION, OPERABILITY AND ALARM/TRIP SETPOINTS (continued)

Determine the monitor setpoint when:

FEC_b = 6×10^{-4}

A_b = 8.85×10^{-5} µCi/ml

g_b = 15,000 cpm/µCi/ml

S_f = 0.7

Bkg = 10,000 cpm

$$S_b = \frac{8.85 \times 10^{-5} \times .7}{6 \times 10^{-4}} \times 1.5 \times 10^4 + 1 \times 10^4 = 11{,}550 \text{ cpm}$$

2.0 RADIOACTIVE LIQUID EFFLUENTS

CONTROL 2.2 : CONCENTRATIONS IN RADIOACTIVE LIQUID EFFLUENTS

The concentration of radioactive material released in liquid effluents to UNRESTRICTED AREAS (see Figure 1.5-1) shall be limited to 10 times the concentrations specified in 10 CFR Part 20, Appendix B, Table 2, Column 2 for radionuclides other than dissolved or entrained noble gases. For dissolved or entrained noble gases, the concentration shall be limited to 2×10^{-4} micro Curie/ml total activity.

APPLICABILITY : At all times.

ACTION : With the concentration of radioactive material released in liquid effluents to UNRESTRICTED AREAS exceeding the above limits, immediately restore the concentration to within the above limits.

SURVEILLANCE REQUIREMENTS

2.2.1 Radioactive liquid wastes shall be sampled and analyzed according to the sampling and analysis program of Table 2.2-1.

2.2.2 The results of the radioactivity analyses shall be used in accordance with the methodology and parameters in the ODCM to assure that the concentrations at the point of release are maintained within the limits of this Control.

2.0 RADIOACTIVE LIQUID EFFLUENTS

CONTROL 2.2 : CONCENTRATIONS IN RADIOACTIVE LIQUID EFFLUENTS, (continued)

TABLE 2.2-1

RADIOACTIVE LIQUID WASTE SAMPLING AND ANALYSIS PROGRAM

LIQUID RELEASE TYPE	SAMPLING FREQUENCY	MINIMUM ANALYSIS FREQUENCY	TYPE OF ACTIVITY ANALYSIS	LOWER LIMIT OF DETECTION (LLD)[1], µCi/ml
1. Batch Waste Release Tanks[2]	P Each Batch	P Each Batch	Principle Gamma Emitters [3]	5×10^{-7}
			I-131	1×10^{-6}
	P One Batch/M	M	Dissolved and Entrained Gases (Gamma Emitters)	1×10^{-5}
	P Each Batch	M Composite [4]	H-3	1×10^{-5}
			Gross Alpha	1×10^{-7}
	P Each Batch	Q Composite [4]	Sr-89, Sr-90	5×10^{-8}
			Fe-55	1×10^{-6}
2. Continuous Releases [5] a. Steam Generator Blowdown[7]	W	W	Principal Gamma Emitters [3]	5×10^{-7}
			I-131	1×10^{-6}
	M [8]	M [8]	Dissolved and Entrained Gases (Gamma Emitters)	1×10^{-5}
	W [8]	M [8] Composite [6]	H-3	1×10^{-5}
			Gross Alpha	1×10^{-7}
	W [8]	Q [8] Composite [6]	Sr-89, Sr-90	5×10^{-8}
			Fe-55	1×10^{-6}
b. Storm Drain	M	M	Principle Gamma Emitters [3]	5×10^{-7}
			I-131	1×10^{-6}

TABLE 2.2-1 (continued)

TABLE NOTATIONS

(1) The LLD is the smallest concentration of radioactive material in a sample that will be detected with 95% probability with only 5% probability of falsely concluding that a blank observation represents a "real" signal. For a particular measurement system, which may include radio chemical separation :

$$LLD = \frac{4.66\ s_b}{E \cdot V \cdot (2.22 \times 10^6) \cdot Y \cdot [\exp(-\lambda \Delta t)]}$$

Where :

LLD = the "a priori" lower limit of detection as defined above for a blank sample (microCurie per unit mass or volume),

s_b = the counting rate of a blank sample, or the standard deviation of the background counting rate, as appropriate (counts per minute)

E = the counting efficiency (counts per disintegration),

V = the sample size (units of mass or volume),

2.22×10^6 = the number of disintegrations per minute per micro Curie,

Y = the fractional radio chemical yield, when applicable,

λ = the radioactive decay constant for the particular radionuclide, and

Δt = the elapsed time between the midpoint of sample collection and the time of counting (for plant effluents, not environmental samples).

Typical values of E, V, Y, and Δt should be used in the calculation.

It should be recognized that the LLD is defined as an a priori (before the fact) limit representing the capability of a measurement system, and not as an a posteriori (after the fact) limit for a particular measurement.

(2) A batch release is the discharge of liquid wastes of a discrete volume. Prior to sampling for analyses, each batch shall be isolated, and then thoroughly mixed by a method described in the ODCM to assure representative sampling.

CONTROL 2.2 : CONCENTRATIONS IN RADIOACTIVE LIQUID EFFLUENTS, (continued)

TABLE 2.2-1 (Continued)

TABLE NOTATIONS (Continued)

(3) The principal gamma emitters for which the LLD specification exclusively applies are the following radionuclides: Mn-54, Fe-59, Co-58, Co-60, Zn-65, Mo-99, Cs-134, Cs-137, Ce-141, and Ce-144. This list does not mean that only these nuclides are to be considered. Other gamma peaks that are identifiable, together with those of the above nuclides, shall also be analyzed and reported in the Annual Radioactive Effluent Release Report pursuant to Control 1.3.

Nuclides, which are below the LLD for the analysis, should not be reported as being present at the LLD for that nuclide. When a radionuclide's calculated LLD is greater than it's listed LLD limit, the calculated LLD should be assigned as the activity of the radionuclide; or, the activity of the radionuclide should be calculated using measured ratios with those radionuclides which are routinely identified and measured.

(4) A composite sample is one in which the quantity of liquid sampled is proportional to the quantity of liquid waste discharged and in which the method of sampling employed results in a specimen that is representative of the liquids released.

(5) A continuous release is the discharge of liquid wastes of a non discrete volume, e.g., from a volume of a system that has an input flow during the continuous release.

(6) Prior to analyses, all samples taken for the composite shall be thoroughly mixed in order for the composite sample to be representative of the effluent release.

(7) Sampling and analysis of steam generator blowdown is not required during Mode 5 or 6.

(8) Sampling and analysis of steam generator blowdown on the applicable unit is only necessary for these species when primary to secondary leakage is occurring as indicated by the condenser air ejector noble gas activity monitor. (See Control 3.1, Table 3.1-1, Item 2a).

2.0 RADIOACTIVE LIQUID EFFLUENTS

CONTROL 2.2 : CONCENTRATIONS IN RADIOACTIVE LIQUID EFFLUENTS, (continued)

METHOD 2.2 : AQUEOUS CONCENTRATION

The diluted concentration of radionuclides in the condenser cooling water mixing basin outflow is estimated with the equation :

$$C_{zi} = C_i \bullet \frac{F_1}{F_2} \quad Eqn.\ 2.2-1$$

where:

C_{zi} = concentration of radionuclide i in the condenser cooling water mixing basin outflow, (μCi/ml)

C_i = concentration of radionuclide i in liquid radwaste released, (μCi/ml)

F_1 / F_2 = dilution

F_1 = flow in radioactive liquid discharge line, (gal/min).*

F_2 = total condenser cooling water flow, (gal/min).*
This value has been conservatively estimated at 156,000 gpm per circulating water pump for units 3 & 4, and 134,000 gpm per circulating water pump for units 1 & 2, based on expected condenser fouling and pump curves.

* F_1 and F_2 may have any suitable but identical units of flow, (volume/time).

A. Batch Release

A sample of each batch of liquid radwaste is analyzed before release for I-131 and other principal gamma emitters. With the activity concentration in a batch sample, b, based on the total isotopic activity, the fraction of the unrestricted area effluent concentration (FEC) due to a batch release is derived by using the ratio of the individual isotopic concentrations and their related effluent concentration (EC).

2.0 RADIOACTIVE LIQUID EFFLUENTS

CONTROL 2.2 : CONCENTRATIONS IN RADIOACTIVE LIQUID EFFLUENTS, (continued)

METHOD 2.2 : Aqueous Concentration, batch release, (continued)

FEC_b is estimated with the equation :

$$FEC_b = \sum_i \frac{C_{zi}}{EC_i} \text{ for gamma emitting isotopes} + \sum_i \frac{C_{zi}}{EC_i} \text{ for beta emitting isotopes}$$

Eqn 2.2-2

where:

FEC_b = fraction of the unrestricted area EC present in the condenser cooling water mixing basin outflow due to a batch release.

C_{zi} = concentration of radionuclide i in the water in the condenser cooling water mixing basin out flow, (μCi/ml); determined from equation 2.2-1.

EC_i = ten times the activity concentration limit in water of radionuclide i according to 10 CFR 20, Appendix B, Table 2, Column 2, (μCi/ml).

The factor for beta emitting isotopes is an adjustment to account for radionuclides not measured prior to release but measured in the quarterly and monthly samples per ODCM Table 2.2-1, i.e., Sr-89, Sr-90, Fe-55, H-3. This value is calculated from previously measured data.

A gross beta-gamma analysis of a batch release may be performed when an isotopic analysis is not available. The fraction of the unrestricted EC due to a batch release using the gross beta-gamma analysis can be estimated by:

$$FEC_b = \frac{C_b}{5x10^{-7}} \qquad \text{Eqn. 2.2-3}$$

where:

C_b = Concentration of radioactivity in the water in the condenser cooling water mixing basin outflow due to a batch release.

$5x10^{-7}$ = The activity concentration limit in water of the most restrictive isotope routinely released in liquid effluents, from a pressurized water reactor, according to 10 CFR 20, Appendix B, Table 2, Column 2, (μCi/ml).

2.0 RADIOACTIVE LIQUID EFFLUENTS

CONTROL 2.2 : CONCENTRATIONS IN RADIOACTIVE LIQUID EFFLUENTS, (continued)

METHOD 2.2 : Aqueous Concentration, batch release, (continued)

B. Continuous Release

Continuous aqueous discharges are sampled and analyzed according to the schedule in ODCM Table 2.2-1. The fraction of the unrestricted area EC present in a continuously discharged radioactive stream, FEC_c, is derived from an isotopic analyses. The fraction of the unrestricted area EC can be derived using the ratio of the individual isotopic concentrations and their related ECs. FEC_c is estimated with the equation:

$$FEC_c = \sum_i \frac{C_{zi}}{EC_i} \text{ for gamma emitting isotopes} + \sum_i \frac{C_{zi}}{EC_i} \text{ for beta emitting isotopes}$$

Eqn 2.2-4

where:

FEC_c = fraction of the unrestricted area EC present in the condenser cooling water mixing basin outflow due to a continuous release

C_{zi} = concentration of radionuclide i in the water in the condenser cooling water mixing basin outflow determined from equation 2.2-1, (μCi/ml)

EC_i = ten times the activity concentration limit in water of radionuclide i according to 10CFR20, Appendix B, Table 2, Column 2, (μCi/ml)

The factor for beta emitting isotopes is an adjustment to account for radionuclides not measured prior to release but measured in the quarterly and monthly samples per ODCM Table 2.2-1, i.e., Sr-89, Sr-90, Fe-55, H-3. This value is calculated from previously measured data.

A gross beta-gamma analysis of a continuous release may be performed when an isotopic analysis is not available. The fraction of the unrestricted EC due to a continuous release using the gross beta-gamma analysis can be estimated by:

$$FECc = \frac{Cc}{5x10^{-7}}$$

Eqn. 2.2-5

where:

C_c = Concentration of radioactivity in the water in the condenser cooling water mixing basin outflow due to a continuous release.

$5x10^{-7}$ = The activity concentration limit in water of the most restrictive isotope routinely released in liquid effluents, from a pressurized water reactor, according to 10 CFR 20, Appendix B, Table 2, Column 2, (μCi/ml).

2.0 RADIOACTIVE LIQUID EFFLUENTS

CONTROL 2.2 : CONCENTRATIONS IN RADIOACTIVE LIQUID EFFLUENTS, (continued)

METHOD 2.2 : Aqueous Concentration, continuous, (continued)

C. Cumulative Release

To ensure that the unrestricted area EC is not exceeded during periods of multiple releases, the fraction of EC determined for each type of release is summed to determine a total release fraction using the following equation:

$$FEC_T = FEC_b + FEC_c \qquad \text{Eqn 2.2-6}$$

Where:

FEC_T = the total fraction of the unrestricted area EC released.

FEC_b = the fraction of the unrestricted area EC due to batch releases

FEC_c = the fraction of the unrestricted area EC due to continuous releases.

BASIS 2.2 :

This control applies to the release of radioactive materials in liquid effluents from all units at the site. The specification of "10 times the concentration levels specified in 10 CFR Part 20, Appendix B, Table 2, Column 2" provides the datum against which the liquid effluent monitor setpoints are determined pursuant to Control 2.1. In essence, Control 2.2 is an instantaneous limit.

The concentration limit for "dissolved or entrained noble gases" is based upon the assumption that Xe-135 is the controlling radioisotope and its associated Maximum Permissible Concentration (MPC) in air (submersion) was converted to an equivalent concentration in water using the methods described in International Commission on Radiological Protection (ICRP) Publication 2.

Adherence to Controls 2.3 and 2.4 provide assurance that levels of radioactive materials in bodies of water in UNRESTRICTED AREAS will, on the average, be a small fraction of the concentration limits and result in exposures to MEMBERS OF THE PUBLIC within the objectives of Appendix I of 10 CFR Part 50 and 40 CFR 190.

Control 2.2 permits the flexibility of operation, compatible with considerations of health and safety, to provide a dependable source of power even under circumstances that temporarily result in elevated releases, but still within the limit as specified in 10 CFR Part 20.1302 (b)(2)(ii).

CONTROL 2.2 : CONCENTRATIONS IN RADIOACTIVE LIQUID EFFLUENTS, (continued)

EXAMPLE CALCULATION: Determination of Radionuclide Concentration in the Condenser Cooling Water Mixing Basin, C_{zi}, from a Liquid Release .

$$C_{zi} = C_i \bullet \frac{F_1}{F_2}$$

where:

C_i = concentration of radionuclide i in the liquid radwaste released, μCi/ml, obtained from nuclide analyses report for the liquid release sample taken prior to release.

F_1 = Flow rate from monitor tank = 100 gal/min.

F_2 = Total condenser cooling water flow = 156,000 gpm/circulating pump; total capacity Units 3 and 4 = 8 pumps x 156,000 = 1,248,000 gal/min.

Note: When determining actual release concentrations, contact units 1 and 2 to determine how many, if any, circulating pumps were running during release. The flow of these pumps must be included when determining F_2.

Example:

For a monitor tank analysis (from Nuclide Analysis Report), C_i is equal to the following concentrations:

	C_i	F_1/F_2	C_{zi}
Co-60	8×10^{-5}	8×10^{-5}	6.4×10^{-9}
Co-58	2×10^{-6}	8×10^{-5}	1.6×10^{-10}
Cr-51	7×10^{-7}	8×10^{-5}	5.6×10^{-11}
Mn-54	5×10^{-6}	8×10^{-5}	4.0×10^{-10}
Cs-137	5×10^{-7}	8×10^{-5}	4.0×10^{-11}
I-131	3×10^{-7}	8×10^{-5}	2.4×10^{-11}
Fe-55	4×10^{-5}	8×10^{-5}	3.2×10^{-09}
Sr-90	2×10^{-7}	8×10^{-5}	1.6×10^{-11}
H-3	7×10^{-2}	8×10^{-5}	5.6×10^{-6}

F_1/F_2 = 100 gpm/1,248,000 gpm = 8×10^{-5}

2.0 RADIOACTIVE LIQUID EFFLUENTS

CONTROL 2.2 : CONCENTRATIONS IN RADIOACTIVE LIQUID EFFLUENTS, (continued)

EXAMPLE CALCULATION: Determination of the Fraction of the Unrestricted Area EC from a Batch Release of Liquid Radwaste, FEC_b

$$FEC_b = \sum_i \frac{C_{zi}}{EC_i} \text{ for gamma emitting isotopes } + \sum_i \frac{C_{zi}}{EC_i} \text{ for beta emitting isotopes}$$

where:

C_{zi} = Radionuclide concentration in condenser cooling water mixing basin, μCi/ml

EC_i = Ten times the effluent concentration from 10 CFR 20 Appendix B, Table 2, Column 2, μCi/ml

Example:

Σ FEC for a release must be less than 1 or the release cannot be made. Σ FEC for the batch release in example 1 above is calculated as follows:

Nuclide	C_{zi}	EC_i*	C_{zi}/EC_i	FEC_b
Co-60	6.4×10^{-9}	3×10^{-5}	2.1×10^{-4}	2.1×10^{-4}
Co-58	1.6×10^{-10}	8×10^{-5}	2.0×10^{-6}	2.0×10^{-6}
Cr-51	5.6×10^{-11}	5×10^{-3}	1.1×10^{-8}	1.1×10^{-8}
Mn-54	4.0×10^{-10}	3×10^{-4}	1.3×10^{-6}	1.3×10^{-6}
Cs-137	4.0×10^{-11}	1×10^{-5}	4.0×10^{-6}	4.0×10^{-6}
I-131	2.4×10^{-11}	1×10^{-5}	2.4×10^{-6}	2.4×10^{-6}
Fe-55	3.2×10^{-09}	1×10^{-4}	3.2×10^{-5}	3.2×10^{-5}
Sr-90	1.6×10^{-11}	5×10^{-7}	3.2×10^{-5}	3.2×10^{-5}
H-3	5.6×10^{-6}	1×10^{-3}	5.6×10^{-3}	5.6×10^{-3}
Σ	5.6×10^{-6}	--	5.9×10^{-3}	5.9×10^{-3}

*Use ten times the value of the Effluent Concentration (EC) values given in 10 CFR 20, Appendix B, Table 2, Column 2.

The fraction of unrestricted area EC from a continuous release is calculated in the same manner as the batch release shown above.

2.0 RADIOACTIVE LIQUID EFFLUENTS

CONTROL 2.3 : DOSE FROM RADIOACTIVE LIQUID EFFLUENT

The dose or dose commitment to a MEMBER OF THE PUBLIC from radioactive materials in liquid effluents released, from each unit, to UNRESTRICTED AREAS (see Figure 1.5-1) shall be limited:

a. During any calendar quarter to less than or equal to 1.5 mrem to the whole body and to less than or equal to 5 mrems to any organ, and

b. During any calendar year to less than or equal to 3 mrems to the whole body and to less than or equal to 10 mrems to any organ.

APPLICABILITY : At all times.

ACTION :

a. With the calculated dose from the release of radioactive materials in liquid effluents exceeding any of the above limits, prepare and submit to the Commission within 30 days, pursuant Control 1.6.6, a Special Report that identifies the cause(s) for exceeding the limit(s) and defines the corrective actions that have been taken to reduce the releases and the proposed corrective actions to be taken to assure that subsequent releases will be in compliance with the above limits.

b. The provisions of Administrative Control section 1.6.3 are not applicable.

SURVEILLANCE REQUIREMENTS

2.3.1 Cumulative dose contributions from liquid effluents for the current calendar quarter and the current calendar year shall be determined in accordance with the methodology and parameters in this ODCM at least once per 31 days.

2.0 RADIOACTIVE LIQUID EFFLUENTS

CONTROL 2.3 : DOSE FROM RADIOACTIVE LIQUID EFFLUENT, (continued)

METHOD 2.3 :

Control 2.3 requires the dose or dose commitment to a member of the public from radioactive materials released in liquid effluents from each unit to unrestricted areas be limited to ≤ 1.5 mrem to the whole body and ≤ 5 mrem to any organ during any calendar quarter and to ≤ 3 mrem to the whole body and ≤ 10 mrem to any organ during any calendar year.

Surveillance 2.3.1 requires the dose or dose commitment to a member of the public due to radioactive material released in liquid effluent to be calculated on a cumulative quarterly and annual basis at least once per 31 days. The condenser cooling water basin and closed canal system which receives aqueous effluent is entirely on FP&L property, without surface discharge off site, and FP&L does not permit members of the public to use the water. As a result, potential exposure of a member of the public to radioactive material originating in aqueous effluent is limited to irradiation of persons by canal shoreline deposits.

Surveillance 2.3.1 is satisfied by calculating the cumulative total body dose to a person who may be irradiated by radionuclides deposited on the cooling canal shoreline from radioactive liquid effluent. Compliance with the organ dose limit is assured as long as the total body dose is below its limit.

The model that is used to evaluate doses due to radioactivity in liquid effluent is :

$$D = 0.23 \sum_k \sum_i A_i^{shoreline} \bullet \frac{C_{ik} \bullet F_{lk} \bullet t_k}{V \bullet \lambda_i^e} \qquad \text{Eqn. 2.3-1}$$

where:

D = total body or organ dose due to irradiation by radionuclides on the shorelines which originated in a liquid effluent release, (mrem)

0.23 = units conversion constant = $\frac{1Ci}{10^6 uCi} \times \frac{60\min}{hr} \times \frac{3785ml}{gal}$

A_i = transfer factor relating a unit aqueous concentration of radionuclide i to a dose commitment rate to specific organs and the total body of an exposed person. Values for A_i are tabulated in Appendix 2A, (mrem/Ci•gal/min)

C_{ik} = the concentration of radionuclide i in the undiluted liquid waste to be discharged that is represented by sample k, (μCi/ml)

2.0 RADIOACTIVE LIQUID EFFLUENTS

CONTROL 2.3 : DOSE FROM RADIOACTIVE LIQUID EFFLUENT, (continued)

METHOD 2.3, (continued)

F_{lk} = liquid waste discharge flow during release represented by sample k, (gal/min)

V = cooling canal effective volume, approximately 3.75×10^9 gallons

t_k = period of time (hours) during which liquid waste represented by sample k is discharged

λ_i^e = effective decay constant ($\lambda_i + F_3/V$, min^{-1}).

where:

λ_i = The radioactive decay constant

F_3 = Canal-ground water interchange flow, approximately 2.25×10^5 gal/min

Radionuclide concentrations (C_{ik}) in effluent are measured by the sampling and analysis program specified in Control 2.2 Table 2.2-1. Typically, more than 90 percent of the potential irradiation from radionuclides deposited along the shoreline is due to Mn-54, Co-58, Co-60, Cs-134, and Cs-137. Of these radionuclides, Co-60 has the maximum dose transfer factor, A_i. Thus, for the purpose of assessing compliance with Surveillance 2.3.1, the radioactive effluent source term may be either:

a) principal gamma emitters measured by the effluent sampling and analysis program, or

b) all gamma emitters measured by the effluent sampling and analysis program assumed to be Co-60.

The dose that is calculated for the purpose of assessing compliance with Surveillance 2.3.1 is based on all gamma emitting isotopes being Co-60.
The dose calculated when preparing the Annual Radioactive Effluent Release Report uses the concentration of principal gamma emitters measured by the effluent sampling and analysis program.

2.0 RADIOACTIVE LIQUID EFFLUENTS

CONTROL 2.3 : DOSE FROM RADIOACTIVE LIQUID EFFLUENT, (continued)

BASIS 2.3 :

This specification applies to the release of radioactive materials in liquid effluents from each unit at the site. For units with shared Radwaste Systems, the liquid effluents from the shared system are to be proportional among the units sharing that system.

This Control is provided to implement the requirements and guidelines of Appendix I, 10 CFR Part 50. The ACTION statements provide the required operating flexibility and at the same time implement the guides set forth in Appendix I to assure that the releases of radioactive material in liquid effluents to UNRESTRICTED AREAS will be kept "as low as is reasonably achievable."

The dose calculation methodology and parameters in this ODCM implement the requirements in Appendix I that conformance with the guides of Appendix I be shown by calculational procedures based on models and data, such that the actual exposure of a MEMBER OF THE PUBLIC through appropriate pathways is unlikely to be substantially underestimated. The equations specified in the ODCM for calculating the doses due to the actual release rates of radioactive materials in liquid effluents are consistent with the methodology provided in Regulatory Guide 1.109, "Calculation of Annual Doses to Man from Routine Releases of Reactor Effluents for the Purpose of Evaluating Compliance with 10 CFR Part 50, Appendix I," Revision 1, October 1977 and Regulatory Guide 1.113, "Estimating Aquatic Dispersion of Effluents from Accidental and Routine Reactor Releases for the Purpose of Implementing Appendix I," April 1977.

The Radiological Environmental Monitoring Program verifies, other than periodic trace levels of tritium, exposure to members of the public due to the canal-ground water interchange through the hydrological shift into the ocean is not a significant pathway.

The usage factors contained in Reg Guide 1.109, table E-5, show that the teenager is the most exposed receptor for shoreline deposition. For purposes of calculating dose due to liquid effluents to a member of the public, the teenager will be considered the target receptor. Since Florida Power & Light restricts access to the canal system, and does not allow drinking, fishing, or bathing in the canals; the only exposure pathway is to the total body from shoreline deposition.

2.0 RADIOACTIVE LIQUID EFFLUENTS

CONTROL 2.3 : DOSE FROM RADIOACTIVE LIQUID EFFLUENT, (continued)

Example Calculation: Determination of Cumulative Dose from Radioactive Liquid Effluents.

The dose or dose commitment to a member of the public from radioactive liquid effluent shall be calculated on a cumulative quarterly and cumulative annual basis at least once per 31 days.

The dose or dose commitment from radioactive liquid releases at Turkey Point is based on the irradiation of a teenager on the canal shoreline, the most restrictive age group and is calculated using equation 2.3-1.

$$D = 0.23 \sum_k \sum_i A_i^{shoreline} \bullet \frac{C_{ik} \bullet F_{lk} \bullet t_k}{V \bullet \lambda_i^e}$$

where:

D = total body or organ dose due to irradiation by radionuclides on the shoreline which originated in a liquid effluent release, (mrem).

0.23 = units conversion constant = $\frac{1Ci}{10^6\,uCi} \times \frac{60\,\text{min}}{hr} \times \frac{3785ml}{gal}$

A_i = transfer factor relating a unit aqueous concentration of radionuclide i (μCi) to dose commitment rate to specific organs and the total body of an exposed person tabulated in Appendix A, (mrem/Ci . min/gal).

C_{ik} = the concentration of radionuclide in the undiluted liquid waste to be discharged that is represented by sample k, (uCi/ml).

F_{lk} = liquid waste discharge flow during release represented by sample k, (gal/min)

V = cooling canal effective volume, approximately 3.75 x 10^9 gallons.

t_k = period of time (hours) during which liquid waste represented by sample k is discharged.

λ_i^e = effective decay constant (λ_i + F_3/ V, minute $^{-1}$).

where:

λ_i = the radioactive decay constant

F_3 = canal-ground water interchange flow, approximately 2.25 x 10^5 gal/min

2.0 RADIOACTIVE LIQUID EFFLUENTS

CONTROL 2.3 : DOSE FROM RADIOACTIVE LIQUID EFFLUENT (continued)

Example Calculation: Determination of Cumulative Dose from Radioactive Liquid Effluents, (continued).

Example:

The concentration of radionuclides in the undiluted liquid waste discharges to the condenser cooling water mixing basin during the month of February was determined by summing the results of the radionuclide analysis sheets for each sample taken prior to the release. The total concentration of each radionuclide was:

Radionuclide	C_{ik}(μCi/ml)
Co-60	4×10^{-4}
Co-58	1×10^{-5}
Cr-51	4×10^{-6}
Cs-134	5×10^{-6}
Cs-137	2×10^{-6}
Mn-54	2×10^{-5}
I-131	1×10^{-6}

Note that the above data represents Σ_k ; that is, the sum over the number of releases for the period of February.

The average flow rate from the monitor tanks during the releases (F_{ik}) = 100 gpm.

The total period of time for the releases (t_k) was 15 hours.

The cumulative whole body dose to a teen due to these releases is determined by summing the dose from each radionuclide as shown in the following worksheet.

2.0 RADIOACTIVE LIQUID EFFLUENTS

CONTROL 2.3 : DOSE FROM RADIOACTIVE LIQUID EFFLUENT, (continued)

Example Calculation: Determination of Cumulative Dose from Radioactive Liquid Effluents, (continued)

WORKSHEET FOR DOSE TO WHOLE BODY FROM LIQUID RELEASE

Radio-nuclide	C_{ik}	A_i	F_{ik}	t_t	$(0.23)A_i \times C_{ik} \times F_{ik} \times t_t$	λ_i	F_3/V	λ^*_i	$V\lambda^*_i$	D
Co-60	4E-4	9.45E+3	100	15	1.30E+3	2.53E-7	6.0E-5	6.02E-5	2.26E+5	5.8E-3
Co-58	1E-5	1.67E+2	100	15	5.76E-1	6.80E-6	6.0E-5	6.68E-5	2.50E+5	2.3E-6
Cr-51	4E-6	2.06E+0	100	15	2.84E-3	1.74E-5	6.0E-5	7.74E-5	2.90E+5	9.8E-9
Cs-134	5E-6	3.08E+3	100	15	5.31E+0	6.39E-7	6.0E-5	6.06E-5	2.27E+5	2.3E-5
Cs-137	2E-6	4.54E+3	100	15	3.13E+0	4.37E-8	6.0E-5	6.00E-5	2.25E+5	1.4E-5
Mn-54	2E-5	6.09E+2	100	15	4.20E+0	1.54E-6	6.0E-5	6.15E-5	2.31E+5	1.8E-5
I-131	1E-6	7.59E+0	100	15	2.62E-3	5.98E-5	6.0E-5	1.19E-4	4.46E+5	5.9E-9
									Dose to Teenager from all Nuclides, Σ_i =	5.9E-3

Total whole body dose to teen from irradiation by radionuclides on the shoreline from radioactivity released in month of February is 5.9E-3 mrem. Cumulative dose for first quarter would be sum of January dose + February dose. Cumulative annual dose in this example would be the same as the quarterly dose.
In this case the organ dose is the same as the whole body dose since the dose transfer factors for direct radiation is the same.

2.0 RADIOACTIVE LIQUID EFFLUENTS

CONTROL 2.4 : LIQUID RADWASTE TREATMENT SYSTEM

The Liquid Radwaste Treatment System shall be OPERABLE and appropriate portions of the system shall be used to reduce releases of radioactivity when the projected doses due to the liquid effluent, from each unit, to UNRESTRICTED AREAS (see Figure 1.5-1) would exceed 0.06 mrem to the whole body or 0.2 mrem to any organ in a 31-day period.

APPLICABILITY : At all times.

ACTION :

a. With radioactive liquid waste being discharged without treatment and in excess of the above limits and any portion of the Liquid Radwaste Treatment System not in operation, prepare and submit to the Commission within 30 days, pursuant to Control 1.6.6, a Special Report that includes the following information:

   1. Explanation of why liquid radwaste was being discharged without treatment, identification of any inoperable equipment or subsystems, and the reason for the inoperability,

   2. Action(s) taken to restore the inoperable equipment to OPERABLE status, and

   3. Summary description of action(s) taken to prevent a recurrence.

b. The provisions of Administrative Control section 1.6.3 are not applicable.

SURVEILLANCE REQUIREMENTS

2.4.1 Doses due to liquid releases from each unit to UNRESTRICTED AREAS shall be projected at least once per 31 days in accordance with the methodology and parameters in the ODCM when Liquid Radwaste Treatment Systems are not being fully utilized.

2.4.2 The installed Liquid Radwaste Treatment System shall be considered OPERABLE by meeting Controls 2.2 and 2.3.

2.0 RADIOACTIVE LIQUID EFFLUENTS

CONTROL 2.4 : LIQUID RADWASTE TREATMENT SYSTEM, (continued)

METHOD 2.4 : Projected Dose

Control 2.4 requires that the Liquid Radwaste Treatment System be operable and appropriate subsystems of the liquid radwaste treatment system shall be used to reduce the radioactive materials in liquid waste prior to their discharge when the projected doses from each unit to unrestricted areas due to liquid effluents, when averaged over a 31 day period, would exceed 0.06 mrem to the total body or 0.2 mrem to any organ.

Surveillance 2.4.1 requires the doses, to unrestricted areas, due to radioactive material released in liquid effluent to be projected at least once per 31 days unless the liquid radwaste treatment system is being fully utilized.

The monthly dose is normally projected by computing the doses to the total body and most exposed organ accumulated during the most recent month and assuming the result represents the projected doses for the current month. The dose during the preceding month will be computed as described in Method 2.3.

Alternately, this requirement may be satisfied by extrapolating the dose to date during the current month to include the entire month. The dose to date is calculated as described in Method 2.3

The dose is projected with the relation:

$$P = \frac{31 \bullet D}{X} \qquad \text{Eqn 2.4-1}$$

where:

P = the projected total body or organ dose during the month, (mrem).

31 = number of days in a calendar month, (days)

X = number of days in current month to date represented by available radioactive effluent sample, (days)

D = total body or organ dose to date during current month calculated according to Method 2.3, (mrem)

2.0 RADIOACTIVE LIQUID EFFLUENTS

CONTROL 2.4 : LIQUID RADWASTE TREATMENT SYSTEM, (continued)

BASIS 2.4: LIQUID RADWASTE TREATMENT SYSTEM

This control applies to the release of radioactive materials in liquid effluents from each unit at the site. For units with shared Radwaste Systems, the liquid effluents from the shared system are to be proportioned among the units sharing that system.

The OPERABILITY of the Liquid Radwaste Treatment System ensures that this system will be available for use whenever liquid effluents require treatment prior to release to the environment. The requirement that the appropriate portions of this system be used when specified provides assurance that the releases of radioactive materials in liquid effluents will be kept "as low as is reasonably achievable." This specification implements the requirements of 10 CFR 50.36a, General Design Criterion 60 of Appendix A to 10 CFR Part 50 and the objectives given in Section II.D of Appendix I to 10 CFR Part 50. The specified limits governing the use of appropriate portions of the Liquid Radwaste Treatment System were specified as a suitable fraction of the dose design objectives set forth in Appendix I, 10 CFR Part 50 for liquid effluents.

2.0 RADIOACTIVE LIQUID EFFLUENTS

CONTROL 2.4 : LIQUID RADWASTE TREATMENT SYSTEM, (continued)

Example Calculation: Determination of the Projected Dose

The dose, to unrestricted areas, from liquid effluent must be projected at least once per 31 days when the liquid radwaste treatment system is not being fully utilized. The dose projection can be made using the equation:

$$P = \frac{31 \bullet D}{X}$$

where:

P	=	the projected total body or organ dose during the month (mrem)
31	=	number of days in a calendar month, (days)
X	=	number of days in current month to date represented by available radioactive effluent sample, (days)
D	=	total body or organ dose to date during current month calculated according to section 2.4, (mrem).

Example:

The whole body dose calculated as of March 15 was 7.5×10^{-2} mrem. The projected dose for the 31 day period in March would be:

$$P = \frac{31 \times D}{15} = \frac{31 \times 7.5 \times 10^{-2} \text{ mrem}}{15} = 1.55 \times 10^{-1} \text{ mrem}$$

Thus, in accordance with Control 2.4, appropriate portions of the liquid radwaste treatment system must be used to reduce releases of radioactivity since the dose from each unit would exceed 0.06 mrem.

APPENDIX 2A

RADIOACTIVE LIQUID EFFLUENTS

PATHWAY DOSE TRANSFER FACTORS

2.0 RADIOACTIVE LIQUID EFFLUENTS

APPENDIX 2A

RADIOACTIVE LIQUID EFFLUENTS

PATHWAY DOSE TRANSFER FACTORS

The following page lists the Shoreline Dose Transfer Factors used for the calculation of doses for demonstrating compliance with Controls 2.3 and 2.4.

The exposure pathway of concern is Whole Body Dose from Shoreline Deposits. The Drinking Water, Fish, and Shellfish pathways do not exist. The water is saline, non potable. Access to the canals is restricted to authorized personnel; fishing and collection of canal borne items is prohibited, except for collection of material in support of environmental monitoring activities. The skin dose factors, listed in table E-6 of RG 1.109[1], are, at worst, 50 % greater than the external dose factors; the dose limits to the skin ("any organ", Control 2.3) are at least 3 times greater; therefore, the external pathway is 'most limiting'.

The Shoreline Dose Transfer Factors were calculated in accordance with the methodology described in Appendix A.2.c of RG 1.109, with the appropriate dimensional conversions to incorporate Curies, gallons, etc.

The dimensions of the following factors are mrem in a year per curie released in an effluent release rate of 1 gallon per minute.

1. Regulatory Guide 1.109, Revision 1, October 1977; "Calculation of annual doses to man from routine releases of reactor effluents for the purpose of evaluating compliance with 10 CFR 50, Appendix I".

2.0 RADIOACTIVE LIQUID EFFLUENTS

DOSE FACTORS FOR LIQUID DISCHARGES BASED ON 1 CI/YR RELEASE OF EACH ISOTOPE IN DISCHARGE FLOW OF 1 GPM WITH NO ADDITIONAL DILUTION

PATHWAY - DISCHARGE CANAL SHORLINE DEPOSITS				AGE GROUP - ADULT				
				ORGAN DOSE (MREM)				
NUCLIDE	BONE	LIVER	THYROID	KIDNEY	LUNG	GI-LLI	SKIN	TOTAL BODY
H-3	0.	0.	0.	0.	0.	0.	0.	0.
CR-51	3.69-01	3.69E-01	3.69E-01	3.69E-01	3.69E-01	3.69E-01	4.36E-01	3.69E-01
MN-54	1.09E+02	1.09E+02	1.09E+02	1.09E+02	1.09E+02	1.09E+02	1.28+02	1.09E+02
FE-55	0.	0.	0	0.	0.	0.	0.	0.
FE-59	2.17E+01	2.17E+01	2.17E+01	2.17E+01	2.17E+01	2.17E+01	2.55E+01	2.17E+01
CO-58	3.00E+01	3.00E+01	3.00E+01	3.00E+01	3.00E+01	3.00E+01	3.51E+01	3.00E+01
CO-60	1.69E+03	1.69E+03	1.69E+03	1.69E+03	1.69E+03	1.69E+03	1.99E+03	1.69E+03
ZN-65	5.86E+01	5.86E+01	5.86E+01	5.86E+01	5.86E+01	5.86E+01	6.74E+01	5.86E+01
RB-88	7.11E-01	7.11E-01	7.11E-01	7.11E-01	7.11E-01	7.11E-01	8.12E-01	7.11E-01
SR-89	1.71E-03	1.71E-03	1.71E-03	1.71E-03	1.71E-03	1.71E-03	1.98E-03	1.71E-03
SR-90	4.23E-01	4.23E-01	4.23E-01	4.23E-01	4.23E-01	4.23E-01	4.99E-01	4.23E-01
Y-91	8.54E-02	8.54E-02	8.54E-02	8.54E-02	8.54E-02	8.54E-02	9.61E-02	8.54E-02
ZR-95	3.96E+01	3.96E+01	3.96E+01	3.96E+01	3.96E+01	3.96E+01	4.62E+01	3.96E+01
ZR-97	4.32E-01	4.32E-01	4.32E-01	4.32E-01	4.32E-01	4.32E-01	5.04E-01	4.32E-01
NB-95	1.08E+01	1.08E+01	1.08E+01	1.08E+01	1.08E+01	1.08E+01	1.27E+01	1.08E+01
MO-99	4.66E-01	4.66E-01	4.66E-01	4.66E-01	4.66E-01	4.66E-01	5.37E-01	4.66E-01
RU-103	8.69E+00	8.69E+00	8.69E+00	8.69E+00	8.69E+00	8.69E+00	1.01E+01	8.69E+00
RU-106	3.30E+01	3.30E+01	3.30E+01	3.30E+01	3.30E+01	3.30E+01	3.97E+01	3.30E+01
AG-11OM	2.82E+02	2.82E+02	2.82E+02	2.82E+02	2.82E+02	2.82E+02	3.29E+02	2.82E+02
SB-124	4.72E+01	4.72E+01	4.72E+01	4.72E+01	4.72E+01	4.72E+01	5.45E+01	4.72E+01
SB-125	1.81E+02	1.81E+02	1.81E+02	1.81E+02	1.81E+02	1.81E+02	2.05E+02	1.81E+02
TE-125M	1.22E-01	1.22E-01	1.22E-01	1.22E-01	1.22E-01	1.22E-01	1.68E-01	1.22E-01
TE-127M	6.94E-02	6.94E-02	6.94E-02	6.94E-02	6.94E-02	6.94E-02	7.68E-02	6.94E-02
TE-129M	3.04E+00	3.04E+00	3.04E+00	3.04E+00	3.04E+00	3.04E+00	3.57E+00	3.04E+00
TE-131M	8.41E-01	8.41E-01	8.41E-01	8.41E-01	8.41E-01	8.41E-01	3.68E+01	8.41E-01
TE-132	3.66E+00	3.66E+00	3.66E+00	3.66E+00	3.66E+00	3.66E+00	4.31E+00	3.66E+00
I-131	1.36E+00	1.36E+00	1.36E+00	1.36E+00	1.36E+00	1.36E+00	1.65E+00	1.36E+00
I-133	1.95E-01	1.95E-01	1.95E-01	1.95E-01	1.95E-01	1.95E-01	2.38E-01	1.95E-01
CS-134	5.51E+02	5.51E+02	5.51E+02	5.51E+02	5.51E+02	5.51E+02	6.43E+02	5.51E+02
CS-136	1.18E+01	1.18E+01	1.18E+01	1.18E+01	1.18E+01	1.18E+01	1.33E+01	1.18E+01
CS-137	8.13E+02	8.13E+02	8.13E+02	8.13E+02	8.13E+02	8.13E+02	9.48E+02	8.13E+02
BA-140	1.32E+01	1.32E+01	1.32E+01	1.32E+01	1.32E+01	1.32E+01	1.50E+01	1.32E+01
LA-140	1.52E+00	1.52E+00	1.52E+00	1.52E+00	1.52E+00	1.52E+00	1.72E+00	1.52E+00
CE-141	1.08E+00	1.08E+00	1.08E+00	1.08E+00	1.08E+00	1.08E+00	1.22E+00	1.08E+00
CE-143	1.82E-01	1.82E-01	1.82E-01	1.82E-01	1.82E-01	1.82E-01	2.07E-01	1.82E-01
CE-144	8.94E+00	8.94E+00	8.94E+00	8.94E+00	8.94E+00	8.94E+00	1.03E+01	8.94E+00
NP-239	1.35E-01	1.35E-01	1.35E-01	1.35E-01	1.35E-01	1.35E-01	1.56E-01	1.35E-01

2.0 RADIOACTIVE LIQUID EFFLUENTS

PATHWAY - DISCHARGE CANAL SHORELINE DEPOSITS				AGE GROUP - TEENAGER				
				ORGAN DOSE (MREM)				
NUCLIDE	BONE	LIVER	THYROID	KIDNEY	LUNG	GI-LLI	SKIN	TOTAL BODY
H-3	0.	0.	0.	0.	0.	0.	0.	0.
CR-51	2.06E+00	2.06E+00	2.06E+00	2.06E+00	2.06E+00	2.06E+00	2.43E+00	2.06E+00
MN-54	6.09E+02	6.09E+02	6.09E+02	6.09E+02	6.09E+02	6.09E+02	7.15E+02	6.09E+02
FE-55	0.	0.	0.	0.	0.	0.	0.	0.
FE-59	1.21E+02	1.21E+02	1.21E+02	1.21E+02	1.21E+02	1.21E+02	1.42E+02	1.21E+02
CO-58	1.67E+02	1.67E+02	1.67E+02	1.67E+02	1.67E+02	1.67E+02	1.96E+02	1.67E+02
CO-60	9.45E+03	9.45E+03	9.45E+03	9.45E+03	9.45E+03	9.45E+03	1.11E+04	9.45E+03
ZN-65	3.27E+02	3.27E+02	3.27E+02	3.27E+02	3.27E+02	3.27E+02	3.76E+02	3.27E+02
RB-88	3.97E+00	3.97E+00	3.97E+00	3.97E+00	3.97E+00	3.97E+00	4.53E+00	3.97E+00
SR-89	9.54E-03	9.54E-03	9.54E-03	9.54E-03	9.54E-03	9.54E-03	1.11E-02	9.54E-03
SR-90	2.36E+00	2.36E+00	2.36E+00	2.36E+00	2.36E+00	2.36E+00	2.79E+00	2.36E+00
Y-91	4.77E-01	4.77E-01	4.77E-01	4.77E-01	4.77E-01	4.77E-01	5.35E-01	4.77E-01
ZR-95	2.21E+02	2.21E+02	2.21E+02	2.21E+02	2.21E+02	2.21E+02	2.58E+02	2.21E+02
ZR-97	2.41E+00	2.41E+00	2.41E+00	2.41E+00	2.41E+00	2.41E+00	2.82E+00	2.41E+00
NB-95	6.01E+01	6.01E+01	6.01E+01	6.01E+01	6.01E+01	6.01E+01	7.07E+01	6.01E+01
MO-99	2.60E+00	2.60E+00	2.60E+00	2.60E+00	2.60E+00	2.60E+00	3.00E+00	2.60E+00
RU-103	4.85E+01	4.85E+01	4.85E+01	4.85E+01	4.85E+01	4.85E+01	5.66E+01	4.85E+01
RU-106	1.85E+02	1.85E+02	1.85E+02	1.85E+02	1.85E+02	1.85E+02	2.21E+02	1.85E+02
AG-110M	1.58E+03	1.58E+03	1.58E+03	1.58E+03	1.58E+03	1.58E+03	1.84E+03	1.58E+03
SB-124	2.64E+02	2.64E+02	2.64E+02	2.64E+02	2.64E+02	2.64E+02	3.04E+02	2.64E+02
SB-125	1.01E+03	1.01E+03	1.01E+03	1.01E+03	1.01E+03	1.01E+03	1.14E+03	1.01E+03
TE-125M	6.84E-01	6.84E-01	6.84E-01	6.84E-01	6.84E-01	6.84E-01	9.38E-01	6.84E-01
TE-127M	3.87E-01	3.87E-01	3.87E-01	3.87E-01	3.87E-01	3.87E-01	4.29E-01	3.87E-01
TE-129M	1.70E+01	1.70E+01	1.70E+01	1.70E+01	1.70E+01	1.70E+01	1.99E+01	1.70E+01
TE-131M	4.69E+00	4.69E+00	4.69E+00	4.69E+00	4.69E+00	4.69E+00	2.05E+02	4.69E+00
TE-132	2.05E+01	2.05E+01	2.05E+01	2.05E+01	2.05E+01	2.05E+01	2.41E+01	2.05E+01
I-131	7.59E+00	7.59E+00	7.59E+00	7.59E+00	7.59E+00	7.59E+00	9.22E+00	7.59E+00
I-133	1.09E+00	1.09E+00	1.09E+00	1.09E+00	1.09E+00	1.09E+00	1.33E+00	1.09E+00
CS-134	3.08E+03	3.08E+03	3.08E+03	3.08E+03	3.08E+03	3.08E+03	3.59E+03	3.08E+03
CS-136	6.57E+01	6.57E+01	6.57E+01	6.57E+01	6.57E+01	6.57E+01	7.44E+01	6.57E+01
CS-137	4.54E+03	4.54E+03	4.54E+03	4.54E+03	4.54E+03	4.54E+03	5.29E+03	4.54E+03
BA-140	7.38E+01	7.38E+01	7.38E+01	7.38E+01	7.38E+01	7.38E+01	8.36E+01	7.38E+01
LA-140	8.46E+00	8.46E+00	8.46E+00	8.46E+00	8.46E+00	8.46E+00	9.59E+00	8.46E+00
CE-141	6.02E+00	6.02E+00	6.02E+00	6.02E+00	6.02E+00	6.02E+00	6.79E+00	6.02E+00
CE-143	1.02E+00	1.02E+00	1.02E+00	1.02E+00	1.02E+00	1.02E+00	1.16E+00	1.02E+00
CE-144	4.99E+01	4.99E+01	4.99E+01	4.99E+01	4.99E+01	4.99E+01	5.76E+01	4.99E+01
NP-239	7.52E-01	7.52E-01	7.52E-01	7.52E-01	7.52E-01	7.52E-01	8.71E-01	7.52E-01

2.0 RADIOACTIVE LIQUID EFFLUENTS

PATHWAY - DISCHARGE CANAL SHORELINE DEPOSITS				AGE GROUP - CHILD				
				ORGAN DOSE (MREM)				
NUCLIDE	BONE	LIVER	THYROID	KIDNEY	LUNG	GI-LLI	SKIN	TOTAL BODY
H-3	0.	0.	0.	0.	0.	0.	0.	0.
CR-51	4.30E-01	4.30E-01	4.30E-01	4.30E-01	4.30E-01	4.30E-01	5.09E-01	4.30E-01
MN-54	1.27E+02	1.27E+02	1.27E+02	1.27E+02	1.27E+02	1.27E+02	1.49E+02	1.27E+02
FE-55	0.	0.	0.	0.	0.	0.	0.	0.
FE-59	2.53E+01	2.53E+01	2.53E+01	2.53E+01	2.53E+01	2.53E+01	2.98E+01	2.53E+01
CO-58	3.50E+01	3.50E+01	3.50E+01	3.50E+01	3.50E+01	3.50E+01	4.10E+01	3.50E+01
CO-60	1.97E+03	1.97E+03	1.97E+03	1.97E+03	1.97E+03	1.97E+03	2.32E+03	1.97E+03
ZN-65	6.84E+01	6.84E+01	6.84E+01	6.84E+01	6.84E+01	6.84E+01	7.87E+01	6.84E+01
RB-88	8.29E-01	8.29E-01	8.29E-01	8.29E-01	8.29E-01	8.29E-01	9.47E-01	8.29E-01
SR-89	1.99E-03	1.99E-03	1.99E-03	1.99E-03	1.99E-03	1.99E-03	2.31E-03	1.99E-03
SR-90	4.93E-01	4.93E-01	4.93E-01	4.93E-01	4.93E-01	4.93E-01	5.83E-01	4.93E-01
Y-91	9.96E-02	9.96E-02	9.96E-02	9.96E-02	9.96E-02	9.96E-02	1.12E-01	9.96E-02
ZR-95	4.62E+01	4.62E+01	4.62E+01	4.62E+01	4.62E+01	4.62E+01	5.39E+01	4.62E+01
ZR-97	5.03E-01	5.03E-01	5.03E-01	5.03E-01	5.03E-01	5.03E-01	5.88E-01	5.03E-01
NB-95	1.26E+01	1.26E+01	1.26E+01	1.26E+01	1.26E+01	1.26E+01	1.48E+01	1.26E+01
MO-99	5.43E-01	5.43E-01	5.43E-01	5.43E-01	5.43E-01	5.43E-01	6.27E-01	5.43E-01
RU-103	1.01E+01	1.01E+01	1.01E+01	1.01E+01	1.01E+01	1.01E+01	1.18E+01	1.01E+01
RU-106	3.86E+01	3.86E+01	3.86E+01	3.86E+01	3.86E+01	3.86E+01	4.83E+01	3.86E+01
AG-110M	3.29E+02	3.29E+02	3.29E+02	3.29E+02	3.29E+02	3.29E+02	3.84E+02	3.29E+02
SB-124	5.51E+01	5.51E+01	5.51E+01	5.51E+01	5.51E+01	5.51E+01	6.35E+01	5.51E+01
SB-125	2.11E+02	2.11E+02	2.11E+02	2.11E+02	2.11E+02	2.11E+02	2.39E+02	2.11E+02
TE-125M	1.43E-01	1.43E-01	1.43E-01	1.43E-01	1.43E-01	1.43E-01	1.98E-01	1.43E-01
TE-127M	8.09E-02	8.09E-02	8.09E-02	8.09E-02	8.09E-02	8.09E-02	8.97E-02	8.09E-02
TE-129M	3.54E+00	3.54E+00	3.54E+00	3.54E+00	3.54E+00	3.54E+00	4.18E+00	3.54E+00
TE-131M	9.80E-01	9.80E-01	9.80E-01	9.80E-01	9.80E-01	9.80E-01	4.28E+01	9.80E-01
TE-132	4.28E+00	4.28E+00	4.28E+00	4.28E+00	4.28E+00	4.28E+00	5.03E+00	4.28E+00
I-131	1.59E+00	1.59E+00	1.59E+00	1.59E+00	1.59E+00	1.59E+00	1.93E+00	1.59E+00
I-133	2.28E-01	2.28E-01	2.28E-01	2.28E-01	2.28E-01	2.28E-01	2.77E-01	2.28E-01
CS-134	6.43E+02	6.43E+02	6.43E+02	6.43E+02	6.43E+02	6.43E+02	7.50E+02	6.43E+02
CS-136	1.37E+01	1.37E+01	1.37E+01	1.37E+01	1.37E+01	1.37E+01	1.58E+01	1.37E+01
CS-137	9.48E+02	9.48E+02	9.48E+02	9.48E+02	9.48E+02	9.48E+02	1.11E+03	9.48E+02
BA-140	1.54E+01	1.54E+01	1.54E+01	1.54E+01	1.54E+01	1.54E+01	1.75E+01	1.54E+01
LA-140	1.77E+00	1.77E+00	1.77E+00	1.77E+00	1.77E+00	1.77E+00	2.00E+00	1.77E+00
CE-141	1.26E+00	1.26E+00	1.26E+00	1.26E+00	1.26E+00	1.26E+00	1.42E+00	1.28E+00
CE-143	2.13E-01	2.13E-01	2.13E-01	2.13E-01	2.13E-01	2.13E-01	2.42E-01	2.13E-01
CE-144	1.04E+01	1.04E+01	1.04E+01	1.04E+01	1.04E+01	1.04E+01	1.20E+01	1.04E+01
NP-239	1.57E-01	1.57E-01	1.57E-01	1.57E-01	1.57E-01	1.57E-01	1.82E-01	1.57E-01

SECTION 3

RADIOACTIVE GASEOUS EFFLUENTS

3.0 RADIOACTIVE GASEOUS EFFLUENTS

OBJECTIVES & SYSTEM DESCRIPTION

A. OBJECTIVES

To provide calculational methodology needed to assure compliance with 10CFR20 and 10CFR 50, which requires the following determinations and surveillances :

- o Radionuclide concentrations in gaseous effluents
- o The dose rate due to radioactive gaseous effluents to areas at and beyond the site boundary are maintained within the limits of Control 3.2
  - Total body dose rate from radioactive noble gases
  - Skin dose rate from radioactive noble gases
  - Organ dose rate from radioiodines, tritium, and particulates with half-lives greater than 8 days.
- o Determine that the cumulative quarterly and annual doses per reactor at and beyond the site boundary, due to noble gases, are maintained below the limits of Control 3.3 at least once per 31 days.
- o Determine that the cumulative quarterly and annual doses per reactor at and beyond the site boundary from radioiodines, tritium, and particulates with half-lives greater than 8 days, are maintained below the limits of Control 3.4 at least once per 31 days.
- o Project the doses due to gaseous releases from each unit at least once per 31 days when gaseous radwaste treatment systems are not being fully utilized.

B. BASES

Radioactive gaseous effluents from Turkey Point Units 3 and 4 are released through four monitored release points; a common plant vent via a stack above the containment building (~200 ft.), the Unit 3 spent fuel pit vent (~110 ft.), and the condenser air ejector vents (~51 ft.) from each unit. Unmonitored radioactive airborne releases can also occur from the secondary steam systems of each unit if primary to secondary leakage is occurring. Accounting for the quantity of these unmonitored airborne releases, during periods of primary to secondary leakage, are performed using approved plant procedures and the most accurate means available. The effluent sources (refer to Figure 3-1) for each release point are tabulated in Table 3-1. The airborne releases from all these sources are treated as a mixed mode release from a single location for dose calculational purposes. They are considered a release from a single location due to their close proximity to one another relative to the distance to the site boundary.

3.0 RADIOACTIVE GASEOUS EFFLUENTS

OBJECTIVES & SYSTEM DESCRIPTION (continued)

B. BASIS, (continued)

A mixed mode release is selected since the majority of the releases made from the site fit the mixed mode release model as described in Regulatory Guide 1.111.

Compliance for beta and gamma dose limits at and beyond the site boundary for noble gas effluents is determined by assessing the dose rate and/or dose at the location where the minimum atmospheric dispersion occurs at the site boundary since the atmospheric dispersion will be higher at all other points off-site. This minimum dispersion occurs at the site boundary 1950 meters SSE of the plant where the dispersion factor is 5.8×10^{-7} sec/m^3 (see figure 3-2). This value was extrapolated from the tables in Appendix 3A and are periodically evaluated against actual meteorological data to ensure the validity of these tables.

The dose rate due to tritium, I-131, I-133, and radioactive particulates with half lives greater than 8 days at and beyond the site boundary is assessed by determining the dose rate to a hypothetical infant's thyroid via the inhalation pathway. The basis for this approach is NUREG-0133, "Preparation of Radiological Effluent Technical Specifications for Nuclear Power Plants" which states: the dose factors are dependent on the specific organ and on the age group. The infant is the most restrictive age group for the dose rate calculations and the most restrictive organ is the thyroid via either the inhalation or grass-cow-milk pathway. The dose from tritium, I-131, I-133, and particulate is calculated by assuming a cow on pasture 4.5 miles west of the plant unless there is a milk producer in a more conservative location. At that location the reference atmospheric deposition factor, D/Q, is equal to 5×10^{-10} m^{-2} (see figure 3-2). This value was extrapolated from the tables in Appendix 3A and are periodically evaluated against actual meteorological data to ensure the validity of these tables.

Sampling and analysis is performed as outlined in ODCM Table 3.2-1. Principal gamma emitters for batch gaseous effluents, from Gas Decay Tanks or Containment Purges, which are released via the Plant Vent are Noble Gases only. The iodines and particulates are collected on filter elements in the effluent monitors and are considered continuous releases. This method of accounting for iodine and particulate in batch releases is performed to preclude over accounting for these emissions since the ventilation path is the same as for continuous releases.

3.0 RADIOACTIVE GASEOUS EFFLUENTS

C. GASEOUS RADWASTE SYSTEM

Radioactive and potentially radioactive gases from units 3 and 4 containment buildings, the auxiliary building, unit 4 spent fuel pit, and radwaste building are released via the monitored plant vent after passing through filter systems. Radioactive waste gases from the primary systems (CVCS hold-up tanks) are stored in gas decay tanks to reduce activity levels by radioactive decay prior to release via the plant vent. The unit 3 spent fuel pit area is ventilated via its' own monitored vent after passing through a filtering system. The filtration systems for the Auxiliary Building, 3 & 4 Spent Fuel Pit, and the Radwaste Building consist of a pre-filter and a HEPA filter. The Containment Buildings have roughing filters only.

The steam jet air ejectors from each unit are vented through monitored release pathways. Other steam losses concurrent with primary to secondary leakage are unmonitored and gaseous activity must be accounted for.

Radionuclides other than noble gases in the gaseous effluents are measured by the radioactive gaseous waste sampling and analysis program described in ODCM Table 3.2-1. Noble gas radionuclides are measured by continuous monitors in the four release points. The gaseous effluent streams monitoring points, and effluent discharge points are illustrated schematically in Figure 3-1.

The measured radionuclide concentrations in gaseous effluents from the plant are used for estimating offsite radionuclide concentrations and radiation doses. Sampling and analyses are performed consistent with the requirements of ODCM Table 3.2-1.

The radioactive iodines and particulate radionuclides from continuous releases and batch releases (Containment Purges and Gas Decay Tanks are released via the Plant Vent) are determined by charcoal and filter samples removed weekly from continuous sample trains installed at each release point (plant vent, condenser air ejectors and Unit 3 Spent Fuel Pit vent). Tritium activity is determined on monthly grab samples from the plant vent, condenser air ejector, and Unit 3 Spent Fuel Pit and by a grab sample from each containment purge.

The Condenser Air Ejector Exhaust pathway is not conducive to collection of iodine and particulate in that the pathway is not capable of isokinetic sampling. The exhaust flow rate varies, doesn't have an isokinetic nozzle and when condenser air in leakage is at very low flow rates emits puffs versus a constant flow rate. Therefore the Steam Jet Air Ejector SPING will be sampling a mixture of Condenser off gas and the atmosphere, and not gathering a representative sample. To account for the inability to perform isokinetic sampling, compensation factors were developed to relate the estimated concentration of particulates and iodine to the concentration of noble gas emitted. Calculation dose, from this pathway, from particulates is performed assuming that all curies released are Co-60 and all iodine curies released is I-131. No analysis for alpha or Sr-89 and Sr-90 will be performed. The compensation factors were developed using PTN-ENG-SENS-06-048, The Calculation Developing the Iodine and Particulate Activity Compensation Factors for the Steam Jet Air Ejector Vent Monitor.

3.0 RADIOACTIVE GASEOUS EFFLUENTS

OBJECTIVES & SYSTEM DESCRIPTION (continued)

C. GASEOUS RADWASTE SYSTEM, (continued)

Additional grab samples are obtained and analyzed if the conditions identified in Notes 4,5,6 and 7 of ODCM Table 3.2-1 exist, i.e., tritium grab samples once per 24 hours when the refueling canal is flooded, tritium grab samples at least weekly from the spent fuel pool ventilation exhaust when spent fuel is in the spent fuel pool, and sampling shall also be performed at least once per day for at least 7 days following each shutdown, startup or THERMAL POWER change exceeding 15% of RATED THERMAL POWER in one (1) hour and analyses shall be completed within 48 hours of changing if both the following conditions are met:

(1) analysis shows that the DOSE EQUIVALENT I-131 concentration in the primary coolant has increased by more than a factor of 3;

AND

(2) the noble gas activity monitor shows that the effluent activity has increased by more than a factor of 3.

Activities measured by these additional samples should be included in the cumulative dose calculations.

Noble gas activity released is measured by continuous noble gas monitors installed in each discharge point for release types listed in ODCM Table 3.2-1. The quantity of radioactive noble gas activity not accounted for by grab samples can be determined by integrating the release rate measurement from each effluent noble gas monitor.

3.0 RADIOACTIVE GASEOUS EFFLUENTS

OBJECTIVES & SYSTEM DESCRIPTION (continued)

C. GASEOUS RADWASTE SYSTEM, (continued)

The total measured radioactivity discharged via a stack or vent during a specific time period can be determined from the effluent monitors by :

$$Q_j = \frac{N_j \bullet F \bullet 28317}{h}$$

where:

Q_j = total measured gaseous radioactivity release via a stack or vent during counting interval j, (μCi)

N_j = counts accumulated during counting interval j, (counts = N(cpm) x t (min))

F = discharge rate of gaseous effluent stream, (ft^3/min)

28317 = conversion constant, (cm^3/ft^3)

h = effluent noble gas monitor calibration or counting rate response for noble gas gamma radiation, $\frac{cpm}{\mu Ci / cm^3}$

During periods of primary to secondary leakage, the activity released through unmonitored pathways can be estimated using the following methods. Other more accurate methods may be used, when appropriate and with the proper level of management approval.

$$Q_j = C \times F_j \times T_j$$

where:

C = The concentration of the individual isotope released.

F_j = The mass of unmonitored water and steam released through unmonitored pathways.

$$F_j = M_w - (M_b + M_s)$$

M_w = Mass rate of make up water

M_b = Mass rate of blowdown

M_s = Mass rate of steam from monitored sources

T_j = Time interval for the period being quantified

3.0 RADIOACTIVE GASEOUS EFFLUENTS

OBJECTIVES & SYSTEM DESCRIPTION (continued)

C. GASEOUS RADWASTE SYSTEM, (continued)

The distribution of radioactive noble gases in a gaseous effluent stream is determined by gamma spectrum analysis of gas samples from that stream. Results of previous analyses may be averaged to obtain a representative distribution. When necessary, due to an uncontrolled release, samples from similar components in the same system can be used to determine a representative distribution.

If f_i represents the fraction of radionuclide i in a given effluent stream, based on the isotopic distribution of that stream, then the quantity of radionuclide i released in a given gaseous effluent stream during counting interval j is:

$$Q_{ij} = Q_j \cdot f_i$$

where:

Q_{ij} = quantity of radionuclide i released in a given gaseous effluent stream during counting interval j, (μCi)

f_i = the fraction of radionuclide i released in a given effluent stream

In the event the radioactive noble gas distribution is not obtainable from sample(s) taken during the current period the distribution will be obtained from recent data if available.

Some gaseous effluents from both Units 3 and 4, whose sources are identified in Table 3-1, discharge in common through the plant vent. To assure that the effluents are within allowable limits per reactor, the measured release are allocated equally to both Units 3 and 4 for Gas Decay Tanks and all ventilation systems exhausting into the Plant Vent Stack. Unit 3 Spent Fuel Pit Vent, Containment purges, Steam Jet Air Ejector Vents, and Steam Generator Blowdown Vents are allocated to each unit as appropriate.

3.0 RADIOACTIVE GASEOUS EFFLUENTS

OBJECTIVES & SYSTEM DESCRIPTION (continued)

Table 3 - 1

Atmospheric Gaseous Release Points
at the Turkey Point Units 3 and 4

Effluent Source	Release Point
Gas decay tanks	Plant vent
Radwaste Building	Plant vent
Auxiliary Building	Plant vent
Containment Purge	Plant vent
No. 4 spent fuel pit	Plant vent
No. 3 spent fuel pit	Spent Fuel Pit vent
Air ejectors	Turbine deck
Steam generator blowdown	Blowdown vent

3.0 RADIOACTIVE GASEOUS EFFLUENTS

FIGURE 3 - 1

RADIOACTIVE GASEOUS WASTE

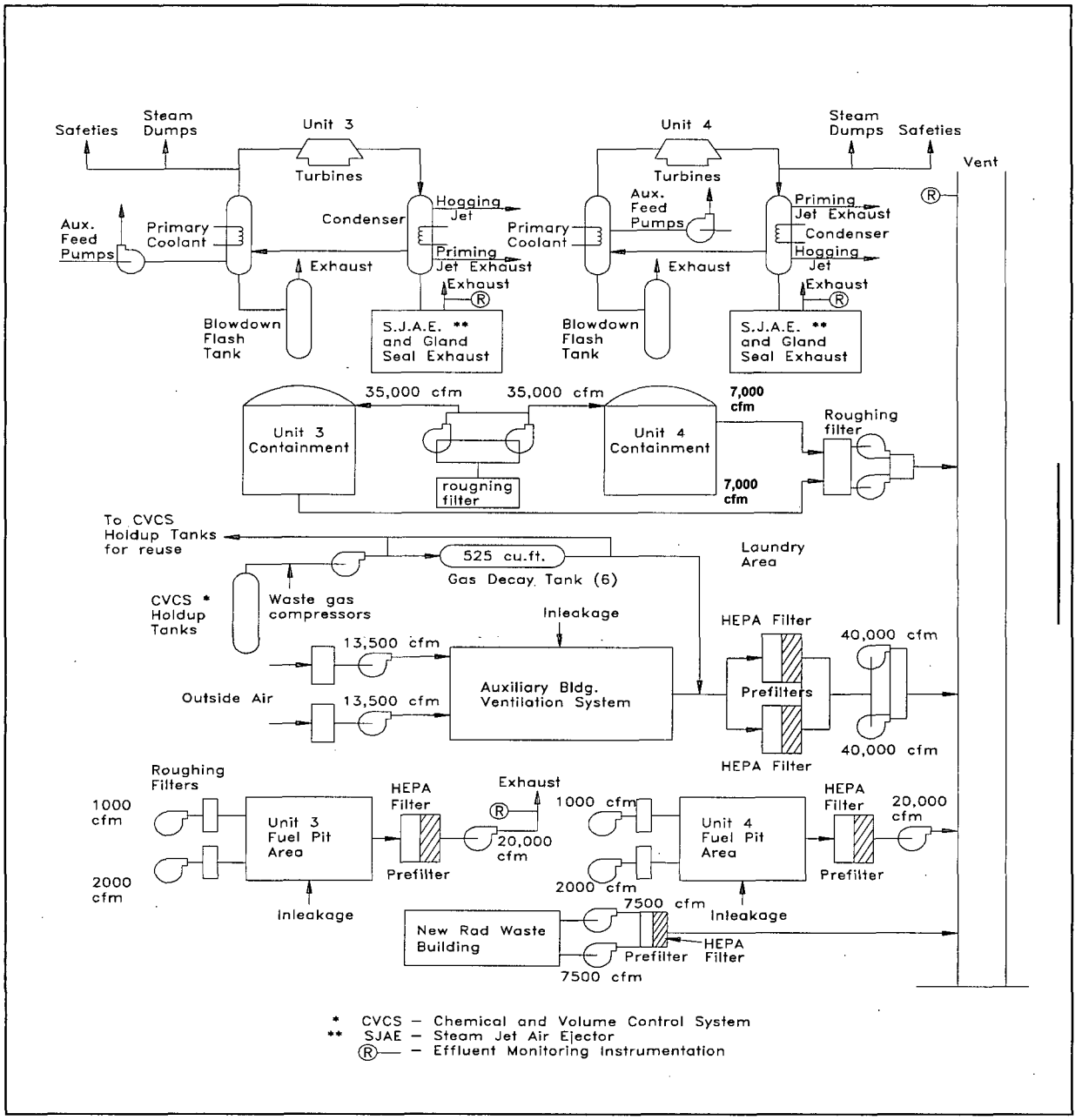

3.0 RADIOACTIVE GASEOUS EFFLUENTS

FIGURE 3-2

LOCATIONS OF AIRBORNE EFFLUENT DOSE CALCULATIONS

Locations at which doses due to airborne effluent the Turkey Point Nuclear Plant are calculated:

1. Beta and gamma doses to air, 1950 meters SSE.
2. Maximally exposed person, 5800 meters WNW.
3. Assumed beef and milk cow, 7250 meters W.

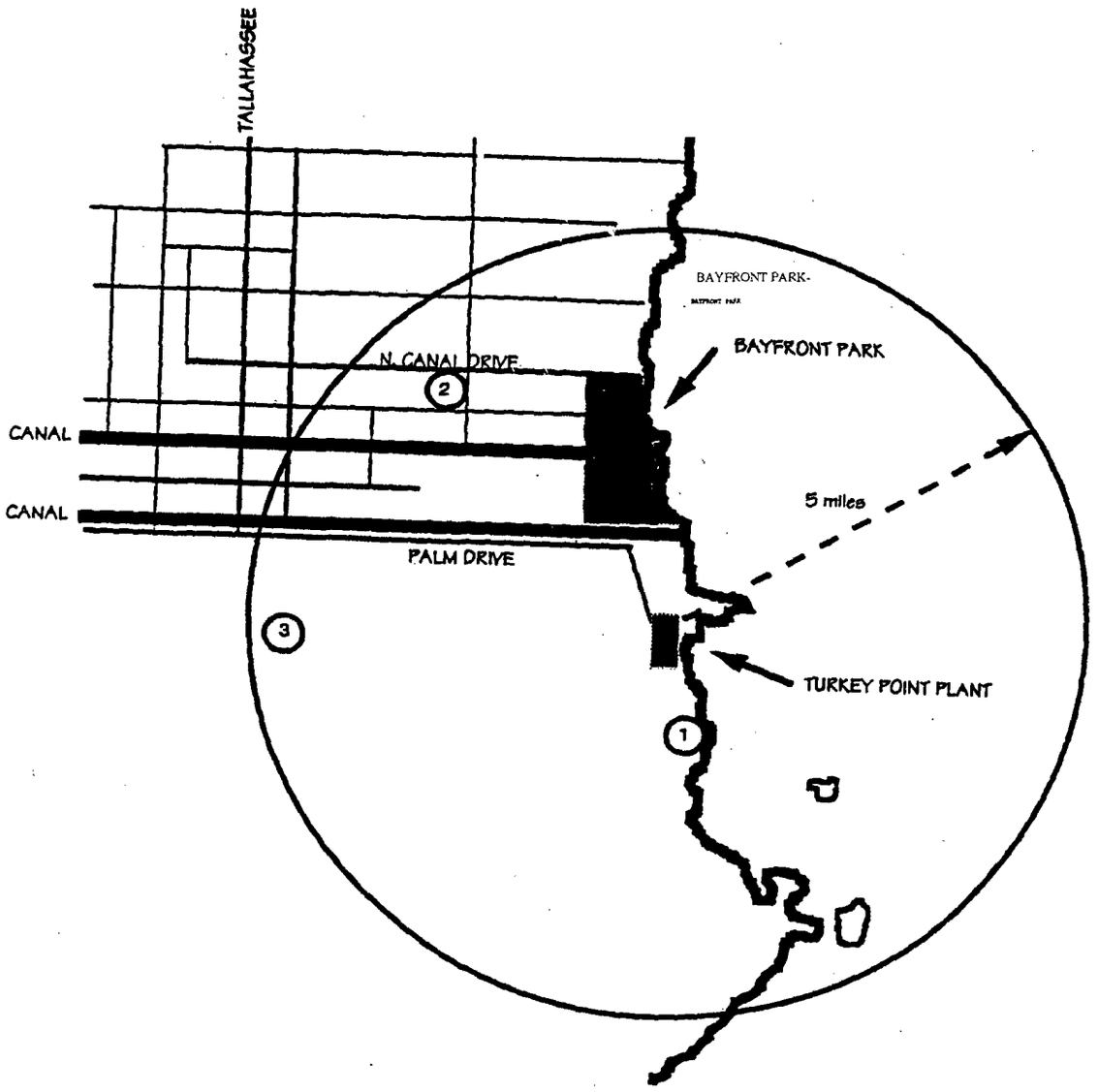

3.0 RADIOACTIVE GASEOUS EFFLUENT

CONTROL 3.1 : Radioactive Gaseous Effluent Monitoring Instrumentation; Operability and Alarm/Trip Setpoints

The radioactive gaseous effluent monitoring instrumentation channels shown in Table 3.1-1 shall be OPERABLE with their Alarm/Trip Setpoints set to ensure that the limits of Control 3.2 are not exceeded. The Alarm/Trip Setpoints of these channels meeting Control 3.2 shall be determined and adjusted in accordance with the methodology and parameters in this ODCM.

APPLICABILITY : As shown in Table 3.1-1

ACTION :

a. With a radioactive gaseous effluent monitoring instrumentation channel Alarm/Trip Setpoint less conservative than required by the above control, immediately suspend the release of radioactive gaseous effluents monitored by the affected channel, or declare the channel inoperable or change the setpoint so it is acceptably conservative.

b. With less than the minimum number of radioactive gaseous effluent monitoring instrumentation channels OPERABLE, take the ACTION shown in Table 3.1-1. Restore the inoperable instrumentation to OPERABLE status within 30 days and, if unsuccessful explain in the next Annual Radioactive Effluent Release Report pursuant to Administrative Control 1.3 why this in operability was not corrected in a timely manner.

c. The provisions of Administrative Control section 1.6.3 are not applicable.

SURVEILLANCE REQUIREMENTS

Each radioactive gaseous effluent monitoring instrumentation channel shall be demonstrated OPERABLE by performance of the CHANNEL CHECK, SOURCE CHECK, CHANNEL CALIBRATION and ANALOG CHANNEL OPERATIONAL TEST at the frequencies shown in Table 3.1-2.

3.0 RADIOACTIVE GASEOUS EFFLUENT

CONTROL 3.1 : Radioactive Gaseous Effluent Monitoring Instrumentation, Operability and Alarm/Trip Setpoints, (continued)

TABLE 3.1-1

RADIOACTIVE GASEOUS EFFLUENT MONITORING INSTRUMENTATION

INSTRUMENT	MINIMUM CHANNELS OPERABLE	APPLICABILITY	ACTION
1. GAS DECAY TANK SYSTEM			
a. Noble Gas Activity Monitor - Providing Alarm and Automatic Termination of Release (Plant Vent Monitor)	1	*	3.1.1
b. Effluent System Flow Rate Measuring Device	1	*	3.1.2
2. Condenser Air Ejector Vent System			
a. Noble Gas Activity Monitor (SPING or PRMS)	1	#	3.1.3
b. Iodine Sampler	1	##	3.1.6
c. Particulate Sampler	1	##	3.1.6
d. Effluent System Flow Rate Measuring Device		##	3.1.2
e. Sampler Flow Rate Measuring Device	1	##	3.1.5

3.0 RADIOACTIVE GASEOUS EFFLUENT

CONTROL 3.1 : Radioactive Gaseous Effluent Monitoring Instrumentation; Operability and Alarm/Trip Setpoints, (continued)

TABLE 3.1-1 (continued)
RADIOACTIVE GASEOUS EFFLUENT MONITORING INSTRUMENTATION

INSTRUMENT	MINIMUM CHANNELS OPERABLE	APPLICABILITY	ACTION
3. Plant Vent System (Include Unit 4's Spent Fuel Pool)			
a. Noble Gas Activity Monitor (SPING or PRMS)	1	*	3.1.3
b. Iodine Sampler	1	*	3.1.4
c. Particulate Sampler	1	*	3.1.4
d. Effluent System Flow Rate Measuring Device	1	*	3.1.2
e. Sampler Flow Rate Measuring Device	1	*	3.1.5
4. Unit 3 Spent Fuel Pit Building Vent			
a. Noble Gas Activity Monitor	1	*	3.1.3
b. Iodine Sampler	1	*	3.1.4
c. Particulate Sampler	1	*	3.1.4
d. Sampler Flow Rate Measuring Device	1	*	3.1.5

3.0 RADIOACTIVE GASEOUS EFFLUENT

CONTROL 3.1 : Radioactive Gaseous Effluent Monitoring Instrumentation; Operability and Alarm/Trip Setpoints, (continued)

TABLE 3.1-1 (Continued)
TABLE NOTATION

* At all times.
\# Applies during MODE 1, 2, 3 and 4.
\## Applies during MODE 1, 2, 3 and 4 when primary to secondary leakage is detected.

ACTION 3.1.1 - With the number of channels OPERABLE less than required by the Minimum Channels OPERABLE requirement, the contents of the tank(s) may be released to the environment provided that prior to initiating the release:

a. At least two independent samples of the tank's contents are analyzed, **and**

b. At least two technically qualified members of the facility staff independently verify the release rate calculations and discharge valve lineup;

Otherwise, suspend release of radioactive effluents via this pathway.

ACTION 3.1.2 - With the number of channels OPERABLE less than required by the Minimum Channels OPERABLE requirement, effluent releases via this pathway may continue provided the flow rate is estimated at least once per 4 hours.

ACTION 3.1.3 - With the number of channels OPERABLE less than required by the Minimum Channels OPERABLE requirement, effluent releases via this pathway may continue provided grab samples are taken at least once per 12 hours and these samples are analyzed for radioactivity within 24 hours.

ACTION 3.1.4 With the number of channels OPERABLE less than required by the Minimum Channels OPERABLE requirement, effluent releases via the affected pathway may continue provided continuous sample collection with auxiliary equipment as required by Table 3.2-1 is installed within 4 hours of the channel being declared inoperable, and analyzed at least weekly.

3.0 RADIOACTIVE GASEOUS EFFLUENT

ACTION 3.1.5 With the number of channels OPERABLE less than required by the Minimum Channels OPERABLE requirement, effluent releases via the affected pathway may continue provided auxiliary equipment is installed, AND the sample flow rate is verified at least once per 4 hours.

ACTION 3.1.6 Continuous collection of iodine and particulate in the Condenser Air Ejector is not required. If Primary to Secondary leakage is detected, effluent releases via the affected pathway may continue provided that the iodine and particulate curies released are determined using the methodology of Reference 3.

3.0 RADIOACTIVE GASEOUS EFFLUENT

CONTROL 3.1 : Radioactive Gaseous Effluent Monitoring Instrumentation; Operability and Alarm/Trip Setpoints, (continued)

TABLE 3.1-2

RADIOACTIVE GASEOUS EFFLUENT MONITORING INSTRUMENTATION SURVEILLANCE REQUIREMENTS

INSTRUMENT	CHANNEL CHECK	SOURCE CHECK	CHANNEL CALIBRATION	ANALOG CHANNEL OPERATIONAL TEST	MODES FOR WHICH SURVEILLANCE IS REQUIRED
1. GAS DECAY TANK SYSTEM					
a. Noble Gas Activity Monitor Providing Alarm and Automatic Termination of Release (Plant Vent Monitor)	P	P	R (3)	Q (1)	*
b. Effluent System Flow Rate Measuring Device	P (4)	N.A.	R	N.A.	*
2. Condenser Air Ejector Vent System					
a. Noble Gas Activity Monitor (SPING or PRMS)	D	M	R (3)	Q (2)	#
b. Effluent System Flow Rate Measuring Device	D (4)	N.A.	R	N.A.	##
c. Sample Flow Rate Measuring Device	D (4)	N.A.	R	N.A.	##

3.0 RADIOACTIVE GASEOUS EFFLUENT

CONTROL 3.1 : Radioactive Gaseous Effluent Monitoring Instrumentation; Operability and Alarm/Trip Setpoints, (continued)

TABLE 3.1-2 (Continued)

RADIOACTIVE GASEOUS EFFLUENT MONITORING INSTRUMENTATION SURVEILLANCE REQUIREMENTS

INSTRUMENT	CHANNEL CHECK	SOURCE CHECK	CHANNEL CALIBRATION	ANALOG CHANNEL OPERATIONAL TEST	MODES FOR WHICH SURVEILLANCE IS REQUIRED
3. Plant Vent System (Include Unit 4's Spent Fuel Pool)					
a. Noble Gas Activity Monitor (SPING or PRMS)	D	M	R (3)	Q (2)	*
b. Iodine Sampler	W (5)	N.A.	N.A.	N.A.	*
c. Particulate Sampler	W (5)	N.A.	N.A.	N.A.	*
d. Effluent System Flow Rate Measuring Device	D (4)	N.A.	R	N.A.	*
e. Sampler Flow Rate Measuring Device	D (4)	N.A.	R	N.A.	*
4. Unit 3 Spent Fuel Pit Building Vent					
a. Noble Gas Activity Monitor	D	M	R (3)	Q (2)	*
b. Iodine Sampler	W (5)	N.A.	N.A.	N.A.	*
c. Particulate Sampler	W (5)	N.A.	N.A.	N.A.	*
d. Sampler Flow Rate Measuring Device	D (4)	N.A.	R	N.A.	*

3.0 RADIOACTIVE GASEOUS EFFLUENT

CONTROL 3.1 : Radioactive Gaseous Effluent Monitoring Instrumentation; Operability and Alarm/Trip Setpoints, (continued)

TABLE 3.1-2 (Continued)

TABLE NOTATIONS

* At all times during periods of release.
\# Applies during MODE 1, 2, 3 and 4.
\## Applies during MODE 1, 2, 3 and 4 when primary to secondary leakage is detected.

(1) The ANALOG CHANNEL OPERATIONAL TEST shall also demonstrate that automatic isolation of this pathway and control room alarm annunciation occurs if the instrument indicates measured levels above the Alarm/Trip Setpoint.

(2) The ANALOG CHANNEL OPERATIONAL TEST shall also demonstrate that if the instrument indicates measured levels above the Alarm Setpoint, alarm annunciation occurs in the control room (for PRMS only) and in the computer room (for SPING only).

(3) The initial CHANNEL CALIBRATION shall be performed using one or more of the reference standards certified by the National Institute of Standards and Technology (NIST) or using standards that have been obtained from suppliers that participate in measurement assurance activities with NIST. When practical, these standards shall permit calibrating the system over its intended range of energy and measurement range. For subsequent CHANNEL CALIBRATION, sources that have been related to the initial calibration shall be used.

(4) CHANNEL CHECK shall be made at least once per 24 hours on days on which continuous, periodic, or batch releases are made.

(5) The CHANNEL CHECK shall consist of changing and analyzing the filter on a weekly basis.

3.0 RADIOACTIVE GASEOUS EFFLUENT

CONTROL 3.1 : Radioactive Gaseous Effluent Monitoring Instrumentation; Operability and Alarm/Trip Setpoints, (continued)

METHOD 3.1.1 : GASEOUS EFFLUENT MONITOR SURVEILLANCES

The surveillances of Gross Radioactivity Monitors Providing Alarm and Automatic Termination of Release and Flow Rate Measurement Devices are scheduled by procedure 0-ADM-215, Plant Surveillance Tracking Program.

METHOD 3.1.2 : ESTABLISHING GASEOUS EFFLUENT MONITOR ALARM AND TRIP SETPOINTS

The radioactive gaseous effluent monitoring instrumentation channels alarm setpoints and trip setpoints are set in accordance with Control 3.1 to ensure the limits of Control 3.2 are not exceeded.

Each radioactive noble gas effluent monitor setpoint is derived on the basis of total body dose equivalent rate at or beyond the site boundary.

For the purpose of deriving a setpoint, the distribution of radioactive noble gases in an effluent stream may be determined in one of the following ways :

- Preferably, the radionuclide distribution is obtained by gamma spectrum analysis of identifiable noble gases in effluent gas samples. Results of analysis of one or more samples may be averaged to obtain a representative spectrum.

- Alternately, the total activity concentration of radioactive noble gases may be assumed to be Xe-133. This approach is valid because Xe-133 contributes about 99% of the noble gas activity.

3.0 RADIOACTIVE GASEOUS EFFLUENT

CONTROL 3.1 : Radioactive Gaseous Effluent Monitoring Instrumentation; Operability and Alarm/Trip Setpoints, (continued)

METHOD 3.1.2 : ESTABLISHING GASEOUS EFFLUENT MONITOR ALARM AND TRIP SETPOINTS (continued)

A noble gas effluent monitor alarm and trip setpoint, based on dose rate, is calculated with the equation below, or a method which gives a lower setpoint value in accordance with approved plant procedures.

$$S = 1.06 \left[\frac{h \bullet S_f}{F \bullet \chi / Q}\right] \left[\frac{\sum_i C_i}{\sum_i (C_i \bullet DF_i)}\right] + Bkg \qquad \text{Eqn 3.1-1}$$

where:

S = The alarm setpoint, (cpm)

1.06 = conversion constant (500 mrem/yr·60 sec/min · 35.32 ft^3/m^3· $1m^3/10^6cm^3$)

h = monitor response to activity concentration of effluent, $\frac{cpm}{(\mu Ci/cc)}$

F = flow of gaseous effluent stream, i.e., flow past the monitor, (ft^3/min)

χ/Q = atmospheric dispersion factor at the off-site location of interest, (sec/m^3)

C_i = concentration of radionuclide i in gaseous effluent (μCi/cc).

DF_i = Dose factor for exposure to a semi-infinite cloud of noble gas, See Table 3.1-3. $\frac{mrem}{(yr \cdot \mu Ci/m^3)}$

S_f = A factor to allow for multiple sources from different or common release points. The allowable operating setpoints will be controlled administratively by assigning a fraction of the total allowable release to each of the release sources. For gas releases, this fraction is assigned as follows: 0.6 for the Plant Vent, 0.1 for the 3 Spent Fuel Pit Vent, 0.1 for each SJAE Vent, and 0.1 for unmonitored gas releases.

Bk = Instrument background count rate, cpm

3.0 RADIOACTIVE GASEOUS EFFLUENT

CONTROL 3.1 : Radioactive Gaseous Effluent Monitoring Instrumentation; Operability and Alarm/Trip Setpoints, (continued)

METHOD 3.1.2 : ESTABLISHING GASEOUS EFFLUENT MONITOR ALARM AND TRIP SETPOINTS, (continued)

Each monitoring channel has a unique response, h, which is determined by the instrument calibration.

Atmospheric dispersion depends upon the local atmospheric conditions. For the purpose of calculating a radioactive noble gas effluent monitor setpoint, the atmospheric dispersion factor, χ/Q, will be based on prevailing meteorological conditions or on reference meteorological conditions. The minimum atmospheric dispersion off site derived from reference meteorological conditions at the site boundary is 5.8×10^{-7} sec/m^3 at a location 1950 meters south southeast of the plant.

The applicable dose conversion factors, DF_i, for deriving setpoints are in Table 3.1-3.

The limiting factor for equation 3.1-1 is the total body dose rate limit of 500 mrem/year which is included in the 1.06 conversion factor. The use of the total body dose assumes that the total body dose will be the controlling dose rate and the dominant contributor to this dose will be Xe-133.

Each iodine and particulate effluent monitor setpoint may be calculated using equation 3.1-2, or a method which gives a lower setpoint value. Since the iodine and particulate channels are not required by Control 3.1, the primary method to ensure Control 3.2 is met is the performance of the sampling and analysis program in table 3.2-1 and the noble gas alarm setpoints.

3.0 RADIOACTIVE GASEOUS EFFLUENT

CONTROL 3.1 : Radioactive Gaseous Effluent Monitoring Instrumentation; Operability and Alarm/Trip Setpoints, (continued)

METHOD 3.1.2 : ESTABLISHING GASEOUS EFFLUENT MONITOR ALARM AND TRIP SETPOINTS (continued)

$$S = \frac{DR \bullet h \bullet S_f \bullet 3600 \bullet t \bullet V_R}{TA_{anip} \bullet \chi_d / Q} + BKG \qquad \text{Eqn 3.1-2}$$

where:

DR = the dose rate limit the effluent pathway is limited to; 1500 mrem/year.

Ta_{anip} = a factor relating the airborne concentration time integral of radionuclide i to the dose equivalent to organ, n, of a person in age group, a, exposed via pathway, p (inhalation), as described in Method 3.2, See Appendix 3B. $\frac{\text{mrem/yr}}{(\mu\text{Ci/m}^3)}$

3600 = conversion constant, (sec/hr).

h = monitor response to activity deposited on the sample collection media, cpm/uCi.

t = period of time over which the effluent release takes place, (hours).

χ_d/Q = atmospheric dispersion factor adjusted for depletion by deposition at the off-site location of interest (sec/m^3).

S_f = A factor to allow for multiple sources from different or common release points. The allowable operating setpoints will be controlled administratively by assigning a fraction of the total allowable release to each of the release sources. For gas releases, this fraction is assigned as follows: 0.6 for the Plant Vent, 0.1 for the 3 Spent Fuel Pit Vent, 0.1 for each SJAE Vent, and 0.1 for unmonitored gas releases.

V_R = Ratio of sample volume to release volume.

3.0 RADIOACTIVE GASEOUS EFFLUENT

CONTROL 3.1 : Radioactive Gaseous Effluent Monitoring Instrumentation; Operability and Alarm/Trip Setpoints, (continued)

METHOD 3.1.2 : ESTABLISHING GASEOUS EFFLUENT MONITOR ALARM AND TRIP SETPOINTS, (continued)

BASIS 3.1 :

The radioactive gaseous effluent instrumentation is provided to monitor and control, as applicable, the releases of radioactive materials in gaseous effluents during actual or potential releases of gaseous effluents. The Alarm/Trip Setpoints for these instruments shall be calculated and adjusted in accordance with the methodology and parameters in the ODCM to ensure that the alarm/trip will occur prior to exceeding the limits of 10 CFR Part 20. The noble gas effluent monitors Alarm/Trip setpoint is calculated using equation 3.1-1. It is shown in example calculation 3.1.2, that for continuous releases, the calculated setpoint exceeds the range of the monitor. Lower setpoints are therefore set in accordance with approved plant procedures. Typically, the Alarm setpoint for continuous releases, is set at a small fraction of the instrument's range to alert operators of an adverse trend. During continuous releases there is no process to trip; therefore, a trip setpoint is not determined for a continuous release. The sensitivity of any noble gas activity monitors used to show compliance with the gaseous effluent release requirements of Control 3.3 shall be such that concentrations as low as 1×10^{-6} μCi/ml are measurable.

This instrumentation also includes provisions for monitoring (and controlling) the concentrations of potentially explosive gas mixtures in the GAS DECAY TANK SYSTEM. The OPERABILITY and use of this instrumentation is consistent with the requirements of General Design Criteria 60, 63, and 64 of Appendix A to 10 CFR Part 50.

3.0 RADIOACTIVE GASEOUS EFFLUENT

CONTROL 3.1 : Radioactive Gaseous Effluent Monitoring Instrumentation; Operability and Alarm/Trip Setpoints, (continued)

METHOD 3.1.2 : ESTABLISHING GASEOUS EFFLUENT MONITOR ALARM AND TRIP SETPOINTS, (continued)

TABLE 3.1-3

DOSE FACTORS, DF_i, FOR EXPOSURE TO A SEMI-INFINITE CLOUD OFNOBLE GAS

Radionuclide	$\frac{mrem}{yr\ \mu Ci/m^3}$
Kr-83m	7.56 E-2
Kr-85m	1.17 E3
Kr-85	1.61 E1
Kr-87	5.92 E3
Kr-88	1.47 E4
Kr-89	1.66 E4
Kr-90	1.56 E4
Xe-131m	9.15 E1
Xe-133m	2.51 E2
Xe-133	2.94 E2
Xe-135m	3.12 E3
Xe-135	1.81 E3
Xe-137	1.42 E3
Xe-138	8.83 E3
Xe-139	5.02 E3
Ar-41	8.84 E3

Source: RG1.109 table B-1, values multiplied by 1.0×10^6 to convert pCi to uCi.

3.0 RADIOACTIVE GASEOUS EFFLUENT

CONTROL 3.1 : Radioactive Gaseous Effluent Monitoring Instrumentation; Operability and Alarm/Trip Setpoints, (continued)

METHOD 3.1.2 : ESTABLISHING GASEOUS EFFLUENT MONITOR ALARM AND TRIP SETPOINTS, (continued)

EXAMPLE CALCULATION : Determining the Noble Gas Monitor Alarm Setpoint

Control 3.1 requires release setpoints to be based on a dose rate. Derivations used to determine setpoints assume that noble gas releases occur at ground level. The noble gas effluent monitor setpoint, based on dose rate is calculated using Equation 3.1-1.

$$S = 1.06 \frac{h \bullet S_f}{F \bullet \chi / Q} \frac{\sum_i C_i}{\sum_i (C_i \bullet DF_i)} + Bkg$$

where:

S = The alarm setpoint (CPM).

1.06 = Conversion factor; $500 \frac{mrem}{yr} \cdot \frac{60\ sec}{min} \cdot 35.32 \frac{ft^3}{m^3} \cdot \frac{1m^3}{10^6 cc}$

h = Monitor response to activity concentration of effluent $\frac{cpm}{(\mu Ci/cc)}$.

F = Flow of gaseous effluent stream past the monitor $\frac{ft^3}{(min)}$.

χ/Q = atmospheric dispersion factor at the offsite location of interest, $\frac{sec}{(m^3)}$

S_f = a factor to allow for multiple sources from different or common release points. The allowable operating setpoints will be controlled by assigning a fraction of the allowable release to each of the release sources. For gas releases, this fraction is assigned as follows: 0.6 for the Plant Vent, 0.1 for the 3 Spent Fuel Pit Vent, 0.1 for each SJAE Vent, and 0.1 for unmonitored gas releases.

3.0 RADIOACTIVE GASEOUS EFFLUENT

CONTROL 3.1 : Radioactive Gaseous Effluent Monitoring Instrumentation; Operability and Alarm/Trip Setpoints, (continued)

METHOD 3.1.2 : ESTABLISHING GASEOUS EFFLUENT MONITOR ALARM AND TRIP SETPOINTS, (continued)

EXAMPLE CALCULATION : Determining the Noble Gas Monitor Alarm Setpoint, (continued)

DF_i = factor for exposure to a semi-infinite cloud of noble gas see Table 3.1-3. $\frac{mrem}{(yr\text{-}\mu Ci/m^3)}$

C_i = concentration of radionuclide, i, in gaseous effluent (μCi/cc).

Bkg = monitoring instrument background (cpm).

Example:

The measured concentration of noble gases to be discharged to the atmosphere are:

Radionuclide	C_i(μCi/cc)
Kr-85m	3.6×10^{-5}
Kr-85	2.8×10^{-4}
Kr-87	2.5×10^{-6}
Kr-88	1.4×10^{-5}
Xe-131m	1.0×10^{-2}
Xe-133	4.3×10^{-2}
Xe-135	6.0×10^{-4}
Ar-41	7.7×10^{-5}

Determine the alarm setpoint, S (cpm) when:

h = $2.5 \times 10^8 \frac{cpm}{\mu Ci/cc}$

F = $8.0 \times 10^4 \frac{ft^3}{min}$

χ/Q = $5.8 \times 10^{-7} \frac{sec}{m^3}$

S_f = 0.6

Bkg = 600 cpm

3.0 RADIOACTIVE GASEOUS EFFLUENT

METHOD 3.1.2 : ESTABLISHING GASEOUS EFFLUENT MONITOR ALARM AND TRIP SETPOINTS, (continued)

EXAMPLE CALCULATION : Determining the Noble Gas Monitor Alarm Setpoint, (continued)

Calculate the effect of a ground level release as follows:

Radionuclide	C_i	DF_i	$C_i \times DF_i$
Kr-85m	3.6×10^{-5}	1.17×10^{3}	4.2×10^{-2}
Kr-85	2.8×10^{-4}	1.61×10^{1}	4.5×10^{-3}
Kr-87	2.5×10^{-6}	5.92×10^{3}	1.5×10^{-2}
Kr-88	1.4×10^{-5}	1.47×10^{4}	2.1×10^{-1}
Xe-131m	1.0×10^{-2}	9.15×10^{1}	9.1×10^{-1}
Xe-133	4.3×10^{-2}	2.94×10^{2}	1.3×10^{1}
Xe-135	6.0×10^{-4}	1.81×10^{3}	1.1×10^{0}
Ar-41	7.7×10^{-5}	8.85×10^{3}	6.8×10^{-1}

$\Sigma C_i = 5.4 \times 10^{-2}$ $\Sigma C_i DF_i = 1.6 \times 10^{1}$

Calculate the setpoint as follows:

$$S = 1.06 \left(\frac{2.5 \times 10^{8} \bullet 0.6}{8.0 \times 10^{4} \bullet 5.8 \times 10^{-7}} \right) \left(\frac{5.4 \times 10^{-2}}{1.6 \times 10^{1}} \right) + 600$$

$$= 1.06 \, [\, 3.23 \times 10^{9} \,] \, [\, 3.4 \times 10^{-3} \,] + 600$$

$$= 11{,}565{,}794 \text{ cpm}$$

Note: The range of the installed monitor is 300,000 cpm, therefore, the alarm setpoint is set in accordance with plant procedures.

3.0 RADIOACTIVE GASEOUS EFFLUENTS

CONTROL 3.2 : DOSE RATE FROM RADIOACTIVE GASEOUS EFFLUENTS

The dose rate due to radioactive materials released in gaseous effluents from the site to areas at and beyond the SITE BOUNDARY (see Figure 1.5-1) shall be limited to the following:

a. For noble gases: Less than or equal to 500 mrem/yr to the whole body and less than or equal to 3000 mrem/yr to the skin, and

b. For Iodine-131, for Iodine-133, for tritium, and for all radionuclides in particulate form with half-lives greater than 8 days: Less than or equal to 1500 mrem/yr to any organ.

APPLICABILITY : At all times.

ACTION :

With the dose rate(s) exceeding the above limits, immediately restore the release rate to within the above limit(s).

SURVEILLANCE REQUIREMENTS

3.2.1 The dose rate due to noble gases in gaseous effluents shall be determined to be within the above limits in accordance with the methodology and parameters in this ODCM.

3.2.2 The dose rate due to Iodine 131, Iodine 133, tritium, and all radionuclides in particulate form with half-lives greater than 8 days in gaseous effluents shall be determined to be within the above limits in accordance with the methodology and parameters in this ODCM by obtaining representative samples and performing analyses in accordance with the sampling and analysis program specified in Table 3.2-1.

3.0 RADIOACTIVE GASEOUS EFFLUENTS

CONTROL 3.2 : DOSE RATE FROM RADIOACTIVE GASEOUS EFFLUENTS, (continued)

TABLE 3.2-1
RADIOACTIVE GASEOUS WASTE SAMPLING AND ANALYSIS PROGRAM

GASEOUS RELEASE TYPE	SAMPLING FREQUENCY	MINIMUM ANALYSIS FREQUENCY	TYPE OF ACTIVITY ANALYSIS	LOWER LIMIT OF DETECTION (LLD)[1], (μCi/cc)
1. Gas Decay Tank (Batch)	P Each Tank, Grab Sample	P Each Tank	Principal Gamma Emitters [2]	1×10^{-4}
2. Containment Purge or Venting (Batch)	P [6] Grab Sample	P [6] Each PURGE	Principal Gamma Emitters [2]	1×10^{-4}
			H-3	1×10^{-6}
3. Condenser Air Ejectors	M [6] Grab Sample	M [6] Gas Sample	Principal Gamma Emitters [2]	1×10^{-4}
			H-3	1×10^{-6}
4. Plant Vent (includes Unit 4 Spent Fuel Pit Building Vent)	M [6] Grab Sample	M [6] Gas Sample	Principal Gamma Emitters [2]	1×10^{-4}
	M [4],[5] Grab Sample	M	H-3	1×10^{-6}
5. Unit 3 Spent Fuel Pit Building Vent	M Grab Sample	M Gas Sample	Principal Gamma Emitters [2]	1×10^{-4}
	M [4],[5] Grab Sample	M	H-3	1×10^{-6}
6. All Release Types as listed in 3,4, and 5 (above)	Continuous [3]	W [7],[8] Charcoal Sample	I-131	1×10^{-12}
	Continuous [3]	W [7],[8] Particulate Sample	Principal Gamma Emitters [2]	1×10^{-11}
	Continuous [3]	M [8] Composite Particulate sample	Gross Alpha	1×10^{-11}
	Continuous [3]	Q [8] Composite Particulate sample	Sr-89, Sr-90	1×10^{-11}
	Continuous [3]	Noble Gas Monitor	Noble Gas Gross Beta or Gamma	1×10^{-6}

3.0 RADIOACTIVE GASEOUS EFFLUENTS

CONTROL 3.2 : DOSE RATE FROM RADIOACTIVE GASEOUS EFFLUENTS, (continued)

TABLE 3.2-1, (Continued)

TABLE NOTATIONS

(1) The LLD is the smallest concentration of radioactive material in a sample that will be detected with 95% probability with only 5% probability of falsely concluding that a blank observation represents a "real" signal.

For a particular measurement system, which may include radio chemical separation:

$$LLD = \frac{4.66\, s_b}{E \times V \times (2.22 \times 10^6) \times Y \times [\exp(-\lambda \Delta t)]}$$

Where:

LLD = The "a priori" lower limit of detection as defined above as a blank sample (microCurie per unit mass or volume),

s_b = The counting rate of a blank sample or the standard deviation of the background counting rate as appropriate (counts per minute),

E = The counting efficiency (counts per disintegration)

V = The sample size (units of mass or volume),

2.22×10^6 = The number of disintegrations per minute per microCurie,

Y = The fractional radio chemical yield, when applicable,

λ = The radioactive decay constant for the particular radionuclide, and

Δt = The elapsed time between the midpoint of sample collection and the time of counting (for plant effluents, not environmental samples)

Typical values of E, V, Y and Δt shall be used in the calculation.

It should be recognized that the LLD is defined as an a priori (before the fact) limit representing the capability of a measurement system and not as an a posteriori (after the fact) limit for a particular measurement.

3.0 RADIOACTIVE GASEOUS EFFLUENTS

CONTROL 3.2 : DOSE RATE FROM RADIOACTIVE GASEOUS EFFLUENTS, (continued)

TABLE 3.2-1 (Continued)

TABLE NOTATIONS (Continued)

(2) The principal gamma emitters for which the LLD specification will apply are exclusively the following radionuclides: Kr-87, Kr-88, Xe-133, Xe-133m, Xe-135, and Xe-138 in noble gas emissions and Mn-54, Fe-59, Co-58, Co-60, Zn-65, Mo-99, I-131, Cs-134, Cs-137, Ce-141 and Ce-144 for particulate emissions. This list does not mean that only these nuclides are to be detected and reported. Other gamma peaks that are measurable and identifiable, together with the above nuclides, shall also be identified and reported pursuant to Administrative Control 1.3.

Nuclides which are below the LLD for the analyses should not be reported as being present at the LLD for that nuclide. When a radionuclide's calculated LLD is greater than its listed LLD limit, the calculated LLD should be assigned as the activity of the radionuclide; or, the activity of the radionuclide should be calculated using measured ratios with those radionuclides which are routinely identified and measured.

(3) The ratio of the sample flow rate to the sampled stream flow rate shall be known for the time period covered by each dose or dose rate calculation made in accordance with Controls 3.2, 3.3, and 3.4.

(4) When a Unit's refueling canal is flooded, Tritium grab samples shall be taken on that Unit only from the following respective area(s) at least once per 24 hours :

For Unit 3 sample the plant vent and the Unit 3 spent fuel pool area ventilation exhaust.

For Unit 4 sample the plant vent only.

(5) When spent fuel is in the spent fuel pool, tritium grab samples shall be taken from the following respective area at least once per 7 days :

For Unit 3, sample the Unit 3 spent fuel pool area ventilation exhaust

For Unit 4, sample the plant vent.

3.0 RADIOACTIVE GASEOUS EFFLUENTS

CONTROL 3.2 : DOSE RATE FROM RADIOACTIVE GASEOUS EFFLUENTS, (continued)

TABLE 3.2-1 (Continued)

TABLE NOTATIONS (Continued)

(6) Sampling and analysis shall also be performed following shutdown, startup, or a THERMAL POWER change exceeding 15% of RATED THERMAL POWER within a 1 hour period if (1) analysis shows that the DOSE EQUIVALENT I-131 concentration in the primary coolant has increased by more than a factor of 3; and (2) the noble gas activity monitor shows that effluent activity has increased by more than a factor of 3.

(7) Sample collection media on the applicable Unit shall be changed at least once per 7 days and analyses shall be completed within 48 hours after changing, or after removal from sampler. Sample collection media on the applicable Unit shall also be changed at least once per 24 hours for at least 7 days following each shutdown, startup, or THERMAL POWER change exceeding 15% of RATED THERMAL POWER within a 1 hour period and analyses shall be completed within 48 hours of changing if: (1) analysis shows that the DOSE EQUIVALENT I-131 concentration in the primary coolant has increased more than a factor of 3; and (2) the noble gas monitor shows that effluent activity has increased more than a factor of 3. When samples collected for 24 hours are analyzed, the corresponding LLD's may be increased by a factor of 10.

(8) The condenser Air Ejectors pathway is not isokinetic and therefore monitoring of iodine and particulate is not representative. The iodine and particulate curies released are determined using the methodology of Reference 3.

3.0 RADIOACTIVE GASEOUS EFFLUENTS

METHOD 3.2 : Dose Rate Due to Gaseous Effluent

Compliance with the limits on dose rate from noble gases is demonstrated by establishing effluent monitor alarm setpoints such that an alarm will occur at or before a dose rate limit of the combined releases for noble gases is reached for the release types listed in ODCM Table 3.2-1. If an alarm occurs when the monitor setpoint is at or below the limit, compliance may be assessed by comparing the monitor record with the setpoint (limit) calculated in accordance with Method 3.1.2 or a more conservative method calculated in accordance with approved plant procedures. In the event an alarm occurs and the monitored release exceeds the setpoint limit, then compliance shall be evaluated by calculating dose rates in accordance with Methods A and B, below.

The alarm setpoints shall be derived on the basis of the radionuclide distribution from a measured gamma spectrum, or by assuming the total noble gas activity is Xe-133. If Xe-133 is the dominant radioactive gas in the airborne effluent, the gamma dose rate to a person's body is expected to be a larger fraction of the 500 mrem/year limit than is the sum of beta and gamma dose rates to the skin limit of 3000 mrem/year. Thus, a gaseous effluent monitor setpoint may be derived on the basis of whole body gamma dose rate alone such that an alarm occurs at or before the whole body dose rate off site exceeds 500 mrem/year as given in Control 3.2.

3.0 RADIOACTIVE GASEOUS EFFLUENTS

CONTROL 3.2 : DOSE RATE FROM RADIOACTIVE GASEOUS EFFLUENTS, (continued)

METHOD 3.2 : Dose Rate Due to Gaseous Effluent, (continued)

A. TOTAL BODY DOSE RATE

The total body dose rate from radioactive noble gases may be calculated at any location off-site by assuming a person is immersed in and irradiated by a semi-infinite cloud of the noble gases. The dose rate is calculated using the equation

$$\dot{D}_{TB} = \frac{X}{Q} \bullet \frac{1}{t} \sum_i Q_i \bullet P_{\gamma i} \qquad \text{Eqn 3.2-1}$$

where:

$\dot{D}_{TB}$ = Dose rate to total body from noble gases,(mrem/year)

χ/Q = atmospheric dispersion factor at the off-site location of interest, (sec/m^3)

t = Averaging time of release, i.e., increment of time during which Q_i was released, (year)

Q_i = quantity of noble gas radionuclide i released during the averaging time, (μCi)

$P_{\gamma i}$ = factor converting time integrated concentration of noble gas radionuclide, i, at ground level to total body dose, $\frac{\text{mrem - m}^3}{(\mu\text{Ci - sec})}$; see Table 3.2-2.

Since dose rate limits for airborne effluents apply everywhere off-site, compliance is assessed and alarm setpoints determined at the site boundary where the minimum atmospheric dispersion from the plant (maximum χ/Q) occurs. That location is selected on the basis of reference meteorology data in Appendix 3A-1. According to those data, the minimum dispersion off-site occurs at the site boundary 1950 meters SSE of the plant where $\chi/Q = 5.8 \times 10^{-7}$ sec/m^3.

3.0 RADIOACTIVE GASEOUS EFFLUENTS

CONTROL 3.2 : DOSE RATE FROM RADIOACTIVE GASEOUS EFFLUENTS, (continued)

METHOD 3.2 : Dose Rate Due to Gaseous Effluent, (continued)

B. Skin Dose Rate

The dose rate to skin from radioactive noble gases may be calculated at any location off-site by assuming a person is immersed in and irradiated by a semi-infinite cloud of the noble gases. The dose rate to skin is calculated using the equation :

$$\dot{D}_S = \frac{\chi}{Q} \bullet \frac{1}{t}[\sum_i Q_i \bullet S_{\beta i} + 1.11 Q_i \bullet A_{\gamma i}] \qquad \text{Eqn. 3.2-2}$$

where:

$\dot{D}_S$ = dose rate to skin from radioactive noble gases, (mrem/year)

$S_{\beta i}$ = factor converting time integrated concentration of noble gas radionuclide i at ground level, to skin dose from beta radiation, $\frac{\text{mrem}}{(\mu\text{Ci}\cdot\text{sec/m}^3)}$, see Table 3.2-2

1.11 = ratio of tissue dose equivalent to air dose in a radiation field, (mrem/mrad)

$A_{\gamma i}$ = factor for converting time integrated concentration of noble gas radionuclide, i, in a semi-infinite cloud, to air dose from its gamma radiation, $\frac{\text{mrad}}{(\mu\text{Ci}\cdot\text{sec/m}^3)}$, listed in Table 3.2-3

Since dose rate limits for airborne effluents apply everywhere off-site, compliance is assessed and alarm setpoints determined at the site boundary where the minimum atmospheric dispersion from the plant (maximum χ/Q) occurs. That location is selected on the basis of reference meteorology data in Appendix 3A-1. According to those data, the minimum dispersion off-site occurs at the site boundary 1950 meters SSE of the plant where $\chi/Q = 5.8 \times 10^{-7}$ sec/m^3.

3.0 RADIOACTIVE GASEOUS EFFLUENTS

CONTROL 3.2 : DOSE RATE FROM RADIOACTIVE GASEOUS EFFLUENTS, (continued)

METHOD 3.2 : Dose Rate Due to Gaseous Effluent, (continued)

C. H-3, I-131, I-133 and PARTICULATE DOSE RATE

The dose rate to any organ due to H-3, I-131, I-133 and radioactive material in particulate form with a half-life of more than 8 days is calculated with the equation:

$$D_{anp} = \frac{1}{3600t} \bullet \frac{\chi_d}{Q} \sum_k \sum_i Q_{ik} \bullet TA_{anip} \qquad \text{Eqn 3.2-3}$$

where:

D_{anp} = dose equivalent rate to body organ, n, of a person in age group, a, exposed via pathway, p, to radionuclide, i, identified in analysis, k, of effluent air, (mrem/year)

3600 = conversion constant, (sec/hr)

t = period of time over which the effluent releases are averaged, (hr)

χ_d/Q = atmospheric dispersion factor, adjusted for depletion by deposition(sec/m^3).(Alternately χ/Q, unadjusted, may be used).

Q_{ik} = quantity of radionuclide, i, released during time increment, t, based on analysis, k (μCi).

TA_{anip} = a factor relating the airborne concentration time integral of radionuclide, i, to the dose equivalent to organ, n, of a person in age group, a, exposed via pathway, p (air-grass-cow-milk), $\frac{\text{mrem/yr}}{(\mu\text{Ci/m}^3)}$; See Appendix 3B.

When the dose rate due to H-3, I-131, I-133 and radionuclides in particulate form is calculated for the purpose of assessing compliance with Control 3.2, a hypothetical infant located where the minimum atmospheric dispersion from the plant occurs is assumed as the receptor.

3.0 RADIOACTIVE GASEOUS EFFLUENTS

CONTROL 3.2 : DOSE RATE FROM RADIOACTIVE GASEOUS EFFLUENTS, (continued)

METHOD 3.2 : Dose Rate Due to Gaseous Effluent, (continued)

C. H-3, I-131, I-133 and PARTICULATE DOSE RATE, (continued)

For the radioiodines and particulates with half-lives greater than eight days, the effective dose transfer factor, TA_{anip}, is based solely on the radioiodines (I-131, I-133). This approach was selected because the radioiodines contribute essentially all of the dose to the infant's thyroid via the inhalation and the grass-cow-milk pathway. The infant's thyroid via the grass-cow-milk pathway is the critical organ and controlling pathway respectively for the releases of radioiodines and particulates.

The dose rate calculation will be based on the location of minimum dispersion adjusted for deposition according to the reference meteorology data in Appendix 3A-2. According to those data, the minimum dispersion offsite occurs at the site boundary 1950 meters SSE of the plant and the χ_d/Q value is 5.0×10^{-7} sec/m^3. That location is identified in Figure 3-2. Alternately, averaged meteorological dispersion data coincident with the period of release may be used to evaluate the dose rate. These radionuclide concentrations in airborne effluents, Q_{ik}, are measured according to the sample and analysis schedule in ODCM Table 3.2-1

BASIS 3.2 :

This control applies to the release of radioactive materials in gaseous effluents from all units at the site. The specified gamma and beta dose rates, above background, provides the datum against which the gaseous effluent monitor setpoints are determined, using the methods described in this ODCM, pursuant to Control 3.1. In essence, Control 3.2 is an instantaneous limit.

Adherence to Controls 3.3 through 3.5 provide assurance that levels of radioactive materials in air in UNRESTRICTED AREAS will, on the average, be a small fraction of the concentration limits and result in exposures to MEMBERS OF THE PUBLIC within the objectives of Appendix I to 10 CFR Part 50 and 40 CFR 190.

Control 3.2 permits the flexibility of operation, compatible with considerations of health and safety, to provide a dependable source of power even under circumstances that temporarily result in elevated releases, but still within the limit as specified in 10 CFR Part 20.1302 (b)(2)(ii).

3.0 RADIOACTIVE GASEOUS EFFLUENTS

CONTROL 3.2 : DOSE RATE FROM RADIOACTIVE GASEOUS EFFLUENTS, (continued)

METHOD 3.2 : Dose Rate Due to Gaseous Effluent, (continued)

Table 3.2-2

Transfer Factors for Maximum Dose to a Person Offsite due to Radioactive Noble Gases

	Air Dose Transfer Factors	
	$P_{\gamma i}$	$S_{\beta i}$
Radionuclide	mrem / (μCi sec/m^3)	mrem / (μCi sec/m^3)
Kr-83m	2.4E-9	--
Kr-85m	3.7E-5	4.6E-5
Kr-85	5.1E-7	4.2E-5
Kr-87	1.9E-4	3.1E-4
Kr-88	4.7E-4	7.5E-5
Kr-89	5.3E-4	3.2E-4
Kr-90	4.9E-4	2.3E-4
Xe-131m	2.9E-6	1.5E-5
Xe-133m	8.0E-6	3.1E-5
Xe-133	9.3E-6	9.7E-6
Xe-135m	9.9E-5	2.3E-5
Xe-135	5.7E-5	5.9E-5
Xe-137	4.5E-5	3.9E-4
Xe-138	2.8E-4	1.3E-4
Ar-41	2.8E-4	8.5E-5

Ref: Regulatory Guide 1.109, Revision 1, Table B-1.

Note: Values in the regulatory guide are quoted in units of pCi*yr, to convert to units of μCi*sec multiply by a factor of 3.171 E-2.

3.0 RADIOACTIVE GASEOUS EFFLUENTS

CONTROL 3.2 : DOSE RATE FROM RADIOACTIVE GASEOUS EFFLUENTS, (continued)

METHOD 3.2 : Dose Rate Due to Gaseous Effluent, (continued)

Table 3.2-3

Transfer Factors for Maximum Offsite Air Dose

	Air Dose Transfer Factors	
Radionuclide	$A_{\gamma i}$ mrad / (μCi sec/m^3)	$A_{\beta i}$ mrad / (μCi sec/m^3)
Kr-83m	6.1E-7	9.1E-6
Kr-85m	3.9E-5	6.2E-5
Kr-85	5.4E-7	6.2E-5
Kr-87	2.0E-4	3.3E-4
Kr-88	4.8E-4	9.3E-5
Kr-89	5.5E-4	3.4E-4
Kr-90	5.2E-4	2.5E-4
Xe-131m	4.9E-6	3.5E-5
Xe-133m	1.0E-5	4.7E-5
Xe-133	1.1E-5	3.3E-5
Xe-135m	1.1E-4	2.3E-5
Xe-135	6.1E-5	7.8E-5
Xe-137	4.8E-5	4.0E-4
Xe-138	2.9E-4	1.5E-4
Ar-41	2.9E-4	1.0E-4

Ref : Regulatory Guide 1.109, Revision 1, Table B-1

Note : Values in the regulatory guide are in units of pCi*yr, to convert to units of μCi*sec multiply by a factor of 3.171 E-2.

3.0 RADIOACTIVE GASEOUS EFFLUENTS

CONTROL 3.2 : DOSE RATE FROM RADIOACTIVE GASEOUS EFFLUENTS, (continued)

METHOD 3.2 : Dose Rate Due to Gaseous Effluent, (continued)

EXAMPLE CALCULATIONS : Dose Rate Due to Gaseous Effluent

Determining the Total Body Dose Rate from Noble Gas

The total body dose rate from the radioactive noble gases may be calculated at any location by assuming a person is immersed in and irradiated by a semi-infinite cloud of the noble gases. Compliance is assessed and alarm setpoints established based on the dose rate at the site boundary where the minimum atmospheric dispersion from the plant occurs. This location is 1950 meters SSE of the plant where $\chi/Q = 5.8 \times 10^{-7}$ sec/m^3. The dose rate D may be calculated using equation 3.2-1.

Example:

During a 31 day period, the following noble gas activity was released from Unit 3. The total body dose rate is calculated by:

$$D_{TB} = \frac{\chi}{Q} \bullet \frac{1}{t} \sum_i Q_i \bullet P_{\gamma i}$$

where:

$\dot{D}_{TB}$ = Dose rate to total body from noble gases, (mrem/year)

χ/Q = atmospheric dispersion factor at the off-site location of interest, (sec/m^3)

t = Averaging time of release, i.e., increment of time during which Q_i was released, (year)

Q_i = quantity of noble gas radionuclide i released during the averaging time, (μCi)

$P_{\gamma i}$ = factor converting time integrated concentration of noble gas radionuclide, i, at ground level, to total body dose, $\frac{\text{mrem}}{(\mu\text{Ci}\cdot\text{sec/m}^3)}$; See Reference Table 3.2-2

3.0 RADIOACTIVE GASEOUS EFFLUENTS

CONTROL 3.2 : DOSE RATE FROM RADIOACTIVE GASEOUS EFFLUENTS, (continued)

METHOD 3.2 : Dose Rate Due to Gaseous Effluent, (continued)

EXAMPLE CALCULATIONS : Dose Rate Due to Gaseous Effluent, (continued)

The total body dose is summarized in the following table:

Radionuclide	Q_i	$P_{\gamma i}$	$Q_iP_{\gamma i}$
Kr-85m	3.6E-2	3.7E-5	1.33E-6
Kr-85	2.8E-1	5.1E-7	1.43E-7
Kr-87	2.5E-3	1.9E-4	4.75E-7
Kr-88	1.4E-2	4.7E-4	6.58E-6
Xe-131m	1.0E+1	2.9E-6	2.90E-5
Xe-133	4.3E+1	9.3E-6	4.00E-4
Xe-135	6.0E-1	5.7E-5	3.42E-5
Ar-41	7.7E-2	2.6E-4	2.00E-5

The value of $\Sigma Q_iP_{\gamma i}$ is equal to 4.92 E-4

Note: The time (t) is for 31 day period stated as years which equals 31d/365d/yr or 0.085 yr. The value of 1/t, in the equation, is 1/0.085 = 11.77.

D = 5.8 E-7 x 11.77 x 4.94 E-4 = 3.36 E-9 mRem/yr

3.0 RADIOACTIVE GASEOUS EFFLUENTS

CONTROL 3.2 : DOSE RATE FROM RADIOACTIVE GASEOUS EFFLUENTS, (continued)

METHOD 3.2 : Dose Rate Due to Gaseous Effluent, (continued)

EXAMPLE CALCULATIONS : Dose Rate Due to Gaseous Effluent, (continued)

Determination of Skin Dose Rate from Noble Gases

Example:

Using the noble gas release data given in the previous example, the skin dose rate is calculated by:

$$\dot{D}_S = \frac{\chi}{Q} \bullet \frac{1}{t}[\sum_i Q_i \bullet S_{\beta i} + 1.11 Q_i \bullet A_{\gamma i}]$$

where:

$\dot{D}_S$ = dose rate to skin from radioactive noble gases (mrem/year)

$S_{\beta i}$ = factor converting time integrated concentration of noble gas radionuclide i at ground-level, to skin dose from beta radiation, $\frac{\text{mrem}}{(\mu\text{Ci}\cdot\text{sec/m}^3)}$; Reference Table 3.2-2

1.11 = ratio of tissue dose equivalent to air dose in a radiation field, (mrem/mrad).

$A_{\gamma i}$ = factor for converting time integrated concentration of noble gas radionuclide i in a semi-infinite cloud, to air dose from its gamma radiation, $\frac{\text{mrad}}{(\mu\text{Ci}\cdot\text{sec/m}^3)}$; Listed in Table 3.2-3

3.0 RADIOACTIVE GASEOUS EFFLUENTS

CONTROL 3.2 : DOSE RATE FROM RADIOACTIVE GASEOUS EFFLUENTS, (continued)

METHOD 3.2 : Dose Rate Due to Gaseous Effluent, (continued)

EXAMPLE CALCULATIONS : Dose Rate Due to Gaseous Effluent, (continued)

The skin dose rate is summarized in the following table:

Nuclide	Q_i	$S_{\beta i}$	$Q_i S_\beta i$	A_{γ_i}	$Q_i A_{\gamma i}$
Kr-85m	3.6E-2	4.6E-5	1.7E-6	3.9E-5	1.40E-6
Kr-85	2.8E-1	4.2E-5	1.2E-5	5.4E-7	1.51E-7
Kr-87	2.5E-3	3.1E-4	7.8E-7	2.0E-4	5.00E-7
Kr-88	1.4E-2	7.5E-5	1.1E-6	4.8E-4	6.72E-6
Xe-131m	1.0E+1	1.5E-5	1.5E-4	4.9E-6	4.90E-5
Xe-133	4.3E-1	9.7E-6	4.2E-6	1.1E-5	4.73E-6
Xe-135	6.0E-1	5.9E-5	3.5E-5	6.1E-5	3.66E-5
Ar-41	7.6E-2	8.5E-5	6.5E-6	2.9E-4	2.20E-5

The value of $\Sigma Q_i S_{\beta i}$ = 2.11 E-4 and the value of $\Sigma Q_i A_{\gamma i}$ = 1.21 E-4

D =5.8E-7 x 11.77 (2.11E-4 + [1.11 x 1.21 E-4]) = 2.36 E-9 mrem/yr

Note: The value of 1/t is 11.77 (see previous Example table note), and χ/Q is 5.8E-7 sec/m^3

3.0 RADIOACTIVE GASEOUS EFFLUENTS

CONTROL 3.2 : DOSE RATE FROM RADIOACTIVE GASEOUS EFFLUENTS, (continued)

METHOD 3.2 : Dose Rate Due to Gaseous Effluent, (continued)

EXAMPLE CALCULATIONS : Dose Rate Due to Gaseous Effluent, (continued)

Determining Dose Rate from Tritium, Iodines, and Particulates

The total body and/or organ dose rate due to tritium, radioiodines, and radioactive particulates with half-lives greater than 8 days released in the effluent air may be calculated at any location off-site using equation 3.2-3.

For assessing compliance with Control 3.2, the thyroid dose rate for a hypothetical infant located at the site boundary where the minimum atmospheric dispersion from the plant occurs is the assumed receptor.

Example:

During a calendar quarter (2184 hrs) the following activities were released from Unit 4. The dose rate from activity is calculated by:

$$D_{anp} = \frac{1}{3600t} \bullet \frac{\chi_d}{Q} \sum_k \sum_i Q_{ik} \bullet TA_{anip}$$

where:

D_{anp} = dose equivalent rate to body organ, n, of a person in age group, a, exposed via pathway, p, to radionuclide, i, identified in analysis, k, of effluent air, (mrem/year)

3600 = conversion constant, (sec/hr)

t = period of time over which the effluent releases are averaged, (2184 hrs/qtr)

χ_d/Q = quantity of radionuclide, i, released during time increment, t, based on analysis, k, (μCi).

Q_{ik} = quantity of radionuclide, i, released during increment time, t, based on analysis, k, (μCi).

3.0 RADIOACTIVE GASEOUS EFFLUENTS

CONTROL 3.2 : DOSE RATE FROM RADIOACTIVE GASEOUS EFFLUENTS, (continued)

METHOD 3.2 : Dose Rate Due to Gaseous Effluent, (continued)

EXAMPLE CALCULATIONS : Dose Rate Due to Gaseous Effluent, (continued)

TA_{anip} = a factor relating the airborne concentration time integral of radionuclide, i, to the dose equivalent to organ, n, of a person in age group, a (infant), exposed via pathway, p (air-cow-grass-milk).

$\frac{\text{mrem/yr}}{(\mu\text{Ci/m}^3)}$; See Appendix 3B

The dose rate from tritium; iodine and particulate is summarized in the following table.

Radionuclide	Q_{ik}	TA_{anip}	$Q_{ik}TA_{anip}$
H-3	1.6E+5	2.37E+3	3.79E+8
Cr-51	8.0E-6	1.8E+4	1.44E-1
Co-58	5.0E-7	0	0
Co-60	9.5E-7	0	0
I-131	3.5E-7	9.94E+11	3.48E+5
Cs-137	2.0E-6	0	0

Notes: The time factor 1/3600t = 1.27E-7 where t = 2184hrs/qtr
The value of $\Sigma Q_{ik}TA_{anip}$ = 3.8E+8
The value of χ_d/Q = 5.8E-7

D_{anp} = 1.27E-7 x 5.8E-7 x 3.8E+8 = 2.8E-5 mrem/yr

3.0 RADIOACTIVE GASEOUS EFFLUENTS

CONTROL 3.3 : AIR DOSE FROM NOBLE GASES

The air dose due to noble gases released in gaseous effluent, from each unit, to areas at and beyond the SITE BOUNDARY (see Figure 1.5 - 1) shall be limited to the following:

a. During any calendar quarter : Less than or equal to 5 mrad for gamma radiation and less than or equal to 10 mrad for beta radiation, and

b. During any calendar year : Less than or equal to 10 mrad for gamma radiation and less than or equal to 20 mrad for beta radiation.

APPLICABILITY : At all times.

ACTION

a. With the calculated air dose from radioactive noble gases in gaseous effluents exceeding any of the above limits, prepare and submit to the Commission within 30 days, pursuant to Control 1.6.6, a Special Report that identifies the cause(s) for exceeding the limit(s) and defines the corrective actions that have been taken to reduce the releases and the proposed corrective actions to be taken to assure that subsequent releases will be in compliance with the above limits.

b. The provisions of Administrative Control section 1.6.3 are not applicable.

SURVEILLANCE REQUIREMENTS

3.3.1 Cumulative dose contributions for the current calendar quarter and current calendar year for noble gases shall be determined in accordance with the methodology and parameters in this ODCM at least once per 31 days.

3.0 RADIOACTIVE GASEOUS EFFLUENTS

CONTROL 3.3 : AIR DOSE FROM NOBLE GASES, (continued)

METHOD 3.3.1 : NOBLE GAS GAMMA RADIATION DOSE

The gamma radiation dose to air off site as a consequence of noble gas discharged from each unit can be calculated with the equation :

$$D_\gamma = \frac{\chi}{Q} \sum_j \sum_i Q_j \bullet A_{\gamma i} \qquad \text{Eqn 3.3-1}$$

where :

D_γ = noble gas gamma dose to air, (mrad)

$A_{\gamma i}$ = factor converting time integrated, ground level concentration of noble gas radionuclide i to air dose from gamma radiation listed in Table 3.3-1, $\frac{\text{mrad}}{(\mu\text{Ci} \cdot \text{sec/m}^3)}$

χ/Q = atmospheric dispersion factor at the off-site location of interest, (sec/m^3)

Q_j = the measured gaseous radioactivity released via a stack or vent during a single counting interval, j, (μCi)

Surveillance 3.3.1 is satisfied by calculating the noble gas gamma radiation dose to air at the location identified in Figure 3-2. At that location, 1950 meters SSE of the Plant, the reference atmospheric dispersion factor to be used is $\chi/Q = 5.8 \times 10^{-7}$ sec/m^3.

Alternately, Surveillance 3.3.1 may be satisfied, when authorized for estimating doses due to an unplanned release, by calculating the gamma dose to air with the equation

$$D_\gamma = \frac{1}{0.8} \bullet \frac{\chi}{Q} \bullet A_{\gamma_{eff}} \bullet \sum_i Q_i \qquad \text{Eqn 3.3-2}$$

where :

0.8 = a conservative factor which, in effect, increases the estimated dose to compensate for variability in radionuclide distribution

3.0 RADIOACTIVE GASEOUS EFFLUENTS

CONTROL 3.3 : AIR DOSE FROM NOBLE GASES, (continued)

METHOD 3.3.1 : Noble Gas Gamma Radiation Dose, (continued)

$A_{\gamma eff}$ = effective gamma air dose factor converting time integrated, ground level, total activity concentration of radioactive noble gas, to air dose due to gamma radiation. This factor has been derived from noble gas radionuclide distributions in routine operational releases. (Refer to Appendix 3C for a detailed explanation). The effective gamma air dose factor is:

$$A_{\gamma eff} = 1.4 \times 10^{-5} \quad \frac{\text{mrad}}{(\mu\text{Ci} \cdot \text{sec/m}^3)}$$

The remaining factors have been defined previously.

METHOD 3.3.2: NOBLE GAS BETA RADIATION DOSE

The beta radiation dose to air off site as a consequence of noble gas discharged from each unit can be calculated with the equation:

$$D_\beta = \frac{\chi}{Q} \sum_j \sum_i Q_j \bullet A_{\beta i} \qquad \text{Eqn 3.3-3}$$

where :

D_β = noble gas beta dose to air, (mrad)

$A_{\beta i}$ = factor converting time-integrated, ground level concentration of noble gas radionuclide i to air dose from beta radiation, listed in Table 3.3-1, $\frac{\text{mrad}}{(\mu\text{Ci} \cdot \text{sec/m}^3)}$

χ/Q = atmospheric dispersion factor at the off-site location of interest, (sec/m^3)

Surveillance 3.3.1 is satisfied by calculating the noble gas beta radiation dose to air at the location identified in Figure 3-2. At that location, 1950 meters SSE of the Plant, the reference atmospheric dispersion factor to be used is $\chi/Q = 5.8 \times 10^{-7}$ sec/m^3.

3.0 RADIOACTIVE GASEOUS EFFLUENTS

CONTROL 3.3 : AIR DOSE FROM NOBLE GASES, (continued)

METHOD 3.3.2 Noble Gas Beta Radiation Dose, (continued)

Alternately, Control 3.3 may be satisfied, when authorized for estimating doses due to an unplanned release, by calculating the beta radiation dose to air with the equation

$$D_\beta = \frac{1}{0.8} \bullet \frac{\chi}{Q} \bullet A_{\beta eff} \bullet \sum_i Q_i \qquad \text{Eqn 3.3-4}$$

where

0.8 = a conservative factor which, in effect, increases the estimated dose to compensate for variability in radionuclide distribution

$A_{\beta eff}$ = effective beta air dose factor converting time integrated, ground level, total activity concentration of radioactive noble gas to air dose due to beta radiation. This factor has been derived from noble gas radionuclide distributions in routine operational releases. (Refer to Appendix 3C for a detailed explanation.) The effective beta air dose factor is:

$$A_{\beta eff} = 3.4 \times 10^{-5} \quad \frac{\text{mrad}}{(\mu\text{Ci} \cdot \text{sec/m}^3)}$$

The remaining factors have been defined previously.

3.0 RADIOACTIVE GASEOUS EFFLUENTS

CONTROL 3.3 : AIR DOSE FROM NOBLE GASES, (continued)

BASIS 3.3 : DOSE - NOBLE GASES

This Control applies to the release of radioactive materials in gaseous effluent from each unit at the site. For units with shared radwaste treatment systems, the gaseous effluents from the shared system are proportioned among the units sharing that system.

This control is provided to implement the requirements of Appendix I, 10 CFR Part 50. The Control implements the guides set forth in Appendix I. The ACTION statements provide the required operating flexibility and at the same time implement the guides set forth in Appendix I to assure that the releases of radioactive material in gaseous effluents to UNRESTRICTED AREAS will be kept "as low as is reasonably achievable." The Surveillance Requirements implement the requirements in Appendix I that conformance with the guides of Appendix I be shown by calculational procedures based on models and data such that the actual exposure of a MEMBER OF THE PUBLIC through appropriate pathways is unlikely to be substantially under estimated. The dose calculation methodology and parameters established in this ODCM for calculating the doses due to the actual release rates of radioactive noble gases in gaseous effluent are consistent with the methodology provided in Regulatory Guide 1.109, "Calculation of Annual Doses to Man from Routine Releases of Reactor Effluents for the Purpose of Evaluating Compliance with 10 CFR Part 50, Appendix I," Revision 1, October 1977 and Regulatory Guide 1.111, "Methods for Estimating Atmospheric Transport and Dispersion of Gaseous Effluents in Routine Releases from Light Water Cooled Reactors," Revision 1, July 1977. The ODCM equations provided for determining the air doses at and beyond the SITE BOUNDARY are based upon the historical average atmospheric conditions.

3.0 RADIOACTIVE GASEOUS EFFLUENTS

CONTROL 3.3 : AIR DOSE FROM NOBLE GASES, (continued)

METHODS 3.3.1 & 3.3.2: Noble Gas Gamma & Beta Radiation Dose, (continued)

Table 3.3-1

Transfer Factors for Maximum Off site Air Dose

Air Dose Transfer Factors

Radionuclide	$A_{\gamma i}$ mrad (μCi sec/m^3)	$A_{\beta i}$ mrad (μCi sec/m^3)
Kr-83m	6.1E-7	9.1E-6
Kr-85m	3.9E-5	6.2E-5
Kr-85	5.4E-7	6.2E-5
Kr-87	2.0E-4	3.3E-4
Kr-88	4.8E-4	9.3E-5
Kr-89	5.5E-4	3.4E-4
Kr-90	5.2E-4	2.5E-4
Xe-131m	4.9E-6	3.5E-5
Xe-133m	1.0E-5	4.7E-5
Xe-133	1.1E-5	3.3E-5
Xe-135m	1.1E-4	2.3E-5
Xe-135	6.1E-5	7.8E-5
Xe-137	4.8E-5	4.0E-4
Xe-138	2.9E-4	1.5E-4
Ar-41	2.9E-4	1.0E-4

Ref. : Regulatory Guide 1.109, Revision 1, Table B-1

Note : Values in the regulatory guide are in units of pCi*yr, to convert to units of μCi*sec multiply by a factor of 3.171 E-2.

3.0 RADIOACTIVE GASEOUS EFFLUENTS

CONTROL 3.3 : AIR DOSE FROM NOBLE GASES, (continued)

EXAMPLE CALCULATION : AIR DOSE FROM NOBLE GASES

Determining the Noble Gas Gamma Radiation Dose

The cumulative dose due to gamma radiation from radioactive noble gases discharged from the plant shall be calculated once per 31 days to verify the quarterly and annual limits will not be exceeded.

The gamma radiation dose from noble gases are calculated at the site boundary where the minimum atmospheric dispersion occurs, i.e., 1950 meters SSE of the plant where $\chi/Q = 5.8 \times 10^{-7}$ sec/m^3. The gamma dose is calculated using equation 3.3-1 or 3.3-2. The example given here uses equation 3.3-1.

Example:

The noble gas activity discharged during a 31 day period from gas decay tanks, containment purges, and the spent fuel pit vent were totaled as tabulated below. The gamma dose from the noble gas release is calculated as follows:

$$D_\gamma = \frac{\chi}{Q} \sum_j \sum_i Q_j \bullet A_{\gamma i} \qquad \text{(Eqn 3.3-1)}$$

where:

D_γ = The noble gas dose to air, (mrad).

χ/Q = The atmospheric dispersion factor for a mixed-mode discharge, (sec/m^3).

Q_j = The measured radioactivity released via stack or vent during a single counting interval, j (μCi).

$A_{\gamma i}$ = Factor converting time integrated, ground-level concentration of noble gas radionuclide i to air dose from gamma radiation listed in Table 3.3-1 $\frac{\text{mrad}}{(\mu\text{Ci}\cdot\text{sec/m}^3)}$

3.0 RADIOACTIVE GASEOUS EFFLUENTS

CONTROL 3.3 : AIR DOSE FROM NOBLE GASES, (continued)

EXAMPLE CALCULATION : AIR DOSE FROM NOBLE GASES, (continued)

The noble gas gamma radiation dose is summarized in the following table.

Radionuclide	Q_j	$A_{\gamma i}$	$Q_jA_{\gamma i}$
Kr-85m	5.4E+1	3.9E-5	2.1E-3
Kr-85	5.4E+1	5.4E-7	2.9E-5
Kr-87	5.4E+1	2.0E-4	1.1E-2
Kr-88	5.4E+1	4.8E-4	2.6E-2
Xe-131m	5.4E+1	4.9E-6	2.6E-4
Xe-133	5.4E+1	1.1E-5	5.9E-4
Xe-135	5.4E+1	6.1E-5	3.3E-3
Ar-41	5.4E+1	2.9E-4	1.6E-2

The value of $\Sigma Q_jA_{\gamma i}$ = 5.93E-2

D_γ = 5.93E-2 x 5.8E-7 = 3.44-8 mRad

Determining Noble Gas Beta Radiation Dose

The beta air dose due to noble gases discharged from the plant shall be determined for the current calendar quarter and current calendar year at least once per 31 days. The beta air dose is calculated in the same manner as the gamma air dose using the beta air dose factors from Table 3.3-1 and Equation 3.3-3 or 3.3-4.

3.0 RADIOACTIVE GASEOUS EFFLUENTS

CONTROL 3.4 : DOSE - IODINE-131, IODINE-133, TRITIUM, AND RADIOACTIVE MATERIAL IN PARTICULATE FORM

The dose to a MEMBER OF THE PUBLIC from Iodine 131, Iodine 133, tritium, and all radionuclides in particulate form with half lives greater than 8 days, in gaseous effluents released, from each unit, to areas at and beyond the SITE BOUNDARY (see Figure 1.5-1) shall be limited to the following :

a. During any calendar quarter : Less than or equal to 7.5 mrems to any organ and,

b. During any calendar year: Less than or equal to 15 mrems to any organ.

APPLICABILITY : At all times.

ACTION :

a. With the calculated dose from the release of Iodine 131, Iodine 133, tritium, and radionuclides in particulate form with half lives greater than 8 days, in gaseous effluents exceeding any of the above limits, prepare and submit to the Commission within 30 days, pursuant to Control 1.6.6, a Special Report that identifies the cause(s) for exceeding the limit(s) and defines the corrective actions that have been taken to reduce the releases and the proposed corrective actions to be taken to assure that subsequent releases will be in compliance with the above limits.

b. The provisions of Administrative Control section 1.6.3 are not applicable.

SURVEILLANCE REQUIREMENTS

3.4.1 Cumulative dose contributions for the current calendar quarter and current calendar year for Iodine 131, Iodine 133, tritium and radionuclides in particulate form with half-lives greater than 8 days shall be determined in accordance with the methodology and parameters in this ODCM at least once per 31 days.

3.0 RADIOACTIVE GASEOUS EFFLUENTS

CONTROL 3.4 : DOSE - IODINE-131, IODINE-133, TRITIUM, AND RADIOACTIVE MATERIAL IN PARTICULATE FORM, (continued)

METHOD 3.4.1 : DOSE DUE TO IODINE, TRITIUM, AND PARTICULATES IN GASEOUS EFFLUENTS

A. Determining the Quantity of Iodine, Tritium, and Particulates

Radionuclides, other than noble gases, in gaseous effluents that are measured by the radioactive gaseous waste sampling and analysis program, described in ODCM Table 3.2-1, are used as the release term in dose calculations. Airborne releases are discharged either via a stack above the top of the containment building or via other vents and are treated as a mixed mode release from a single location. Releases of steam from the secondary system concurrent with primary to secondary leakage will also result in the release of activity to the atmosphere. For steam generator blowdown, using a blowdown sample analysis, it is assumed that 5% of the I-131 and I-133 and 33% of the tritium in the blowdown stream become airborne with the remainder staying in the liquid phase. For other unmonitored releases, the quantity of airborne releases may be determined by performing a steam mass balance. For each of these release combinations, samples are analyzed weekly, monthly, quarterly, or for each batch releases according to Table 3.2-1

Each sample provides a measure of the concentration of specific radionuclides, C_i, in gaseous effluent discharged at flow rate, F, during a time increment, t. Thus, each release is quantified according to the relation

$$Q_{ik} = C_{ik} \bullet \sum_j F_j \bullet t_j \qquad \text{Eqn 3.4-1}$$

where :

Q_{ik} = the quantity of radionuclide i released in a given effluent stream based on a single analysis, k, (μCi)

C_{ik} = concentration of radionuclide i in a gaseous effluent identified by analysis, k, (μCi/cc)

F_j = effluent stream discharge rate during time increment, t_j, (cc/sec)

t_j = time increment, t, during which radionuclide i at concentration C_{ik} is being discharged, (sec).

3.0 RADIOACTIVE GASEOUS EFFLUENTS

CONTROL 3.4 : DOSE - IODINE-131, IODINE-133. TRITIUM, AND RADIOACTIVE MATERIAL IN PARTICULATE FORM, (continued)

METHOD 3.4.1 : DOSE DUE TO IODINE, TRITIUM, AND PARTICULATES IN GASEOUS EFFLUENTS, (continued)

A. Determining the Quantity of Iodine, Tritium, and Particulates, (continued)

Note: A steam mass to determine other unmonitored releases may be determined using the following:

$$F_j = M_w - (M_l + M_s)$$

where:

M_w = the measured mass of makeup water entering the secondary system during time interval, t_j , (gm /sec).

M_l = the measured mass of water discharged from the secondary system as liquid during time interval, t_j, e.g. steam generator blowdown.

M_s = the measured mass of steam or non-condensable gases discharged from the secondary system during time interval, t_j, e.g. air ejector discharge.

Note: It is assumed that all of the I-131, I-133, and tritium in the other unmonitored releases are discharged as airborne species. It also assumed that gm/sec is equivalent to cc/sec.

B. Calculating the Dose Due to Iodine, Tritium, and Particulates

A person may be exposed directly to an airborne concentration of radioactive material discharged in an effluent gaseous stream and indirectly via pathways involving deposition of radioactive material onto the ground. Dose estimates should account for the exposure via the following pathways:

- direct radiation from airborne radionuclides (except noble gases)
- inhalation
- direct radiation from ground plane deposition
- fruits and vegetables
- air-grass-cow-meat
- air-grass-cow-milk

3.0 RADIOACTIVE GASEOUS EFFLUENTS

CONTROL 3.4 : DOSE - IODINE-131, IODINE-133. TRITIUM, AND RADIOACTIVE MATERIAL IN PARTICULATE FORM, (continued)

METHOD 3.4.1 : DOSE DUE TO IODINE, TRITIUM, AND PARTICULATES IN GASEOUS EFFLUENTS, (continued)

B. Calculating the Dose Due to Iodine, Tritium, and Particulates, (continued)

Of all these pathways, the air-grass-cow-milk pathway is by far the controlling dose contributor. The radioiodines contribute essentially all of the dose, by this pathway, with I-131 typically contributing greater than 95%. The dose transfer factors for the radioiodines are much greater than for any of the other radionuclides. The critical organ is the infant's thyroid.

For this reason, the potential critical organ dose via airborne effluents can be estimated by determining an effective dose transfer factor for the radioiodines based on the typical radioactive effluent distribution, the air-grass-cow-milk pathway, and the infant thyroid as the receptor. Then for conservatism the total cumulative release of all radioiodines and particulates can be used along with the effective dose transfer factor to determine a conservative estimate of the infant thyroid dose.

Surveillance 3.4.1, requires an evaluation be performed once per 31 days to verify that the accumulated total body or organ dose for the current calendar quarter and calendar year does not exceed the limit as given in Control 3.4. Dose commitment due to iodine and particulates may be calculated by using the following equation:

$$DM_k = \frac{3.17x10^{-8}}{0.8} \bullet \frac{D}{Q} \bullet TG_{131} \bullet \sum_i Q_{ik} \qquad Eqn\ 3.4-2$$

where:

DM_k = the dose commitment to an infant's thyroid received from exposure via the air-grass-cow-milk pathway and attributable to iodine identified in analysis k of effluent air, (mrem)

3.17×10^{-8} = conversion constant, (yr/sec)

0.8 = a conservatism factor which, in effect, increases the estimated dose to compensate for variability in the radionuclide distribution.

D/Q = relative deposition rate onto ground from a mixed mode atmospheric release (m^{-2})

3.0 RADIOACTIVE GASEOUS EFFLUENTS

CONTROL 3.4 : DOSE - IODINE-131, IODINE-133. TRITIUM, AND RADIOACTIVE MATERIAL IN PARTICULATE FORM, (continued)

METHOD 3.4.1 : DOSE DUE TO IODINE, TRITIUM, AND PARTICULATES IN GASEOUS EFFLUENTS, (continued)

B. Calculating the Dose Due to Iodine, Tritium, and Particulates, (continued)

TG_{131} = factor converting ground deposition of radioiodines to the dose commitment to an infant's thyroid exposed via the grass-cow-milk pathway, $\frac{\text{mrem/yr}}{(\mu\text{Ci/m}^2 \cdot \text{sec})}$

Q_{ik} = the quantity of radionuclide, i (I-131 and I-133), released in a given effluent stream based on a single analysis, k, (μCi).

Surveillance 3.4.1 is satisfied by calculating the dose to an infant from iodine and particulates discharged as airborne effluents via the air-grass-cow-milk pathway and is evaluated by assuming a cow is on a pasture 4.5 miles west of the plant. (There are no milk or meat animals within 5 miles). At that location the reference atmospheric deposition factor is $D/Q = 5 \times 10^{-10}\ m^{-2}$.

When equation 3.4-2 is used to estimate the critical organ dose commitment, the effective dose transfer factor is :

$$TG_{131} = 6.5 \times 10^{11} \quad \frac{\text{mrem/yr}}{(\mu\text{Ci/m}^2 \cdot \text{sec})}$$

The reference data from which TG_{131} was derived are summarized in Table 3C-2 of Appendix 3C.

3.0 RADIOACTIVE GASEOUS EFFLUENTS

CONTROL 3.4 : DOSE - IODINE-131, IODINE-133, TRITIUM, AND RADIOACTIVE MATERIAL IN PARTICULATE FORM, (continued)

METHOD 3.4.1 : DOSE DUE TO IODINE, TRITIUM, AND PARTICULATES IN GASEOUS EFFLUENTS, (continued)

B. Calculating the Dose Due to Iodine, Tritium, and Particulates, (continued)

Alternately, the requirement of Surveillance 3.4.1, to perform once per 31 days determinations of dose commitments due to radioiodine, tritium and radioactive particulates in effluent air may be made by using equations 3.4-3 through 3.4-5. These equations are normally used when calculating doses for the Annual Radioactive Effluent Release Report.

The dose commitment from exposure to airborne concentrations of radioactive material other than noble gas from a release, Q_{ik}, via the inhalation and irradiation pathways is calculated with the equation

$$D_{ank} = 3.17 \times 10^{-8} \bullet \frac{\chi_d}{Q} \bullet \sum_i Q_{ik} \bullet \sum_p TA_{anip} \qquad \text{Eqn 3.4-3}$$

where :

D_{ank} = the dose commitment to organ n of a person in age group a due to radionuclides identified in analysis k of an air effluent, (mrem).

3.17×10^{-8} = conversion constant, (yr/sec)

χ_d/Q = atmospheric dispersion factor adjusted for depletion by deposition, (sec/m^3).

Q_{ik} = the quantity of radionuclide i released in a given effluent stream based on analysis k, (μCi).

TA_{anip} = a factor converting airborne concentration of radionuclide i to dose commitment to organ n of a person in age group, a, where exposure is directly due to airborne material via pathway, p (inhalation, or external exposure to the plume), $\frac{\text{mrem/yr}}{(\mu\text{Ci/m}^3)}$; (See Appendix 3B).

3.0 RADIOACTIVE GASEOUS EFFLUENTS

CONTROL 3.4 : DOSE - IODINE-131, IODINE-133, TRITIUM, AND RADIOACTIVE MATERIAL IN PARTICULATE FORM, (continued)

METHOD 3.4.1 : DOSE DUE TO IODINE, TRITIUM, AND PARTICULATES IN GASEOUS EFFLUENTS, (continued)

B. Calculating the Dose Due to Iodine, Tritium, and Particulates, (continued)

The dose to a person from iodine and particulates discharged as airborne effluents via the inhalation and irradiation pathways is evaluated at the nearest garden, 3.6 miles west northwest of the plant. At that location, the reference atmospheric dispersion factor adjusted for depletion by deposition is $\chi_d/Q = 1 \times 10^{-7}$ sec/m^3, (Table 3A-2).

The dose commitment via exposure pathways involving radionuclide deposition from the atmosphere onto vegetation or the ground is calculated with the equation

$$D_{ank} = 3.17 \times 10^{-8} \bullet \frac{D}{Q} \bullet \sum_i Q_{ik} \bullet \sum_p TG_{anip} \qquad \text{Eqn 3.4-4}$$

where:

D/Q = relative deposition rate onto ground from a mixed mode atmospheric release, (m^{-2})

TG_{anip} = factor converting ground deposition of radionuclide i to dose commitment to organ n of a person in age group a where exposure is due to radioactive material via pathway p (direct radiation from ground plane deposition, fruits and vegetables, air-grass-cow-meat, or air-grass-cow-milk), See Appendix 3B. $\frac{\text{mrem/yr}}{(\mu\text{Ci/m}^2 \cdot \text{sec})}$,

3.0 RADIOACTIVE GASEOUS EFFLUENTS

CONTROL 3.4 : DOSE - IODINE-131, IODINE-133. TRITIUM, AND RADIOACTIVE MATERIAL IN PARTICULATE FORM, (continued)

METHOD 3.4.1 : DOSE DUE TO IODINE, TRITIUM, AND PARTICULATES IN GASEOUS EFFLUENTS, (continued)

B. Calculating the Dose Due to Iodine, Tritium, and Particulates, (continued)

The dose to a person from iodine and particulates discharged as airborne effluents via the air-grass-cow-milk pathway is evaluated by assuming a cow is on a pasture 4.5 miles west of the plant.(There are no milk or meat animals within 5 miles). At this location, the reference atmospheric deposition factor is D/Q = 5×10^{-10} m^{-2} (Table 3A-3).

The concentration of tritium in vegetation is a function of the airborne concentration rather than the deposition. Thus, the dose commitment from airborne tritium via vegetation, (fruits and vegetables), air- grass-cow-milk, or air-grass-cow-meat pathways is calculated with the equation

$$D_{ank} = 3.17 \times 10^{-8} \bullet \frac{\chi}{Q} \bullet \sum_{i} Q_{ik} \bullet \sum_{p} TA_{anip} \qquad \text{Eqn 3.4-5}$$

where:

χ/Q = atmospheric dispersion factor at the off-site location of interest (sec/m^3)

The dose to a person from tritium via the vegetation, (fruits and vegetables), air-grass-cow-milk, or air-grass-cow-meat pathways is evaluated at the nearest garden (with residence assumed) 3.6 miles west northwest of the plant. At that location, the reference atmospheric dispersion factor is $\chi/Q = 1 \times 10^{-7}$ sec/m^3.

3.0 RADIOACTIVE GASEOUS EFFLUENTS

CONTROL 3.4 : DOSE - IODINE-131, IODINE-133. TRITIUM, AND RADIOACTIVE MATERIAL IN PARTICULATE FORM, (continued)

METHOD 3.4.1 : DOSE DUE TO IODINE, TRITIUM, AND PARTICULATES IN GASEOUS EFFLUENTS, (continued)

B. Calculating the Dose Due to Iodine, Tritium, and Particulates, (continued)

The dose commitment via a given pathway as a result of measured discharges from a release point is accumulated with

$$D_{an} = \sum_k D_{ank} \qquad \text{Eqn 3.4-6}$$

where:

D_{an} = the dose commitment to organ n of a person in age group, a.

k = the counting index; it may represent either:
p, analysis of a grab sample
w, a weekly sample analysis
m, a monthly composite analysis, or
q, a quarterly composite analysis

3.0 RADIOACTIVE GASEOUS EFFLUENTS

CONTROL 3.4 : DOSE - IODINE 131, IODINE 133, TRITIUM, AND RADIOACTIVE MATERIAL IN PARTICULATE FORM, (continued)

BASIS 3.4 : DOSE - IODINE 131, IODINE 133, TRITIUM, AND RADIOACTIVE MATERIAL IN PARTICULATE FORM

This control applies to the release of radioactive materials in gaseous effluents from each unit at the site. For units with shared radwaste treatment systems, the gaseous effluents from the shared systems are proportioned among the units sharing that system.

This control is provided to implement the requirements of Appendix I, 10 CFR Part 50. The Control implements the guides set forth in Appendix I. The ACTION statements provide the required operating flexibility and at the same time implement the guides set forth in Appendix I to assure that the releases of radioactive materials in gaseous effluents to UNRESTRICTED AREAS will be kept "as low as is reasonably achievable." The ODCM calculation methods specified in the Surveillance Requirements implement the requirements in Appendix I that conformance with the guides of Appendix I be shown by calculational procedures based on models and data such that the actual exposure of a MEMBER OF THE PUBLIC through appropriate pathways is unlikely to be substantially underestimated. The ODCM calculational methodology and parameters for calculating the doses due to the actual release rates of the subject materials are consistent with the methodology provided in Regulatory Guide 1.109, "Calculation of Annual Doses to Man from Routine Releases of Reactor Effluents for the Purpose of Evaluating Compliance with 10 CFR Part 50, Appendix I," Revision 1, October 1977 and Regulatory Guide 1.111, "Methods for Estimating Atmospheric Transport and Dispersion of Gaseous Effluents in Routine Releases from Light-Water-Cooled Reactors," Revision 1, July 1977. These equations also provide for determining the actual doses based upon the historical average atmospheric conditions. The release rate specifications for Iodine131, Iodine-133, tritium, and radionuclides in particulate form with half-lives greater than 8 days are dependent upon the existing radionuclide pathways to man in the areas at and beyond the SITE BOUNDARY. The pathways that were examined in the development of the calculations were: (1) individual inhalation of airborne radionuclides, (2) deposition of radionuclides onto green leafy vegetation with subsequent consumption by man, (3) deposition onto grassy areas where milk animals and meat producing animals graze with consumption of the milk and meat by man, and (4) deposition on the ground with subsequent exposure of man.

3.0 RADIOACTIVE GASEOUS EFFLUENTS

CONTROL 3.4 : DOSE - IODINE-131, IODINE-133, TRITIUM, AND RADIOACTIVE MATERIAL IN PARTICULATE FORM, (continued)

EXAMPLE CALCULATIONS : Determining Dose Due to Iodine, Tritium, and Particulates

Dose estimate should account for exposure of a person via the following pathways involving deposition of radioactivity on the ground.

- direct radiation from airborne radionuclides except noble gases
- inhalation
- direct radiation from ground plane deposition
- fruits and vegetables
- air-grass-cow-meat
- air-grass-cow-milk

The requirement to determine the dose commitments due to radioiodine, tritium, and radioactive particulates once per 31 days may be satisfied by using Equations 3.4-2, 3.4-3, 3.4-4, and 3.4-5.

Example:

Calculate the organ and total body dose to an infant from tritium inhalation and irradiation pathways and from radioiodine and particulates via the grass-cow-milk pathway using Equations 3.4-4 and 3.4-5. The major non-noble gas activities released over a 31 day period were used for the calculation. The atmospheric dispersion factor and deposition rate values for a mixed mode release at 3.6 miles WNW and 4.5 miles west of the plant respectively were obtained from Tables 3A-2 and 3A-3. Factors TA_{anip} and TG_{anip} converting airborne activity to dose commitment are obtained from Appendix 3B for the organ, age group, and pathway.

For Iodine and Particulate:

$$D_{ank} = 3.17 \times 10^{-8} \bullet \frac{D}{Q} \bullet \sum_i Q_{ik} \bullet \sum_p TG_{anip} \qquad \text{Eqn 3.4-4}$$

For Tritium;

$$D_{ank} = 3.17 \times 10^{-8} \bullet \frac{\chi}{Q} \bullet \sum_i Q_{ik} \bullet \sum_p TA_{anip} \qquad \text{Eqn 3.4-5}$$

3.0 RADIOACTIVE GASEOUS EFFLUENTS

EXAMPLE CALCULATIONS : Determining Dose Due to Iodine, Tritium, and Particulates, (continued)

where:

χ/Q = atmospheric dispersion factor for a mixed mode release, (sec/m3).

D/Q = relative deposition rate onto ground from a mixed mode atmospheric release (m^{-2}).

Q_{ik} = the quantity of radionuclide i released in a given effluent stream based on analysis k, (μCi).

TA_{anip} = a factor converting airborne concentration of radionuclide i to a dose commitment to organ n of a person in age group a where exposure is directly due to airborne material via pathway P (inhalation or external exposure to the plume), $\frac{\text{mrem/yr}}{(\mu\text{Ci/m}^3)}$.

TG_{anip} = factor converting ground deposition of radionuclide i to dose commitment to organ n of a person in age group a where exposure is due to radioactive material via pathway P (direct radiation from ground plane deposition, fruits and vegetables, air-grass-cow-meat, or air-grass-cow-milk) $\frac{\text{mrem/yr}}{(\mu\text{Ci/m}^2 \cdot \text{sec})}$

D_{ank} = the dose commitment to organ n of a person in age group a due to radionuclides identified in analysis k of an air effluent, (mrem).

The organ and total body dose to an infant from radioiodines and particulates via the grass-cow-milk pathway is shown in the following worksheet.

3.0 RADIOACTIVE GASEOUS EFFLUENTS

CONTROL 3.4 : DOSE - IODINE 131, 133, TRITIUM, AND RADIOACTIVE MATERIAL IN PARTICULATE FORM, (continued)

EXAMPLE CALCULATIONS : Determining Dose Due to Iodine, Tritium, and Particulates, (continued)

GRASS-COW-MILK PATHWAY						
Organ Radionuclide	**Q_{ik}**	**TG_{anip}**	**χ/Q or D/Q**	**3.17E-8**	**D_{ank}**	**Total Dose Sum of D_{ank} (mrem)**
Bone						
H-3	2.0E+8	0			0	
Co-58	2.0E+1	0			0	
Co-60	1.7E+1	0			0	
I-131	3.9E+3	2.59E+9	5E-10	3.17E-8	1.6E-4	
Cs-137	6.1E+1	6.44E+10	5E-10	3.17E-8	6.2E-5	2.2E-4
Liver						
H-3	2.0E+8	2.37E+3	1E-7	3.17E-8	1.5E-3	
Co-58	2.0E+1	2.55E+7	5E-10	3.17E-8	8.1E-9	
Co-60	1.7E+1	8.73E+7	5E-10	3.17E-8	2.4E-8	
I-131	3.9E+3	3.09E+9	5E-10	3.17E-8	1.9E-4	
Cs-137	6.1E+1	7.21E+10	5E-10	3.17E-8	7.0E-5	1.8E-3
Thyroid						
H-3	2.0E+8	2.37E+3	1E-7	3.17E-8	1.5E-3	
Co-58	2.0E+1	0				
Co-60	1.7E+1	0				
I-131	3.9E+3	9.94E-11	5E-10	3.17E-8	6.1E-1	
Cs-137	6.1E+1	0				6.1E-1

3.0 RADIOACTIVE GASEOUS EFFLUENTS

CONTROL 3.4 : DOSE - IODINE-131, 133. TRITIUM, AND RADIOACTIVE MATERIAL IN PARTICULATE FORM, (continued)

EXAMPLE CALCULATIONS : Determining Dose Due to Iodine, Tritium, and Particulates, (continued)

GRASS-COW-MILK PATHWAY						
Organ Radionuclide	**Q_{ik}**	**TG_{anip}**	**χ/Q or D/Q**	**3.17E-8**	**D_{ank}**	**Total Dose Sum of D_{ank} (mrem)**
Kidney						
H-3	2.0E+8	1.04E+3	1E-7	3.17E-8	6.6E-4	
Co-58	2.0E+1	0				
Co-60	1.7E+1	0				
I-131	3.9E+3	7.74E+8	5E-10	3.17E-8	4.8E-5	
Cs-137	6.1E+1	3.66E+9	5E-10	3.17E-8	3.5E-6	7.1E-4
Lung						
H-3	2.0E+8	2.37E+3	1E-7	3.17E-8	1.5E-3	
Co-58	2.0E+1	0				
Co-60	1.7E+1	0				
I-131	3.9E+3	0				
Cs-137	6.1E+1	8.69E+9	5E-10	3.17E-8	8.4E-6	1.5E-3
GI/LI						
H-3	2.0E+8	2.37E+3	1E-7	3.17E-8	1.5E-3	
Co-58	2.0E+1	6.6E+7				
Co-60	1.7E+3	2.16E+8				
I-131	3.9E+3	1.16E+8				
Cs-137	6.1E+1	1.86E+8	5E-10	3.17E-8	1.83E-7	1.5E-3

3.0 RADIOACTIVE GASEOUS EFFLUENTS

CONTROL 3.4 : DOSE - IODINE-131, 133. TRITIUM, AND RADIOACTIVE MATERIAL IN PARTICULATE FORM, (continued)

EXAMPLE CALCULATIONS : Determining Dose Due to Iodine, Tritium, and Particulates, (continued)

GRASS-COW-MILK PATHWAY						
Organ Radionuclide	**Q_{ik}**	**TG_{anip}**	**χ/Q or D/Q**	**3.17E-8**	**D_{ank}**	**Total Dose Sum of D_{ank} (mrem)**
Total Body						
H-3	2.0E+8	2.37E+3	1E-7	3.17E-8	1.5E-3	
Co-58	2.0E+1	6.24E+7				
Co-60	1.7E+3	2.09E+8				
I-131	3.8E+3	1.81E+9				
Cs-137	6.1E+1	4.14E+9	5E-7	3.17E-8	4.0E-6	1.5E-3
Skin						
H-3	2.0E+8	0			0	
Co-58	2.0E+1	0			0	
Co-60	1.7E+1	0			0	
I-131	3.9E+3	0			0	
Cs-137	6.1E+1	0			0	0

3.0 RADIOACTIVE GASEOUS EFFLUENTS

CONTROL 3.5 : GASEOUS RADWASTE TREATMENT SYSTEM

The VENTILATION EXHAUST TREATMENT SYSTEM and the GAS DECAY TANK SYSTEM shall be OPERABLE and appropriate portions of these systems shall be used to reduce releases of radioactivity when the projected doses in 31 days due to gaseous effluent releases, from each unit, to areas at and beyond the SITE BOUNDARY (see Figure 1.2-1) would exceed:

a. 0.2 mrad to air from gamma radiation, or

b. 0.4 mrad to air from beta radiation, or

c. 0.3 mrem to any organ of a MEMBER OF THE PUBLIC.

APPLICABILITY : At all times.

ACTION :

a. With radioactive gaseous waste being discharged without treatment and in excess of the above limits, prepare and submit to the Commission within 30 days, pursuant to Control 1.6.6, a Special Report that includes the following information:

   1. Identification of any inoperable equipment or subsystems, and the reason for the inoperability,

   2. Action(s) taken to restore the inoperable equipment to OPERABLE status, and

   3. Summary description of action(s) taken to prevent a recurrence.

b. The provisions of Administrative Control section 1.6.3 are not applicable.

SURVEILLANCE REQUIREMENTS

3.5.1 Doses due to gaseous releases from each unit to areas at and beyond the SITE BOUNDARY shall be projected at least once per 31 days in accordance with the methodology and parameters in the ODCM when Gaseous Radwaste Treatment Systems are not being fully utilized.

3.5.2 The installed VENTILATION EXHAUST TREATMENT SYSTEM and GAS DECAY TANK SYSTEM shall be considered OPERABLE by meeting Controls 3.2 and either 3.3 or 3.4.

3.0 RADIOACTIVE GASEOUS EFFLUENTS

CONTROL 3.5 : GASEOUS RADWASTE TREATMENT SYSTEM, (continued)

METHOD 3.5 : PROJECTED DOSE FOR GASEOUS EFFLUENTS

The monthly dose is normally projected by computing the dose accumulated during the most recent month and assuming the result represents the projected dose for the current month. The dose during the proceeding month will be computed as described in Methods 3.3.1, 3.3.2, and 3.4

Alternately, Control 3.5 is satisfied by extrapolating the dose to date during the current month to include the entire month. The dose to date is calculated as described in Methods 3.3.1, 3.3.2, and 3.4. This method may be used when a more accurate projection is required and sufficient data is available to make this determination.

The dose is projected with the relation :

$$P = \frac{31 \bullet D}{X} \qquad \text{Eqn 3.5-1}$$

where :

P = the projected dose during the month, (mrem)

31 = number of days in a calendar month, (days)

X = number of days in current month to date represented by available radioactive effluent sample, (days)

D = dose to date during current month calculated according to Methods 3.3.1, 3.3.2, and 3.4 (mrem), i.e., gamma, beta, or organ dose respectively.

3.0 RADIOACTIVE GASEOUS EFFLUENTS

BASIS 3.5: GASEOUS RADWASTE TREATMENT SYSTEM

This control applies to the release of radioactive materials in gaseous effluents from each unit at the site. For units with shared radwaste treatment systems, the gaseous effluents from the shared system are proportioned among the units sharing that system.

The OPERABILITY of the GAS DECAY TANK SYSTEM and the VENTILATION EXHAUST TREATMENT SYSTEM ensures that the systems will be available for use whenever gaseous effluents require treatment prior to release to the environment. The requirement that the appropriate portions of these systems be used, when specified, provides reasonable assurance that the releases of radioactive materials in gaseous effluents will be kept "as low as is reasonably achievable." This control implements the requirements of 10 CFR 50.36a, General Design Criterion 60 of Appendix A to 10 CFR Part 50 and the objectives given in Section II.D of Appendix I to 10 CFR Part 50. The specified limits governing the use of appropriate portions of the systems were specified as a suitable fraction of the dose objectives set forth in Appendix I, 10 CFR Part 50, for gaseous effluents.

APPENDIX 3A
REFERENCE METEOROLOGY

ANNUAL AVERAGE ATMOSPHERIC DISPERSION FACTORS

3.0 RADIOACTIVE GASEOUS EFFLUENTS

APPENDIX 3A

REFERENCE METEOROLOGY

ANNUAL AVERAGE ATMOSPHERIC DISPERSION FACTORS

Contents

Table	Description	Page
3A-1	Atmospheric Dispersion Factors (χ/Q)	3A - 1
3A-2	Deposition Depleted Atmospheric Dispersion Factors (χ_d/Q) (gaseous releases corrected for depletion from the plume by fallout and deposition)	3A - 3
3A-3	Relative Deposition Rate (D/Q) (fraction of airborne release which is deposited on a square meter area of land)	3A - 5

Source of Data :

"Revised Radiological Effluent Technical Specifications : Gaseous Effluent Dilution Factors", Dames & Moore, November, 1978.

The data were compiled from observations during 01/01/76 to 12/31/77

Number of Valid Observations	=	16538
Number of Invalid Observations	=	1006
Number of Calms - Lower Level	=	195
Number of Calms - Upper Level	=	383

The factors include Terrain/Recirculation corrections and assume mixed mode releases.

3.0 RADIOACTIVE GASEOUS EFFLUENTS

Table 3A - 1

REFERENCE METEOROLOGY - ANNUAL AVERAGE ATMOSPHERIC DISPERSION FACTORS

χ/ Q sec/ m^3

BASE DISTANCE IN MILES / KILOMETERS

Mi	.25	.75	.79	1.00	1.50	2.00	2.50	2.75
sector Km.	.40	1.21	1.27	1.61	2.41	3.22	4.02	4.42
NNE	8.9E-07	1.9E-07	1.8E-07	1.4E-07	8.3E-08	6.2E-08	5.0E-08	4.4E-08
NE	6.9E-07	1.5E-07	1.5E-07	1.1E-07	6.3E-08	4.8E-08	3.8E-08	3.5E-08
ENE	8.4E-07	1.4E-07	1.4E-07	1.0E-07	7.5E-08	5.2E-08	3.9E-08	3.6E-08
E	8.6E-07	1.9E-07	1.7E-07	1.3E-07	9.1E-08	6.3E-08	5.1E-08	4.6E-08
ESE	6.6E-07	1.5E-07	1.4E-07	1.2E-07	7.9E-08	5.7E-08	4.5E-08	4.0E-08
SE	1.6E-06	2.8E-07	2.7E-07	1.9E-07	1.1E-07	7.8E-08	6.1E-08	5.5E-08
SSE	4.9E-06	9.2E-07	8.7E-07	6.3E-07	3.6E-07	2.5E-07	1.8E-07	1.6E-07
S	2.9E-06	4.6E-07	4.2E-07	3.1E-07	1.8E-07	1.3E-07	1.0E-07	9.5E-08
SSW	6.5E-07	1.6E-07	1.5E-07	1.1E-07	6.5E-08	5.4E-08	4.6E-08	3.8E-08
SW	1.5E-06	3.2E-07	3.0E-07	2.3E-07	1.4E-07	1.0E-07	7.9E-08	6.9E-08
WSW	2.9E-06	6.3E-07	5.9E-07	4.3E-07	2.3E-07	1.7E-07	1.3E-07	1.0E-07
W	6.3E-06	1.3E-06	1.2E-06	9.0E-07	5.2E-07	3.5E-07	2.6E-07	2.3E-07
WNW	4.1E-06	8.7E-07	8.1E-07	5.9E-07	3.4E-07	2.3E-07	1.7E-07	1.6E-07
NW	2.7E-06	6.0E-07	5.6E-07	4.1E-07	2.4E-07	1.6E-07	1.2E-07	1.0E-07
NNW	1.4E-06	2.9E-07	2.7E-07	2.0E-07	1.2E-07	9.1E-08	6.8E-08	6.1E-08
N	9.5E-07	2.1E-07	1.9E-07	1.5E-07	8.5E-08	5.9E-08	4.5E-08	4.0E-08

3.0 RADIOACTIVE GASEOUS EFFLUENTS

Table 3A - 1

REFERENCE METEOROLOGY - ANNUAL AVERAGE ATMOSPHERIC DISPERSION FACTORS

χ /Q sec/ m^3

BASE DISTANCE IN MILES / KILOMETERS

Mi.	3.50	4.30	4.50	5.00	5.50	7.00	9.00	11.00
sector Km.	5.63	6.92	7.24	8.04	8.85	11.26	14.48	17.70
NNE	3.0E-08	2.3E-08	2.2E-08	2.0E-08	1.9E-08	1.4E-08	9.8E-09	6.6E-09
NE	2.5E-08	2.1E-08	2.1E-08	1.6E-08	1.3E-08	1.0E-08	7.3E-09	5.4E-09
ENE	2.8E-08	2.4E-08	2.3E-08	2.0E-08	1.8E-08	1.3E-08	1.1E-08	7.4E-09
E	3.6E-08	2.8E-08	2.7E-08	2.4E-08	2.2E-08	1.7E-08	1.3E-08	9.8E-09
ESE	2.9E-08	2.4E-08	2.3E-08	2.0E-08	1.9E-08	1.2E-08	1.1E-08	9.6E-09
SE	4.2E-08	3.1E-08	3.0E-08	2.7E-08	2.6E-08	2.1E-08	1.5E-08	1.3E-08
SSE	1.1E-07	9.4E-08	9.0E-08	7.9E-08	7.1E-08	4.9E-08	3.5E-08	2.7E-08
S	7.8E-08	5.8E-08	5.4E-08	5.0E-08	4.6E-08	3.3E-08	2.3E-08	1.8E-08
SSW	2.4E-08	2.5E-08	2.6E-08	2.1E-08	1.8E-08	1.4E-08	9.4E-09	7.1E-09
SW	4.9E-08	3.5E-08	3.2E-08	2.9E-08	2.7E-08	1.9E-08	1.4E-08	1.0E-08
WSW	7.6E-08	5.8E-08	5.5E-08	4.8E-08	4.2E-08	3.1E-08	2.2E-08	1.8E-08
W	1.7E-07	1.3E-07	1.2E-07	1.0E-07	9.2E-08	6.6E-08	4.5E-08	3.5E-08
WNW	1.2E-07	8.6E-08	8.1E-08	7.1E-08	6.3E-08	4.2E-08	2.9E-08	2.3E-08
NW	7.6E-08	5.6E-08	5.1E-08	4.7E-08	4.3E-08	3.2E-08	2.0E-08	1.5E-08
NNW	4.5E-08	3.2E-08	3.0E-08	2.6E-08	2.4E-08	1.5E-08	1.0E-08	8.3E-09
N	3.2E-08	2.3E-08	2.2E-08	2.0E-08	1.7E-08	1.3E-08	1.0E-08	7.2E-09

3.0 RADIOACTIVE GASEOUS EFFLUENTS

Table 3A - 2

REFERENCE METEOROLOGY - DEPOSITION DEPLETED ANNUAL AVERAGE ATMOSPHERIC DISPERSION FACTORS

χ_d/Q sec/ m^3

BASE DISTANCE IN MILES / KILOMETERS

Mi.	.25	.75	.79	1.00	1.50	2.00	2.50	2.75
sector Km.	.40	1.21	1.27	1.61	2.41	3.22	4.02	4.42
NNE	8.7E-07	1.7E-07	1.6E-07	1.2E-07	7.3E-08	5.5E-08	4.4E-08	3.8E-08
NE	6.9E-07	1.4E-07	1.3E-07	9.4E-08	5.5E-08	4.2E-08	3.3E-08	3.0E-08
ENE	8.0E-07	1.2E-07	1.2E-07	9.1E-08	6.5E-08	4.5E-08	3.4E-08	3.1E-08
E	8.6E-07	1.7E-07	1.5E-07	1.2E-07	7.6E-08	5.5E-08	4.4E-08	3.9E-08
ESE	6.1E-07	1.3E-07	1.3E-07	1.0E-07	6.9E-08	5.0E-08	3.9E-08	3.4E-08
SE	1.5E-06	2.6E-07	2.4E-07	1.7E-07	9.5E-08	6.7E-08	5.2E-08	4.7E-08
SSE	4.7E-06	8.2E-07	7.7E-07	5.6E-07	3.1E-07	2.2E-07	1.5E-07	1.3E-07
S	2.8E-06	4.2E-07	3.8E-07	2.7E-07	1.5E-07	1.1E-07	8.5E-08	7.8E-08
SSW	6.1E-07	1.4E-07	1.4E-07	9.6E-08	5.6E-08	4.7E-08	3.9E-08	3.2E-08
SW	1.3E-06	2.8E-07	2.7E-07	2.0E-07	1.3E-07	9.1E-08	6.7E-08	5.9E-08
WSW	2.7E-06	5.6E-07	5.2E-07	3.8E-07	2.1E-07	1.4E-07	1.0E-07	8.7E-08
W	5.9E-06	1.2E-06	1.1E-06	7.9E-07	4.4E-07	3.1E-07	2.2E-07	2.0E-07
WNW	3.8E-06	7.7E-07	7.3E-07	5.1E-07	2.9E-07	2.0E-07	1.5E-07	1.4E-07
NW	2.5E-06	5.4E-07	5.1E-07	3.6E-07	2.1E-07	1.4E-07	1.1E-07	8.9E-08
NNW	1.4E-06	2.6E-07	2.4E-07	1.8E-07	1.1E-07	7.7E-08	6.0E-08	5.4E-08
N	8.8E-07	1.9E-07	1.8E-07	1.3E-07	7.8E-08	5.2E-08	3.9E-08	3.5E-08

3.0 RADIOACTIVE GASEOUS EFFLUENTS

Table 3A - 2

REFERENCE METEOROLOGY - DEPOSITION DEPLETED ANNUAL AVERAGE ATMOSPHERIC DISPERSION FACTORS

χ_d/Q sec/ m^3

BASE DISTANCE IN MILES / KILOMETERS

Mi.	3.50	4.30	4.50	5.00	5.50	7.00	9.00	11.00
sector Km.	5.63	6.92	7.24	8.04	8.85	11.26	14.48	17.70
NNE	2.7E-08	2.1E-08	1.9E-08	1.8E-08	1.6E-08	1.2E-08	8.5E-09	6.0E-09
NE	2.2E-08	1.8E-08	1.7E-08	1.4E-08	1.2E-08	8.8E-09	6.3E-09	4.5E-09
ENE	2.4E-08	2.0E-08	2.0E-08	1.8E-08	1.6E-08	1.2E-08	9.0E-09	6.7E-09
E	3.1E-08	2.4E-08	2.4E-08	2.1E-08	1.9E-08	1.5E-08	1.1E-08	7.9E-09
ESE	2.5E-08	2.0E-08	2.0E-08	1.8E-08	1.6E-08	1.1E-08	8.8E-09	8.3E-09
SE	3.4E-08	2.6E-08	2.4E-08	2.3E-08	2.1E-08	1.7E-08	1.3E-08	1.0E-08
SSE	9.2E-08	7.7E-08	7.4E-08	6.4E-08	5.8E-08	3.8E-08	2.7E-08	2.1E-08
S	6.4E-08	4.8E-08	4.4E-08	4.1E-08	3.7E-08	2.6E-08	1.9E-08	1.3E-08
SSW	2.0E-08	2.2E-08	2.2E-08	1.8E-08	1.5E-08	1.2E-08	7.9E-09	5.7E-09
SW	4.2E-08	2.9E-08	2.7E-08	2.4E-08	2.3E-08	1.5E-08	1.1E-08	8.6E-09
WSW	6.4E-08	4.8E-08	4.6E-08	4.0E-08	3.5E-08	2.6E-08	1.8E-08	1.4E-08
W	1.4E-07	1.0E-07	9.9E-08	8.6E-08	7.6E-08	5.4E-08	3.7E-08	2.8E-08
WNW	9.8E-08	7.4E-08	7.0E-08	6.1E-08	5.4E-08	3.6E-08	2.5E-08	2.0E-08
NW	6.8E-08	5.0E-08	4.5E-08	4.1E-08	3.8E-08	2.8E-08	1.8E-08	1.3E-08
NNW	4.0E-08	2.8E-08	2.6E-08	2.3E-08	2.0E-08	1.3E-08	9.1E-09	6.9E-09
N	2.8E-08	2.0E-08	1.9E-08	1.7E-08	1.5E-08	1.1E-08	8.7E-09	6.3E-09

3.0 RADIOACTIVE GASEOUS EFFLUENTS

Table 3A - 3

REFERENCE METEOROLOGY - ANNUAL AVERAGED RELATIVE DEPOSITION RATE

D /Q 1/M^2

BASE DISTANCE IN MILES / KILOMETERS

Mi.	.25	.75	.79	1.00	1.50	2.00	2.50	2.75
sector Km.	.40	1.21	1.27	1.61	2.41	3.22	4.02	4.42
NNE	6.4E-09	1.5E-09	1.4E-09	9.6E-10	4.7E-10	2.8E-10	2.0E-10	1.6E-10
NE	3.5E-09	8.7E-10	8.1E-10	5.6E-10	2.8E-10	1.8E-10	1.2E-10	1.1E-10
ENE	2.8E-09	5.1E-10	5.0E-10	3.6E-10	2.1E-10	1.2E-10	7.6E-11	6.4E-11
E	2.7E-09	6.6E-10	5.9E-10	4.3E-10	2.4E-10	1.5E-10	1.1E-10	8.8E-11
ESE	1.6E-09	4.2E-10	4.1E-10	3.1E-10	1.9E-10	1.2E-10	7.7E-11	6.5E-11
SE	5.3E-09	1.2E-09	1.1E-09	7.1E-10	3.7E-10	2.3E-10	1.6E-10	1.3E-10
SSE	2.6E-08	5.2E-09	4.9E-09	3.4E-09	1.8E-09	1.1E-09	6.8E-10	5.8E-10
S	1.2E-08	2.1E-09	1.9E-09	1.4E-09	6.7E-10	4.4E-10	3.0E-10	2.7E-10
SSW	2.3E-09	7.2E-10	6.7E-10	4.5E-10	2.4E-10	1.7E-10	1.2E-10	9.7E-11
SW	1.1E-08	2.7E-09	2.5E-09	1.9E-09	1.0E-09	6.3E-10	4.3E-10	3.6E-10
WSW	2.3E-08	5.0E-09	4.6E-09	3.2E-09	1.5E-09	9.7E-10	6.1E-10	4.9E-10
W	5.7E-08	1.2E-08	1.1E-09	7.4E-09	3.5E-09	2.2E-09	1.4E-09	1.2E-09
WNW	4.1E-08	9.6E-09	8.7E-09	5.7E-09	2.7E-09	1.6E-09	1.0E-09	9.0E-10
NW	2.4E-08	6.2E-09	5.6E-09	3.7E-09	1.7E-09	9.5E-10	6.1E-10	5.0E-10
NNW	1.2E-08	3.0E-09	2.7E-09	1.8E-09	9.5E-10	5.4E-10	3.6E-10	3.0E-10
N	5.8E-09	1.6E-09	1.4E-09	1.0E-09	4.8E-10	2.7E-10	1.8E-10	1.5E-10

3.0 RADIOACTIVE GASEOUS EFFLUENTS

Table 3A - 3

REFERENCE METEOROLOGY - ANNUAL AVERAGED RELATIVE DEPOSITION RATE

D/Q $1/M^2$

BASE DISTANCE IN MILES / KILOMETERS

Mi.	3.50	4.30	4.50	5.00	5.50	7.00	9.00	11.00
sector Km.	5.63	6.92	7.24	8.04	8.85	11.26	14.48	17.70
NNE	9.1E-11	6.2E-11	5.5E-11	4.7E-11	4.1E-11	2.7E-11	1.6E-11	9.3E-12
NE	6.4E-11	4.6E-11	4.3E-11	3.2E-11	2.5E-11	1.7E-11	9.9E-12	6.2E-12
ENE	4.1E-11	3.0E-11	2.9E-11	2.3E-11	1.9E-11	1.2E-11	8.1E-12	5.2E-12
E	5.8E-11	3.9E-11	3.7E-11	3.0E-11	2.5E-11	1.6E-11	1.0E-11	6.6E-12
ESE	4.0E-11	2.8E-11	2.7E-11	2.2E-11	1.8E-11	1.0E-11	7.5E-12	5.8E-12
SE	9.0E-11	6.0E-11	5.4E-11	4.7E-11	4.2E-11	2.9E-11	1.8E-11	1.3E-11
SSE	3.5E-10	2.6E-10	2.5E-10	2.1E-10	1.8E-10	1.0E-10	6.6E-11	4.5E-11
S	2.0E-10	1.3E-10	1.2E-10	1.0E-10	9.1E-11	5.8E-11	3.4E-11	2.3E-11
SSW	5.3E-11	4.8E-11	4.8E-11	3.6E-11	2.8E-11	2.0E-11	1.0E-11	6.6E-12
SW	2.3E-10	1.4E-10	1.2E-10	1.1E-10	9.6E-11	5.5E-11	3.5E-11	2.2E-11
WSW	3.2E-10	2.2E-10	2.0E-10	1.6E-10	1.4E-10	8.5E-11	5.5E-11	3.8E-11
W	7.6E-10	5.0E-10	4.9E-10	3.9E-10	3.3E-10	2.1E-10	1.2E-10	8.7E-11
WNW	5.7E-10	3.8E-10	3.4E-10	2.8E-10	2.4E-10	1.4E-10	8.8E-11	6.1E-11
NW	3.1E-10	2.0E-10	1.8E-10	1.5E-10	1.3E-10	8.5E-11	4.5E-11	3.2E-11
NNW	2.0E-10	1.2E-10	1.1E-10	8.8E-11	7.5E-11	4.2E-11	2.5E-11	1.8E-11
N	9.6E-11	6.5E-11	5.8E-11	4.8E-11	4.0E-11	2.5E-11	1.7E-11	1.1E-11

APPENDIX 3B
PATHWAY-DOSE TRANSFER FACTORS

3.0 RADIOACTIVE GASEOUS EFFLUENTS

APPENDIX 3B

PATHWAY-DOSE TRANSFER FACTORS

Environmental pathway transfer factors, usage factors, and dose commitment factors appropriate for each exposure pathway, age, and organ are combined into integrated environmental concentration-to-dose factors for each radionuclide. This appendix includes tables of values of the transfer factors calculated in accord with equations and values recommended in NUREG-0133[1] for individual environmental pathways. In the event a single, composite transfer factor is desired for a given organ and age group, it can be obtained by summing the factors for appropriate pathways. Appropriate transfer factors from Appendix A are used in performing dose assessment calculations prescribed in the ODCM.

1. J. Boegli, et. al., eds., 1978, Preparation of Radiological Effluent Technical Specifications for Nuclear Power Plants, NUREG-0133, USNRC, Office of Nuclear Reactor Regulation.

3.0 RADIOACTIVE GASEOUS EFFLUENTS

ENVIRONMENTAL PATHWAY DOSE CONVERSION FACTORS FOR GASEOUS EFFLUENTS

PATHWAY - GROUND PLANE DEPOSITION								AGE GROUP - ADULT
NUCLIDE	ORGAN DOSE FACTORS (SQ.METER-MREM/YR PER UCI/SEC)							
	BONE	LIVER	THYROID	KIDNEY	LUNG	GI-LLI	SKIN	TOTAL BODY
H-3	0.	0.	0.	0.	0.	0.	0.	0.
C-14	0.	0.	0.	0.	0.	0.	0.	0.
P-32	0.	0.	0.	0.	0.	0.	0.	0.
CR-51	4.68E+06	4.68E+06	4.68E+06	4.68E+06	4.68E+06	4.68E+06	5.53E+06	4.68E+06
MN-54	1.38E+09	1.38E+09	1.38E+09	1.38E+09	1.38E+09	1.38E+09	1.62E+09	1.38E+09
FE-59	2.75E+08	2.75E+08	2.75E+08	2.75E+08	2.75E+08	2.75E+08	3.23E+08	2.75E+08
CO-57	1.89E+08	1.89E+08	1.89E+08	1.89E+08	1.89E+08	1.89E+08	2.08E+08	1.89E+08
CO-58	3.80E+08	3.80E+08	3.80E+08	3.80E+08	3.80E+08	3.80E+08	4.45E+08	3.80E+08
CO-60	2.15E+10	2.15E+10	2.15E+10	2.15E+10	2.15E+10	2.15E+10	2.52E+10	2.15E.10
NI-63	0.	0.	0.	0.	0.	0.	0.	0.
ZN-65	7.43E+08	7.43E+08	7.43E+08	7.43E+08	7.43E+08	7.43E+08	8.54E+08	7.43E+08
RB-86	9.01E+06	9.01E+06	9.01E+06	9.01E+06	9.01E+06	9.01E+06	1.03E+07	9.01E+06
SR-89	2.17E+04	2.17E+04	2.17E+04	2.17E+04	2.17E+04	2.17E+04	2.51E+04	2.17E+04
SR-90	5.35E+06	5.35E+06	5.35E+06	5.35E+06	5.35E+06	5.35E+06	6.33E+06	5.35E+06
Y-91	1.08E+06	1.08E+06	1.08E+06	1.08E+06	1.08E+06	1.08E+06	1.22E+06	1.08E+06
ZR-95	5.01E+08	5.01E+08	5.01E+08	5.01E+08	5.01E+08	5.01E+08	5.86E+08	5.01E+08
NB-95	1.36E+08	1.36E+08	1.36E+08	1.36E+08	1.36E+08	1.36E+08	1.61E+08	1.36E+08
RU-103	1.10E+08	1.10E+08	1.10E+08	1.10E+08	1.10E+08	1.10E+08	1.28E+08	1.10E+08
RU-106	4.19E+08	4.19E+08	4.19E+08	4.19E+08	4.19E+08	4.19E+08	5.03E+08	4.19E+08
AG-110M	3.58E+09	3.58E+09	3.58E+09	3.58E+09	3.58E+09	3.58E+09	4.17E+09	3.58E+09
CD-115M	0.	0.	0.	0.	0.	0.	0.	0.

BASED ON 1 μCi/SEC RELEASE RATE OF EACH ISOTOPE AND A VALUE OF 1 FOR χ/Q, χ_d/Q, AND D/Q.

3.0 RADIOACTIVE GASEOUS EFFLUENTS

ENVIRONMENTAL PATHWAY DOSE CONVERSION FACTORS FOR GASEOUS EFFLUENTS

PATHWAY - GROUND PLANE DEPOSITION
AGE GROUP - ADULT

NUCLIDE	ORGAN DOSE FACTORS (SQ.METER-MREM/YR PER UCI/SEC)							
	BONE	LIVER	THYROID	KIDNEY	LUNG	GI-LLI	SKIN	TOTAL BODY
SN-123	0.	0.	0.	0.	0.	0.	1.37E+06	0.
SN-126	5.16E+10	5.16E+10	5.16E+10	5.16E+10	5.16E+10	5.16E+10	5.76E+10	5.16E+10
SB-124	5.98E+08	5.98E+09	5.98E+08	5.98E+08	5.98E+08	5.98E+08	6.90E+08	5.98E+08
SB-125	2.30E+09	2.30E+09	2.30E+09	2.30E+09	2.30E+09	2.30E+09	2.59E+09	2.30E+09
TE-125M	1.55E+06	1.55E+06	1.55E+06	1.55E+06	1.55E+06	1.55E+06	2.13E+06	1.55E+06
TE-127M	8.79E+05	8.79E+05	8.79E+05	8.79E+05	8.79E+05	8.79E+05	9.74E+05	8.79E+05
TE-129M	3.85E+07	3.85E+07	3.85E+07	3.85E+07	3.85E+07	3.85E+07	4.52E+07	3.85E+07
I-130	5.53E+06	5.53E+06	5.53E+06	5.53E+06	5.53E+06	5.53E+06	6.71E+06	5.53E+06
I-131	1.72E+07	1.72E+07	1.72E+07	1.72E+07	1.72E+07	1.72E+07	2.09E+07	1.72E+07
I-132	1.25E+06	1.25E+06	1.25E+06	1.25E+06	1.25E+06	1.25E+06	1.47E+06	1.25E+06
I-133	2.48E+06	2.48E+06	2.48E+06	2.48E+06	2.48E+06	2.48E+06	3.01E+06	2.48E+06
I-134	4.50E+05	4.50E+05	4.50E+05	4.50E+05	4.50E+05	4.50E+05	5.35E+05	4.50E+05
I-135	2.56E+06	2.56E+06	2.56E+06	2.56E+06	2.56E+06	2.56E+06	2.99E+06	2.56E+06
CS-134	6.99E+09	6.99E+09	6.99E+09	6.99E+09	6.99E+09	6.99E+09	8.15E+09	6.99E+09
CS-136	1.49E+08	1.49E+08	1.49E+08	1.49E+08	1.49E+08	1.49E+08	1.69E+08	1.49E+08
CS-137	1.03E+10	1.03E+10	1.03E+10	1.03E+10	1.03E+10	1.03E+10	1.20E+10	1.03E+10
BA-140	1.68E+08	1.68E+08	1.68E+08	1.68E+08	1.68E+08	1.68E+08	1.90E+08	1.68E+08
CE-141	1.37E+07	1.37E+07	1.37E+07	1.37E+07	1.37E+07	1.37E+07	1.54E+07	1.37E+07
CE-144	1.13E+08	1.13E+08	1.13E+08	1.13E+08	1.13E+08	1.13E+08	1.31E+08	1.13E+08
PR-143	0.	0.	3.58E+09	0.	0.	0.	0.	0.
ND-147	8.48E+06	8.48E+06	8.48E+06	8.48E+06	8.48E+06	8.48E+06	1.02E+07	8.48E+06

BASED ON 1 μCi/SEC RELEASE RATE OF EACH ISOTOPE AND A VALUE OF 1 FOR χ/Q, χ_d/Q, AND D/Q.

3.0 RADIOACTIVE GASEOUS EFFLUENTS

ENVIRONMENTAL PATHWAY DOSE CONVERSION FACTORS FOR GASEOUS EFFLUENTS

PATHWAY - GROUND PLANE DEPOSITION								AGE GROUP - TEENAGER
NUCLIDE	ORGAN DOSE FACTORS (SQ.METER-MREM/YR PER UCI/SEC)							
	BONE	LIVER	THYROID	KIDNEY	LUNG	GI-LLI	SKIN	TOTAL BODY
H-3	0.	0.	0.	0.	0.	0.	0.	0.
C-14	0.	0.	0.	0.	0.	0.	0.	0.
P-32	0.	0.	0.	0.	0.	0.	0.	0.
CR-51	4.68E+06	4.68E+06	4.68E+06	4.68E+06	4.68E+06	4.68E+06	5.53E+06	4.68E+06
MN-54	1.38E+09	1.38E+09	1.38E+09	1.38E+09	1.38E+09	1.38E+09	1.62E+09	1.38E+09
FE-59	2.75E+08	2.75E+08	2.75E+08	2.75E+08	2.75E+08	2.75E+08	3.23E+08	2.75E+08
CO-57	1.89E+08	1.89E+08	1.89E+08	1.89E+08	1.89E+08	1.89E+08	2.08E+08	1.89E+08
CO-58	3.80E+08	3.80E+08	3.80E+08	3.80E+08	3.80E+08	3.80E+08	4.45E+08	3.80E+08
CO-60	2.15E+10	2.15E+10	2.15E+10	2.15E+10	2.15E+10	2.15E+10	2.52E+10	2.15E+10
NI-63	0.	0.	0.	0.	0.	0.	0.	0.
ZN-65	7.43E+08	7.43E+08	7.43E+08	7.43E+08	7.43E+08	7.43E+08	8.54E+08	7.43E+08
RB-86	9.01E+06	9.01E+06	9.01E+06	9.01E+06	9.01E+06	9.01E+06	1.03E+07	9.01E+06
SR-89	2.17E+04	2.17E+04	2.17E+04	2.17E+04	2.17E+04	2.17E+04	2.51E+04	2.17E+04
SR-90	5.35E+06	5.35E+06	5.35E+06	5.35E+06	5.35E+06	5.35E+06	6.33E+06	5.35E+06
Y-91	1.08E+06	1.08E+06	1.08E+06	1.08E+06	1.08E+06	1.08E+06	1.22E+06	1.08E+06
ZR-95	5.01E+08	5.01E+08	5.01E+08	5.01E+08	5.01E+08	5.01E+08	5.86E+08	5.01E+08
NB-95	1.36E+08	1.36E+08	1.36E+08	1.36E+08	1.36E+08	1.36E+08	1.61E+08	1.36E+08
RU-103	1.10E+08	1.10E+08	1.10E+08	1.10E+08	1.10E+08	1.10E+08	1.28E+08	1.10E+08
RU-106	4.19E+08	4.19E+08	4.19E+08	4.19E+08	4.19E+08	4.19E+08	5.03E+08	4.19E+08
AG-110M	3.58E+09	3.58E+09	3.58E+09	3.58E+09	3.58E+09	3.58E+09	4.17E+09	3.58E+09
CD-115M	0.	0.	0.	0.	0.	0.	0.	0.

BASED ON 1 μCi/SEC RELEASE RATE OF EACH ISOTOPE AND A VALUE OF 1 FOR χ/Q, χ_d/Q, AND D/Q.

3.0 RADIOACTIVE GASEOUS EFFLUENTS

ENVIRONMENTAL PATHWAY DOSE CONVERSION FACTORS FOR GASEOUS EFFLUENTS

PATHWAY - GROUND PLANE DEPOSITION								AGE GROUP - TEENAGER
NUCLIDE	ORGAN DOSE FACTORS (SQ.METER-MREM/YR PER UCI/SEC)							
	BONE	LIVER	THYROID	KIDNEY	LUNG	GI-LLI	SKIN	TOTAL BODY
SN-123	0.	0.	0.	0.	0.	0.	1.37E+06	0.
SN-126	5.16E+10	5.16E+10	5.16E+10	5.16E+10	5.16E+10	5.16E+10	5.76E+10	5.16E+10
SB-124	5.98E+08	5.98E+08	5.98E+08	5.98E+08	5.98E+08	5.98E+08	6.90E+08	5.98E+08
SB-125	2.30E+09	2.30E+09	2.30E+09	2.30E+09	2.30E+09	2.30E+09	2.59E+09	2.30E+09
TE-125M	1.55E+06	1.55E+06	1.55E+06	1.55E+06	1.55E+06	1.55E+06	2.13E+06	1.55E+06
TE-127M	8.79E+05	8.79E+05	8.79E+05	8.79E+05	8.79E+05	8.79E+05	9.74E+05	8.79E+05
TE-129M	3.85E+07	3.85E+07	3.85E+07	3.85E+07	3.85E+07	3.85E+07	4.52E+07	3.85E+07
I-130	5.53E+06	5.53E+06	5.53E+06	5.53E+06	5.53E+06	5.53E+06	6.71E+06	5.53E+06
I-131	1.72E+07	1.72E+07	1.72E+07	1.72E+07	1.72E+07	1.72E+07	2.09E+07	1.72E+07
I-132	1.25E+06	1.25E+06	1.25E+06	1.25E+06	1.25E+06	1.25E+06	1.47E+06	1.25E+06
I-133	2.48E+06	2.48E+06	2.48E+06	2.48E+06	2.48E+06	2.48E+06	3.01E+06	2.48E+06
I-134	4.50E+05	4.50E+05	4.50E+05	4.50E+05	4.50E+05	4.50E+05	5.35E+05	4.50E+05
I-135	2.56E+06	2.56E+06	2.56E+06	2.56E+06	2.56E+06	2.56E+06	2.99E+06	2.56E+06
CS-134	6.99E+09	6.99E+09	6.99E+09	6.99E+09	6.99E+09	6.99E+09	8.15E+09	6.99E+09
CS-136	1.49E+08	1.49E+08	1.49E+08	1.49E+08	1.49E+08	1.49E+08	1.69E+08	1.49E+08
CS-137	1.03E+10	1.03E+10	1.03E+10	1.03E+10	1.03E+10	1.03E+10	1.20E+10	1.03E+10
BA-140	1.68E+08	1.68E+08	1.68E+08	1.68E+08	1.68E+08	1.68E+08	1.90E+08	1.68E+08
CE-141	1.37E+07	1.37E+07	1.37E+07	1.37E+07	1.37E+07	1.37E+07	1.54E+07	1.37E+07
CE-144	1.13E+08	1.13E+08	1.13E+08	1.13E+08	1.13E+08	1.13E+08	1.31E+08	1.13E+08
PR-143	0.	0.	0.	0.	0.	0.	0.	0.
ND-147	8.48E+06	8.48E+06	8.48E+06	8.48E+06	8.48E+06	8.48E+06	1.02E+07	8.48E+06

BASED ON 1 μCi/SEC RELEASE RATE OF EACH ISOTOPE AND A VALUE OF 1 FOR χ/Q, χ_d/Q, AND D/Q.

3.0 RADIOACTIVE GASEOUS EFFLUENTS

ENVIRONMENTAL PATHWAY DOSE CONVERSION FACTORS FOR GASEOUS EFFLUENTS

PATHWAY - GROUND PLANE DEPOSITION								AGE GROUP - CHILD
NUCLIDE	ORGAN DOSE FACTORS (SQ.METER-MREM/YR PER UCI/SEC)							
	BONE	LIVER	THYROID	KIDNEY	LUNG	GI-LLI	SKIN	TOTAL BODY
H-3	0.	0.	0.	0.	0.	0.	0.	0.
C-14	0.	0.	0.	0.	0.	0.	0.	0.
P-32	0.	0.	0.	0.	0.	0.	0.	0.
CR-51	4.68E+06	4.68E+06	4.68E+06	4.68E+06	4.68E+06	4.68E+06	5.53E+06	4.68E+06
MN-54	1.38E+09	1.38E+09	1.38E+09	1.38E+09	1.38E+09	1.38E+09	1.62E+09	1.38E+09
FE-59	2.75E+08	2.75E+08	2.75E+08	2.75E+08	2.75E+08	2.75E+08	3.23E+08	2.75E+08
CO-57	1.89E+08	1.89E+08	1.89E+08	1.89E+08	1.89E+08	1.89E+08	2.08E+08	1.89E+08
CO-58	3.80E+08	3.80E+08	3.80E+08	3.80E+08	3.80E+08	3.80E+08	4.45E+08	3.80E+08
CO-60	2.15E+10	2.15E+10	2.15E+10	2.15E+10	2.15E+10	2.15E+10	2.52E+10	2.15E+10
NI-63	0.	0.	0.	0.	0.	0.	0.	0.
ZN-65	7.43E+08	7.43E+08	7.43E+08	7.43E+08	7.43E+08	7.43E+08	8.54E+08	7.43E+08
RB-86	9.01E+06	9.01E+06	9.01E+06	9.01E+06	9.01E+06	9.01E+06	1.03E+07	9.01E+06
SR-89	2.17E+04	2.17E+04	2.17E+04	2.17E+04	2.17E+04	2.17E+04	2.51E+04	2.17E+04
SR-90	5.35E+06	5.35E+06	5.35E+06	5.35E+06	5.35E+06	5.35E+06	6.33E+06	5.35E+06
Y-91	1.08E+06	1.08E+06	1.08E+06	1.08E+06	1.08E+06	1.08E+06	1.22E+06	1.08E+06
ZR-95	5.01E+08	5.01E+08	5.01E+08	5.01E+08	5.01E+08	5.01E+08	5.86E+08	5.01E+08
NB-95	1.36E+08	1.36E+08	1.36E+08	1.36E+08	1.36E+08	1.36E+08	1.61E+08	1.36E+08
RU-103	1.10E+08	1.10E+08	1.10E+08	1.10E+08	1.10E+08	1.10E+08	1.28E+08	1.10E+08
RU-106	4.19E+08	4.19E+08	4.19E+08	4.19E+08	4.19E+08	4.19E+08	5.03E+08	4.19E+08
AG-110M	3.58E+09	3.58E+09	3.58E+09	3.58E+09	3.58E+09	3.58E+09	4.17E+09	3.58E+09
CD-115M	0.	0.	0.	0.	0.	0.	0.	0.

BASED ON 1 μCi/SEC RELEASE RATE OF EACH ISOTOPE AND A VALUE OF 1 FOR χ/Q, χ_d/Q, AND D/Q.

3.0 RADIOACTIVE GASEOUS EFFLUENTS

ENVIRONMENTAL PATHWAY DOSE CONVERSION FACTORS FOR GASEOUS EFFLUENTS

PATHWAY - GROUND PLANE DEPOSITION								AGE GROUP - CHILD
NUCLIDE	ORGAN DOSE FACTORS (SQ.METER-MREM/YR PER UCI/SEC)							
	BONE	LIVER	THYROID	KIDNEY	LUNG	GI-LLI	SKIN	TOTAL BODY
SN-123	0.	0.	0.	0.	0.	0.	1.37E+06	0.
SN-126	5.16E+10	5.16E+10	5.16E+10	5.16E+10	5.16E+10	5.16E+10	5.76E+10	5.16E+10
SB-124	5.98E+08	5.98E+08	5.98E+08	5.98E+08	5.98E+08	5.98E+08	6.90E+08	5.98E+08
SB-125	2.30E+09	2.30E+09	2.30E+09	2.30E+09	2.30E+09	2.30E+09	2.59E+09	2.30E+09
TE-125M	1.55E+06	1.55E+06	1.55E+06	1.55E+06	1.55E+06	1.55E+06	2.13E+06	1.55E+06
TE-127M	8.79E+05	8.79E+05	8.79E+05	8.79E+05	8.79E+05	8.79E+05	9.74E+05	8.79E+05
TE-129M	3.85E+07	3.85E+07	3.85E+07	3.85E+07	3.85E+07	3.85E+07	4.52E+07	3.85E+07
I-130	5.53E+06	5.53E+06	5.53E+06	5.53E+06	5.53E+06	5.53E+06	6.71E+06	5.53E+06
I-131	1.72E+07	1.72E+07	1.72E+07	1.72E+07	1.72E+07	1.72E+07	2.09E+07	1.72E+07
I-132	1.25E+06	1.25E+06	1.25E+06	1.25E+06	1.25E+06	1.25E+06	1.47E+06	1.25E+06
I-133	2.48E+06	2.48E+06	2.48E+06	2.48E+06	2.48E+06	2.48E+06	3.01E+06	2.48E+06
I-134	4.50E+05	4.50E+05	4.50E+05	4.50E+05	4.50E+05	4.50E+05	5.35E+05	4.50E+05
I-135	2.56E+06	2.56E+06	2.56E+06	2.56E+06	2.56E+06	2.56E+06	2.99E+06	2.56E+06
CS-134	6.99E+09	6.99E+09	6.99E+09	6.99E+09	6.99E+09	6.99E+09	8.15E+09	6.99E+09
CS-136	1.49E+08	1.49E+08	1.49E+08	1.49E+08	1.49E+08	1.49E+08	1.69E+08	1.49E+08
CS-137	1.03E+10	1.03E+10	1.03E+10	1.03E+10	1.03E+10	1.03E+10	1.20E+10	1.03E+10
BA-140	1.68E+08	1.68E+08	1.68E+08	1.68E+08	1.68E+08	1.68E+08	1.90E+08	1.68E+08
CE-141	1.37E+07	1.37E+07	1.37E+07	1.37E+07	1.37E+07	1.37E+07	1.54E+07	1.37E+07
CE-144	1.13E+08	1.13E+08	1.13E+08	1.13E+08	1.13E+08	1.13E+08	1.31E+08	1.13E+08
PR-143	0.	0.	0.	0.	0.	0.	0.	0.
ND-147	8.48E+06	8.48E+06	8.48E+06	8.48E+06	8.48E+06	8.48E+06	1.02E+07	8.48E+06

BASED ON 1 μCi/SEC RELEASE RATE OF EACH ISOTOPE AND A VALUE OF 1 FOR χ/Q, χ_d/Q, AND D/Q.

3.0 RADIOACTIVE GASEOUS EFFLUENTS

ENVIRONMENTAL PATHWAY DOSE CONVERSION FACTORS FOR GASEOUS EFFLUENTS

PATHWAY - GROUND PLANE DEPOSITION								AGE GROUP - INFANT
NUCLIDE	ORGAN DOSE FACTORS (SQ.METER-MREM/YR PER UCI/SEC)							
	BONE	LIVER	THYROID	KIDNEY	LUNG	GI-LLI	SKIN	TOTAL BODY
H-3	0.	0.	0.	0.	0.	0.	0.	0.
C-14	0.	0.	0.	0.	0.	0.	0.	0.
P-32	0.	0.	0.	0.	0.	0.	0.	0.
CR-51	4.68E+06	4.68E+06	4.68E+06	4.68E+06	4.68E+06	4.68E+06	5.53E+06	4.68E+06
MN-54	1.38E+09	1.38E+09	1.38E+09	1.38E+09	1.38E+09	1.38E+09	1.62E+09	1.38E+09
FE-59	2.75E+08	2.75E+08	2.75E+08	2.75E+08	2.75E+08	2.75E+08	3.23E+08	2.75E+08
CO-57	1.89E+08	1.89E+08	1.89E+08	1.89E+08	1.89E+08	1.89E+08	2.08E+08	1.89E+08
CO-58	3.80E+08	3.80E+08	3.80E+08	3.80E+08	3.80E+08	3.80E+08	4.45E+08	3.80E+08
CO-60	2.15E+10	2.15E+10	2.15E+10	2.15E+10	2.15E+10	2.15E+10	2.52E+10	2.15E+10
NI-63	0.	0.	0.	0.	0.	0.	0.	0.
ZN-65	7.43E+08	7.43E+08	7.43E+08	7.43E+08	7.43E+08	7.43E+08	8.54E+08	7.43E+08
RB-86	9.01E+06	9.01E+06	9.01E+06	9.01E+06	9.01E+06	9.01E+06	1.03E+07	9.01E+06
SR-89	2.17E+04	2.17E+04	2.17E+04	2.17E+04	2.17E+04	2.17E+04	2.51E+04	2.17E+04
SR-90	5.35E+06	5.35E+06	5.35E+06	5.35E+06	5.35E+06	5.35E+06	6.33E+06	5.35E+06
Y-91	1.08E+06	1.08E+06	1.08E+06	1.08E+06	1.08E+06	1.08E+06	1.22E+06	1.08E+06
ZR-95	5.01E+08	5.01E+08	5.01E+08	5.01E+08	5.01E+08	5.01E+08	5.86E+08	5.01E+08
NB-95	1.36E+08	1.36E+08	1.36E+08	1.36E+08	1.36E+08	1.36E+08	1.61E+08	1.36E+08
RU-103	1.10E+08	1.10E+08	1.10E+08	1.10E+08	1.10E+08	1.10E+08	1.28E+08	1.10E+08
RU-106	4.19E+08	4.19E+08	4.19E+08	4.19E+08	4.19E+08	4.19E+08	5.03E+08	4.19E+08
AG-110M	3.58E+09	3.58E+09	3.58E+09	3.58E+09	3.58E+09	3.58E+09	4.17E+09	3.58E+09
CD-115M	0.	0.	0.	0.	0.	0.	0.	0.

BASED ON 1 μCi/SEC RELEASE RATE OF EACH ISOTOPE AND A VALUE OF 1 FOR χ/Q, χ_d/Q, AND D/Q.

3.0 RADIOACTIVE GASEOUS EFFLUENTS

ENVIRONMENTAL PATHWAY DOSE CONVERSION FACTORS FOR GASEOUS EFFLUENTS

PATHWAY - GROUND PLANE DEPOSITION								AGE GROUP - INFANT
NUCLIDE	ORGAN DOSE FACTORS (SQ.METER-MREM/YR PER UCI/SEC)							
	BONE	LIVER	THYROID	KIDNEY	LUNG	GI-LLI	SKIN	TOTAL BODY
SN-123	0.	0.	0.	0.	0.	0.	1.37E+06	0.
SN-126	5.16E+10	5.16E+10	5.16E+10	5.16E+10	5.16E+10	5.16E+10	5.76E+10	5.16E+10
SB-124	5.98E+08	5.98E+08	5.98E+08	5.98E+08	5.98E+08	5.98E+08	6.90E+08	5.98E+08
SB-125	2.30E+09	2.30E+09	2.30E+09	2.30E+09	2.30E+09	2.30E+09	2.59E+09	2.30E+09
TE-125M	1.55E+06	1.55E+06	1.55E+06	1.55E+06	1.55E+06	1.55E+06	2.13E+06	1.55E+06
TE-127M	8.79E+05	8.79E+05	8.79E+05	8.79E+05	8.79E+05	8.79E+05	9.74E+05	8.79E+05
TE-129M	3.85E+07	3.85E+07	3.85E+07	3.85E+07	3.85E+07	3.85E+07	4.52E+07	3.85E+07
I-130	5.53E+06	5.53E+06	5.53E+06	5.53E+06	5.53E+06	5.53E+06	6.71E+06	5.53E+06
I-131	1.72E+07	1.72E+07	1.72E+07	1.72E+07	1.72E+07	1.72E+07	2.09E+07	1.72E+07
I-132	1.25E+06	1.25E+06	1.25E+06	1.25E+06	1.25E+06	1.25E+06	1.47E+06	1.25E+06
I-133	2.48E+06	2.48E+06	2.48E+06	2.48E+06	2.48E+06	2.48E+06	3.01E+06	2.48E+06
I-134	4.50E+05	4.50E+05	4.50E+05	4.50E+05	4.50E+05	4.50E+05	5.35E+05	4.50E+05
I-135	2.56E+06	2.56E+06	2.56E+06	2.56E+06	2.56E+06	2.56E+06	2.99E+06	2.56E+06
CS-134	6.99E+09	6.99E+09	6.99E+09	6.99E+09	6.99E+09	6.99E+09	8.15E+09	6.99E+09
CS-136	1.49E+08	1.49E+08	1.49E+08	1.49E+08	1.49E+08	1.49E+08	1.69E+08	1.49E+08
CS-137	1.03E+10	1.03E+10	1.03E+10	1.03E+10	1.03E+10	1.03E+10	1.20E+10	1.03E+10
BA-140	1.68E+08	1.68E+08	1.68E+08	1.68E+08	1.68E+08	1.68E+08	1.90E+08	1.68E+08
CE-141	1.37E+07	1.37E+07	1.37E+07	1.37E+07	1.37E+07	1.37E+07	1.54E+07	1.37E+07
CE-144	1.13E+08	1.13E+08	1.13E+08	1.13E+08	1.13E+08	1.13E+08	1.31E+08	1.13E+08
PR-143	0.	0.	0.	0.	0.	0.	0.	0.
ND-147	8.48E+06	8.48E+06	8.48E+06	8.48E+06	8.48E+06	8.48E+06	1.02E+07	8.48E+06

BASED ON 1 μCi/SEC RELEASE RATE OF EACH ISOTOPE AND A VALUE OF 1 FOR χ/Q, χ_d/Q, AND D/Q.

3.0 RADIOACTIVE GASEOUS EFFLUENTS

ENVIRONMENTAL PATHWAY DOSE CONVERSION FACTORS FOR GASEOUS EFFLUENTS

PATHWAY - INHALATION								AGE GROUP - ADULT
NUCLIDE	ORGAN DOSE FACTORS (MREM/YR PER UCI/CU.METER)							
	BONE	LIVER	THYROID	KIDNEY	LUNG	GI-LLI	SKIN	TOTAL BODY
H-3	0.	1.07E+03	1.07E+03	1.07E+03	1.07E+03	1.07E+03	0.	1.07E+03
C-14	1.82E+04	3.42E+04	3.42E+03	3.42E+03	3.42E+03	3.42E+03	0.	3.42E+03
P-32	1.32E+06	7.72E+04	0.	0.	0.	8.64E+04	0.	5.02E+04
CR-51	0.	0.	5.95E+01	2.28E+01	1.44E+04	3.32E+03	0.	1.00E+02
MN-54	0.	3.96E+04	0.	9.84E+03	1.40E+06	7.74E+04	0.	6.30E+03
FE-59	1.18E+04	2.78E+07	0.	0.	1.02E+06	1.88E+05	0.	1.06E+04
CO-57	0.	6.92E+02	0.	0.	3.70E+05	3.14E+04	0.	6.71E+02
CO-58	0.	1.58E+03	0.	0.	9.28E+05	1.06E+05	0.	2.07E+03
CO-60	0.	1.15E+04	0.	0.	5.98E+06	2.85E+05	0.	1.48E+04
NI-63	4.32E+05	3.14E+04	0.	0.	1.78E+05	1.34E+04	0.	1.45E+04
ZN-65	3.24E+04	1.03E+05	0.	6.90E+04	8.72E+05	5.34E+04	0.	4.66E+04
RB-86	0.	1.35E+05	0.	0.	0.	1.66E+04	0.	5.90E+04
SR-89	3.04E+05	0.	0.	0.	1.40E+06	3.50E+05	0.	8.72E+03
SR-90	9.92E+07	0.	0.	0.	9.60E+06	7.22E+05	0.	6.10E+06
Y-91	4.62E+05	0.	0.	0.	1.70E+06	3.85E+05	0.	1.24E+04
ZR-95	1.07E+05	3.44E+04	0.	5.42E+04	1.78E+06	1.50E+05	0.	2.33E+04
NB-95	1.41E+04	7.82E+03	0.	7.74E+03	5.06E+05	1.04E+05	0.	4.21E+03
RU-103	1.58E+03	0.	0.	5.83E+03	5.06E+05	1.10E+05	0.	6.58E+02
RU-106	6.91E+04	0.	0.	1.34E+05	9.44E+06	9.12E+05	0.	8.72E+03
AG-110M	1.08E+04	1.00E+04	0.	1.97E+04	4.64E+06	3.02E+05	0.	5.94E+03
CD-115M	0.	1.97E+05	0.	1.50E+05	1.41E+06	3.84E+05	0.	6.36E+03

BASED ON 1 μCi/SEC RELEASE RATE OF EACH ISOTOPE AND A VALUE OF 1 FOR χ/Q AND χ_d/Q

3.0 RADIOACTIVE GASEOUS EFFLUENTS

ENVIRONMENTAL PATHWAY DOSE CONVERSION FACTORS FOR GASEOUS EFFLUENTS

PATHWAY - INHALATION								AGE GROUP - ADULT
NUCLIDE	ORGAN DOSE FACTORS (MREM/YR PER UCI/CU.METER)							
	BONE	LIVER	THYROID	KIDNEY	LUNG	GI-LLI	SKIN	TOTAL BODY
SN-123	2.42E+05	5.33E+03	4.53E+03	0.	2.30E+06	3.14E+05	0.	7.86E+03
SN-126	1.26E+06	3.34E+04	9.84E+03	0.	9.36E+06	1.27E+05	0.	4.80E+04
SB-124	3.12E+04	5.89E+02	7.55E+01	0.	2.48E+06	4.06E+05	0.	1.24E+04
SB-125	6.61E+04	7.13E+02	5.87E+01	0.	2.20E+06	1.01E+05	0.	1.33E+04
TE-125M	3.42E+03	1.58E+03	1.05E+03	1.24E+04	3.14E+05	7.06E+04	0.	4.67E+02
TE-127M	1.26E+04	5.62E+03	3.29E+03	4.58E+04	9.60E+05	1.50E+05	0.	1.57E+03
TE-129M	9.76E+03	4.67E+03	3.44E+03	3.66E+04	1.16E+06	3.83E+05	0.	1.58E+03
I-130	4.58E+03	1.34E+04	1.74E+06	2.09E+04	0.	7.69E+03	0.	5.29E+03
I-131	2.52E+04	3.58E+04	1.19E+07	6.14E+04	0.	6.28E+03	0.	2.05E+04
I-132	1.16E+03	3.26E+03	4.38E+05	5.19E+03	0.	4.06E+02	0.	1.16E+03
I-133	8.64E+03	1.49E+04	2.93E+06	2.60E+04	0.	8.72E+03	0.	4.54E+03
I-134	6.45E+02	1.73E+03	2.30E+05	2.75E+03	0.	1.01E+00	0.	6.16E+02
I-135	2.89E+03	6.99E+03	9.36E+05	1.11E+04	0.	5.25E+03	0.	2.58E+03
CS-134	3.74E+05	8.48E+05	0.	2.88E+05	9.76E+04	1.04E+04	0.	7.29E+05
CS-136	3.91E+04	1.46E+05	0.	8.56E+04	1.20E+04	1.17E+04	0.	1.11E+05
CS-137	4.78E+05	6.22E+05	0.	2.22E+05	7.53E+04	8.40E+03	0.	4.29E+05
BA-140	3.90E+04	4.90E+01	0.	1.67E+01	1.27E+06	2.18E+05	0.	2.57E+03
CE-141	1.99E+04	1.35E+04	0.	6.26E+03	3.62E+05	1.20E+05	0.	1.53E+03
CE-144	3.43E+06	1.43E+06	0.	8.48E+05	7.78E+06	8.16E+05	0.	1.84E+05
PR-143	9.36E+03	3.75E+03	0.	2.16E+03	2.81E+05	2.00E+05	0.	4.63E+02
ND-147	5.27E+03	6.10E+03	0.	3.56E+03	2.21E+05	1.73E+05	0.	3.65E+02

BASED ON 1 μCi/SEC RELEASE RATE OF EACH ISOTOPE AND A VALUE OF 1 FOR χ/Q AND χ_d/Q

3.0 RADIOACTIVE GASEOUS EFFLUENTS

ENVIRONMENTAL PATHWAY DOSE CONVERSION FACTORS FOR GASEOUS EFFLUENTS

PATHWAY - INHALATION AGE GROUP - TEENAGER								
NUCLIDE	ORGAN DOSE FACTORS (MREM/YR PER UCI/CU.METER)							
	BONE	LIVER	THYROID	KIDNEY	LUNG	GI-LLI	SKIN	TOTAL BODY
H-3	0.	8.48E+02	8.48E+02	1.07E+03	8.48E+02	8.48E+02	0.	8.48E+02
C-14	4.58E+03	4.53E+03	4.53E+03	3.42E+03	4.53E+03	4.58E+03	0.	4.53E+03
P-32	1.32E+06	7.72E+04	0.	0.	0.	8.64E+04	0.	5.02E+04
CR-51	0.	0.	5.95E+01	2.28E+01	1.44E+04	3.32E+03	0.	1.00E+02
MN-54	0.	3.96E+04	0.	9.84E+03	1.40E+06	7.74E+04	0.	6.30E+03
FE-59	1.18E+04	2.78E+07	0.	0.	1.02E+06	1.88E+05	0.	1.06E+04
CO-57	0.	6.92E+02	0.	0.	3.70E+05	3.14E+04	0.	6.71E+02
CO-58	0.	1.76E+02	0.	0.	1.37E+06	9.52E+04	0.	2.34E.02
CO-60	0.	1.24E+03	0.	0.	8.56E+06	2.35E+05	0.	1.65E+34
NI-63	4.32E+05	3.14E+04	0.	0.	1.78E+05	1.34E+04	0.	1.45E+04
ZN-65	3.24E+04	1.03E+05	0.	6.90E+04	8.72E+05	5.34E+04	0.	4.66E+04
RB-86	0.	1.35E+05	0.	0.	0.	1.66E+04	0.	5.90E+04
SR-89	3.37E+04	0.	0.	0.	2.50E+06	3.54E+05	0.	1.11E+03
SR-90	1.18E+07	0.	0.	0.	1.66E+07	7.24E+05	0.	7.23E+05
Y-91	5.38E+04	0.	0.	0.	2.86E+06	3.74E+05	0.	1.44E+03
ZR-95	1.09E+04	3.663+03	0.	5.42E+04	2.56E+06	1.33E+05	0.	2.54E+03
NB-95	1.36E+03	8.24E+02	0.	7.74E+03	7.17E+05	8.80E+04	0.	4.62E+02
RU-103	1.63E+02	0.	0.	5.83E+03	7.51E+05	9.44E+04	0.	7.32E+01
RU-106	8.40E+03	0.	0.	1.34E+05	1.64E+07	9.28E+05	0.	1.06E+03
AG-110M	1.08E+04	1.00E+04	0.	1.97E+04	4.64E+06	3.02E+05	0.	5.94E+03
CD-115M	0.	1.97E+05	0.	1.58E+05	1.41E+06	3.84E+05	0.	6.36E+03

BASED ON 1 μCi/SEC RELEASE RATE OF EACH ISOTOPE AND A VALUE OF 1 FOR χ/Q AND χ_d/Q.

3.0 RADIOACTIVE GASEOUS EFFLUENTS

ENVIRONMENTAL PATHWAY DOSE CONVERSION FACTORS FOR GASEOUS EFFLUENTS

PATHWAY - INHALATION								AGE GROUP - TEENAGER
NUCLIDE	ORGAN DOSE FACTORS (MREM/YR PER UCI/CU.METER)							
	BONE	LIVER	THYROID	KIDNEY	LUNG	GI-LLI	SKIN	TOTAL BODY
SN-123	2.79E+04	6.14E+02	4.92E+02	0.	3.91E+06	3.13E+05	0.	9.20E+02
SN-126	1.26E+06	3.34E+04	9.84E+03	0.	9.36E+06	1.27E+05	0.	4.80E+04
SB-124	3.12E+04	5.89E+02	7.55E+01	0.	2.48E+06	4.06E+05	0.	1.24E+04
SB-125	6.61E+04	7.13E+02	5.87E+01	0.	2.20E+06	1.01E+05	0.	1.33E+04
TE-125M	4.07E+02	1.86E+02	1.17E+02	1.24E+04	5.36E+05	7.08E+04	0.	5.53E+01
TE-127M	1.26E+04	5.62E+03	3.29E+03	4.58E+04	9.60E+05	1.50E+05	0.	1.57E+03
TE-129M	1.19E+03	5.64E+02	3.90E+02	3.66E+04	2.03E+06	3.84E+05	0.	1.92E+02
I-130	4.58E+03	1.34E+04	1.74E+06	2.09E+04	0.	7.69E+03	0.	5.29E+03
I-131	3.37E+04	4.72E+04	1.39E+07	6.14E+04	0.	5.96E+03	0.	2.82E+04
I-132	1.16E+03	3.26E+03	4.38E+05	5.19E+03	0.	4.06E+02	0.	1.16E+03
I-133	1.23E+04	2.06E+04	3.83E+06	2.60E+04	0.	1.00E+04	0.	6.34E+03
I-134	6.45E+03	1.73E+03	2.30E+05	2.75E+03	0.	1.01E+00	0.	6.16E+02
I-135	2.69E+03	6.99E+03	9.36E+05	1.11E+04	0.	5.25E+03	0.	2.58E+03
CS-134	4.83E+05	1.10E+06	0.	2.88E+05	1.44E+05	8.96E+03	0.	5.44E+05
CS-136	3.91E+04	1.46E+05	0.	8.56E+04	1.20E+04	1.17E+04	0.	1.11E+05
CS-137	6.42E+05	8.24E+05	0.	2.22E+05	1.18E+05	7.68E+03	0.	3.03E+05
BA-140	5.30E+03	4.85E+00	0.	1.67E+01	2.02E+06	2.12E+04	0.	3.42E+02
CE-141	2.27E+03	1.52E+03	0.	6.26E+03	5.83E+05	1.14E+05	0.	1.74E+02
CE-144	4.19E+05	1.74E+05	0.	8.48E+05	1.38E+07	8.40E+05	0.	2.24E+04
PR-143	9.36E+03	3.75E+03	0.	2.16E+03	2.81E+05	2.00E+05	0.	4.63E+02
ND-147	5.27E+03	6.10E+03	0.	3.56E+03	2.21E+05	1.73E+05	0.	3.65E+02

BASED ON 1 μCi/SEC RELEASE RATE OF EACH ISOTOPE AND A VALUE OF 1 FOR χ/Q AND χ_d/Q.

3.0 RADIOACTIVE GASEOUS EFFLUENTS

ENVIRONMENTAL PATHWAY DOSE CONVERSION FACTORS FOR GASEOUS EFFLUENTS

PATHWAY - INHALATION								AGE GROUP - CHILD
NUCLIDE	ORGAN DOSE FACTORS (MREM/YR PER UCI/CU.METER)							
	BONE	LIVER	THYROID	KIDNEY	LUNG	GI-LLI	SKIN	TOTAL BODY
H-3	0.	7.51E+02	7.51E+02	4.96E+02	7.51E+02	7.51E+02	0.	7.51E+02
C-14	6.25E+03	6.25E+03	6.25E+03	1.58E+03	6.25E+03	6.25E+03	0.	6.25E+03
P-32	6.11E+05	3.57E+04	0.	0.	0.	4.00E+04	0.	2.32E+04
CR-51	0.	0.	2.75E+01	1.06E+01	6.66E+03	1.54E+03	0.	4.63E+01
MN-54	0.	1.83E+04	0.	4.55E+03	6.48E+05	3.58E+04	0.	2.91E+03
FE-59	5.44E+03	1.28E+07	0.	0.	4.70E+05	8.70E+04	0.	4.88E+03
CO-57	0.	3.20E+02	0.	0.	1.71E+05	1.45E+04	0.	3.10E+02
CO-58	0.	1.52E+02	0.	0.	1.13E+06	3.62E+04	0.	2.68E+02
CO-60	0.	1.07E+03	0.	0.	6.92E+06	9.36E+04	0.	1.88E+03
NI-63	2.00E+05	1.45E+04	0.	0.	8.25E+04	6.18E+03	0.	6.70E+03
ZN-65	1.50E+04	4.77E+04	0.	3.19E+04	4.03E+05	2.47E+04	0.	2.15E+04
RB-86	0.	6.25E+04	0.	0.	0.	7.70E+03	0.	2.73E+04
SR-89	5.37E+04	0.	0.	0.	2.24E+06	1.69E+05	0.	1.54E+03
SR-90	1.64E+07	0.	0.	0.	1.48E+07	3.45E+05	0.	9.99E+05
Y-91	7.44E+04	0.	0.	0.	2.55E+06	1.78E+05	0.	1.98E+03
ZR-95	1.41E+04	3.28E+03	0.	2.51E+04	2.12E+06	5.74E+04	0.	2.98E+03
NB-95	1.70E+03	7.25E+02	0.	3.58E+03	5.85E+05	3.32E+04	0.	5.33E+02
RU-103	2.16E+02	0.	0.	2.70E+03	6.33E+05	4.22E+04	0.	8.73E+01
RU-106	1.15E+04	0.	0.	6.18E+04	1.45E+07	4.37E+05	0.	1.44E+03
AG-110M	5.00E+03	4.63E+03	0.	9.10E+03	2.15E+06	1.40E+05	0.	2.75E+03
CD-115M	0.	9.10E+04	0.	7.33E+04	6.51E+05	1.78E+05	0.	2.94E+03

BASED ON 1 μCi/SEC RELEASE RATE OF EACH ISOTOPE AND A VALUE OF 1 FOR χ/Q AND χ_d/Q.

3.0 RADIOACTIVE GASEOUS EFFLUENTS

ENVIRONMENTAL PATHWAY DOSE CONVERSION FACTORS FOR GASEOUS EFFLUENTS

PATHWAY - INHALATION								AGE GROUP - CHILD
NUCLIDE	ORGAN DOSE FACTORS (MREM/YR PER UCI/CU.METER)							
	BONE	LIVER	THYROID	KIDNEY	LUNG	GI-LLI	SKIN	TOTAL BODY
SN-123	3.85E+04	6.44E+02	6.81E+02	0.	3.50E+06	1.49E+05	0.	1.27E+03
SN-126	5.85E+05	1.55E+04	4.55E+03	0.	4.33E+06	5.88E+04	0.	2.22E+04
SB-124	1.44E+04	2.72E+02	3.49E+01	0.	1.15E+06	1.88E+05	0.	5.74E+03
SB-125	3.06E+04	3.30E+02	2.72E+01	0.	1.02E+06	4.66E+04	0.	6.14E+03
TE-125M	5.62E+02	1.94E+02	1.61E+02	5.74E+03	4.81E+05	3.38E+04	0.	7.62E+01
TE-127M	5.85E+03	2.60E+03	1.52E+03	2.12E+04	4.44E+05	6.92E+04	0.	7.25E+02
TE-129M	1.64E+03	5.85E+02	5.40E+02	1.69E+04	1.80E+06	1.82E+05	0.	2.60E+02
I-130	2.12E+03	6.22E+03	8.07E+05	9.66E+03	0.	3.56E+03	0.	2.45E+03
I-131	4.55E+04	4.63E+04	1.54E+07	2.84E+04	0.	2.65E+03	0.	3.50E+04
I-132	5.37E+02	1.51E+03	2.03E+05	2.40E+03	0.	1.88E+02	0.	5.37E+02
I-133	1.68E+04	2.05E+04	5.03E+06	1.20E+04	0.	5.55E+03	0.	8.03E+02
I-134	2.98E+02	7.99E+02	1.06E+05	1.27E+03	0.	4.66E-01	0.	2.85E+02
I-135	1.24E+03	3.23E+03	4.33E+05	5.14E+03	0.	2.43E+03	0.	1.19E+03
CS-134	6.22E+05	9.95E+05	0.	1.33E+05	1.19E+05	3.77E+03	0.	2.23E+05
CS-136	1.81E+04	6.77E+04	0.	3.96E+04	5.55E+03	5.40E+03	0.	5.14E+04
CS-137	8.66E+05	7.99E+05	0.	1.03E+05	1.00E+05	3.41E+03	0.	1.25E+05
BA-140	7.14E+03	4.66E+00	0.	7.73E+00	1.74E+06	9.92E+03	0.	4.22E+02
CE-141	3.13E+03	1.57E+03	0.	2.90E+03	5.14E+05	5.44E+04	0.	2.33E+02
CE-144	5.81E+05	1.82E+05	0.	3.92E+05	1.23E+07	4.00E+05	0.	3.10E+04
PR-143	4.33E+03	1.74E+03	0.	9.99E+02	1.30E+05	9.25E+04	0.	2.14E+02
ND-147	2.44E+03	2.82E+03	0.	1.65E+03	1.02E+05	7.99E+04	0.	1.69E+02

BASED ON 1 μCi/SEC RELEASE RATE OF EACH ISOTOPE AND A VALUE OF 1 FOR χ/Q AND χ_d/Q.

3.0 RADIOACTIVE GASEOUS EFFLUENTS

ENVIRONMENTAL PATHWAY DOSE CONVERSION FACTORS FOR GASEOUS EFFLUENTS

PATHWAY - INHALATION								AGE GROUP - INFANT
NUCLIDE	ORGAN DOSE FACTORS (MREM/YR PER UCI/CU.METER)							
	BONE	LIVER	THYROID	KIDNEY	LUNG	GI-LLI	SKIN	TOTAL BODY
H-3	0.	4.30E+02	4.30E+02	1.88E+02	4.30E+02	4.30E+02	0.	4.30E+02
C-14	5.04E+03	4.28E+03	4.28E+03	5.98E+02	4.28E+03	4.28E+03	0.	4.28E+03
P-32	2.31E+05	1.35E+04	0.	0.	0.	1.51E+04	0.	8.78E+03
CR-51	0.	0.	1.94E+01	3.99E+00	2.52E+03	5.81E+02	0.	1.75E+01
MN-54	0.	6.93E+03	0.	1.72E+03	2.45E+05	1.35E+04	0.	1.10E+03
FE-59	2.06E+03	4.86E+06	0.	0.	1.78E+05	3.29E+04	0.	1.85E+03
CO-57	0.	1.21E+02	0.	0.	6.47E+04	5.50E+03	0.	1.18E+02
CO-58	0.	1.18E+02	0.	0.	8.79E+05	1.21E+04	0.	1.68E+02
CO-60	0.	8.40E+02	0.	0.	5.57E+06	3.28E+04	0.	1.17E+03
NI-63	7.56E+04	5.49E+03	0.	0.	3.12E+04	2.34E+03	0.	2.53E+03
ZN-65	5.67E+03	1.81E+04	0.	1.21E+04	1.53E+05	9.35E+03	0.	8.15E+03
RB-86	0.	2.37E+04	0.	0.	0.	2.91E+03	0.	1.03E+04
SR-89	4.31E+04	0.	0.	0.	2.31E+06	6.80E+04	0.	1.24E+03
SR-90	1.32E+07	0.	0.	0.	1.53E+07	1.39E+05	0.	8.06E+05
Y-91	5.98E+04	0.	0.	0.	2.63E+06	7.17E+04	0.	1.60E+03
ZR-95	1.08E+04	2.73E+03	0.	9.48E+03	1.81E+06	1.41E+04	0.	1.95E+03
NB-95	1.28E+03	5.75E+02	0.	1.35E+03	4.77E+05	1.21E+04	0.	3.37E+02
RU-103	1.69E+02	0.	0.	1.02E+03	5.66E+05	1.58E+04	0.	5.85E+01
RU-106	9.31E+03	0.	0.	2.34E+04	1.50E+07	1.76E+05	0.	1.14E+03
AG-110M	1.89E+03	1.75E+03	0.	3.44E+03	8.12E+05	5.29E+04	0.	1.04E+03
CD-115M	0.	3.44E+04	0.	2.77E+04	2.46E+05	6.72E+04	0.	1.11E+03

BASED ON 1 μCi/SEC RELEASE RATE OF EACH ISOTOPE AND A VALUE OF 1 FOR χ/Q AND χ_d/Q.

3.0 RADIOACTIVE GASEOUS EFFLUENTS

ENVIRONMENTAL PATHWAY DOSE CONVERSION FACTORS FOR GASEOUS EFFLUENTS

PATHWAY - INHALATION								AGE GROUP - INFANT
NUCLIDE	ORGAN DOSE FACTORS (MREM/YR PER UCI/CU.METER)							
	BONE	LIVER	THYROID	KIDNEY	LUNG	GI-LLI	SKIN	TOTAL BODY
SN-123	3.11E+04	6.45E+02	6.45E+02	0.	3.61E+06	5.99E+04	0.	1.02E+03
SN-126	2.21E+05	5.85E+03	1.72E+03	0.	1.64E+06	2.23E+04	0.	8.40E+03
SB-124	5.46E+03	1.03E+02	1.32E+01	0.	4.34E+05	7.11E+04	0.	2.17E+03
SB-125	1.16E+04	1.25E+02	1.03E+01	0.	3.85E+05	1.76E+04	0.	2.32E+03
TE-125M	4.54E+02	1.95E+02	1.53E+02	2.17E+03	4.96E+05	1.36E+04	0.	6.16E+01
TE-127M	2.21E+03	9.83E+02	5.75E+02	8.01E+03	1.68E+05	2.62E+04	0.	2.74E+02
TE-129M	1.32E+03	5.80E+02	5.08E+02	6.40E+03	1.83E+06	7.32E+04	0.	2.06E+02
I-130	8.02E+02	2.35E+03	3.05E+05	3.65E+03	0.	1.35E+03	0.	9.25E+02
I-131	3.63E+04	4.27E+04	1.41E+07	1.07E+04	0.	1.07E+03	0.	2.51E+04
I-132	2.03E+02	5.70E+02	7.67E+04	9.09E+02	0.	7.11E+01	0.	2.03E+02
I-133	1.34E+04	1.93E+04	4.66E+06	4.55E+03	0.	2.28E+03	0.	5.87E+03
I-134	1.13E+02	3.02E+02	4.02E+04	4.82E+02	0.	1.76E-01	0.	1.08E+02
I-135	4.70E+02	1.22E+03	1.64E+05	1.95E+03	0.	9.18E+02	0.	4.51E+02
CS-134	4.80E+05	8.25E+05	0.	5.04E+04	1.01E+05	1.37E+03	0.	7.32E+04
CS-136	6.85E+03	2.56E+04	0.	1.50E+04	2.10E+03	2.04E+03	0.	1.95E+04
CS-137	6.86E+05	7.31E+05	0.	3.89E+04	9.45E+04	1.32E+03	0.	4.41E+04
BA-140	5.70E+03	4.27E+00	0.	2.93E+00	1.64E+06	3.88E+03	0.	2.95E+02
CE-141	2.52E+03	1.55E+03	0.	1.10E+03	5.24E+05	2.06E+04	0.	1.81E+02
CE-144	4.68E+05	1.82E+05	0.	1.48E+05	1.27E+07	1.61E+05	0.	2.49E+04
PR-143	1.64E+03	6.57E+02	0.	3.78E+02	4.91E+04	3.50E+04	0.	8.11E+01
ND-147	9.28E+02	1.07E+03	0.	6.28E+02	3.86E+04	3.02E+04	0.	6.38E+01

BASED ON 1 μCi/SEC RELEASE RATE OF EACH ISOTOPE AND A VALUE OF 1 FOR χ/Q AND χ_d/Q.

3.0 RADIOACTIVE GASEOUS EFFLUENTS

ENVIRONMENTAL PATHWAY DOSE CONVERSION FACTORS FOR GASEOUS EFFLUENTS

PATHWAY - AIR-GRASS-COW-MEAT (CONTAMINATED FORAGE)								AGE GROUP - ADULT
NUCLIDE	ORGAN DOSE FACTORS (SQ.METER-MREM/YR PER UCI/SEC)							
	BONE	LIVER	THYROID	KIDNEY	LUNG	GI-LLI	SKIN	TOTAL BODY
H-3	0.	4.13E+02	4.13E+02	4.13E+02	4.13E+02	4.13E+02	0.	4.13E+02
C-14	3.33E+05	6.67E+04	6.67E+04	6.67E+04	6.67E+04	6.67E+04	0.	6.67E+04
P-32	4.67E+09	2.93E+08	0.	0.	0.	5.25E+08	0.	1.81E+08
CR-51	0.	0.	4.23E+03	1.56E+03	9.38E+03	1.78E+06	0.	7.07E+03
MN-54	0.	9.18E+06	0.	2.73E+06	0.	2.81E+07	0.	1.75E+06
FE-59	2.67E+08	6.33E+08	0.	0.	1.76E+08	2.09E+09	0.	2.41E+08
CO-57	0.	5.64E+06	0.	0.	0.	1.43E+08	0.	9.38E+06
CO-58	0.	1.83E+07	0.	0.	0.	3.70E+08	0.	4.09E+07
CO-60	0.	7.55E+07	O.	0.	0.	1.41E+09	0.	1.66E+08
NI-63	1.89E+09	1.31E+08	0.	0.	0.	2.73E+07	0.	6.33E+07
ZN-65	3.56E+08	1.13E+09	0.	7.57E+08	0.	7.13E+08	0.	5.12E+08
RB-86	0.	4.89E+08	0.	0.	0.	9.64E+07	0.	2.28E+08
SR-89	3.03E+08	0.	0.	0.	0.	4.84E+07	0.	8.67E+06
SR-90	1.25E+10	0.	0.	O.	0.	1.45E+09	0.	3.05E+09
Y-91	1.14E+06	0.	0.	0.	0.	6.26E+08	0.	3.05E+04
ZR-95	3.78E+06	1.67E+06	0.	2.01E+06	0.	8.30E+09	0.	8.26E+05
NB-95	2.30E+06	1.20E+06	0.	1.27E+06	0.	7.75E+09	0.	5.02E+05
RU-103	1.06E+08	0.	0.	4.06E+08	0.	1.24E+10	0.	4.59E+07
RU-106	2.80E+09	0.	0.	5.41E+09	0.	1.81E+11	0.	3.54E+08
AG-110M	6.71E+06	6.21E+06	0.	1.22E+07	0.	2.53E+09	0.	3.69E+06
CD-115M	0.	1.46E+06	0.	1.16E+06	0.	6.15E+07	0.	4.67E+04

BASED ON 1 μCi/SEC RELEASE RATE OF EACH ISOTOPE AND A VALUE OF 1 FOR χ/Q, χ_d/Q, AND D/Q.

NOTE - THE UNITS FOR C-14 AND H-3 ARE (MREM/YR PER UCI/CU.METER)

3.0 RADIOACTIVE GASEOUS EFFLUENTS

ENVIRONMENTAL PATHWAY DOSE CONVERSION FACTORS FOR GASEOUS EFFLUENTS

PATHWAY - AIR-GRASS-COW-MEAT (CONTAMINATED FORAGE)								AGE GROUP - ADULT
NUCLIDE	ORGAN DOSE FACTORS (SQ.METER-MREM/YR PER UCI/SEC)							
	BONE	LIVER	THYROID	KIDNEY	LUNG	GI-LLI	SKIN	TOTAL BODY
SN-123	0.	0.	0.	0.	0.	0.	0.	0.
SN-126	1.86E+10	3.69E+08	1.08E+08	0.	6.46E+06	6.19E+09	0.	5.33E+08
SB-124	1.99E+07	3.75E+05	4.80E+04	0.	1.54E+07	5.62E+08	0.	7.85E+06
SB-125	6.65E+07	1.58E+07	1.29E+07	1.74E+08	2.49E+09	3.80E+08	0.	1.05E+07
TE-125M	3.59E+08	1.30E+08	1.08E+08	1.46E+09	0.	1.43E+09	0.	4.81E+07
TE-127M	1.13E+09	3.93E+08	2.96E+08	4.56E+09	0.	5.11E+09	0.	1.39E+08
TE-129M	1.14E+09	4.29E+08	3.95E+08	4.79E+09	0.	5.76E+09	0.	1.82E+08
I-130	2.38E-06	7.05E-06	8.96E-04	1.10E-05	0.	6.04E-06	0.	2.77E-06
I-131	1.08E+07	1.55E+07	5.06E+09	2.65E+07	0.	4.07E+06	0.	8.85E+06
I-132	0.	0.	0.	0.	0.	0.	0.	0.
I-133	4.40E-01	7.63E-01	1.47E+02	1.33E+00	0.	6.71E-01	0.	2.33E-01
I-134	0.	0.	0.	0.	0.	0.	0.	0.
I-135	8.60E-02	7.94E-02	0.	3.01E-02	9.04E-03	1.86E-03	0.	3.53E-02
CS-134	6.58E+08	1.57E+09	0.	5.08E+08	1.68E+08	2.74E+07	0.	1.28E+09
CS-136	1.18E+07	4.67E+07	0.	2.60E+07	3.56E+06	5.31E+06	0.	3.36E+07
CS-137	8.73E+08	1.19E+09	0.	4.06E+08	1.35E+08	2.30E+07	0.	7.82E+08
BA-140	2.88E+07	3.63E+04	0.	1.23E+04	2.07E+04	6.87E+07	0.	1.90E+06
CE-141	1.41E+04	9.52E+03	0.	4.41E+03	0.	3.63E+07	0.	1.08E+03
CE-144	1.46E+06	6.10E+05	0.	3.62E+05	0.	4.93E+08	0.	7.83E+04
PR-143	2.13E+04	8.57E+03	0.	4.94E+03	0.	9.34E+07	0.	1.06E+03
ND-147	1.72E+04	9.29E+03	0.	6.64E+03	0.	4.13E+07	0.	8.76E+02

BASED ON 1 μCi/SEC RELEASE RATE OF EACH ISOTOPE AND A VALUE OF 1 FOR χ/Q, χ_d/Q, AND D/Q.

NOTE - THE UNITS FOR C-14 AND H-3 ARE (MREM/YR PER UCI/CU.METER)

3.0 RADIOACTIVE GASEOUS EFFLUENTS

ENVIRONMENTAL PATHWAY DOSE CONVERSION FACTORS FOR GASEOUS EFFLUENTS

PATHWAY - AIR-GRASS-COW-MEAT (CONTAMINATED FORAGE)								AGE GROUP - TEENAGER
NUCLIDE	ORGAN DOSE FACTORS (SQ.METER-MREM/YR PER UCI/SEC)							
	BONE	LIVER	THYROID	KIDNEY	LUNG	GI-LLI	SKIN	TOTAL BODY
H-3	0.	1.93E+02	1.93E+02	2.44E+02	1.93E+02	1.93E+02	0.	1.93E+02
C-14	5.23E+04	5.23E+04	5.23E+04	3.94E+04	5.23E+04	5.23E+04	0.	5.23E+04
P-32	2.76E+09	1.73E+08	0.	0.	0.	3.10E+08	0.	1.07E+08
CR-51	0.	0.	2.50E+02	9.22E+02	5.55E+03	1.05E+06	0.	4.18E+03
MN-54	0.	5.42E+06	0.	1.61E+06	0.	1.66E+07	0.	1.04E+06
FE-59	1.58E+08	3.74E+08	0.	0.	1.04E+08	1.24E+09	0.	1.42E+08
CO-57	0.	3.33E+06	0.	0.	0.	8.45E+07	0.	5.54E+06
CO-58	0.	1.44E+07	0.	0.	0.	1.94E+08	0.	3.27E+07
CO-60	0.	5.73E+07	0.	0.	0.	6.87E+08	0.	1.31E+08
NI-63	1.12E+09	7.74E+07	0.	0.	0.	1.61E+07	0.	3.74E+07
ZN-65	2.11E+08	6.69E+08	0.	4.47E+08	0.	4.21E+08	0.	3.03E+08
RB-86	0.	2.89E+08	0.	0.	0.	5.69E+07	0.	1.35E+08
SR-89	2.66E+08	0.	0.	0.	0.	2.89E+07	0.	7.64E+06
SR-90	1.01E+10	0.	0.	O.	2.79E+08	1.02E+09	0.	2.49E+09
Y-91	9.34E+05	0.	0.	0.	0.	3.59E+08	0.	2.49E+04
ZR-95	2.67E+06	1.24E+06	0.	1.18E+06	0.	4.20E+09	0.	7.61E+05
NB-95	1.58E+05	9.51E+05	0.	7.48E+05	0.	3.88E+09	0.	5.37E+05
RU-103	8.05E+07	0.	0.	2.40E+08	0.	6.28E+09	0.	3.60E+07
RU-106	2.40E+09	0.	0.	3.20E+09	0.	1.09E+11	0.	3.02E+08
AG-110M	3.97E+06	3.67E+06	0.	7.21E+06	0.	1.50E+09	0.	2.18E+06
CD-115M	0.	8.64E+05	0.	6.85E+05	0.	3.63E+07	0.	2.76E+04

BASED ON 1 μCi/SEC RELEASE RATE OF EACH ISOTOPE AND A VALUE OF 1 FOR χ/Q, χ_d/Q, AND D/Q.

NOTE - THE UNITS FOR C-14 AND H-3 ARE (MREM/YR PER UCI/CU.METER)

3.0 RADIOACTIVE GASEOUS EFFLUENTS

ENVIRONMENTAL PATHWAY DOSE CONVERSION FACTORS FOR GASEOUS EFFLUENTS

PATHWAY - AIR-GRASS-COW-MEAT (CONTAMINATED FORAGE)								AGE GROUP - TEENAGER
NUCLIDE	ORGAN DOSE FACTORS (SQ.METER-MREM/YR PER UCI/SEC)							
	BONE	LIVER	THYROID	KIDNEY	LUNG	GI-LLI	SKIN	TOTAL BODY
SN-123	0.	0.	0.	0.	0.	0.	0.	0.
SN-126	1.10E+10	2.18E+08	6.38E+07	0.	3.82E+06	3.66E+09	0.	3.14E+08
SB-124	1.17E+07	2.21E+05	2.84E+04	0.	9.11E+06	3.32E+08	0.	4.64E+06
SB-125	5.01E+07	1.31E+07	1.02E+07	1.03E+08	1.47E+09	2.25E+08	0.	7.60E+06
TE-125M	3.03E+08	1.08E+08	8.55E+07	8.63E+08	0.	8.47E+08	0.	4.02E+07
TE-127M	6.60E+08	2.34E+08	1.77E+08	2.69E+09	0.	3.35E+09	0.	8.28E+07
TE-129M	9.78E+08	3.63E+08	3.13E+08	2.83E+09	0.	3.41E+09	0.	1.53E+08
I-130	1.41E-06	4.16E-06	5.30E-04	6.47E-06	0.	3.57E-06	0.	1.64E-06
I-131	8.54E+06	1.21E+07	3.48E+09	1.56E+07	0.	2.28E+06	0.	7.19E+06
I-132	0.	0.	0.	0.	0.	0.	0.	0.
I-133	3.69E-01	6.26E-01	1.14E+02	7.88E-01	0.	4.55E-01	0.	1.93E-01
I-134	0.	0.	0.	0.	0.	0.	0.	0.
I-135	5.08E-02	4.69E-02	0.	1.78E-02	5.34E-03	1.10E-03	0.	2.08E-02
CS-134	5.03E+08	1.21E+09	0.	3.00E+08	1.47E+08	1.40E+07	0.	5.66E+08
CS-136	6.99E+06	2.76E+07	0.	1.54E+07	2.11E+06	3.14E+06	0.	1.99E+07
CS-137	6.92E+08	9.31E+08	0.	2.40E+08	1.24E+08	1.24E+07	0.	3.27E+08
BA-140	2.37E+07	2.93E+04	0.	7.20E+04	1.95E+04	9.19E+06	0.	1.53E+06
CE-141	1.12E+04	7.51E+03	0.	2.61E+03	0.	2.03E+07	0.	8.61E+02
CE-144	1.28E+06	5.23E+05	0.	2.14E+05	0.	3.00E+08	0.	6.76E+04
PR-143	1.26E+04	5.07E+03	0.	2.92E+03	0.	5.52E+07	0.	6.26E+02
ND-147	1.01E+04	5.49E+03	0.	3.92E+03	0.	2.44E+07	0.	5.18E+02

BASED ON 1 μCi/SEC RELEASE RATE OF EACH ISOTOPE AND A VALUE OF 1 FOR χ/Q, χ_d/Q, AND D/Q.

NOTE - THE UNITS FOR C-14 AND H-3 ARE (MREM/YR PER UCI/CU.METER)

3.0 RADIOACTIVE GASEOUS EFFLUENTS

ENVIRONMENTAL PATHWAY DOSE CONVERSION FACTORS FOR GASEOUS EFFLUENTS

PATHWAY - AIR-GRASS-COW-MEAT (CONTAMINATED FORAGE)								AGE GROUP - CHILD
NUCLIDE	ORGAN DOSE FACTORS (SQ.METER-MREM/YR PER UCI/SEC)							
	BONE	LIVER	THYROID	KIDNEY	LUNG	GI-LLI	SKIN	TOTAL BODY
H-3	0.	2.33E+02	2.33E+02	1.54E+02	2.33E+02	2.33E+02	0.	2.33E+02
C-14	9.87E+04	9.87E+04	9.87E+04	2.49E+04	9.87E+04	9.87E+04	0.	9.87E+04
P-32	1.74E+09	1.09E+08	0.	0.	0.	1.96E+08	0.	6.73E+07
CR-51	0.	0.	1.58E+03	5.82E+02	3.50E+03	6.63E+05	0.	2.64E+03
MN-54	0.	3.42E+06	0.	1.02E+06	0.	1.05E+07	0.	6.54E+05
FE-59	9.95E+07	2.37E+08	0.	0.	6.55E+07	7.79E+08	0.	8.93E+07
CO-57	0.	2.10E+06	0.	0.	0.	5.33E+07	0.	3.50E+06
CO-58	0.	1.69E+07	0.	0.	0.	1.00E+08	0.	5.10E+07
CO-60	0.	6.77E+07	0.	0.	0.	3.75E+08	0.	2.03E+08
NI-63	7.04E+08	4.88E+07	0.	0.	0.	1.02E+07	0.	2.36E+07
ZN-65	1.33E+08	4.22E+08	0.	2.82E+08	0.	2.66E+08	0.	1.91E+08
RB-86	0.	1.82E+08	0.	0.	0.	3.59E+07	0.	8.50E+07
SR-89	5.04E+08	0.	0.	0.	0.	1.88E+07	0.	1.44E+07
SR-90	1.05E+10	0.	0.	O.	0.	7.02E+08	0.	2.67E+09
Y-91	1.76E+06	0.	0.	0.	0.	2.33E+08	0.	4.69E+04
ZR-95	4.62E+06	1.51E+06	0.	7.47E+05	0.	2.22E+09	0.	1.20E+06
NB-95	2.68E+06	1.15E+06	0.	4.72E+05	0.	1.98E+09	0.	8.41E+05
RU-103	1.54E+08	0.	0.	1.51E+08	0.	3.81E+09	0.	5.87E+07
RU-106	4.51E+09	0.	0.	2.02E+09	0.	7.01E+10	0.	5.61E+08
AG-110M	2.50E+06	2.31E+06	0.	4.55E+06	0.	9.44E+08	0.	1.38E+06
CD-115M	0.	5.45E+05	0.	4.32E+05	0.	2.29E+07	0.	1.74E+04

NOTE - T BASED ON 1 μCi/SEC RELEASE RATE OF EACH ISOTOPE AND A VALUE OF 1 FOR χ/Q, χ_a/Q, AND D/Q.

THE UNITS FOR C-14 AND H-3 ARE (MREM/YR PER UCI/CU.METER)

3.0 RADIOACTIVE GASEOUS EFFLUENTS

ENVIRONMENTAL PATHWAY DOSE CONVERSION FACTORS FOR GASEOUS EFFLUENTS

PATHWAY - AIR-GRASS-COW-MEAT (CONTAMINATED FORAGE)								AGE GROUP - CHILD
NUCLIDE	ORGAN DOSE FACTORS (SQ.METER-MREM/YR PER UCI/SEC)							
	BONE	LIVER	THYROID	KIDNEY	LUNG	GI-LLI	SKIN	TOTAL BODY
SN-123	0.	0.	0.	0.	0.	0.	0.	0.
SN-126	6.92E+09	1.37E+08	4.02E+07	0.	2.41E+06	2.31E+09	0.	1.98E+08
SB-124	7.40E+06	1.40E+05	1.79E+04	0.	5.74E+06	2.10E+08	0.	2.93E+06
SB-125	7.66E+07	1.84E+07	1.90E+07	6.47E+07	9.26E+08	1.44E+08	0.	1.08E+07
TE-125M	5.69E+08	1.54E+08	1.60E+08	5.44E+08	0.	5.49E+08	0.	7.59E+07
TE-127M	4.40E+08	1.51E+08	1.24E+08	1.70E+09	0.	2.54E+09	0.	5.61E+07
TE-129M	1.84E+09	5.12E+08	5.87E+08	1.78E+09	0.	2.21E+09	0.	2.84E+08
I-130	8.87E-07	2.63E-06	3.34E-04	4.08E-06	0.	2.25E-06	0.	1.03E-06
I-131	1.58E+07	1.62E+07	5.25E+09	9.86E+06	0.	1.38E+06	0.	1.22E+07
I-132	0.	0.	0.	0.	0.	0.	0.	0.
I-133	6.86E-01	8.47E-01	2.04E+02	4.97E-01	0.	3.43E-01	0.	3.33E-01
I-134	0.	0.	0.	0.	0.	0.	0.	0.
I-135	3.21E-02	2.96E-02	0.	1.12E-02	3.37E-03	6.92E-04	0.	1.32E-02
CS-134	8.83E+08	1.49E+09	0.	1.89E+08	1.65E+08	8.04E+06	0.	3.16E+08
CS-136	4.41E+06	1.74E+07	0.	9.69E+06	1.33E+06	1.98E+06	0.	1.25E+07
CS-137	1.27E+09	1.23E+09	0.	1.51E+08	1.44E+08	7.50E+06	0.	1.84E+08
BA-140	4.37E+07	3.84E+04	0.	4.59E+03	2.29E+04	6.03E+06	0.	2.57E+06
CE-141	2.10E+04	1.05E+04	0.	1.65E+03	0.	1.32E+07	0.	1.57E+03
CE-144	2.38E+06	7.46E+05	0.	1.35E+05	0.	1.94E+08	0.	1.27E+05
PR-143	7.96E+03	3.20E+03	0.	1.84E+03	0.	3.48E+07	0.	3.95E+02
ND-147	6.40E+03	3.47E+03	0.	2.48E+03	0.	1.53E+07	0.	3.27E+02

BASED ON 1 μCi/SEC RELEASE RATE OF EACH ISOTOPE AND A VALUE OF 1 FOR χ/Q, χ_d/Q, AND D/Q.

NOTE - THE UNITS FOR C-14 AND H-3 ARE (MREM/YR PER UCI/CU.METER)

3.0 RADIOACTIVE GASEOUS EFFLUENTS

ENVIRONMENTAL PATHWAY DOSE CONVERSION FACTORS FOR GASEOUS EFFLUENTS

PATHWAY - AIR-GRASS-COWS-MILK (CONTAMINATED FORAGE)								AGE GROUP - ADULT
NUCLIDE	ORGAN DOSE FACTORS (SQ.METER-MREM/YR PER UCI/SEC)							
	BONE	LIVER	THYROID	KIDNEY	LUNG	GI-LLI	SKIN	TOTAL BODY
H-3	0.	9.73E+02	9.73E+02	9.73E+02	9.73E+02	9.73E+02	0.	9.73E+02
C-14	3.63E+05	7.28E+04	7.28E+04	7.28E+04	7.28E+04	7.28E+04	0.	7.28E+04
P-32	1.71E+10	1.07E+09	0.	0.	0.	1.92E+09	0.	6.62E+08
CR-51	0.	0.	1.71E+04	6.32E+03	3.80E+04	7.20E+06	0.	2.86E+04
MN-54	0.	8.41E+06	0.	2.50E+06	0.	2.58E+07	0.	1.61E+06
FE-59	2.98E+07	7.06E+07	0.	0.	1.96E+07	2.33E+08	0.	2.69E+07
CO-57	0.	1.28E+06	0.	0.	0.	3.25E+07	0.	2.13E+06
CO-58	0.	4.72E+06	0.	0.	0.	9.56E+07	0.	1.06E+07
CO-60	0.	1.65E+07	0.	0.	0.	3.08E+08	0.	3.62E+07
NI-63	6.73E+09	4.67E+08	0.	0.	0.	9.73E+07	0.	2.26E+08
ZN-65	1.37E+09	4.36E+09	0.	2.92E+09	0.	2.75E+09	0.	1.98E+09
RB-86	0.	2.60E+09	0.	0.	0.	5.12E+08	0.	1.21E+09
SR-89	1.46E+09	0.	0.	0.	0.	2.33E+08	0.	4.17E+07
SR-90	4.70E+10	0.	0.	0.	0.	6.37E+08	0.	1.15E+10
Y-91	8.60E+03	0.	0.	0.	0.	4.73E+06	0.	2.31E+02
ZR-95	3.18E+04	1.75E+04	0.	1.75E+04	0.	1.05E+08	0.	6.95E+03
NB-95	8.26E+04	4.59E+04	0.	4.55E+04	0.	2.79E+08	0.	1.80E+04
RU-103	1.02E+03	0.	0.	3.91E+03	0.	1.19E+05	0.	4.41E+02
RU-106	2.04E+04	0.	0.	3.95E+04	0.	1.32E+06	0.	2.58E+03
AG-110M	5.84E+07	5.40E+07	0.	1.96E+08	0.	2.20E+10	0.	3.21E+07
CD-115M	0.	1.25E+06	0.	9.89E+05	0.	5.24E+07	0.	3.98E+04

BASED ON 1 μCi/SEC RELEASE RATE OF EACH ISOTOPE AND A VALUE OF 1 FOR χ/Q, χ_d/Q, AND D/Q.

NOTE - THE UNITS FOR C-14 AND H-3 ARE (MREM/YR PER UCI/CU.METER)

3.0 RADIOACTIVE GASEOUS EFFLUENTS

ENVIRONMENTAL PATHWAY DOSE CONVERSION FACTORS FOR GASEOUS EFFLUENTS

PATHWAY - AIR-GRASS-COWS-MILK (CONTAMINATED FORAGE)								AGE GROUP - ADULT
NUCLIDE	ORGAN DOSE FACTORS (SQ.METER-MREM/YR PER UCI/SEC)							
	BONE	LIVER	THYROID	KIDNEY	LUNG	GI-LLI	SKIN	TOTAL BODY
SN-123	0.	0.	0.	0.	0.	0.	0.	0.
SN-126	1.65E+09	3.27E+07	9.56E+06	0.	4.67E+06	1.09E+09	0.	4.94E+07
SB-124	2.58E+07	4.87E+05	6.24E+04	0.	2.00E+07	7.31E+08	0.	1.02E+07
SB-125	2.84E+07	6.06E+05	2.99E+05	3.72E+06	2.66E+09	2.29E+08	0.	5.23E+06
TE-125M	1.63E+07	5.91E+06	4.91E+06	6.63E+07	0.	6.50E+07	0.	2.18E+06
TE-127M	4.63E+07	1.63E+07	1.21E+07	1.88E+08	0.	2.11E+08	0.	5.72E+06
TE-129M	8.06E+07	2.27E+07	2.09E+07	2.53E+08	0.	3.04E+08	0.	9.61E+06
I-130	4.27E+05	1.26E+08	1.61E+08	1.96E+06	0.	1.08E+06	0.	4.97E+05
I-131	2.96E+08	4.25E+08	1.39E+11	7.27E+08	0.	1.12E+08	0.	2.43E+08
I-132	1.67E-01	4.47E-01	5.88E+01	7.12E-01	0.	8.39E-02	0.	1.59E-01
I-133	4.00E+06	6.94E+06	1.33E+09	1.21E+07	0.	6.10E+06	0.	2.12E+06
I-134	0.	0.	9.98E-10	0.	0.	0.	0.	0.
I-135	1.40E+04	3.70E+04	4.84E+06	5.88E+04	7.58E-02	4.14E+04	0.	1.36E+04
CS-134	5.66E+09	1.35E+10	0.	4.36E+09	1.45E+09	2.36E+08	0.	1.10E+10
CS-136	2.61E+08	1.03E+09	0.	5.74E+08	7.87E+07	1.17E+08	0.	7.43E+08
CS-137	7.39E+09	1.01E+10	0.	3.44E+09	1.14E+09	1.95E+08	0.	6.62E+09
BA-140	2.69E+07	3.38E+04	0.	1.15E+04	1.93E+04	5.70E+07	0.	1.78E+06
CE-141	2.91E+04	1.97E+04	0.	9.13E+03	0.	7.52E+07	0.	2.23E+03
CE-144	2.15E+06	8.97E+05	0.	5.32E+05	0.	7.26E+08	0.	1.15E+05
PR-143	1.59E+02	6.39E+01	0.	3.68E+01	0.	6.96E+05	0.	7.89E+00
ND-147	1.16E+02	1.12E+02	0.	6.77E+01	0.	5.28E+05	0.	7.34E+00

BASED ON 1 μCi/SEC RELEASE RATE OF EACH ISOTOPE AND A VALUE OF 1 FOR χ/Q, χ_d/Q, AND D/Q.

NOTE - THE UNITS FOR C-14 AND H-3 ARE (MREM/YR PER UCI/CU.METER)

3.0 RADIOACTIVE GASEOUS EFFLUENTS

ENVIRONMENTAL PATHWAY DOSE CONVERSION FACTORS FOR GASEOUS EFFLUENTS

PATHWAY - AIR-GRASS-COWS-MILK (CONTAMINATED FORAGE)								AGE GROUP - TEENAGER
NUCLIDE	ORGAN DOSE FACTORS (SQ.METER-MREM/YR PER UCI/SEC)							
	BONE	LIVER	THYROID	KIDNEY	LUNG	GI-LLI	SKIN	TOTAL BODY
H-3	0.	9.93E+02	9.93E+02	1.26E+03	9.93E+02	9.93E+02	0.	9.93E+02
C-14	1.25E+05	1.25E+05	1.25E+05	9.39E+04	1.25E+05	1.25E+05	0.	1.25E+05
P-32	2.21E+10	1.38E+09	0.	0.	0.	2.48E+09	0.	8.54E+08
CR-51	0.	0.	2.21E+04	8.15E+03	4.90E+04	9.29E+06	0.	3.69E+04
MN-54	0.	1.09E+07	0.	3.32E+06	0.	3.33E+07	0.	2.07E+06
FE-59	3.84E+07	9.12E+07	0.	0.	2.53E+07	3.01E+08	0.	3.47E+07
CO-57	0.	1.65E+06	0.	0.	0.	4.19E+07	0.	2.75E+06
CO-58	0.	8.10E+06	0.	0.	0.	1.10E+08	0.	1.85E+07
CO-60	0.	2.73E+07	0.	0.	0.	3.27E+08	0.	6.23E+07
NI-63	8.68E+09	6.02E+08	0.	0.	0.	1.26E+08	0.	2.91E+08
ZN-65	1.77E+09	5.63E+09	0.	3.77E+09	0.	3.55E+09	0.	2.55E+09
RB-86	0.	3.35E+09	0.	0.	0.	6.61E+08	0.	1.56E+09
SR-89	2.80E+09	0.	0.	0.	0.	3.03E+08	0.	8.03E+07
SR-90	8.29E+10	0.	0.	0.	3.38E+06	1.76E+09	0.	2.05E+10
Y-91	1.54E+04	0.	0.	0.	0.	5.93E+06	0.	4.12E+02
ZR-95	4.78E+04	2.84E+04	0.	2.25E+04	0.	1.15E+08	0.	1.60E+04
NB-95	1.24E+05	7.46E+04	0.	5.87E+04	0.	3.05E+08	0.	4.21E+04
RU-103	1.69E+03	0.	0.	5.04E+03	0.	1.32E+05	0.	7.56E+02
RU-106	3.83E+04	0.	0.	5.09E+04	0.	1.73E+06	0.	4.81E+03
AG-110M	7.53E+07	6.97E+07	0.	1.37E+08	0.	2.84E+10	0.	4.14E+07
CD-115M	0.	1.61E+06	0.	1.28E+06	0.	6.77E+07	0.	5.14E+04

BASED ON 1 μCi/SEC RELEASE RATE OF EACH ISOTOPE AND A VALUE OF 1 FOR χ/Q, χ_d/Q, AND D/Q.

NOTE - THE UNITS FOR C-14 AND H-3 ARE (MREM/YR PER UCI/CU.METER)

3.0 RADIOACTIVE GASEOUS EFFLUENTS

ENVIRONMENTAL PATHWAY DOSE CONVERSION FACTORS FOR GASEOUS EFFLUENTS

PATHWAY - AIR-GRASS-COWS-MILK (CONTAMINATED FORAGE)								AGE GROUP - TEENAGER
NUCLIDE	ORGAN DOSE FACTORS (SQ.METER-MREM/YR PER UCI/SEC)							
	BONE	LIVER	THYROID	KIDNEY	LUNG	GI-LLI	SKIN	TOTAL BODY
SN-123	0.	0.	0.	0.	0.	0.	0.	0.
SN-126	2.12E+09	4.21E+07	1.24E+07	0.	6.03E+06	1.41E+09	0.	6.37E+07
SB-124	3.33E+07	6.29E+05	8.05E+04	0.	2.59E+07	9.43E+08	0.	1.32E+07
SB-125	3.45E+07	9.58E+05	5.05E+05	4.80E+06	3.43E+09	2.95E+08	0.	6.82E+06
TE-125M	3.00E+07	1.08E+07	8.47E+06	8.55E+07	0.	8.39E+07	0.	3.98E+06
TE-127M	6.02E+07	2.11E+07	1.59E+07	2.43E+08	0.	3.02E+08	0.	7.45E+06
TE-129M	1.13E+08	4.18E+07	3.61E+07	3.27E+08	0.	3.93E+08	0.	1.78E+07
I-130	5.51E+05	1.63E+06	2.07E+08	2.53E+06	0.	1.40E+06	0.	6.41E+05
I-131	5.12E+08	7.24E+08	2.09E+11	9.38E+08	0.	1.37E+08	0.	4.31E+08
I-132	2.16E-01	5.76E-01	7.59E+01	9.19E-01	0.	1.08E-01	0.	2.05E-01
I-133	7.33E+06	1.24E+07	2.26E+09	1.56E+07	0.	9.02E+06	0.	3.83E+06
I-134	0.	0.	1.29E-09	0.	0.	0.	0.	0.
I-135	1.81E+04	4.77E+04	6.24E+06	7.58E+04	9.79E-02	5.34E+04	0.	1.75E+04
CS-134	9.44E+09	2.28E+10	0.	5.63E+09	2.76E+09	2.63E+08	0.	1.06E+10
CS-136	3.37E+08	1.33E+09	0.	7.41E+08	1.02E+08	1.51E+08	0.	9.58E+08
CS-137	1.28E+10	1.72E+10	0.	4.43E+09	2.28E+09	2.29E+08	0.	6.04E+09
BA-140	4.84E+07	5.95E+04	0.	1.48E+04	3.98E+04	9.16E+06	0.	3.11E+06
CE-141	5.05E+04	3.39E+04	0.	1.18E+04	0.	9.18E+07	0.	3.89E+03
CE-144	4.10E+06	1.68E+06	0.	6.87E+05	0.	9.65E+08	0.	2.17E+05
PR-143	2.05E+02	8.25E+01	0.	4.75E+01	0.	8.98E+05	0.	1.02E+01
ND-147	1.49E+02	1.44E+02	0.	8.74E+01	0.	6.82E+05	0.	9.48E+00

BASED ON 1 μCi/SEC RELEASE RATE OF EACH ISOTOPE AND A VALUE OF 1 FOR χ/Q, χ_d/Q, AND D/Q.

NOTE - THE UNITS FOR C-14 AND H-3 ARE (MREM/YR PER UCI/CU.METER)

3.0 RADIOACTIVE GASEOUS EFFLUENTS

ENVIRONMENTAL PATHWAY DOSE CONVERSION FACTORS FOR GASEOUS EFFLUENTS

PATHWAY - AIR-GRASS-COWS-MILK (CONTAMINATED FORAGE)								AGE GROUP - CHILD
NUCLIDE	ORGAN DOSE FACTORS (SQ.METER-MREM/YR PER UCI/SEC)							
	BONE	LIVER	THYROID	KIDNEY	LUNG	GI-LLI	SKIN	TOTAL BODY
H-3	0.	1.57E+03	1.57E+03	1.04E+03	1.57E+03	1.57E+03	0.	1.57E+03
C-14	3.08E+05	3.08E+05	3.08E+05	7.75E+04	3.08E+05	3.08E+05	0.	3.08E+05
P-32	1.82E+10	1.14E+09	0.	0.	0.	2.05E+09	0.	7.05E+08
CR-51	0.	0.	1.82E+04	6.72E+03	4.04E+04	7.66E+06	0.	3.05E+04
MN-54	0.	8.96E+06	0.	2.67E+06	0.	2.74E+07	0.	1.71E+06
FE-59	3.17E+07	7.52E+07	0.	0.	2.09E+07	2.48E+08	0.	2.86E+07
CO-57	0.	1.36E+06	0.	0.	0.	3.46E+07	0.	2.27E+06
CO-58	0.	1.25E+07	0.	0.	0.	7.41E+07	0.	3.76E+07
CO-60	0.	4.22E+07	0.	0.	0.	2.33E+08	0.	1.27E+08
NI-63	7.16E+09	4.97E+08	0.	0.	0.	1.04E+08	0.	2.40E+08
ZN-65	1.46E+09	4.65E+09	0.	3.11E+09	0.	2.93E+09	0.	2.10E+09
RB-86	0.	2.77E+09	0.	0.	0.	5.45E+08	0.	1.29E+09
SR-89	6.92E+09	0.	0.	0.	0.	2.58E+08	0.	1.98E+08
SR-90	1.13E+11	0.	0.	0.	0.	1.52E+09	0.	2.87E+10
Y-91	3.80E+04	0.	0.	0.	0.	5.05E+06	0.	1.01E+03
ZR-95	1.06E+05	4.47E+04	0.	1.86E+04	0.	7.68E+07	0.	3.29E+04
NB-95	2.75E+05	1.18E+05	0.	4.84E+04	0.	2.03E+08	0.	8.63E+04
RU-103	3.99E+03	0.	0.	4.16E+03	0.	1.05E+05	0.	1.61E+03
RU-106	9.39E+04	0.	0.	4.20E+04	0.	1.46E+06	0.	1.17E+04
AG-110M	6.21E+07	5.75E+07	0.	1.13E+08	0.	2.35E+10	0.	3.42E+07
CD-115M	0.	1.33E+06	0.	1.05E+06	0.	5.58E+07	0.	4.24E+04

BASED ON 1 μCi/SEC RELEASE RATE OF EACH ISOTOPE AND A VALUE OF 1 FOR χ/Q, χ_d/Q, AND D/Q.

NOTE - THE UNITS FOR C-14 AND H-3 ARE (MREM/YR PER UCI/CU.METER)

3.0 RADIOACTIVE GASEOUS EFFLUENTS

ENVIRONMENTAL PATHWAY DOSE CONVERSION FACTORS FOR GASEOUS EFFLUENTS

PATHWAY - AIR-GRASS-COWS-MILK (CONTAMINATED FORAGE)								AGE GROUP - CHILD
NUCLIDE	ORGAN DOSE FACTORS (SQ.METER-MREM/YR PER UCI/SEC)							
	BONE	LIVER	THYROID	KIDNEY	LUNG	GI-LLI	SKIN	TOTAL BODY
SN-123	0.	0.	0.	0.	0.	0.	0.	0.
SN-126	1.75E+09	3.48E+07	1.01E+07	0.	4.97E+06	1.16E+09	0.	5.25E+07
SB-124	2.75E+07	5.19E+05	6.64E+04	0.	2.13E+07	7.78E+08	0.	1.09E+07
SB-125	3.13E+07	1.41E+05	1.18E+06	3.96E+06	2.83E+09	2.43E+08	0.	5.99E+06
TE-125M	7.38E+07	2.00E+07	2.07E+07	7.05E+07	0.	7.12E+07	0.	9.84E+06
TE-127M	5.18E+07	1.78E+07	1.46E+07	2.00E+08	0.	2.99E+08	0.	6.60E+06
TE-129M	2.77E+08	7.73E+07	8.85E+07	2.70E+08	0.	3.33E+08	0.	4.28E+07
I-130	4.54E+05	1.35E+06	1.71E+08	2.09E+06	0.	1.15E+06	0.	5.29E+05
I-131	1.24E+09	1.27E+09	4.12E+11	7.74E+08	0.	1.09E+08	0.	9.56E+08
I-132	1.18E-01	4.76E-01	6.26E+01	7.58E-01	0.	8.93E-02	0.	1.69E-01
I-133	1.78E+07	2.20E+07	5.30E+09	1.29E+07	0.	8.90E+06	0.	8.63E+06
I-134	0.	0.	1.06E-09	0.	0.	0.	0.	0.
I-135	1.49E+04	3.94E+04	5.15E+06	6.26E+04	8.07E-02	4.41E+04	0.	1.44E+04
CS-134	2.17E+10	3.65E+10	0.	4.65E+09	4.06E+09	1.97E+08	0.	7.76E+09
CS-136	2.78E+08	1.10E+09	0.	6.11E+08	8.37E+07	1.25E+08	0.	7.90E+08
CS-137	3.08E+10	2.98E+10	0.	3.66E+09	3.49E+09	1.81E+08	0.	4.44E+09
BA-140	1.17E+08	1.02E+05	0.	1.22E+04	6.09E+04	7.75E+06	0.	6.84E+06
CE-141	1.24E+05	6.22E+04	0.	9.72E+03	0.	7.80E+07	0.	9.26E+03
CE-144	1.00E+07	3.14E+06	0.	5.67E+05	0.	8.15E+08	0.	5.34E+05
PR-143	1.69E+02	6.80E+01	0.	3.92E+01	0.	7.41E+05	0.	8.40E+00
ND-147	1.23E+02	1.19E+02	0.	7.21E+01	0.	5.63E+05	0.	7.81E+00

BASED ON 1 μCi/SEC RELEASE RATE OF EACH ISOTOPE AND A VALUE OF 1 FOR χ/Q, χ_d/Q, AND D/Q.

NOTE - THE UNITS FOR C-14 AND H-3 ARE (MREM/YR PER UCI/CU.METER)

3.0 RADIOACTIVE GASEOUS EFFLUENTS

ENVIRONMENTAL PATHWAY DOSE CONVERSION FACTORS FOR GASEOUS EFFLUENTS

PATHWAY - AIR-GRASS-COWS-MILK (CONTAMINATED FORAGE)								AGE GROUP - INFANT
NUCLIDE	ORGAN DOSE FACTORS (SQ.METER-MREM/YR PER UCI/SEC)							
	BONE	LIVER	THYROID	KIDNEY	LUNG	GI-LLI	SKIN	TOTAL BODY
H-3	0.	2.37E+03	2.37E+03	1.04E+03	2.37E+03	2.37E+03	0.	2.37E+03
C-14	6.55E+05	6.55E+05	6.55E+05	7.55E+04	6.55E+05	6.55E+05	0.	6.55E+05
P-32	1.82E+10	1.14E+09	0.	0.	0.	2.05E+09	0.	7.05E+08
CR-51	0.	0.	1.82E+04	6.72E+03	4.04E+04	7.66E+06	0.	3.05E+04
MN-54	0.	8.96E+06	0.	2.67E+06	0.	2.74E+07	0.	1.71E+06
FE-59	3.17E+07	7.52E+07	0.	0.	2.09E+07	2.48E+08	0.	2.86E+07
CO-57	0.	1.36E+06	0.	0.	0.	3.46E+07	0.	2.27E+06
CO-58	0.	2.55E+07	0.	0.	0.	6.60E+07	0.	6.24E+07
CO-60	0.	8.73E+07	0.	0.	0.	2.16E+08	0.	2.09E+08
NI-63	7.16E+09	4.97E+08	0.	0.	0.	1.04E+08	0.	2.40E+08
ZN-65	1.46E+09	4.65E+09	0.	3.11E+09	0.	2.93E+09	0.	2.10E+09
RB-86	0.	2.77E+09	0.	0.	0.	5.45E+08	0.	1.29E+09
SR-89	1.47E+10	0.	0.	0.	0.	2.75E+08	0.	4.22E+08
SR-90	1.65E+11	0.	0.	0.	0.	1.61E+09	0.	4.21E+10
Y-91	8.12E+04	0.	0.	0.	0.	5.37E+06	0.	2.16E+03
ZR-95	2.12E+05	9.41E+04	0.	1.86E+04	0.	7.47E+07	0.	5.56E+04
NB-95	5.49E+05	2.47E+05	0.	4.84E+04	0.	1.98E+08	0.	1.45E+05
RU-103	8.30E+03	0.	0.	4.16E+03	0.	1.04E+05	0.	2.86E+03
RU-106	2.01E+05	0.	0.	4.20E+04	0.	1.56E+06	0.	2.46E+04
AG-110M	6.21E+07	5.75E+07	0.	1.13E+08	0.	2.35E+10	0.	3.42E+07
CD-115M	0.	1.33E+06	0.	1.05E+06	0.	5.58E+07	0.	4.24E+04

BASED ON 1 μCi/SEC RELEASE RATE OF EACH ISOTOPE AND A VALUE OF 1 FOR χ/Q, χ_d/Q, AND D/Q.

NOTE - THE UNITS FOR C-14 AND H-3 ARE (MREM/YR PER UCI/CU.METER)

3.0 RADIOACTIVE GASEOUS EFFLUENTS

ENVIRONMENTAL PATHWAY DOSE CONVERSION FACTORS FOR GASEOUS EFFLUENTS

PATHWAY - AIR-GRASS-COWS-MILK (CONTAMINATED FORAGE)								AGE GROUP - INFANT
NUCLIDE	ORGAN DOSE FACTORS (SQ.METER-MREM/YR PER UCI/SEC)							
	BONE	LIVER	THYROID	KIDNEY	LUNG	GI-LLI	SKIN	TOTAL BODY
SN-123	0.	0.	0.	0.	0.	0.	0.	0.
SN-126	1.75E+09	3.48E+07	1.01E+07	0.	4.97E+06	1.16E+09	0.	5.25E+07
SB-124	2.75E+07	5.19E+05	6.64E+04	0.	2.13E+07	7.78E+08	0.	1.09E+07
SB-125	3.59E+07	3.17E+06	2.93E+06	3.96E+06	2.83E+09	2.43E+08	0.	6.62E+06
TE-125M	1.57E+08	5.30E+07	5.18E+07	7.05E+07	0.	7.57E+07	0.	2.10E+07
TE-127M	5.54E+07	1.93E+07	1.79E+07	2.00E+08	0.	3.24E+08	0.	7.38E+06
TE-129M	5.87E+08	2.02E+08	2.21E+08	2.70E+08	0.	3.54E+08	0.	8.95E+07
I-130	4.54E+05	1.35E+06	1.71E+08	2.09E+06	0.	1.15E+06	0.	5.29E+05
I-131	2.59E+09	3.09E+09	9.94E+11	7.74E+08	0.	1.16E+08	0.	1.81E+09
I-132	1.78E-01	4.76E-01	6.26E+01	7.58E-01	0.	8.93E-02	0.	1.69E-01
I-133	3.75E+07	5.48E+07	1.30E+10	1.29E+07	0.	9.74E+06	0.	1.66E+07
I-134	0.	0.	1.06E-09	0.	0.	0.	0.	0.
I-135	1.49E+04	3.94E+04	5.15E+06	6.26E+04	8.07E-02	4.41E+04	0.	1.44E+04
CS-134	4.48E+10	7.97E+10	0.	4.65E+09	9.12E+09	1.90E+08	0.	6.75E+09
CS-136	2.78E+08	1.10E+09	0.	6.11E+08	8.37E+07	1.25E+08	0.	7.90E+08
CS-137	6.44E+10	7.21E+10	0.	3.66E+09	8.69E+09	1.86E+08	0.	4.14E+09
BA-140	2.45E+08	2.47E+05	0.	1.22E+04	1.51E+05	8.13E+06	0.	1.27E+07
CE-141	2.65E+05	1.62E+05	0.	9.72E+03	0.	7.87E+07	0.	1.90E+04
CE-144	2.10E+07	8.29E+06	0.	5.67E+05	0.	8.66E+08	0.	1.13E+06
PR-143	1.69E+02	6.80E+01	0.	3.92E+01	0.	7.41E+05	0.	8.40E+00
ND-147	1.23E+02	1.19E+02	0.	7.21E+01	0.	5.63E+05	0.	7.81E+00

BASED ON 1 μCi/SEC RELEASE RATE OF EACH ISOTOPE AND A VALUE OF 1 FOR χ/Q, χ_d/Q, AND D/Q.

NOTE - THE UNITS FOR C-14 AND H-3 ARE (MREM/YR PER UCI/CU.METER)

3.0 RADIOACTIVE GASEOUS EFFLUENTS

ENVIRONMENTAL PATHWAY DOSE CONVERSION FACTORS FOR GASEOUS EFFLUENTS

PATHWAY - AIR-GRASS-GOATS-MILK (CONTAMINATED FORAGE)								AGE GROUP - ADULT
NUCLIDE	ORGAN DOSE FACTORS (SQ.METER-MREM/YR PER UCI/SEC)							
	BONE	LIVER	THYROID	KIDNEY	LUNG	GI-LLI	SKIN	TOTAL BODY
H-3	0.	1.99E+03	1.99E+03	1.99E+03	1.99E+03	1.99E+03	0.	1.99E+03
C-14	3.63E+05	7.28E+04	7.28E+04	7.28E+04	7.28E+04	7.28E+04	0.	7.28E+04
P-32	2.05E+10	1.29E+09	0.	0.	0.	2.31E+09	0.	7.94E+08
CR-51	0.	0.	2.05E+08	7.58E+02	4.56E+03	8.64E+05	0.	3.43E+03
MN-54	0.	1.01E+06	0.	3.00E+05	0.	3.09E+06	0.	1.93E+05
FE-59	3.87E+05	9.18E+05	0.	0.	2.55E+05	3.03E+06	0.	3.50E+05
CO-57	0.	1.54E+05	0.	0.	0.	3.90E+06	0.	2.55E+05
CO-58	0.	5.67E+05	0.	0.	0.	1.15E+07	0.	1.27E+06
CO-60	0.	1.98E+06	0.	0.	0.	3.70E+07	0.	4.34E+06
NI-63	8.07E+08	5.60E+07	0.	0.	0.	1.17E+07	0.	2.71E+07
ZN-65	1.65E+08	5.24E+08	0.	3.50E+08	0.	3.30E+08	0.	2.37E+08
RB-86	0.	3.12E+08	0.	0.	0.	6.15E+07	0.	1.45E+08
SR-89	3.06E+09	0.	0.	0.	0.	4.89E+08	0.	8.76E+07
SR-90	9.87E+10	0.	0.	0.	0.	1.32E+09	0.	2.41E+10
Y-91	1.03E+03	0.	0.	0.	0.	5.68E+05	0.	2.77E+01
ZR-95	3.82E+03	2.10E+03	0.	2.10E+03	0.	1.26E+07	0.	8.34E+02
NB-95	9.92E+03	5.51E+03	0.	5.46E+03	0.	3.34E+07	0.	2.173+03
RU-103	1.23E+02	0.	0.	4.69E+02	0.	1.43E+04	0.	5.30E+01
RU-106	2.45E+03	0.	0.	4.73E+03	0.	1.58E+05	0.	3.10E+02
AG-110M	7.00E+06	6.48E+06	0.	1.27E+07	0.	2.64E+09	0.	3.85E+06
CD-115M	0.	1.50E+05	0.	1.19E+05	0.	6.29E+06	0.	4.78E+03

BASED ON 1 μCi/SEC RELEASE RATE OF EACH ISOTOPE AND A VALUE OF 1 FOR χ/Q, χ_d/Q, AND D/Q.

NOTE - THE UNITS FOR C-14 AND H-3 ARE (MREM/YR PER UCI/CU.METER)

3.0 RADIOACTIVE GASEOUS EFFLUENTS

ENVIRONMENTAL PATHWAY DOSE CONVERSION FACTORS FOR GASEOUS EFFLUENTS

PATHWAY - AIR-GRASS-GOATS-MILK (CONTAMINATED FORAGE)								AGE GROUP - ADULT
NUCLIDE	ORGAN DOSE FACTORS (SQ.METER-MREM/YR PER UCI/SEC)							
	BONE	LIVER	THYROID	KIDNEY	LUNG	GI-LLI	SKIN	TOTAL BODY
SN-123	0.	0.	0.	0.	0.	0.	0.	0.
SN-126	1.97E+08	3.92E+06	1.15E+06	0.	5.61E+05	1.31E+08	0.	5.92E+06
SB-124	3.10E+06	5.85E+04	7.49E+03	0.	2.40E+06	8.77E+07	0.	1.22E+06
SB-125	3.16E+06	7.28E+04	3.58E+04	4.47E+05	3.19E+08	2.74E+07	0.	6.29E+05
TE-125M	1.96E+06	7.10E+05	5.89E+05	7.95E+06	0.	7.81E+06	0.	2.62E+05
TE-127M	5.57E+06	1.94E+06	1.47E+06	2.26E+07	0.	2.52E+07	0.	6.86E+05
TE-129M	7.27E+06	2.72E+06	2.51E+06	3.04E+07	0.	3.65E+07	0.	1.15E+06
I-130	5.12E+05	1.52E+06	1.93E+08	2.36E+06	0.	1.30E+06	0.	5.96E+05
I-131	3.56E+08	5.10E+08	1.67E+11	8.72E+08	0.	1.34E+08	0.	2.92E+08
I-132	2.00E-01	5.36E-01	7.06E+01	8.55E-01	0.	1.01E-01	0.	1.91E-01
I-133	4.80E+06	8.32E+06	1.60E+09	1.45E+07	0.	7.32E+06	0.	2.54E+06
I-134	0.	0.	1.20E-09	0.	0.	0.	0.	0.
I-135	1.68E+04	4.44E+04	5.80E+06	7.05E+04	2.28E-01	4.97E+04	0.	1.63E+04
CS-134	1.78E+10	4.04E+10	0.	1.31E+10	4.34E+09	7.06E+08	0.	3.30E+10
CS-136	7.84E+08	3.09E+09	0.	1.72E+09	2.36E+08	3.52E+08	0.	2.23E+09
CS-137	2.22E+10	3.03E+10	0.	1.03E+10	3.42E+09	5.83E+08	0.	1.99E+10
BA-140	3.23E+06	4.05E+03	0.	1.38E+03	2.32E+03	6.84E+06	0.	2.13E+05
CE-141	3.49E+03	2.36E+03	0.	1.10E+03	0.	9.02E+06	0.	2.68E+02
CE-144	2.58E+05	1.08E+05	0.	6.39E+04	0.	8.71E+07	0.	1.38E+04
PR-143	1.91E+01	7.67E+00	0.	4.42E+00	0.	8.35E+04	0.	9.47E-01
ND-147	1.39E+01	1.34E+01	0.	8.13E+00	0.	6.35E+04	0.	8.81E-01

BASED ON 1 μCi/SEC RELEASE RATE OF EACH ISOTOPE AND A VALUE OF 1 FOR χ/Q, χ_d/Q, AND D/Q.

NOTE - THE UNITS FOR C-14 AND H-3 ARE (MREM/YR PER UCI/CU.METER)

3.0 RADIOACTIVE GASEOUS EFFLUENTS

ENVIRONMENTAL PATHWAY DOSE CONVERSION FACTORS FOR GASEOUS EFFLUENTS

PATHWAY - AIR-GRASS-GOATS-MILK (CONTAMINATED FORAGE)								AGE GROUP - TEENAGER
NUCLIDE	ORGAN DOSE FACTORS (SQ.METER-MREM/YR PER UCI/SEC)							
	BONE	LIVER	THYROID	KIDNEY	LUNG	GI-LLI	SKIN	TOTAL BODY
H-3	0.	2.03E+03	2.03E+03	2.56E+03	2.03E+03	2.03E+03	0.	2.03E+03
C-14	1.25E+05	1.25E+05	1.25E+05	9.39E+04	1.25E+05	1.25E+05	0.	1.25E+05
P-32	2.65E+10	1.66E+09	0.	0.	0.	2.98E+09	0.	1.03E+09
CR-51	0.	0.	2.65E+03	9.78E+02	5.88E+03	1.11E+06	0.	4.43E+03
MN-54	0.	1.30E+06	0.	3.88E+05	0.	3.99E+06	0.	2.49E+05
FE-59	4.99E+05	1.19E+06	0.	0.	3.29E+05	3.91E+06	0.	4.51E+05
CO-57	0.	1.98E+05	0.	0.	0.	5.03E+06	0.	3.30E+05
CO-58	0.	9.72E+05	0.	0.	0.	1.31E+07	0.	2.22E+06
CO-60	0.	3.28E+06	0.	0.	0.	3.93E+07	0.	7.48E+06
NI-63	1.04E+09	7.23E+07	0.	0.	0.	1.51E+07	0.	3.49E+07
ZN-65	2.13E+08	6.76E+08	0.	4.52E+08	0.	4.26E+08	0.	3.06E+08
RB-86	0.	4.02E+08	0.	0.	0.	7.93E+07	0.	1.88E+08
SR-89	5.87E+09	0.	0.	0.	0.	6.37E+08	0.	1.69E+08
SR-90	1.74E+11	0.	0.	0.	4.05E+05	3.68E+09	0.	4.30E+10
Y-91	1.85E+03	0.	0.	0.	0.	7.11E+05	0.	4.94E+01
ZR-95	5.74E+03	3.41E+03	0.	2.70E+03	0.	1.38E+07	0.	1.93E+03
NB-95	1.49E+04	8.96E+03	0.	7.05E+03	0.	3.66E+07	0.	5.05E+03
RU-103	2.03E+02	0.	0.	6.05E+02	0.	1.58E+04	0.	9.08E+01
RU-106	4.59E+03	0.	0.	6.11E+03	0.	2.08E+05	0.	5.78E+02
AG-110M	9.04E+06	8.36E+06	0.	1.64E+07	0.	3.41E+09	0.	4.97E+06
CD-115M	0.	1.93E+05	0.	1.53E+05	0.	8.12E+06	0.	6.17E+03

BASED ON 1 μCi/SEC RELEASE RATE OF EACH ISOTOPE AND A VALUE OF 1 FOR χ/Q, χ_d/Q, AND D/Q.

NOTE - THE UNITS FOR C-14 AND H-3 ARE (MREM/YR PER UCI/CU.METER)

3.0 RADIOACTIVE GASEOUS EFFLUENTS

ENVIRONMENTAL PATHWAY DOSE CONVERSION FACTORS FOR GASEOUS EFFLUENTS

PATHWAY - AIR-GRASS-GOATS-MILK (CONTAMINATED FORAGE)								AGE GROUP - TEENAGER
NUCLIDE	ORGAN DOSE FACTORS (SQ.METER-MREM/YR PER UCI/SEC)							
	BONE	LIVER	THYROID	KIDNEY	LUNG	GI-LLI	SKIN	TOTAL BODY
SN-123	0.	0.	0.	0.	0.	0.	0.	0.
SN-126	2.54E+08	5.05E+06	1.48E+06	0.	7.23E+05	1.69E+08	0.	7.64E+06
SB-124	4.00E+06	7.54E+04	9.66E+03	0.	3.10E+06	1.13E+08	0.	1.58E+06
SB-125	4.14E+06	1.15E+05	6.06E+04	5.77E+05	4.12E+08	3.54E+07	0.	8.19E+05
TE-125M	3.61E+06	1.29E+06	1.02E+06	1.03E+07	0.	1.01E+07	0.	4.78E+05
TE-127M	7.23E+06	2.52E+06	1.91E+06	2.92E+07	0.	3.63E+07	0.	8.94E+05
TE-129M	1.35E+07	5.02E+06	4.34E+06	3.92E+07	0.	4.72E+07	0.	2.13E+06
I-130	6.61E+05	1.96E+06	2.49E+08	3.04E+06	0.	1.68E+06	0.	7.69E+05
I-131	6.15E+08	8.68E+08	2.50E+11	1.13E+09	0.	1.64E+08	0.	5.17E+08
I-132	2.59E-01	6.92E-01	9.11E+01	1.10E+00	0.	1.30E-01	0.	2.46E-01
I-133	8.79E+06	1.49E+07	2.71E+09	1.88E+07	0.	1.08E+07	0.	4.59E+06
I-134	0.	0.	1.55E-09	0.	0.	0.	0.	0.
I-135	2.17E+04	5.73E+04	7.49E+06	9.10E+04	2.94E-01	6.41E+04	0.	2.10E+04
CS-134	2.88E+10	6.83E+10	0.	1.69E+10	8.27E+09	7.88E+08	0.	3.19E+10
CS-136	1.01E+09	3.99E+09	0.	2.22E+09	3.05E+08	4.54E+08	0.	2.87E+09
CS-137	3.84E+10	5.16E+10	0.	1.33E+10	6.85E+09	6.88E+08	0.	1.81E+10
BA-140	5.81E+06	7.14E+03	0.	1.78E+03	4.78E+03	1.10E+06	0.	3.73E+05
CE-141	6.06E+03	4.07E+03	0.	1.41E+03	0.	1.10E+07	0.	4.66E+02
CE-144	4.92E+05	2.02E+05	0.	8.24E+04	0.	1.16E+08	0.	2.61E+04
PR-143	2.46E+01	9.90E+00	0.	5.70E+00	0.	1.08E+05	0.	1.22E+00
ND-147	1.79E+01	1.73E+01	0.	1.05E+01	0.	8.19E+04	0.	1.14E+00

BASED ON 1 μCi/SEC RELEASE RATE OF EACH ISOTOPE AND A VALUE OF 1 FOR χ/Q, χ_d/Q, AND D/Q.

NOTE - THE UNITS FOR C-14 AND H-3 ARE (MREM/YR PER UCI/CU.METER)

3.0 RADIOACTIVE GASEOUS EFFLUENTS

ENVIRONMENTAL PATHWAY DOSE CONVERSION FACTORS FOR GASEOUS EFFLUENTS

PATHWAY - AIR-GRASS-GOATS-MILK (CONTAMINATED FORAGE)								AGE GROUP - CHILD
NUCLIDE	ORGAN DOSE FACTORS (SQ.METER-MREM/YR PER UCI/SEC)							
	BONE	LIVER	THYROID	KIDNEY	LUNG	GI-LLI	SKIN	TOTAL BODY
H-3	0.	3.20E+03	3.20E+03	2.11E+03	3.20E+03	3.20E+03	0.	3.20E+03
C-14	3.08E+05	3.08E+05	3.08E+05	7.75E+04	3.08E+05	3.08E+05	0.	3.08E+05
P-32	2.19E+10	1.37E+09	0.	0.	0.	2.46E+09	0.	8.46E+08
CR-51	0.	0.	2.19E+03	8.07E+02	4.85E+03	9.19E+05	0.	3.66E+03
MN-54	0.	1.08E+06	0.	3.20E+05	0.	3.29E+06	0.	2.05E+05
FE-59	4.12E+05	9.78E+05	0.	0.	2.72E+05	3.23E+06	0.	3.72E+05
CO-57	0.	1.64E+05	0.	0.	0.	4.15E+06	0.	2.72E+05
CO-58	0.	1.50E+05	0.	0.	0.	8.90E+06	0.	4.51E+06
CO-60	0.	5.06E+06	0.	0.	0.	2.80E+07	0.	1.52E+07
NI-63	8.60E+08	5.96E+07	0.	0.	0.	1.24E+07	0.	2.88E+07
ZN-65	1.76E+08	5.57E+08	0.	3.73E+08	0.	3.51E+08	0.	2.52E+08
RB-86	0.	3.32E+08	0.	0.	0.	6.54E+07	0.	1.55E+08
SR-89	1.45E+10	0.	0.	0.	0.	5.43E+08	0.	4.16E+08
SR-90	2.37E+11	0.	0.	0.	0.	3.16E+09	0.	6.02E+10
Y-91	4.56E+03	0.	0.	0.	0.	6.06E+05	0.	1.22E+02
ZR-95	1.27E+04	5.37E+03	0.	2.23E+03	0.	9.22E+06	0.	3.96E+03
NB-95	3.30E+04	1.41E+04	0.	5.81E+03	0.	2.44E+07	0.	1.04E+04
RU-103	4.79E+02	0.	0.	4.99E+02	0.	1.26E+04	0.	1.94E+02
RU-106	1.13E+04	0.	0.	5.04E+03	0.	1.75E+05	0.	1.40E+03
AG-110M	7.45E+06	6.90E+06	0.	1.36E+07	0.	2.81E+09	0.	4.10E+06
CD-115M	0.	1.59E+05	0.	1.26E+05	0.	6.70E+06	0.	5.09E+03

BASED ON 1 μCi/SEC RELEASE RATE OF EACH ISOTOPE AND A VALUE OF 1 FOR χ/Q, χ_d/Q, AND D/Q.

NOTE - THE UNITS FOR C-14 AND H-3 ARE (MREM/YR PER UCI/CU.METER)

3.0 RADIOACTIVE GASEOUS EFFLUENTS

ENVIRONMENTAL PATHWAY DOSE CONVERSION FACTORS FOR GASEOUS EFFLUENTS

PATHWAY - AIR-GRASS-GOATS-MILK (CONTAMINATED FORAGE)								AGE GROUP - CHILD
NUCLIDE	ORGAN DOSE FACTORS (SQ.METER-MREM/YR PER UCI/SEC)							
	BONE	LIVER	THYROID	KIDNEY	LUNG	GI-LLI	SKIN	TOTAL BODY
SN-123	0.	0.	0.	0.	0.	0.	0.	0.
SN-126	2.10E+08	4.17E+06	1.22E+06	0.	5.97E+05	1.40E+08	0.	6.30E+06
SB-124	3.30E+06	6.22E+04	7.97E+03	0.	2.56E+06	9.33E+07	0.	1.30E+06
SB-125	3.75E+06	1.70E+05	1.43E+05	4.76E+05	3.40E+08	2.92E+07	0.	7.19E+05
TE-125M	8.85E+06	2.40E+06	2.49E+06	8.46E+06	0.	8.54E+06	0.	1.18E+06
TE-127M	6.21E+06	2.14E+06	1.75E+06	2.40E+07	0.	3.58E+07	0.	7.92E+05
TE-129M	3.32E+07	9.27E+06	1.06E+07	3.23E+07	0.	4.00E+07	0.	5.15E+06
I-130	5.45E+05	1.61E+06	2.05E+08	2.51E+06	0.	1.38E+06	0.	6.35E+05
I-131	1.48E+09	1.52E+09	4.94E+11	9.28E+08	0.	1.30E+08	0.	1.15E+09
I-132	2.18E-01	5.71E-01	7.51E+01	9.10E-01	0.	1.07E-01	0.	2.03E-01
I-133	2.14E+07	2.64E+07	6.36E+09	1.55E+07	0.	1.07E+07	0.	1.04E+07
I-134	0.	0.	1.27E-09	0.	0.	0.	0.	0.
I-135	1.79E+04	4.72E+04	6.18E+06	7.51E+04	2.42E-01	5.29E+04	0.	1.73E+04
CS-134	6.50E+10	1.10E+11	0.	1.39E+10	1.22E+10	5.92E+08	0.	2.33E+10
CS-136	8.34E+08	3.29E+09	0.	1.83E+09	2.51E+08	3.74E+08	0.	2.37E+09
CS-137	9.28E+10	8.93E+10	0.	1.10E+10	1.05E+10	5.44E+08	0.	1.33E+10
BA-140	1.48E+07	1.23E+04	0.	1.48E+03	7.31E+03	9.30E+05	0.	8.21E+05
CE-141	1.49E+04	7.46E+03	0.	1.17E+03	0.	9.36E+06	0.	1.11E+03
CE-144	1.20E+06	3.76E+05	0.	6.80E+04	0.	9.78E+07	0.	6.41E+04
PR-143	2.03E+01	8.16E+00	0.	4.70E+00	0.	8.89E+04	0.	1.01E+00
ND-147	1.47E+01	1.42E+01	0.	8.66E+00	0.	6.75E+04	0.	9.38E-01

BASED ON 1 μCi/SEC RELEASE RATE OF EACH ISOTOPE AND A VALUE OF 1 FOR χ/Q, χ_d/Q, AND D/Q.

NOTE - THE UNITS FOR C-14 AND H-3 ARE (MREM/YR PER UCI/CU.METER)

3.0 RADIOACTIVE GASEOUS EFFLUENTS

ENVIRONMENTAL PATHWAY DOSE CONVERSION FACTORS FOR GASEOUS EFFLUENTS

PATHWAY - AIR-GRASS-GOATS-MILK (CONTAMINATED FORAGE)								AGE GROUP - INFANT
NUCLIDE	ORGAN DOSE FACTORS (SQ.METER-MREM/YR PER UCI/SEC)							
	BONE	LIVER	THYROID	KIDNEY	LUNG	GI-LLI	SKIN	TOTAL BODY
H-3	0.	4.84E+03	4.84E+03	2.11E+03	4.84E+03	4.84E+03	0.	4.84E+03
C-14	6.55E+05	6.55E+05	6.55E+05	7.75E+04	6.55E+05	6.55E+05	0.	6.55E+05
P-32	2.19E+10	1.37E+09	0.	0.	0.	2.46E+09	0.	8.46E+08
CR-51	0.	0.	2.19E+03	8.07E+02	4.85E+03	9.19E+05	0.	3.66E+03
MN-54	0.	1.08E+06	0.	3.20E+05	0.	3.29E+06	0.	2.05E+05
FE-59	4.12E+05	9.78E+05	0.	0.	2.72E+05	3.23E+06	0.	3.72E+05
CO-57	0.	1.64E+05	0.	0.	0.	4.15E+06	0.	2.72E+05
CO-58	0.	3.06E+06	0.	0.	0.	7.92E+06	0.	7.49E+06
CO-60	0.	1.05E+07	0.	0.	0.	2.59E+07	0.	2.51E+07
NI-63	8.60E+08	5.96E+07	0.	0.	0.	1.24E+07	0.	2.88E+07
ZN-65	1.76E+08	5.57E+08	0.	3.73E+08	0.	3.51E+08	0.	2.52E+08
RB-86	0.	3.32E+08	0.	0.	0.	6.54E+07	0.	1.55E+08
SR-89	3.09E+10	0.	0.	0.	0.	5.77E+08	0.	8.87E+08
SR-90	3.46E+11	0.	0.	0.	0.	3.35E+09	0.	8.83E+10
Y-91	9.74E+03	0.	0.	0.	0.	6.45E+05	0.	2.60E+02
ZR-95	2.54E+04	1.13E+04	0.	2.23E+03	0.	8.95E+06	0.	6.67E+03
NB-95	6.59E+04	2.97E+04	0.	5.81E+03	0.	2.37E+07	0.	1.75E+04
RU-103	9.96E+02	0.	0.	4.99E+02	0.	1.24E+04	0.	3.43E+02
RU-106	2.41E+04	0.	0.	5.04E+03	0.	1.87E+05	0.	2.96E+03
AG-110M	7.45E+06	6.90E+06	0.	1.36E+07	0.	2.81E+09	0.	4.10E+06
CD-115M	0.	1.59E+05	0.	1.26E+05	0.	6.70E+06	0.	5.09E+03

BASED ON 1 μCi/SEC RELEASE RATE OF EACH ISOTOPE AND A VALUE OF 1 FOR χ/Q, χ_d/Q, AND D/Q.

NOTE - THE UNITS FOR C-14 AND H-3 ARE (MREM/YR PER UCI/CU.METER)

3.0 RADIOACTIVE GASEOUS EFFLUENTS

ENVIRONMENTAL PATHWAY DOSE CONVERSION FACTORS FOR GASEOUS EFFLUENTS

PATHWAY - AIR-GRASS-GOATS-MILK (CONTAMINATED FORAGE)								AGE GROUP - INFANT
NUCLIDE	ORGAN DOSE FACTORS (SQ.METER-MREM/YR PER UCI/SEC)							
	BONE	LIVER	THYROID	KIDNEY	LUNG	GI-LLI	SKIN	TOTAL BODY
SN-123	0.	0.	0.	0.	0.	0.	0.	0.
SN-126	2.10E+08	4.17E+06	1.22E+06	0.	5.97E+05	1.40E+08	0.	6.30E+06
SB-124	3.30E+06	6.22E+04	7.97E+03	0.	2.56E+06	9.33E+07	0.	1.30E+06
SB-125	4.31E+06	3.92E+05	3.52E+05	4.76E+05	3.40E+08	2.92E+07	0.	7.94E+05
TE-125M	1.89E+07	6.36E+06	6.21E+06	8.46E+06	0.	9.09E+06	0.	2.52E+06
TE-127M	6.64E+06	2.31E+06	2.15E+06	2.40E+07	0.	3.88E+07	0.	8.85E+05
TE-129M	7.05E+07	2.42E+07	2.66E+07	3.23E+07	0.	4.25E+07	0.	1.07E+07
I-130	5.45E+05	1.61E+06	2.05E+08	2.51E+06	0.	1.38E+06	0.	6.35E+05
I-131	3.11E+09	3.70E+09	1.19E+12	9.28E+08	0.	1.39E+08	0.	2.17E+09
I-132	2.13E-01	5.71E-01	7.51E+01	9.10E-01	0.	1.07E-01	0.	2.03E-01
I-133	4.50E+07	6.57E+07	1.55E+10	1.55E+07	0.	1.17E+07	0.	1.99E+07
I-134	0.	0.	1.27E-09	0.	0.	0.	0.	0.
I-135	1.79E+04	4.72E+04	6.18E+06	7.51E+04	2.42E-01	5.29E+04	0.	1.73E+04
CS-134	1.33E+11	2.39E+11	0.	1.39E+10	2.74E+10	5.69E+08	0.	2.02E+10
CS-136	8.34E+08	3.29E+09	0.	1.83E+09	2.51E+08	3.74E+08	0.	2.37E+09
CS-137	1.93E+11	2.16E+11	0.	1.10E+10	2.61E+10	5.59E+08	0.	1.24E+10
BA-140	2.95E+07	2.96E+04	0.	1.47E+03	1.81E+04	9.76E+05	0.	1.52E+06
CE-141	3.17E+04	1.95E+04	0.	1.17E+03	0.	9.44E+06	0.	2.28E+03
CE-144	2.52E+06	9.95E+05	0.	6.80E+04	0.	1.04E+08	0.	1.36E+05
PR-143	2.03E+01	8.16E+00	0.	4.70E+00	0.	8.89E+04	0.	1.01E+00
ND-147	1.47E+01	1.42E+01	0.	8.66E+00	0.	6.75E+04	0.	9.38E-01

BASED ON 1 μCi/SEC RELEASE RATE OF EACH ISOTOPE AND A VALUE OF 1 FOR χ/Q, χ_d/Q, AND D/Q.

NOTE - THE UNITS FOR C-14 AND H-3 ARE (MREM/YR PER UCI/CU.METER)

3.0 RADIOACTIVE GASEOUS EFFLUENTS

ENVIRONMENTAL PATHWAY DOSE CONVERSION FACTORS FOR GASEOUS EFFLUENTS

PATHWAY - FRESH AND STORED FRUITS AND VEGETABLES								AGE GROUP - ADULT
NUCLIDE	ORGAN DOSE FACTORS (SQ.METER-MREM/YR PER UCI/SEC)							
	BONE	LIVER	THYROID	KIDNEY	LUNG	GI-LLI	SKIN	TOTAL BODY
H-3	0.	2.86E+03	2.86E+03	2.86E+03	2.86E+03	2.86E+03	0.	2.86E+03
C-14	8.97E+05	1.80E+05	1.80E+05	1.80E+05	1.80E+05	1.80E+05	0.	1.80E+05
P-32	1.41E+09	8.81E+07	0.	0.	0.	1.58E+08	0.	5.44E+07
CR-51	0.	0.	2.78E+04	1.03E+04	6.19E+04	1.17E+07	0.	4.66E+04
MN-54	0.	3.13E+08	0.	9.31E+07	0.	9.58E+08	0.	5.97E+07
FE-59	1.27E+08	3.01E+08	0.	0.	8.37E+07	9.95E+08	0.	1.15E+08
CO-57	0.	1.17E+07	0.	0.	0.	2.97E+08	0.	1.95E+07
CO-58	0.	3.08E+07	0.	0.	0.	6.24E+08	0.	6.90E+07
CO-60	0.	1.68E+08	0.	0.	0.	3.14E+09	0.	3.68E+08
NI-63	1.04E+10	7.22E+08	0.	0.	0.	1.50E+08	0.	3.49E+08
ZN-65	3.18E+08	1.01E+09	0.	6.75E+08	0.	6.35E+08	0.	4.56E+08
RB-86	0.	2.20E+08	0.	0.	0.	4.34E+07	0.	1.03E+08
SR-89	1.00E+10	0.	0.	0.	0.	1.60E+09	0.	2.86E+08
SR-90	6.07E+11	0.	0.	0.	0.	1.61E+10	0.	1.49E+11
Y-91	5.14E+06	0.	0.	0.	0.	2.83E+09	0.	1.38E+05
ZR-95	1.40E+06	5.02E+05	0.	7.21E+05	0.	1.92E+09	0.	3.06E+05
NB-95	1.42E+05	7.90E+04	0.	7.83E+04	0.	4.79E+08	0.	3.10E+04
RU-103	4.84E+06	0.	0.	1.86E+07	0.	5.66E+08	0.	2.09E+06
RU-106	1.93E+08	0.	0.	3.72E+08	0.	1.25E+10	0.	2.43E+07
AG-110M	1.06E+07	9.81E+06	0.	1.93E+07	0.	4.01E+09	0.	5.84E+06
CD-115M	0.	5.17E+07	0.	4.10E+07	0.	2.17E+09	0.	1.65E+06

BASED ON 1 μCi/SEC RELEASE RATE OF EACH ISOTOPE AND A VALUE OF 1 FOR χ/Q, χ_d/Q, AND D/Q.

NOTE - THE UNITS FOR C-14 AND H-3 ARE (MREM/YR PER UCI/CU.METER)

3.0 RADIOACTIVE GASEOUS EFFLUENTS

ENVIRONMENTAL PATHWAY DOSE CONVERSION FACTORS FOR GASEOUS EFFLUENTS

PATHWAY - FRESH AND STORED FRUITS AND VEGETABLES								AGE GROUP - ADULT
NUCLIDE	ORGAN DOSE FACTORS (SQ.METER-MREM/YR PER UCI/SEC)							
	BONE	LIVER	THYROID	KIDNEY	LUNG	GI-LLI	SKIN	TOTAL BODY
SN-123	1.00E-05	1.66E-07	1.41E-07	0.	0.	2.04E-05	0.	2.45E-07
SN-126	6.16E+09	1.37E+08	3.99E+07	0.	5.16E+07	8.84E+09	0.	2.23E+08
SB-124	1.04E+08	1.97E+06	2.51E+05	0.	8.06E+07	2.94E+09	0.	4.10E+07
SB-125	1.94E+08	1.06E+07	7.39E+07	9.77E+07	1.78E+10	1.59E+09	0.	3.73E+07
TE-125M	9.65E+07	3.51E+07	2.91E+07	3.93E+08	0.	3.85E+08	0.	1.29E+07
TE-127M	3.50E+08	1.22E+08	9.18E+07	1.42E+09	0.	1.59E+09	0.	4.31E+07
TE-129M	2.55E+08	9.54E+07	8.79E+07	1.06E+09	0.	1.28E+09	0.	4.05E+07
I-130	3.93E+05	1.16E+06	1.48E+08	1.81E+06	0.	9.98E+05	0.	4.58E+05
I-131	8.83E+07	1.16E+08	3.79E+10	1.98E+08	0.	3.05E+07	0.	6.63E+07
I-132	5.57E+01	1.49E+02	1.96E+04	2.38E-02	0.	2.80E+01	0.	5.29E+01
I-133	2.13E+06	3.69E+06	7.10E+08	6.44E+06	0.	3.24E+06	0.	1.13E+06
I-134	1.03E-04	2.79E-04	3.63E-02	4.45E-04	0.	2.43E-07	0.	9.99E-05
I-135	4.04E+04	1.07E+05	1.40E+07	1.70E+05	6.27E-02	1.19E+05	0.	3.91E+04
CS-134	4.87E+09	1.11E+10	0.	3.61E+09	1.19E+09	1.94E+08	0.	9.09E+09
CS-136	4.20E+07	1.66E+08	0.	9.23E+07	1.27E+07	1.89E+07	0.	1.19E+08
CS-137	6.37E+09	8.70E+09	0.	2.96E+09	9.81E+08	1.67E+08	0.	5.71E+09
BA-140	1.29E+08	1.70E+05	0.	5.50E+04	9.25E+04	8.54E+08	0.	8.48E+06
CE-141	1.98E+05	1.34E+05	0.	6.19E+04	0.	5.09E+08	0.	1.51E+04
CE-144	3.30E+07	1.38E+07	0.	8.16E+06	0.	1.11E+10	0.	1.77E+06
PR-143	6.35E+04	2.55E+04	0.	1.47E+04	0.	2.78E+08	0.	3.15E+03
ND-147	9.68E+04	4.50E+04	0.	3.40E+04	0.	1.95E+08	0.	4.73E-03

BASED ON 1 μCi/SEC RELEASE RATE OF EACH ISOTOPE AND A VALUE OF 1 FOR χ/Q, χ_d/Q, AND D/Q.

NOTE - THE UNITS FOR C-14 AND H-3 ARE (MREM/YR PER UCI/CU.METER)

3.0 RADIOACTIVE GASEOUS EFFLUENTS

ENVIRONMENTAL PATHWAY DOSE CONVERSION FACTORS FOR GASEOUS EFFLUENTS

PATHWAY - Fresh and Stored Fruits and Vegetables
AGE GROUP - TEENAGER

NUCLIDE	ORGAN DOSE (SQ METER - MREH/YR PER UCI/SEC)							
	BONE	LIVER	THYROID	KIDNEY	LUNG	GI-LLI	SKIN	TOTAL BODY
H-3	0.	2.57E+03	2.57E+03	3.24E+03	2.57E+03	2.57E+03	0.	2.57E+03
C-14	2.71E+05	2.71E+05	2.71E+05	2.03E+05	2.71E+05	2.71E+05	0.	2.71E+05
P-32	1.13+09	7.06E+07	0.	0.	0.	1.27E+08	0.	4.36E+07
CR-51	0.	0.	2.74E+04	1.01E+04	6.08E-04	1.15E+07	0.	4.58E+04
MN-54	0.	3.52E+08	0.	1.05E+08	0.	1.08E+09	0.	6.72E+07
FE-59	1.34E+08	3.18E+08	0.	0.	8.80E+07	1.05E+09	0.	1.21E+08
CO-57	0.	1.31E+07	0.	0.	0.	3.34E+08	0.	2.19E+07
CO-54	0.	4.45E+07	0.	0.	0.	6.02E+08	0.	1.02E+08
CO-60	0.	2.44E+08	0.	0.	0.	2.93E+09	0.	5.57E+08
NI-63	1.18E-10	8.18E+08	0.	0.	0.	1.71E+08	0.	3.96E+08
ZN-65	3.57E+08	1.14E+09	0.	7.57E+08	0.	7.13E+08	0.	5.12E+08
RB-86	0.	1.94E+08	0.	0.	0.	3.83E+07	0.	9.06E+07
SR-89	1.58E+10	0.	0.	0.	0.	1.72E+09	0.	4.55E+08
SR-90	9.40E+11	0.	0.	0.	3.36E+09	2.97E+10	0.	2.33E+11
Y-91	7.69E+06	0.	0.	0.	0.	2.95E+09	0.	2.06E+05
ZR-95	1.87E+06	7.03E+05	0.	7.90E+05	0.	1.86E+09	0.	4.66E+05
NB-95	1.69E+05	1.02E+05	0.	8.00E+04	0.	4.15E+08	0.	5.73E+04
RU-103	6.46E+06	0.	0.	1.93E+07	0.	5.04E+08	0.	2.89E+06
RU-106	3.15E+08	0.	0.	4.20E+08	0.	1.43E+10	0.	3.96E+07
AG-110M	1.19E+07	1.10E+07	0.	2.17E+07	0.	4.50E+09	0.	6.56E+06
CD-115M	0.	5.41E+07	0.	4.29E+07	0.	2.28E+09	0.	1.73E+06

BASED ON 1 μCi/SEC RELEASE RATE OF EACH ISOTOPE AND A VALUE OF 1 FOR χ/Q, χ_d/Q, AND D/Q.

NOTE - THE UNITS FOR C-14 AND H-3 ARE (MREM/YR PER UCI/CU.METER)

3.0 RADIOACTIVE GASEOUS EFFLUENTS

ENVIRONMENTAL PATHWAY DOSE CONVERSION FACTORS FOR GASEOUS EFFLUENTS

PATHWAY - Fresh and Stored Fruits and Vegetables
AGE GROUP - TEENAGER

NUCLIDE	ORGAN DOSE (SQ. METER MREH/YR PER UCI/SEC)							
	BONE	LIVER	THYROID	KIDNEY	LUNG	GI-LLI	SKIN	TOTAL BODY
SN-123	9.25E-06	1.53E-07	1.22E-07	0.	0.	1.33E-05	0.	2.28E-07
SN-126	7.79E+09	1.54E+08	4.53E+07	0.	6.01E+07	1.02E+10	0.	2.54E+08
SB-124	1.12E+08	2.11E+06	2.71E+05	0.	8.69E+07	3.17E+09	0.	4.42E+07
SB-125	2.33E+08	1.66E+07	1.16E+07	1.15E+08	2.01E+10	1.82E+09	0.	4.40E+07
TE-125M	1.48E+08	5.30E+07	4.18E+07	4.22E+08	0.	4.14E+08	0.	1.97E+07
TE-127M	3.88E+08	1.36E+08	1.03E+08	1.56E+08	0.	1.95E+09	0.	4.81E+07
TE-129M	3.74E+08	1.39E+08	1.20E+08	1.08E+09	0.	1.31E+09	0.	5.90E+07
I-130	2.58E+05	7.64E+05	9.72E+07	1.19E+06	0.	6.55E+05	0.	3.00E+05
I-131	7.33E+07	1.03E+08	2.99E+10	1.34E+08	0.	1.96E+07	0.	6.17E+07
I-132	3.65E+01	9.77E+01	1.29E+04	1.56E+02	0.	1.84E+01	0.	3.47E+01
I-133	1.98E+06	3.36E+06	6.10E+08	4.23E+06	0.	2.44E+06	0.	1.04E+06
I-134	6.75E-05	1.83E-04	2.38E-02	2.92E-04	0.	1.60E-07	0.	6.56E-05
I-135	2.65E+04	7.00E+04	9.15E+06	1.11E+05	7.12E-02	7.84E+04	0.	2.57E+04
CS-134	6.84E+09	1.65E+10	0.	4.08E+09	2.00E+09	1.90E+08	0.	7.69E+09
CS-136	3.25E+07	1.28E+08	0.	7.13E+07	9.78E+06	1.46E+07	0.	9.21E+07
CS-137	9.68E+09	1.31E+10	0.	3.35E+09	1.73E+09	1.74E+08	0.	4.57E+09
BA-140	1.33E+08	1.78E+05	0.	4.22E+04	1.13E+05	4.94E+08	0.	8.86E+06
CE-141	2.68E+05	1.79E+05	0.	6.25E+04	0.	4.87E+08	0.	2.07E+04
CE-144	5.47E+07	2.25E+07	0.	9.17E+06	0.	1.29E+10	0.	2.91E+06
PR-143	5.00E+04	2.20E+04	0.	1.16E+04	0.	2.19E+08	0.	2.49E+03
ND-147	9.80E+04	3.55E+04	0.	2.97E+04	0.	1.45E+08	0.	4.50E+03

BASED ON 1 μCi/SEC RELEASE RATE OF EACH ISOTOPE AND A VALUE OF 1 FOR χ/Q, χ_d/Q, AND D/Q.

NOTE - THE UNITS FOR C-14 AND H-3 ARE (MREM/YR PER UCI/CU.METER)

3.0 RADIOACTIVE GASEOUS EFFLUENTS

ENVIRONMENTAL PATHWAY DOSE CONVERSION FACTORS FOR GASEOUS EFFLUENTS

PATHWAY - Fresh and Stored Fruits and Vegetables
AGE GROUP - CHILD

NUCLIDE	ORGAN DOSE (SQ.METER-MREM/YR PER UCI/SEC)							
	BONE	LIVER	THYROID	KIDNEY	LUNG	GI-LLI	SKIN	TOTAL BODY
H-3	0.	3.98E+03	3.98E+03	2.62E+03	3.98E+03	3.98E+03	0.	3.98E+03
C-14	6.54E+05	6.54E+05	6.54E+05	1.65E+05	6.54E+05	6.54E+05	0.	6.54E+05
P-32	7.89E+08	4.94E+07	0.	0.	0.	8.87E+07	0.	3.05E+07
CR-51	0.	0.	2.10E+04	7.76E+03	4.67E+04	8.84E+06	0.	3.51E+04
MN-54	0.	2.84E+08	0.	8.45E+07	0.	8.70E+08	0.	5.42E+07
FE-59	1.05E+08	2.50E+08	0.	0.	6.95E+07	8.26E+08	0.	9.52E+07
CO-57	0.	1.06E+07	0.	0.	0.	2.69E+08	0.	1.77E+07
CO-58	0.	6.62E+07	0.	0.	0.	3.94E+08	0.	2.00E+08
CO-60	0.	3.69E+08	0.	0.	0.	2.05E+09	0.	1.11E+09
NI-63	9.54E+09	6.62E+08	0.	0.	0.	1.38E+08	0.	3.20E+08
ZN-65	2.88E+08	9.12E+08	0.	6.10E+08	0.	5.75E+08	0.	4.13E+08
RB-86	0.	1.43E+08	0.	0.	0.	2.82E+07	0.	6.66E+07
SR-89	3.76E+10	0.	0.	0.	0.	1.40E+09	0.	1.08E+09
SR-90	1.26E+12	0.	0.	0.	0.	2.54E+10	0.	3.19E+11
Y-91	1.82E+07	0.	0.	0.	0.	2.42E+09	0.	4.87E+05
ZR-95	4.15E+06	1.09E+06	0.	6.33E+05	0.	1.32E+09	0.	9.43E+05
NB-95	3.55E+05	1.51E+05	0.	6.24E+04	0.	2.26E+08	0.	1.11E+05
RU-103	1.45E+07	0.	0.	1.51E+07	0.	3.81E+08	0.	5.86E+06
RU-106	7.57E+08	0.	0.	3.38E+08	0.	1.18E+10	0.	9.42E+07
AG-110M	9.61E+06	8.89E+06	0.	1.75E+07	0.	3.63E+09	0.	5.29E+06
CD-115M	0.	4.26E+07	0.	3.38E+07	0.	1.79E+09	0.	1.36E+06

BASED ON 1 μCi/SEC RELEASE RATE OF EACH ISOTOPE AND A VALUE OF 1 FOR χ/Q, χ_d/Q, AND D/Q.

NOTE - THE UNITS FOR C-14 AND H-3 ARE (MREM/YR PER UCI/CU.METER)

3.0 RADIOACTIVE GASEOUS EFFLUENTS

ENVIRONMENTAL PATHWAY DOSE CONVERSION FACTORS FOR GASEOUS EFFLUENTS

PATHWAY - Fresh and Stored Fruits and Vegetables
AGE GROUP - CHILD

NUCLIDE	ORGAN DOSE (SQ.METER-MREM/YR PER UCI/SEC)							
	BONE	LIVER	THYROID	KIDNEY	LUNG	GI-LLI	SKIN	TOTAL BODY
SN-123	1.71E-05	2.14E-07	2.26E-07	0.	0.	8.503-06	0.	4.21E-07
SN-126	6.29E+09	1.25E+08	3.66E+07	0.	4.91E+07	8.33E+09	0.	2.06E+08
SB-124	8.90E+07	1.68E+06	2.15E+05	0.	6.90E+07	2.52E+09	0.	3.51E+07
SB-125	2.54E+08	2.86E+07	2.80E+07	9.47E+07	1.62E+10	1.46E+09	0.	4.44E+07
TE-125M	3.50E+08	9.50E+07	9.84E+07	3.35E+08	0.	3.38E+08	0.	4.67E+07
TE-127M	3.25E+08	1.12E+08	9.15E+07	1.26E+09	0.	1.87E+09	0.	4.14E+07
TE-129M	8.69E+08	2.42E+08	2.77E+08	8.43E+08	0.	1.05E+09	0.	1.34E+08
I-130	1.60E+05	4.73E+05	6.02E+07	7.35E+05	0.	4.05E+05	0.	1.86E+05
I-131	1.36E+08	1.39E+08	4.52E+10	8.48E+07	0.	1.19E+07	0.	1.05E+08
I-132	2.26E+01	6.05E+01	7.97E+03	9.65E+01	0.	1.14E+01	0.	2.15E+01
I-133	3.61E+06	4.46E+06	1.08E+09	2.62E+06	0.	1.81E+06	0.	1.75E+06
I-134	4.18E+05	1.14E+04	1.47E-02	1.81E-04	0.	9.89E-08	0.	4.06E-05
I-135	1.64E+04	4.33E+04	5.67E+06	6.89E+04	5.75E-02	4.85E+04	0.	1.59E+04
CS-134	1.54E+10	2.59E+10	0.	3.29E+09	2.88E+09	1.40E+08	0.	5.51E+09
CS-136	2.23E+07	8.80E+07	0.	4.90E+07	6.72E+06	1.00E+07	0.	6.34E+07
CS-137	2.28E+10	2.21E+10	0.	2.72E+09	2.59E+09	1.34E+08	0.	3.29E+09
BA-140	2.76E+08	2.54E+05	0.	2.89E+04	1.44E+05	3.60E+08	0.	1.62E+07
CE-141	6.21E+05	3.10E+05	0.	4.85E+04	0.	3.89E+08	0.	4.62E+04
CE-144	1.31E+08	4.10E+07	0.	7.39E+06	0.	1.06E+10	0.	6.97E+06
PR-143	3.48E+04	1.40E+04	0.	8.03E+03	0.	1.52E+08	0.	1.72E+03
ND-147	7.61E+04	2.46E+04	0.	2.17E+04	0.	9.80E+07	0.	3.40E+03

BASED ON 1 μCi/SEC RELEASE RATE OF EACH ISOTOPE AND A VALUE OF 1 FOR χ/Q, χ_d/Q, AND D/Q.

NOTE - THE UNITS FOR C-14 AND H-3 ARE (MREM/YR PER UCI/CU.METER)

3.0 RADIOACTIVE GASEOUS EFFLUENTS

ENVIRONMENTAL PATHWAY DOSE CONVERSION FACTORS FOR GASEOUS EFFLUENTS

PATHWAY - Stored Fruits and Vegetables
AGE GROUP - ADULT

NUCLIDE	ORGAN DOSE FACTORS (SQ.METER-MREM/YR PER UCI/SEC)							
	BONE	LIVER	THYROID	KIDNEY	LUNG	GI-LLI	SKIN	TOTAL BODY
H-3	0.	2.46E+03	2.46E+03	2.46E+03	2.46E+03	2.46E+03	0.	2.46E+03
C-14	7.72E+05	1.55E+05	1.55E+05	1.55E+05	1.55E+05	1.55E+05	0.	1.55E+05
P-32	3.67E+08	2.30E+07	0.	0.	0.	4.13E+07	0.	1.42E+07
CR-51	0.	0.	1.63E+04	6.03E+03	3.63E+04	6.87E+06	0.	2.73E+04
MN-54	0.	2.64E+08	0.	7.86E+07	0.	8.09E+08	0.	5.04E+07
FE-59	9.06E+07	2.15E+08	0.	0.	5.97E+07	7.10E+08	0.	8.18E+07
CO-57	0.	9.85E+06	0.	0.	0.	2.50E+08	0.	1.64E+07
CO-58	0.	2.39E+07	0.	0.	0.	4.84E+08	0.	5.36E+07
CO-60	0.	1.44E+08	0.	0.	0.	2.69E+09	0.	3.16E+08
NI-63	8.95E+09	6.21E+08	0.	0.	0.	1.29E+08	0.	3.00E+08
ZN-65	2.67E+08	8.46E+08	0.	5.66E+08	0.	5.33E+08	0.	3.83E+08
RB-86	0.	9.00E+07	0.	0.	0.	1.78E+07	0.	4.20E+07
SR-89	7.34E+09	0.	0.	0.	0.	1.17E+09	0.	2.10E+08
SR-90	5.22E+11	0.	0.	0.	0.	1.40E+10	0.	1.28E+11
Y-91	3.88E+06	0.	0.	0.	0.	2.14E+09	0.	1.04E+05
ZR-95	1.11E+06	4.04E+05	0.	5.72E+05	0.	1.59E+09	0.	2.42E+05
NB-95	9.35E+04	5.19E+04	0.	5.15E+04	0.	3.15E+08	0.	2.04E+04
RU-103	3.34E+06	0.	0.	1.28E+07	0.	3.90E+08	0.	1.44E+06
RU-106	1.63E+08	0.	0.	3.15E+08	0.	1.06E+10	0.	2.06E+07
AG-110M	8.92E+06	8.25E+06	0.	1.62E+07	0.	3.37E+09	0.	4.91E+06
CD-115M	0.	3.64E+07	0.	2.89E+07	0.	1.53E+09	0.	1.16E+06

BASED ON 1 μCi/SEC RELEASE RATE OF EACH ISOTOPE AND A VALUE OF 1 FOR χ/Q, χ_d/Q, AND D/Q.

3.0 RADIOACTIVE GASEOUS EFFLUENTS

ENVIRONMENTAL PATHWAY DOSE CONVERSION FACTORS FOR GASEOUS EFFLUENTS

PATHWAY - Stored Fruits and Vegetables
AGE GROUP - ADULT

NUCLIDE	ORGAN DOSE FACTORS (SQ.METER-MREM/YR PER UCI/SEC)							
	BONE	LIVER	THYROID	KIDNEY	LUNG	GI-LLI	SKIN	TOTAL BODY
SN-123	0.	0.	0.	0.	0.	0.	0.	0.
SN-126	5.91E+09	1.18E+08	3.44E+07	0.	4.73E+07	7.99E+09	0.	1.94E+08
SB-124	7.88E+07	1.49E+06	1.90E+05	0.	6.11E+07	2.23E+09	0.	3.11E+07
SB-125	1.68E+08	9.84E+06	6.99E+06	9.26E+07	1.52E+10	1.37E+09	0.	3.23E+07
TE-125M	7.27E+07	2.64E+07	2.19E+07	2.96E+08	0.	2.90E+08	0.	9.74E+06
TE-127M	2.82E+08	9.87E+07	7.41E+07	1.15E+09	0.	1.28E+09	0.	3.48E+07
TE-124M	1.25E+08	6.20E+07	5.72E+07	6.92E+08	0.	8.32E+08	0.	2.63E+07
I-130	0.	0.	0.	0.	0.	0.	0.	0.
I-131	2.99E+06	4.28E+06	1.40E+09	7.33E+06	0.	1.13E+06	0.	2.45E+06
I-132	0.	0.	0.	0.	0.	0.	0.	0.
I-133	0.	0.	0.	0.	0.	0.	0.	0.
I-134	0.	0.	0.	0.	0.	0.	0.	0.
I-135	5.14E-01	4.74E-01	0.	1.80E-01	5.40E-02	1.11E-02	0.	2.11E-01
CS-134	3.99E+09	9.50E+09	0.	3.08E+09	1.02E+09	1.66E+08	0.	7.76E+09
CS-136	8.82E+06	3.48E+07	0.	1.94E+07	2.66E+06	3.96E+06	0.	2.51E+07
CS-137	5.48E+09	7.48E+09	0.	2.55E+09	8.44E+08	1.44E+08	0.	4.91E+09
BA-140	2.60E+07	3.45E+04	0.	1.11E+04	1.87E+04	1.89E+08	0.	1.71E+06
CE-141	1.26E+05	8.50E+04	0.	3.94E+04	0.	3.24E+08	0.	9.63E+03
CE-144	2.78E+07	1.16E+07	0.	6.87E+06	0.	9.37E+09	0.	1.49E+06
PR-143	1.51E+04	6.06E+03	0.	3.49E+03	0.	6.60E+07	0.	7.49E+02
ND-147	6.19E+04	1.06E+04	0.	1.33E+04	0.	3.19E+07	0.	2.49E+03

BASED ON 1 μCi/SEC RELEASE RATE OF EACH ISOTOPE AND A VALUE OF 1 FOR χ/Q, χ_d/Q, AND D/Q.

3.0 RADIOACTIVE GASEOUS EFFLUENTS

ENVIRONMENTAL PATHWAY DOSE CONVERSION FACTORS FOR GASEOUS EFFLUENTS

PATHWAY - Stored Fruits and Vegetables
AGE GROUP - TEENAGER

NUCLIDE	ORGAN DOSE FACTORS (SQ.METER-MREM/YR PER UCI/SEC)							
	BONE	LIVER	THYROID	KIDNEY	LUNG	GI-LLI	SKIN	TOTAL BODY
H-3	0.	2.36E+03	2.36E+03	2.98E+03	2.36E+03	2.36E+03	0.	2.36E+03
C-14	2.49E+05	2.49E+05	2.49E+05	1.87E+05	2.49E+05	2.49E+05	0.	2.49E+05
P-32	4.45E+08	2.79E+07	0.	0.	0.	5.00E+07	0.	1.72E+07
CR-51	0.	0.	1.98E+04	7.31E+03	4.40E+04	8.33E+06	0.	3.31E+04
MN-54	0.	3.20E+08	0.	9.52E+07	0.	9.80E+08	0.	6.11E+07
FE-59	1.10E+08	2.61E+08	0.	0.	7.23E+07	8.60E+08	0.	9.91E+07
CO-57	0.	1.19E+07	0.	0.	0.	3.03E+08	0.	1.99E+07
CO-58	0.	3.85E+07	0.	0.	0.	5.21E+08	0.	8.78E+07
CO-60	0.	2.24E+08	0.	0.	0.	2.69E+09	0.	5.11E+08
NI-63	1.08E+10	7.52E+08	0.	0.	0.	1.57E+08	0.	3.64E+08
ZN-65	3.23E+08	1.03E+09	0.	6.86E+08	0.	6.46E+08	0.	4.64E+08
RB-86	0.	1.09E+08	0.	0.	0.	2.15E+07	0.	5.09E+07
SR-89	1.32E+10	0.	0.	0.	0.	1.44E+09	0.	3.80E+08
SR-90	8.64E+11	0.	0.	0.	3.12E+09	2.74E+10	0.	2.14E+11
Y-91	6.54E+06	0.	0.	0.	0.	2.51E+09	0.	1.75E+05
ZR-95	1.63E+06	6.21E+05	0.	6.92E+05	0.	1.67E+09	0.	4.10E+05
NB-95	1.32E+05	7.93E+04	0.	6.24E+04	0.	3.24E+08	0.	4.47E+04
RU-103	5.19E+06	0.	0.	1.55E+07	0.	4.05E+08	0.	2.32E+06
RU-106	2.87E+08	0.	0.	3.28E+08	0.	1.30E+10	0.	3.61E+07
AG-110M	1.08E+07	1.00E+07	0.	1.97E+07	0.	4.08E+09	0.	5.95E+06
CD-115M	0.	4.41E+07	0.	3.50E+07	0.	1.86E+09	0.	1.41E+06

BASED ON 1 μCi/SEC RELEASE RATE OF EACH ISOTOPE AND A VALUE OF 1 FOR χ/Q, χ_d/Q, AND D/Q.

3.0 RADIOACTIVE GASEOUS EFFLUENTS

ENVIRONMENTAL PATHWAY DOSE CONVERSION FACTORS FOR GASEOUS EFFLUENTS

PATHWAY - Stored Fruits and Vegetables
AGE GROUP - TEENAGER

NUCLIDE	ORGAN DOSE FACTORS (SQ. METER-MREM/YR PER UCI/SEC)							
	BONE	LIVER	THYROID	KIDNEY	LUNG	GI-LLI	SKIN	TOTAL BODY
SN-123	0.	0.	0.	0.	0.	0.	0.	0.
SN-126	7.16E+09	1.42E+08	4.17E+07	0.	5.73E+07	9.67E+09	0.	2.35E+08
SB-124	9.55E+07	1.80E+06	2.31E+05	0.	7.41E+07	2.70E+09	0.	3.77E+07
SB-125	2.15E+08	1.60E+07	1.13E+07	1.12E+08	1.84E+10	1.67E+09	0.	4.06E+07
TE-125M	1.26E+08	4.50E+07	3.55E+07	3.58E+08	0.	3.52E+08	0.	1.67E+07
TE-127M	3.43E+08	1.21E+08	9.09E+07	1.38E+09	0.	1.73E+09	0.	4.26E+07
TE-129M	2.90E+08	1.07E+08	9.27E+07	8.38E+08	0.	1.01E+09	0.	4.56E+07
I-130	0.	0.	0.	0.	0.	0.	0.	0.
I-131	4.85E+06	6.85E+06	1.98E+09	8.88E+06	0.	1.30E+06	0.	4.08E+06
I-132	0.	0.	0.	0.	0.	0.	0.	0.
I-133	0.	0.	0.	0.	0.	0.	0.	0.
I-134	0.	0.	0.	0.	0.	0.	0.	0.
I-135	6.23E-01	5.75E-01	0.	2.18E-01	6.55E-02	1.34E-02	0.	2.55E-01
CS-134	6.26E+09	1.51E+10	0.	3.73E+09	1.83E+09	1.74E+08	0.	7.04E+09
CS-136	1.07E+07	4.22E+07	0.	2.35E+07	3.22E+06	4.79E+06	O.	3.04E+07
CS-137	8.90E+09	1.20E+10	0.	3.08E+09	1.59E+09	1.60E+08	0.	4.20E+09
BA-140	4.38E+07	5.70E+04	0.	1.34E+04	3.61E+04	1.75E+08	0.	2.82E+06
CE-141	2.05E+05	1.37E+05	0.	4.78E+04	0.	3.72E+08	0.	1.58E+04
CE-144	4.97E+07	2.04E+07	0.	8.33E+06	0.	1.17E+10	0.	2.64E+06
PR-143	1.83E+04	7.35E+03	0.	4.23E+03	0.	8.00E+07	0.	9.07E+02
ND-147	7.51E+04	1.29E+04	0.	1.61E+04	0.	3.86E+07	0.	3.03E+03

BASED ON 1 μCi/SEC RELEASE RATE OF EACH ISOTOPE AND A VALUE OF 1 FOR χ/Q, χ_d/Q, AND D/Q.

3.0 RADIOACTIVE GASEOUS EFFLUENTS

ENVIRONMENTAL PATHWAY DOSE CONVERSION FACTORS FOR GASEOUS EFFLUENTS

PATHWAY - Stored Fruits and Vegetables
AGE GROUP - CHILD

NUCLIDE	ORGAN DOSE FACTORS (SQ. METER-MREM/YR PER UCI/SEC)							
	BONE	LIVER	THYROID	KIDNEY	LUNG	GI-LLI	SKIN	TOTAL BODY
H-3	0.	3.73E+03	3.73E+03	2.46E+03	3.73E+03	3.73E+03	0.	3.73E+03
C-14	6.14E+05	6.14E+05	6.14E+05	1.55E+05	6.14E+05	6.14E+05	0.	6.14E+05
P-32	3.67E+08	2.30E+07	0.	0.	0.	4.13E+07	0.	1.42E+07
CR-51	0.	0.	1.63E+04	6.03E+03	3.63E+04	6.87E+06	0.	2.73E+04
MN-54	0.	2.64E+08	0.	7.86E+07	0.	8.09E+08	0.	5.04E+07
FE-59	9.06E+07	2.15E+08	0.	0.	5.97E+07	7.10E+08	0.	8.18E+07
CO-57	0.	9.85E+06	0.	0.	0.	2.50E+08	0.	1.64E+07
CO-58	0.	5.93E+07	0.	0.	0.	3.53E+08	0.	1.79E+08
CO-60	0.	3.46E+08	0.	0.	0.	1.92E+09	0.	1.04E+09
NI-63	8.95E+09	6.21E+08	0.	0.	0.	1.29E+08	0.	3.00E+08
ZN-65	2.67E+08	8.46E+08	0.	5.66E+08	0.	5.33E+08	0.	3.83E+08
RB-86	0.	9.00E+07	0.	0.	0.	1.78E+07	0.	4.20E+07
SR-89	3.28E+10	0.	0.	0.	0.	1.22E+09	0.	9.38E+08
SR-90	1.18E+12	0.	0.	0.	0.	2.39E+10	0.	2.99E+11
Y-91	1.61E+07	0.	0.	0.	0.	2.14E+09	0.	4.30E+05
ZR-95	3.74E+06	9.93E+05	0.	5.72E+05	0.	1.21E+09	0.	8.55E+05
NB-95	2.93E+05	1.25E+05	0.	5.15E+04	0.	2.16E+08	0.	9.17E+04
RU-103	1.23E+07	0.	0.	1.28E+07	0.	3.22E+08	0.	4.95E+06
RU-106	7.05E+08	0.	0.	3.15E+08	0.	1.10E+10	0.	8.77E+07
AG-110M	8.92E+06	8.25E+06	0.	1.62E+07	0.	3.37E+09	0.	4.91E+06
CD-115M	0.	3.64E+07	0.	2.89E+07	0.	1.53E+09	0.	1.16E+06

BASED ON 1 μCi/SEC RELEASE RATE OF EACH ISOTOPE AND A VALUE OF 1 FOR χ/Q, χ_d/Q, AND D/Q.

3.0 RADIOACTIVE GASEOUS EFFLUENTS

ENVIRONMENTAL PATHWAY DOSE CONVERSION FACTORS FOR GASEOUS EFFLUENTS

PATHWAY - Stored Fruits and Vegetables
AGE GROUP - CHILD

NUCLIDE	ORGAN DOSE FACTORS (SQ. METER-MREM/YR PER UCI/SEC)							
	BONE	LIVER	THYROID	KIDNEY	LUNG	GI-LLI	SKIN	TOTAL BODY
SN-123	0.	0.	0.	0.	0.	0.	0.	0.
SN-126	5.91E+09	1.18E+08	3.44E+07	0.	4.73E+07	7.99E+09	0.	1.94E+08
SB-124	7.88E+07	1.49E+06	1.90E+05	0.	6.11E+07	2.23E+09	0.	3.11E+07
SB-125	2.42E+08	2.79E+07	2.73E+07	9.26E+07	1.52E+10	1.37E+09	O.	4.21E+07
TE-125M	3.09E+08	8.38E+07	8.68E+07	2.96E+08	0.	2.98E+08	0.	4.12E+07
TE-127M	2.96E+08	1.02E+08	8.34E+07	1.15E+09	O.	1.71E+09	0.	3.77E+07
TE-129M	7.12E+08	1.98E+08	2.27E+08	6.92E+08	0.	8.57E+08	0.	1.10E+08
I-130	0.	0.	0.	0.	0.	0.	0.	0.
I-131	1.17E+07	1.20E+07	3.90E+09	7.33E+06	0.	1.03E+06	0.	9.05E+06
I-132	0.	0.	0.	0.	0.	0.	0.	0.
I-133	0.	0.	0.	0.	0.	0.	0.	0.
I-134	0.	0.	0.	0.	0.	0.	0.	0.
I-135	5.14E-01	4.74E-01	0.	1.80E-01	5.40E-02	1.11E-02	0.	2.11E-01
CS-134	1.44E+10	2.42E+10	0.	3.08E+09	2.69E+09	1.31E+08	0.	5.15E+09
CS-136	8.82E+06	3.48E+07	0.	1.94E+07	2.66E+06	3.96E+06	0.	2.51E+07
CS-137	2.14E+10	2.07E+10	0.	2.55E+09	2.43E+09	1.26E+08	0.	3.09E+09
BA-140	1.06E+08	9.79E+04	0.	1.11E+04	5.52E+04	1.52E+08	0.	6.20E+06
CE-141	5.04E+05	2.52E+05	0.	3.94E+04	0.	3.16E+08	0.	3.75E+04
CE-144	1.22E+08	3.81E+07	0.	6.87E+06	0.	9.89E+09	0.	6.48E+06
PR-143	1.51E+04	6.06E+03	0.	3.49E+03	0.	6.60E+07	0.	7.49E+02
ND-147	6.19E+04	1.06E+04	0.	1.33E+04	0.	3.19E+07	0.	2.49E+03

BASED ON 1 μCi/SEC RELEASE RATE OF EACH ISOTOPE AND A VALUE OF 1 FOR χ/Q, χ_d/Q, AND D/Q.

3.0 RADIOACTIVE GASEOUS EFFLUENTS

ENVIRONMENTAL PATHWAY DOSE CONVERSION FACTORS FOR GASEOUS EFFLUENTS

PATHWAY - FRESH FRUITS AND VEGETABLES								AGE GROUP - ADULT
NUCLIDE	ORGAN DOSE FACTORS (SQ.METER-MREM/YR PER UCI/SEC)							
	BONE	LIVER	THYROID	KIDNEY	LUNG	GI-LLI	SKIN	TOTAL BODY
H-3	0.	4.02E+02	4.02E+02	4.02E+02	4.02E+02	4.02E+02	0.	4.02E+02
C-14	1.25E+05	2.50E+04	2.50E+04	2.50E+04	2.50E+04	2.50E+04	0.	2.50E+04
P-32	1.04E+09	6.51E+07	0.	0.	0.	1.17E+08	0.	4.02E+07
CR-51	0.	0.	1.15E+04	4.25E+03	2.56E+04	4.85E+06	0.	1.93E+04
MN-54	0.	4.87E+07	0.	1.45E+07	0.	1.49E+08	0.	9.31E+06
FE-59	3.64E+07	8.64E+07	0.	0.	2.40E+07	2.85E+08	0.	3.29E+07
CO-57	0.	1.85E+06	0.	0.	0.	4.70E+07	0.	3.08E+06
CO-58	0.	6.89E+06	0.	0.	0.	1.40E+08	0.	1.54E+07
CO-60	0.	2.38E+07	0.	0.	0.	4.46E+08	0.	5.23E+07
NI-63	1.45E+09	1.01E+08	0.	0.	0.	2.10E+07	0.	4.87E+07
ZN-65	5.11E+07	1.62E+08	0.	1.09E+08	0.	1.02E+08	0.	7.34E+07
RB-86	0.	1.30E+08	0.	0.	0.	2.56E+07	0.	6.06E+07
SR-89	2.67E+09	0.	0.	0.	0.	4.26E+08	0.	7.64E+07
SR-90	8.49E+10	0.	0.	0.	0.	2.14E+09	0.	2.07E+10
Y-91	1.26E+06	0.	0.	0.	0.	6.92E+08	0.	3.37E+04
ZR-95	2.93E+05	9.82E+04	0.	1.49E+05	0.	3.34E+08	0.	6.38E+04
NB-95	4.87E+04	2.71E+04	0.	2.68E+04	0.	1.64E+08	0.	1.06E+04
RU-103	1.50E+06	0.	0.	5.75E+06	0.	1.76E+08	0.	6.49E+05
RU-106	2.95E+07	0.	0.	5.71E+07	0.	1.91E+09	0.	3.74E+06
AG-110M	1.69E+06	1.56E+06	0.	3.08E+06	0.	6.38E+08	0.	9.30E+05
CD-115M	0.	1.53E+07	0.	1.21E+07	0.	6.42E+08	0.	4.88E+05

BASED ON 1 μCi/SEC RELEASE RATE OF EACH ISOTOPE AND A VALUE OF 1 FOR χ/Q, χ_d/Q, AND D/Q.

3.0 RADIOACTIVE GASEOUS EFFLUENTS

ENVIRONMENTAL PATHWAY DOSE CONVERSION FACTORS FOR GASEOUS EFFLUENTS

PATHWAY - FRESH FRUITS AND VEGETABLES AGE GROUP - ADULT								
NUCLIDE	ORGAN DOSE FACTORS (SQ. METER-MREM/YR PER UCI/SEC)							
	BONE	LIVER	THYROID	KIDNEY	LUNG	GI-LLI	SKIN	TOTAL BODY
SN-123	1.00E-05	1.66E-07	1.41E-07	0.	0.	2.04E-05	0.	2.45E-07
SN-126	4.52E+08	1.89E+07	5.54E+06	0.	4.31E+06	8.46E+08	0.	2.94E+07
SB-124	2.52E+07	4.75E+05	6.08E+04	0.	1.95E+07	7.12E+08	0.	9.94E+06
SB-125	2.58E+07	7.23E+05	4.03E+05	5.14E+06	2.56E+09	2.22E+08	0.	5.10E+06
TE-125M	2.38E+07	8.65E+06	7.17E+06	9.69E+07	0.	9.51E+07	0.	3.19E+06
TE-127M	6.75E+07	2.36E+07	1.77E+07	2.73E+08	0.	3.06E+08	0.	8.32E+06
TE-129M	8.93E+07	3.34E+07	3.08E+07	3.73E+08	0.	4.49E+08	0.	1.42E+07
I-130	3.93E+05	1.16E+06	1.48E+08	1.81E+06	0.	9.98E+05	0.	4.58E+05
I-131	7.78E+07	1.12E+08	3.65E+10	1.91E+08	0.	2.94E+07	0.	6.38E+07
I-132	5.57E+01	1.49E+02	1.96E+04	2.38E+02	0.	2.80E+01	0.	5.29E+01
I-133	2.13E+06	3.69E+06	7.10E+08	6.44E+06	0.	3.24E+06	0.	1.13E+06
I-134	1.03E-04	2.79E-04	3.63E-02	4.45E-04	0.	2.43E-07	0.	9.99E-05
I-135	4.04E+04	1.07E+05	1.40E+07	1.70E+05	8.65E-03	1.19E+05	0.	3.91E+04
CS-134	6.82E+08	1.62E+09	0.	5.26E+08	1.74E+08	2.84E+07	0.	1.33E+09
CS-136	3.32E+07	1.31E+08	0.	7.29E+07	9.99E+06	1.49E+07	0.	9.43E+07
CS-137	8.90E+08	1.22E+09	0.	4.14E+08	1.37E+08	2.34E+07	0.	7.98E+08
BA-140	1.03E+08	1.35E+05	0.	4.39E+04	7.38E+04	6.65E+08	0.	6.77E+06
CE-141	7.16E+04	4.85E+04	0.	2.25E+04	0.	1.85E+08	0.	5.49E+03
CE-144	5.19E+06	2.17E+06	0.	1.29E+06	0.	1.75E+09	0.	2.78E+05
PR-143	4.84E+04	1.94E+04	0.	1.12E+04	0.	2.12E+08	0.	2.40E+03
ND-147	3.49E+04	3.43E+04	0.	2.07E+04	0.	1.63E+08	0.	2.24E+03

BASED ON 1 μCi/SEC RELEASE RATE OF EACH ISOTOPE AND A VALUE OF 1 FOR χ/Q, χ_d/Q, AND D/Q.

3.0 RADIOACTIVE GASEOUS EFFLUENTS

ENVIRONMENTAL PATHWAY DOSE CONVERSION FACTORS FOR GASEOUS EFFLUENTS

PATHWAY - FRESH FRUITS AND VEGETABLES								AGE GROUP - TEENAGER
NUCLIDE	ORGAN DOSE FACTORS (SQ. METER-MREM/YR PER UCI/SEC)							
	BONE	LIVER	THYROID	KIDNEY	LUNG	GI-LLI	SKIN	TOTAL BODY
H-3	0.	2.09E+02	2.09E+02	2.64E+02	2.09E+02	2.09E+02	0.	2.09E+02
C-14	2.18E+04	2.18E+04	2.18E+04	1.64E+04	2.18E+04	2.18E+04	0.	2.18E+04
P-32	6.81E+08	4.27E+07	0.	0.	0.	7.66E+07	0.	2.64E+07
CR-51	0.	0.	7.56E+03	2.79E+03	1.68E+04	3.18E+06	0.	1.27E+04
MN-54	0.	3.20E+07	0.	9.52E+06	0.	9.80E+07	0.	6.11E+06
FE-59	2.39E+07	5.67E+07	0.	0.	1.57E+07	1.87E+07	0.	2.16E+07
CO-57	0.	1.22E+06	0.	0.	0.	3.09E+07	0.	2.02E+06
CO-58	0.	6.01E+06	0.	0.	0.	8.12E+07	0.	1.37E+07
CO-60	0.	2.01E+07	0.	0.	0.	2.41E+08	0.	4.58E+07
NI-63	9.52E+08	6.61E+07	0.	0.	0.	1.38E+07	0.	3.19E+07
ZN-65	3.35E+07	1.06E+08	0.	7.12E+07	0.	6.70E+07	0.	4.82E+07
RB-86	0.	8.52E+07	0.	0.	0.	1.68E+07	0.	3.97E+07
SR-89	2.61E+09	0.	0.	0.	0.	2.83E+08	0.	7.48E+07
SR-90	7.61E+10	0.	0.	0.	2.41E+08	2.31E+09	0.	1.88E+10
Y-91	1.15E+06	0.	0.	0.	0.	4.41E+08	0.	3.06E+04
ZR-95	2.35E+05	8.19E+04	0.	9.81E+04	0.	1.92E+08	0.	5.61E+04
NB-95	3.72E+04	2.24E+04	0.	1.76E+04	0.	9.14E+07	0.	1.26E+04
RU-103	1.27E+06	0.	0.	3.77E+06	0.	9.87E+07	0.	5.66E+05
RU-106	2.82E+07	0.	0.	3.75E+07	0.	1.28E+09	0.	3.54E+06
AG-110M	1.11E+06	1.03E+06	0.	2.02E+06	0.	4.19E+08	0.	6.10E+05
CD-115M	0.	1.00E+07	0.	7.94E+06	0.	4.21E+08	0.	3.20E+05

BASED ON 1 μCi/SEC RELEASE RATE OF EACH ISOTOPE AND A VALUE OF 1 FOR χ/Q, χ_d/Q, AND D/Q.

3.0 RADIOACTIVE GASEOUS EFFLUENTS

ENVIRONMENTAL PATHWAY DOSE CONVERSION FACTORS FOR GASEOUS EFFLUENTS

PATHWAY - FRESH FRUITS AND VEGETABLES AGE GROUP - TEENAGER								
NUCLIDE	ORGAN DOSE FACTORS (SQ. METER-MREH/YR PER UCI/SEC)							
	BONE	LIVER	THYROID	KIDNEY	LUNG	GI-LLI	SKIN	TOTAL BODY
SN-123	9.25E-06	1.53E-07	1.22E-07	0.	0.	1.33E-05	0.	2.28E-07
SN-126	6.25E+08	1.24E+07	3.64E+06	0.	2.83E+06	5.55E+08	0.	1.94E+07
SB-124	1.65E+07	3.12E+05	3.99E+04	0.	1.28E+07	4.67E+08	0.	6.53E+06
SB-125	1.73E+07	5.97E+05	3.48E+05	3.38E+06	1.68E+09	1.45E+08	0.	3.40E+06
TE-125M	2.23E+07	7.99E+06	6.30E+06	6.36E+07	0.	6.24E+07	0.	2.96E+06
TE-127M	4.46E+07	1.55E+07	1.18E+07	1.80E+08	0.	2.23E+08	0.	5.51E+06
TE-129M	8.46E+07	3.14E+07	2.71E+07	2.45E+07	0.	2.95E+08	0.	1.33E+07
I-130	2.58E+05	7.64E+05	9.72E+07	1.19E+06	0.	6.55E+05	0.	3.00E+05
I-131	6.84E+07	9.66E+07	2.79E+10	1.25E+08	0.	1.83E+07	0.	5.76E+07
I-132	3.65E+01	9.77E+01	1.29E+04	1.56E+02	0.	1.84E+01	0.	3.47E+01
I-133	1.98E+06	3.36E+06	6.10E+08	4.23E+06	0.	2.44E+06	0.	1.04E+06
I-134	6.75E-05	1.83E-04	2.38E-02	2.92E-04	0.	1.60E-07	0.	6.56E-05
I-135	2.65E+04	7.00E+04	9.15E+06	1.11E+05	5.67E-03	7.84E+04	0.	2.57E+04
CS-134	5.79E+08	1.40E+09	0.	3.45E+08	1.69E+08	1.61E+07	0.	6.52E+08
CS-136	2.18E+07	8.60E+07	0.	4.78E+07	6.56E+06	9.77E+06	0.	6.19E+07
CS-137	7.83E+08	1.05E+09	0.	2.72E+08	1.40E+08	1.41E+07	0.	3.70E+08
BA-140	9.38E+07	1.21E+05	0.	2.88E+04	7.73E+04	3.19E+08	0.	6.04E+06
CS-141	6.32E+04	4.24E+04	0.	1.47E+04	0.	1.15E+08	0.	4.86E+03
CS-144	5.03E+06	2.06E+06	0.	8.43E+05	0.	1.19E+09	0.	2.67E+05
PR-143	3.17E+04	1.28E+04	0.	7.34E+03	0.	1.39E+08	0.	1.58E+03
ND-147	2.29E+04	2.26E+04	0.	1.36E+04	0.	1.06E+08	0.	1.47E+03

BASED ON 1 μCi/SEC RELEASE RATE OF EACH ISOTOPE AND A VALUE OF 1 FOR χ/Q, χ_d/Q, AND D/Q.

3.0 RADIOACTIVE GASEOUS EFFLUENTS

ENVIRONMENTAL PATHWAY DOSE CONVERSION FACTORS FOR GASEOUS EFFLUENTS

PATHWAY - FRESH FRUITS AND VEGETABLES								AGE GROUP - CHILD
NUCLIDE	ORGAN DOSE FACTORS (SQ.METER-MREM/YR PER UCI/SEC)							
	BONE	LIVER	THYROID	KIDNEY	LUNG	GI-LLI	SKIN	TOTAL BODY
H-3	0.	2.47E+02	2.47E+02	1.63E+02	2.47E+02	2.47E+02	0.	2.47E+02
C-14	4.04E+04	4.04E+04	4.04E+04	1.02E+04	4.04E+04	4.04E+04	0.	4.04E+04
P-32	4.22E+08	2.64E+07	0.	0.	0.	4.74E+07	0.	1.63E+07
CR-51	0.	0.	4.68E+03	1.73E+03	1.04E+04	1.97E+06	0.	7.83E+03
MN-54	0.	1.98E+07	0.	5.89E+06	0.	6.07E+07	0.	3.78E+06
FE-59	1.48E+07	3.51E+07	0.	0.	9.75E+06	1.16E+08	0.	1.34E+07
CO-57	0.	7.53E+05	0.	0.	0.	1.91E+07	0.	1.25E+06
CO-58	0.	6.94E+06	0.	0.	0.	4.13E+07	0.	2.09E+07
CO-60	0.	2.33E+07	0.	0.	0.	1.29E+08	0.	6.98E+07
NI-63	5.90E+08	4.09E+07	0.	0.	0.	8.53E+06	0.	1.98E+07
ZN-65	2.08E+07	6.59E+07	0.	4.41E+07	0.	4.15E+07	0.	2.98E+07
RB-86	0.	5.28E+07	0.	0.	0.	1.04E+07	0.	2.46E+07
SR-89	4.84E+09	0.	0.	0.	0.	1.81E+08	0.	1.39E+08
SR-90	7.79E+10	0.	0.	0.	0.	1.52E+09	0.	1.98E+10
Y-91	2.12E+06	0.	0.	0.	0.	2.82E+08	0.	5.65E+04
ZR-95	4.06E+05	9.87E+04	0.	6.07E+04	0.	1.08E+08	0.	8.81E+04
NB-95	6.20E+04	2.64E+04	0.	1.09E+04	0.	4.58E+07	0.	1.94E+04
RU-103	2.24E-06	0.	0.	2.34E+06	0.	5.88E+07	0.	9.05E+05
RU-106	5.19E+07	0.	0.	2.32E+07	0.	8.07E+08	0.	6.46E+06
AG-110M	6.87E+05	6.36E+05	0.	1.25E+06	0.	2.59E+08	0.	3.78E+05
CD-115M	0.	6.20E+06	0.	4.92E+06	0.	2.61E+08	0.	1.98E+05

BASED ON 1 μCi/SEC RELEASE RATE OF EACH ISOTOPE AND A VALUE OF 1 FOR χ/Q, χ_d/Q, AND D/Q.

3.0 RADIOACTIVE GASEOUS EFFLUENTS

ENVIRONMENTAL PATHWAY DOSE CONVERSION FACTORS FOR GASEOUS EFFLUENTS

PATHWAY - FRESH FRUITS AND VEGETABLES AGE GROUP - CHILD								
NUCLIDE	ORGAN DOSE FACTORS (SQ.METER-MREM/YR PER UCI/SEC)							
	BONE	LIVER	THYROID	KIDNEY	LUNG	GI-LLI	SKIN	TOTAL BODY
SN-123	1.17E-05	2.14E-07	2.26E-07	0.	0.	8.50E-06	0.	4.21E-07
SN-126	3.87E+08	7.68E+06	2.25E+06	0.	1.75E+06	3.44E+08	0.	1.19E+07
SB-124	1.02E+07	1.93E+05	2.47E+04	0.	7.93E+06	2.89E+08	0.	4.40E+06
SB-125	1.22E+07	6.99E+05	6.22E+05	2.09E+06	1.04E+09	9.02E+07	0.	2.29E+06
TE-125M	4.12E+07	1.12E+07	1.16E+07	3.94E+07	0.	3.97E+07	0.	5.49E+06
TE-127M	2.88E+07	9.90E+06	8.09E+06	1.11E+08	0.	1.65E+08	0.	3.67E+06
TE-129M	1.56E+08	4.35E+07	4.99E+07	1.51E+08	0.	1.88E+08	0.	2.41E+07
I-130	1.60E+05	4.73E+05	6.02E+07	7.35E+05	0.	4.05E+05	0.	1.86E+05
I-131	1.24E+08	1.27E+08	4.13E+10	7.75E+07	0.	1.09E+07	0.	9.58E+07
I-132	2.26E+01	6.05E+01	7.97E+03	9.65E+01	0.	1.14E+01	0.	2.15E+01
I-133	3.61E+06	4.46E+06	1.08E+09	2.62E+06	0.	1.81E+06	0.	1.75E+06
I-134	4.18E-05	1.14E-04	1.47E-02	1.81E-04	0.	9.89E-08	0.	4.06E-05
I-135	1.64E+04	4.33E+04	5.67E+06	6.89E+04	3.51E-03	4.85E+04	0.	1.59E+04
CS-134	9.97E+08	1.68E+09	0.	2.14E+08	1.87E+08	9.08E+06	0.	3.57E+08
CS-136	1.35E+07	5.32E+07	0.	2.96E+07	4.06E+06	6.05E+06	0.	3.83E+07
CS-137	1.41E+09	1.37E+09	0.	1.68E+08	1.60E+08	8.34E+06	0.	2.04E+08
BA-140	1.70E+08	1.56E+05	0.	1.78E+04	8.87E+04	2.08E+08	0.	9.96E+06
CE-141	1.17E+05	5.84E+04	0.	9.13E+03	0.	7.33E+07	0.	8.69E+03
CE-144	9.23E+06	2.89E+06	0.	5.22E+05	0.	7.51E+08	0.	4.92E+05
PR-143	1.97E+04	7.89E+03	0.	4.54E+03	0.	8.60E+07	0.	9.75E+02
ND-147	1.42E+04	1.39E+04	0.	8.42E+03	0.	6.61E+07	0.	9.08E+02

BASED ON 1 μCi/SEC RELEASE RATE OF EACH ISOTOPE AND A VALUE OF 1 FOR χ/Q, χ_d/Q, AND D/Q.

APPENDIX 3C

TECHNICAL BASIS FOR A_{eff} AND TG_{131}

3.0 RADIOACTIVE GASEOUS EFFLUENTS

APPENDIX 3C
Technical Bases for A_{eff} and TG_{131}

Overview

The evaluation of doses due to releases of radioactive material to the atmosphere can be simplified by the use of effective dose transfer factors instead of using dose factors which are radionuclide specific. These effective factors, which are based on the typical radionuclide distribution in the releases, can be applied to the total radioactivity released to approximate the dose in the environment, i.e., instead of having to sum the isotopic distribution multiplied by the isotope specific dose factor only a single multiplication (A_{eff} times the total quantity of radioactive material released) would be needed. This approach provides a reasonable estimate of the actual dose while eliminating the need for a detailed calculational technique.

Determination of A_{eff}

The effective dose transfer factor is based on past operating data. The radioactive effluent distribution for the past years can be used to derive a single effective factor by the following equation :

$$A_{eff} = \sum_i A_i \bullet f_i \qquad \text{(Eq. 3C-1)}$$

where:

A_{eff}	=	the effective dose transfer factor
A_i	=	the dose transfer factor for radionuclide i
f_i	=	the fractional abundance of radionuclide i in the radioactive effluents

This equation yields a single dose factor, weighted by the typical radionuclide distribution.

To determine the appropriate effective factor to be used and to evaluate the degree of variability, the atmospheric radioactive effluents for 3 years have been evaluated. An effective dose transfer factor has been determined for the gaseous effluents for all pathways of interest. Tables 3C-1 and 3C-2 present the results of this evaluation.

For the radioiodines and particulates with half-lives greater than 8 days, the effective dose transfer factor is based solely on the radioiodines (I-131, and I-133). This approach was selected because the radioiodines contribution essentially all of the dose to the infant's thyroid via the cow-milk pathway. The infant's thyroid and the cow-milk pathway are the critical organ and controlling pathway, respectively, for the releases of radioiodine and particulates.

Determination of A_{eff} , (continued)

All other particulates contribute less than 1% of the dose. The effective dose transfer factor is determined by applying equation 3C-1 to the radioiodines. However, in

determining the dose, this effective dose transfer factor should be applied to the total release of all radioiodines and to particulates with half lives greater than 8 days.

This uniform application is conservative in providing reasonable assurance that the actual dose will not be underestimated by the use of this simplified method.

The determination of A_{eff} is limited to three years (1978, 1979, and 1980) because of the changes that occurred in the waste processing system. A demineralizer system replaced the previously used evaporator in the liquid waste processing system. A_{eff} was re-evaluated using gas radwaste data from 1992, 1993, and 1994. The re-evaluation indicated that no significant changes have occurred in the radioactive distribution of the release mixture from the Gaseous Radwaste System.

As can be seen from Tables 3C-1 and 3C-2, the effective dose transfer factor varies little from year to year. The maximum observed variability from the average value is 13% for the noble gases and 25% for the radioiodines. This variability is minor considering other areas of uncertainty and conservatism inherent in the environmental dose calculational models.

To provide an additional degree of conservatism, a factor of 0.8 is introduced into the dose calculational process when the effective dose transfer factor is used. This added conservatism provides additional assurance that the evaluation of doses by the use of a single effective factor will not significantly underestimate any actual doses in the environment.

Table 3C-1
Effective Dose Transfer Factors : Noble Gases-Air Dose

Year	$A_{\gamma eff}$ $\frac{mrad}{(\mu Ci \cdot sec/m^3)}$	$A_{\beta eff}$ $\frac{mrad}{(\mu Ci \cdot sec/m^3)}$
1978	1.3×10^{-5}	3.4×10^{-5}
1979	1.3×10^{-5}	3.4×10^{-5}
1980	1.6×10^{-5}	3.4×10^{-5}
Average	1.4×10^{-5}	3.4×10^{-5}

Table 3C-2
Effective Dose Transfer Factor for Air-Grass-Cow-Milk-Infant-Thyroid Pathway, TG_{131}

Radio nuclide	Annual Airborne Release (Ci)	Fraction	Dose Factor[a] $\frac{mrem/yr}{(\mu Ci/(m^2 \cdot sec))}$	Weighted Dose Factor - TG_{131} $\frac{mrem/yr}{(\mu Ci/(m^2 \cdot sec))}$
1978				
I-131	0.381	0.688	9.9E11	6.9E11
I-133	0.129	0.233	1.3E10	
I-135	0.044	0.079	5.2E6	
1979				
I-131	0.0188	0.520	9.9E11	5.2E11
I-133	0.0156	0.432	1.3E10	
I-135	0.0018	0.048	5.2E6	
1980				
I-131	0.0518	0.756	9.9E11	7.5E11
I-133	0.0124	0.181	1.3E10	
I-135	0.0043	0.063	5.2E6	
Average[b]				6.5E11

a-Air-grass-cow-milk-infant-thyroid dose transfer factor.

b-Effective dose commitment transfer factor is the average of weighted dose transfer factor over three years.

SECTION 4

TOTAL DOSE FROM RADIOACTIVE EFFLUENTS, LIQUID AND GASEOUS

CONTROL 4.1: LIMITS OF TOTAL DOSE TO MEMBERS OF THE PUBLIC

The annual (calendar year) dose or dose commitment to any MEMBER OF THE PUBLIC due to releases of radioactivity and to radiation from uranium fuel cycle sources shall be limited to less than or equal to 25 mrems to the whole body or any organ, except the thyroid, which shall be limited to less than or equal to 75 mrems.

APPLICABILITY : At all times.

ACTION :

a. With the calculated doses from the release of radioactive materials in liquid or gaseous effluents exceeding twice the limits of Controls 2.3a., 2.3b., 3.3a., 3.3b., 3.4a., or 3.4b., calculations shall be made including direct radiation contributions from the units to determine whether the above limits of Control 4.1 have been exceeded. If such is the case, prepare and submit to the Commission within 30 days, pursuant to Control 1.6.6, a Special Report that defines the corrective action to be taken to reduce subsequent releases to prevent recurrence of exceeding the above limits and includes the schedule for achieving conformance with the above limits. This Special Report, as defined in 10 CFR 20.2203(a)(4), shall include an analysis that estimates the radiation exposure (dose) to a MEMBER OF THE PUBLIC from uranium fuel cycle sources, including all effluent pathways and direct radiation, for the calendar year that includes the release(s) covered by this report. It shall also describe levels of radiation and concentrations of radioactive material involved, and the cause of the exposure levels or concentrations. If the estimated dose(s) exceeds the above limits, and if the release condition resulting in violation of 40 CFR Part 190 has not already been corrected, the Special Report shall include a request for a variance in accordance with the provisions of 40 CFR Part 190. Submittal of the report is considered a timely request, and a variance is granted until staff action on the request is complete.

b. The provisions of Administrative Control section 1.6.3 are not applicable.

CONTROL 4.1: LIMITS OF TOTAL DOSE TO MEMBERS OF THE PUBLIC (continued)

SURVEILLANCE REQUIREMENTS

4.1.1. Cumulative dose contributions from liquid and gaseous effluents shall be determined in accordance with Surveillances 2.3, 3.3, and 3.4, and in accordance with the methodology and parameters in this ODCM.

4.1.2. Cumulative dose contributions from direct radiation from the units and the methodology used shall be indicated in the Annual Radioactive Effluent Release Report. This requirement is applicable only under conditions set forth in ACTION a. of Control 4.1

METHOD 4.1: LIMITS OF TOTAL DOSE TO MEMBERS OF THE PUBLIC

DISCUSSION :

Control 4.1 implements 40 CFR Part 190.10a. It requires the annual (calendar year) dose or dose commitment to any member of the public from all uranium fuel cycle operations to be limited to less than or equal to 75 mrem to the thyroid and 25 mrem to the total body or any other organ.

Fuel cycle sources or nuclear power reactors other than the Turkey Point Plant itself do not measurably or significantly increase the radioactivity concentration in the vicinity of the Plant; therefore, only radiation and radioactivity in the environment attributable to the Plant itself are considered in the assessment of compliance with 40 CFR Part 190.102.

In the event a dose calculated for the purpose of assessing compliance with Control 2.3, 3.3, or 3.4 exceeds 2 times the limit stated therein, then a calculation shall be made to determine whether any limit in Control 4.1 has been exceeded. The total dose calculated pursuant to Control 4.1 must include direct radiation contributions and the methodology for calculating direct radiation contribution must be indicated in the Annual Radioactive Effluent Release Report. These calculations should be made on the basis of radioactive effluents during the year-to-date and reference meteorological data or averaged meteorological data during completed quarters of the year-to-date.

Separately, an evaluation of doses due to effluents during the year is performed annually and reported in the Annual Radioactive Effluent Release Report submitted each year. This evaluation uses reference meteorological data or annual averaged meteorological data concurrent with the annual gaseous releases to evaluate atmospheric dispersion, deposition, and plume gamma exposure.

CONTROL 4.1: LIMITS OF TOTAL DOSE TO MEMBERS OF THE PUBLIC (continued)

METHOD 4.1: LIMITS OF TOTAL DOSE TO MEMBERS OF THE PUBLIC, (continued)

DISCUSSION , (continued)

To assess compliance with Control 4.1, evaluations of dose due to liquid and gaseous effluents are calculated as described by the equations for:

- total body dose due to liquid effluent via irradiation by radionuclides deposited on cooling canal shoreline (equation 2.3-1)
- total body dose due to noble gas gamma radiation (equation 4.1-1)
- skin dose due to noble gas beta radiation (equation 4.1-2)
- total body and maximally exposed organ doses due to gaseous effluents of radioactive I-131, I-133, tritium, and radioactive material in particulate form having a half-life greater than 8 days (equation 3.4-2).

The doses are calculated on the basis of liquid and gaseous effluents from the Plant, sampled and analyzed in accordance with ODCM Tables 2.2-1 and 3.2-1.

The receptor of the dose is described such that the dose to any member of the public is not likely to be underestimated. The receptor is selected on the basis of the combination of applicable pathways of exposure to gaseous effluent identified in the annual land use census and maximum ground level χ/Q at the residence. Conditions more conservative than appropriate for the maximally exposed person may be assumed in the dose assessment. Environmental pathway-to-dose transfer factors used in the dose calculations appear in Appendix 3B.

When assessing compliance with 40 CFR Part 190 or 10 CFR Part 50 Appendix I dose limits, Radiological Environmental Monitoring Program results may be used to indicate actual radioactivity levels in the environment attributable to the Turkey Point Plant as an alternate to calculating the concentrations from radioactive effluent measurements. The measured environmental activity levels may thus be used to supplement the evaluation of doses to real persons for assessing compliance with 40 CFR Part 190 or 10 CFR Part 50 Appendix I.

CONTROL 4.1: LIMITS OF TOTAL DOSE TO MEMBERS OF THE PUBLIC (continued)

METHOD 4.1: LIMITS OF TOTAL DOSE TO MEMBERS OF THE PUBLIC, (continued)

DOSE TO A PERSON FROM NOBLE GASES

Control 4.1 requires the calculation of the annual (calendar year) dose or dose commitment to a member of the public exposed to radioactive liquid and gaseous effluents from the plant. One component of personal dose is total body irradiation by gamma rays from noble gases. Another is irradiation of skin by beta and gamma radiation from noble gases. The methods for calculating these doses are presented below.

The amount of radioactive noble gas discharged is determined in the manner described in Method 3.2.

GAMMA DOSE TO TOTAL BODY

The gamma radiation dose to the whole body of a member of the public as a consequence of noble gas released from the Plant is calculated with the equation:

$$D_\gamma = \frac{\chi}{Q} \sum_i Q_i \bullet P_{\gamma i} \qquad \text{Eqn 4.1-1}$$

where:

D_γ = noble gas gamma dose to total body, (mrem)

Q_i = quantity of radioactive noble gas i discharged in gaseous effluent, (μCi)

χ/Q = atmospheric dispersion factor at the off-site location of interest, (sec/m^3)

$P_{\gamma i}$ = factor converting time integrated, ground level concentration of noble gas nuclide, I, to total body dose from gamma radiation listed in Table 4.1-1, $\frac{\text{mrem}}{(\mu\text{Ci}\cdot\text{sec/m}^3)}$

CONTROL 4.1:LIMITS OF TOTAL DOSE TO MEMBERS OF THE PUBLIC, (continued)

METHOD 4.1: LIMITS OF TOTAL DOSE TO MEMBERS OF THE PUBLIC, (continued)

DOSE TO A PERSON FROM NOBLE GASES, (continued)

When the total body dose due to gamma radiation from noble gas required by Control 4.1 is calculated, the most exposed receptor is located 1.75 miles west northwest of the plant where the reference meteorological dispersion factor, χ/Q, is 2.75×10^{-7} sec/m^3.

This calculation is the same technique used in Control 3.2, Equation 3.2-1, but is extrapolated to an annual release and the χ/Q value is for the most exposed receptor, not the minimum dispersion point off-site.

DOSE TO SKIN

The radiation dose to the skin of a member of the public due to noble gas released from the Plant may be calculated with the equation :

$$D = \frac{\chi}{Q}\left[\sum_i Q_i \bullet S_{\beta i} + 1.11 \sum Q_i \bullet A_{\gamma i}\right] \qquad \text{Eqn 4.1-2}$$

where:

D = dose to skin due to noble gases, (mrem)

χ/Q = atmospheric dispersion factor at the off-site location of interest, (sec/m^3).

Q_i = quantity of radioactive noble gas i discharged in gaseous effluent, (μCi).

$S_{\beta i}$ = factor converting time integrated ground level concentration of noble gas to skin dose from beta radiation listed in Table 4.1-1, $\frac{\text{mrem}}{(\mu\text{Ci}\cdot\text{sec/m}^3)}$

1.11 = ratio of tissue dose equivalent to air dose in a radiation field, (mrem/mrad)

$A_{\gamma i}$ = factor for converting time integrated, ground-level concentration of noble gas radionuclide i to air dose from its gamma radiation listed in Table 4.1-2, $\frac{\text{mrad}}{(\mu\text{Ci}\cdot\text{sec/m}^3)}$.

CONTROL 4.1:LIMITS OF TOTAL DOSE TO MEMBERS OF THE PUBLIC, (continued)

METHOD 4.1: LIMITS OF TOTAL DOSE TO MEMBERS OF THE PUBLIC, (continued)

DOSE TO A PERSON FROM NOBLE GASES, (continued)

When the skin beta dose due to noble gas required by Control 4.1 is calculated, the most exposed receptor is located 1.75 miles west northwest of the Plant where the reference meteorological dispersion factor, χ/Q, is 2.75×10^{-7} sec/m^3.

The total dose to the skin from noble gases is approximately equal to the beta radiation dose to the skin plus the gamma radiation dose to the total body.

This is the same technique used in Control 3.2, Equation 3.2-3, but is extrapolated to an annual release, and the χ/Q value is for the most exposed receptor rather than the minimum dispersion point off-site.

DOSE TO A PERSON DUE TO DIRECT RADIATION

When the dose due to direct radiation required by Control 4.1 is required to be calculated, the most appropriate TLD reading from the Radioactive Environmental Monitoring Program shall be used. This TLD reading shall be summed with the dose to a person from noble gas to obtain the total dose to Members of the Public. Specific methodology and which TLD measurement(s) used shall be described in the Annual Radioactive Effluent Release Report.

CONTROL 4.1:LIMITS OF TOTAL DOSE TO MEMBERS OF THE PUBLIC (continued)

METHOD 4.1: LIMITS OF TOTAL DOSE TO MEMBERS OF THE PUBLIC, (continued)

.**BASIS 4.1** : LIMITS OF TOTAL DOSE TO MEMBERS OF THE PUBLIC

This control is provided to meet the dose limitations of 40 CFR Part 190 that have been incorporated into 10 CFR 20.1301(d). The control requires the preparation and submittal of a Special Report whenever the calculated doses due to releases of radioactivity and to radiation from uranium fuel cycle sources exceed 25 mrems to the whole body or any organ, except the thyroid, which shall be limited to less than or equal to 75 mrems. For sites containing up to four reactors, it is highly unlikely that the resultant dose to a MEMBER OF THE PUBLIC will exceed the dose limits of 40 CFR Part 190 if the individual reactors remain within twice the dose design objectives of Appendix I, and if direct radiation doses from the units are kept small.

The Special Report will describe a course of action that should result in the limitation of the annual dose to a MEMBER OF THE PUBLIC to within the 40 CFR Part 190 limits. For the purposes of the Special Report, it may be assumed that the dose commitment to the MEMBER of the PUBLIC from other uranium fuel cycle sources is negligible, with the exception that dose contributions from other nuclear fuel cycle facilities at the same site or within a radius of 8 km must be considered.

If the dose to any MEMBER OF THE PUBLIC is estimated to exceed the requirements of 40 CFR Part 190, the Special Report with a request for a variance (provided the release conditions resulting in violation of 40 CFR Part 190 have not already been corrected), in accordance with the provisions of 40 CFR 190.11 and 10 CFR 20.2203, is considered to be a timely request and fulfills the requirements of 40 CFR Part 190 until NRC staff action is completed. The variance only relates to the limits of 40 CFR Part 190, and does not apply in any way to the other requirements for dose limitation of 10 CFR Part 20, as addressed in Controls 2.2 and 3.2. An individual is not considered a MEMBER OF THE PUBLIC during any period in which he/she is engaged in carrying out any operation that is part of the nuclear fuel cycle.

CONTROL 4.1: LIMITS OF TOTAL DOSE TO MEMBERS OF THE PUBLIC (continued)

METHOD 4.1: LIMITS OF TOTAL DOSE TO MEMBERS OF THE PUBLIC, (continued)

Table 4.1-1

Transfer Factors for Maximum Dose to a
Person Offsite due to Radioactive Noble Gases

Air Dose Transfer Factors

Radionuclide	$P_{\gamma i}$ $\frac{mrem}{(\mu Ci\ sec/m^3)}$	$S_{\beta i}$ $\frac{mrem}{(\mu Ci\ sec/m^3)}$
Kr-83m	2.4 E-9	--
Kr-85m	3.7 E-5	4.6 E-5
Kr-85	5.1 E-7	4.2 E-5
Kr-87	1.9 E-4	3.1 E-4
Kr-88	4.7 E-4	7.5 E-5
Kr-89	5.3 E-4	3.2 E-4
Kr-90	4.9 E-4	2.3 E-4
Xe-131m	2.9 E-6	1.5 E-5
Xe-133m	8.0 E-6	3.1 E-5
Xe-133	9.3 E-6	9.7 E-6
Xe-135m	9.9 E-5	2.3 E-5
Xe-135	5.7 E-5	5.9 E-5
Xe-137	4.5 E-5	3.9 E-4
Xe-138	2.8 E-4	1.3 E-4
Ar-41	2.8 E-4	8.5 E-5

Ref: Regulatory Guide 1.109, Revision 1, Table B-1.

Note: Values in the regulatory guide are quoted in units of pCi yr, to convert to units of μCi sec multiply by a factor of 3.171 E-2.

CONTROL 4.1: LIMITS OF TOTAL DOSE TO MEMBERS OF THE PUBLIC (continued)

METHOD 4.1: LIMITS OF TOTAL DOSE TO MEMBERS OF THE PUBLIC, (continued)

Table 4.1-2
Transfer Factors for Maximum Offsite Air Dose

Air Dose Transfer Factors

Radionuclide	$A_{\gamma i}$ mrad (μCi sec/m^3)	$A_{\beta i}$ mrad (μCi sec/m^3)
Kr-83m	6.1 E-7	9.1 E-6
Kr-85m	3.9 E-5	6.2 E-5
Kr-85	5.4 E-7	6.2 E-5
Kr-87	2.0 E-4	3.3 E-4
Kr-88	4.8 E-4	9.3 E-5
Kr-89	5.5 E-4	3.4 E-4
Kr-90	5.2 E-4	2.5 E-4
Xe-131m	4.9 E-6	3.5 E-5
Xe-133m	1.0 E-5	4.7 E-5
Xe-133	1.1 E-5	3.3 E-5
Xe-135m	1.1 E-4	2.3 E-5
Xe-135	6.1 E-5	7.8 E-5
Xe-137	4.8 E-5	4.0 E-4
Xe-138	2.9 E-4	1.5 E-4
Ar-41	2.9 E-4	1.0 E-4

Ref : Regulatory Guide 1.109, Revision 1, Table B-1

Note : Values in the regulatory guide are in units of pCi*yr, to convert to units of μCi*sec multiply by a factor of 3.171 E-2.

SECTION 5

RADIOLOGICAL ENVIRONMENTAL MONITORING PROGRAM

5.0 RADIOLOGICAL ENVIRONMENTAL MONITORING PROGRAM

CONTROL 5.1 : CONDUCT OF SAMPLING AND ANALYSIS

The Radiological Environmental Monitoring Program shall be conducted as specified in Table 5.1-1.

APPLICABILITY: At all times.

ACTION :

a. With the Radiological Environmental Monitoring Program not being conducted as specified in Table 5.1-1, prepare and submit to the Commission, in the Annual Radiological Environmental Operating Report required by Control 1.4, a description of the reasons for not conducting the program as required and the plans for preventing a recurrence.

b. With the level of confirmed ** radioactivity as the result of plant effluents in an environmental sampling medium at a specified location exceeding the reporting levels of Table 5.1-2 when averaged over any calendar quarter, prepare and submit to the Commission within 30 days, pursuant to Control 1.6.6, a Special Report that identifies the cause(s) for exceeding the limit(s) and defines the corrective actions to be taken to reduce radioactive effluents so that the potential annual dose* to a MEMBER OF THE PUBLIC is less than the calendar year limits of Controls 2.3, 3.3, or 3.4. When more than one of the radionuclides in Table 5.1-2 are detected in the sampling medium, this report shall be submitted if :

$$\frac{\text{concentration (1)}}{\text{reporting level (1)}} + \frac{\text{concentration (2)}}{\text{reporting level (2)}} + \ldots \geq 1.0$$

When radionuclides other than those in Table 5.1-2 are detected and are the result of plant effluents, this report shall be submitted if the potential annual dose* to a MEMBER OF THE PUBLIC from all radionuclides is equal to or greater than the calendar year limits of Control 2.3, 3.3, or 3.4. This report is not required if the measured level of radioactivity was not the result of plant effluents; however, in such an event, the condition shall be reported and described in the Annual Radiological Environmental Operating Report required by Control 1.4

* The methodology and parameters used to estimate the potential annual dose to a MEMBER OF THE PUBLIC shall be indicated in this report.

** A confirmatory reanalysis of the original, a duplicate, or a new sample may be desirable, as appropriate. The results of the confirmatory analysis shall be completed at the earliest time consistent with the analysis, but in any case within 30 days.

5.0 RADIOLOGICAL ENVIRONMENTAL MONITORING PROGRAM

CONTROL 5.1 : CONDUCT OF SAMPLING AND ANALYSIS (continued)

ACTION (continued)

c. With milk or broad leaf vegetation samples unavailable from one or more of the sample locations required by Table 5.1-1, identify specific locations for obtaining replacement samples and add them within 30 days to the Radiological Environmental Monitoring Program given in this ODCM. The specific locations from which samples were unavailable may then be deleted from the monitoring program. Pursuant to Control 1.3, submit in the next Annual Radioactive Effluent Release Report documentation for a change in the ODCM including a revised figure(s) and table for this ODCM reflecting the new location(s) with supporting information identifying the cause of the unavailability of samples and justifying the selection of the new location(s) for obtaining samples.

d. The provisions of Administrative Control section 1.6.3 are not applicable.

SURVEILLANCE REQUIREMENTS

5.1.1 The radiological environmental monitoring samples shall be collected pursuant to Table 5.1-1 from the specific locations given in the table and figure(s) in this ODCM, and shall be analyzed pursuant to the requirements of Table 5.1-1 and the detection capabilities required by Table 5.1-3.

5.0 RADIOLOGICAL ENVIRONMENTAL MONITORING PROGRAM

CONTROL 5.1 : CONDUCT OF SAMPLING AND ANALYSIS (continued)

TABLE 5.1-1
RADIOLOGICAL ENVIRONMENTAL MONITORING PROGRAM[1]

EXPOSURE PATHWAY AND/OR SAMPLE	NUMBER OF REPRESENTATIVE SAMPLES AND SAMPLE LOCATIONS[2][3]	SAMPLING AND COLLECTION FREQUENCY[4]	TYPE AND FREQUENCY OF ANALYSIS[4]
1. Direct Radiation[5]	21 Monitoring Locations	Continuous Monitoring with Sample Collection Quarterly[6]	Gamma Exposure Rate - quarterly
2. Airborne Radioiodine and Particulates	Five Locations	Continuous Sampler Operation with sample collection at least weekly or more frequently if required by dust loading	Radioiodine Filter- Analysis for I-131 weekly Particulate filter - Gross beta radioactivity analysis ≥ 24 hours following filter change[7]; ; Gamma isotopic analysis[8] of composite[7] (by location) quarterly.
3. Waterborne[10] a. Surface[8] b. Sediment from Shoreline	 Three Locations[9] Three Locations	 Monthly Semiannually	 Gamma isotopic[8] and tritium analysis monthly. Gamma isotopic analysis[8] semiannually.
4. Ingestion a. Fish and Invertibrates 1. Crustacea 2. Fish b. Food Products 1. Broad Leaf Vegitation	 Two Locations Two Locations Three Locations (11)	 Semiannually Semiannually Monthly when available	 Gamma isotopic analysis[8] semiannually. Gamma isotopic analysis[8] semiannually. Gamma isotopic analysis [8] and I-131 analysis monthly.

5.0 RADIOLOGICAL ENVIRONMENTAL MONITORING PROGRAM

CONTROL 5.1 : CONDUCT OF SAMPLING AND ANALYSIS (continued)

TABLE NOTATIONS - TABLE 5.1-1 (Continued)

(1) Deviations are permitted from the required sampling schedule if specimens are unobtainable due to circumstances such as hazardous conditions, seasonal unavailability, and malfunction of automatic sampling equipment or other legitimate reasons. If specimens are unobtainable due to sampling equipment malfunction, corrective action shall be taken prior to the end of the next sampling period. All deviations from the sampling schedule shall be documented in the Annual Radiological Environmental Operating Report pursuant to Control 1.4

(2) Specific parameters of distance and direction sector from the centerline of the plant vent stack and additional description where pertinent, shall be provided for each and every sample location in Table 5.1-1 in a table and figure(s) in this ODCM.

(3) At times, it may not be possible or practicable to continue to obtain samples of the media of choice at the most desired location or time. In these instances suitable alternative media and locations may be chosen for the particular pathway in question and appropriate substitutions made within 30 days in the Radiological Environmental Monitoring Program given in this ODCM.

(4) The following definition of frequencies shall apply to Table 5.1-1 only:

Weekly - Not less than once per calendar week. A maximum interval of 11 days is allowed between the collection of any two consecutive samples.

Semi-Monthly - Not less than 2 times per calendar month with an interval of not less than 7 days between sample collections. A maximum interval of 24 days is allowed between collection of any two consecutive samples.

Monthly - Not less than once per calendar month with an interval of not less than 10 days between collection of any two consecutive samples.

Quarterly - Not less than once per calendar quarter.

Semiannually - One sample each between calendar dates (January 1 - June 30) and (July 1 - December 31). An interval of not less than 30 days will be provided between sample collections.

The frequency of analyses is to be consistent with the sample collection frequency.

5.0 RADIOLOGICAL ENVIRONMENTAL MONITORING PROGRAM

CONTROL 5.1 : CONDUCT OF SAMPLING AND ANALYSIS (continued)

TABLE NOTATIONS - TABLE 5.1-1 (continued)

(5) One or more instruments, such as a pressurized ion chamber, for measuring and recording dose rate continuously may be used in place of, or in addition to, integrating dosimeters. For the purposes of this table, a thermoluminescent dosimeter (TLD) is considered to be one phosphor; two or more phosphors in a packet are considered as two or more dosimeters

(6) Refers to normal collection frequency. More frequent sample collection is permitted when conditions warrant it.

(7) Airborne particulate sample filters are analyzed for gross beta radioactivity 24 hours or more after sampling to allow for radon and thoron daughter decay. In addition to the requirement for a gamma isotopic on a composite sample, a gamma isotopic is also required for each sample having a gross beta radioactivity which is > 1.0 pCi/m^3 and which is also > 10 times that of the most recent control sample.

(8) Gamma isotopic analysis means the identification and quantification of gamma-emitting radionuclides that may be attributable to the effluents from the facility.

(9) Off-shore grab samples.

(10) Discharges from the Turkey Point Plant do not influence drinking water or ground water pathways.

(11) Samples of broad leaf vegetation grown nearest each of two different offsite locations of highest predicted annual average ground level D/Q, and one sample of similar broad leaf vegetation at an available location 15-30 km distant in the least prevalent wind direction based upon historical data in this ODCM.

5.0 RADIOLOGICAL ENVIRONMENTAL MONITORING PROGRAM
CONTROL 5.1 : CONDUCT OF SAMPLING AND ANALYSIS (continued)

TABLE 5.1-2

REPORTING LEVELS FOR RADIOACTIVITY CONCENTRATIONS IN ENVIRONMENTAL SAMPLES

ANALYSIS	WATER (pCi/l)	AIRBORNE PARTICULATE OR GASES (pCi/m^3)	FISH (pCi/kg, wet)	MILK (pCi/l)	FOOD PRODUCTS (pCi/kg, wet)
H-3	30,000*				
Mn-54	1,000		30,000		
Fe-59	400		10,000		
Co-58	1,000		30,000		
Co-60	300		10,000		
Zn-65	300		20,000		
Zr-Nb-95***	400				
I-131	2**	0.9		3	100
Cs-134	30	10	1,000	60	1,000
Cs-137	50	20	2,000	70	2,000
Ba-La-140***	200			300	

* Since no drinking water pathway exists, a value of 30,000 pCi/l is used. For drinking water samples a value of 20,000 pCi/l is used. This is a 40 CFR 141.16 Table A value.

** Applies to drinking water

*** An equilibrium mixture of the parent and daughter isotopes which corresponds to the reporting value of the parent isotope

5.0 RADIOLOGICAL ENVIRONMENTAL MONITORING PROGRAM
CONTROL 5.1 : CONDUCT OF SAMPLING AND ANALYSIS (continued)

TABLE 5.1-3

DETECTION CAPABILITIES FOR ENVIRONMENTAL SAMPLE ANALYSIS[1]

LOWER LIMIT OF DETECTION (LLD) [2][3]

ANALYSIS	WATER (pCi/l)	AIRBORNE PARTICULATE OR GASES (pCi/m^3)	FISH (pCi/kg, wet)	SEDIMENT (pCi/kg, dry)	MILK (pCi/l)	FOOD PRODUCTS (pCi/kg, wet)
Gross Beta	4	0.01				
H-3	3,000*					
Mn-54	15		130			
Fe-59	30		260			
Co-58	15		130			
Co-60	15		130			
Zn-65	30		260			
Zr-Nb-95***	15[5]					
I-131	1[4]	0.07			1	60
Cs-134	15	0.05	130	150	15	60
Cs-137	18	0.06	150	180	18	80
Ba-La-140***	15[5]				15[5]	

* Since no drinking water pathway exists, a value of 3,000 pCi/l is used. For drinking water samples a value of 2,000 pCi/l is used. Source NUREG-0472, Rev. 3. +

*** An equilibrium mixture of the parent and daughter isotopes which corresponds to the reporting value of the parent isotope

5.0 RADIOLOGICAL ENVIRONMENTAL MONITORING PROGRAM

CONTROL 5.1 : CONDUCT OF SAMPLING AND ANALYSIS (continued)

TABLE NOTATIONS - TABLE 5.1-3 (Continued)

(1) This list does not mean that only these nuclides are to be considered. Other peaks that are identifiable, together with those of the above nuclides, shall also be analyzed and reported in the Annual Radiological Environmental Operating Report pursuant to Control 1.4.

(2) Required detection capabilities for thermoluminescent dosimeters used for environmental measurements are given in Regulatory Guide 4.13.

(3) The LLD is defined, for purposes of these controls, as the smallest concentration of radioactive material in a sample that will yield a net count, above system background, that will be detected with 95% probability with only 5% probability of falsely concluding that a blank observation represents a "real" signal.

For a particular measurement system, which may include radiochemical separation:

$$LLD = \frac{4.66\,(S_b)}{E \cdot V \cdot 2.22 \cdot Y \cdot [\exp(-\lambda\Delta t)]}$$

Where:

LLD = the "a priori" lower limit of detection as defined above as picoCuries per unit mass or volume,

S_b = the standard deviation of the background counting rate or of the counting rate of a blank sample as appropriate (counts per minute),

E = the counting efficiency (counts per disintegration),

V = the sample size (units of mass or volume),

2.22 = the number of disintegrations per minute per picoCurie,

Y = the fractional radiochemical yield, when applicable,

λ = the radioactive decay constant for the particular radionuclide

Δt = the elapsed time between environmental collection, or end of the sample collection period, and time of counting (sec).

Typical values of E, V, Y, and Δt should be used in the calculation.

5.0 RADIOLOGICAL ENVIRONMENTAL MONITORING PROGRAM

CONTROL 5.1 : CONDUCT OF SAMPLING AND ANALYSIS (continued)

TABLE NOTATIONS (continued) - TABLE 5.1-3 (continued)

(3) The LLD is defined (continued)

It should be recognized that the LLD is defined as an a priori (before the fact) limit representing the capability of a measurement system and not as an a posteriori (after the fact) limit for a particular measurement. Analyses shall be performed in such a manner that the stated LLDs will be achieved under routine conditions. Occasionally background fluctuations, unavoidable small sample sizes, the presence of interfering nuclides, or other uncontrollable circumstances may render these LLDs unachievable. In such cases, the contributing factors shall be identified and described in the Annual Radiological Environmental Operating Report pursuant to Control 1.4.

(4) LLD for drinking water. If no drinking water pathway exists, a value of 15pCi/l may be used.

(5) An equilibrium mixture of the parent and daughter isotopes which corresponds to 15 pCi/l of the parent isotope.

METHOD 5.1: RADIOLOGICAL ENVIRONMENTAL SURVEILLANCE - TURKEY POINT PLANT

It is the policy of Florida Power and Light Company (FPL) that the Turkey Point 3 and 4, Radiological Environmental Monitoring Programs, (REMP), are conducted by the State of Florida Department of Health (DOH), pursuant to an Agreement between FPL and DOH. The policy also states that the coordination of the REMP with DOH and compliance with the REMP requirements are the responsibility of the Nuclear Division Health Physics/Chemistry Staff.

The following pages describe the actual sampling and analysis program implemented to satisfy ODCM Table 5.1-1.

5.0 RADIOLOGICAL ENVIRONMENTAL MONITORING PROGRAM

CONTROL 5.1 : CONDUCT OF SAMPLING AND ANALYSIS (continued)

RADIOLOGICAL ENVIRONMENTAL SURVEILLANCE
Key to Sample Locations

Pathway	Location	Description	Samples Collected	Sample Collection Frequency	Approx. Distance (miles)	Direction Sector
Direct Radiation	N-2	Convoy Point	TLD	Quarterly	2	N
Direct Radiation	N-7	Black Point Marina parking lot on siren pole	TLD	Quarterly	7.1	N
Direct Radiation	N-10	Old Cutler Rd across from Perdue Med. Ctr. on siren pole.	TLD	Quarterly	10.6	N
Direct Radiation	NNW-2	East end of N. Canal Dr. on siren pole E. of 117th Ave.	TLD	Quarterly	2.2	NNW
Direct Radiation	NNW-10	Bailes Rd. E. of US 1 on siren pole.	TLD	Quarterly	9.2	NNW
Direct Radiation	NW-1	Turkey Point Entrance Rd	TLD	Quarterly	3	NW
Direct Radiation	NW-5	Intersection of Mowry Dr. & 117th Ave. on siren pole.	TLD	Quarterly	3.9	NW

5.0 RADIOLOGICAL ENVIRONMENTAL MONITORING PROGRAM

CONTROL 5.1 : CONDUCT OF SAMPLING AND ANALYSIS (continued)

RADIOLOGICAL ENVIRONMENTAL SURVEILLANCE
Key to Sample Locations

Pathway	Location	Description	Samples Collected	Sample Collection Frequency	Approx. Distance (miles)	Direction Sector
Direct Radiation	NW-10	On Newtown Rd. N. of Coconut Palm Drive on siren pole.	TLD	Quarterly	10	NW
Direct Radiation	W-5	Palm Drive 0.3 mi. west of Tallahassee Rd.	TLD	Quarterly	5.3	W
Direct Radiation	WNW-10	NW 2nd Ave. S. of Campbell Dr. at Hmstd. Middle School on siren pole.	TLD	Quarterly	9.8	WNW
Direct Radiation	W-1	On site north side of Discharge Canal.	TLD	Quarterly	0.7	W
Direct Radiation	W-9	Card Sound Rd. 0.6 mi. SSE of US 1 on siren pole.	TLD	Quarterly	8.6	W
Direct Radiation	WSW-8	Card Sound Rd. 3.4 mi. SSE of US 1 on siren pole.	TLD	Quarterly	7.8	WSW
Direct Radiation	SW-1	On site near land utilization offices	TLD	Quarterly	1	SW

5.0 RADIOLOGICAL ENVIRONMENTAL MONITORING PROGRAM

CONTROL 5.1 : CONDUCT OF SAMPLING AND ANALYSIS (continued)

RADIOLOGICAL ENVIRONMENTAL SURVEILLANCE
Key to Sample Locations

Pathway	Location	Description	Samples Collected	Sample Collection Frequency	Approx. Distance (miles)	Direction Sector
Direct Radiation	SSE-1	On site South East side of cooling canals at "Turtle Point"	TLD	Quarterly	1	SSE
Direct Radiation	SW-8	Card Sound Rd. 5 mi. SSE of US 1 at entrance to Navy facility.	TLD	Quarterly	8	SW
Direct Radiation	SSW-5	On site, southwest corner of cooling canals	TLD	Quarterly	5	SSW
Direct Radiation	SSW-10	At Card Sound Bridge on siren pole.	TLD	Quarterly	10	SSW
Direct Radiation	S-5	On site, south east end of cooling canals.	TLD	Quarterly	5	S
Direct Radiation	S-10	Card Sound Road at Steamboat Creek.	TLD	Quarterly	10	S

5.0 RADIOLOGICAL ENVIRONMENTAL MONITORING PROGRAM

CONTROL 5.1 : CONDUCT OF SAMPLING AND ANALYSIS (continued)

RADIOLOGICAL ENVIRONMENTAL SURVEILLANCE
Key to Sample Locations

Pathway	Location	Description	Samples Collected	Sample Collection Frequency	Approx. Distance (miles)	Direction Sector
Direct Radiation	SSE-10	Ocean Reef	TLD	Quarterly	9	SSE
Direct Radiation	NNE-22*	Natoma Substation	TLD	Quarterly	22.6	NNE
Airborne	T51	Entrance to Homestead Bayfront Park	Radioiodine and Particulate	Weekly	2.2	NNW
Airborne	T57	Siren pole 27, intersection of SW 112th Ave and SW 304th St.	Radioiodine and Particulate	Weekly	4	NW
Airborne	T58	Turkey Point Entrance Rd	Radioiodine and Particulate	Weekly	1.3	NW

* Denotes control sample

5.0 RADIOLOGICAL ENVIRONMENTAL MONITORING PROGRAM

CONTROL 5.1 : CONDUCT OF SAMPLING AND ANALYSIS (continued)

RADIOLOGICAL ENVIRONMENTAL SURVEILLANCE
Key to Sample Locations

Pathway	Location	Description	Samples Collected	Sample Collection Frequency	Approx. Distance (miles)	Direction Sector
Airborne	T64*	Natoma Substation	Radioiodine and Particulate	Weekly	22	NNE
Airborne	T72	Turkey Point Land Utilization Entrance	Radioiodine and Particulate	Weekly	<1	WSW
Waterborne	T42	Biscayne Bay, at Turkey Point	Surface Water Shoreline Sediment	Monthly Semi-annually	<1	ENE
Waterborne	T67*	Biscayne Bay, vicinity of Cutler Plant north to Matheson Hammock Park	Surface Water Shoreline Sediment	Monthly Semi-annually	13-18	N,NNE
Waterborne	T81	Card Sound, near mouth of old discharge canal	Surface Water Shoreline Sediment	Monthly Semi-annually	6	S

* Denotes control sample.

5.0 RADIOLOGICAL ENVIRONMENTAL MONITORING PROGRAM

CONTROL 5.1 : CONDUCT OF SAMPLING AND ANALYSIS (continued)

RADIOLOGICAL ENVIRONMENTAL SURVEILLANCE
Key to Sample Locations

Pathway	Location	Description	Samples Collected	Sample Collection Frequency	Approx. Distance (miles)	Direction Sector
Food Products	T67*	Biscayne Bay, vicinity of Cutler Plant north to Matheson Hammock Park	Crustacea Fish	Semi-annually Semi-annually	13-18	N,NNE
Food Products	T81	Card Sound near mouth of old Discharge Canal.	Crustacea Fish	Semi-annually Semi-annually	6	S
Food Products	T40	South of Palm Dr. on SW 117th St extension	Broad leaf vegetation	Monthly	3	W / WNW
Food Products	T41	Palm Dr. West of FPL wellness center near the site boundary	Broad leaf vegetation	Monthly	2	WNW
Food Products	T67*	Near Biscayne Bay, Vicinity of Cutler Plant North to Matheson Hammock Park	Broad leaf vegetation	Monthly	13 - 18	N, NNE

* Denotes control sample.

CONTROL 5.1 : CONDUCT OF SAMPLING AND ANALYSIS (continued)

BASES 5.1 : MONITORING PROGRAM

The Radiological Environmental Monitoring Program required by this control provides representative measurements of radiation and of radioactive materials in those exposure pathways and for those radionuclides that lead to the highest potential radiation exposure of MEMBERS OF THE PUBLIC resulting from the plant operation. This monitoring program implements Section IV.B.2 of Appendix I to 10 CFR Part 50 and thereby supplements the Radiological Effluent Monitoring Program by verifying that the measurable concentrations of radioactive materials and levels of radiation are not higher than expected on the basis of the effluent measurements and the modeling of the environmental exposure pathways.

The required detection capabilities for environmental sample analyses are tabulated in terms of the lower limits of detection (LLDs). The LLDs required by Table 5.1-3 are considered optimum for routine environmental measurements in industrial laboratories. It should be recognized that the LLD is defined as an a priori (before the fact) limit representing the capability of a measurement system and not as an a posteriori (after the fact) limit for a particular measurement.

Detailed discussion of the LLD, and other detection limits, can be found in Currie, L. A., "Lower Limit of Detection: Definition and Elaboration of a Proposed Position for Radiological Effluent and Environmental Measurements," NUREG/CR-4007 (September 1984), in HASL Procedures Manual, HASL-300 and Hartwell, J. K. "Detection Limits for Radioanalytical Counting Techniques," Atlantic Richfield Hanford Company Report ARH-SA-215 (June 1975).

NEAR SITE SAMPLING LOCATIONS

Figure 5.1-1

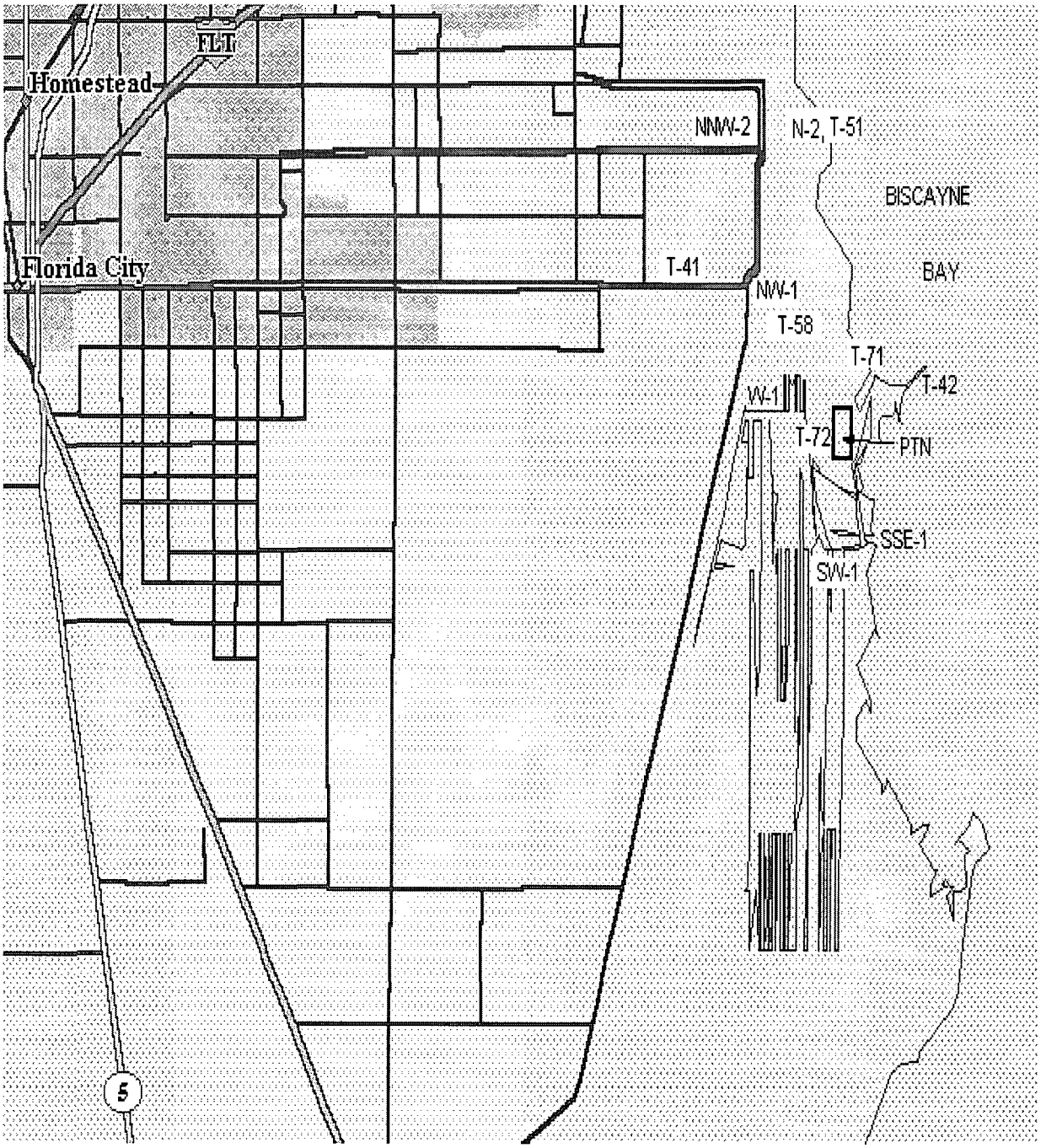

DISTANT REMP SAMPLING LOCATIONS

Figure 5.1-2

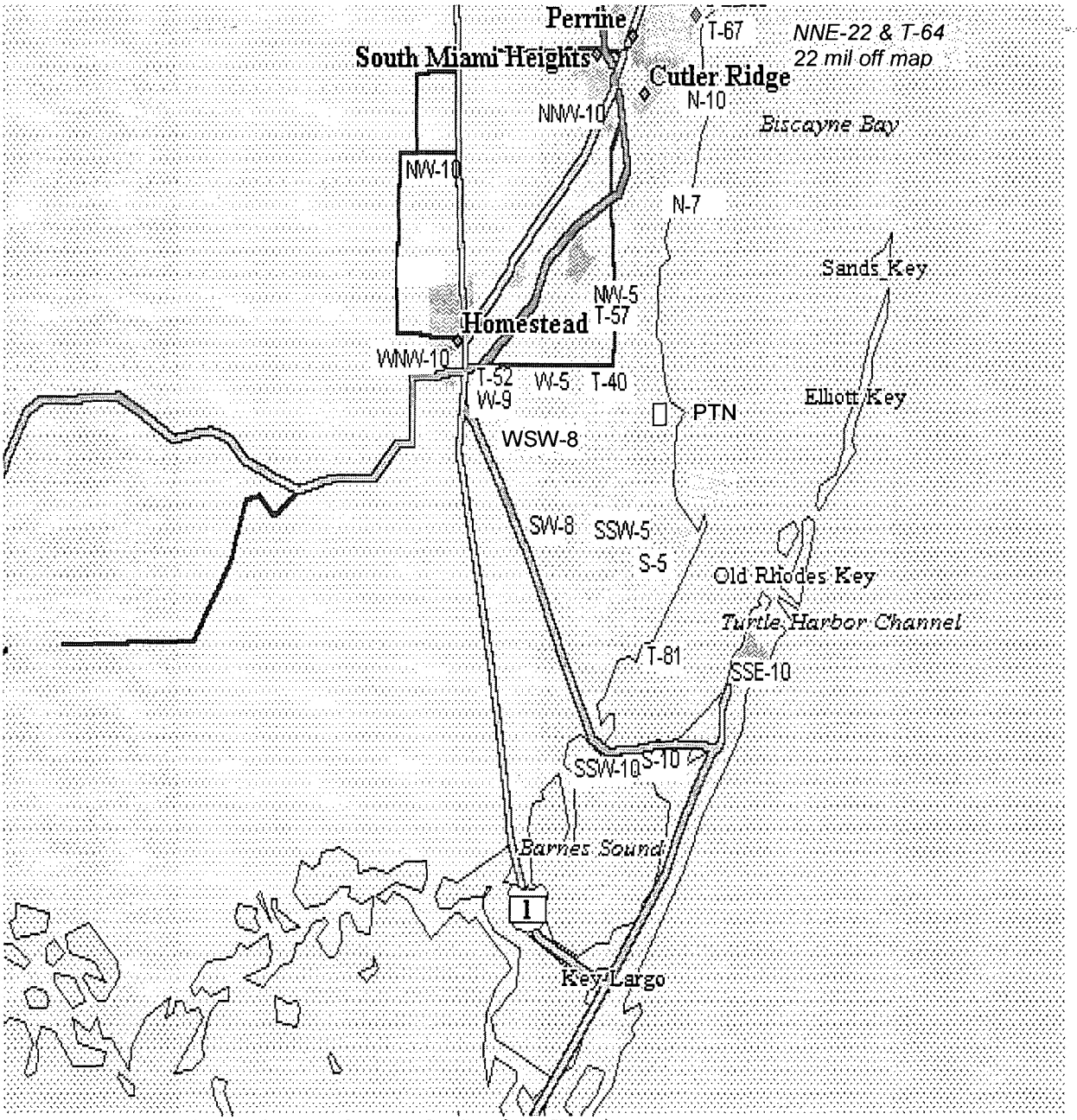

NNE-22 and T-64 are 22 miles from Turkey Point and outside the map area

5.0 RADIOLOGICAL ENVIRONMENTAL MONITORING PROGRAM

CONTROL 5.2 : LAND USE CENSUS

A Land Use Census shall be conducted and shall identify within a distance of 8 km (5 miles) the location, in each of the 16 meteorological sectors, of the nearest milk animal, the nearest residence, and the nearest gardens* of greater than 50 m^2 (500 ft^2) producing broad leaf vegetation.

APPLICABILITY : At all times.

ACTION :

a. With a Land Use Census identifying a location(s) that yields a calculated dose or dose commitment greater than the values currently being calculated in Control 3.4, pursuant to Control 1.3, identify the new location(s) in the next Annual Radioactive Effluent Release Report.

b. With a Land Use Census identifying a location(s) that yields a calculated dose or dose commitment (via the same exposure pathway) 20% greater than at a location from which samples are currently being obtained in accordance with Control 5.1, add the new location(s) within 30 days to the Radiological Environmental Monitoring Program given in this ODCM. The sampling location(s), excluding the control station location, having the lowest calculated dose or dose commitment(s), via the same exposure pathway, may be deleted from this monitoring program after October 31 of the year in which this Land Use Census was conducted. Pursuant to Control 1.3, submit in the next Annual Radioactive Effluent Release Report documentation for a change to this ODCM including a revised figure(s) and table(s) for the ODCM reflecting the new location(s) with information supporting the change in sampling locations.

c. The provisions of Administrative Control section 1.6.3 are not applicable.

* Broad leaf vegetation sampling may be performed at the SITE BOUNDARY in each of two different direction sectors with the highest predicted D/Qs in lieu of the garden census. Specifications for broad leaf vegetation sampling in Table 5.1-1, Part 4.b., shall be followed, including analysis of control samples.

5.0 RADIOLOGICAL ENVIRONMENTAL MONITORING PROGRAM

SURVEILLANCE REQUIREMENTS

5.2.1 The Land Use Census shall be conducted during the growing season at least once per 12 months using that information that will provide the best results, such as by a door-to-door survey, aerial survey, or by consulting local agriculture authorities. The results of the Land Use Census shall be included in the Annual Radiological Environmental Operating Report pursuant to Control 1.4

BASIS 5.2 : LAND USE CENSUS

This control is provided to ensure that changes in the use of areas at and beyond the SITE BOUNDARY are identified and that modifications to the Radiological Environmental Monitoring Program are made if required by the results of this census. The best information from the door-to-door survey, from aerial survey or from consulting with local agricultural authorities shall be used. This census satisfies the requirements of Section IV.B.3 of Appendix I to 10 CFR Part 50. Restricting the census to gardens of greater than 50 m^2 provides assurance that significant exposure pathways via leafy vegetables will be identified and monitored since a garden of this size is the minimum required to produce the quantity (26 kg/year) of leafy vegetables assumed in Regulatory Guide 1.109 for consumption by a child. To determine this minimum garden size, the following assumptions were made: (1) 20% of the garden was used for growing broad leaf vegetation (i.e., similar to lettuce and cabbage), and (2) a vegetation yield of 2 kg/m2.

CONTROL 5.3: INTERLABORATORY COMPARISON PROGRAM

Analyses shall be performed on all samples, supplied as part of an Interlaboratory Comparison Program, that correspond to the matrices shown on Table 5.3-1

This control may be satisfied by participation in a government sponsored radiological measurements Intercomparison program that involves at least three of the matrices shown in Table 5.3-1

APPLICABILITY: At all times.

ACTION:

a. With analysis not being performed as required above, report the corrective actions taken to prevent recurrence to the Commission in the Annual Radiological Environmental Operating Report pursuant to Control 1.4.

b. The provisions of Control 1.6.3 are not applicable.

SURVEILLANCE REQUIREMENTS:

5.3.1 A summary of the results obtained, as part *of* the above required Interlaboratory Comparison Program shall be included in the Annual Radiological Environmental Operating Report pursuant to Control 1.4.

METHOD 5.3:

5.3.1 The Program shall be conducted such that on an annual basis:
At least three of the matrices will be involved, and at least two of the analytical methods will be evaluated, and for Gamma Spectroscopy, a majority of the nuclides shown in Table 5.3-1 will be included.

5.3.2 Any laboratory approved by FP&L may provide samples for the Intercomparison Program provided that the radioisotopes used for sample preparation are traceable to the National Institute of Standards and Technology (NIST).

METHOD 5.3: (continued)

5.3.3 Analysis of Matrix samples shall be capable of achieving ODCM Table 5.1-3 prescribed Lower Limit of Detection (LLD) on a blank sample.

5.3.4 Results within 20% of expected should be considered acceptable. Results exceeding 20% but within 35% require a description of probable cause and actions performed to bring the analysis into conformance. Results exceeding 35% are considered Not Acceptable; the Matrix shall be replaced and reanalyzed.

BASIS 5.3: INTERLABORATORY COMPARISON PROGRAM

The requirement for participation in an approved Interlaboratory Comparison Program is provided to ensure that independent checks on the precision and accuracy of the measurements of radioactive materials in environmental sample matrices are performed as part of the quality assurance program for environmental monitoring in order to demonstrate that the results are valid for the purposes of Section IV.B.2 of Appendix I to 10 CFR 50.

The Interlaboratory Comparison Program described herein provides an independent check on the precision and accuracy of the radiological monitoring measurements conducted as part of the Radiological Environmental Monitoring Program. The purpose of the Interlaboratory Comparison Program described in this appendix is to provide adequate confidence in the results of Turkey Point's radiological monitoring measurements, by providing an independent test of the ability to measure radionuclides in the sample medium.

TABLE 5.3-1

INTERLABORATORY COMPARISON PROGRAM SAMPLE ANALYSIS (1)

Analytical Method (2)	ANALYSIS	WATER (3)	AIRBORNE PARTICULATE OR GASES	SOIL	VEGETATION
GB	Gross Beta		X		
H3	H-3	X			
GS	Co-57		X		
	Co-60	X	X		X
	Cs-134	X	X		
	Cs-137	X	X	X	X
	Ce-144		X		
	Mn-54		X		
	K-40			X	X
	Ru-106		X		
	Sb-125		X		

TABLE NOTATIONS

1. The sample matrices shown on table 5.3-1 correspond to the matrices shown in Tables 5.1-1 & 5.1-2, with the following exceptions:

   a. Milk is not currently in the REMP sampling program; there are no milk animals in the area encompassed by the Land Use Census. Therefore, inclusion of milk samples in the Interlaboratory Comparison Program is not required. Continued exclusion of milk in the Interlaboratory Comparison Program is acceptable until the Land Use Census indicates the existence of milk producing animals within the geographic area covered by REMP; see note 3, below.

   b. The INGESTION exposure pathway is represented by inclusion of Broad Leaf Vegetation in the Interlaboratory Comparison Program cross checks. Fish and Invertebrate samples are not included in the cross check program due to the instability of maintaining radioactivity in a fixed matrix due to decaying tissue and refrigeration limitations.

2. The analytical methods to be evaluated are those applied in the current REMP:

   a. GB – Gross Beta analysis of an Air Filter matrix

   b. H3 – Tritium in water, using method employed in REMP

   c. GS – Gamma Spectroscopy, Quantitative.

3. The Gamma Spectroscopy method for water will suffice for Gamma Spectroscopy of Milk, should milk samples become available. Milk is over 98 % water.

Turkey Point Supplemental Radiological Environmental Monitoring Program

Appendix 5A

Turkey Point Supplemental REMP Sampling

The sampling and analysis program outlined in this appendix is performed in addition to the sample and analysis program required by Control 5.1. The sample sites, frequency, and analyses have been agreed upon by the State of Florida Department of Health and Florida Power and Light Co. These samples are not required to be performed, but based on this agreement, are performed to provide a broader data base for the Radiological Environmental Monitoring Program.

Turkey Point Supplemental REMP Sampling

Pathway: Direct Exposure via TLD

Sampling and Collection Frequency: Continuous monitoring with sample collection and analysis performed quarterly.

Name #	Description
NNW - 6	Siren S29 pole, NE corner Moody Dr. (SW 268 St) & Allapattah (SW 112 Av)
NW - 7	Siren S28 pole, E side Pine Island Rd (SW 132 Av) & N of Waldin Dr (SW 280 St.)
NW - 8	Siren S7 pole, SW 152 Av at E end of SW 248 St
WNW - 2	FPL Satellite School, cement pole in school yard
WNW - 3	Siren S21 pole, NW corner Palm Dr and Allapattah Rd (SW 117 Av)
WNW - 6	Siren S25 pole, W side Tallahassee Rd (SW 137 Av), N of Moody Dr
W - 8	Florida City Substation
ENE - 1	E end of 'Turkey Point', past Ranger Station
T71	on site "Red Barn" picnic area
T72	on site, just outside LU entrance

name = bearing - approx range, miles

Pathway: Airborne Radioiodines and particulates

Sampling and Collection Frequency : Continuous monitoring with sample collection and analysis performed weekly.

Name	Sector	Distance *	Description
T41	WNW	2	FPL Satellite School, cement pole in school yard
T52	W	8	Florida City Substation
T56	N	7	SW corner parking lot @ Black Point Marina
T71	NNE	0.5	on site "Red Barn" picnic area

* Approximate Distance from plant in miles

Turkey Point Supplemental REMP Sampling

Pathway: Waterborne, Surface Water

Sampling and Collection Frequency: Monthly

Name	Sector	Distance*	Description
T75	NW	1.2	Florida City Canal (~ cross-street from satellite school)
T84	WSW	0.5	Cooling canal, discharge, ~ by bridge to parking lot
T97	E	0.2	Cooling Canal, intake, ~ Air Force school area
T08	S	5.5	Southern shore of canal system, west of Grand Canal Bridge

* Approximate Distance from plant in miles

Pathway: Waterborne, Vegetation

Sampling and Collection Frequency: Quarterly

Name	Description
T84	'Seaweed' from any location in the cooling canal

Pathway: Waterborne, Sediment

Sampling and Collection Frequency: A = Annual S = Semiannual
(All Locations are the Cooling Canals)

Name	SCF	Description
T01	A	~ Air Force school area
T02	A	West side of dam @ 'old intake'
T03	A	North end of collector canals, west of 'Grand Canal'
T04	A	In front (east) of LU offices
T05 / T84	S	Cooling canal, discharge, ~ by bridge to parking lot
T06 / T85	S	NW corner of canal system
T07	A	SW corner of canal system
T08	A	South end of main canal, near bridge
T09	A	'Old Discharge Canal' at bend south of earth dam
T10	A	SE corner of canal system

Pathway: Ingestion, Milk

Sampling and Collection Frequency: Semiannual collection and Gamma-Spec analysis

Name	Sector	Distance *	Description
T99	WNW	12	183rd block of SW 262nd St.
(alt)	W	10	134th block of SW 224th St.

Pathway: Ingestion, Fish

Sampling and Collection Frequency: semi-annual collection and Gamma-Spec analysis

Name #	Sector	Distance *	Description
T84	---	---	Cooling Canal

Pathway: Ingestion, Food Crop

Sampling and Collection Frequency: Annual collection (@ harvest) and Gamma-Spec analysis

Name #	Sector	Distance *	Description
T43	Various locations: N thru NW to W typically 2 to 10 miles from plant		Various locations : 'truck farm' point of sale growing fields, miscellaneous other sources of locally grown food crops (e.g., corn, potato, sugar cane, greens, etc)
T44			
T45			

Although the Name remains the same, the locations can vary with sample availability.

* Approximate Distance from plant in miles.

Turkey Point Groundwater Sampling Program to Support the INDUSTRY INITIATIVE on Groundwater Protection

Appendix 5B

Turkey Point Nuclear will establish and maintain a sampling and analysis program to meet the requirements of NEI 07-07, Industry Ground Water Protection Initiative and future revisions to the document.

Specific actions and requirements of the program will be controlled by site and corporate procedures. Periodic reviews of the program will be performed to meet the recommendations of NEI 07-07, Industry Ground Water Protection Initiative. Locations of the monitoring wells and the depths and construction were chose following a study of geology and hydrology of the site.