PMComanchePekNPEm Resource

From: Monarque, Stephen
Sent: Thursday, February 25, 2010 8:59 AM
To: ComanchePeakCOL Resource
Subject: FW: Supplemental Information for RAI 1889 (CP 11) and 3698 (CP 109) - SUNSI review needs to be done non public
Attachments: TXNB-10011 Supp to RAI 11 and 109.pdf

From: John.Conly@luminant.com [mailto:John.Conly@luminant.com]
Sent: Tuesday, February 23, 2010 1:01 PM
To: rjb@nei.org; david.beshear@txu.com; Biggins, James; rbird1@luminant.com; mike.blevins@luminant.com; Dennis.Buschbaum@luminant.com; russell_bywater@mnes-us.com; JCaldwell@luminant.com; Ronald.Carver@luminant.com; cp34update@certrec.com; Ciocco, Jeff; Timothy.Clouser@luminant.com; Collins, Elmo; John.Conly@luminant.com; Carolyn.Cosentino@luminant.com; brock.degeyter@energyfutureholdings.com; nancy.douglas@txu.com; Eric.Evans@luminant.com; Rafael.Flores@luminant.com; sfrantz@morganlewis.com; Goldin, Laura; Hamzehee, Hossein; kazuya_hayashi@mnes-us.com; masaya_hoshi@mnes-us.com; mutsumi_ishida@mnes-us.com; Johnson, Michael; Kallan, Paul; masahiko_kaneda@mnes-us.com; kak@nei.org; Allan.Koenig@luminant.com; Kramer, John; mlucas3@luminant.com; Fred.Madden@luminant.com; Matthews, David; tmatthews@morganlewis.com; Monarque, Stephen; Ashley.Monts@luminant.com; Bill.Moore@luminant.com; masanori_onozuka@mnes-us.com; ck_paulson@mnes-us.com; Plisco, Loren; Robert.Reible@luminant.com; jrund@morganlewis.com; jeff.simmons@energyfutureholdings.com; Singal, Balwant; nan_sirirat@mnes-us.com; Takacs, Michael; joseph_tapia@mnes-us.com; Tindell, Brian; Bruce.Turner@luminant.com; Vrahoretis, Susan; Ward, William; Matthew.Weeks@luminant.com; Willingham, Michael; Donald.Woodlan@luminant.com; diane_yeager@mnes-us.com
Cc: James.Hill2@luminant.com
Subject: Supplemental Information for RAI 1889 (CP 11) and 3698 (CP 109)

The wrong letter was attached to this e-mail yesterday. The letter is now correct.

Luminant has submitted supplemental information for the two subject RAIs. The attached file is almost 8 Mb, so the NRC addressees may have their e-mail blocked. Stephen Monarque has received a CD with the complete letter on it. If there are any questions regarding the supplemental information, contact me or contact Don Woodlan (254-897-6887, Donald.Woodlan@luminant.com).

Thanks,

John Conly

Luminant
COLA Project Manager
(254) 897-5256

Confidentiality Notice: This email message, including any attachments, contains or may contain confidential information intended only for the addressee. If you are not an intended recipient of this message, be advised that any reading, dissemination, forwarding, printing, copying or other use of this message or its attachments is

strictly prohibited. If you have received this message in error, please notify the sender immediately by reply message and delete this email message and any attachments from your system.

Hearing Identifier: ComanchePeak_COL_NonPublic
Email Number: 1442

Mail Envelope Properties (9C2386A0C0BC584684916F7A0482B6CA0B9172439A)

Subject: FW: Supplemental Information for RAI 1889 (CP 11) and 3698 (CP 109) - SUNSI review needs to be done non public
Sent Date: 2/25/2010 8:59:24 AM
Received Date: 2/25/2010 8:59:33 AM
From: Monarque, Stephen

Created By: Stephen.Monarque@nrc.gov

Recipients:
"ComanchePeakCOL Resource" <ComanchePeakCOL.Resource@nrc.gov>
Tracking Status: None

Post Office: HQCLSTR02.nrc.gov

Files	**Size**	**Date & Time**
MESSAGE	2769	2/25/2010 8:59:33 AM
TXNB-10011 Supp to RAI 11 and 109.pdf	7625219	

Options
Priority: Standard
Return Notification: No
Reply Requested: No
Sensitivity: Normal
Expiration Date:
Recipients Received:

Rafael Flores
Senior Vice President &
Chief Nuclear Officer
rafael.flores@luminant.com

Luminant Power
P O Box 1002
6322 North FM 56
Glen Rose, TX 76043

T 254.897.5590
F 254.897.6652
C 817.559.0403

CP-201000246
Log # TXNB-10011

Ref. # 10 CFR 52

February 22, 2010

U. S. Nuclear Regulatory Commission
Document Control Desk
Washington, DC 20555
ATTN: David B. Matthews, Director
Division of New Reactor Licensing

SUBJECT: COMANCHE PEAK NUCLEAR POWER PLANT, UNITS 3 AND 4
DOCKET NUMBERS 52-034 AND 52-035
SUPPLEMENTAL INFORMATION FOR RESPONSES TO REQUESTS FOR ADDITIONAL INFORMATION NO. 1889 AND 3698

Dear Sir:

Luminant Generation Company LLC (Luminant) submits herein supplemental information for the responses to Requests for Additional Information No. 1889 and 3698 for the Combined License Application for Comanche Peak Nuclear Power Plant Units 3 and 4. The affected Final Safety Analysis Report pages are included with the responses. For the convenience of the NRC, the enclosed CD includes all of the revised FSAR pages and figures in addition to the hard copies included with the letter.

Should you have any questions regarding these responses, please contact Don Woodlan (254-897-6887, Donald.Woodlan@luminant.com) or me.

There are no commitments in this letter. Submittal of FSAR Figure 9.5.1-201 herein closes Commitment #6081 from TXNB-09071 dated November 20, 2009 (ML093280698).

I state under penalty of perjury that the foregoing is true and correct.

Executed on February 22, 2010.

Sincerely,

Luminant Generation Company LLC

Rafael Flores

Rafael Flores

Attachments:
1. Supplemental Response to Request for Additional Information No. 1889 (CP RAI #11)
2. Supplemental Response to Request for Additional Information No. 3698 (CP RAI #109)

Electronic distribution w/attachments

mike.blevins@luminant.com
Rafael.Flores@luminant.com
mlucas3@luminant.com
jeff.simmons@energyfutureholdings.com
Bill.Moore@luminant.com
Brock.Degeyter@energyfutureholdings.com
rbird1@luminant.com
Matthew.Weeks@luminant.com
Allan.Koenig@luminant.com
Timothy.Clouser@luminant.com
Ronald.Carver@luminant.com
David.Volkening@luminant.com
Bruce.Turner@luminant.com
Eric.Evans@luminant.com
Robert.Reible@luminant.com
donald.woodlan@luminant.com
John.Conly@luminant.com
JCaldwell@luminant.com
David.Beshear@txu.com
Ashley.Monts@luminant.com
Fred.Madden@luminant.com
Dennis.Buschbaum@luminant.com
Carolyn.Cosentino@luminant.com

Luminant Records Management

masahiko_kaneda@mnes-us.com
masanori_onozuka@mnes-us.com
ck_paulson@mnes-us.com
joseph_tapia@mnes-us.com
russell_bywater@mnes-us.com
diane_yeager@mnes-us.com
kazuya_hayashi@mnes-us.com
mutsumi_ishida@mnes-us.com
nan_sirirat@mnes-us.com
masaya_hoshi@mnes-us.com
rjb@nei.org
kak@nei.org
michael.takacs@nrc.gov
cp34update@certrec.com
michael.johnson@nrc.gov
David.Matthews@nrc.gov
Balwant.Singal@nrc.gov
Hossein.Hamzehee@nrc.gov
Stephen.Monarque@nrc.gov
jeff.ciocco@nrc.gov
michael.willingham@nrc.gov
john.kramer@nrc.gov
Brian.Tindell@nrc.gov
Elmo.Collins@nrc.gov
Loren.Plisco@nrc.com
Laura.Goldin@nrc.gov
James.Biggins@nrc.gov
Susan.Vrahoretis@nrc.gov
sfrantz@morganlewis.com
jrund@morganlewis.com
tmatthews@morganlewis.com

Attachment 1

Supplemental Response to Request for Additional Information No. 1889 (CP RAI #11)

SUPPLEMENTAL RESPONSE TO REQUEST FOR ADDITIONAL INFORMATION

Comanche Peak, Units 3 and 4

Luminant Generation Company LLC

Docket Nos. 52-034 and 52-035

RAI NO.: 1889 (CP RAI #11)

SRP SECTION: 02.05.02 - Vibratory Ground Motion

QUESTIONS for Geosciences and Geotechnical Engineering Branch 1 (RGS1)

DATE OF RAI ISSUE: 7/1/2009

QUESTION NO.: 02.05.02-16

The Meers fault is about 270 km from the CPNPP site with an Mmax distribution of 6.85±0.15 (Table 2.5.2-213) and a dominant recurrence interval of 1265 years. Considering these parameters, the staff is unclear why the Meers source's contribution to mean hazard is almost invisible in the 1 to 2.5 Hz deaggregations, and only a small contributor to the 5 to 10 Hz deaggregations of Figures 2.5.2-223 to 227. Please explain the near invisibility of the Meers source in FSAR Figures 2.5.2-223 to 227.

SUPPLEMENTAL INFORMATION:

During preparation of FSAR Subsection 2.5.2, the Gulf Coast ground motion equations were used for the Meers fault, whereas the Mid-Continent equations from EPRI (2004) were more appropriate. The Gulf Coast ground motion equations were also used for EPRI team sources, whereas the Mid-Continent equations were more appropriate. The New Madrid seismic zone hazard calculations have always used the Mid-Continent equations.

The initial response to this question was provided in Luminant letter TXNB-09049 dated September 28, 2009 (ML092740182). The response consisted of

- reviewing seismic source contribution for EPRI teams (several sources were added)
- recalculating rock seismic hazard using the Mid-Continent equations for the Meers fault and EPRI team sources, and using the original Mid-Continent equations for the New Madrid seismic zone
- recalculating site response for the 1E-4, 1E-5, and 1E-6 rock ground motions
- recalculating site-specific hazard (with site response)

This procedure follows Appendix D.4 of RG 1.208. For these site-specific hazard calculations, the Mid-Continent rock ground motion equations were used for the New Madrid seismic zone, with the updated site amplifications and the Cumulative Absolute Velocity (CAV) filter. The soil hazard from New Madrid changed from previous calculations because the site amplifications changed due to soil nonlinearity (they were calculated at different amplitudes) and because of motion amplitude for Peak Ground

Acceleration (PGA). The CAV is a broad-banded measure of ground motion damageability that depends on both spectral acceleration at each frequency and on PGA. Even if the site amplification at 1 Hz does not change at a site, changing the PGA amplification will affect the site hazard at 1 Hz through the CAV filter.

The attached FSAR pages supplement the initial response to this question and the first supplement submitted on December 14, 2009 via Luminant letter TXNB-09084 (ML093561101).

Impact on R-COLA

See attached marked-up FSAR Revision 1 pages

2.5-72	2.5-79	2.5-96	2.5-256	2.5-310	2.5-346
2.5-73	2.5-80	2.5-97	2.5-305	2.5-311	2.5-349
2.5-76	2.5-81	2.5-98	2.5-307	2.5-312	
2.5-77	2.5-82	2.5-99	2.5-308	2.5-313	
2.5-78	2.5-83	2.5-100	2.5-309	2.5-316	

and Figures 2.5.2-204, 2.5.2-206, 2.5.2-207, and 2.5.2-208.

Impact on S-COLA

None.

Impact on DCD

None.

2.5.2.1.3.1 Recent Earthquakes

No significant earthquakes, defined as earthquakes with an impact on the seismic hazard at CPNPP Units 3 and 4 or seismic source characterization of sources relevant to CPNPP Units 3 and 4, have occurred within the site region since the end date of the EPRI-SOG seismicity catalog (i.e., post-1984). For example, the largest post-1984 earthquake within the site region is the September 6, 1997, Emb 4.5 earthquake in south-central Oklahoma, approximately 180 mi from CPNPP Units 3 and 4. However, ~~three~~four earthquakes have occurred outside of the site region with relevance to seismic hazard at CPNPP Units 3 and 4 and seismic source characterizations for CPNPP Units 3 and 4. Two of these earthquakes, the January 2, 1992, Emb 5.0 in southeast New Mexico and the April 14, 1995, Emb 5.8 Alpine earthquake in west Texas (Figure 2.5.2-201), are documented within the updated seismicity catalog (see Subsection 2.5.2.1.2). The ~~third~~other two events, the February 10, 2006, Ms 5.3 and September 10, 2006 earthquakes in the Gulf of Mexico (Reference 2.5-377), ~~is~~are well outside the update region (Figure 2.5.2-205) and ~~is~~are not in the updated catalog. Each of these events is discussed below.

RCOL2_02.05.02-16 S02

RCOL2_02.05.02-16 S02

January 2, 1992, Emb 5.0 Rattlesnake Canyon, New Mexico

The January 2, 1992, Emb 5.0 earthquake near Rattlesnake Canyon, New Mexico (Table 2.5.2-201) was felt over an area of approximately 440,000 km^2 and had a maximum Modified Mercalli Intensity of V (Reference 2.5-378). CPNPP Units 3 and 4 are outside of the felt area as defined by Frohlich and Davis (Reference 2.5-378), and no damage was reported from this earthquake within the felt area (Reference 2.5-378). A focal mechanism of the event determined by Sanford, et al. (Reference 2.5-379) shows that the event was characterized by thrust motion with an east-west compression axis. The event occurred within the central basin platform of the Permian basin, a region of active hydrocarbon exploration. Exploration within the basin produces some seismicity, but it is unknown if this earthquake is of tectonic or man-induced origin (References 2.5-379 and 2.5-380).

April 14, 1995, Emb 5.8 Alpine, Texas

The April 14, 1995, Emb 5.8 earthquake near Alpine, Texas, (Table 2.5.2-201) was felt over an area of approximately 760,000 km^2 and had a maximum intensity of MMI VI (Reference 2.5-378). CPNPP Units 3 and 4 are within the MMI I to III intensity isoseismal region defined by Frohlich and Davis (Reference 2.5-378). Near the epicenter, reported damage includes broken gas mains, cracked walls, and broken windows (Reference 2.5-378). Frolich and Davis (Reference 2.5-378) report that the earthquake was felt in Dallas, Texas, only in high-rise buildings. No known felt reports come from the region immediately surrounding CPNPP Units 3 and 4. A focal mechanism of the event determined by the Global Centroid Moment Tensor Project shows that the event was an earthquake with normal faulting motion with a tensile axis oriented approximately north-northeast (Reference 2.5-317). The event occurred along the eastern boundary of the Rio Grande Rift

(RGR) (Reference 2.5-318), an extensional tectonic province characterized by active seismicity related to normal faulting (see discussion in Subsection 2.5.1.1.4.3.7.1). Research has shown that the RGR influences the upper crustal state of stress well eastward of the topographically defined RGR (see discussion in Subsection 2.5.1.1.4.3.7.1). Partly based on these observations, some researchers believe that this earthquake is related to RGR tectonics. For the CPNPP Units 3 and 4 PSHA, this earthquake is interpreted as related to RGR tectonics.

February 10, 2006, Ms 5.3 Green Canyon, Gulf of Mexico

The February 10, 2006, Ms 5.3 event in the Gulf of Mexico is well outside the update region (Reference 2.5-377) and is not in the updated catalog. The event was felt in coastal Louisiana, Texas, and Florida and had a maximum intensity of MMI III (Reference 2.5-381). The earthquake occurred along the Sigsbee escarpment off Louisiana. Nettles (Reference 2.5-382) has interpreted this event as a gravity-driven landslide based on the lack of high-frequency energy in the waveforms, slow rise time, preliminary focal mechanism determinations, and the location of the event on the Sigsbee escarpment. Preliminary conclusions of Dellinger, et al. (Reference 2.5-383) also support this interpretation, but Dellinger, et al. (Reference 2.5-383) admit that neither a consensus nor conclusive interpretation of the event mechanism has been determined. The implication of the "landslide" interpretation is that large mass sliding events along the Sigsbee escarpment may be detectable on local and regional seismic networks. However, no other earthquakes within the Gulf of Mexico have been attributed to this mechanism, and other independent researchers have not confirmed the landslide mechanism for the February 10 event.

September 10, 2006 Mw 5.8, Gulf of Mexico

RCOL2_02.05.02-16 S02

The September 10, 2006, Mw 5.8 event in the Gulf of Mexico is well outside the update region (Reference 2.5-478) and is not in the updated catalog. However, this event is one of the largest in the Gulf of Mexico and was considered during the investigations for the CPNPP Units 3 and 4 site (see Subsection 2.5.2.4.2.2). The event occurred within the oceanic crust within the eastern Gulf of Mexico. The focal mechanism for the earthquake indicates a reverse sense of motion, and the earthquake depth is reported as 13 to 19 miles (22 to 31 km) (Reference 2.5-478). The Mw 5.8 magnitude for this earthquake is equivalent to Emb 6.1 (see Subsection 2.5.2.1.2 for relationships used in magnitude conversions).

2.5.2.1.3.2 Historical Earthquakes

No additional significant historical earthquakes, defined as earthquakes having an impact on the seismic hazard at CPNPP Units 3 and 4 or seismic source characterization for CPNPP Units 3 and 4, other than those reported in the EPRI-SOG seismicity catalog have been reported since publication of the EPRI-SOG study (References 2.5-369 and 2.5-370). Below is a review of historical earthquakes that are thought to have had significant felt effects within the region

> "The following should be sought … (1) a representation of the legitimate range of technically supportable interpretations among the entire informed technical community…" (page xv, NUREG/CR-6372).

The SSHAC outlines four levels of study for developing the range of interpretations with the choice of level depending on the complexity of the issue to be addressed. The four levels, Level 1 through 4, are distinguished by the increasing levels of sophistication, resources, and participation by technical experts.

For CPNPP Units 3 and 4, the EPRI-SOG source characterizations are used as the base source models for determining the GMRS (Reference 2.5-369). The EPRI-SOG model is chosen based on RG 1.208 that explicitly identifies the source characterizations as an acceptable base model and the availability of detailed documentation describing the EPRI-SOG model (References 2.5-369, 2.5-370, and 2.5-335). However, another supporting reason for using the EPRI-SOG model is that the EPRI-SOG methodology and resultant source characterizations (Reference 2.5-369) are consistent with a high level SSHAC study (Level 3 to 4), and the final aggregate source characterizations were developed to:

> "… reflect the range of current thinking on the causes of earthquakes in the eastern United States" (report summary page 1, Reference 2.5-369).

As required by RG 1.208, site and regional data collected for CPNPP Units 3 and 4 presented in Subsection 2.5.1 and Subsection 2.5.2.1 have been reviewed to:

> "…determine whether there are any new data or interpretations that are not adequately incorporated into the existing PSHA databases" (page 11, RG 1.208).

As required by the regulatory guidance, if significant new data or interpretations are found they require update of the EPRI-SOG source characterizations. Particular attention was paid to this review of new data collected for CPNPP Units 3 and 4 because of the time elapsed since development of the EPRI-SOG source characterizations. The source characterizations of the Dames & Moore (zone 20) and Law Engineering (zone 124) ESTs were subject to additional scrutiny because their respective source models generated the highest and lowest hazard estimates for CPNPP Units 3 and 4, respectively. From this review, it has been determined no new data exist requiring alteration of the EPRI-SOG source characterizations for CPNPP Units 3 and 4 with the exception of those updates presented in Subsection 2.5.2.4.2. The only significant update is that for the Meers fault, and, as described in Subsection 2.5.2.4.2.3.2, this update is developed following SSHAC guidelines.

The following subsections present the seismic source characterizations from the EPRI-SOG model (Reference 2.5-369) that are ~~either~~ within the site region. ~~or were determined to contribute to hazard at CPNPP Units 1 and 2.~~ Following those RCOL2_02.05.02-16 S02

descriptions, a summary of seismic sources used in more recent seismic hazard studies relevant to CPNPP Units 3 and 4 are presented. Source characterizations developed since the EPRI-SOG study commonly use moment magnitude (Mw) to describe earthquake magnitude whereas the EPRI-SOG study used body-wave magnitude (m_b). To allow comparisons between these magnitudes, both m_b and Mw magnitudes are reported below. To convert between the two magnitude scales, the arithmetic mean of the magnitude conversions reported in Atkinson and Boore (Reference 2.5-386), Frankel, et al. (Reference 2.5-339), and EPRI (Reference 2.5-387) are used.

2.5.2.2.1 Summary of EPRI-SOG Source Model

The EPRI-SOG study completed during the 1980s (References 2.5-369, 2.5-370, and 2.5-335) captured uncertainty in seismic source characterizations for the CEUS through the elicitation of six independent ESTs to develop source models of the CEUS. The six teams (Bechtel Group, Dames & Moore, Law Engineering, Rondout Associates, Weston Geophysical Corporation, and Woodward-Clyde Consultants) independently evaluated the same database of geologic, geophysical, and seismological observations to develop seismic sources for the CEUS. The teams began by developing criteria for assessing the seismogenic activity of a tectonic feature (e.g., spatial association with large- or small-magnitude earthquakes, evidence of geologically recent slip, orientation relative to the regional stress regime). The ESTs then used the common database to identify potentially seismogenic tectonic features and used their individual criteria to determine the probability of seismogenic activity for these features. Each EST then defined seismic sources from the tectonic features and characterized the sources using the EPRI-SOG PSHA methodology (References 2.5-369 and 2.5-335) within which each source is characterized by the following: probability of activity, maximum earthquake magnitude (Mmax) distribution, alternative source geometries, source interdependencies, and smoothing parameters for use in determining seismicity recurrence parameters.

Each EST team provided detailed documentation of their seismic hazard assessments and source characterizations in separate volumes of the EPRI-SOG study (Reference 2.5-369). However, for implementing the EST source zones into the EPRI-SOG PSHA model, some simplifications were made to the original source characterizations, as documented in the EQHAZARD Primer (Reference 2.5-335). These simplifications primarily reduced unneeded complexity in Mmax distributions. The EQHAZARD Primer (Reference 2.5-335) is the primary source of zone characterizations presented below.

Table 2.5.2-202 through Table 2.5.2-207 summarize the source zone characterizations for sources within 200 mi of CPNPP Units 3 and 4. ~~The list of contributing seismic sources in Tables 2.5.2-202 through 2.5.2-207 is taken from the original EPRI PSHA study, and confirmed with updated calculations that used the EPRI (2004) ground motion equations (Reference 2.5-401). A subset of these sources was determined to contribute to hazard at CPNPP Units 1 and 2 through a screening process that excludes all sources that contribute less than 1% of the~~ RCOL2_02.05.02-16 S02

~~hazard at a particular site (Reference 2.5-327).~~ The~~se~~ contributing sources ~~are indicated in Table 2.5.2-202 through Table 2.5.2-207 and~~ are shown in Figure 2.5.2-203 through Figure 2.5.2-208. These source zones are the starting point for the PSHA at CPNPP Units 3 and 4. Also shown in Figure 2.5.2-203 through Figure 2.5.2-208 are earthquakes from the combined catalog for CPNPP Units 3 and 4 (see Subsection 2.5.2.1) for earthquakes with Emb > 3.0. RCOL2_02.05.02-16 S02

In Subsection 2.5.2.2.1.1 through Subsection 2.5.2.2.1.6, the contributing source zones for each EST are briefly discussed. More detailed information on each source zone is provided in the EST volumes of the EPRI-SOG documentation (Reference 2.5-369).

2.5.2.2.1.1 Sources identified by Bechtel Group

Five source zones from ~~T~~the Bechtel Group EST ~~defined five source zones that~~ contribute~~d~~ to hazard at CPNPP Units ~~1~~3 and ~~2~~4 (Table 2.5.2-202) (Figure 2.5.2-203) (References 2.5-369, 2.5-370, and 2.5-335): Texas Platform (zone BZ2), Ouachita (zone 38), Oklahoma Aulacogen (zone 39), North Great Plains (zone BZ3), and Combination (zone C04). Bechtel defined four additional zones that extended to within the site region that ~~did~~do not contribute to hazard ~~at CPNPP Units 1 and 2~~ (Table 2.5.2-202) (References 2.5-369, 2.5-370, and 2.5-335): Meers Fault (zone 40), El Reno (zone 65), Gulf Coast (zone BZ1), and S.E. Oklahoma (zone 55). Following is a brief discussion of the seismic source zones that contribute~~d~~ to hazard ~~at CPNPP Units 1 and 2 and are used in the PSHA for CPNPP Units 3 and 4~~: RCOL2_02.05.02-16 S02 RCOL2_02.05.02-16 S02 RCOL2_02.05.02-16 S02

Texas Platform (zone BZ2)

The Texas Platform source zone is a large background source zone extending from eastern New Mexico into Texas (Figure 2.5.2-203). The zone is characterized by an upper-bound Mmax of m_b 6.6 (Table 2.5.2-202). CPNPP Units 3 and 4 are contained within the zone.

Ouachita (zone 38)

The Ouachita source zone extends from Arkansas into east Texas (Figure 2.5.2-203) and was defined to encompass the extent of the Ouachita fold belt within this region. The zone is characterized by an upper-bound Mmax of m_b 6.6 (Table 2.5.2-202). The closest approach of the zone to CPNPP Units 3 and 4 is 125 mi.

Oklahoma Aulacogen (zone 39)

The Oklahoma Aulacogen source zone was drawn to encompass the Oklahoma Aulacogen in Texas, Oklahoma, and New Mexico (Figure 2.5.2-203). The zone is characterized by an upper-bound Mmax of m_b 6.6 (Table 2.5.2-202). The closest approach of the zone to CPNPP Units 3 and 4 is 89 mi.

North Great Plains (zone BZ3)

The North Great Plains source zone is a large background zone extending over much of the central U.S. and into southern Canada (Figure 2.5.2-203). The zone is characterized by an upper-bound Mmax of m_b 6.6 (Table 2.5.2-202). The closest approach of the zone to CPNPP Units 3 and 4 is 89 mi.

Combination (zone C04)

Combination (zone C04) is comprised of the Oklahoma Aulacogen (zone 39) and Ouachita (zone 38) source zones. The zone is characterized by an upper-bound Mmax of m_b 6.6 (Table 2.5.2-202). The closest approach of the zone to CPNPP Units 3 and 4 is 89 mi.

2.5.2.2.1.2 Sources identified by Dames & Moore

Seven source zones from ~~T~~the Dames & Moore Group EST ~~defined six source zones that~~ contribute~~d~~ to hazard at CPNPP Units ~~1~~3 and ~~2~~4 (Table 2.5.2-203) (Figure 2.5.2-204) (References 2.5-369, 2.5-370, and 2.5-335): Southern Coastal Margin (zone 20), Ouachitas Fold Belt (zone 25), Kink in Ouachita Fold Belt (zone 25a), Southern Oklahoma Aulacogen (zone 28), Default for Southern Oklahoma (zone 28b), ~~and~~ New Mexico (zone 67) and Combinzation (zone C08). Dames & Moore defined ~~one~~four additional zones that extend~~s~~ to within the site region that ~~did~~do not contribute to hazard ~~at CPNPP Units 1 and 2~~ (Table 2.5.2-203) (References 2.5-369, 2.5-370, and 2.5-335): B-W-M Fault (zone 29), A/W Uplift (zone 30), Ardmore Basin (zone 32) and Anadarko Basin (zone 33). Following is a brief discussion of the seismic source zones that contributed to hazard at CPNPP Units 1 and 2 and are used in the PSHA for CPNPP Units 3 and 4:

RCOL2_02.05.02-16 S02

RCOL2_02.05.02-16 S02

Southern Coastal Margin (zone 20)

The South Coastal Margin source zone is a large regional zone that extends from the continental shelf off eastern Florida, along the Texas coastal plain, and into Mexico (Figure 2.5.2-204). Dames & Moore designed the zone to largely parallel the southern-rifted margin of North America, and they state that they have no tectonic basis with which to define the seismic potential of the zone. The zone is characterized by an upper-bound Mmax of m_b 7.2 (Table 2.5.2-203). The closest approach of the zone to CPNPP Units 3 and 4 is 83 mi.

Ouachitas Fold Belt (zone 25)

The Ouachitas Fold Belt source zone encompasses the Ouachita orogenic front extending from Arkansas through Oklahoma, Texas, and into eastern Mexico (Figure 2.5.2-204). The zone is characterized by an upper-bound Mmax of m_b 7.2 (Table 2.5.2-203). The closest approach of the zone to CPNPP Units 3 and 4 is 26 mi.

Kink in Ouachita Fold Belt (zone 25a)

The Kink in Ouachita Fold Belt source zone is an alternative interpretation of the Ouachitas Fold Belt (zone) representing the opinion of the Dames & Moore EST that seismicity within the fold belt may be preferentially associated with a kink in the fold belt located at the Texas-Oklahoma border (Figure 2.5.2-204). The zone is characterized by an upper-bound Mmax of m_b 7.2 (Table 2.5.2-203). The closest approach of the zone to CPNPP Units 3 and 4 is 75 mi.

Southern Oklahoma Aulacogen (zone 28)

The Southern Oklahoma Aulacogen source zone extends along the Texas-Oklahoma border into the Texas panhandle (Figure 2.5.2-204). The source was defined to encompass the Southern Oklahoma Aulacogen. The zone is characterized by an upper-bound Mmax of m_b 7.2 (Table 2.5.2-203). The closest approach of the zone to CPNPP Units 3 and 4 is 91 mi.

Default for Southern Oklahoma (zone 28b)

The Default for Southern Oklahoma Aulacogen source zone extends along the Texas-Oklahoma border into the Texas panhandle (Figure 2.5.2-204). The source is a default source zone used to represent the seismic activity of the Southern Oklahoma Aulacogen in conjunction with the Southern Oklahoma Aulacogen (zone 28) source zone. The zone is characterized by an upper-bound Mmax of m_b 7.2 (Table 2.5.2-203). The closest approach of the zone to CPNPP Units 3 and 4 is 70 mi.

New Mexico (zone 67)

The New Mexico source zone extends from Texas into New Mexico and part of northern Mexico (Figure 2.5.2-204). Dames & Moore describe the boundaries of the zone as being defined largely on the basis of the extent of arches and basins formed during the Paleozoic (Reference 2.5-369). The zone is characterized by an upper-bound Mmax of m_b 7.2 (Table 2.5.2-203). CPNPP Units 3 and 4 are located within this source zone.

2.5.2.2.1.3 Sources identified by Law Engineering

Two source zones from ~~T~~the Law Engineering EST ~~defined two source zones that~~ contribute~~d~~ to hazard at CPNPP Units ~~1~~3 and ~~2~~4 (Table 2.5.2-204) (Figure 2.5.2-205) (References 2.5-369, 2.5-370, and 2.5-335): New Mexico-Texas Block (zone 124) and Oklahoma Aulacogen-Arbuckle Wichita Rift (zone 26). Law Engineering defined ~~two~~three additional zones that extend to within the site region that ~~did~~do not contribute to hazard~~ at CPNPP Units 1 and 2~~ (Table 2.5.2-204) (References 2.5-369, 2.5-370, and 2.5-335): Eastern Mid-Continent (zone 119), Western Mid-Continent (zone 120) and South Coastal Block (zone 126). Following is a brief

RCOL2_02.05.02-16 S02

RCOL2_02.05.02-16 S02

discussion of the seismic source zones that contributed to hazard at CPNPP Units 1 and 2 and are used in the PSHA for CPNPP Units 3 and 4.: RCOL2_02.05.02-16 S02

New Mexico-Texas Block (zone 124)

The New Mexico-Texas Block source zone is a large areal source defined by the boundaries of the Southern Oklahoma Aulacogen, the Ouachita gravity high, and the magnetic trend of the Rio Grande Rift-Colorado Front Ranges (Reference 2.5-369). This zone encompasses the majority of Texas, excluding the Gulf Costal Plain, and extends into eastern New Mexico (Figure 2.5.2-205). The zone is characterized by an upper-bound Mmax of m_b 5.8 (Table 2.5.2-204). CPNPP Units 3 and 4 are located within this source zone.

Oklahoma Aulacogen-Arbuckle Wichita Rift (zone 26)

The Oklahoma Aulacogen-Arbuckle Wichita Rift source zone overlaps the Texas-Oklahoma border and extends into the Texas panhandle and New Mexico (Figure 2.5.2-205). The source zone geometry was defined to encompass the extent of the Southern Oklahoma Aulacogen. The zone is characterized by an upper-bound Mmax of m_b 6.8 (Table 2.5.2-204). The closest approach of the zone to CPNPP Units 3 and 4 is 93 mi.

2.5.2.2.1.4 Sources identified by Rondout Associates

Four source zones from Tthe Rondout Associates EST defined two source zones that contributed to hazard at CPNPP Units 13 and 24 (Table 2.5.2-205) (Figure 2.5.2-206) (References 2.5-369, 2.5-370, and 2.5-335): Southern Oklahoma Aulacogen-Ouachita Mountains (zone 16), Nemaha-Anadark (zone 23), Gulf Coast to Bahamas Fracture Zone (zone 51) and Grenville Crust (zone C02). Rondout Associates defined twoone additional zones that extends to within the site region that diddoes not contribute to hazard at CPNPP Units 1 and 2 (Table 2.5.2-205) (References 2.5-369, 2.5-370, and 2.5-335): Nemaha-Anadark (zone 23) and Gulf Coast to Bahamas Fracture (zone 51)Pre-Grenville Precambrian Craton (zone 52). Following is a brief discussion of the seismic source zones that contributed to hazard at CPNPP Units 1 and 2 and are used in the PSHA for CPNPP Units 3 and 4.: RCOL2_02.05.02-16 S02 RCOL2_02.05.02-16 S02

Southern Oklahoma Aulacogen-Ouachita Mountains (zone 16)

The Southern Oklahoma Aulacogen-Ouachita Mountains source zone extends from Arkansas into Texas and Oklahoma along the Texas-Oklahoma border (Figure 2.5.2-206). The zone geometry was defined to encompass the Oklahoma Aulacogen (Reference 2.5-369). The zone is characterized by an upper-bound Mmax of m_b 6.8 (Table 2.5.2-205). The closest approach of the zone to CPNPP Units 3 and 4 is 80 mi.

Grenville Crust (zone C02)

The Grenville Crust source zone is a set of discrete source zones that extend across the eastern and southern margin of the U.S. (Figure 2.5.2-206). The closest portion of the source zone to CPNPP Units 3 and 4 encompasses central and eastern Texas. The source zone is a background source representing all of the Grenville age crust that is not contained within a source zone based on the presence of tectonic features (Reference 2.5-369). The zone is characterized by an upper-bound Mmax of m_b 5.8 (Table 2.5.2-205). CPNPP Units 3 and 4 are located within this source zone.

2.5.2.2.1.5 Sources identified by Weston Geophysical Corporation

Four source zones from ~~T~~the Weston Geophysical Corporation EST ~~defined three source zones that~~ contribute~~d~~ to hazard at CPNPP Units ~~1~~3 and ~~2~~4 (Table 2.5.2-20~~6~~7) (Figure 2.5.2-20~~7~~8) (References 2.5-369, 2.5-370, and 2.5-335): Southwest (zone 109), Combination (zone C31), ~~and~~ Ancestral Rockies (zone 36) and Gulf Coast (zone 107). Weston Geophysical Corporation defined one additional zone that extends to within the site region that ~~did~~does not contribute to hazard ~~at CPNPP Units 1 and 2~~ (References 2.5-369, 2.5-370, and 2.5-335): ~~Gulf Coast (zone 107)~~Delaware Basin (zone 37). Following is a brief discussion of the seismic source zones that contributed to hazard ~~at CPNPP Units 1 and 2 and are used in the PSHA for CPNPP Units 3 and 4~~: RCOL2_02.05.02-16 S02

Southwest (zone 109)

The Southwest source zone is a large background source that extends over much of Texas, New Mexico, Colorado, and Wyoming (Figure 2.5.2-207). The zone is characterized by an upper-bound Mmax of m_b 6.6 (Table 2.5.2-206). CPNPP Units 3 and 4 are located within this zone.

Combination (zone C31)

The Combination (zone C31) source zone is an alternative geometry for the Southwest (zone 109) background zone that excludes the Delaware Basin in west Texas (Figure 2.5.2-207). The zone is characterized by an upper-bound Mmax of m_b 6.6 (Table 2.5.2-20~~5~~6). CPNPP Units 3 and 4 are located within this zone. RCOL2_02.05.02-16 S02

Ancestral Rockies (zone 36)

The Ancestral Rockies source zone extends from Arkansas, through the majority of Oklahoma, and into the Texas panhandle (Figure 2.5.2-207). The geometry of this zone was defined to encompass the extent of the Southern Oklahoma Aulacogen and associated tectonic features. The zone is characterized by an upper-bound Mmax of m_b 6.0 (Table 2.5.2-20~~5~~6). The closest extent of this zone to CPNPP Units 3 and 4 is ~~85~~79 mi. RCOL2_02.05.02-16 S02

2.5.2.2.1.6 Sources identified by Woodward-Clyde Consultants

Four source zones from ~~T~~the Woodward-Clyde Consultants EST ~~defined three source zones that~~ contributed to hazard at CPNPP Units ~~1~~3 and ~~2~~4 (Table 2.5.2-207) (Figure 2.5.2-208) (References 2.5-369, 2.5-370, and 2.5-335): Central U.S. Background (zone BG44), Southern Oklahoma Aulacogen (zone 46), ~~and~~ Alternate Configuration of Southern Oklahoma Aulacogen (46a) and Southern Oklahoma Gravity Anomaly (zone 48). Woodward-Clyde Consultants defined ~~three~~two additional zones that extend to within the site region that ~~did~~do not contribute to hazard at CPNPP Units 1 and 2 (Table 2.5.2-207) (References 2.5-369, 2.5-370, and 2.5-335): Meers Fault (zone 49)~~,~~ and Eastern Oklahoma Seismic Zone (zone 52)~~, and Southern Oklahoma Gravity Anomaly (zone 48)~~. Following is a brief discussion of the seismic source zones that contribute~~d~~ to hazard: ~~at CPNPP Units 1 and 2 and are used in the PSHA for CPNPP Units 3 and 4:~~

RCOL2_02.05.02-16 S02

RCOL2_02.05.02-16 S02

RCOL2_02.05.02-16 S02

Central US Background (zone BG44)

The Central US Background (zone BG44) is a large areal background source centered on CPNPP Units 1 and 2. The zone is a quadrilateral shape with sides approximately 6° long, in both longitude and latitude (Figure 2.5.2-208). The zone is characterized by an upper-bound Mmax of m_b 6.5 (Table 2.5.2-207). CPNPP Units 3 and 4 are in this zone.

Southern Oklahoma Aulacogen (zone 46)

The Southern Oklahoma Aulacogen source zone extends from south-central Oklahoma along the Oklahoma-Texas border into the Texas panhandle (Figure 2.5.2-208). The zone geometry is defined to encompass the extent of the Southern Oklahoma Aulacogen. The zone is characterized by an upper-bound Mmax of m_b 7.2 (Table 2.5.2-207). The closest approach of the zone to CPNPP Units 3 and 4 is 100 mi.

Alternate Configuration for Southern Oklahoma Aulacogen (zone 46A)

The Alternate Configuration for Southern Oklahoma Aulacogen source zone is an alternative geometry for the Southern Oklahoma Aulacogen (zone 46) source zone that extends further to the northeast into New Mexico. The zone is characterized by an upper-bound Mmax of m_b 7.2 (Table 2.5.2-207). The closest approach of the zone to CPNPP Units 3 and 4 is 100 mi.

2.5.2.2.2 Post-EPRI-SOG Source Characterization Studies

Since publication of the EPRI-SOG seismic source characterizations for the CEUS in 1986 (Reference 2.5-369), there have been several regional-scale source characterization studies within the CPNPP Units 3 and 4 site region. These studies include:

For both test areas, the truncated exponential recurrence model is fit to historical seismicity data using the EPRI EQPARAM program, which uses the maximum likelihood technique. Earthquake recurrence parameters are computed first using the original EPRI catalog and periods of completeness, and then using the updated catalog and extending the periods of completeness to 2006, assuming that the probability of detection for all magnitudes is unity for the time period 1985 to 2006. The resulting earthquake recurrence rates are compared in Figure 2.5.2-210 for Test Area 1 and in Figure 2.5.2-211 for Test Area 2. Both figures show that the extended earthquake catalog results in earthquake recurrence rates that are lower than rates from the original earthquake catalog.

On the basis of the comparison shown in Figures 2.5.2-210 and 2.5.2-211, it is concluded that the earthquake occurrence rate parameters developed in the EPRI-SOG study for seismic sources are conservative estimates of what would be calculated if the extended catalog were to be used to recalculate earthquake occurrence rates. As a result of this conclusion, the original EPRI-SOG earthquake rate parameters are used for EPRI-SOG seismic sources to make hazard estimates for the CPNPP Units 3 and 4 site. Treatment of earthquake rate parameters for other seismic sources, specifically the New Madrid seismic source, is addressed in Subsection 2.5.2.4.4 below.

2.5.2.4.2.2 New Maximum Magnitude Information

Geologic and seismological data published since the EPRI-SOG study for the site region and more distal areas are summarized and discussed in Subsection 2.5.1 and Subsection 2.5.2.1.2. A review of these data has shown that there is no basis for updating the Mmax distributions of the EPRI-SOG source zones used for the PSHA at CPNPP Units 3 and 4 (Table 2.5.2-202 through 2.5.2-207), with the exception of Dames & Moore's South Coastal Margin (zone 20) and Law Engineering's New Mexico-Texas Block (zone 124). The basis for these updates is that earthquakes have occurred since the EPRI-SOG study (see discussion in Subsection 2.5.2.1 and Subsection 2.5.2.3) within these source zones that have magnitudes greater than the lower-bound Mmax magnitudes for these zones. The update to the Mmax values for these source zones consists of raising the lower-bound Mmax value for the two zones and is discussed in ~~Subsection 2.5.2.4.2.2.1 and Subsection 2.5.2.4.2.2.2~~the following subsections. RCOL2_02.05.02-16 S02

In addition to these two earthquakes, another earthquake, the April 14, 1995, event, occurred within several source zones with lower-bound Mmax values less than the magnitude of the earthquake. This occurrence could be interpreted as justification for updating the Mmax of these EPRI-SOG source zones. However, accounting for the seismotectonic environment and seismic hazard potential reflected by this earthquake is best done through the addition of a new source zone for CPNPP Units 3 and 4. This event, the potentially affected source zones, and development of the new source zone are described in Subsection 2.5.1.1.4.3.7.1 and Subsection 2.5.2.4.2.3.3.

2.5.2.4.2.2.1 Mmax Update for Dames & Moore South Coastal Margin

The Dames & Moore South Coastal Margin (zone 20) is characterized by a Mmax distribution of m_b 5.3 (0.8) and m_b 7.2 (0.2), with weights shown in parentheses (Table 2.5.2-210). On February 10, 2006, an earthquake of magnitude Ms 5.3 (References 2.5-377 and 2.5-381) occurred within this source zone (Figure 2.5.1-204). The earthquake occurred within a region of the Gulf of Mexico with relatively poor seismograph station coverage. However, at the time of the event an ocean-bottom seismometer array was deployed near the earthquake allowing for a relatively good determination of the earthquake epicenter. The earthquake occurred well outside the extent of the updated catalog, so an Emb magnitude for the event is not listed in Table 2.5.2-201, but an Emb magnitude of 5.5 is calculated for the event using the relationship between Ms and Emb reported in Table 4-1 of EPRI (Reference 2.5-340) as described in Subsection 2.5.2.1.2. Since the Emb 5.5 magnitude is greater than the lower-bound m_b 5.3 magnitude of the zone, the Mmax distribution for the zone needs to be updated.

The methodology used by Dames & Moore in determining the Mmax distribution for the South Coastal Margin source zone is not explicitly stated in the EPRI-SOG documentation (References 2.5-369 and 2.5-335). Given the lack of a documented methodology, an updated Mmax distribution is developed by increasing the lower-bound Mmax of the South Coastal Margin source zone to m_b 5.5 while maintaining the original weights. The updated Mmax distribution is presented in Table 2.5.2-210.

2.5.2.4.2.2.2 Mmax Update for Law Engineering New Mexico-Texas Block

The Law Engineering New Mexico-Texas Block (zone 124) is characterized by a Mmax distribution of m_b 4.9 (0.3), 5.5 (0.5), and 5.8 (0.2) with weights shown in parentheses (Table 2.5.2-21~~1~~0). On January 2, 1992, an earthquake with an Emb magnitude of 5.0 occurred in the southeast corner of New Mexico. This event is located well within the boundaries of the Law Engineering New Mexico-Texas Block (zone 124) (Figure 2.5.2-201 and Figure 2.5.2-205). Because the Emb magnitude of this event is greater than the lower-bound Mmax for this zone, the Mmax distribution needs to be revised. RCOL2_02.05.02-16 S02

The Law Engineering methodology for developing the New Mexico-Texas Block Mmax distribution is not explicitly stated within the EPRI-SOG study documentation (References 2.5-369 and 2.5-335). However, the 1986 volume for Law Engineering (Reference 2.5-369) does indicate that the 5.8 upper-bound Mmax is based on observations of seismicity within the zone, and that the lower-bound 4.9 is the maximum observed earthquake magnitude within the zone (EPRI, 1986). Based on these statements, the Mmax distribution is updated by increasing the lower-bound Mmax value to 5.0 and maintaining the remaining Mmax values and original weights. A summary of the updated New Mexico-Texas Block is shown in Table 2.5.2-21~~1~~0. RCOL2_02.05.02-16 S02

Law Engineering assigned Mmax values of 4.6 and 4.9 to the South Coastal Block Source Zone (Zone 126) (Table 2.5.2-210). The 2006 Emb 5.5 and Emb 6.1 earthquakes within the Gulf of Mexico (see Subsection 2.5.2.1.3.1) are 39 mi (63 km) and 97.6 mi (157 km) outside this zone, respectively. The Emb 6.1 earthquake was well recorded and clearly lies outside the source zone (Reference 2.5-478). The Emb 5.5 earthquake was not well recorded and attempts at relocating the event using proprietary data from ocean bottom seismographs have resulted in significant (10s of kilometers) variation in the position of the earthquake epicenter (Reference 2.5-479). Although current published locations of the Emb 5.5 earthquake locate it outside the source zone boundaries, the uncertainty in the epicentral location of the earthquake is such that it could have occurred within the source zone. The earthquake is conservatively assumed to have occurred within the South Coastal Block Zone. Because the Emb 5.5 earthquake is larger than the lower bound Mmax value of the South Coastal Block Source Zone, the Mmax distribution has been revised accordingly. RCOL2_02.05.02-16 S02

The updated Mmax values of 5.5 and 5.7 adopted here (Table 2.5.2-210) are derived using Law Engineering's methodology for developing Mmax distributions as follows (Reference 2.5-369):

- The lower bound Mmax is the magnitude of the maximum observed earthquake in the zone
- The upper bound Mmax magnitude defined by Law Engineering for regions with earthquakes occurring within 6.2 mi (10 km) of the surface is mb 5.7

Weights for the original Mmax distribution (0.9 on the lower bound Mmax and 0.1 on the upper bound Mmax) are retained in the updated Mmax distribution (Table 2.5.2-210).

2.5.2.4.2.2.3 Mmax Update for Bechtel Gulf Coast

The Bechtel Group assigned Mmax values of 5.4, 5.7, 6.0, and 6.6 to the Gulf Coast source zone (zone BZ1) (Table 2.5.2-210). Because the 2006 Emb 5.5 and Emb 6.1 earthquakes in the Gulf of Mexico occur well within this zone (Figure 2.5.2-204), and because these magnitudes are greater than the lower-bound Mmax values for the source zone, the Mmax distribution for this source zone has been updated.

The updated Mmax values of 6.1, 6.4, and 6.6 with weightings of 0.1, 0.4, and 0.5 used here (Table 2.5.2-210) follow from Bechtel's methodology of defining Mmax distributions (Reference 2.5-369):

- The lower bound magnitude of the distribution is defined as the greater of either the largest observed earthquake magnitude within the zone, or mb 5.4.

RCOL2_02.05.02-16 S02

- The next higher magnitude is 0.3 magnitude units greater than the minimum.
- The third magnitude is 0.6 magnitude units above the minimum.
- The fourth magnitude, and upper bound of the distribution, is mb 6.6.
- The weightings on the four Mmax values are 0.1, 0.4, 0.4, and 0.1, assigned consecutively from the minimum Mmax value.

If these guidelines result in an upper bound magnitude or magnitudes greater than mb 6.6, then the upper Mmax distribution is truncated at mb 6.6, and all weightings for magnitudes greater than or equal to 6.6 are summed and collapsed onto the magnitude 6.6 upper bound.

2.5.2.4.2.2.4 Mmax Update for Rondout Gulf Coast to Bahamas Fracture Zone

Rondout Associates assigned Mmax values of 4.8, 5.5, and 5.8 to the Gulf Coast to Bahamas Fracture Zone source zone (zone 51) (Table 2.5.2-210). Because both the 2006 Emb 5.5 and Emb 6.1 earthquakes in the Gulf of Mexico occur within this zone, and because these magnitudes are greater than the lowest Mmax values for the source zone, the Mmax distribution for this source zone has been updated.

The updated Mmax values of 6.1, 6.3, and 6.5 with weightings of 0.3, 0.55, and 0.15, respectively, used here (Table 2.5.2-210) follow from reclassifying the source zone as one capable of producing moderate earthquakes instead of the original classification of the source zone as one only capable of producing smaller than moderate earthquakes (Reference 2.5.2-369). The original Rondout Mmax distribution for moderate earthquake source zones is 5.2, 6.3, and 6.5 with weightings of 0.3, 0.55, and 0.15, respectively. The updated Mmax distribution follows this distribution with the exception of an increase in the lower bound of the distribution to 6.1 to account for the observed Emb 6.1 earthquake within this zone.

2.5.2.4.2.2.5 Mmax Update for Weston Gulf Coast

Weston Geophysical Corporation assigned Mmax values of 5.4 and 6.0 to the Gulf Coast source zone (zone 107) (Table 2.5.2-210). Both the 2006 Emb 5.5 and Emb 6.1 earthquakes in the Gulf of Mexico occur within this zone. Because these magnitudes are greater than the original Mmax values for the source zone, the Mmax distribution for this source zone has been revised.

Weston Geophysical Corporation's (Reference 2.5.2-369) methodology for defining Mmax is based on developing discrete distributions for the probability of Mmax being a particular value. For the Gulf Coast source zone, these Mmax values and probabilities determined by the Weston Geophysical Corporation EST

are: 3.6 (0.04628), 4.2 (0.11982), 4.8 (0.27542), 5.4 (0.34415), 6.0 (0.16169), 6.6 (0.04461), and 7.2 (0.00553) (Reference 2.5.2-369). Conservatively applying the Weston Geophysical Corporation's methodology, this discrete probability distribution is truncated at the magnitude that is closest to, yet greater than, the maximum observed earthquake within the source zone. For this study the distribution is truncated at 6.6 because the Emb 6.1 earthquake occurred within the source zone, and the next highest discrete magnitude in the distribution is 6.6. The truncated distribution is then renormalized so that the sum of all the probabilities is 1.0. The final Mmax values are the truncated distribution, and the weights are the renormalized probabilities. RCOL2_02.05.02-16 S02

2.5.2.4.2.3 New Seismic Source Characterizations

Geologic, geophysical, and seismological information developed since the EPRI-SOG study (Reference 2.5-369) was reviewed to identify seismic sources not included in the original EPRI-SOG screening study for CPNPP Units 1 and 2 that should be evaluated to determine their potential contribution to seismic hazard at CPNPP Units 3 and 4. New seismic source characterizations are developed for four tectonic features thought to have the potential to impact seismic hazard at CPNPP Units 3 and 4. These features are the New Madrid Seismic Zone (NMSZ), the Meers fault, the Rio Grande Rift (RGR), and the Cheraw fault (Figure 2.5.2-212). The development of seismic source characterizations for these features is described in Subsection 2.5.2.4.2.3.1 through Subsection 2.5.2.4.2.3.4 based on the post-EPRI-SOG information summarized in Subsection 2.5.1.1.4.3.6. Source characterizations developed since the EPRI-SOG study commonly use moment magnitude (Mw) to describe earthquake magnitude, whereas the EPRI-SOG study used body-wave magnitude (m_b). To allow comparisons between these magnitudes, both m_b and Mw magnitudes are reported below. To convert between the two magnitude scales, the arithmetic mean of the magnitude conversions reported in Atkinson and Boore (Reference 2.5-386), Frankel, et al. (Reference 2.5-339), and EPRI (Reference 2.5-387) are used.

2.5.2.4.2.3.1 New Madrid Seismic Zone

The NMSZ extends from southeastern Missouri to southwestern Tennessee and is located approximately 500 mi northeast of CPNPP Units 3 and 4 (Figure 2.5.2-212). The NMSZ produced a series of large-magnitude earthquakes between December 1811 and February 1812 (Reference 2.5-328). Subsection 2.5.1.1.4.3.7.3 presents a detailed discussion of the NMSZ. In brief, several post-EPRI-SOG studies demonstrate that the source parameters for geometry, Mmax, and recurrence of Mmax in the New Madrid region need to be updated to capture the current understanding of this seismic source (References 2.5-321, 2.5-328, 2.5-329, 2.5-330, 2.5-336, and 2.5-393).

The original EPRI-SOG screening study for CPNPP Units 1 and 2 did not show any New Madrid source zones from the EPRI-SOG ESTs as contributing to 99% of the hazard (Reference 2.5-370). However, with the updated geometry, Mmax

2.5-474 Westaway, R. (2007) "Late Cenozoic uplift of the eastern United States revealed by fluvial sequences of the Susquehanna and Ohio systems: coupling between surface processes and lower-crustal flow". Quaternary Science Reviews, v.26, p.2823-2843.

2.5-475 Zachos, J. C., Quinn, T. M., Salamy, K. A. (1996) "High resolution (104 years) deep-sea foraminiferal stable isotope records of the Eocene-Oligocene climate transition". Paleoceanography, v.11, no.3, p.251-266.

2.5-476 Davis, D.M., Pennington, W., and Carlson, S., 1985, Historical seismicity of the state of Texas: a summary: Gulf Coast Association of Geological Societies Transactions, v. 35, p. 39-44.

2.5-477 Luza, K.V., and Lawson, J.E., 1993, Oklahoma Seismic Network: Washington, D.C., US Nuclear Regulatory Commission, NUREG/CR-6034, p. 33.

2.5-478 USGS, 2006, M5.8 Gulf of Mexico earthquake of 10 September 2006, U.S. Geological survey, Earthquake Summary MAP, p. 1: 4,500,000. Map released 9/18/2006.

2.5-479 Dewey, J.A., and J.A. Dellinger (2008). Location of Green Canyon (Offshore Souther Lousiana) Seismic Event of February 10, 2006, US Geological Survey Open-File Rept. 2008-1184.

RCOL2_02.05.02-16 S02

CP COL 2.5(1)

Table 2.5.2-202 (Sheet 1 of 2)
Summary of Bechtel Group Seismic Source Zones

Source	Description	Distance[a] (km)	Distance[a] (mi)	Pa[b]	M_{max} (m_b) and Wts.[c]	Smoothing Options and Wts.[d]	Contributes to 99% of Hazard[e]
39	Oklahoma Aulacogen	143	89	0.20	5.4 [0.1] 5.7 [0.4] 6.0 [0.4] 6.6 [0.1]	1 [0.33] 2 [0.34] 3 [0.33]	Yes
BZ2	Texas Platform	0	0	1.0	5.4 [0.1] 5.7 [0.4] 6.0 [0.4] 6.6 [0.1]	1 [0.33] 2 [0.34] 3 [0.33]	Yes
38	Ouachita	205	125	0.25	5.4 [0.1] 5.7 [0.4] 6.0 [0.4] 6.6 [0.1]	1 [0.33] 2 [0.34] 4 [0.33]	Yes
BZ3	North Great Plains	143	89	1.0	5.4 [0.1] 5.7 [0.4] 6.0 [0.4] 6.6 [0.1]	1 [0.33] 2 [0.34] 3 [0.33]	Yes
C04	Combination Zone	143	89	NA	5.4 [0.1] 5.7 [0.4] 6.0 [0.4] 6.6 [0.1]	1 [0.33] 2 [0.34] 4 [0.33]	Yes
40	Meers Fault	268	166	0.70	5.4 [0.1] 6.0 [0.4] 6.6 [0.4] 7.5 [0.1]	1 [0.33] 2 [0.34] 4 [0.33]	~~No~~NA - replaced RCOL2_02.05.02-16 S02

CP COL 2.5(1)

Table 2.5.2-203 (Sheet 1 of 2)
Summary of Dames & Moore Seismic Source Zones

Source	Description	Distance[a] (km)	Distance[a] (mi)	Pa[b]	M_{max} (m_b) and Wts.[c]	Smoothing Options and Wts.[d]	Contributes to 99% of Hazard[e]
20	Southern Coastal Margin	134	83	1.0	5.3 [0.8] 7.2 [0.2]	1 [0.75] 2 [0.25]	Yes
25	Ouachitas Fold Belt	42	26	0.35	5.5 [0.8] 7.2 [0.2]	1 [0.75] 2 [0.25]	Yes
25a	Kink in Ouachita Fold Belt	121	75	0.65	5.7 [0.75] 7.2 [0.25]	3 [0.75] 4 [0.25]	Yes
28	S. Oklahoma Aulacogen	147	91	0.44	6.0 [0.75] 7.2 [0.25]	3 [0.75] 4 [0.25]	Yes
28b	Default for S. Oklahoma Aulacogen	113	70	0.56	5.0 [0.8] 7.2 [0.2]	1 [0.75] 2 [0.25]	Yes
67	New Mexico	0	0	1.0	5.5 [0.8] 7.2 [0.2]	1 [0.75] 2 [0.25]	Yes
C08	Combination Zone	42	26	NA	5.5 [0.8] 7.2 [0.2]	1 [0.75] 2 [0.25]	Yes
29	B-W-M Fault	160	100	0.31	6.0 [0.75] 7.2 [0.25]	3 [0.75] 4 [0.25]	No
30	A/W Uplift	170	110	0.42	6.0 [0.75] 7.2 [0.25]	3 [0.75] 4 [0.25]	No

RCOL2_02.05.02-16 S02

CP COL 2.5(1)

Table 2.5.2-203 (Sheet 2 of 2)
Summary of Dames & Moore Seismic Source Zones

Source	Description	Distance[a] (km)	Distance[a] (mi)	Pa[b]	M_{max} (m_b) and Wts.[c]	Smoothing Options and Wts.[d]	Contributes to 99% of Hazard[e]
32	Ardmore Basin	230	140	0.51	6.0 [0.75] 7.2 [0.25]	3 [0.75] 4 [0.25]	No
33	Anadarko Basin	266	165	1.0	5.8 [0.75] 7.2 [0.25]	1 [0.34] 2 [0.11] 3 [0.41] 4 [0.14]	No

RCOL2_02.05.02-16 S02

a) Shortest distance between CPNPP 3 & 4 and source zone.

b) Probability of activity (EPRI, 1989a).

c) Maximum earthquake magnitude (M_{max}) in body-wave magnitude (m_b) and weighting (Wts.) (EPRI 1989a).

d) Smoothing options (EPRI, 1989a):

1 = no smoothing on a, no smoothing on b, strong b prior of 1.04:

2 = no smoothing on a, no smoothing on b, weak b prior of 1.04;

3 = constant a, constant b, strong b prior of 1.04;

4 = constant a, constant b, weak b prior of 1.04;

Weights on magnitude intervals are [0.1, 0.2, 0.4, 1.0, 1.0, 1.0, 1.0].

e) Whether or not the source contributes to 99% of the hazard at CPSES Units 1 & 2.

CP COL 2.5(1)

Table 2.5.2-204
Summary of Law Engineering Seismic Source Zones

Source	Description	Distance[a] (km)	Distance[a] (mi)	Pa[b]	M_{max} (m_b) and Wts.[c]	Smoothing Options and Wts.[d]	Contributes to 99% of Hazard[e]
124	New Mexico –Texas Block	0	0	1.0	4.9 [0.3] 5.5 [0.5] 5.8 [0.2]	1a [1.0]	Yes
26	Oklahoma Aulacogen-Arbuckle Wichita Rift	150	93	0.6	5.0 [0.2] 5.2 [0.5 6.8 [0.3]	1a [1.0]	Yes
119	Eastern Mid-Continent	151	94	1.0	4.6 [0.3] 5.0 [0.3] 5.5 [0.4]	1a [1.0]	No
120	Western Mid-Continent	300	190	1.0	4.9 [0.5] 5.5 [0.5]	3a [1.0]	No
126	South Coastal Block	148	92	1.0	4.6 [0.9] 4.9 [0.1]	1a [1.0]	No

RCOL2_02.05.02-16 S02

a) Shortest distance between CPNPP 3 & 4 and source zone.

b) Probability of activity (EPRI, 1989a).

c) Maximum earthquake magnitude (M_{max}) in body-wave magnitude (m_b) and weighting (Wts.) (EPRI, 1989a).

d) Smoothing options (EPRI, 1989a):

1a = high smoothing on a, constant b, strong b prior of 1.05;

Weights on magnitude intervals are all 1.0.

e) Whether or not the source contributes to 99% of the hazard at CPSES Units 1 & 2.

CP COL 2.5(1)

Table 2.5.2-205
Summary of Rondout Associates Seismic Source Zones

Source	Description	Distance[a] (km)	Distance[a] (mi)	Pa[b]	M_{max} (m_b) and Wts.[c]	Smoothing Options and Wts.[d]	Contributes to 99% of Hazard[e]
16	S. Oklahoma Aulacogen-Ouachita Mts.	129	80	1.0	5.8 [0.15] 6.5 [0.60] 6.8 [0.25]	1 [1.0]	Yes
C02	Grenville Crust	0	0	NA	4.8 [0.2] 5.5 [0.6] 5.8 [0.2]	3 [1.0]	Yes
23	Nemaha-Anadark	~~235~~230	~~146~~140	1.0	6.6 [0.2] 6.8 [0.6] 7.0 [0.2]	~~2~~1 [1.0]	~~No~~Yes RCOL2_02.05.02-16 S02
51	Gulf Coast to Bahamas Fracture Zone	92	57	1.0	4.8 [0.2] 5.5 [0.6] 5.8 [0.2]	~~2~~3 [1.0]	~~No~~Yes RCOL2_02.05.02-16 S02
52	Pre-Grenville Precambrian Craton	290	180	1.0	4.8 [0.2] 5.5 [0.6] 5.8 [0.2]	3 [1.0]	No RCOL2_02.05.02-16 S02

a) Shortest distance between CPNPP 3 & 4 and source zone.

b) Probability of activity (EPRI, 1989a).

c) Maximum earthquake magnitude (M_{max}) in body-wave magnitude (m_b) and weighting (Wts.) (EPRI, 1989a).

d) Smoothing options (EPRI, 1989a):

1 = constant a of -1.590, constant b of 1.020

2 = constant a of -1.350, constant b of 0.960

3 = low smoothing on a, constant b, strong b prior of 1.0.

e) Whether or not the source contributes to 99% of the hazard at CPSES Units 1 & 2.

CP COL 2.5(1)

Table 2.5.2-206
Summary of Weston Geophysical Corporation Seismic Source Zones

Source	Description	Distance[a] (km)	Distance[a] (mi)	P*[b]	M_{max} (Em_b) and Wts.[c]	Smoothing Options and Wts.[d]	Contributes to 99% of Hazard[e]
109	Southwest	0	0	1.0	5.4 [0.33] 6.0 [0.49] 6.6 [0.18]	1a [0.2] 2a [0.8]	Yes
C31	Combination Zone	0	0	NA	5.4 [0.33] 6.0 [0.49] 6.6 [0.18]	1a [0.7] 2a [0.3]	Yes
36	Ancestral Rockies	137	85	1.0	5.4 [0.43] 6.0 [0.41] 6.6 [0.16]	1b [0.3] 2b [0.7]	Yes
107	Gulf Coast	128	79	1.0	5.4 [0.71] 6.0 [0.29]	1a [0.2] 2a [0.8]	~~No~~Yes RCOL2_02.05.02-16 S02
37	Delaware Basin	230	140	0.81	5.4 [0.33] 6.0 [0.49] 6.6 [0.18]	1b [0.3] 2b [0.7]	No RCOL2_02.05.02-16 S02

a) Shortest distance between CPNPP 3 & 4 and source zone.

b) Probability of activity for earthquakes with magnitudes greater than the minimum magnitude of mb 5.0 (EPRI, 1989a).

c) Maximum earthquake magnitude (M_{max}) in body-wave magnitude (m_b) and weighting (Wts.) (EPRI, 1989a).

d) Smoothing options (EPRI, 1989a):

1a = constant a, constant b, medium b prior of 1.0;

1b = constant a, constant b, medium b prior of 0.9;

2a = medium smoothing on a, medium smoothing on b, medium b prior of 1.0.

2b = medium smoothing on a, medium smoothing on b, medium b prior of 0.9.

e) Whether or not the source contributes to 99% of the hazard at CPSES Units 1 & 2.

CP COL 2.5(1)

Table 2.5.2-207 (Sheet 1 of 2)
Summary of Woodward-Clyde Consultants Seismic Source Zones

Source	Description	Distance[a] (km)	Distance[a] (mi)	P*[b]	M_{max} (m_b) and Wts.[c]	Smoothing Options and Wts.[d]	Contributes to 99% of Hazard[e]
BG44	Central US Backgrounds	0	0	NA	4.9 [0.17] 5.4 [0.28] 5.8 [0.27] 6.5 [0.28]	1 [0.25] 6 [0.25] 7 [0.25] 8 [0.25]	Yes
46	S. Oklahoma Aulacogen	161	100	0.083~~3~~4	5.7 [0.33] 6.8 [0.34] 7.2 [0.33]	3 [0.33] 4 [0.34] 5 [0.33]	Yes
46a	S. Oklahoma Aulacogen	161	100	0.084~~4~~3	5.7 [0.33] 6.8 [0.34] 7.2 [0.33]	3 [0.33] 4 [0.34] 5 [0.33]	Yes
49	Meers Fault	262	163	0.85	6.8 [0.33] 7.3 [0.34] 7.5 [0.33]	~~9~~2± [1.0]	~~No~~NA - replaced
52	E. Oklahoma Seismic Zone	238	148	0.4	5.4 [0.33] 6.0 [0.34] 6.5 [0.33]	3 [0.33] 4 [0.34] 5 [0.33]	No

RCOL2_02.05.02-16 S02

RCOL2_02.05.02-16 S02

RCOL2_02.05.02-16 S02

CP COL 2.5(1)

Table 2.5.2-207 (Sheet 2 of 2)
Summary of Woodward-Clyde Consultants Seismic Source Zones

Source	Description	Distance[a] (km)	Distance[a] (mi)	P*[b]	M_{max} (m_b) and Wts.[c]	Smoothing Options and Wts.[d]	Contributes to 99% of Hazard[e]
48	S. Oklahoma Gravity Anomaly	211	131	0.263	5.7 [0.33] 6.5 [0.34] 7.1 [0.33]	3 [0.33] 4 [0.34] 5 [0.33]	~~No~~Yes

RCOL2_02.05.02-16 S02

a) Shortest distance between CPNPP 3 & 4 and source zone.

b) Probability of activity for earthquakes with magnitudes greater than the minimum magnitude of mb 5.0 (EPRI, 1989a).

c) Maximum earthquake magnitude (M_{max}) in body-wave magnitude (m_b) and weighting (Wts.) (EPRI, 1989a).

d) Smoothing options (EPRI, 1989a):

1 = low smoothing on a, high smoothing on b, no b prior;
3 = high smoothing on a, high smoothing on b, moderate b prior of 1.0.
4 = high smoothing on a, high smoothing on b, moderate b prior of 0.9.
5 = high smoothing on a, high smoothing on b, moderate b prior of 0.8.
6 = low smoothing on a, high smoothing on b, moderate b prior of 1.0;
7 = low smoothing on a, high smoothing on b, moderate b prior of 0.9;
8 = low smoothing on a, high smoothing on b, moderate b prior of 0.8;
9 = use “a” and “b” from homogeneous solution for source zone 46 with smoothing option 4.
Weights on magnitude intervals are all 1.0.

e) Whether or not the source contributes to 99% of the hazard at CPSES Units 1 & 2.

CP COL 2.5(1)

RCOL2_02.05.02-16 S02

Table 2.5.2-210
Mmax Update for ~~Dames & Moore South Coastal Margin~~EPRI Team Sources

Team	Source Zone	Original Mmax Distribution and Weights (EPRI, 1989)	Updated Mmax Distribution and Weights
Bechtel	Background (BZI)	5.4 [0.1] 5.7 [0.4] 6.0 [0.4] 6.6 [0.1]	6.1 [0.1] 6.4 [0.4] 6.6 [0.5]
Dames & Moore	South Coastal Margin (zone 20)	5.3 [0.8] 7.2 [0.2]	5.5 [0.8] 7.2 [0.2]
Law Engineering	New Mexico-Texas Block (zone 124)	4.9 [0.3] 5.5 [0.5] 5.8 [0.2]	5.0 [0.3] 5.5 [0.5] 5.8 [0.2]
Law Engineering	South Coastal Block (zone 126)	4.6 [0.9] 4.9 [0.1]	5.5 [0.9] 5.7 [0.1]
Rondout	Gulf Coast to Bahamas Fracture zone (zone 51)	4.8 [0.2] 5.5 [0.6] 5.8 [0.2]	6.1 [0.3] 6.3 [0.55] 6.5 [0.15]
Weston	Gulf Coast (zone 107)	5.4 [0.71] 6.0 [0.29]	6.6 [0.89] 7.2 [0.11]

Table 2.5.2-233
Amplification Factors for the FIRS3 Site Column

	Amplification Factor for 10^{-4}		Amplification Factor for 10^{-5}		Amplification Factor for 10^{-6}		
Freq (Hz)	Median	Logarithmic Std. Dev.	Median	Logarithmic Std. Dev.	Median	Logarithmic Std. Dev.	
0.1	~~1.12~~1.09	~~0.08~~0.07	~~1.12~~1.09	~~0.08~~0.07	~~1.12~~1.09	~~0.08~~0.07	RCOL2_02.05.02-16 S01
0.125	~~1.14~~1.13	~~0.11~~0.10	~~1.14~~1.13	~~0.11~~0.10	~~1.14~~1.13	~~0.11~~0.10	
0.15	~~1.18~~1.17	0.14	~~1.18~~1.17	0.14	~~1.18~~1.17	0.14	
0.2	~~1.27~~1.26	0.19	~~1.27~~1.26	0.19	~~1.27~~1.26	0.19	
0.3	1.39	0.19	1.39	0.19	1.39	0.19	
0.4	1.39	0.16	1.39	0.16	1.39	0.16	
0.5	1.37	0.17	1.36	~~0.18~~0.17	1.36	~~0.18~~0.17	
0.6	1.35	0.16	1.35	0.16	1.35	~~0.17~~0.16	
0.7	1.35	0.13	1.35	0.13	1.36	0.13	
0.8	1.40	~~0.12~~0.11	1.40	~~0.12~~0.11	1.40	~~0.12~~0.11	
0.9	1.44	0.12	~~1.44~~1.43	0.12	1.43	0.12	
1	1.46	0.14	1.41	0.13	1.41	0.13	
1.25	1.60	0.20	~~1.60~~1.61	0.20	1.60	0.20	
1.5	1.78	0.18	1.78	0.18	~~1.78~~1.77	0.18	
2	~~1.66~~1.65	0.15	1.66	0.15	1.66	0.15	RCOL2_02.05.02-16 S02
2.5	~~1.37~~1.35	~~0.22~~0.23	~~1.35~~1.34	~~0.20~~0.21	1.34	0.20	
3	~~1.13~~1.10	~~0.21~~0.22	~~1.12~~1.11	~~0.20~~0.21	1.10	0.21	
4	~~0.89~~0.84	~~0.16~~0.18	~~0.87~~0.85	0.17	0.85	0.17	
5	~~0.84~~0.80	~~0.18~~0.21	~~0.83~~0.81	~~0.18~~0.20	~~0.79~~0.80	0.20	RCOL2_02.05.02-16 S02
6	~~0.84~~0.79	~~0.20~~0.23	~~0.83~~0.80	~~0.21~~0.22	0.79	0.23	
7	~~0.82~~0.77	~~0.25~~0.29	~~0.80~~0.77	~~0.26~~0.28	~~0.75~~0.76	~~0.30~~0.29	
8	~~0.80~~0.74	~~0.28~~0.33	~~0.77~~0.75	~~0.30~~0.32	0.72	0.34	
9	~~0.83~~0.76	~~0.32~~0.37	~~0.79~~0.77	~~0.35~~0.37	0.74	0.39	
10	~~0.88~~0.81	~~0.33~~0.38	~~0.84~~0.82	~~0.36~~0.38	0.79	~~0.41~~0.40	
12.5	~~0.94~~0.88	~~0.29~~0.35	~~0.90~~0.88	~~0.33~~0.35	0.86	~~0.38~~0.37	
15	~~0.81~~0.74	~~0.30~~0.36	~~0.76~~0.72	~~0.34~~0.37	0.69	0.41	
20	~~0.68~~0.57	~~0.25~~0.33	~~0.59~~0.55	~~0.31~~0.35	0.51	0.40	
25	~~0.59~~0.46	~~0.19~~0.26	~~0.48~~0.42	~~0.24~~0.28	0.37	0.33	
30	~~0.55~~0.41	~~0.16~~0.22	~~0.43~~0.37	~~0.19~~0.23	0.32	0.27	
35	~~0.53~~0.40	~~0.16~~0.21	~~0.43~~0.37	~~0.18~~0.22	0.31	~~0.26~~0.25	
40	~~0.54~~0.41	~~0.15~~0.20	~~0.43~~0.38	~~0.18~~0.21	0.31	~~0.25~~0.24	
45	~~0.55~~0.42	~~0.15~~0.20	~~0.45~~0.39	~~0.17~~0.20	0.32	0.23	
50	~~0.57~~0.44	~~0.14~~0.19	~~0.47~~0.41	~~0.16~~0.19	0.34	0.22	RCOL2_02.05.02-16 S02
60	~~0.65~~0.50	~~0.13~~0.18	~~0.55~~0.48	~~0.15~~0.17	~~0.39~~0.40	0.20	
70	~~0.77~~0.60	~~0.13~~0.17	~~0.67~~0.59	~~0.14~~0.17	~~0.47~~0.49	~~0.20~~0.19	
80	~~0.91~~0.71	~~0.13~~0.17	~~0.80~~0.71	~~0.14~~0.16	~~0.57~~0.59	0.19	
90	~~1.03~~0.82	~~0.13~~0.16	~~0.92~~0.83	~~0.14~~0.16	~~0.66~~0.69	0.19	
100	~~1.12~~0.89	~~0.12~~0.16	~~1.01~~0.92	~~0.14~~0.16	~~0.73~~0.77	0.19	

Table 2.5.2-236
1E-5 and GMRS Amplitudes for GMRS Elevation, Horizontal and Vertical

Horizontal and vertical amplitudes for GMRS elevation		
Frequency	**1E-5 UHRS**	**GMRS**
100	~~7.43E-02~~8.26E-02	~~3.34E-02~~3.72-E-02
90	~~7.48E-02~~8.33E-02	~~3.37E-02~~3.75E-02
80	~~7.54E-02~~8.42E-02	~~3.39E-02~~3.79E-02
75	~~7.57E-02~~8.46E-02	~~3.41E-02~~3.81E-02
70	~~7.61E-02~~8.51E-02	~~3.42E-02~~3.83E-02
60	~~7.68E-02~~8.62E-02	~~3.46E-02~~3.88E-02
50	~~7.78E-02~~8.76E-02	~~3.50E-02~~3.94E-02
40	~~7.89E-02~~8.92E-02	~~3.55E-02~~4.01E-02
30	~~8.04E-02~~9.14E-02	~~3.62E-02~~4.11E-02
25	~~8.14E-02~~9.28E-02	~~3.66E-02~~4.18E-02
20	~~8.53E-02~~9.74E-02	~~3.84E-02~~4.38E-02
15	~~9.05E-02~~1.04-E01	~~4.07E-02~~4.66E-02
12.5	~~9.40E-02~~1.08E-01	~~4.23E-02~~4.85E-02
10	~~9.85E-02~~1.13E-01	~~4.43E-02~~5.09E-02
9	~~9.99E-02~~1.14E-01	~~4.49E-02~~5.14E-02
8	~~1.01E-01~~1.16E-01	~~4.57E-02~~5.20E-02
7.5	~~1.02E-01~~1.16E-01	~~4.61E-02~~5.23E-02
7	~~1.03E-01~~1.17E-01	~~4.65E-02~~5.27E-02
6	~~1.05E-01~~1.19E-01	~~4.74E-02~~5.35E-02
5	~~1.08E-01~~1.21E-01	~~4.86E-02~~5.45E-02
4	~~1.31E-01~~1.42E-01	~~5.91E-02~~6.39E-02
3	~~1.51E-01~~1.58E-01	~~6.78E-02~~7.13E-02
2.5	~~1.55E-01~~1.62E-01	~~6.98E-02~~7.29E-02
2	~~1.55E-01~~1.54E-01	~~6.99E-02~~7.13E-02
1.8	~~1.54E-01~~1.50E-01	~~6.92E-02~~6.75E-02
1.5	~~1.43E-01~~1.36E-01	~~6.42E-02~~6.14E-02
1.25	~~1.28E-01~~1.20E-01	~~5.76E-02~~5.41E-02
1	~~1.09E-01~~1.00E-01	~~4.91E-02~~4.50E-02
0.9	~~1.08E-01~~9.65E-02	~~4.86E-02~~4.34E-02
0.8	~~1.07E-01~~9.27E-02	~~4.80E-02~~4.17E-02
0.7	~~1.05E-01~~8.85E-02	~~4.74E-02~~3.98E-02
0.6	~~1.04E-01~~8.40E-02	~~4.67E-02~~3.78E-02
0.5	~~1.02E-01~~7.89E-02	~~4.59E-02~~3.55E-02
0.4	~~8.16E-02~~6.31E-02	~~3.67E-02~~2.84E-02
0.3	~~6.12E-02~~4.73E-02	~~2.75E-02~~2.13E-02
0.2	~~4.08E-02~~3.16E-02	~~1.84E-02~~1.42E-02
0.15	~~3.06E-02~~2.37E-02	~~1.38E-02~~1.07E-02
0.125	~~2.55E-02~~1.97E-02	~~1.15E-02~~8.88E-03
0.1	~~1.63E-02~~1.58E-02	~~7.34E-03~~7.10E-03

RCOL2_02.05.02-16 S01

RCOL2_02.05.02-16 S02

RCOL2_02.05.02-16 S02

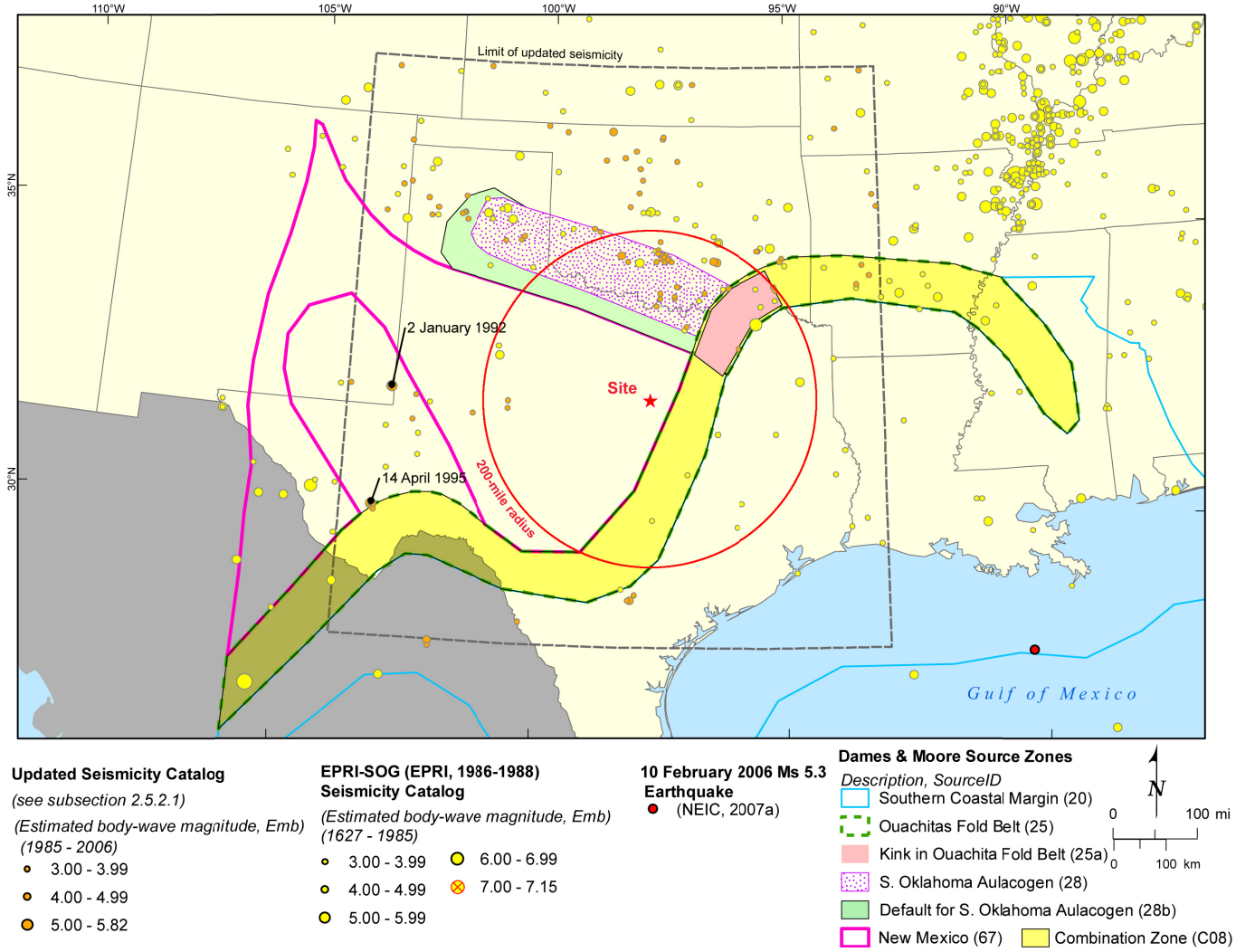

Figure 2.5.2-204 Dames & Moore Contributing EPRI Seismic Source Zones

RCOL2_02.05.02-16 S02

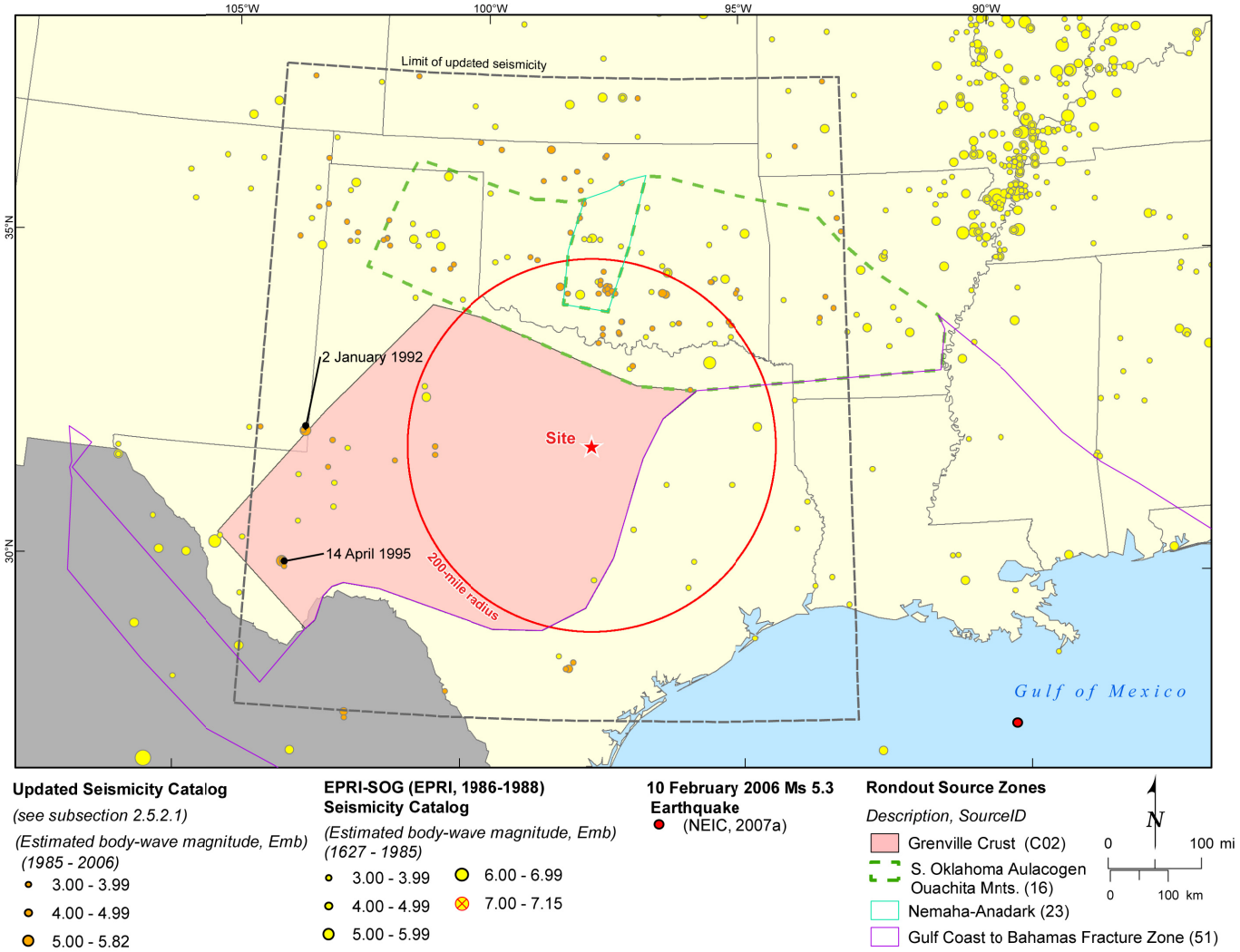

Figure 2.5.2-206 Rondout Associates Contributing EPRI Seismic Source Zones

RCOL2_02.05.02-16 S02

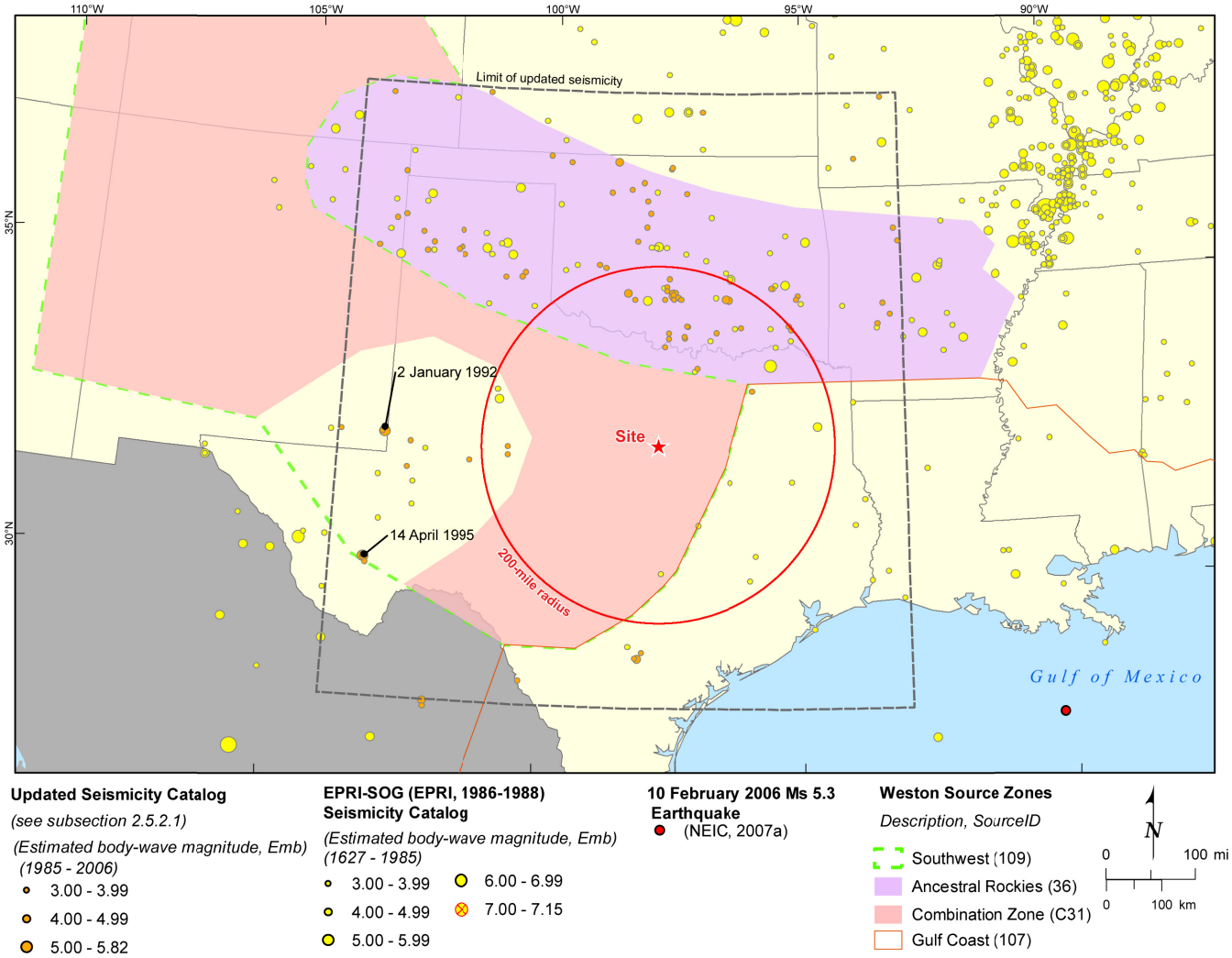

Figure 2.5.2-207 Weston Geophysical Contributing EPRI Seismic Source Zones

RCOL2_02.05.02-16 S02

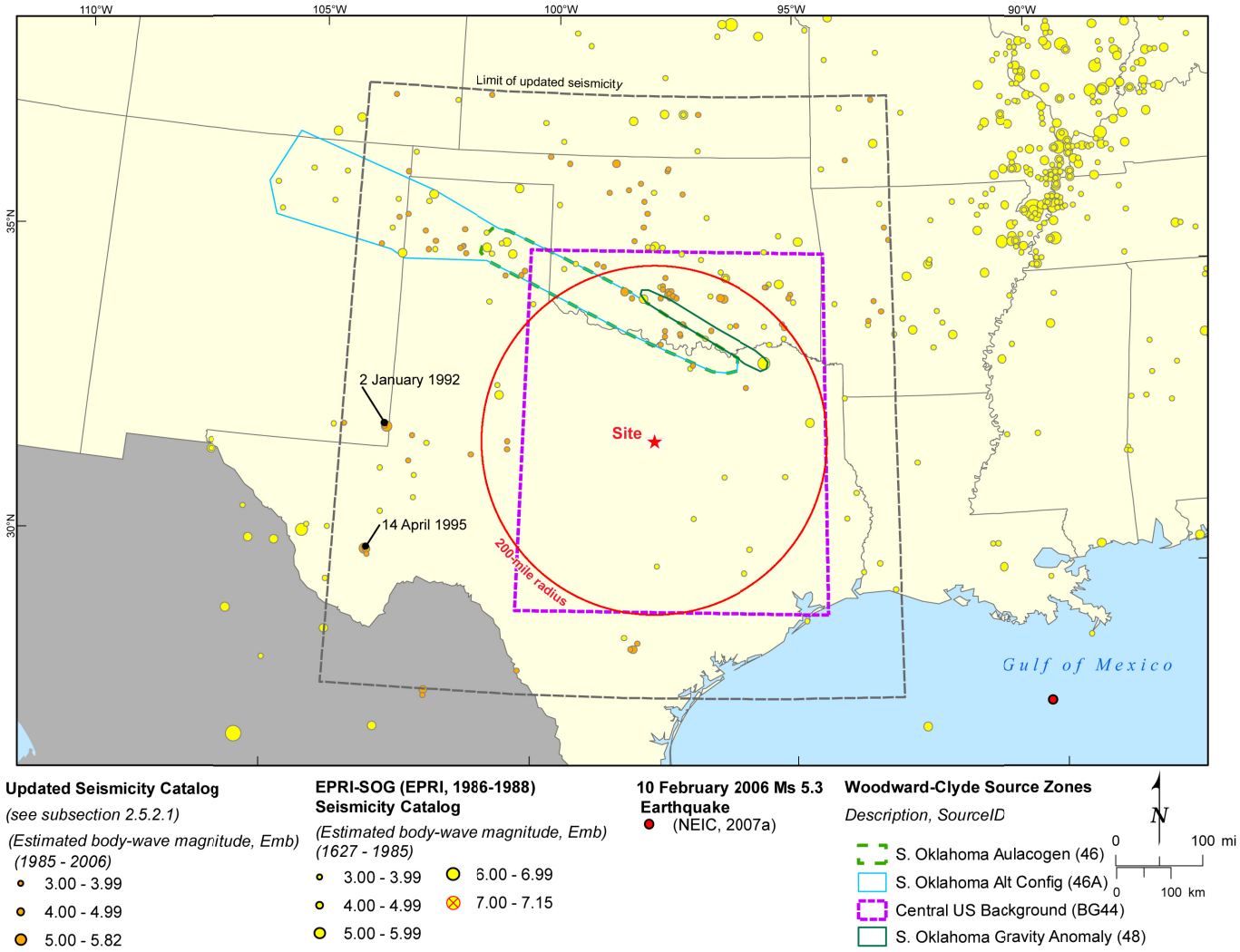

Figure 2.5.2-208 Woodward-Clyde Contributing EPRI Seismic Source Zones

Attachment 2

Supplemental Response to Request for Additional Information No. 3698 (CP RAI #109)

SUPPLEMENTAL RESPONSE TO REQUEST FOR ADDITIONAL INFORMATION

Comanche Peak, Units 3 and 4

Luminant Generation Company LLC

Docket Nos. 52-034 and 52-035

RAI NO.: 3698 (CP RAI #109)

SRP SECTION: 09.02.01 - Station Service Water System

QUESTIONS for Balance of Plant Branch 1 (AP1000/EPR Projects) (SBPA)

DATE OF RAI ISSUE: 10/2/2009

QUESTION NO.: 09.02.01-5

This Request for Additional Information (RAI) is necessary for the staff to determine if the application meets the requirements discussed in Regulatory Guide 1.206 as they will appear in section II.E.3 of the appendix to 10 CFR Part 52 which specifies the approved design this application references, once the design is approved.

Regulatory Guide (RG) 1.206, "Combined License Applications for Nuclear Power Plants," Section C.III.4, "Combined License Action or Information Items," states in part that Appendices A–D to 10 CFR Part 52 set forth the design certification rules that specify the NRC's requirements for the certified reactor designs. An applicant may depart from or omit these items, provided that the departure or omission is identified and justified in the FSAR.

US-APWR Design Certification Document (DCD) COL 9.5(2) specifies that the COL applicant should address the design and fire protection aspects of the facilities, buildings and equipments, such as cooling towers and a fire protection water supply system, which are site specific and/or are not a standard feature of the US-APWR. FSAR Section 9.2.1.3, "Safety Evaluation," provides a new paragraph to replace DCD Section 9.2.1.3 that describes the ESWS as a backup source of water for fire protection service system (FSS) hoses stations in the RB and ESWP house. This is considered a new function of the ESWS that is a change from the DCD design for all four trains of ESWS. The NRC staff considers this new function to be a departure from the US-APWR standard plant design described in the DCD. The applicant is requested to identify this additional function as a departure and provide the evaluation of this departure using the 10 CFR Part 52 criteria.

- Provide a revision to the COL FSAR identifying the cooling water system has been modified to accommodate FSS to the RB and to the ESWS pump house as a departure and provide an evaluation using the applicable criteria of 10 CFR Part 52.

- FSAR Figure 9.2.1-1R, "Essential Service Water System Piping and Instrumentation Diagram," does not graphically show that these normally locked closed (LC) valves are connected to FSS hose stations. Revise FSAR to correctly show a hose or flange connection downstream of the LC valves.

SUPPLEMENTAL INFORMATION:

In response to this question in letter TXNB-09071 submitted on November 20, 2009 (ML093280698), Luminant committed to revise FSAR Figure 9.5.1-201 to show the fire protection water supply system (FSS) interface with the essential service water system. The updated figure is attached. In addition, Notes 2 and 3 on Figure 9.2.1-1R (Sheet 1 of 2) have been revised to cross-reference new Figure 9.5.1-201 Sheet 2.

Impact on R-COLA

See attached marked-up FSAR Revision 1 Figures 9.2.1-1R (Sheet 1 of 2), 9.5.1-201 (Sheet 1 of 2), and 9.5.1-201 (Sheet 2 of 2)

Impact on S-COLA

None.

Impact on DCD

None.

MAP-00-201

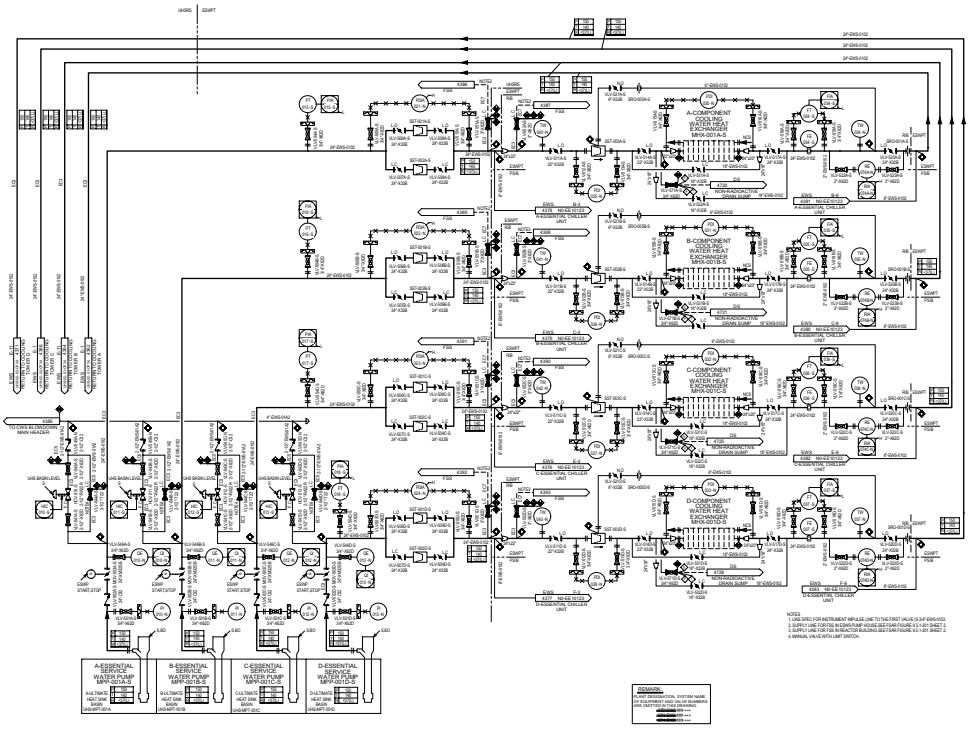

RCOL2_09.02.01-5 S01

CP COL 9.2(7)

Figure 9.2.1-1R Essential Service Water System Piping and Instrumentation Diagram (Sheet 1 of 2)

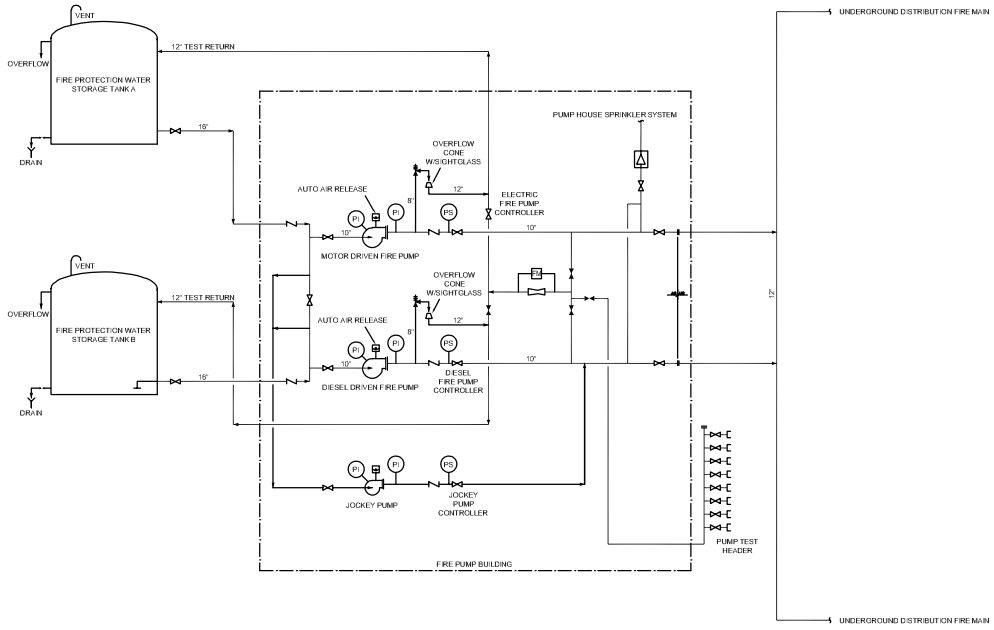

CP COL 9.5(2) **Figure 9.5.1-201 Fire Protection Water Supply System (Sheet 1 of 2)** RCOL2_09.02.01-5 S01

RCOL2_09.02.01-5 S01

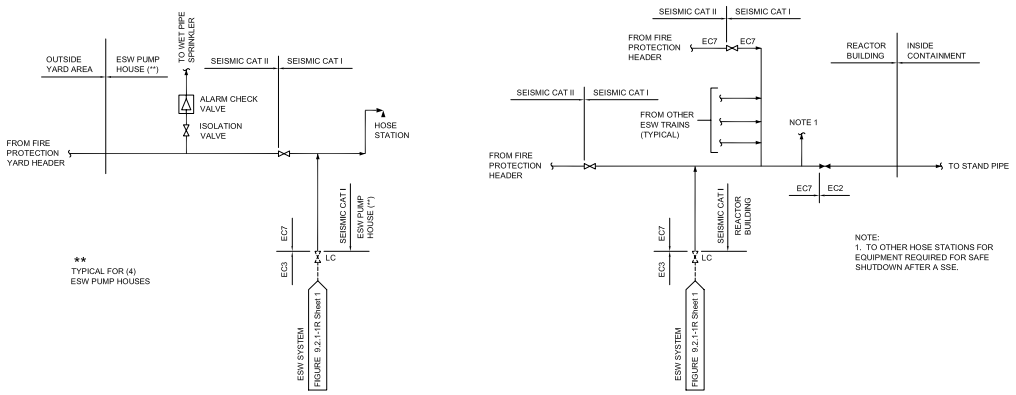

CP COL 9.5(2)

Figure 9.5.1-201 Fire Protection Water Supply System (Sheet 2 of 2)